UNITED STATES PATENT AND TRADEMARK OFFICE

COMMISSIONER FOR PATENTS
UNITED STATES PATENT AND TRADEMARK OFFICE
P.O. BOX 1450
ALEXANDRIA, VA 22313-1450
www.uspto.gov

Paper No. 34

Donald E. Stout (For Patent Owner)
Antonelli, Terry, Stout & Kraus
Suite 1800
1300 N. 17th Street
Arlington, VA 22209

Enclosure: Copy of Requester Petition filed May 6, 2003

David L. Stewart (For Requester)
ALLEN DYER DOPPELT MILBRATH
& GILCHRIST, P.A.
Suite 1401
Orlando, FL 32802

MAILED
JUN 0 6 2003
REEXAM UNIT

Enclosures: Request papers deposited December 26, 2002

In re Campana, Jr. et al. Request For Reexamination Proceeding For: U.S. Patent No. 5,479,472 Deposited[1]: April 17, 2003	DECISION DENYING PETITION

This is a decision on the May 6, 2003, third party requestor petition under 37 CFR 1.181 for(1) withdrawal of the notice of April 22, 2003,[2] as improper since jurisdiction is proper, (2) waiver of 37 CFR 1.535(g) and 1.560 to thus permit requestor to participate in a reexamination under 35 U.S.C. 301-307, (3) an order of a Director Initiated Reexamination under 35 U.S.C. 313, and (4) deferral of the effective date for an election required by the April 22, 2003, Notice. The petition is before the Director of the Office of Patent Legal Administration for decision.

---

[1] The request papers are stated as having been "deposited," as opposed to "filed," since no filing date has been assigned to the papers.

[2] The April 22, 2003, notice informed requester that the present patent for which *inter partes* reexamination was requested was not eligible for *inter partes* reexamination pursuant to Section 4608 of the American Inventor's Protection Act.

For the reasons set forth below, the petition is denied. In addition, the request papers are being returned to the requester, and the reexamination filing fee submitted with the request papers will be refunded to requester.

REVIEW OF FACTS

1. U.S. Patent No. 5,479,472 (hereinafter, the '472 patent), issued to Campana, Jr. et al., on December 26, 1995, from an application filed on May 20, 1991.

2. On April 17, 2003, the present request for *inter partes* reexamination was deposited in the Office by the third party requester.

3. On April 22, 2003, a notice was issued informing requester that the present patent for which *inter partes* reexamination was requested was not eligible for *inter partes* reexamination (pursuant to Section 4608 of the American Inventor's Protection Act). The notice set a two week period for requester to elect to replace the *inter partes* request for reexamination with an *ex parte* request for reexamination under 37 CFR 1.510, pointing out that if such an election was not received within the two week period, the request papers would be returned to requester.

4. On May 6, 2003, requester filed the instant petition requesting (1) withdrawal of the notice as improper, (2) waiver of 37 CFR 1.535(g) and 1.560 to permit requestor participation in a reexamination under 35 U.S.C. 301-307, (3) a Director Initiated Reexamination under 35 U.S.C. 313, and (4) deferral of the effective date for an election required by the notice.

DECISION

The petition sets forth, at page 1, a request for four types of relief using the conjunction "and" which would appear to indicate that all four types of relief are requested together (i.e., additive grounds). It is, however, clear from the remainder of the petition that the four types of relief requested by petitioner are alternative grounds of relief, and each will be addressed below, in turn, to the extent appropriate.

I. "[W]ithdrawal of the notice of April 22, 2003 as improper since jurisdiction is proper."

The reexamination statute was amended on November 29, 1999, by the 1999 American Inventors Protection Act (AIPA), Public Law 106-113, to expand reexamination by providing an "*inter partes*" option. [3] Section 4608 (effective date) of the AIPA provides:

> "(a) In General. – ... this subtitle and the amendments made by this subtitle shall take effect on the date of the enactment of this Act [November 29, 1999] and shall apply to any patent that issues from an original application filed in the United States on or after that date [November 29, 1999]." [emphasis added]

As was pointed out in the April 22, 2003, notice, the application for the patent for which the present reexamination was requested was filed prior to November 29, 1999 (the date of enactment of the AIPA), and, accordingly, the instant patent is not eligible for *inter partes* reexamination.

At pages 4-7 of the present petition, legislative history is presented and discussed with respect to circumstances surrounding the providing of *inter partes* reexamination in the enactment of the AIPA. These circumstances do not change the fact that the legislation was enacted by Congress, and it was signed into law by the President of the United States of America. In addition, while legislative history is useful in interpreting statutory language where the language of the statute is open to interpretation, in the present instance, the plain language of the statute is clear and not ambiguous. The enacted "subtitle and the amendments" made thereby are clearly stated (in Section 4608) to apply "to any patent that issues from an original application filed in the United States on or after" the date of enactment (November 29, 1999). The application for the patent for which the present reexamination was requested was filed prior to that date, and thus is not eligible for *inter partes* reexamination, pursuant to the *clear language* of the statute.

At page 2 of the petition, it is argued that Congress reconsidered Section 4608 of the AIPA, and repealed it "by implication" by way of "at least sections 13106 and 13202 of

---

[3] See Title IV, subtitle F (§§ 4601 through 4608) of the "Intellectual Property and Communications Omnibus Reform Act of 1999," S. 1948 (106th Cong. 1st Sess. (1999)) - Enacted as part of Pub. L. 106-113, 113 Stat. 1501, 1501A-552 through 1501A-591 (1999).

Public Law 107-273 [4] "[Footnote for the enactment added].

In response, note that Section 13106 of P.L. 107-273 is directed solely to *appeals* in *inter partes* reexamination and expands third party requester rights of appeal in an *inter partes* reexamination proceeding. Further, Section 13202 is directed solely to *appeals* in *ex parte* reexamination and makes statutory technical corrections with respect to same. Neither of Sections 13106 and 13202, nor any other provision of P.L. 107-273, is directed to expanding the eligibility of the pool of patents eligible for *inter partes* reexamination.

Petitioner asserts in the petition that Congress passed the AIPA legislation in haste and did not "substantively consider Section 4608." At page 7 of the petition, applicant states:

> "[W]hen the Justice Department Reauthorization Act was considered, since 4608 was not part of Title 35, it is not likely that Congress was anymore aware at the time of the passage in the Justice Department Reauthorization Act, that there were any limitations on the Inter Partes Reexamination practice by virtue of the date on which a patent issued. As a result, Congress granted, in sections 13106 and 13201 of the Justice Department Reauthorization Act a plenary right of appeal to any third party Inter Partes Reexamination requestor apparently under the assumption that participation rights were a given."

With respect to this point, it is to be noted that Congress had ample time to consider and reconsider Section 4608 of the AIPA, before passing H.R. 2215 (the underlying legislation incorporated as part of Title III, Subtitle A (Patent and Trademark Office) of Public Law 107-273), and its precursor bills. Yet H.R. 2215 did not revise the *inter partes* reexamination eligibility provision, while it did, at the same time, revise other reexamination effective date provisions. This shows a clear intent on the part of Congress to retain the *inter partes* reexamination eligibility provision of Section 4608 of the AIPA as-is, i.e., as it was enacted.

It is further to be noted that revision the *inter partes* reexamination eligibility provision was explicitly placed before Congress by way of Section 3(a) of H.R. 2231 introduced by Congressman Lofgren on June 19, 2001, [5] and referred to the House

---

[4] See the 21st Century Department of Justice Appropriations Authorization Act, TITLE III- INTELLECTUAL PROPERTY, Subtitle A - the "Patent and Trademark Office Authorization Act of 2002" - Enacted as part of Pub. L. 107-273, 116 Stat. 1758, 1899-1906 (2002).

[5] 107th CONGRESS, 1st Session

committee.[6] Yet it was not carried forward in H.R. 2215 which was incorporated into Public Law 107-273. Congress could have chosen to carry forward the substance of Section 3(a) of H.R. 2231, but declined to do so.

In view of the above, the April 22, 2003, notice, is deemed proper, and it will not be withdrawn. The first item of relief requested is accordingly denied.

II. "[W]aiver of 37 C.F.R 1.535(g) and 1.560 to permit Requestor to participate in Reexamination under 35 U.S.C. 301-307."

At pages 9-10 of the petition, requester urges that, if it elects to convert the request deposited April 17, 2003, to a request for *ex parte* reexamination, 37 CFR 1.535 and 1.560 should be waived pursuant to 37 CFR 1.183 to permit requester to participate in the reexamination proceeding. At page 15 of the petition, it is requested that *ex parte* reexamination procedure be "expanded by waver of 37 C.F.R 1.535 and 1.560." This is in effect a petition under 37 CFR 1.183 for waiver of the rules (though it was submitted as a "request").

37 CFR 1.4(c) provides that "each distinct subject, inquiry or order must be contained in a separate paper to avoid confusion and delay in answering papers dealing with different subjects." [Emphasis added]

The present request for a waiver of the rules is a distinct "subject" and/or "inquiry," and should have been provided in the form of a separate petition paper under 37 CFR 1.183, accompanied by the petition fee set forth in 37 CFR 1.17(h). Petitioner did not provide the separate petition paper, and did not provide the required petition fee. Accordingly, the issue is not ripe for a decision, and will not be decided herein.

It is, however, pointed out to petitioner that relief by way of a waiver of the rules cannot be provided in this instance, because third party requester participation in an *ex parte* reexamination is barred by statute, and the statute cannot be waived. Neither the rules nor any provision of the statute provide authority for a third party requester of a reexamination proceeding requested under 35 U.S.C. 302 to file a paper directed to the issues of the reexamination proceeding. *In re Amp*, 212 USPQ 826 (Comr. Pats. 1981). The statute and its intent are clear that a reexamination

---

[6] This bill was co-sponsored by Congressman Coble, who introduced the H.R. 1886 *inter partes* reexamination appeal provision which ultimately became Section 13106 of P.L. 107-273 which petitioner advances at page 2 of the petition.

proceeding requested under 35 U.S.C. 302 must be *ex parte*. *Syntex (U.S.A.) Inc. v. U.S. Patent and Trademark Office*, 11 USPQ2d 1866, 1869 (Fed. Cir. 1989) (third parties do not participate before the USPTO).

III. "[T]hat the Patent and Trademark Office order a Director Initiated Reexamination under 35 U.S.C. 313."

At page 15 of the petition, it is stated:

> "If neither of the previous requests for relief a granted, Requestor specifically requests that the Director of the Patent and Trademark Office initiate Inter Partes Reexamination under 35 U.S.C. 313 and allow Requestor to participate."

The present request for a Director Initiated Reexamination must be made via a petition under 37 CFR 1.182, since it is for "a question not specifically provided for." While 37 CFR 1.520 provides that the Director may order a reexamination at his initiative, even where a reexamination has not been requested under 37 CFR 1.510 or 1.913, 37 CFR 1.520 does not provide for a member of the public to request that the Director order reexamination at his own initiative. Further, 37 CFR 1.520 does not provide for a Director Initiated ***Inter Partes*** Reexamination, and there is no 1.900-series rule that does so. Thus, the present request for a Director Initiated Reexamination is clearly for relief "not specifically provided for in the regulations of this part," and such a request must be made via a petition under 37 CFR 1.182.

As noted above, 37 CFR 1.4(c) provides that each distinct subject, inquiry or order must be contained in a <u>separate paper</u>. The present request for a Director Initiated Reexamination is a distinct "subject" and/or "inquiry," and it should have been provided in the form of a <u>separate</u> petition paper under 37 CFR 1.182, accompanied by the petition fee set forth in 37 CFR 1.17(h). Petitioner did not provide the separate petition paper, and did not provide the required petition fee. Accordingly, the issue is not ripe for a decision, and will not be decided herein.

It is, however, pointed out to petitioner that relief by way of a Director Initiated ***Inter Partes*** Reexamination is not statutorily available to requester. The reference to a Director Initiated Reexamination in 35 U.S.C. 312(a) was explicitly deleted in a technical correction made by Section 13202(a)(2) of Public Law 107-273 (the 21st Century Department of Justice Appropriations

Authorization Act, enacted November 2, 2002).[7]

Accordingly, the reference to "section 312(a)" made in 35 U.S.C. 313 does not include a Director Initiated Reexamination for *inter partes* reexamination.

IV. "[D]eferral of the effective date for an election required by the Notice."

At page 15 of the petition, it is stated:

> "The Patents Special Projects Advisor indicated that Requestor must elect whether to pursue Inter Partes Reexamination or elect to convert the Inter Partes Request to an Ex Parte Request by the due date. Since that election cannot be reasonably be made without knowing the outcome of Patent and Trademark Office consideration of his petition and since Requestor has made a contingent election, Requestor requests that the requirement of the Patents Special Projects Advisor be held in abeyance until decision on this Petition is received by Requestor."

The request for a deferral of the effective date for the election required by the Notice must be made via a petition under 37 CFR 1.182, since it is for "a question not specifically provided for." Once again, petitioner has not provided a separate petition paper, nor the required petition fee. Accordingly, the issue is not ripe for a decision. The following is however pointed out to petitioner:

The third party requester has the option to initiate an *ex parte* reexamination of the instant patent by filing a new request for *ex parte* reexamination. Such a filing would not prejudice requestor, as compared to having the present reexamination papers converted at a future time as is requested in the petition. Requester would not be prejudiced because there is no negative consequence that would result from having a later filing date for a reexamination proceeding. Further, the filing fee that accompanied the present request papers is being returned in its entirety, so, requester

---

[7] The revision made to 35 U.S.C. 312(a) by P.L. 107-273 is shown as follows in strike-out/underline format:

REEXAMINATION.— Not later than 3 months after the filing of a request for inter partes reexamination under section 311, the Director shall determine whether a substantial new question of patentability affecting any claim of the patent concerned is raised by the request, with or without consideration of other patents or printed publications. ~~On the Director's initiative, and at any time, the Director may determine whether a substantial new question of patentability is raised by patents and publications.~~ The existence of a substantial new question of patentability is not precluded by the fact that a patent or printed publication was previously cited by or to the Office or considered by the Office.

does not lose any filing fee applied. Thus, the relief requested by petitioner could be obtained via a different avenue, and there would be no ground for granting a petition under 37 CFR 1.182, even if such had been properly filed.

RETURN OF PAPERS

The notice to requester of April 22, 2003 stated, as its last paragraph:

> "The *inter partes* reexamination 'request' papers are being temporarily held in the CRU pending a decision as to whether or not requester wants to replace the *inter partes* request for reexamination with an ex parte request for reexamination under 37 CFR 1.510. **If such decision is NOT received within two (2) weeks from the mailing date of this letter, the request papers will be returned to the requester."**

The instant petition was filed within the two week period; however, an election was not made in the petition.

At page 9 of the petition, a "Conditional Election" is stated as follows:

> "...if the Inter Partes Request for Reexamination of eight NTP patents is not granted, applicants elect to convert those Inter Partes Reexamination requests to ex parte requests, provided that the provisions of 37 C.F.R. 1.535 (g) and 1.560 are waived to permit requestor participation." [Emphasis added]

A waiver of 37 CFR 1.535(g) and 1.560 has not been granted in this decision; thus, the stated conditional election does not take effect.

In addition, the requested deferral of the effective date for an election required by the April 22, 2003, Notice has not been granted. Accordingly, the request papers are being **returned** with this decision.

The petition, and the present decision on the petition will be made of record in the patent file.

LACK OF SERVICE

The requisite proof of service (a Certificate of Service) on the patent owner was not included with the instant petition papers. Pursuant to 37 CFR 1.903

> "... any document filed by either the patent owner or the third party requester must be served on every other party in the reexamination proceeding in the manner provided in § 1.248. Any document must reflect service or the document may be refused consideration by the Office. The failure of the patent owner or the third party requester to serve documents may result in their being refused consideration."

Accordingly, the requester's petition is deficient for failure to reflect service of the response on the patent owner in accordance with 37 CFR 1.903.

Since the requisite proof of service on patent owner has not been included, a copy of the petition is being provided to the patent owner with this decision.

REFUND OF REEXAMINATION FILING FEE

The present deposit of an *inter partes* reexamination was made in error for the reasons set forth above. Pursuant to 35 U.S.C. § 42(d), "[t]he Director may refund any fee paid by mistake...." Accordingly, **a refund** of the $8,800 reexamination filing fee will be made to requester in due course by return of the check that was submitted with the request.

THIRD PARTY REQUESTER'S RECOURSE

In the event that the third party requester desires to initiate an *ex parte* reexamination of the instant patent, requester may wish to consider filing a new request for *ex parte* reexamination. Such a filing should include a specific identification of each substantial new question of patentability based on the cited patents and printed publications, as well as a detailed explanation of the pertinency and manner of applying the patents and publications to every claim for which reexamination is requested.

CONCLUSION

1. The third party requestor petition filed May 6, 2003, pursuant to 37 CFR 1.181, is denied.

2. The request papers deposited April 17, 2003, are being returned to the requester with this decision.

3. The requestor petition filed May 6, 2003, and this decision will be made of record in the patent file.

4. A refund of the $8,800 reexamination filing fee will be made to requester by return of the check that was submitted with the request papers.

5. A copy of the requester petition filed May 6, 2003, is being sent to the patent owner, along with this decision.

6. Telephone inquiries with regard to this decision should be directed to Kenneth M. Schor, Senior Legal Advisor, at 703-308-6710.

Robert J. Spar
Director
Office of Patent Legal Administration
Office of the Deputy Commissioner
for Patent Examination Policy

June 3, 2003
C:\kiva\kenpet4\ip\5479472n.ip

UNITED STATES PATENT AND TRADEMARK OFFICE

COMMISSIONER FOR PATENTS
UNITED STATES PATENT AND TRADEMARK OFFICE
P.O. BOX 1450
ALEXANDRIA, VA 22313-1450
www.uspto.go

Paper No. 35

Donald E. Stout
ANTONELLI, TERRY, STOUT & KRAUS
Suite 1800
1300 North 17th Street
Arlington, VA 22209

(For Patent Owner)

MAILED
JUN 12 2003
REEXAM UNIT

David L. Stewart
ALLEN, DYER, DOPPELT, MILBRATH
& GILCHRIST, P.A.
255 South Orange Avenue
Suite 1401
Orlando, FL 32802

(For Requester)

In re Campana, Jr. et al.
Request for *Inter Partes* Reexamination Proceeding
For: U.S. Patent No. 5,479,472
Deposited[1]: April 17, 2003

: **SUPPLEMENTAL**
: **DECISION**
: **DENYING**
: **PETITION**

This is a supplemental decision to the decision mailed on June 6, 2003, on the third party requester's petition of May 6, 2003. The June 6, 2003, decision denied the third party requester petition under 37 C.F.R. § 1.181 for (l) withdrawal of the notice of April 22, 2003,[2] as improper

[1] The request papers are stated as having been "deposited, " as opposed to "filed," since no filing date has been assigned to the papers.

[2] The April 22, 2003, notice informed requester that the present patent for which *inter partes* reexamination was requested was not eligible for *inter partes* reexamination pursuant to Section 4608 of the American Inventor's Protection Act.

since jurisdiction is proper, (2) waiver of 37 C.F.R. § 1.535(g) and § 1.560 to thus permit requester to participate in a reexamination under 35 U.S.C. 301-307, (3) an order of a Director Initiated Reexamination under 35 U.S.C. 313, and (4) deferral of the effective date for an election required by the Notice of April 22, 2003. This matter is before the Director of the Office of Patent Legal Administration for clarification.

For the reasons set forth in the decision of June 6, 2003, the petition was denied. In addition, the decision stated that the "request papers" and the reexamination filing fee submitted with the request papers were returned to the requester. This supplemental decision clarifies what was returned as the "request papers."

REVIEW OF FACTS

1. U.S. Patent No. 5,479,472 (hereinafter, the '472 patent), issued to Campana, Jr. et al., on December 26, 1995, from an application filed on May 20, 1991.

2. On April 17, 2003, a request for *inter partes* reexamination was deposited in the Office by the third party requester. The deposited request comprised "request papers" which include a statement that reexamination is requested, a table of contents (of the prior art references), a reference to the filing fee, and a copy of the '472 patent. In addition, the request included two boxes containing the copies of the references cited in the request, as well as claim charts interspersed therewith.

3. A notice was mailed on April 22, 2003, informing requester that the present patent for which *inter partes* reexamination was requested is **not eligible** for *inter partes* reexamination (pursuant to Section 4608 of the American Inventor's Protection Act). The notice set a two week period for requester to elect to replace the *inter partes* request for reexamination with an *ex parte* request for reexamination under 37 C.F.R. § 1.510, pointing out that if such an election was not received within the two week period, the request papers would be returned to requester.

4. On May 6, 2003, requester filed a petition requesting (1) withdrawal of the notice as improper, (2) waiver of 37 C.F.R. § 1.535(g) and § 1.560 to permit requester participation in a reexamination under 35 U.S.C. 301-307, (3) a Director Initiated Reexamination under 35 U.S.C. 313, and (4) deferral of the effective date for an election required by the notice.

5. A decision denying the petition was mailed on June 6, 2003[3].

[3] The address portion of the decision of June 6, 2003, inadvertently indicated that the enclosures sent to requester were request papers deposited December 26, 2002. The body of the decision, however, correctly states in the Conclusion on page 10 that the request papers being returned to requester were deposited on April 17, 2003.

CLARIFICATION RE: RETURN OF PAPERS

The Notice to requester mailed on April 22, 2003, stated in its' last paragraph:

> "The *inter partes* reexamination 'request' papers are being temporarily held in the CRU pending a decision as to whether or not requester wants to replace the *inter partes* request for reexamination with an *ex parte* request for reexamination under 37 C.F.R. § 1.510. **If such decision is NOT received within two (2) weeks from the mailing date of this letter, the request papers will be returned to the requester**."

The petition of May 6, 2003, was filed within the two week period, however, an election was not made in the petition. In addition, the requested deferral of the effective date for an election required by the Notice of April 22, 2003, was not granted. Accordingly, the reexamination request was returned with the decision mailed June 6, 2003.

This supplemental decision clarifies that only the "request papers" were in fact returned with the June 6, 2003, decision; the boxes containing *inter alia* the references were not returned. The request papers which were returned include a statement that reexamination is requested, a table of contents (of the prior art references), a reference made as to the filing fee, and a copy of the '472 patent. The two boxes containing the copies of references cited in the request, as well as the claim chart interspersed therewith, were **not** returned **due to their voluminous nature**.

The boxes of reference copies which accompanied the request for *inter partes* reexamination are being temporarily held in the Central Reexamination Unit (CRU). If the third party requester desires a return of the boxes, then requester should promptly make arrangements to pick up such boxes from the CRU **within one month** of the mailing date of this supplemental decision. Requester should immediately notify Marsha Twitty of the CRU, at telephone number (703) 308-9692, of any arrangements that have been made to pick up such boxes. If the boxes are **not** picked up **within one month** of the mailing date of this supplemental decision, **the CRU may dispose of such boxes.**

The petition, the previous petition decision and the present supplemental decision denying the petition will be made of record in the patent file.

THIRD PARTY REQUESTER'S RECOURSE

As indicated in the previous petition decision, in the event that the third party requester desires to initiate an *ex parte* reexamination of the instant patent, requester may wish to consider filing a new request for *ex parte* reexamination pursuant to 37 C.F.R. § 1.510.

In this regard, note that the **mailing address** for the U.S. Patent & Trademark Office has **changed, as of May 1, 2003.**

All new **requests for an *ex parte* reexamination proceeding** should be directed:

by Mail to: Mail Stop *Ex Parte* Reexam
Central Reexamination Unit
Office of Patent Legal Administration
United States Patent & Trademark Office
P.O. Box 1450
Alexandria, VA 22313-1450

All correspondence relating to an *inter partes* reexamination proceeding (a new request may not be submitted by FAX) should be directed:

by Mail to: Mail Stop *Inter Partes* Reexam
Central Reexamination Unit
Office of Patent Legal Administration
United States Patent & Trademark Office
P.O. Box 1450
Alexandria, VA 22313-1450

by FAX to: (703) 305-1013
Central Reexamination Unit

By hand: Central Reexamination Unit
Crystal Plaza Three-Four, 3D68
2201 South Clark Place
Arlington, VA 22202

CONCLUSION

1. The third party requester petition filed May 6, 2003, pursuant to 37 C.F.R. § 1.181, was denied in a decision mailed on June 6, 2003, and the present decision is supplemental to that decision.

2. The request for *inter partes* reexamination deposited April 17, 2003, was returned to the requester with the petition decision of June 6, 2003. The return of the request included a refund of the $8,800 reexamination filing fee by return of the check that was submitted with the request and marked void.

3. The boxes of reference copies (including the claim chart interspersed with the reference copies) were not returned with the decision mailed on June 6, 2003, and the boxes are being temporarily stored in the CRU.

4. If the third party requester desires a return of the boxes, then requester should promptly make arrangements to pick up such boxes from the CRU **within one month** of the mailing date of this supplemental decision.

5. If the boxes are **not** picked up **within one month** of the mailing date of this supplemental decision, then the CRU **may dispose of such boxes**.

6. This decision will be made of record in the patent file, to accompany the petition and the June 6, 2003, decision.

7. Telephone inquiries with regard to this decision should be directed to Lynn M. Kryza, Patent Special Projects Advisor, at (703) 308-0255 or Kenneth Schor, Senior Legal Advisor, at (703) 308-6710. Telephone inquiries with regard to making arrangements for picking up the boxes of references presently stored in the CRU should be directed to Marsha Twitty at (703) 308-9692.

Robert J. Spar 6/12/03

Robert J. Spar
Director
Office of Patent Legal Administration
Office of the Deputy Commissioner
for Patent Examination Policy

UNITED STATES PATENT AND TRADEMARK OFFICE

COMMISSIONER FOR PATENTS
UNITED STATES PATENT AND TRADEMARK OFFICE
P.O BOX 1450
ALEXANDRIA, VA 22313-1450
www.uspto.gov

Paper No. 35

Donald E. Stout (For Patent Owner)
Antonelli, Terry, Stout & Kraus
Suite 1800
1300 N. 17th Street
Arlington, VA 22209

Enclosure: Copy of Requester Petition filed July 31, 2003

David L. Stewart (For Requester)
ALLEN DYER DOPPELT MILBRATH
& GILCHRIST, P.A.
Suite 1401
Orlando, FL 32802

MAILED
NOV 25 2003
REEXAM UNIT

Enclosure: Reexamination request papers deposited April 17, 2003

In re Campana, Jr. et al. Request For Reexamination Proceeding For: U.S. Patent No. 5,479,472 Deposited[1]: April 17, 2003	DECISION DENYING PETITION

This is a decision on the July 31, 2003, third party requestor petition titled "Petition to the Under Secretary of Commerce for Intellectual Property and Director of the United States Patent and Trademark Office, in Person, from a Decision of the Director of the Office of Patent Legal Administration under 37 C.F.R. § 1.181."

The petition is **granted** to the extent that the June 6, 2003, and June 12, 2003, decisions of the Director of the Office of Patent Legal Administration (OPLA) have been reviewed by a higher level official within the United States Patent and Trademark Office (Office), but is **denied** as to overturning the decision by the Director of OPLA.

[1] The request papers are stated as having been "deposited," as opposed to "filed," since no filing date has been assigned to the papers.

REVIEW OF FACTS

1. U.S. Patent No. 5,479,472 (hereinafter, the '472 patent), issued to Campana, Jr. et al., on December 26, 1995, from an application filed on May 20, 1991.

2. On April 17, 2003, the present request for *inter partes* reexamination was deposited in the Office by the third party requester.

3. On April 22, 2003, a notice was issued informing requester that the present patent for which *inter partes* reexamination was requested was not eligible for *inter partes* reexamination (pursuant to Section 4608 of the American Inventor's Protection Act). The notice set a two week period for requester to elect to replace the *inter partes* request for reexamination with an *ex parte* request for reexamination under 37 CFR 1.510, pointing out that if such an election was not received within the two week period, the request papers would be returned to requester.

4. On May 6, 2003, the requester filed a petition under 37 CFR 1.181, requesting (1) withdrawal of the notice as improper, (2) waiver of 37 CFR 1.535(g) and 1.560 to permit requestor participation in a reexamination under 35 U.S.C. 301-307, (3) a Director Initiated Reexamination under 35 U.S.C. 313, and (4) deferral of the effective date for an election required by the notice.

5. A decision of the Director of OPLA was mailed on June 6, 2003, and supplemented on June 12, 2003, in which the requestor petition under 37 CFR 1.181 filed May 6, 2003, was denied,[2] and for return of the deposited request papers to the requester.

6. On June 24, 2003, the requester filed a request for an ***ex parte*** reexamination of the '472 patent, which was assigned control number 90/006,677.

7. On July 31, 2003, the requester filed the present petition under 37 CFR 1.181, for review of the decision of the Director of OPLA.

---

[2] Some of the issues raised in the May 6th petition were found not to be ripe for decision, and were not decided.

8. Also on July 31, 2003, the requester filed a petition under 37 CFR 1.183 requesting waiver of 37 CFR §§ 1.535, 1.550(g) and 1.560, to permit third party requester participation in the examination stage of the 90/006,677 *ex parte* reexamination proceeding.

REQUEST FOR PERSONAL REVIEW BY THE DIRECTOR

The petition is addressed to the Director of the United States Patent and Trademark Office (the Director). It is inappropriate and not feasible for the Director to personally review all papers requesting relief that are directed to him; such personal review is not a matter of right and lies within the sound discretion of the Director. *See Corrigan v. v. Alexeevsky, et al.*, 200 USPQ 368(Comr. Pat. 1978), *In re Staeger*, 189 USPQ 284 (Comr. Pat. 1974) The Director will not review a decision in person except in unusual or exceptional circumstances. *See Id.* In the present instance, the petition does not present unusual and exceptional circumstances that would justify the requested "In Person" review by the Director. Inasmuch as the authority for deciding petitions from a Decision of the Director of OPLA has been delegated to the Deputy Commissioner for Patent Examination Policy, the instant petition has been forwarded to the Deputy Commissioner for Patent Examination Policy for treatment as a petition under 37 CFR 1.181(a)(3) requesting review of the decision of the Director of OPLA by a higher level Office official.

DECISION

1. In his June 6, 2003, decision, the Director of OPLA found that the instant patent is not eligible for *inter partes* reexamination, and thus, the deposited papers requesting an *inter partes* reexamination of instant patent are to be returned to the requester. The present petition takes issue with, and seeks review of, that finding. As pointed out in the June 6th decision:

The reexamination statute was amended on November 29, 1999, by the 1999 American Inventors Protection Act (AIPA), Public Law 106-113, to expand reexamination by providing an "*inter partes*" option. [3] Section 4608 (effective date) of the AIPA provides:

---

[3] See Title IV, subtitle F (§§ 4601 through 4608) of the "Intellectual Property and Communications Omnibus Reform Act of 1999," S. 1948 (106th Cong. 1st Sess. (1999)) - Enacted as part of Pub. L. 106-113, 113 Stat. 1501,

> "(a) In General. — ... this subtitle and the amendments made by this subtitle shall take effect on the date of the enactment of this Act [November 29, 1999] and shall apply to any patent that issues from an original application filed in the United States on or after that date [November 29, 1999]." [emphasis added]

The application for the instant patent was filed prior to November 29, 1999 (the date of enactment of the AIPA), and, accordingly, the instant patent is not eligible for *inter partes* reexamination.

2. At page 4 of the petition, it is argued that:

> "the position taken in the decision(s) by the Director of the Office of Patent Legal Administration with respect to Section 4608 prohibits the PTO from declaring, in an Inter Partes proceeding, claims from a parent application to be unpatentable even though they are not patentably distinct from claims in a continuing application [filed on or after November 29, 1999]. In the Requests for Inter Partes Reexamination under consideration in this petition, the PTO has accepted Inter Partes Reexamination status for U.S. Patent No. 6,317,592, even though the claims of many of the above-identified applications are acknowledged as patentably not distinct by the filing of a Terminal Disclaimer."

In response, it is initially to be observed that while the claims from a parent application filed prior to November 29, 1999 cannot be declared "to be unpatentable" in an *inter partes* reexamination proceeding, petitioner is free to file a request for an *ex parte* reexamination proceeding (and has done so) in an effort to have such claims of the parent declared unpatentable. To the extent that petitioner is pointing out that it does not appear consistent to bar *inter partes* reexamination for a parent patent, while such is permitted for a continuation having patentably indistinct claims, this is simply the result mandated by the effective date provision (section 4608) of the *inter partes* reexamination provisions of the AIPA. It is not within the authority of the Office to permit an *inter partes* reexamination for the instant patent, since the effective date provision (section 4608) of the *inter partes* reexamination provisions of the AIPA does not make the *inter partes* reexamination provisions of the AIPA applicable to a patent resulting from an application filed before November 29, 1999, simply because that patent contains one or more claims which are not patentably distinct from a patent resulting from an application filed on or after

---

1501A-552 through 1501A-591 (1999).

November 29, 1999, (and to which the *inter partes* reexamination provisions of the AIPA would apply).

3. At page 4 of the petition, it is pointed out that:

> "the position taken in the decision(s) by the Director of the Office of Patent Legal Administration with respect to Section 4608 effectively guts the applicability of Inter Partes Reexamination by limiting its applicability to only 3.9% of patents.... Given the legislative history, described somewhat below, it would require an extraordinary leap to assume that a majority of both houses of Congress intended Inter Partes Reexamination to apply to only 3.9% of issued patents."

As to the "legislative history," page 5 of the petition then presents comments directed to circumstances surrounding the providing of *inter partes* reexamination in the enactment of the AIPA, and as to the viability of using the *inter partes* reexamination process.

In addressing petitioner's argument of Congressional intent and legislative history, the following is to be noted:

Regardless of the circumstances of enactment and comments on viability of the enacted process, the legislation was enacted by Congress, and it was signed into law by the President of the United States of America. While legislative history may useful in interpreting statutory language where the language of the statute is open to interpretation, in the present instance, the plain language of the statute is clear and not ambiguous. The enacted "subtitle and the amendments" made thereby are clearly stated (in Section 4608) to apply "to any patent that issues from an original application filed in the United States on or after" the date of enactment (November 29, 1999). The application for the instant patent, for which the *inter partes* reexamination is requested, was filed prior to that date; thus, the patent is not eligible for *inter partes* reexamination, pursuant to the *clear language* of the statute.

It is further noted that Congress had ample time to consider and reconsider Section 4608 of the AIPA, before passing H.R. 2215 (the underlying legislation incorporated as part of Title III, Subtitle A (Patent and Trademark Office) of Public Law 107-273), and its precursor bills. Yet H.R. 2215 did not revise the *inter partes* reexamination eligibility provision, while it did, at the same time, revise other reexamination effective date provisions. This shows a clear intent on the part of Congress to retain the

inter partes reexamination eligibility provision of Section 4608 of the AIPA as-is, i.e., as it was enacted.

4. At pages 7-8 of the petition, a Constitutionality issue is raised. Petitioner argues that:

> "The Decision by the Director of the Office of Patent Legal Administration that the Patent and Trademark Office does not have authority under Section 4608 of the AIPA to accept the above-identified Requests for Inter Partes Reexamination is constitutionally questionable....Issuing a patent that is invalid based on prior art is an unconstitutional act because it gives exclusive rights to individuals who are not "inventors" in a Constitutional sense. Since issuing a patent that is invalid based on prior art is unconstitutional, the PTO has inherent authority to declare such issuance invalid and improper without the need for any authorizing legislation. Section 4608 may be unconstitutional to the extent it purports to limit an Executive Branch Agency (the PTO) in correcting its own unconstitutional acts."

Petitioner then[4] requests that the Office:

> "utilize its inherent Constitutional Authority to ignore 4608 and accept the above-described Requests for Inter Partes Reexamination. Petitioner respectfully requests that the PTO hold Section 4608 of the AIPA to be unconstitutional and accept the above-described Requests for Inter Partes Reexamination.

Petitioner appears to be arguing that the Section 4608 *inter partes* reexamination effective date provision is unwise and should not be adhered to, and that Article I, § 8, cl. 8 of the U.S. Constitution ("Congress shall have the power...[t]o promote the progress of science and useful arts, by securing for limited times to authors and inventors the exclusive right to their respective writings and discoveries") provides a basis for the Office to ignore the limitations in the AIPA on the applicability of *inter partes* reexamination. It is brought to petitioner's attention that the Constitution grants Congress the authority to legislate on the subject of patents; it does not provide that there be must a patent office (or a United States Patent and Trademark Office), much less vest the Office with any inherent authority to act or correct its acts. Thus, whatever authority the Office possesses to examine applications, grant patents, or reexamine previously granted patents must be found in the Office's enabling legislation (title 35 U.S.C.). Put simply, the Constitution does not provide the Office with the inherent

---

[4] Petition at page 8.

authority to correct its "mistakes;" rather the Office's authority to correct such "mistakes" is limited to that authority provided to it in title 35, U.S.C. (i.e., 35 U.S.C. chapters 25, 30, and 31). It is further noted that the Federal courts have generally held that the power of Congress to legislate on the subject of patents is plenary by the terms of the Constitution. *See e.g., McClurg v. Kingsland*, 42 U.S. (1 How.) 202, 206 (1843); *see also Owen v. Heimann*, 12 F.2d 173, 174 (D.C. Cir.), cert. denied, 271 U.S. 685 (1926) ("Congress has full power to prescribe to whom and upon what terms and conditions a patent shall issue"); *Kling v. Haring*, 11 F.2d 202, 204-05 (D.C. Cir.), *cert. denied*, 271 U.S. 671 (1926) (same). In any event, administrative agencies do not have the authority to declare unconstitutional the laws they are charged with administering. *See, e.g., Oestereich v. Selective Service Board*, 393 U.S. 233, 242 (1968); *McGowan v. Marshall*, 604 F.2d 885, 892 (5th Cir. 1979); and *Buckeye Industries, Inc. v. Secretary of Labor*, 587 F.2d 231 (5th Cir. 1979).

5. At pages 5-7 of the petition, it is argued that the Section 4608 *inter partes* reexamination effective date provision of the AIPA has been repealed by implication, based upon the legislative expansion of third party requester appeal rights provided by Public Law 107-273. [5] At page 6 of the petition, sections 13106 and 13202 of Public Law 107-273 [6] are relied upon to show that the "broad scope of the right to appeal appears to repeal by implication" the Section 4608 effective date provision.

In response, Congress is well versed in the mechanism for changing an effective date of prior legislation (as it did in Public Law 107-273 for the eighteen-month publication provisions of the AIPA), and Congress did not do so for the *inter partes* reexamination effective date provisions of the AIPA. It is to be noted that a provision for revision of the *inter partes* reexamination eligibility effective date was explicitly placed before Congress by way of Section 3(a) of H.R. 2231 introduced on June 19, 2001 and referred to the House committee. *See* H.R. 2231, 107th Cong., 1st Sess. (2001). This explicit provision to revise the *inter partes* reexamination eligibility effective date was before Congress; yet, it was *not carried forward* into Public

---

[5] The 21st Century Department of Justice Appropriations Authorization Act, enacted on November 2, 2002. *See* Pub. L. 107-273, 116 Stat. 1758, 1899-1906 (2002)

[6] TITLE III- INTELLECTUAL PROPERTY, Subtitle A - the "Patent and Trademark Office Authorization Act of 2002."

Law 107-273.

As to sections 13106 and 13202 of Public Law 107-273 that are relied upon by petitioner:

Section 13106 of P.L. 107-273 is directed solely to *appeals* in *inter partes* reexamination and expands third party requester rights of appeal in an *inter partes* reexamination proceeding. Section 13202 is directed solely to *appeals* in *ex parte* reexamination and makes statutory technical corrections with respect to same. Neither of Sections 13106 and 13202, nor any other provision of P.L. 107-273, is directed to expanding the pool of patents eligible for *inter partes* reexamination.

THE ULTIMATE HOLDING OF THE DIRECTOR OF OPLA IN THE PROCEEDING

In this instance, the Director of the OPLA found that the instant patent is not statutorily eligible for *inter partes* reexamination, and accordingly, the deposited request papers would be returned to the requester. In the present decision, based upon a plenary review of the record, it has been determined that an *inter partes* reexamination for the present patent is barred by statute, for the reasons set forth above. Accordingly, there is no reversible error and no basis for disturbing the OPLA Director's decisions of June 6, 2003, and June 12, 2003, to return the *inter partes* reexamination request papers. Thus, the present petition is **denied** as to the petition to reverse the decision of the OPLA Director.

WAIVER OF THE RULES TO PERMIT REQUESTOR PARTICIPATION IN *EX PARTE* REEXAMINATION PROCEEDING

As pointed out above the requester filed, on June 24, 2003, a request for ***ex parte*** reexamination of the instant patent (under 35 U.S.C. 302). Beginning at page 8 of the present petition, a discussion is provided as to why requester should be granted a waiver of 37 CFR §§ 1.535, 1.550(g) and 1.560 to permit requestor to participate in the *ex parte* reexamination proceeding that would be conducted, if that reexamination request is granted.[7] This discussion as to the question of waiver is being addressed in a concurrently issued decision on requester's July 31, 2003, petition under 37 CFR 1.183 requesting waiver of 37 CFR §§ 1.535,

[7] Reexamination was subsequently ordered for the proceeding.

1.550(g) and 1.560.[8] Accordingly, the matter is not further addressed herein.

RETURN OF THE REQUEST PAPERS

In the OPLA Director's supplemental decision of June 12, 2003, it was stated that the request for *inter partes* reexamination of the present patent deposited April 17, 2003, was returned to the requester with the petition decision of June 6, 2003, and a refund of the $8,800 reexamination filing fee.[9] It was further stated that the boxes of reference copies were not returned, and such boxes were being temporarily stored in the Central Reexamination Unit (CRU), and the third party requester was given one month to make arrangements to pick up such boxes from the CRU.

At page 13 of the petition, however, it is pointed out that:

> "[a]lthough the decisions of May 6, 2003 stated that the Requests for Inter Partes Reexamination were returned with the decisions, in fact, no such Requests were received with the decisions. Accordingly, Petitioners respectfully request that the above-identified Request for Inter Partes Reexamination continue to be retained by the PTO pending a decision on this Petition."

A review of the patent file and the boxes reveals that the original request papers were indeed not returned to the requester. Accordingly, the request papers deposited April 17, 2003, are being <u>returned</u> to the requester with this decision.

It is noted that petitioner requested [10] that the request papers deposited April 17, 2003, "continue to be retained by the PTO pending a final decision on all issues raised by this Petition." The instant decision is such a final decision, as set forth below.

LACK OF SERVICE

---

[8] That petition seeks to permit third party requester participation in the examination stage of the *ex parte* reexamination proceeding.

[9] The refund was effected by return of the check that was submitted with the request and marked void.

[10] Petition at page 14.

The requisite proof of service on the patent owner (a Certificate of Service) was not included with the instant petition papers. Pursuant to 37 CFR 1.903:

> "... any document filed by either the patent owner or the third party requester must be served on every other party in the reexamination proceeding in the manner provided in § 1.248. Any document must reflect service or the document may be refused consideration by the Office. The failure of the patent owner or the third party requester to serve documents may result in their being refused consideration."

Accordingly, the requester's petition is deficient for failure to reflect service of the response on the patent owner in accordance with 37 CFR 1.903.

Since the requisite proof of service on patent owner has not been included, a copy of the petition is being provided to the patent owner with this decision.

CONCLUSION

1. The present petition under 37 CFR 1.181(a)(3) is **granted** to the extent that the June 6, 2003, and June 12, 2003, decisions of the Director of the OPLA have been reviewed, but is **denied** as to overturning the decision by the Director of the OPLA.

2. The petition and this decision will be made of record <u>in the patent file</u>.

3. A copy of the petition is being sent to the patent owner, along with this decision.

4. The request papers deposited April 17, 2003, are being returned to the requester with this decision.

5. No further reconsideration or review of this matter will be undertaken by way of petition.

6. This decision may be viewed as a **final agency action** within the meaning of 5 U.S.C. 704, for purposes of seeking judicial review. See MPEP 1002.02.

7. Telephone inquiries with regard to this decision should be directed to Kenneth M. Schor, Senior Legal Advisor, Office of Patent Legal Administration, at 703-308-6710.

Stephen G. Kunin
Deputy Commissioner for
Patent Examination Policy

November 12, 2003
C:\kiva\kenpet4\ip\5479472.rcn

09702938.112503

UNITED STATES PATENT AND TRADEMARK OFFICE

COMMISSIONER FOR PATENTS
UNITED STATES PATENT AND TRADEMARK OFFICE
P.O. BOX 1450
ALEXANDRIA, VA 22313-1450
www.uspto.gov

Paper No. 36

Donald E. Stout (For Patent Owner)
Antonelli, Terry, Stout & Kraus
Suite 1800
1300 N. 17th Street
Arlington, VA 22209

Enclosure: Copy of Requester Petition filed May 6, 2003

MAILED
JUN 0 6 2003
REEXAM UNIT

David L. Stewart (For Requester)
ALLEN DYER DOPPELT MILBRATH
& GILCHRIST, P.A.
Suite 1401
Orlando, FL 32802

Enclosures: Request papers deposited December 26, 2002

In re Campana, Jr. et al. Request For Reexamination Proceeding For: U.S. Patent No. 5,436,960 Deposited[1]: April 17, 2003	DECISION DENYING PETITION

This is a decision on the May 6, 2003, third party requestor petition under 37 CFR 1.181 for(1) withdrawal of the notice of April 22, 2003,[2] as improper since jurisdiction is proper, (2) waiver of 37 CFR 1.535(g) and 1.560 to thus permit requestor to participate in a reexamination under 35 U.S.C. 301-307, (3) an order of a Director Initiated Reexamination under 35 U.S.C. 313, and (4) deferral of the effective date for an election required by the April 22, 2003, Notice. The petition is before the Director of the Office of Patent Legal Administration for decision.

[1] The request papers are stated as having been "deposited," as opposed to "filed," since no filing date has been assigned to the papers.

[2] The April 22, 2003, notice informed requester that the present patent for which *inter partes* reexamination was requested was not eligible for *inter partes* reexamination pursuant to Section 4608 of the American Inventor's Protection Act.

For the reasons set forth below, the petition is denied. In addition, the request papers are being returned to the requester, and the reexamination filing fee submitted with the request papers will be refunded to requester.

REVIEW OF FACTS

1. U.S. Patent No. 5,436,960 (hereinafter, the '960 patent), issued to Campana, Jr. et al., on July 25, 1995, from an application filed on May 20, 1991.

2. On April 17, 2003, the present request for *inter partes* reexamination was deposited in the Office by the third party requester.

3. On April 22, 2003, a notice was issued informing requester that the present patent for which *inter partes* reexamination was requested was not eligible for *inter partes* reexamination (pursuant to Section 4608 of the American Inventor's Protection Act). The notice set a two week period for requester to elect to replace the *inter partes* request for reexamination with an *ex parte* request for reexamination under 37 CFR 1.510, pointing out that if such an election was not received within the two week period, the request papers would be returned to requester.

4. On May 6, 2003, requester filed the instant petition requesting (1) withdrawal of the notice as improper, (2) waiver of 37 CFR 1.535(g) and 1.560 to permit requestor participation in a reexamination under 35 U.S.C. 301-307, (3) a Director Initiated Reexamination under 35 U.S.C. 313, and (4) deferral of the effective date for an election required by the notice.

DECISION

The petition sets forth, at page 1, a request for four types of relief using the conjunction "and" which would appear to indicate that all four types of relief are requested together (i.e., additive grounds). It is, however, clear from the remainder of the petition that the four types of relief requested by petitioner are alternative grounds of relief, and each will be addressed below, in turn, to the extent appropriate.

I. "[W]ithdrawal of the notice of April 22, 2003 as improper since jurisdiction is proper."

The reexamination statute was amended on November 29, 1999, by the 1999 American Inventors Protection Act (AIPA), Public Law 106-113, to expand reexamination by providing an "*inter partes*" option. [3] Section 4608 (effective date) of the AIPA provides:

> "(a) In General. – ... this subtitle and the amendments made by this subtitle shall take effect on the date of the enactment of this Act [November 29, 1999] and shall apply to any patent that issues from an original application filed in the United States on or after that date [November 29, 1999]." [emphasis added]

As was pointed out in the April 22, 2003, notice, the application for the patent for which the present reexamination was requested was filed prior to November 29, 1999 (the date of enactment of the AIPA), and, accordingly, the instant patent is not eligible for *inter partes* reexamination.

At pages 4-7 of the present petition, legislative history is presented and discussed with respect to circumstances surrounding the providing of *inter partes* reexamination in the enactment of the AIPA. These circumstances do not change the fact that the legislation was enacted by Congress, and it was signed into law by the President of the United States of America. In addition, while legislative history is useful in interpreting statutory language where the language of the statute is open to interpretation, in the present instance, the plain language of the statute is clear and not ambiguous. The enacted "subtitle and the amendments" made thereby are clearly stated (in Section 4608) to apply "to any patent that issues from an original application filed in the United States on or after" the date of enactment (November 29, 1999). The application for the patent for which the present reexamination was requested was filed prior to that date, and thus is not eligible for *inter partes* reexamination, pursuant to the *clear language* of the statute.

At page 2 of the petition, it is argued that Congress reconsidered Section 4608 of the AIPA, and repealed it "by implication" by way of "at least sections 13106 and 13202 of

---

[3] See Title IV, subtitle F (§§ 4601 through 4608) of the "Intellectual Property and Communications Omnibus Reform Act of 1999," S. 1948 (106th Cong. 1st Sess. (1999)) - Enacted as part of Pub. L. 106-113, 113 Stat. 1501, 1501A-552 through 1501A-591 (1999).

Public Law 107-273 [4] "[Footnote for the enactment added].

In response, note that Section 13106 of P.L. 107-273 is directed solely to *appeals* in *inter partes* reexamination and expands third party requester rights of appeal in an *inter partes* reexamination proceeding. Further, Section 13202 is directed solely to *appeals* in *ex parte* reexamination and makes statutory technical corrections with respect to same. Neither of Sections 13106 and 13202, nor any other provision of P.L. 107-273, is directed to expanding the eligibility of the pool of patents eligible for *inter partes* reexamination.

Petitioner asserts in the petition that Congress passed the AIPA legislation in haste and did not "substantively consider Section 4608." At page 7 of the petition, applicant states:

> "[W]hen the Justice Department Reauthorization Act was considered, since 4608 was not part of Title 35, it is not likely that Congress was anymore aware at the time of the passage in the Justice Department Reauthorization Act, that there were any limitations on the Inter Partes Reexamination practice by virtue of the date on which a patent issued. As a result, Congress granted, in sections 13106 and 13201 of the Justice Department Reauthorization Act a plenary right of appeal to any third party Inter Partes Reexamination requestor apparently under the assumption that participation rights were a given."

With respect to this point, it is to be noted that Congress had ample time to consider and reconsider Section 4608 of the AIPA, before passing H.R. 2215 (the underlying legislation incorporated as part of Title III, Subtitle A (Patent and Trademark Office) of Public Law 107-273), and its precursor bills. Yet H.R. 2215 did not revise the *inter partes* reexamination eligibility provision, while it did, at the same time, revise other reexamination effective date provisions. This shows a clear intent on the part of Congress to retain the *inter partes* reexamination eligibility provision of Section 4608 of the AIPA as-is, i.e., as it was enacted.

It is further to be noted that revision the *inter partes* reexamination eligibility provision was explicitly placed before Congress by way of Section 3(a) of H.R. 2231 introduced by Congressman Lofgren on June 19, 2001, [5] and referred to the House

---

[4] See the 21st Century Department of Justice Appropriations Authorization Act, TITLE III- INTELLECTUAL PROPERTY, Subtitle A - the "Patent and Trademark Office Authorization Act of 2002" - Enacted as part of Pub. L. 107-273, 116 Stat. 1758, 1899-1906 (2002).

[5] 107th CONGRESS, 1st Session

committee.[6] Yet it was not carried forward in H.R. 2215 which was incorporated into Public Law 107-273. Congress could have chosen to carry forward the substance of Section 3(a) of H.R. 2231, but declined to do so.

In view of the above, the April 22, 2003, notice, is deemed proper, and it will not be withdrawn. The first item of relief requested is accordingly denied.

II. "[W]aiver of 37 C.F.R 1.535(g) and 1.560 to permit Requestor to participate in Reexamination under 35 U.S.C. 301-307."

At pages 9-10 of the petition, requester urges that, if it elects to convert the request deposited April 17, 2003, to a request for *ex parte* reexamination, 37 CFR 1.535 and 1.560 should be waived pursuant to 37 CFR 1.183 to permit requester to participate in the reexamination proceeding. At page 15 of the petition, it is requested that *ex parte* reexamination procedure be "expanded by waver of 37 C.F.R 1.535 and 1.560." This is in effect a petition under 37 CFR 1.183 for waiver of the rules (though it was submitted as a "request").

37 CFR 1.4(c) provides that "each distinct subject, inquiry or order must be contained in a separate paper to avoid confusion and delay in answering papers dealing with different subjects." [Emphasis added]

The present request for a waiver of the rules is a distinct "subject" and/or "inquiry," and should have been provided in the form of a separate petition paper under 37 CFR 1.183, accompanied by the petition fee set forth in 37 CFR 1.17(h). Petitioner did not provide the separate petition paper, and did not provide the required petition fee. Accordingly, the issue is not ripe for a decision, and will not be decided herein.

It is, however, pointed out to petitioner that relief by way of a waiver of the rules cannot be provided in this instance, because third party requester participation in an *ex parte* reexamination is barred by statute, and the statute cannot be waived. Neither the rules nor any provision of the statute provide authority for a third party requester of a reexamination proceeding requested under 35 U.S.C. 302 to file a paper directed to the issues of the reexamination proceeding. *In re Amp*, 212 USPQ 826 (Comr. Pats. 1981). The statute and its intent are clear that a reexamination

---

[6] This bill was co-sponsored by Congressman Coble, who introduced the H.R. 1886 *inter partes* reexamination appeal provision which ultimately became Section 13106 of P.L. 107-273 which petitioner advances at page 2 of the petition.

proceeding requested under 35 U.S.C. 302 must be *ex parte*. *Syntex (U.S.A.) Inc. v. U.S. Patent and Trademark Office*, 11 USPQ2d 1866, 1869 (Fed. Cir. 1989) (third parties do not participate before the USPTO).

III. "[T]hat the Patent and Trademark Office order a Director Initiated Reexamination under 35 U.S.C. 313."

At page 15 of the petition, it is stated:

> "If neither of the previous requests for relief a granted, Requestor specifically requests that the Director of the Patent and Trademark Office initiate Inter Partes Reexamination under 35 U.S.C. 313 and allow Requestor to participate."

The present request for a Director Initiated Reexamination must be made via a petition under 37 CFR 1.182, since it is for "a question not specifically provided for." While 37 CFR 1.520 provides that the Director may order a reexamination at his initiative, even where a reexamination has not been requested under 37 CFR 1.510 or 1.913, 37 CFR 1.520 does not provide for a member of the public to request that the Director order reexamination at his own initiative. Further, 37 CFR 1.520 does not provide for a Director Initiated ***Inter Partes*** Reexamination, and there is no 1.900-series rule that does so. Thus, the present request for a Director Initiated Reexamination is clearly for relief "not specifically provided for in the regulations of this part," and such a request must be made via a petition under 37 CFR 1.182.

As noted above, 37 CFR 1.4(c) provides that each distinct subject, inquiry or order must be contained in a separate paper. The present request for a Director Initiated Reexamination is a distinct "subject" and/or "inquiry," and it should have been provided in the form of a separate petition paper under 37 CFR 1.182, accompanied by the petition fee set forth in 37 CFR 1.17(h). Petitioner did not provide the separate petition paper, and did not provide the required petition fee. Accordingly, the issue is not ripe for a decision, and will not be decided herein.

It is, however, pointed out to petitioner that relief by way of a Director Initiated ***Inter Partes*** Reexamination is not statutorily available to requester. The reference to a Director Initiated Reexamination in 35 U.S.C. 312(a) was explicitly deleted in a technical correction made by Section 13202(a)(2) of Public Law 107-273 (the 21st Century Department of Justice Appropriations

Authorization Act, enacted November 2, 2002).[7]

Accordingly, the reference to "section 312(a)" made in 35 U.S.C. 313 does not include a Director Initiated Reexamination for *inter partes* reexamination.

IV. "[D]eferral of the effective date for an election required by the Notice."

At page 15 of the petition, it is stated:

> "The Patents Special Projects Advisor indicated that Requestor must elect whether to pursue Inter Partes Reexamination or elect to convert the Inter Partes Request to an Ex Parte Request by the due date. Since that election cannot be reasonably be made without knowing the outcome of Patent and Trademark Office consideration of his petition and since Requestor has made a contingent election, Requestor requests that the requirement of the Patents Special Projects Advisor be held in abeyance until decision on this Petition is received by Requestor."

The request for a deferral of the effective date for the election required by the Notice must be made via a petition under 37 CFR 1.182, since it is for "a question not specifically provided for." Once again, petitioner has not provided a separate petition paper, nor the required petition fee. Accordingly, the issue is not ripe for a decision. The following is however pointed out to petitioner:

The third party requester has the option to initiate an *ex parte* reexamination of the instant patent by filing a new request for *ex parte* reexamination. Such a filing would not prejudice requestor, as compared to having the present reexamination papers converted at a future time as is requested in the petition. Requester would not be prejudiced because there is no negative consequence that would result from having a later filing date for a reexamination proceeding. Further, the filing fee that accompanied the present request papers is being returned in its entirety, so, requester

---

[7] The revision made to 35 U.S.C. 312(a) by P.L. 107-273 is shown as follows in strike-out/underline format:

REEXAMINATION.— Not later than 3 months after the filing of a request for inter partes reexamination under section 311, the Director shall determine whether a substantial new question of patentability affecting any claim of the patent concerned is raised by the request, with or without consideration of other patents or printed publications. ~~On the Director's initiative, and at any time, the Director may determine whether a substantial new question of patentability is raised by patents and publications.~~ The existence of a substantial new question of patentability is not precluded by the fact that a patent or printed publication was previously cited by or to the Office or considered by the Office.

does not lose any filing fee applied. Thus, the relief requested by petitioner could be obtained via a different avenue, and there would be no ground for granting a petition under 37 CFR 1.182, even if such had been properly filed.

RETURN OF PAPERS

The notice to requester of April 22, 2003 stated, as its last paragraph:

> "The *inter partes* reexamination 'request' papers are being temporarily held in the CRU pending a decision as to whether or not requester wants to replace the *inter partes* request for reexamination with an ex parte request for reexamination under 37 CFR 1.510. **If such decision is NOT received within two (2) weeks from the mailing date of this letter, the request papers will be returned to the requester."**

The instant petition was filed within the two week period; however, an election was not made in the petition.

At page 9 of the petition, a "Conditional Election" is stated as follows:

> "...if the Inter Partes Request for Reexamination of eight NTP patents is not granted, applicants elect to convert those Inter Partes Reexamination requests to ex parte requests, provided that the provisions of 37 C.F.R. 1.535 (g) and 1.560 are waived to permit requestor participation." [Emphasis added]

A waiver of 37 CFR 1.535(g) and 1.560 has not been granted in this decision; thus, the stated conditional election does not take effect.

In addition, the requested deferral of the effective date for an election required by the April 22, 2003, Notice has not been granted. Accordingly, the request papers are being **returned** with this decision.

The petition, and the present decision on the petition will be made of record in the patent file.

LACK OF SERVICE

The requisite proof of service (a Certificate of Service) on the patent owner was not included with the instant petition papers. Pursuant to 37 CFR 1.903

> "... any document filed by either the patent owner or the third party requester must be served on every other party in the reexamination proceeding in the manner provided in § 1.248. Any document must reflect service or the document may be refused consideration by the Office. The failure of the patent owner or the third party requester to serve documents may result in their being refused consideration."

Accordingly, the requester's petition is deficient for failure to reflect service of the response on the patent owner in accordance with 37 CFR 1.903.

Since the requisite proof of service on patent owner has not been included, a copy of the petition is being provided to the patent owner with this decision.

REFUND OF REEXAMINATION FILING FEE

The present deposit of an *inter partes* reexamination was made in error for the reasons set forth above. Pursuant to 35 U.S.C. § 42(d), "[t]he Director may refund any fee paid by mistake...." Accordingly, **a refund** of the $8,800 reexamination filing fee will be made to requester in due course by return of the check that was submitted with the request.

THIRD PARTY REQUESTER'S RECOURSE

In the event that the third party requester desires to initiate an *ex parte* reexamination of the instant patent, requester may wish to consider filing a new request for *ex parte* reexamination. Such a filing should include a specific identification of each substantial new question of patentability based on the cited patents and printed publications, as well as a detailed explanation of the pertinency and manner of applying the patents and publications to every claim for which reexamination is requested.

CONCLUSION

1. The third party requestor petition filed May 6, 2003, pursuant to 37 CFR 1.181, is denied.

2. The request papers deposited April 17, 2003, are being returned to the requester with this decision.

3. The requestor petition filed May 6, 2003, and this decision will be made of record in the patent file.

4. A refund of the $8,800 reexamination filing fee will be made to requester by return of the check that was submitted with the request papers.

5. A copy of the requester petition filed May 6, 2003, is being sent to the patent owner, along with this decision.

6. Telephone inquiries with regard to this decision should be directed to Kenneth M. Schor, Senior Legal Advisor, at 703-308-6710.

Robert J. Spar
Director
Office of Patent Legal Administration
Office of the Deputy Commissioner
for Patent Examination Policy

June 3, 2003
C:\kiva\kenpet4\ip\5436960n.ip

UNITED STATES PATENT AND TRADEMARK OFFICE

COMMISSIONER FOR PATENTS
UNITED STATES PATENT AND TRADEMARK OFFICE
P.O. BOX 1450
ALEXANDRIA, VA 22313-1450
www.uspto.go

Paper No. 37

Donald E. Stout
ANTONELLI, TERRY, STOUT & KRAUS
Suite 1800
1300 North 17th Street
Arlington, VA 22209

(For Patent Owner)

MAILED
JUN 12 2003
REEXAM UNIT

David L. Stewart
ALLEN, DYER, DOPPELT, MILBRATH
& GILCHRIST, P.A.
255 South Orange Avenue
Suite 1401
Orlando, FL 32802

(For Requester)

In re Campana, Jr. et al.
Request for *Inter Partes* Reexamination Proceeding
For: U.S. Patent No. 5,436,960
Deposited[1]: April 17, 2003

: **SUPPLEMENTAL**
: **DECISION**
: **DENYING**
: **PETITION**

This is a supplemental decision to the decision mailed on June 6, 2003, on the third party requester's petition of May 6, 2003. The June 6, 2003, decision denied the third party requester petition under 37 C.F.R. § 1.181 for (l) withdrawal of the notice of April 22, 2003,[2] as improper

[1] The request papers are stated as having been "deposited, " as opposed to "filed," since no filing date has been assigned to the papers.

[2] The April 22, 2003, notice informed requester that the present patent for which *inter partes* reexamination was requested was not eligible for *inter partes* reexamination pursuant to Section 4608 of the American Inventor's Protection Act.

since jurisdiction is proper, (2) waiver of 37 C.F.R. § 1.535(g) and § 1.560 to thus permit requester to participate in a reexamination under 35 U.S.C. 301-307, (3) an order of a Director Initiated Reexamination under 35 U.S.C. 313, and (4) deferral of the effective date for an election required by the Notice of April 22, 2003. This matter is before the Director of the Office of Patent Legal Administration for clarification.

For the reasons set forth in the decision of June 6, 2003, the petition was denied. In addition, the decision stated that the "request papers" and the reexamination filing fee submitted with the request papers were returned to the requester. This supplemental decision clarifies what was returned as the "request papers."

REVIEW OF FACTS

1. U.S. Patent No. 5,436,960 (hereinafter, the '960 patent), issued to Campana, Jr. et al., on July 25, 1995, from an application filed on May 20, 1991.

2. On April 17, 2003, a request for *inter partes* reexamination was deposited in the Office by the third party requester. The deposited request comprised "request papers" which include a statement that reexamination is requested, a table of contents (of the prior art references), a reference to the filing fee, and a copy of the '960 patent. In addition, the request included two boxes containing the copies of the references cited in the request, as well as claim charts interspersed therewith.

3. A notice was mailed on April 22, 2003, informing requester that the present patent for which *inter partes* reexamination was requested is **not eligible** for *inter partes* reexamination (pursuant to Section 4608 of the American Inventor's Protection Act). The notice set a two week period for requester to elect to replace the *inter partes* request for reexamination with an *ex parte* request for reexamination under 37 C.F.R. § 1.510, pointing out that if such an election was not received within the two week period, the request papers would be returned to requester.

4. On May 6, 2003, requester filed a petition requesting (1) withdrawal of the notice as improper, (2) waiver of 37 C.F.R. § 1.535(g) and § 1.560 to permit requester participation in a reexamination under 35 U.S.C. 301-307, (3) a Director Initiated Reexamination under 35 U.S.C. 313, and (4) deferral of the effective date for an election required by the notice.

5. A decision denying the petition was mailed on June 6, 2003[3].

[3] The address portion of the decision of June 6, 2003, inadvertently indicated that the enclosures sent to requester were request papers deposited December 26, 2002. The body of the decision, however, correctly states in the Conclusion on page 10 that the request papers being returned to requester were deposited on April 17, 2003.

CLARIFICATION RE: RETURN OF PAPERS

The Notice to requester mailed on April 22, 2003, stated in its' last paragraph:

> "The *inter partes* reexamination 'request' papers are being temporarily held in the CRU pending a decision as to whether or not requester wants to replace the *inter partes* request for reexamination with an *ex parte* request for reexamination under 37 C.F.R. § 1.510. **If such decision is NOT received within two (2) weeks from the mailing date of this letter, the request papers will be returned to the requester.**"

The petition of May 6, 2003, was filed within the two week period, however, an election was not made in the petition. In addition, the requested deferral of the effective date for an election required by the Notice of April 22, 2003, was not granted. Accordingly, the reexamination request was returned with the decision mailed June 6, 2003.

This supplemental decision clarifies that only the "request papers" were in fact returned with the June 6, 2003, decision; the boxes containing *inter alia* the references were not returned. The request papers which were returned include a statement that reexamination is requested, a table of contents (of the prior art references), a reference made as to the filing fee, and a copy of the '960 patent. The two boxes containing the copies of references cited in the request, as well as the claim chart interspersed therewith, were **not** returned **due to their voluminous nature**.

The boxes of reference copies which accompanied the request for *inter partes* reexamination are being temporarily held in the Central Reexamination Unit (CRU). If the third party requester desires a return of the boxes, then requester should promptly make arrangements to pick up such boxes from the CRU **within one month** of the mailing date of this supplemental decision. Requester should immediately notify Marsha Twitty of the CRU, at telephone number (703) 308-9692, of any arrangements that have been made to pick up such boxes. If the boxes are **not** picked up **within one month** of the mailing date of this supplemental decision, **the CRU may dispose of such boxes.**

The petition, the previous petition decision and the present supplemental decision denying the petition will be made of record in the patent file.

THIRD PARTY REQUESTER'S RECOURSE

As indicated in the previous petition decision, in the event that the third party requester desires to initiate an *ex parte* reexamination of the instant patent, requester may wish to consider filing a new request for *ex parte* reexamination pursuant to 37 C.F.R. § 1.510.

In this regard, note that the **mailing address** for the U.S. Patent & Trademark Office has **changed, as of May 1, 2003.**

All new **requests for an *ex parte* reexamination proceeding** should be directed:

by Mail to: Mail Stop *Ex Parte* Reexam
Central Reexamination Unit
Office of Patent Legal Administration
United States Patent & Trademark Office
P.O. Box 1450
Alexandria, VA 22313-1450

All correspondence relating to an *inter partes* reexamination proceeding (a new request may not be submitted by FAX) should be directed:

by Mail to: Mail Stop *Inter Partes* Reexam
Central Reexamination Unit
Office of Patent Legal Administration
United States Patent & Trademark Office
P.O. Box 1450
Alexandria, VA 22313-1450

by FAX to: (703) 305-1013
Central Reexamination Unit

By hand: Central Reexamination Unit
Crystal Plaza Three-Four, 3D68
2201 South Clark Place
Arlington, VA 22202

CONCLUSION

1. The third party requester petition filed May 6, 2003, pursuant to 37 C.F.R. § 1.181, was denied in a decision mailed on June 6, 2003, and the present decision is supplemental to that decision.

2. The request for *inter partes* reexamination deposited April 17, 2003, was returned to the requester with the petition decision of June 6, 2003. The return of the request included a refund of the $8,800 reexamination filing fee by return of the check that was submitted with the request and marked void.

3. The boxes of reference copies (including the claim chart interspersed with the reference copies) were not returned with the decision mailed on June 6, 2003, and the boxes are being temporarily stored in the CRU.

4. If the third party requester desires a return of the boxes, then requester should promptly make arrangements to pick up such boxes from the CRU **within one month** of the mailing date of this supplemental decision.

5. If the boxes are **not** picked up **within one month** of the mailing date of this supplemental decision, then the CRU **may dispose of such boxes**.

6. This decision will be made of record in the patent file, to accompany the petition and the June 6, 2003, decision.

7. Telephone inquiries with regard to this decision should be directed to Lynn M. Kryza, Patent Special Projects Advisor, at (703) 308-0255 or Kenneth Schor, Senior Legal Advisor, at (703) 308-6710. Telephone inquiries with regard to making arrangements for picking up the boxes of references presently stored in the CRU should be directed to Marsha Twitty at (703) 308-9692.

6/12/03

Robert J. Spar
Director
Office of Patent ~~Legal~~ Administration
Office of the Deputy Commissioner
for Patent Examination Policy

UNITED STATES PATENT AND TRADEMARK OFFICE

COMMISSIONER FOR PATENTS
UNITED STATES PATENT AND TRADEMARK OFFICE
P.O. BOX 1450
ALEXANDRIA, VA 22313-1450
www.uspto.gov

Paper No. 39

Donald E. Stout (For Patent Owner)
Antonelli, Terry, Stout & Kraus
Suite 1800
1300 N. 17th Street
Arlington, VA 22209

Enclosure: Copy of Requester Petition filed July 31, 2003

MAILED
NOV 25 2003
REEXAM UNIT

David L. Stewart (For Requester)
ALLEN DYER DOPPELT MILBRATH
& GILCHRIST, P.A.
Suite 1401
Orlando, FL 32802

Enclosure: Reexamination request papers deposited April 17, 2003

In re Campana, Jr. et al. Request For Reexamination Proceeding For: U.S. Patent No. 5,436,960 Deposited[1]: April 17, 2003	DECISION DENYING PETITION

This is a decision on the July 31, 2003, third party requestor petition titled "Petition to the Under Secretary of Commerce for Intellectual Property and Director of the United States Patent and Trademark Office, in Person, from a Decision of the Director of the Office of Patent Legal Administration under 37 C.F.R. § 1.181."

The petition is **granted** to the extent that the June 6, 2003, and June 12, 2003, decisions of the Director of the Office of Patent Legal Administration (OPLA) have been reviewed by a higher level official within the United States Patent and Trademark Office (Office), but is **denied** as to overturning the decision by the Director of OPLA.

---

[1] The request papers are stated as having been "deposited," as opposed to "filed," since no filing date has been assigned to the papers.

REVIEW OF FACTS

1. U.S. Patent No. 5,436,960 (hereinafter, the '960 patent), issued to Campana, Jr. et al., on July 25, 1995, from an application filed on May 20, 1991.

2. On January 30, 2003, a request for *ex parte* reexamination of the '960 patent was filed and was assigned control number 90/006,533. Reexamination was ordered April 17, 2003.

3. On April 17, 2003, the present request for *inter partes* reexamination was deposited in the Office by the third party requester.

4. On April 22, 2003, a notice was issued informing requester that the present patent for which *inter partes* reexamination was requested was not eligible for *inter partes* reexamination (pursuant to Section 4608 of the American Inventor's Protection Act). The notice set a two week period for requester to elect to replace the *inter partes* request for reexamination with an *ex parte* request for reexamination under 37 CFR 1.510, pointing out that if such an election was not received within the two week period, the request papers would be returned to requester.

5. On May 6, 2003, the requester filed a petition under 37 CFR 1.181, requesting (1) withdrawal of the notice as improper, (2) waiver of 37 CFR 1.535(g) and 1.560 to permit requestor participation in a reexamination under 35 U.S.C. 301-307, (3) a Director Initiated Reexamination under 35 U.S.C. 313, and (4) deferral of the effective date for an election required by the notice.

6. A decision of the Director of OPLA was mailed on June 6, 2003, and supplemented on June 12, 2003, in which the requestor petition under 37 CFR 1.181 filed May 6, 2003, was denied,[2] and for return of the deposited request papers to the requester.

7. On June 24, 2003, the requester filed a request for an ***ex parte*** reexamination of the '960 patent, which was assigned control number 90/006,675.

---

[2] *Some of the issues raised in the May 6th petition were found not to be ripe for decision, and were not decided.*

8. On July 31, 2003, the requester filed the present petition under 37 CFR 1.181, for review of the decision of the Director of OPLA.

9. Also on July 31, 2003, the requester filed a petition under 37 CFR 1.183 requesting waiver of 37 CFR §§ 1.535, 1.550(g) and 1.560, to permit third party requester participation in the examination stage of the 90/006,675 *ex parte* reexamination proceeding.

REQUEST FOR PERSONAL REVIEW BY THE DIRECTOR

The petition is addressed to the Director of the United States Patent and Trademark Office (the Director). It is inappropriate and not feasible for the Director to personally review all papers requesting relief that are directed to him; such personal review is not a matter of right and lies within the sound discretion of the Director. *See Corrigan v. v. Alexeevsky, et al.*, 200 USPQ 368(Comr. Pat. 1978), *In re Staeger*, 189 USPQ 284 (Comr. Pat. 1974) The Director will not review a decision in person except in unusual or exceptional circumstances. *See Id.* In the present instance, the petition does not present unusual and exceptional circumstances that would justify the requested "In Person" review by the Director. Inasmuch as the authority for deciding petitions from a Decision of the Director of OPLA has been delegated to the Deputy Commissioner for Patent Examination Policy, the instant petition has been forwarded to the Deputy Commissioner for Patent Examination Policy for treatment as a petition under 37 CFR 1.181(a)(3) requesting review of the decision of the Director of OPLA by a higher level Office official.

DECISION

1. In his June 6, 2003, decision, the Director of OPLA found that the instant patent is not eligible for *inter partes* reexamination, and thus, the deposited papers requesting an *inter partes* reexamination of instant patent are to be returned to the requester. The present petition takes issue with, and seeks review of, that finding. As pointed out in the June 6th decision:

The reexamination statute was amended on November 29, 1999, by the 1999 American Inventors Protection Act (AIPA), Public Law 106-113, to expand reexamination by providing an "*inter partes*" option. [3] Section 4608 (effective date) of the AIPA provides:

> "(a) In General. – ... this subtitle and the amendments made by this subtitle shall take effect on the date of the enactment of this Act [November 29, 1999] and shall apply to any patent that issues from an original application filed in the United States on or after that date [November 29, 1999]." [emphasis added]

The application for the instant patent was filed prior to November 29, 1999 (the date of enactment of the AIPA), and, accordingly, the instant patent is not eligible for *inter partes* reexamination.

2. At page 4 of the petition, it is argued that:

> "the position taken in the decision(s) by the Director of the Office of Patent Legal Administration with respect to Section 4608 prohibits the PTO from declaring, in an Inter Partes proceeding, claims from a parent application to be unpatentable even though they are not patentably distinct from claims in a continuing application [filed on or after November 29, 1999]. In the Requests for Inter Partes Reexamination under consideration in this petition, the PTO has accepted Inter Partes Reexamination status for U.S. Patent No. 6,317,592, even though the claims of many of the above-identified applications are acknowledged as patentably not distinct by the filing of a Terminal Disclaimer."

In response, it is initially to be observed that while the claims from a parent application filed prior to November 29, 1999 cannot be declared "to be unpatentable" in an *inter partes* reexamination proceeding, petitioner is free to file a request for an *ex parte* reexamination proceeding (and has done so) in an effort to have such claims of the parent declared unpatentable. To the extent that petitioner is pointing out that it does not appear consistent to bar *inter partes* reexamination for a parent patent, while such is permitted for a continuation having patentably indistinct claims, this is simply the result mandated by the effective date provision (section 4608) of the *inter partes* reexamination provisions of the AIPA. It is not within the

---

[3] See Title IV, subtitle F (§§ 4601 through 4608) of the "Intellectual Property and Communications Omnibus Reform Act of 1999," S. 1948 (106th Cong. 1st Sess. (1999)) - Enacted as part of Pub. L. 106-113, 113 Stat. 1501, 1501A-552 through 1501A-591 (1999).

authority of the Office to permit an *inter partes* reexamination for the instant patent, since the effective date provision (section 4608) of the *inter partes* reexamination provisions of the AIPA does not make the *inter partes* reexamination provisions of the AIPA applicable to a patent resulting from an application filed before November 29, 1999, simply because that patent contains one or more claims which are not patentably distinct from a patent resulting from an application filed on or after November 29, 1999, (and to which the *inter partes* reexamination provisions of the AIPA would apply).

3. At page 4 of the petition, it is pointed out that:

> "the position taken in the decision(s) by the Director of the Office of Patent Legal Administration with respect to Section 4608 effectively guts the applicability of Inter Partes Reexamination by limiting its applicability to only 3.9% of patents.... Given the legislative history, described somewhat below, it would require an extraordinary leap to assume that a majority of both houses of Congress intended Inter Partes Reexamination to apply to only 3.9% of issued patents."

As to the "legislative history," page 5 of the petition then presents comments directed to circumstances surrounding the providing of *inter partes* reexamination in the enactment of the AIPA, and as to the viability of using the *inter partes* reexamination process.

In addressing petitioner's argument of Congressional intent and legislative history, the following is to be noted:

Regardless of the circumstances of enactment and comments on viability of the enacted process, the legislation was enacted by Congress, and it was signed into law by the President of the United States of America. While legislative history may useful in interpreting statutory language where the language of the statute is open to interpretation, in the present instance, the plain language of the statute is clear and not ambiguous. The enacted "subtitle and the amendments" made thereby are clearly stated (in Section 4608) to apply "to any patent that issues from an original application filed in the United States on or after" the date of enactment (November 29, 1999). The application for the instant patent, for which the *inter partes* reexamination is requested, was filed prior to that date; thus, the patent is not eligible for *inter partes* reexamination, pursuant to the *clear language* of the statute.

It is further noted that Congress had ample time to consider and reconsider Section 4608 of the AIPA, before passing H.R. 2215 (the underlying legislation incorporated as part of Title III, Subtitle A (Patent and Trademark Office) of Public Law 107-273), and its precursor bills. Yet H.R. 2215 did not revise the *inter partes* reexamination eligibility provision, while it did, at the same time, revise other reexamination effective date provisions. This shows a clear intent on the part of Congress to retain the *inter partes* reexamination eligibility provision of Section 4608 of the AIPA as-is, i.e., as it was enacted.

4. At pages 7-8 of the petition, a Constitutionality issue is raised. Petitioner argues that:

> "The Decision by the Director of the Office of Patent Legal Administration that the Patent and Trademark Office does not have authority under Section 4608 of the AIPA to accept the above-identified Requests for Inter Partes Reexamination is constitutionally questionable....Issuing a patent that is invalid based on prior art is an unconstitutional act because it gives exclusive rights to individuals who are not "inventors" in a Constitutional sense. Since issuing a patent that is invalid based on prior art is unconstitutional, the PTO has inherent authority to declare such issuance invalid and improper without the need for any authorizing legislation. Section 4608 may be unconstitutional to the extent it purports to limit an Executive Branch Agency (the PTO) in correcting its own unconstitutional acts."

Petitioner then[4] requests that the Office:

> "utilize its inherent Constitutional Authority to ignore 4608 and accept the above-described Requests for Inter Partes Reexamination. Petitioner respectfully requests that the PTO hold Section 4608 of the AIPA to be unconstitutional and accept the above-described Requests for Inter Partes Reexamination.

Petitioner appears to be arguing that the Section 4608 *inter partes* reexamination effective date provision is unwise and should not be adhered to, and that Article I, § 8, cl. 8 of the U.S. Constitution ("Congress shall have the power...[t]o promote the progress of science and useful arts, by securing for limited times to authors and inventors the exclusive right to their respective writings and discoveries") provides a basis for the Office to ignore the limitations in the AIPA on the applicability of *inter partes* reexamination. It is brought to petitioner's attention that the Constitution grants Congress the authority to

---

[4] Petition at page 8.

legislate on the subject of patents; it does not provide that there be must a patent office (or a United States Patent and Trademark Office), much less vest the Office with any inherent authority to act or correct its acts. Thus, whatever authority the Office possesses to examine applications, grant patents, or reexamine previously granted patents must be found in the Office's enabling legislation (title 35 U.S.C.). Put simply, the Constitution does not provide the Office with the inherent authority to correct its "mistakes;" rather the Office's authority to correct such "mistakes" is limited to that authority provided to it in title 35, U.S.C. (i.e., 35 U.S.C. chapters 25, 30, and 31). It is further noted that the Federal courts have generally held that the power of Congress to legislate on the subject of patents is plenary by the terms of the Constitution. *See e.g., McClurg v. Kingsland*, 42 U.S. (1 How.) 202, 206 (1843); *see also Owen v. Heimann*, 12 F.2d 173, 174 (D.C. Cir.), cert. denied, 271 U.S. 685 (1926) ("Congress has full power to prescribe to whom and upon what terms and conditions a patent shall issue"); *Kling v. Haring*, 11 F.2d 202, 204-05 (D.C. Cir.), *cert. denied*, 271 U.S. 671 (1926) (same). In any event, administrative agencies do not have the authority to declare unconstitutional the laws they are charged with administering. *See, e.g., Oestereich v. Selective Service Board*, 393 U.S. 233, 242 (1968); *McGowan v. Marshall*, 604 F.2d 885, 892 (5th Cir. 1979); and *Buckeye Industries, Inc. v. Secretary of Labor*, 587 F.2d 231 (5th Cir. 1979).

5. At pages 5-7 of the petition, it is argued that the Section 4608 *inter partes* reexamination effective date provision of the AIPA has been repealed by implication, based upon the legislative expansion of third party requester appeal rights provided by Public Law 107-273. [5] At page 6 of the petition, sections 13106 and 13202 of Public Law 107-273 [6] are relied upon to show that the "broad scope of the right to appeal appears to repeal by implication" the Section 4608 effective date provision.

In response, Congress is well versed in the mechanism for changing an effective date of prior legislation (as it did in Public Law 107-273 for the eighteen-month publication provisions of the AIPA), and Congress did not do so for the *inter partes* reexamination effective date provisions of the AIPA. It is to

---

[5] The 21st Century Department of Justice Appropriations Authorization Act, enacted on November 2, 2002. *See* Pub. L. 107-273, 116 Stat. 1758, 1899-1906 (2002)

[6] TITLE III- INTELLECTUAL PROPERTY, Subtitle A - the "Patent and Trademark Office Authorization Act of 2002."

be noted that a provision for revision of the *inter partes* reexamination eligibility effective date was explicitly placed before Congress by way of Section 3(a) of H.R. 2231 introduced on June 19, 2001 and referred to the House committee. *See* H.R. 2231, 107th Cong., 1st Sess. (2001). This explicit provision to revise the *inter partes* reexamination eligibility effective date was before Congress; yet, it was *not carried forward* into Public Law 107-273.

As to sections 13106 and 13202 of Public Law 107-273 that are relied upon by petitioner:

Section 13106 of P.L. 107-273 is directed solely to *appeals* in *inter partes* reexamination and expands third party requester rights of appeal in an *inter partes* reexamination proceeding. Section 13202 is directed solely to *appeals* in *ex parte* reexamination and makes statutory technical corrections with respect to same. Neither of Sections 13106 and 13202, nor any other provision of P.L. 107-273, is directed to expanding the pool of patents eligible for *inter partes* reexamination.

THE ULTIMATE HOLDING OF THE DIRECTOR OF OPLA IN THE PROCEEDING

In this instance, the Director of the OPLA found that the instant patent is not statutorily eligible for *inter partes* reexamination, and accordingly, the deposited request papers would be returned to the requester. In the present decision, based upon a plenary review of the record, it has been determined that an *inter partes* reexamination for the present patent is barred by statute, for the reasons set forth above. Accordingly, there is no reversible error and no basis for disturbing the OPLA Director's decisions of June 6, 2003, and June 12, 2003, to return the *inter partes* reexamination request papers. Thus, the present petition is **denied** as to the petition to reverse the decision of the OPLA Director.

WAIVER OF THE RULES TO PERMIT REQUESTOR PARTICIPATION IN *EX PARTE* REEXAMINATION PROCEEDING

As pointed out above the requester filed, on June 24, 2003, a request for ***ex parte*** reexamination of the instant patent (under 35 U.S.C. 302). Beginning at page 8 of the present petition, a discussion is provided as to why requester should be granted a waiver of 37 CFR §§ 1.535, 1.550(g) and 1.560 to permit requestor to participate in the *ex parte* reexamination proceeding that

would be conducted, if that reexamination request is granted.[7] This discussion as to the question of waiver is being addressed in a concurrently issued decision on requester's July 31, 2003, petition under 37 CFR 1.183 requesting waiver of 37 CFR §§ 1.535, 1.550(g) and 1.560.[8] Accordingly, the matter is not further addressed herein.

RETURN OF THE REQUEST PAPERS

In the OPLA Director's supplemental decision of June 12, 2003, it was stated that the request for *inter partes* reexamination of the present patent deposited April 17, 2003, was returned to the requester with the petition decision of June 6, 2003, and a refund of the $8,800 reexamination filing fee.[9] It was further stated that the boxes of reference copies were not returned, and such boxes were being temporarily stored in the Central Reexamination Unit (CRU), and the third party requester was given one month to make arrangements to pick up such boxes from the CRU.

At page 13 of the petition, however, it is pointed out that:

> "[a]lthough the decisions of May 6, 2003 stated that the Requests for Inter Partes Reexamination were returned with the decisions, in fact, no such Requests were received with the decisions. Accordingly, Petitioners respectfully request that the above-identified Request for Inter Partes Reexamination continue to be retained by the PTO pending a decision on this Petition."

A review of the patent file and the boxes reveals that the original request papers were indeed not returned to the requester. Accordingly, the request papers deposited April 17, 2003, are being <u>returned</u> to the requester with this decision.

It is noted that petitioner requested [10] that the request papers deposited April 17, 2003, "continue to be retained by the PTO

---

[7] Reexamination was subsequently ordered for the proceeding.

[8] That petition seeks to permit third party requester participation in the examination stage of the *ex parte* reexamination proceeding.

[9] The refund was effected by return of the check that was submitted with the request and marked void.

[10] Petition at page 14.

pending a final decision on all issues raised by this Petition." The instant decision is such a final decision, as set forth below.

LACK OF SERVICE

The requisite proof of service on the patent owner (a Certificate of Service) was not included with the instant petition papers. Pursuant to 37 CFR 1.903:

> "... any document filed by either the patent owner or the third party requester must be served on every other party in the reexamination proceeding in the manner provided in § 1.248. Any document must reflect service or the document may be refused consideration by the Office. The failure of the patent owner or the third party requester to serve documents may result in their being refused consideration."

Accordingly, the requester's petition is deficient for failure to reflect service of the response on the patent owner in accordance with 37 CFR 1.903.

Since the requisite proof of service on patent owner has not been included, a copy of the petition is being provided to the patent owner with this decision.

CONCLUSION

1. The present petition under 37 CFR 1.181(a)(3) is **granted** to the extent that the June 6, 2003, and June 12, 2003, decisions of the Director of the OPLA have been reviewed, but is **denied** as to overturning the decision by the Director of the OPLA.

2. The petition and this decision will be made of record <u>in the patent file</u>.

3. A copy of the petition is being sent to the patent owner, along with this decision.

4. The request papers deposited April 17, 2003, are being returned to the requester with this decision.

5. No further reconsideration or review of this matter will be undertaken by way of petition.

6. This decision may be viewed as a **final agency action** within the meaning of 5 U.S.C. 704, for purposes of seeking judicial review. See MPEP 1002.02.

7. Telephone inquiries with regard to this decision should be directed to Kenneth M. Schor, Senior Legal Advisor, Office of Patent Legal Administration, at 703-308-6710.

Stephen G. Kunin
Deputy Commissioner for
Patent Examination Policy

November 12, 2003
C:\kiva\kenpet4\ip\5436960.rcn

Approved for use through 04/30/2009. OMB 0651-0016
U.S. Patent and Trademark Office: U.S. DEPARTMENT OF COMMERCE
Under the Paperwork Reduction Act of 1995, no persons are required to respond to a collection of information unless it displays valid OMB control number.

PETITION TO ACCEPT UNINTENTIONALLY DELAYED PAYMENT OF MAINTENANCE FEE IN AN EXPIRED PATENT (37 CFR 1.378(c))

Patent Number	Issue Date (YYYY-MM-DD)	Application Number	Filing Date (YYYY-MM-DD)	Docket Number (if applicable)
5,249,237	1993-09-28	07/708,924	1991-05-31	

CAUTION: Maintenance fee (and surcharge, if any) payment must correctly identify: (1) the patent number and (2) the application number of the actual U.S. application leading to issuance of that patent to ensure the fee(s) is/are associated with the correct patent. 37 CFR 1.366(c) and (d).

SMALL ENTITY
☒ Patentee claims, or has previously claimed, small entity status. See 37 CFR 1.27.

LOSS OF ENTITLEMENT TO SMALL ENTITY STATUS
☐ Patentee is no longer entitled to small entity status. See 37 CFR 1.27(g)

NOT Small Entity			Small Entity		
	Fee	Code		Fee	Code
○	3 ½ year	(1551)	○	3 ½ year	(2551)
○	7 ½ year	(1552)	○	7 ½ year	(2552)
○	11 ½ year	(1553)	◉	11 ½ year	(2553)

SURCHARGE
The surcharge required by 37 CFR 1.20(i)(2) (Fee Code 1558) must be paid as a condition of accepting unintentionally delayed payment of the maintenance fee.

MAINTENANCE FEE (37 CFR 1.20(e)-(g))
The appropriate maintenance fee must be submitted with this petition.

STATEMENT
THE UNDERSIGNED CERTIFIES THAT THE DELAY IN PAYMENT OF THE MAINTENANCE FEE TO THIS PATENT WAS UNINTENTIONAL

PETITIONER(S) REQUEST THAT THE DELAYED PAYMENT OF THE MAINTENANCE FEE BE ACCEPTED AND THE PATENT REINSTATED

THIS PORTION MUST BE COMPLETED BY THE SIGNATORY OR SIGNATORIES

37 CFR 1.378(d) states: "Any petition under this section must be signed by an attorney or agent registered to practice before the Patent and Trademark Office, or by the patentee, the assignee, or other party in interest."

I certify, in accordance with 37 CFR 1.4(d)(4) that I am

◉ An attorney or agent registered to practice before the Patent and Trademark Office

○ A sole patentee

○ A joint patentee; I certify that I am authorized to sign this submission on behalf of all the other patentees.

○ A joint patentee; all of whom are signing this e-petition

○ The assignee of record of the entire interest

Patent Practitioner			
A signature of the applicant or representative is required in accordance with 37 CFR 1.33 and 10.18. Please see 37 CFR 1.4(d) for the form of the signature			
Signature	/Roy Kim/	Date (YYYY-MM-DD)	2007-02-06
Name	Roy Kim	Registration Number	51883

This collection of information is required by 37 CFR 1.378(c). The information is required to obtain or retain a benefit by the public which is to file (and by the USPTO to process) an application. Confidentiality is governed by 35 U.S.C. 122 and 37 CFR 1.11 and 1.14. This collection is estimated to take 1 hour to complete, including gathering, preparing, and submitting the completed application form to the USPTO. Time will vary depending upon the individual case. Any comments on the amount of time you require to complete this form and/ or suggestions for reducing this burden, should be sent to the Chief Information Officer, U.S. Patent and Trademark Office, U.S. Department of Commerce, P.O. Box 1450, Alexandria, VA 22313-1450. DO NOT SEND FEES OR COMPLETED FORMS TO THIS ADDRESS. **This form can only be used when in conjunction with EFS-Web. If this form is mailed to the USPTO, it may cause delays in reinstating the patent.**

Privacy Act Statement

The Privacy Act of 1974 (P.L. 93-579) requires that you be given certain information in connection with your submission of the attached form related to a patent application or patent. Accordingly, pursuant to the requirements of the Act, please be advised that: (1) the general authority for the collection of this information is 35 U.S.C. 2(b)(2); (2) furnishing of the information solicited is voluntary; and (3) the principal purpose for which the information is used by the U.S. Patent and Trademark Office is to process and/or examine your submission related to a patent application or patent. If you do not furnish the requested information, the U.S. Patent and Trademark Office may not be able to process and/or examine your submission, which may result in termination of proceedings or abandonment of the application or expiration of the patent.

The information provided by you in this form will be subject to the following routine uses:

1. The information on this form will be treated confidentially to the extent allowed under the Freedom of Information Act (5 U.S.C. 552) and the Privacy Act (5 U.S.C. 552a). Records from this system of records may be disclosed to the Department of Justice to determine whether the Freedom of Information Act requires disclosure of these record s.

2. A record from this system of records may be disclosed, as a routine use, in the course of presenting evidence to a court, magistrate, or administrative tribunal, including disclosures to opposing counsel in the course of settlement negotiations.

3. A record in this system of records may be disclosed, as a routine use, to a Member of Congress submitting a request involving an individual, to whom the record pertains, when the individual has requested assistance from the Member with respect to the subject matter of the record.

4. A record in this system of records may be disclosed, as a routine use, to a contractor of the Agency having need for the information in order to perform a contract. Recipients of information shall be required to comply with the requirements of the Privacy Act of 1974, as amended, pursuant to 5 U.S.C. 552a(m).

5. A record related to an International Application filed under the Patent Cooperation Treaty in this system of records may be disclosed, as a routine use, to the International Bureau of the World Intellectual Property Organization, pursuant to the Patent Cooperation Treaty.

6. A record in this system of records may be disclosed, as a routine use, to another federal agency for purposes of National Security review (35 U.S.C. 181) and for review pursuant to the Atomic Energy Act (42 U.S.C. 218(c)).

7. A record from this system of records may be disclosed, as a routine use, to the Administrator, General Services, or his/her designee, during an inspection of records conducted by GSA as part of that agency's responsibility to recommend improvements in records management practices and programs, under authority of 44 U.S.C. 2904 and 2906. Such disclosure shall be made in accordance with the GSA regulations governing inspection of records for this purpose, and any other relevant (i.e., GSA or Commerce) directive. Such disclosure shall not be used to make determinations about individuals.

8. A record from this system of records may be disclosed, as a routine use, to the public after either publication of the application pursuant to 35 U.S.C. 122(b) or issuance of a patent pursuant to 35 U.S.C. 151. Further, a record may be disclosed, subject to the limitations of 37 CFR 1.14, as a routine use, to the public if the record was filed in an application which became abandoned or in which the proceedings were terminated and which application is referenced by either a published application, an application open to public inspections or an issued patent.

9. A record from this system of records may be disclosed, as a routine use, to a Federal, State, or local law enforcement agency, if the USPTO becomes aware of a violation or potential violation of law or regulation.

UNITED STATES PATENT AND TRADEMARK OFFICE

Commissioner for Patents
United States Patent and Trademark Office
P.O. Box 1450
Alexandria, VA 22313-1450
www.uspto.gov

In re Patent No. 5249237
Issue Date: September 28,1993
Application No. 07708924
Filed: May 31,1991
Attorney Docket No. 2205-35226

:
:DECISION GRANTING PETITION
:UNDER 37 CFR 1.378(c)
:

This is a decision on the electronic petition, filed February 7,2007 ,under 37 CFR 1.378(c) to accept the unintentionally delayed payment of the 11.5 year maintenance fee for the above-identified patent.

The petition is GRANTED.

The maintenance fee is accepted, and the above-identified patent reinstated as of February 7,2007 . This decision also constitutes notice that the fee has been accepted. An electronic copy of the petition and this decision has been created as an entry in an Image File Wrapper. Nevertheless, petitioner should print and retain an independent copy

Telephone inquires related to this electronic decision should be directed to the Electronic Business Center at 1-866-217-9197.

UNITED STATES PATENT AND TRADEMARK OFFICE

COMMISSIONER FOR PATENTS
UNITED STATES PATENT AND TRADEMARK OFFICE
P.O. BOX 1450
ALEXANDRIA, VA 22313-1450
www.uspto.gov

Paper No. 9

JORGE TAYLOR
274 W. 40 Street
Apt. #28
New York, NY 10018

COPY MAILED

SEP 12 2005

OFFICE OF PETITIONS

In re Patent No. 5,178,701 :
Jorge Taylor :
Issue Date: January 12, 1993 : ON
Application No. 07/710,752 : PETITION
Filed: May 31, 1991 :
Title: CHEMICAL SEALANT DEVICE:
FOR REPAIRING FLAT TIRES :

This is in response to the communication received April 1, 2005. Patentee requests reinstatement of the above-identified patent on the basis that the maintenance fee was timely paid.

The patent issued January 12, 1993. The window for paying the 7-½ year maintenance fee without surcharge extended from January 12, 2000 through July 12, 2000. The window for paying the 7-½ year maintenance fee with surcharge opened on July 13, 2000, and extended to July 12, 2001.

Patentee submits evidence in the form of a cancelled check to show that payment in the amount of $1,030 was submitted to the Office on or about January 12, 2001. Patentee further states that he first became aware that the Office considered the maintenance fee not paid, when he attempted to pay the 2004 fee. However, patentee does not enclose the petition fee.

RELEVANT REGULATIONS

§ 1.366 Submission of maintenance fees, provides that:

(c) In submitting maintenance fees and any necessary surcharges, identification of the patents for which maintenance

fees are being paid must include the patent number, and the application number of the United States application for the patent on which the maintenance fee is being paid. If the payment includes identification of only the patent number (i.e., does not identify the application number of the United States application for the patent on which the maintenance fee is being paid), the Office may apply the payment to the patent identified by patent number in the payment or may return the payment.

§ 1.377 Review of decision refusing to accept and record payment of a maintenance fee filed prior to expiration of patent, further provides that:

(a) Any patentee who is dissatisfied with the refusal of the Patent and Trademark Office to accept and record a maintenance fee which was filed prior to the expiration of the patent may petition the Commissioner to accept and record the maintenance fee.

(b) Any petition under this section must be filed within 2 months of the action complained of, or within such other time as may be set in the action complained of, and must be accompanied by the fee set forth in § 1.17(g). The petition may include a request that the petition fee be refunded if the refusal to accept and record the maintenance fee is determined to result from an error by the Patent and Trademark Office.

(c) Any petition filed under this section must comply with the requirements of §1.181(b) and must be signed by an attorney or agent registered to practice before the Patent and Trademark Office, or by the patentee, the assignee, or other party in interest.

ANALYSIS

The petition is not accompanied by the required fee under § 1.17(g) or a written authorization to charge the fee to a Deposit Account. Payment of the petition fee of $200 is a prerequisite to consideration of a petition under § 1.377.

Accordingly, the decision on petition under § 1.377 is **DISMISSED** without consideration on the merits.

However, under the circumstances, it is appropriate to advise *pro se* applicant as follows: Using petitioner's evidence, it has been confirmed that a payment of $1,030 was received in the Office in January of 2001. However, the required fees due at that time totalled $1,040. Specifically, the 7-½ surcharge was $975 and the late surcharge within 6 months was $65. Thus, accepting that $1,030 was submitted, it cannot be concluded that the required maintenance fee and surcharge to accept late maintenance fee were timely submitted. Accordingly, the patent is properly considered expired.

Patentee's response to be considered timely should be submitted within **TWO (2) MONTHS** from the mail date of this communication. Extensions of time under § 1.136(a) are not permitted. This period for reply is governed by § 1.181(f).

Alternatively, patentee is not precluded from seeking reinstatement of the patent under the stringent unavoidable standard. 37 CFR 1.378(b) provides that:

> Any petition to accept an unavoidably delayed payment of a maintenance fee filed under paragraph (a) of this section must include:
>
> (1) The required maintenance fee set forth in § 1.20 (e) through (g);
> (2) The surcharge set forth in § 1.20(i)(1); and
> (3) A showing that the delay was unavoidable since reasonable care was taken to ensure that the maintenance fee would be paid timely and that the petition was filed promptly after the patentee was notified of, or otherwise became aware of, the expiration of the patent. The showing must enumerate the steps taken to ensure timely payment of the maintenance fee, the date and the manner in which patentee became aware of the expiration of the patent, and the steps taken to file the petition promptly.

Any petition under 1.378(b) should be promptly filed.

Patentee is further advised that if the delayed payment of the maintenance fee is not ultimately accepted under 1.377 or 1.378, the maintenance fee and the surcharge set forth in § 1.20(i) (currently received $1,030) will be refunded following the decision on the petition for reconsideration, or after the expiration of the time for filing such a petition for

reconsideration, if none is filed. However, any petition fee ($200) under this section will not be refunded unless the refusal to accept and record the maintenance fee is determined to result from an error by the Patent and Trademark Office.

For patentee's convenience, a change of address form to correct the correspondence address for the patent is enclosed.

Further correspondence with respect to this decision should be addressed as follows:

By mail: Mail Stop Petition
Commissioner for Patents
P.O. Box 1450
Alexandria, VA 22313-1450

By fax: (571) 273-8300
ATTN: Office of Petitions

By hand: Customer Service Window
Randolph Building
401 Dulany Street
Alexandria, VA 22314

Telephone inquiries specific to this decision may be directed to the undersigned at (571) 272-3219.

Nancy Johnson
Senior Petitions Attorney
Office of Petitions

Enclosure: Change of Correspondence Address - Patent

UNITED STATES PATENT AND TRADEMARK OFFICE

COMMISSIONER FOR PATENTS
UNITED STATES PATENT AND TRADEMARK OFFICE
P.O. BOX 1450
ALEXANDRIA, VA 22313-1450
www.uspto.gov

Paper No. 10

JORGE TAYLOR
646 Saint Nicholas Avenue
Apt 102
New York, NY 10030

COPY MAILED

NOV 22 2005

OFFICE OF PETITIONS

In re Patent No. 5,178,701	:	
Jorge Taylor	:	
Issue Date: January 12, 1993	:	ON
Application No. 07/710,752	:	PETITION
Filed: May 31, 1991	:	
Title: CHEMICAL SEALANT DEVICE:		
FOR REPAIRING FLAT TIRES	:	

This is in response to the communication received April 1, 2005. Patentee requests reinstatement of the above-identified patent on the basis that the maintenance fee was timely paid.

The patent issued January 12, 1993. The window for paying the 7-½ year maintenance fee without surcharge extended from January 12, 2000 through July 12, 2000. The window for paying the 7-½ year maintenance fee with surcharge opened on July 13, 2000, and extended to July 12, 2001.

Patentee submits evidence in the form of a cancelled check to show that payment in the amount of $1,030 was submitted to the Office on or about January 12, 2001. Patentee further states that he first became aware that the Office considered the maintenance fee not paid, when he attempted to pay the 2004 fee. However, patentee does not enclose the petition fee.

RELEVANT REGULATIONS

§ 1.366 Submission of maintenance fees, provides that:

(c) In submitting maintenance fees and any necessary surcharges, identification of the patents for which maintenance

fees are being paid must include the patent number, and the application number of the United States application for the patent on which the maintenance fee is being paid. If the payment includes identification of only the patent number (i.e., does not identify the application number of the United States application for the patent on which the maintenance fee is being paid), the Office may apply the payment to the patent identified by patent number in the payment or may return the payment.

§ 1.377 Review of decision refusing to accept and record payment of a maintenance fee filed prior to expiration of patent, further provides that:

(a) Any patentee who is dissatisfied with the refusal of the Patent and Trademark Office to accept and record a maintenance fee which was filed prior to the expiration of the patent may petition the Commissioner to accept and record the maintenance fee.

(b) Any petition under this section must be filed within 2 months of the action complained of, or within such other time as may be set in the action complained of, and must be accompanied by the fee set forth in § 1.17(g). The petition may include a request that the petition fee be refunded if the refusal to accept and record the maintenance fee is determined to result from an error by the Patent and Trademark Office.

(c) Any petition filed under this section must comply with the requirements of §1.181(b) and must be signed by an attorney or agent registered to practice before the Patent and Trademark Office, or by the patentee, the assignee, or other party in interest.

ANALYSIS

The petition is not accompanied by the required fee under § 1.17(g) or a written authorization to charge the fee to a Deposit Account. Payment of the petition fee of $200 is a prerequisite to consideration of a petition under § 1.377.

Accordingly, the decision on petition under § 1.377 is **DISMISSED** without consideration on the merits.

However, under the circumstances, it is appropriate to advise *pro se* applicant as follows: Using petitioner's evidence, it has been confirmed that a payment of $1,030 was received in the Office in January of 2001. However, the required fees due at that time totalled $1,040. Specifically, the 7-½ surcharge was $975 and the late surcharge within 6 months was $65. Thus, accepting that $1,030 was submitted, it cannot be concluded that the required maintenance fee and surcharge to accept late maintenance fee were timely submitted. Accordingly, the patent is properly considered expired.

Patentee's response to be considered timely should be submitted within **TWO (2) MONTHS** from the mail date of this communication. Extensions of time under § 1.136(a) are not permitted. This period for reply is governed by § 1.181(f).

Alternatively, patentee is not precluded from seeking reinstatement of the patent under the stringent unavoidable standard. 37 CFR 1.378(b) provides that:

> Any petition to accept an unavoidably delayed payment of a maintenance fee filed under paragraph (a) of this section must include:
>
> (1) The required maintenance fee set forth in § 1.20 (e) through (g);
> (2) The surcharge set forth in § 1.20(i)(1); and
> (3) A showing that the delay was unavoidable since reasonable care was taken to ensure that the maintenance fee would be paid timely and that the petition was filed promptly after the patentee was notified of, or otherwise became aware of, the expiration of the patent. The showing must enumerate the steps taken to ensure timely payment of the maintenance fee, the date and the manner in which patentee became aware of the expiration of the patent, and the steps taken to file the petition promptly.

Any petition under 1.378(b) should be promptly filed.

Patentee is further advised that if the delayed payment of the maintenance fee is not ultimately accepted under 1.377 or 1.378, the maintenance fee and the surcharge set forth in § 1.20(i) (currently received $1,030) will be refunded following the decision on the petition for reconsideration, or after the expiration of the time for filing such a petition for

reconsideration, if none is filed. However, any petition fee ($200) under this section will not be refunded unless the refusal to accept and record the maintenance fee is determined to result from an error by the Patent and Trademark Office.

For patentee's convenience, a change of address form to correct the correspondence address for the patent is enclosed.

Further correspondence with respect to this decision should be addressed as follows:

By mail: Mail Stop Petition
Commissioner for Patents
P.O. Box 1450
Alexandria, VA 22313-1450

By fax: (571) 273-8300
ATTN: Office of Petitions

By hand: Customer Service Window
Randolph Building
401 Dulany Street
Alexandria, VA 22314

Telephone inquiries specific to this decision may be directed to the undersigned at (571) 272-3219.

Nancy Johnson
Senior Petitions Attorney
Office of Petitions

Enclosure: Change of Correspondence Address - Patent

UNITED STATES PATENT AND TRADEMARK OFFICE

Commissioner for Patents
United States Patent and Trademark Office
P.O. Box 1450
Alexandria, VA 22313-1450
www.uspto.gov

Paper No. 12

JORGE TAYLOR
646 Saint Nicholas Avenue
Apt 102
New York, NY 10030

COPY MAILED

JUN 21 2006

OFFICE OF PETITIONS

In re Patent No. 5,178,701	:	
Jorge Taylor	:	
Issue Date: January 12, 1993	:	ON
Application No. 07/710,752	:	PETITION
Filed: May 31, 1991	:	
Title: CHEMICAL SEALANT DEVICE	:	
FOR REPAIRING FLAT TIRES	:	

This is in response to the communication received June 15, 2006. Patentee disputes the requirement that a (refundable) fee be paid for consideration of a petition under 37 CFR 1.377.

The patent issued January 12, 1993. The window for paying the 7-½ year maintenance fee without surcharge extended from January 12, 2000 through July 12, 2000. The window for paying the 7-½ year maintenance fee with surcharge opened on July 13, 2000, and extended to January 12, 2001.

Patentee asserts that the fee in the amount of $1,030 was timely submitted. However, patentee does not enclose the petition fee. By decision mailed November 22, 2005[1], the petition was dismissed without consideration on the merits. Patentee was advised that a fee of $200, refundable if it was found that the failure to accept and record the maintenance fee was the fault of the Office, was required.

On instant response, patentee argues that the petition fee should be waived.

---

[1] The decision was originally mailed September 12, 2005; however, it was re-mailed on November 22, 2005 as the first address used was incorrect.

The petition fee is subject to refund. However, the payment of the fee is required for consideration of the petition. Patentee's arguments have been considered but not found persuasive that the fee should be waived.

Given the continued failure to submit the petition fee, the petition under § 1.377 is again **DISMISSED** without consideration on the merits.

Even if the fee were waived, patentee is advised that the maintenance fee would not be accepted as timely filed. As previously stated, the required fees due January 2001 totalled $1,040. However, patentee only submitted $1,030. More importantly, a closer review of the record reveals that the payment was received on January 17, 2001. A copy of the fee transmittal as originally filed is present in the application. The transmittal was dated January 12, 2001, but did not include a certificate of mailing. Thus, in addition to being deficient by $10, the response was filed 5 days after the end of the window for payment with surcharge. Thus, accepting that $1,030 was submitted on January 17, 2001, it cannot be concluded that the required maintenance fee and surcharge to accept late maintenance fee were timely submitted. Accordingly, the patent is properly considered expired.

Patentee's response to be considered timely should be submitted within **TWO (2) MONTHS** from the mail date of this communication. Extensions of time under § 1.136(a) are not permitted. This period for reply is governed by § 1.181(f).

Alternatively, patentee is not precluded from seeking reinstatement of the patent under the stringent unavoidable standard. 37 CFR 1.378(b) provides that:

> Any petition to accept an unavoidably delayed payment of a maintenance fee filed under paragraph (a) of this section must include:
>
> (1) The required maintenance fee set forth in § 1.20 (e) through (g);
> (2) The surcharge set forth in § 1.20(i)(1); and
> (3) A showing that the delay was unavoidable since reasonable care was taken to ensure that the maintenance fee would be paid timely and that the petition was filed

> promptly after the patentee was notified of, or otherwise became aware of, the expiration of the patent. The showing must enumerate the steps taken to ensure timely payment of the maintenance fee, the date and the manner in which patentee became aware of the expiration of the patent, and the steps taken to file the petition promptly.

Any petition under 1.378(b) should be promptly filed.

Patentee is further advised that if the delayed payment of the maintenance fee is not ultimately accepted under 1.377 or 1.378, the maintenance fee and the surcharge set forth in § 1.20(i) (currently received $1,030) will be refunded following the decision on the petition for reconsideration, or after the expiration of the time for filing such a petition for reconsideration, if none is filed. However, any petition fee ($200) under this section will not be refunded unless the refusal to accept and record the maintenance fee is determined to result from an error by the Patent and Trademark Office.

Patentee should advise the Office of the intention to or not to file a petition.

For patentee's convenience, a change of address form to correct the correspondence address for the patent is enclosed.

Further correspondence with respect to this decision should be addressed as follows:

By mail: Mail Stop Petition
Commissioner for Patents
P.O. Box 1450
Alexandria, VA 22313-1450

By fax: (571) 273-8300
ATTN: Office of Petitions

By hand: Customer Service Window
Randolph Building
401 Dulany Street
Alexandria, VA 22314

Telephone inquiries specific to this decision may be directed to the undersigned at (571) 272-3219.

Nancy Johnson
Senior Petitions Attorney
Office of Petitions

US005178701A

United States Patent [19]

Taylor

[11] **Patent Number: 5,178,701**

[45] **Date of Patent: Jan. 12, 1993**

[54] **CHEMICAL SEALANT DEVICE FOR REPAIRING FLAT TIRES**

[76] Inventor: **Jorge Taylor**, 104 Alcolade Dr. East, Shirley, N.Y. 11967

[21] Appl. No.: **710,752**

[22] Filed: **May 31, 1991**

[51] **Int. Cl.**[5] **B29C 73/22**; B60C 17/00

[52] **U.S. Cl.** **152/509**; 152/418; 152/516

[58] **Field of Search** 152/502, 503, 504, 505, 152/506, 507, 509, 337.1, 338.1, 341.1, 342.1, 418, 516, 518, 519, 520

[56] **References Cited**

U.S. PATENT DOCUMENTS

3,511,294 5/1970 Bepristis et al. 152/418
3,941,843 1/1976 Edwards et al. ..... 152/509 X
4,263,953 4/1981 Nicelli ..... 152/520 X

FOREIGN PATENT DOCUMENTS

2651520 5/1978 Fed. Rep. of Germany .
0015204 2/1979 Japan .

Primary Examiner—Michael W. Ball
Assistant Examiner—Francis J. Lorin
Attorney, Agent, or Firm—Richard L. Miller

[57] **ABSTRACT**

A chemical sealant device is provided for repairing a flat tire of a wheel, which consists of a rim for supporting and fitting a tire thereabout. A first mechanism is on the interior of the rim for carrying a portion of the load of the wheel after the tire is punctured and becomes partially flat. A second mechanism is within the first carrying mechanism for releasing at predetermined intervals of rotation of the wheel, tire chemical sealant and compressed air into the tire so that eventually the tire will be repaired and tire pressure will be at least partially restored, whereby road damage to the tire will be prevented.

4 Claims, 2 Drawing Sheets

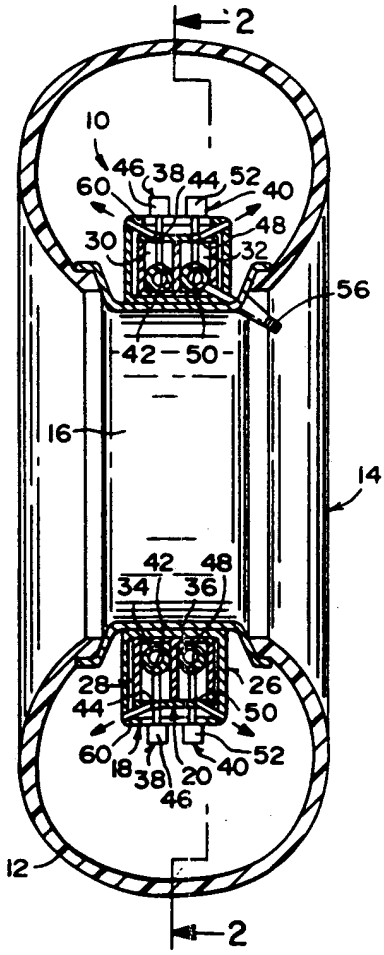

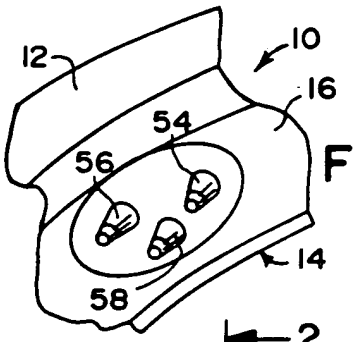

Fig. 5

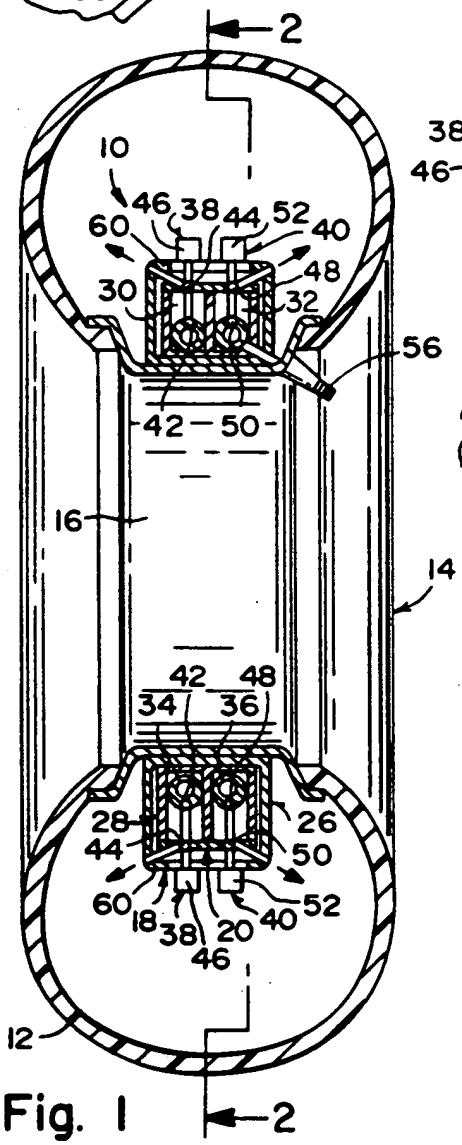

Fig. 1

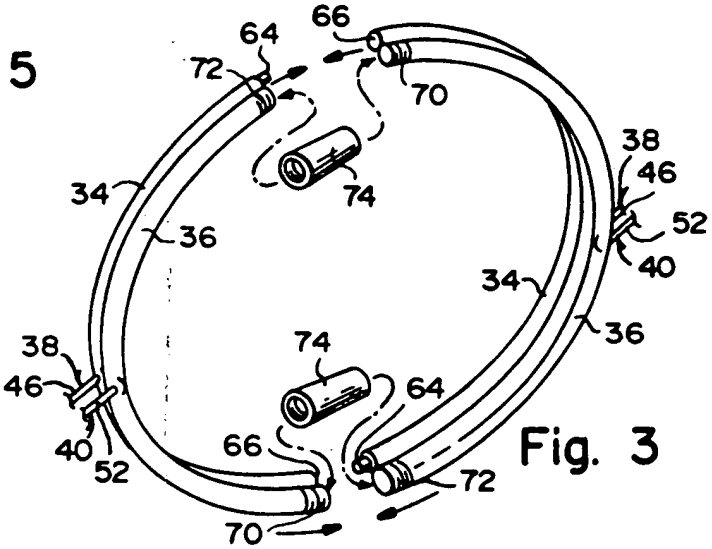

Fig. 3

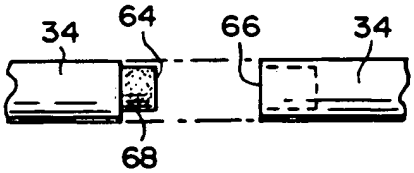

Fig. 4

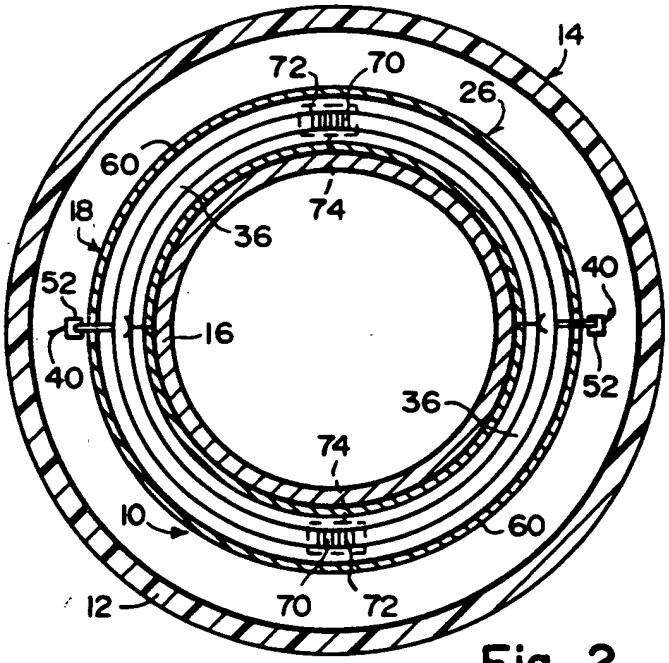

Fig. 2

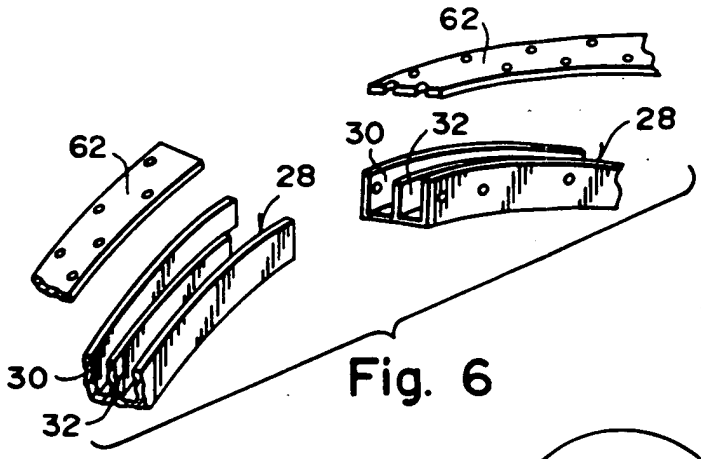

Fig. 6

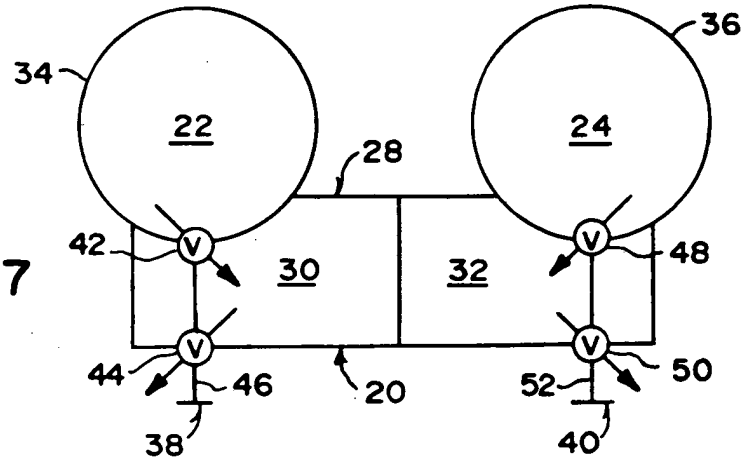

Fig. 7

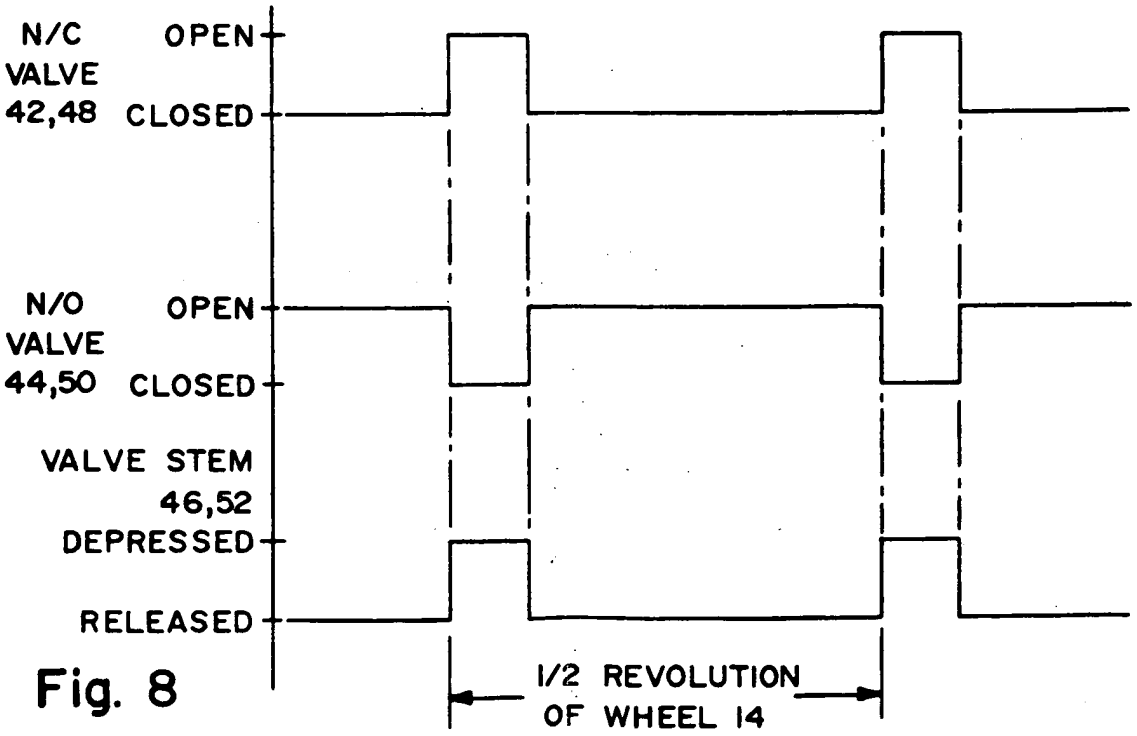

Fig. 8

CHEMICAL SEALANT DEVICE FOR REPAIRING FLAT TIRES

BACKGROUND OF THE INVENTION

The instant invention relates generally to tire repair and more specifically it relates to a chemical sealant device for repairing a flat tire automatically while the tire remains in use on the vehicle.

Numerous tire repair kits have been provided in the prior art that are adapted to remove the tire from the rim and plug up punctures in the tire. For example, U.S. Pat. Nos. 3,963,417 to Placek; 4,317,692 to Niconchuk and 4,710,249 to Roberts all are illustrative of such prior art. While these units may be suitable for the particular purpose to which they address, they would not be as suitable for the purpose of the present invention as hereafter described.

SUMMARY OF THE INVENTION

A primary object of the present invention is to provide a chemical sealant device for repairing a flat tire that will overcome the shortcomings of the prior art devices.

Another object is to provide a chemical sealant device for repairing a flat tire that includes a valve system built into the tire wheel rim to release at predetermined intervals of rotation the chemical sealant and compressed air when the tire is punctured, thereby preventing a road hazard accident.

An additional object is to provide a chemical sealant device for repairing a flat tire that does away with the fastidious time consuming task of fixing the flat before being able to safely drive.

A further object is to provide a chemical sealant device for repairing a flat tire that is simple and easy to use.

A still further object is to provide a chemical sealant device for repairing a flat tire that is economical in cost to manufacture.

Further objects of the invention will appear as the description proceeds.

To the accomplishment of the above and related objects, this invention may be embodied in the form illustrated in the accompanying drawings, attention being called to the fact, however, that the drawings are illustrative only and that changes may be made in the specific construction illustrated and described within the scope of the appended claims.

BRIEF DESCRIPTION OF THE DRAWING FIGURES

The figures in the drawings are briefly described as follows:

FIG. 1 is a diagrammatic cross sectional view of a wheel with parts broken away with the instant invention installed therein;

FIG. 2 is another diagrammatic cross sectional view taken on line 2—2 of FIG. 1;

FIG. 3 is a diagrammatic perspective view of the chemical and air vessels of the instant invention;

FIG. 4 is a diagrammatic elevational view showing the securement mechanism for the tire chemical sealant vessel;

FIG. 5 is a perspective view with parts broken away of the fill inlets;

FIG. 6 is a diagrammatic perspective view with parts broken away of the inner torus member;

FIG. 7 is a diagrammatic representation of the valve system; and

FIG. 8 is a timing diagram indicating the sequence of events in which material is released by the valve system.

DETAILED DESCRIPTION OF THE PREFERRED EMBODIMENTS

Turning now descriptively to the drawings, in which similar reference characters denote similar elements throughout the several views, the Figures illustrate a chemical sealant device **10** for repairing a flat tire **12** of a wheel **14**, which consists of a rim **16** for supporting and fitting the tire **12** thereabout. A mechanism **18** is on the interior of the rim **16** for carrying a portion of the load of the wheel **14** after the tire **12** is punctured and becomes partially flat. Another mechanism **20** is within the carrying mechanism **18**, for releasing at predetermined intervals of rotation of the wheel **14**, tire chemical sealant **22** and compressed air **24** into the tire **12** so that eventually the tire **12** will be repaired and tire pressure will be at least partially restored, whereby road damage to the tire will be prevented.

The carrying mechanism **18** includes an outer hollow torus member **26** affixed onto the interior surface of the rim **16**. The releasing mechanism **20** includes an inner hollow torus member **28** having dual side by side annular chambers **30** and **32**, whereby the inner hollow torus member **28** is disposed within the outer hollow torus member **26**. A first annular vessel **34** is placed into the first annular chamber **30** of the inner hollow torus member **28**. The first annular vessel **34** holds the tire chemical sealant **22** therein. A second annular vessel **36** is placed into the second annular chamber **32** of the inner hollow torus member **28**. The second annular vessel **36** holds the compressed air **24** therein. A first valve system **38** is connected to the first annular vessel **34**, so that when the first valve system **38** is activated by the rotation of the wheel **14**, it will release some of the tire chemical sealant **22** into the first annular chamber **30** of the inner hollow torus member **28**. When the first valve system **38** is deactivated by the continued rotation of the wheel **14**, it will release the tire chemical sealant **22** from the first annular chamber **30** of the inner hollow torus member **28** into the tire **12** to seal the puncture. A second valve system **40** is connected to the second annular vessel **36**, so that when the second valve system **40** is activated by the rotation of the wheel **14**, it will release some of the compressed air **24** into the second annular chamber **32** of the inner hollow torus member **28**. When the second valve system **40** is deactivated by the continued rotation of the wheel **14**, it will release the compressed air **24** from the second annular chamber **32** of the inner hollow torus member **28** into the tire **12** to inflate the tire **12**.

The first valve system **38** includes a normally closed valve **42** between the first annular vessel **34** and the first annular chamber **30** of the inner hollow torus member **28**. A normally opened valve **44** is between the first annular chamber **30** of the inner hollow torus member **28** and the interior of the tire **12**. A valve stem **46** is connected to the normally closed valve **42** and the normally opened valve **44** and extends outwardly from the outer hollow torus member **26**. When the wheel **14** rotates the valve stem **46** will be depressed and released at the predetermined intervals. The second valve system **40** includes a normally closed valve **48** between the

second annular vessel **36** and the second annular chamber **32** of the inner hollow torus member **28**. A normally opened valve **50** is between the second annular chamber **32** of the inner hollow torus member **28** and the interior of the tire **12**. A valve stem **52** is connected to the normally closed valve **48** and the normally opened valve **50** and extends from the outer hollow torus member **26**. When the wheel **14** rotates the valve stem **52** will be depressed and released at the predetermined intervals.

FIG. **8** is a timing diagram indicating the sequence of events that occur during a half of rotation of the tire when it has become sufficiently flat as to cause the instant invention to become operative. It is to be observed that a short pulse duration occur when the valve systems and the tire in the vicinity of the valve systems is depressed by coming in to contact with the roads surface.

The chemical sealant device **10** further includes a first inlet valve **54** on the rim **16**, connected to the first annular vessel **34** so that the first annular vessel **34** can be filled with the tire chemical sealant **22**. A second inlet valve **56** on the rim **16**, is connected to the second annular vessel **36** so that the second annular vessel **36** can be filled with the compressed air **24**. A third inlet valve **58** on the rim **16** is connected to the tire **12** so that the tire **12** can be normally filled with air.

For assembly, the outer hollow torus member **26** is split into two parts and has cover plates **60**, while the inner hollow torus member **28** is also split into two parts and has cover plates **62**. The first annular vessel **34** and the second annular vessel **36** are also split into two parts. The first annular vessel **34** contains male plugs **64** and female sockets **66** so that adhesive **68** can be applied onto the plugs **64** to properly seal the two parts together. Each part of the second annular vessel **36** contains right handed threads **70** and left handed threads **72** at opposite ends so that each of the two connectors **74** and be threaded thereto to connect the two parts together.

While certain novel features of this invention have been shown and described and are pointed out in the annexed claims, it will be understood that various omissions, substitutions and changes in the forms and details of the device illustrated and in its operation can be made by those skilled in the art without departing from the spirit of the invention.

What is claimed is:

1. A chemical sealant device for repairing a flat tire of a wheel, comprising:

a) a rim for supporting and fitting a tire thereabout;

b) carrying means on the interior of said rim for carrying a portion of the load of the wheel after the tire is punctured and becomes partially flat, wherein said carrying means includes an outer hollow torus member affixed onto the interior surface of said rim; and

c) releasing means within said carrying means, for releasing at predetermined intervals of rotation of the wheel, tire chemical sealant and compressed air into the tire so that eventually the tire will be repaired and tire pressure will be at least partially restored, whereby road damage to the tire will be prevented wherein said releasing means includes:

i) an inner hollow torus member having dual side by side annular chambers, whereby said inner hollow torus member is disposed within said outer hollow torus member;

ii) a first annular vessel placed into the first annular chamber of said inner hollow torus member, said first annular vessel holds the tire chemical sealant therein;

iii) a second annular vessel placed into the second annular chamber of said inner hollow torus member, said second annular vessel holds the compressed air therein;

iv) a first valve system connected to said first annular vessel, so that when said first valve system is activated by the rotation of the wheel it will release some of the tire chemical sealant into the first annular chamber of said inner hollow torus member and when said first valve system is deactivated by the continued rotation of the wheel it will release the tire chemical sealant from the first annular chamber of said inner hollow torus member into the tire to seal the puncture; and

v) a second valve system connected to said second annular vessel, so that when said second valve system is activated by the rotation of the wheel it will release some of the compressed air into the second annular chamber of said inner hollow torus member and when said second valve system is deactivated by the continued rotation of the wheel it will release the compressed air from the second annular chamber of said inner hollow torus member into the tire to at least partially restore tire pressure.

2. A chemical sealant device for repairing a flat tire of a wheel as recited in claim **1**, wherein said first valve system includes:

a) a normally closed valve between said first annular vessel and the first annular chamber of said inner hollow torus member;

b) a normally opened valve between the first annular chamber of said inner hollow torus member and the interior of the tire; and

c) a valve stem connected to said normally closed valve and said normally opened valve and extending outwardly from said outer hollow torus member so that when the wheel rotates said valve stem will be depressed and released at the predetermined intervals.

3. A chemical sealant device for repairing a flat tire of a wheel as recited in claim **2**, wherein said second valve system includes:

a) a normally closed valve between said second annular vessel and the second annular chamber of said inner hollow torus member;

b) a normally opened valve between the second annular chamber of said inner hollow torus member and the interior of the tire; and

c) a valve system connected to said normally closed valve and said normally opened valve and extending outwardly from said outer hollow torus member so that when the wheel rotates said valve stem will be depressed and released at the predetermined intervals.

4. A chemical sealant device for repairing a flat tire of a wheel as recited in claim **3**, further including:

a) a first inlet valve on the rim connected to said first annular vessel so that said first annular vessel can be filled with the tire chemical sealant;

b) a second inlet valve on the rim connected to said second annular vessel so that said second annular vessel can be filled with the compressed air; and

c) a third inlet valve on the rim connected to the tire so that the tire can be normally filled with air.

* * * * *

UNITED STATES PATENT AND TRADEMARK OFFICE

Commissioner for Patents
United States Patent and Trademark Office
P.O. Box 1450
Alexandria, VA 22313-1450
www.uspto.gov

THOMAS A. GALLAGHER
100 Green Street, 3RD Floor
San Francisco, CA. 94111-1302

COPY MAILED

MAR 3 0 2009

OFFICE OF PETITIONS

In re Patent No. 5,151,783	:	
Issue Date: September 29, 1992	:	
Application No. 07/710,823	:	DECISION ON PETITION
Filed: June 5, 1991	:	
Inventor: Yves C. Faroudja	:	

This is a decision on the petitions, filed August 15, 2008, and October 7, 2008, pursuant to 37 CFR §§ 1.59(b), and 1.183. The petition is being treated as a petition under 37 CFR §1.182 to invalidate an assignment previously recorded against the above-identified patent.

The petition under 37 CFR § 1.183 is **dismissed as premature**.

The petition under 37 CFR § 1.182 is **dismissed**.

Any reply must be submitted within TWO MONTHS from the mail date of this decision. Extensions of time under 37 CFR § 1.136(a) are permitted. This is not a final agency action within the meaning of 5 U.S.C. § 704.

Petitioner has requested that the assignment record be amended to reflect that petitioner is the true owner of the above-noted patent. In particular petitioner requests expungement of purportedly erroneous assignment documents at Reel 020817, Frame 0243, so that petitioner Yves C. Faroudja, may be identified as the true and correct owner of the '385 patent. Petitioner submits that the assignment submitted on April 9, 2008 was submitted with an improper document attached and therefore request expungement of the assignment.

A review of the complete file history in this case indicates that there is no petition decision mailed September 19, 2008, as alleged in petitioner's Request for Reconsideration under 37 CFR § 1.183. Hence the petition under 37 CFR § 1.183 petition is dismissed as being premature.

As discussed in section 323.01(d) of the Manual of Patent Examining Procedure (MPEP), petitions to correct, modify or "expunge" assignment records are granted only if the petitioner can prove that:

(A) the normal corrective procedures outlined in MPEP § 323.01(a) through § 323.01(c) will not provide the petitioner with adequate relief; and

(B) the integrity of the assignment records will not be affected by granting the petition.

Petitioner has not proven either item A or B.

In regard to item A, there is no evidence of record that petitioner has attempted or considered any of the corrective procedures outlined in MPEP § 323.01(a) through § 323.01(c). Also, there is no explanation of record as to why none of these procedures would provide adequate relief.

Petitioner seeks an extraordinary remedy, properly addressed under 37 CFR § 1.182. The USPTO will not normally resort to an extraordinary remedy under 37 CFR § 1.182 if the rules of practice and the procedures before the USPTO already provide an avenue for the requested relief. See Cantello v. Rasmussen, 220 USPQ 664, (Comm'r Pats. 1982).

As background, the USPTO simply acts in a ministerial capacity in recording documents that have been submitted for recordation. See 35 USC 261 and 37 CFR § 3.11. However, the recording of a document pursuant to 37 CFR § 3.11 is **not** a determination by the USPTO of the validity of the document *per se* or the effect that document has on the title to a patent or application. See 37 CFR § 3.54. Moreover, it is USPTO policy to maintain a complete history of claimed interests in a given property, and, as such, a recorded assignment document will be retained, even if it is subsequently found to be invalid. In re Raney, 24 USPQ2d 1713 (Comm'r Pat. 1992).

As set forth in MPEP 323, an error in a recorded assignment is not corrected by invalidating the previous document, but by simply submitting a "corrective document". The "corrective document" must include 1) a copy of the original assignment document with the corrections made therein. The corrections must be initialed and dated by the party conveying the interest; and 2) a new Recordation Form Cover Sheet (form PTO-1595). The new recordation form cover sheet must identify the submission as a "corrective document" submission and indicate the reel and frame number where the incorrectly recorded assignment document appears. The person signing the new recordation form cover sheet must state that the information provided on the new cover sheet is true and correct and that any copy submitted is a true copy of the original document. The original cover sheet should be submitted with the corrective document. The corrective document will be recorded and given a new reel and frame number and recording date. The recording fee set forth in 37 CFR 1.21(h) is required for each patent application and patent against which the corrective document is being recorded. See MPEP § 302.06. Corrections may be made on the original assignment document, for example, by lining out an incorrect patent or application number in a merger or change of name (see MPEP § 314).

Therefore, the rules of practice and the procedures before the USPTO provide an avenue for the requested relief without relying upon extraordinary measures. As a request for the Office to invalidate an assignment is both extraordinary and contrary to USPTO policy, this petition must be dismissed.

In regard to item B, the statements submitted in support of the petition to expunge fails to establish that expungement will not affect the assignment records in this instance. The

assignment recorded in the USPTO assignment records indicates that Faroudja Laboratories, Inc. has some rights with regard to the above mentioned patent, which suggests that the recordation may have been proper. Petitioner should note that recordation is available for numerous documents related to a patent, not just the assignment of the entire right, title and interest in the patent. See at least MPEP § 313. Moreover, the USPTO does not determine the extent of rights transferred by the assignment papers or any recorded document. Such a determination is made by a court of relevant jurisdiction. No evidence is of record establishing that the assignment was recorded improperly. Absent sufficient evidence to support the requested expungement, the integrity of the assignment records will not be disturbed by the USPTO.

In addition, the petition fee paid is not sufficient. A petition under 37 CFR § 1.182 requires the payment of $400.00. However, only $200.00 has been paid due to the erroneous assumption that the petition was properly filed under 37 CFR § 1.59. A petition under 37 CFR § 1.59 applies to application files, not assignment records. The $200.00 payment has been credited to petitioner's Deposit Account 50-4481. A petition to expunge assignment documents is properly addressed under 37 CFR § 1.182 and a fee of $400.00 is required. As authorized, the required fee of $400.00 has been charged to petitioner's Deposit Account 50-4481.

There is no indication that the person signing the petition was ever given a power of attorney or authorization of agent to prosecute the application. If the person signing the petition desires to receive future correspondence regarding this application, the appropriate power of attorney or authorization of agent must be submitted. A courtesy copy of this decision is being mailed to the person signing the petition; however, all future correspondence will be directed to the address currently of record until appropriate instructions are received.

Telephone inquiries concerning this communication should be directed to the undersigned at (571)272-0602.

Thurman K. Page
Petitions Examiner
Office of Petitions

cc: Michael J. Ferrazaro
P.O. Box 1687
Cupertino, CA 95015-1687

UNITED STATES PATENT AND TRADEMARK OFFICE

Commissioner for Patents
United States Patent and Trademark Office
P.O. Box 1450
Alexandria, VA 22313-1450
www.uspto.gov

LAW OFFICES OF JAMES E. EAKIN
1301 Shoreway Road, Suite 324
Belmont, CA. 94002-4714

COPY MAILED

MAR 3 0 2009

OFFICE OF PETITIONS

In re Patent No. 5,136,385	:	
Issue Date: August 4, 1992	:	
Application No. 07/712,423	:	DECISION ON PETITION
Filed: June 10, 1991	:	
Inventor: Jack Campbell	:	

This is a decision on the petitions, filed August 15, 2008, and October 7, 2008, pursuant to 37 CFR §§ 1.59(b), and 1.183. The petition is being treated as a petition under 37 CFR §1.182 to invalidate an assignment previously recorded against the above-identified patent.

The petition under 37 CFR § 1.183 is **dismissed as premature**.

The petition under 37 CFR § 1.182 is **dismissed**.

Any reply must be submitted within TWO MONTHS from the mail date of this decision. Extensions of time under 37 CFR § 1.136(a) are permitted. This is not a final agency action within the meaning of 5 U.S.C. § 704.

Petitioner has requested that the assignment record be amended to reflect that petitioner is the true owner of the above-noted patent. In particular petitioner requests expungement of purportedly erroneous assignment documents at Reel 020817, Frame 0243, so that petitioner Yves C. Faroudja, may be identified as the true and correct owner of the '385 patent. Petitioner submits that the assignment submitted on April 9, 2008 was submitted with an improper document attached and therefore request expungement of the assignment.

A review of the complete file history in this case indicates that there is no petition decision mailed September 19, 2008, as alleged in petitioner's Request for Reconsideration under 37 CFR § 1.183. Hence the petition under 37 CFR § 1.183 petition is dismissed as being premature.

As discussed in section 323.01(d) of the Manual of Patent Examining Procedure (MPEP), petitions to correct, modify or "expunge" assignment records are granted only if the petitioner can prove that:

(A) the normal corrective procedures outlined in MPEP § 323.01(a) through § 323.01(c) will not provide the petitioner with adequate relief; and

(B) the integrity of the assignment records will not be affected by granting the petition.

Petitioner has not proven either item A or B.

In regard to item A, there is no evidence of record that petitioner has attempted or considered any of the corrective procedures outlined in MPEP § 323.01(a) through § 323.01(c). Also, there is no explanation of record as to why none of these procedures would provide adequate relief.

Petitioner seeks an extraordinary remedy, properly addressed under 37 CFR § 1.182. The USPTO will not normally resort to an extraordinary remedy under 37 CFR § 1.182 if the rules of practice and the procedures before the USPTO already provide an avenue for the requested relief. See Cantello v. Rasmussen, 220 USPQ 664, (Comm'r Pats. 1982).

As background, the USPTO simply acts in a ministerial capacity in recording documents that have been submitted for recordation. See 35 USC 261 and 37 CFR § 3.11. However, the recording of a document pursuant to 37 CFR § 3.11 is **not** a determination by the USPTO of the validity of the document *per se* or the effect that document has on the title to a patent or application. See 37 CFR § 3.54. Moreover, it is USPTO policy to maintain a complete history of claimed interests in a given property, and, as such, a recorded assignment document will be retained, even if it is subsequently found to be invalid. In re Raney, 24 USPQ2d 1713 (Comm'r Pat. 1992).

As set forth in MPEP 323, an error in a recorded assignment is not corrected by invalidating the previous document, but by simply submitting a "corrective document". The "corrective document" must include 1) a copy of the original assignment document with the corrections made therein. The corrections must be initialed and dated by the party conveying the interest; and 2) a new Recordation Form Cover Sheet (form PTO-1595). The new recordation form cover sheet must identify the submission as a "corrective document" submission and indicate the reel and frame number where the incorrectly recorded assignment document appears. The person signing the new recordation form cover sheet must state that the information provided on the new cover sheet is true and correct and that any copy submitted is a true copy of the original document. The original cover sheet should be submitted with the corrective document. The corrective document will be recorded and given a new reel and frame number and recording date. The recording fee set forth in 37 CFR 1.21(h) is required for each patent application and patent against which the corrective document is being recorded. See MPEP § 302.06. Corrections may be made on the original assignment document, for example, by lining out an incorrect patent or application number in a merger or change of name (see MPEP § 314).

Therefore, the rules of practice and the procedures before the USPTO provide an avenue for the requested relief without relying upon extraordinary measures. As a request for the Office to invalidate an assignment is both extraordinary and contrary to USPTO policy, this petition must be dismissed.

In regard to item B, the statements submitted in support of the petition to expunge fails to establish that expungement will not affect the assignment records in this instance. The

assignment recorded in the USPTO assignment records indicates that Faroudja Laboratories, Inc. has some rights with regard to the above mentioned patent, which suggests that the recordation may have been proper. Petitioner should note that recordation is available for numerous documents related to a patent, not just the assignment of the entire right, title and interest in the patent. See at least MPEP § 313. Moreover, the USPTO does not determine the extent of rights transferred by the assignment papers or any recorded document. Such a determination is made by a court of relevant jurisdiction. No evidence is of record establishing that the assignment was recorded improperly. Absent sufficient evidence to support the requested expungement, the integrity of the assignment records will not be disturbed by the USPTO.

In addition, the petition fee paid is not sufficient. A petition under 37 CFR § 1.182 requires the payment of $400.00. However, only $200.00 has been paid due to the erroneous assumption that the petition was properly filed under 37 CFR § 1.59. A petition under 37 CFR § 1.59 applies to application files, not assignment records. The $200.00 payment has been credited to petitioner's Deposit Account 50-4481. A petition to expunge assignment documents is properly addressed under 37 CFR § 1.182 and a fee of $400.00 is required. As authorized, the required fee of $400.00 has been charged to petitioner's Deposit Account 50-4481.

There is no indication that the person signing the petition was ever given a power of attorney or authorization of agent to prosecute the application. If the person signing the petition desires to receive future correspondence regarding this application, the appropriate power of attorney or authorization of agent must be submitted. A courtesy copy of this decision is being mailed to the person signing the petition; however, all future correspondence will be directed to the address currently of record until appropriate instructions are received.

Telephone inquiries concerning this communication should be directed to the undersigned at (571)272-0602.

Thurman K. Page
Petitions Examiner
Office of Petitions

cc: Michael J. Ferrazaro
P.O. Box 1687
Cupertino, CA 95015-1687

UNITED STATES PATENT AND TRADEMARK OFFICE

O I P E
APR 0 9 2009
PATENT & TRADEMARK OFFICE

Commissioner for Patents
United States Patent and Trademark Office
P.O. Box 1450
Alexandria, VA 22313-1450
www.uspto.gov

LAW OFFICES OF JAMES E. EAKIN
1301 Shoreway Road, Suite 324
Belmont, CA. 94002-4714

COPY MAILED

MAR 3 0 2009

OFFICE OF PETITIONS

In re Patent No. 5,136,385	:	
Issue Date: August 4, 1992	:	
Application No. 07/712,423	:	DECISION ON PETITION
Filed: June 10, 1991	:	
Inventor: Jack Campbell	:	

This is a decision on the petitions, filed August 15, 2008, and October 7, 2008, pursuant to 37 CFR §§ 1.59(b), and 1.183. The petition is being treated as a petition under 37 CFR §1.182 to invalidate an assignment previously recorded against the above-identified patent.

The petition under 37 CFR § 1.183 is **dismissed as premature.**

COMPLETED

The petition under 37 CFR § 1.182 is **dismissed.**

Any reply must be submitted within TWO MONTHS from the mail date of this decision. Extensions of time under 37 CFR § 1.136(a) are permitted. This is not a final agency action within the meaning of 5 U.S.C. § 704.

Petitioner has requested that the assignment record be amended to reflect that petitioner is the true owner of the above-noted patent. In particular petitioner requests expungement of purportedly erroneous assignment documents at Reel 020817, Frame 0243, so that petitioner Yves C. Faroudja, may be identified as the true and correct owner of the '385 patent. Petitioner submits that the assignment submitted on April 9, 2008 was submitted with an improper document attached and therefore request expungement of the assignment.

A review of the complete file history in this case indicates that there is no petition decision mailed September 19, 2008, as alleged in petitioner's Request for Reconsideration under 37 CFR § 1.183. Hence the petition under 37 CFR § 1.183 petition is dismissed as being premature.

As discussed in section 323.01(d) of the Manual of Patent Examining Procedure (MPEP), petitions to correct, modify or "expunge" assignment records are granted only if the petitioner can prove that:

(A) the normal corrective procedures outlined in MPEP § 323.01(a) through § 323.01(c) will not provide the petitioner with adequate relief; and

(B) the integrity of the assignment records will not be affected by granting the petition.

Petitioner has not proven either item A or B.

In regard to item A, there is no evidence of record that petitioner has attempted or considered any of the corrective procedures outlined in MPEP § 323.01(a) through § 323.01(c). Also, there is no explanation of record as to why none of these procedures would provide adequate relief.

Petitioner seeks an extraordinary remedy, properly addressed under 37 CFR § 1.182. The USPTO will not normally resort to an extraordinary remedy under 37 CFR § 1.182 if the rules of practice and the procedures before the USPTO already provide an avenue for the requested relief. See Cantello v. Rasmussen, 220 USPQ 664, (Comm'r Pats. 1982).

As background, the USPTO simply acts in a ministerial capacity in recording documents that have been submitted for recordation. See 35 USC 261 and 37 CFR § 3.11. However, the recording of a document pursuant to 37 CFR § 3.11 is **not** a determination by the USPTO of the validity of the document *per se* or the effect that document has on the title to a patent or application. See 37 CFR § 3.54. Moreover, it is USPTO policy to maintain a complete history of claimed interests in a given property, and, as such, a recorded assignment document will be retained, even if it is subsequently found to be invalid. In re Raney, 24 USPQ2d 1713 (Comm'r Pat. 1992).

As set forth in MPEP 323, an error in a recorded assignment is not corrected by invalidating the previous document, but by simply submitting a "corrective document". The "corrective document" must include 1) a copy of the original assignment document with the corrections made therein. The corrections must be initialed and dated by the party conveying the interest; and 2) a new Recordation Form Cover Sheet (form PTO-1595). The new recordation form cover sheet must identify the submission as a "corrective document" submission and indicate the reel and frame number where the incorrectly recorded assignment document appears. The person signing the new recordation form cover sheet must state that the information provided on the new cover sheet is true and correct and that any copy submitted is a true copy of the original document. The original cover sheet should be submitted with the corrective document. The corrective document will be recorded and given a new reel and frame number and recording date. The recording fee set forth in 37 CFR 1.21(h) is required for each patent application and patent against which the corrective document is being recorded. See MPEP § 302.06. Corrections may be made on the original assignment document, for example, by lining out an incorrect patent or application number in a merger or change of name (see MPEP § 314).

Therefore, the rules of practice and the procedures before the USPTO provide an avenue for the requested relief without relying upon extraordinary measures. As a request for the Office to invalidate an assignment is both extraordinary and contrary to USPTO policy, this petition must be dismissed.

In regard to item B, the statements submitted in support of the petition to expunge fails to establish that expungement will not affect the assignment records in this instance. The

assignment recorded in the USPTO assignment records indicates that Faroudja Laboratories, Inc. has some rights with regard to the above mentioned patent, which suggests that the recordation may have been proper. Petitioner should note that recordation is available for numerous documents related to a patent, not just the assignment of the entire right, title and interest in the patent. See at least MPEP § 313. Moreover, the USPTO does not determine the extent of rights transferred by the assignment papers or any recorded document. Such a determination is made by a court of relevant jurisdiction. No evidence is of record establishing that the assignment was recorded improperly. Absent sufficient evidence to support the requested expungement, the integrity of the assignment records will not be disturbed by the USPTO.

In addition, the petition fee paid is not sufficient. A petition under 37 CFR § 1.182 requires the payment of $400.00. However, only $200.00 has been paid due to the erroneous assumption that the petition was properly filed under 37 CFR § 1.59. A petition under 37 CFR § 1.59 applies to application files, not assignment records. The $200.00 payment has been credited to petitioner's Deposit Account 50-4481. A petition to expunge assignment documents is properly addressed under 37 CFR § 1.182 and a fee of $400.00 is required. As authorized, the required fee of $400.00 has been charged to petitioner's Deposit Account 50-4481.

There is no indication that the person signing the petition was ever given a power of attorney or authorization of agent to prosecute the application. If the person signing the petition desires to receive future correspondence regarding this application, the appropriate power of attorney or authorization of agent must be submitted. A courtesy copy of this decision is being mailed to the person signing the petition; however, all future correspondence will be directed to the address currently of record until appropriate instructions are received.

Telephone inquiries concerning this communication should be directed to the undersigned at (571)272-0602.

Thurman K. Page
Petitions Examiner
Office of Petitions

cc: Michael J. Ferrazaro
P.O. Box 1687
Cupertino, CA 95015-1687

Under the Paperwork Reduction Act of 1995, no persons are required to respond to a collection of information unless it displays valid OMB control number.

PETITION TO ACCEPT UNINTENTIONALLY DELAYED PAYMENT OF MAINTENANCE FEE IN AN EXPIRED PATENT (37 CFR 1.378(c))

Patent Number	Issue Date (YYYY-MM-DD)	Application Number	Filing Date (YYYY-MM-DD)	Docket Number (if applicable)
5457590	1995-10-10	07712897	1991-06-11	ID 056407

CAUTION: Maintenance fee (and surcharge, if any) payment must correctly identify: (1) the patent number and (2) the application number of the actual U.S. application leading to issuance of that patent to ensure the fee(s) is/are associated with the correct patent. 37 CFR 1.366(c) and (d).

SMALL ENTITY
☐ Patentee claims, or has previously claimed, small entity status. See 37 CFR 1.27.

LOSS OF ENTITLEMENT TO SMALL ENTITY STATUS
☐ Patentee is no longer entitled to small entity status. See 37 CFR 1.27(g)

NOT Small Entity			Small Entity		
	Fee	Code		Fee	Code
○	3 ½ year	(1551)	○	3 ½ year	(2551)
○	7 ½ year	(1552)	○	7 ½ year	(2552)
◉	11 ½ year	(1553)	○	11 ½ year	(2553)

SURCHARGE
The surcharge required by 37 CFR 1.20(i)(2) (Fee Code 1558) must be paid as a condition of accepting unintentionally delayed payment of the maintenance fee.

MAINTENANCE FEE (37 CFR 1.20(e)-(g))
The appropriate maintenance fee must be submitted with this petition.

STATEMENT
THE UNDERSIGNED CERTIFIES THAT THE DELAY IN PAYMENT OF THE MAINTENANCE FEE TO THIS PATENT WAS UNINTENTIONAL

PETITIONER(S) REQUEST THAT THE DELAYED PAYMENT OF THE MAINTENANCE FEE BE ACCEPTED AND THE PATENT REINSTATED

THIS PORTION MUST BE COMPLETED BY THE SIGNATORY OR SIGNATORIES

37 CFR 1.378(d) states: "Any petition under this section must be signed by an attorney or agent registered to practice before the Patent and Trademark Office, or by the patentee, the assignee, or other party in interest."

I certify, in accordance with 37 CFR 1.4(d)(4) that I am

◉ An attorney or agent registered to practice before the Patent and Trademark Office

○ A sole patentee

○ A joint patentee; I certify that I am authorized to sign this submission on behalf of all the other patentees.

○ A joint patentee; all of whom are signing this e-petition

○ The assignee of record of the entire interest

Patent Practitioner			
A signature of the applicant or representative is required in accordance with 37 CFR 1.33 and 10.18. Please see 37 CFR 1.4(d) for the form of the signature			
Signature	/DJCushing/	Date (YYYY-MM-DD)	2007-11-15
Name	David J. Cushing	Registration Number	28703

This collection of information is required by 37 CFR 1.378(c). The information is required to obtain or retain a benefit by the public which is to file (and by the USPTO to process) an application. Confidentiality is governed by 35 U.S.C. 122 and 37 CFR 1.11 and 1.14. This collection is estimated to take 1 hour to complete, including gathering, preparing, and submitting the completed application form to the USPTO. Time will vary depending upon the individual case. Any comments on the amount of time you require to complete this form and/ or suggestions for reducing this burden, should be sent to the Chief Information Officer, U.S. Patent and Trademark Office, U.S. Department of Commerce, P.O. Box 1450, Alexandria, VA 22313-1450. DO NOT SEND FEES OR COMPLETED FORMS TO THIS ADDRESS. **This form can only be used when in conjunction with EFS-Web. If this form is mailed to the USPTO, it may cause delays in reinstating the patent.**

Privacy Act Statement

The Privacy Act of 1974 (P.L. 93-579) requires that you be given certain information in connection with your submission of the attached form related to a patent application or patent. Accordingly, pursuant to the requirements of the Act, please be advised that: (1) the general authority for the collection of this information is 35 U.S.C. 2(b)(2); (2) furnishing of the information solicited is voluntary; and (3) the principal purpose for which the information is used by the U.S. Patent and Trademark Office is to process and/or examine your submission related to a patent application or patent. If you do not furnish the requested information, the U.S. Patent and Trademark Office may not be able to process and/or examine your submission, which may result in termination of proceedings or abandonment of the application or expiration of the patent.

The information provided by you in this form will be subject to the following routine uses:

1. The information on this form will be treated confidentially to the extent allowed under the Freedom of Information Act (5 U.S.C. 552) and the Privacy Act (5 U.S.C. 552a). Records from this system of records may be disclosed to the Department of Justice to determine whether the Freedom of Information Act requires disclosure of these record s.

2. A record from this system of records may be disclosed, as a routine use, in the course of presenting evidence to a court, magistrate, or administrative tribunal, including disclosures to opposing counsel in the course of settlement negotiations.

3. A record in this system of records may be disclosed, as a routine use, to a Member of Congress submitting a request involving an individual, to whom the record pertains, when the individual has requested assistance from the Member with respect to the subject matter of the record.

4. A record in this system of records may be disclosed, as a routine use, to a contractor of the Agency having need for the information in order to perform a contract. Recipients of information shall be required to comply with the requirements of the Privacy Act of 1974, as amended, pursuant to 5 U.S.C. 552a(m).

5. A record related to an International Application filed under the Patent Cooperation Treaty in this system of records may be disclosed, as a routine use, to the International Bureau of the World Intellectual Property Organization, pursuant to the Patent Cooperation Treaty.

6. A record in this system of records may be disclosed, as a routine use, to another federal agency for purposes of National Security review (35 U.S.C. 181) and for review pursuant to the Atomic Energy Act (42 U.S.C. 218(c)).

7. A record from this system of records may be disclosed, as a routine use, to the Administrator, General Services, or his/her designee, during an inspection of records conducted by GSA as part of that agency's responsibility to recommend improvements in records management practices and programs, under authority of 44 U.S.C. 2904 and 2906. Such disclosure shall be made in accordance with the GSA regulations governing inspection of records for this purpose, and any other relevant (i.e., GSA or Commerce) directive. Such disclosure shall not be used to make determinations about individuals.

8. A record from this system of records may be disclosed, as a routine use, to the public after either publication of the application pursuant to 35 U.S.C. 122(b) or issuance of a patent pursuant to 35 U.S.C. 151. Further, a record may be disclosed, subject to the limitations of 37 CFR 1.14, as a routine use, to the public if the record was filed in an application which became abandoned or in which the proceedings were terminated and which application is referenced by either a published application, an application open to public inspections or an issued patent.

9. A record from this system of records may be disclosed, as a routine use, to a Federal, State, or local law enforcement agency, if the USPTO becomes aware of a violation or potential violation of law or regulation.

UNITED STATES PATENT AND TRADEMARK OFFICE

Commissioner for Patents
United States Patent and Trademark Office
P.O. Box 1450
Alexandria, VA 22313-1450
www.uspto.gov

In re Patent No. 5457590
Issue Date: October 10,1995
Application No. 07712897
Filed: June 11,1991
Attorney Docket No. LWBR-0013

:

:DECISION GRANTING PETITION
:UNDER 37 CFR 1.378(c)

:

This is a decision on the electronic petition, filed November 15,2007 ,under 37 CFR 1.378(c) to accept the unintentionally delayed payment of the 11.5 year maintenance fee for the above-identified patent.

The petition is GRANTED.

The maintenance fee is accepted, and the above-identified patent reinstated as of November 15,2007. This decision also constitutes notice that the fee has been accepted. An electronic copy of the petition and this decision has been created as an entry in an Image File Wrapper. Nevertheless, petitioner should print and retain an independent copy

Telephone inquires related to this electronic decision should be directed to the Electronic Business Center at 1-866-217-9197.

SPE RESPONSE FOR CERTIFICATE OF CORRECTION

Paper No.: _____

DATE : 4/4/06

TO SPE OF : ART UNIT 1638

SUBJECT : Request for Certificate of Correction for Appl. No.: 07/713624 Patent No.: 6943282

Please respond to this request for a certificate of correction within 7 days.

Please review the requested changes/corrections as shown in the **COCIN** document(s) in the IFW application image. No new matter should be introduced, nor should the scope or meaning of the claims be changed.

Please complete the response (see below) and forward the completed response to scanning using document code **COCX**.

N. R. M.

Certificates of Correction Branch

703-308-9390 ext. _____

Thank You For Your Assistance

The request for issuing the above-identified correction(s) is hereby:

Note your decision on the appropriate box.

- ☐ **Approved** — All changes apply.
- ☒ **Approved in Part** — Specify below which changes **do not** apply.
- ☐ **Denied** — State the reasons for denial below.

Comments: The amendment to column 3 lines 5+6 is not entered – the preliminary amendment says "beta endotoxin".

LeMaire

SPE

1638

Art Unit

PTOL-306 (REV. 7/03)

U.S. DEPARTMENT OF COMMERCE Patent and Trademark Off

07/713624 cASC

I hereby certify that this correspondence is being deposited with the United States Postal Service as first class mail in an envelope addressed to: Commissioner for Patents, P.O. Box 1450 Alexandria, VA 22313 on 21 MARCH 2006.

#35,589

Jeff Lloyd, Patent Attorney

REQUEST FOR CERTIFICATE OF CORRECTION UNDER 37 CFR 1.322
Docket No. MPS 11-83B.FWC
Patent No. 6,943,282

OIPE IAP78 MAR 23 2006 PATENT & TRADEMARK OFFICE

IN THE UNITED STATES PATENT AND TRADEMARK OFFICE

Applicants	:	Michael J. Adang and John D. Kemp
Issued	:	September 13, 2005
Patent No.	:	6,943,282 B1
For	:	Insect Resistant Plants

Certificate MAR 27 2006 of Correction

Mail Stop Certificate of Corrections Branch
Commissioner for Patents
P.O. Box 1450
Alexandria, VA 22313-1450

REQUEST FOR CERTIFICATE OF CORRECTION
UNDER 37 CFR 1.322 (OFFICE MISTAKE)

Sir:

A Certificate of Correction (in duplicate) for the above-identified patent has been prepared and is attached hereto.

In the left-hand column below is the column and line number where errors occurred in the patent. In the right-hand column is the page and line number in the application where the correct information appears.

Patent Reads:	**Application Reads:**
Column 3, lines 5 and 6:	See Prel. Amend. dated April 14, 1989 (p. 1):
"the heta-exotoxin"	-- the α-exotoxin --.
Column 5, line 63:	Page 14, line 15:
"use of. Ti"	--use of Ti".

DO NOT ENTER ARK 5/9/06

OK to enter ARK 5/9/06

J:\MPS\11-83B.FWC\PTO\COC.Request.doc/DNB/amh

MAR 28 2006

OK to enter ARK 5/9/06 Column 9, lines 54 and 55:	See Prel. Amend. dated April 14, 1989 (p. 1):
"Merlo (1082) *supra*"	--Merlo, (1982) *supra* --.
Column 18, line 28:	~~Page 29, line 25:~~ 48 16 ARK 5/9/06
"may be in Planta"	--may be in planta--.
Column 28, line 58:	Page 74, line 4:
"ligated-with"	--ligated with--.
Column 29, line 51:	Page 76, line 18:
"digested with XhaI"	--digested with XhoI--.
Column 34, line 20:	See Prel. Amend. dated ~~April 13~~ March 14, 1992 (p. 2): ARK 5/9/06
"109 bacteria"	--10^9 bacteria--.
Column 35, line 21:	See Prel. Amend. dated ~~April 13~~ March 14, 1992 (p. 2)
"8 x 103 cells/ml."	--8 x 10^3 cells/ml.--.
Column 35, line 43:	See Prel. Amend. dated ~~April 13~~ March 14, 1992 (p. 2)
"6.3 Regenerator of Plants"	--6.3 Regeneration of Plants--.
Column 43, line 66:	See Prel. Amend. dated ~~April 13~~ March 14, 1992 (p. 3)
"107-108 ml-l;"	--10^7-10^8 ml^{-1};--.
Column 65, line 55:	Page 173, line 14:
"Ostrinia (Pyrausta) nubilaiis"	--Ostrinia (Pyrausta) nubialis--.
Column 73, line 14 (claim 1):	Examiner's Amendment to claim 15:
"insecticidal protein insects"	--insecticidal proteins to insects--.
Column 73, line 24:	Examiner's Amendment to claim 15:
"provided insecticidal protein"	--provided insecticidal proteins--.

MAR 28 2006

OK to enter AMK 5/9/06

Column 74, line 46, claim 21:	Examiner's Amendments to claim 49:
"nucleaic acid"	--nucleic acid--.
Column 74, line 48:	Examiner's Amendments to claim 49:
"endotoxin fragments"	--endotoxin fragment—
Column 74, line 52:	Examiner's Amendments to claim 49:
"endotoxin fragments"	--endotoxin fragment—

A true and correct copy of pages 14, 48, 74, 76, and 173 of the specification as filed, as well as copies of the Preliminary Amendments filed by applicants on April 14, 1989 and April 13, 1992 and a copy of the Examiner's Amendments that support Applicants' assertion of the errors on the part of the Patent Office accompany this Certificate of Correction.

Approval of the Certificate of Correction is respectfully requested.

Respectfully submitted,

Jeff Lloyd
Patent Attorney
Registration No. 35,589
Phone No.: 352-375-8100
Fax No.: 352-372-5800
Address: P.O. Box 142950
Gainesville, FL 32614-2950

JL/gld

Attachments:
1. Pages 14, 48, 74, 76, and 173 of the specification as filed
2. Copy of the Preliminary Amendment filed by applicants on April 14, 1989
3. Copy of the Preliminary Amendment filed by applicants on April 13, 1992
4. Copy of the Examiner's Amendments with Notice of Allowability

MAR 28 2006

UNITED STATES PATENT AND TRADEMARK OFFICE

COMMISSIONER FOR PATENTS
UNITED STATES PATENT AND TRADEMARK OFFICE
P.O. BOX 1450
ALEXANDRIA, VA 22313-1450
www.uspto.gov

NOV 17 2009

Dechert LLP
c/o Ann M. Caviani Pease
2440 W. El Camino Real, Suite 700
Mountain View CA 94040-1499

In Re: Patent Term Extension Applications for U.S. Patent No. 5,260,273 and U.S. Patent No. 5,789,381

DECISION DENYING APPLICATIONS FOR PATENT TERM EXTENSION FOR U.S. PATENT NOS. 5,260,273 AND 5,789,381

This is in response to the applications for interim patent term extension of the term of U.S. Patent No. 5,260,273 (the '273 patent) and U.S. Patent No. 5,789,381 (the '381 patent) under 35 U.S.C. § 156, filed in the United States Patent and Trademark Office (USPTO) on October 6, 2009. The application was filed by Discovery Laboratories Inc. on behalf of the patent owner, Scripps Research Institute (Applicant). Extension is sought based upon the continuing premarket review under § 505 of the Federal Food, Drug, and Cosmetic Act (FFDCA) of the human drug product known as SURFAXIN® (lucinactant) by the Food and Drug Administration (FDA). Because the patent term extension statute only contemplates granting a certificate of extension of a single patent for a single regulatory review period, the present applications for interim patent term extension for the '273 patent and the '381 patent must be **DENIED** in favor of the grant of interim extension in the provisionally elected patent for which interim extension is granted, U.S. Patent No. 5,407,914.

DECISION

Applicant points out in their applications for patent term extension that the provision in § 156(c)(4) clearly prohibits extension of more than one patent for a single regulatory review period under § 156(e)(1), but that there is no explicit prohibition against multiple interim patent term extensions under § 156(d)(5). Although this statement is per se true, the statement fails to consider the statutory language as a whole, the USPTO's long-standing practice and public interest.

I. Statutory Construction Requires Looking at the Statute as a Whole

"The starting point in every case involving construction of a statute is the language itself." *Santa Fe Indus., Inc. v. Green, 430 U.S. 462, 472 (1977).* When construing language in a statute, the terms must be construed "in accordance with [their] ordinary or natural meaning." *Microsoft Corp. v. AT&T Corp., 550 U.S. 437, 449 (2007).* Applicant would have the USPTO focus solely on the provision of § 156(c)(4) which explicitly states, "in no event shall more than one patent be extended under subsection (e)(1) for the same regulatory review period." That focus fails to give meaning to all the statutory provisions. The Court has spoken on this issue and stated, "[w]e must not be guided by a single sentence or member of a sentence, but look to the provisions of the whole law." *Gade v. Nat'l Solid Wastes Mqmt. Ass'n, 505 U.S. 88, 99 (1992); see also*

Splane v. West, 216 F.3d 1058, 1068 (Fed. Cir. 2000) ("We must construe a statute ... to give effect and meaning to all its terms."). Moreover, the Federal Circuit has concluded "[i]f the statutory language is clear and unambiguous, the inquiry ends with the plain meaning." *Myore v. Nicholson, 489 F.3d 1207, 1211 (Fed. Cir. 2007).*

The explicit language of section 156, in many instances, states that it is the term of "a patent" which shall be extended. Additionally, the statute provides for "an extension of the term of a patent." See § 156(d)(1). This is not the first time that the USPTO has been required to interpret the language "a patent." It is a long-standing interpretation of the USPTO that "a patent" means one patent. In the context of double patenting, the USPTO's Manual of Patent Examining Procedure (MPEP) clearly explains a "'same invention' type double patenting rejection [is] based on 35 U.S.C. 101 which states in the singular that an inventor 'may obtain **a** patent.'" See MPEP 804 (emphasis added).

The tenants of statutory construction require consideration of the statutory scheme as a whole, giving terms their plain and ordinary meaning. The dictionary definition of "a," as an indefinite article, is "used before nouns and noun phrases that denote a single but unspecified person or thing."[1] Similarly, the use of "an," as an indefinite article, is defined as the "form of 'a' used before words with a vowel or with an unpronounced h."[2] The following table summarizes some sections of the statutory language of section 156 which limit extension to "a" patent.

Section	**Language**
156(a)	[t]he term of **a** patent which claims a product. . . .shall be extended. . . .
156(b)(1)	in the case of **a** patent which claims a product, be limited to . . . .
156(b)(2)	in the case of **a** patent which claims a method of using a product, be limited to . . . .
156(b)(3)	in the case of **a** patent which claims a method of manufacturing a product, be limited to . . . .
156(d)(1)	To obtain **an** extension of the term of a patent under this section. . . .
156(d)(5)(C)	The owner of record of **a** patent, or its agent, for which **an** interim extension has been granted under subparagraph(b), ...

[1] See definition for "a" as an indefinite article at: http://www.thefreedictionary.com/a
[2] See definition for "an" as an indefinite article at: http://www.thefreedictionary.com/an

Based on the language of the statute, as a whole, and the plain meaning of "a patent," the statute only contemplated that a single patent is entitled to have the term extended for the same (single) regulatory review period. Similarly, the explicit language of section 156(d)(5)(C) makes clear that interim extension is applicable only for "a patent," stating, "[t]he owner of record of a patent, or its agent, for which an interim extension has been granted under subparagraph (b), may apply for not more than 4 subsequent interim extensions under this paragraph. . . ." The plain language of obtaining "an extension" for "a patent" delineates that the patent term extension statute contemplates that only one patent may be granted an interim extension. Furthermore, the language of § 156 distinguishes "interim extension" from "extension" by referring throughout subsection 156(d)(5) that the extension is "an interim extension." See e.g., § 156(d)(5)(F) indicating that the rights derived are "during the period of **interim extension**." (emphasis added).

II. Long-Standing Practice

In the approximately 25 years since the enactment of the Hatch-Waxman Act where the USPTO has been administering 35 U.S.C. § 156, the USPTO has not granted multiple interim patent term extensions under 35 U.S.C. § 156(d)(5) for a same (single) regulatory review period. Thus, it would be contrary to long-standing USPTO practice to do so now.

III. Grant Of Multiple § 156(d)(5) Extensions Would Ultimately Amount To Improvident Grant Of Term Extensions In Patents Which Were Not Entitled To Receive Extension

Because the statute does not prohibit a patent owner from seeking extension on more than one patent, an applicant may apply for extension of multiple patents. See 37 C.F.R. § 1.785. In that case, the USPTO and the regulating agency concurrently process the multiple applications for patent term extension and require election of a single patent to receive the certificate of extension under 35 U.S.C. § 156(e)(1). When there is no imminent expiration of a patent for which a certificate of extension is being sought, no interim extension is granted. Thus, at the conclusion of processing of multiple applications for patent term extension based on a same (single) regulatory review period, the elected patent would receive a certificate of extension and the non-elected patents would expire on their original expiration dates. However, unlike here, where the original expiration of the patent(s) are imminent, the USPTO has no authority to grant multiple interim extension under § 156(d)(5) to patent(s) which will not ultimately receive a certificate of extension. Any interim patent term extensions granted to patents which are ultimately not elected is tantamount to granting additional patent rights where the statute does not authorize the USPTO to so grant.

IV. Granting Interim Extension To A Single Patent When Only One Can Ultimately Be Extended Ensures The Public Of The Patent Rights Associated With The Product

Upon approval of the subject product, SURFAXIN®, the FDA would publish in the Approved Drug Products with Therapeutic Equivalence Evaluations (the Orange Book) the patent numbers of patents, which claim the product, SURFAXIN®, or a

method of using the product, SURFAXIN®, along with their respective expiration dates. Any member of the public desiring to determine when the patent protection ends for SURFAXIN® would see patents listed with expiration dates relating to the grant of multiple interim extensions. That situation would lead to confusion, since ultimately only one certificate of extension will be granted. Providing certainty for the public is ensured by granting an interim patent term extension only where warranted, here, that means that only the provisionally elected '914 obtains interim patent term extension.

V. Granting multiple interim extensions would permit additional patents to be listed in the FDA's Orange Book

When a New Drug Application (NDA) is filed with FDA, the marketing applicant must submit to FDA patent information. Specifically, the NDA contains information relating to patents which are alleged to claim the drug product or a method of using the drug product. Upon approval of the drug product, such patents would be automatically listed by FDA, provided that the patents have not expired. The ability of the patent owner (the marketing applicant before the FDA) to list additional patents in the FDA's Orange Book would require additional patent certifications for any filers of applications for drug approval under § 505(j) and § 505(b)(2) of the FFDCA. In granting multiple interim extensions, as sought in this case, means the additional patents would be listed in the Orange Book, necessitating additional patent certifications, and potentially leading to additional litigation. Such unnecessary litigation over patent(s) which would, ultimately, not receive a certificate of extension would nonetheless be required to resolve any patent certifications submitted by an abbreviated new drug application filer indicating non-infringement or invalidity of any listed patent. In granting a single interim extension under 35 U.S.C. § 156(d)(5) any abbreviated new drug application filer would be required to provide patent certifications for only the patent which would ultimately be eligible for a certificate of extension.

CONCLUSION

Applicant's PTE applications for U.S. Patent Nos. 5,260,273 and 5,789,381 are **DENIED**.

This is considered final agency action.

Any correspondence with respect to this matter should be addressed as follows:

By mail: Mail Stop Hatch-Waxman PTE
Commissioner for Patents
P.O. Box 1450
Alexandria, VA 22313-1450.

Telephone inquiries related to this determination should be directed to Mary C. Till at (571) 272-7755.

Brian E. Hanlon

Brian E. Hanlon
Director
Office of Patent Legal Administration
Office of the Deputy Commissioner
for Patent Examination Policy

cc: Office of Regulatory Policy
Food and Drug Administration
10903 New Hampshire Ave., Bldg. 51, Rm 6222
Silver Spring, MD 20993-0002

RE: SURFAXIN®
Docket No.:

Attention: Beverly Friedman

Approved for use through 04/30/2009. OMB 0651-0016
U.S. Patent and Trademark Office: U.S. DEPARTMENT OF COMMERCE
Under the Paperwork Reduction Act of 1995, no persons are required to respond to a collection of information unless it displays valid OMB control number.

PETITION TO ACCEPT UNINTENTIONALLY DELAYED PAYMENT OF MAINTENANCE FEE IN AN EXPIRED PATENT (37 CFR 1.378(c))

Patent Number	Issue Date (YYYY-MM-DD)	Application Number	Filing Date (YYYY-MM-DD)	Docket Number (if applicable)
5485396	1996-01-16	07723109	1991-06-28	A 050149US

CAUTION: Maintenance fee (and surcharge, if any) payment must correctly identify: (1) the patent number and (2) the application number of the actual U.S. application leading to issuance of that patent to ensure the fee(s) is/are associated with the correct patent. 37 CFR 1.366(c) and (d).

SMALL ENTITY
☐ Patentee claims, or has previously claimed, small entity status. See 37 CFR 1.27.

LOSS OF ENTITLEMENT TO SMALL ENTITY STATUS
☐ Patentee is no longer entitled to small entity status. See 37 CFR 1.27(g)

NOT Small Entity		Small Entity	
Fee	Code	Fee	Code
○ 3 ½ year	(1551)	○ 3 ½ year	(2551)
○ 7 ½ year	(1552)	○ 7 ½ year	(2552)
◉ 11 ½ year	(1553)	○ 11 ½ year	(2553)

SURCHARGE
The surcharge required by 37 CFR 1.20(i)(2) (Fee Code 1558) must be paid as a condition of accepting unintentionally delayed payment of the maintenance fee.

MAINTENANCE FEE (37 CFR 1.20(e)-(g))
The appropriate maintenance fee must be submitted with this petition.

STATEMENT
THE UNDERSIGNED CERTIFIES THAT THE DELAY IN PAYMENT OF THE MAINTENANCE FEE TO THIS PATENT WAS UNINTENTIONAL

PETITIONER(S) REQUEST THAT THE DELAYED PAYMENT OF THE MAINTENANCE FEE BE ACCEPTED AND THE PATENT REINSTATED

THIS PORTION MUST BE COMPLETED BY THE SIGNATORY OR SIGNATORIES

37 CFR 1.378(d) states: "Any petition under this section must be signed by an attorney or agent registered to practice before the Patent and Trademark Office, or by the patentee, the assignee, or other party in interest."

I certify, in accordance with 37 CFR 1.4(d)(4) that I am

◉ An attorney or agent registered to practice before the Patent and Trademark Office

○ A sole patentee

○ A joint patentee; I certify that I am authorized to sign this submission on behalf of all the other patentees.

○ A joint patentee; all of whom are signing this e-petition

○ The assignee of record of the entire interest

Patent Practitioner			
A signature of the applicant or representative is required in accordance with 37 CFR 1.33 and 10.18. Please see 37 CFR 1.4(d) for the form of the signature			
Signature	/Aaron M Waxler/	Date (YYYY-MM-DD)	2008-12-16
Name	Aaron Waxler	Registration Number	48027

This collection of information is required by 37 CFR 1.378(c). The information is required to obtain or retain a benefit by the public which is to file (and by the USPTO to process) an application. Confidentiality is governed by 35 U.S.C. 122 and 37 CFR 1.11 and 1.14. This collection is estimated to take 1 hour to complete, including gathering, preparing, and submitting the completed application form to the USPTO. Time will vary depending upon the individual case. Any comments on the amount of time you require to complete this form and/ or suggestions for reducing this burden, should be sent to the Chief Information Officer, U.S. Patent and Trademark Office, U.S. Department of Commerce, P.O. Box 1450, Alexandria, VA 22313-1450. DO NOT SEND FEES OR COMPLETED FORMS TO THIS ADDRESS. **This form can only be used when in conjunction with EFS-Web. If this form is mailed to the USPTO, it may cause delays in reinstating the patent.**

Privacy Act Statement

The Privacy Act of 1974 (P.L. 93-579) requires that you be given certain information in connection with your submission of the attached form related to a patent application or patent. Accordingly, pursuant to the requirements of the Act, please be advised that: (1) the general authority for the collection of this information is 35 U.S.C. 2(b)(2); (2) furnishing of the information solicited is voluntary; and (3) the principal purpose for which the information is used by the U.S. Patent and Trademark Office is to process and/or examine your submission related to a patent application or patent. If you do not furnish the requested information, the U.S. Patent and Trademark Office may not be able to process and/or examine your submission, which may result in termination of proceedings or abandonment of the application or expiration of the patent.

The information provided by you in this form will be subject to the following routine uses:

1. The information on this form will be treated confidentially to the extent allowed under the Freedom of Information Act (5 U.S.C. 552) and the Privacy Act (5 U.S.C. 552a). Records from this system of records may be disclosed to the Department of Justice to determine whether the Freedom of Information Act requires disclosure of these record s.

2. A record from this system of records may be disclosed, as a routine use, in the course of presenting evidence to a court, magistrate, or administrative tribunal, including disclosures to opposing counsel in the course of settlement negotiations.

3. A record in this system of records may be disclosed, as a routine use, to a Member of Congress submitting a request involving an individual, to whom the record pertains, when the individual has requested assistance from the Member with respect to the subject matter of the record.

4. A record in this system of records may be disclosed, as a routine use, to a contractor of the Agency having need for the information in order to perform a contract. Recipients of information shall be required to comply with the requirements of the Privacy Act of 1974, as amended, pursuant to 5 U.S.C. 552a(m).

5. A record related to an International Application filed under the Patent Cooperation Treaty in this system of records may be disclosed, as a routine use, to the International Bureau of the World Intellectual Property Organization, pursuant to the Patent Cooperation Treaty.

6. A record in this system of records may be disclosed, as a routine use, to another federal agency for purposes of National Security review (35 U.S.C. 181) and for review pursuant to the Atomic Energy Act (42 U.S.C. 218(c)).

7. A record from this system of records may be disclosed, as a routine use, to the Administrator, General Services, or his/her designee, during an inspection of records conducted by GSA as part of that agency's responsibility to recommend improvements in records management practices and programs, under authority of 44 U.S.C. 2904 and 2906. Such disclosure shall be made in accordance with the GSA regulations governing inspection of records for this purpose, and any other relevant (i.e., GSA or Commerce) directive. Such disclosure shall not be used to make determinations about individuals.

8. A record from this system of records may be disclosed, as a routine use, to the public after either publication of the application pursuant to 35 U.S.C. 122(b) or issuance of a patent pursuant to 35 U.S.C. 151. Further, a record may be disclosed, subject to the limitations of 37 CFR 1.14, as a routine use, to the public if the record was filed in an application which became abandoned or in which the proceedings were terminated and which application is referenced by either a published application, an application open to public inspections or an issued patent.

9. A record from this system of records may be disclosed, as a routine use, to a Federal, State, or local law enforcement agency, if the USPTO becomes aware of a violation or potential violation of law or regulation.

UNITED STATES PATENT AND TRADEMARK OFFICE

Commissioner for Patents
United States Patent and Trademark Office
P.O. Box 1450
Alexandria, VA 22313-1450
www.uspto.gov

In re Patent No. 5485396
Issue Date: January 16,1996
Application No. 07723109
Filed: June 28,1991
Attorney Docket No. 1316

:
:DECISION GRANTING PETITION
:UNDER 37 CFR 1.378(c)
:

This is a decision on the electronic petition, filed December 17,2008 ,under 37 CFR 1.378(c) to accept the unintentionally delayed payment of the 11.5 year maintenance fee for the above-identified patent.

The petition is **GRANTED**.

The maintenance fee is accepted, and the above-identified patent reinstated as of December 17,2008 . This decision also constitutes notice that the fee has been accepted. An electronic copy of the petition and this decision has been created as an entry in the Image File Wrapper. Nevertheless, petitioner should print and retain an independent copy.

Telephone inquiries related to this electronic decision should be directed to the Electronic Business Center at 1-866-217-9197.

SPE RESPONSE FOR CERTIFICATE OF CORRECTION

Paper No.: _____

DATE : 02/17/10

TO SPE OF : ART UNIT 3992

SUBJECT : Request for Certificate of Correction for Appl. No.: 07724335 Patent No.: 5445146

Please respond to this request for a certificate of correction within 7 days.

FOR IFW FILES:

Please review the requested changes/corrections as shown in the **COCIN** document(s) in the IFW application image. No new matter should be introduced, nor should the scope or meaning of the claims be changed.

Please complete the response (see below) and forward the completed response to scanning using document code **COCX**.

FOR PAPER FILES:

Please review the requested changes/corrections as shown in the attached certificate of correction. Please complete this form (see below) and forward it with the file to:

Certificates of Correction Branch (C of C)
Randolph Square 9D40-D
Palm Location 7580
You can fax the Directors/SPE response to 571-270-9990

Lamonte Newsome
Certificates of Correction Branch
703-756-1574

Thank You For Your Assistance

The request for issuing the above-identified correction(s) is hereby:
Note your decision on the appropriate box.

- [x] **Approved** — **All** changes apply.
- [ ] **Approved in Part** — Specify below which changes **do not** apply.
- [ ] **Denied** — State the reasons for denial below.

Comments: _____

JESSICA HARRISON
SUPERVISORY PATENT EXAMINER

4/12/10

Under the Paperwork Reduction Act of 1995, no persons are required to respond to a collection of information unless it displays valid OMB control number.

PETITION TO ACCEPT UNINTENTIONALLY DELAYED PAYMENT OF MAINTENANCE FEE IN AN EXPIRED PATENT (37 CFR 1.378(c))

Patent Number	Issue Date (YYYY-MM-DD)	Application Number	Filing Date (YYYY-MM-DD)	Docket Number (if applicable)
5,230,021	1993-07-20	07/730,172	1991-07-12	

CAUTION: Maintenance fee (and surcharge, if any) payment must correctly identify: (1) the patent number and (2) the application number of the actual U.S. application leading to issuance of that patent to ensure the fee(s) is/are associated with the correct patent. 37 CFR 1.366(c) and (d).

SMALL ENTITY
☒ Patentee claims, or has previously claimed, small entity status. See 37 CFR 1.27.

LOSS OF ENTITLEMENT TO SMALL ENTITY STATUS
☐ Patentee is no longer entitled to small entity status. See 37 CFR 1.27(g)

NOT Small Entity			Small Entity		
	Fee	Code		Fee	Code
○	3 ½ year	(1551)	○	3 ½ year	(2551)
○	7 ½ year	(1552)	○	7 ½ year	(2552)
○	11 ½ year	(1553)	◉	11 ½ year	(2553)

SURCHARGE
The surcharge required by 37 CFR 1.20(i)(2) (Fee Code 1558) must be paid as a condition of accepting unintentionally delayed payment of the maintenance fee.

MAINTENANCE FEE (37 CFR 1.20(e)-(g))
The appropriate maintenance fee must be submitted with this petition.

STATEMENT
THE UNDERSIGNED CERTIFIES THAT THE DELAY IN PAYMENT OF THE MAINTENANCE FEE TO THIS PATENT WAS UNINTENTIONAL

PETITIONER(S) REQUEST THAT THE DELAYED PAYMENT OF THE MAINTENANCE FEE BE ACCEPTED AND THE PATENT REINSTATED

THIS PORTION MUST BE COMPLETED BY THE SIGNATORY OR SIGNATORIES

37 CFR 1.378(d) states: "Any petition under this section must be signed by an attorney or agent registered to practice before the Patent and Trademark Office, or by the patentee, the assignee, or other party in interest."

I certify, in accordance with 37 CFR 1.4(d)(4) that I am

◉ An attorney or agent registered to practice before the Patent and Trademark Office

○ A sole patentee

○ A joint patentee; I certify that I am authorized to sign this submission on behalf of all the other patentees.

○ A joint patentee; all of whom are signing this e-petition

○ The assignee of record of the entire interest

Patent Practitioner			
A signature of the applicant or representative is required in accordance with 37 CFR 1.33 and 10.18. Please see 37 CFR 1.4(d) for the form of the signature			
Signature	/Roy Kim/	Date (YYYY-MM-DD)	2007-02-06
Name	Roy Kim	Registration Number	51883

This collection of information is required by 37 CFR 1.378(c). The information is required to obtain or retain a benefit by the public which is to file (and by the USPTO to process) an application. Confidentiality is governed by 35 U.S.C. 122 and 37 CFR 1.11 and 1.14. This collection is estimated to take 1 hour to complete, including gathering, preparing, and submitting the completed application form to the USPTO. Time will vary depending upon the individual case. Any comments on the amount of time you require to complete this form and/ or suggestions for reducing this burden, should be sent to the Chief Information Officer, U.S. Patent and Trademark Office, U.S. Department of Commerce, P.O. Box 1450, Alexandria, VA 22313-1450. DO NOT SEND FEES OR COMPLETED FORMS TO THIS ADDRESS. **This form can only be used when in conjunction with EFS-Web. If this form is mailed to the USPTO, it may cause delays in reinstating the patent.**

Privacy Act Statement

The Privacy Act of 1974 (P.L. 93-579) requires that you be given certain information in connection with your submission of the attached form related to a patent application or patent. Accordingly, pursuant to the requirements of the Act, please be advised that: (1) the general authority for the collection of this information is 35 U.S.C. 2(b)(2); (2) furnishing of the information solicited is voluntary; and (3) the principal purpose for which the information is used by the U.S. Patent and Trademark Office is to process and/or examine your submission related to a patent application or patent. If you do not furnish the requested information, the U.S. Patent and Trademark Office may not be able to process and/or examine your submission, which may result in termination of proceedings or abandonment of the application or expiration of the patent.

The information provided by you in this form will be subject to the following routine uses:

1. The information on this form will be treated confidentially to the extent allowed under the Freedom of Information Act (5 U.S.C. 552) and the Privacy Act (5 U.S.C. 552a). Records from this system of records may be disclosed to the Department of Justice to determine whether the Freedom of Information Act requires disclosure of these record s.

2. A record from this system of records may be disclosed, as a routine use, in the course of presenting evidence to a court, magistrate, or administrative tribunal, including disclosures to opposing counsel in the course of settlement negotiations.

3. A record in this system of records may be disclosed, as a routine use, to a Member of Congress submitting a request involving an individual, to whom the record pertains, when the individual has requested assistance from the Member with respect to the subject matter of the record.

4. A record in this system of records may be disclosed, as a routine use, to a contractor of the Agency having need for the information in order to perform a contract. Recipients of information shall be required to comply with the requirements of the Privacy Act of 1974, as amended, pursuant to 5 U.S.C. 552a(m).

5. A record related to an International Application filed under the Patent Cooperation Treaty in this system of records may be disclosed, as a routine use, to the International Bureau of the World Intellectual Property Organization, pursuant to the Patent Cooperation Treaty.

6. A record in this system of records may be disclosed, as a routine use, to another federal agency for purposes of National Security review (35 U.S.C. 181) and for review pursuant to the Atomic Energy Act (42 U.S.C. 218(c)).

7. A record from this system of records may be disclosed, as a routine use, to the Administrator, General Services, or his/her designee, during an inspection of records conducted by GSA as part of that agency's responsibility to recommend improvements in records management practices and programs, under authority of 44 U.S.C. 2904 and 2906. Such disclosure shall be made in accordance with the GSA regulations governing inspection of records for this purpose, and any other relevant (i.e., GSA or Commerce) directive. Such disclosure shall not be used to make determinations about individuals.

8. A record from this system of records may be disclosed, as a routine use, to the public after either publication of the application pursuant to 35 U.S.C. 122(b) or issuance of a patent pursuant to 35 U.S.C. 151. Further, a record may be disclosed, subject to the limitations of 37 CFR 1.14, as a routine use, to the public if the record was filed in an application which became abandoned or in which the proceedings were terminated and which application is referenced by either a published application, an application open to public inspections or an issued patent.

9. A record from this system of records may be disclosed, as a routine use, to a Federal, State, or local law enforcement agency, if the USPTO becomes aware of a violation or potential violation of law or regulation.

UNITED STATES PATENT AND TRADEMARK OFFICE

Commissioner for Patents
United States Patent and Trademark Office
P.O. Box 1450
Alexandria, VA 22313-1450
www.uspto.gov

In re Patent No. 5230021
Issue Date: July 20,1993
Application No. 07730172
Filed: July 12,1991
Attorney Docket No. 2205-35370

:
:DECISION GRANTING PETITION
:UNDER 37 CFR 1.378(c)
:

This is a decision on the electronic petition, filed February 7,2007 ,under 37 CFR 1.378(c) to accept the unintentionally delayed payment of the 11.5 year maintenance fee for the above-identified patent.

The petition is GRANTED.

The maintenance fee is accepted, and the above-identified patent reinstated as of February 7,2007 . This decision also constitutes notice that the fee has been accepted. An electronic copy of the petition and this decision has been created as an entry in an Image File Wrapper. Nevertheless, petitioner should print and retain an independent copy

Telephone inquires related to this electronic decision should be directed to the Electronic Business Center at 1-866-217-9197.

UNITED STATES PATENT AND TRADEMARK OFFICE

Commissioner for Patents
United States Patent and Trademark Office
P.O. Box 1450
Alexandria, VA 22313-1450
www.uspto.gov

Ole K. Nilssen
200 N Harrison Street
Suite 103
Algonquin, IL 60102

COPY MAILED
OCT 27 2006
OFFICE OF PETITIONS

In re Patent No. 5,428,266	:	
Issue Date: June 27, 1995	:	
Application No. 07/734,188	:	NOTICE
Filed: July 22, 1991	:	
Patentee(s): Ole K. Nilssen	:	

This is a notice regarding your request for acceptance of a fee deficiency submission under 37 CFR 1.28, filed June 27, 2006. On September 1, 1998, the Court of Appeals for the Federal Circuit held that 37 CFR 1.28(c) is the sole provision governing the time for correction of the erroneous payment of the issue fee as a small entity. **See DH Technology v. Synergystex International, Inc. 154 F.3d 1333, 47 USPQ2d 1865 (Fed. Cir. Sept. 1, 1998).**

The Office no longer investigates or rejects original or reissue applications under 37 CFR 1.56. **1098 Off. Gaz. Pat. Office 502 (January 3, 1989)**. Therefore, nothing in this Notice is intended to imply that an investigation was done.

Your fee deficiency submission under 37 CFR 1.28 is hereby **ACCEPTED**. Therefore, status as a small entity has been removed and all future fees paid must be paid at the large entity rate.

Inquiries related to this communication should be directed to the undersigned at (571) 272-3226.

Andrea Smith
Petitions Examiner
Office of Petitions

Under the Paperwork Reduction Act of 1995, no persons are required to respond to a collection of information unless it displays valid OMB control number.

PETITION TO ACCEPT UNINTENTIONALLY DELAYED PAYMENT OF MAINTENANCE FEE IN AN EXPIRED PATENT (37 CFR 1.378(c))

Patent Number	Issue Date (YYYY-MM-DD)	Application Number	Filing Date (YYYY-MM-DD)	Docket Number (if applicable)
5,226,328	1993-07-13	07/736,466	1991-07-26	06-1176.44

CAUTION: Maintenance fee (and surcharge, if any) payment must correctly identify: (1) the patent number and (2) the application number of the actual U.S. application leading to issuance of that patent to ensure the fee(s) is/are associated with the correct patent. 37 CFR 1.366(c) and (d).

SMALL ENTITY
☒ Patentee claims, or has previously claimed, small entity status. See 37 CFR 1.27.

LOSS OF ENTITLEMENT TO SMALL ENTITY STATUS
☐ Patentee is no longer entitled to small entity status. See 37 CFR 1.27(g)

NOT Small Entity			Small Entity		
	Fee	Code		Fee	Code
○	3 ½ year	(1551)	○	3 ½ year	(2551)
○	7 ½ year	(1552)	○	7 ½ year	(2552)
○	11 ½ year	(1553)	◉	11 ½ year	(2553)

SURCHARGE
The surcharge required by 37 CFR 1.20(i)(2) (Fee Code 1558) must be paid as a condition of accepting unintentionally delayed payment of the maintenance fee.

MAINTENANCE FEE (37 CFR 1.20(e)-(g))
The appropriate maintenance fee must be submitted with this petition.

STATEMENT
THE UNDERSIGNED CERTIFIES THAT THE DELAY IN PAYMENT OF THE MAINTENANCE FEE TO THIS PATENT WAS UNINTENTIONAL

PETITIONER(S) REQUEST THAT THE DELAYED PAYMENT OF THE MAINTENANCE FEE BE ACCEPTED AND THE PATENT REINSTATED

THIS PORTION MUST BE COMPLETED BY THE SIGNATORY OR SIGNATORIES

37 CFR 1.378(d) states: "Any petition under this section must be signed by an attorney or agent registered to practice before the Patent and Trademark Office, or by the patentee, the assignee, or other party in interest."

I certify, in accordance with 37 CFR 1.4(d)(4) that I am

◉ An attorney or agent registered to practice before the Patent and Trademark Office

○ A sole patentee

○ A joint patentee; I certify that I am authorized to sign this submission on behalf of all the other patentees.

○ A joint patentee; all of whom are signing this e-petition

○ The assignee of record of the entire interest

Patent Practitioner			
A signature of the applicant or representative is required in accordance with 37 CFR 1.33 and 10.18. Please see 37 CFR 1.4(d) for the form of the signature			
Signature	/George P. Kobler/	Date (YYYY-MM-DD)	2006-02-07
Name	George P. Kobler	Registration Number	46837

This collection of information is required by 37 CFR 1.378(c). The information is required to obtain or retain a benefit by the public which is to file (and by the USPTO to process) an application. Confidentiality is governed by 35 U.S.C. 122 and 37 CFR 1.11 and 1.14. This collection is estimated to take 1 hour to complete, including gathering, preparing, and submitting the completed application form to the USPTO. Time will vary depending upon the individual case. Any comments on the amount of time you require to complete this form and/ or suggestions for reducing this burden, should be sent to the Chief Information Officer, U.S. Patent and Trademark Office, U.S. Department of Commerce, P.O. Box 1450, Alexandria, VA 22313-1450. DO NOT SEND FEES OR COMPLETED FORMS TO THIS ADDRESS. **This form can only be used when in conjunction with EFS-Web. If this form is mailed to the USPTO, it may cause delays in reinstating the patent.**

Privacy Act Statement

The Privacy Act of 1974 (P.L. 93-579) requires that you be given certain information in connection with your submission of the attached form related to a patent application or patent. Accordingly, pursuant to the requirements of the Act, please be advised that: (1) the general authority for the collection of this information is 35 U.S.C. 2(b)(2); (2) furnishing of the information solicited is voluntary; and (3) the principal purpose for which the information is used by the U.S. Patent and Trademark Office is to process and/or examine your submission related to a patent application or patent. If you do not furnish the requested information, the U.S. Patent and Trademark Office may not be able to process and/or examine your submission, which may result in termination of proceedings or abandonment of the application or expiration of the patent.

The information provided by you in this form will be subject to the following routine uses:

1. The information on this form will be treated confidentially to the extent allowed under the Freedom of Information Act (5 U.S.C. 552) and the Privacy Act (5 U.S.C. 552a). Records from this system of records may be disclosed to the Department of Justice to determine whether the Freedom of Information Act requires disclosure of these record s.

2. A record from this system of records may be disclosed, as a routine use, in the course of presenting evidence to a court, magistrate, or administrative tribunal, including disclosures to opposing counsel in the course of settlement negotiations.

3. A record in this system of records may be disclosed, as a routine use, to a Member of Congress submitting a request involving an individual, to whom the record pertains, when the individual has requested assistance from the Member with respect to the subject matter of the record.

4. A record in this system of records may be disclosed, as a routine use, to a contractor of the Agency having need for the information in order to perform a contract. Recipients of information shall be required to comply with the requirements of the Privacy Act of 1974, as amended, pursuant to 5 U.S.C. 552a(m).

5. A record related to an International Application filed under the Patent Cooperation Treaty in this system of records may be disclosed, as a routine use, to the International Bureau of the World Intellectual Property Organization, pursuant to the Patent Cooperation Treaty.

6. A record in this system of records may be disclosed, as a routine use, to another federal agency for purposes of National Security review (35 U.S.C. 181) and for review pursuant to the Atomic Energy Act (42 U.S.C. 218(c)).

7. A record from this system of records may be disclosed, as a routine use, to the Administrator, General Services, or his/her designee, during an inspection of records conducted by GSA as part of that agency's responsibility to recommend improvements in records management practices and programs, under authority of 44 U.S.C. 2904 and 2906. Such disclosure shall be made in accordance with the GSA regulations governing inspection of records for this purpose, and any other relevant (i.e., GSA or Commerce) directive. Such disclosure shall not be used to make determinations about individuals.

8. A record from this system of records may be disclosed, as a routine use, to the public after either publication of the application pursuant to 35 U.S.C. 122(b) or issuance of a patent pursuant to 35 U.S.C. 151. Further, a record may be disclosed, subject to the limitations of 37 CFR 1.14, as a routine use, to the public if the record was filed in an application which became abandoned or in which the proceedings were terminated and which application is referenced by either a published application, an application open to public inspections or an issued patent.

9. A record from this system of records may be disclosed, as a routine use, to a Federal, State, or local law enforcement agency, if the USPTO becomes aware of a violation or potential violation of law or regulation.

UNITED STATES PATENT AND TRADEMARK OFFICE

Commissioner for Patents
United States Patent and Trademark Office
P.O. Box 1450
Alexandria, VA 22313-1450
www.uspto.gov

In re Patent No. 5226328
Issue Date: July 13,1993
Application No. 07736466
Filed: July 26,1991
Attorney Docket No. ADS.7

:

:DECISION GRANTING PETITION
:UNDER 37 CFR 1.378(c)

:

This is a decision on the electronic petition, filed February 7,2007 ,under 37 CFR 1.378(c) to accept the unintentionally delayed payment of the 11.5 year maintenance fee for the above-identified patent.

The petition is GRANTED.

The maintenance fee is accepted, and the above-identified patent reinstated as of February 7,2007 . This decision also constitutes notice that the fee has been accepted. An electronic copy of the petition and this decision has been created as an entry in an Image File Wrapper. Nevertheless, petitioner should print and retain an independent copy

Telephone inquires related to this electronic decision should be directed to the Electronic Business Center at 1-866-217-9197.

UNITED STATES PATENT AND TRADEMARK OFFICE

Commissioner for Patents
United States Patent and Trademark Office
P.O. Box 1450
Alexandria, VA 22313-1450
www.uspto.gov

In re Patent No. 5321762
Issue Date: June 14,1994
Application No. 07740068
Filed: August 5,1991
Attorney Docket No. 85-617

:

:DECISION GRANTING PETITION
:UNDER 37 CFR 1.378(c)

:

This is a decision on the electronic petition, filed January 29,2007 ,under 37 CFR 1.378(c) to accept the unintentionally delayed payment of the 11.5 year maintenance fee for the above-identified patent.

The petition is GRANTED.

The maintenance fee is accepted, and the above-identified patent reinstated as of January 29,2007 . This decision also constitutes notice that the fee has been accepted. An electronic copy of the petition and this decision has been created as an entry in an Image File Wrapper. Nevertheless, petitioner should print and retain an independent copy

Telephone inquires related to this electronic decision should be directed to the Electronic Business Center at 1-866-217-9197.

Under the Paperwork Reduction Act of 1995, no persons are required to respond to a collection of information unless it displays valid OMB control number.

PETITION TO ACCEPT UNINTENTIONALLY DELAYED PAYMENT OF MAINTENANCE FEE IN AN EXPIRED PATENT (37 CFR 1.378(c))

Patent Number	Issue Date (YYYY-MM-DD)	Application Number	Filing Date (YYYY-MM-DD)	Docket Number (if applicable)
5321762	1994-06-14	07/740,068	1991-08-05	

CAUTION: Maintenance fee (and surcharge, if any) payment must correctly identify: (1) the patent number and (2) the application number of the actual U.S. application leading to issuance of that patent to ensure the fee(s) is/are associated with the correct patent. 37 CFR 1.366(c) and (d).

SMALL ENTITY
☐ Patentee claims, or has previously claimed, small entity status. See 37 CFR 1.27.

LOSS OF ENTITLEMENT TO SMALL ENTITY STATUS
☐ Patentee is no longer entitled to small entity status. See 37 CFR 1.27(g)

NOT Small Entity		Small Entity	
Fee	Code	Fee	Code
○ 3 ½ year	(1551)	○ 3 ½ year	(2551)
○ 7 ½ year	(1552)	○ 7 ½ year	(2552)
◉ 11 ½ year	(1553)	○ 11 ½ year	(2553)

SURCHARGE
The surcharge required by 37 CFR 1.20(i)(2) (Fee Code 1558) must be paid as a condition of accepting unintentionally delayed payment of the maintenance fee.

MAINTENANCE FEE (37 CFR 1.20(e)-(g))
The appropriate maintenance fee must be submitted with this petition.

STATEMENT
THE UNDERSIGNED CERTIFIES THAT THE DELAY IN PAYMENT OF THE MAINTENANCE FEE TO THIS PATENT WAS UNINTENTIONAL

PETITIONER(S) REQUEST THAT THE DELAYED PAYMENT OF THE MAINTENANCE FEE BE ACCEPTED AND THE PATENT REINSTATED

THIS PORTION MUST BE COMPLETED BY THE SIGNATORY OR SIGNATORIES

37 CFR 1.378(d) states: "Any petition under this section must be signed by an attorney or agent registered to practice before the Patent and Trademark Office, or by the patentee, the assignee, or other party in interest."

I certify, in accordance with 37 CFR 1.4(d)(4) that I am

◉ An attorney or agent registered to practice before the Patent and Trademark Office

○ A sole patentee

○ A joint patentee; I certify that I am authorized to sign this submission on behalf of all the other patentees.

○ A joint patentee; all of whom are signing this e-petition

○ The assignee of record of the entire interest

Patent Practitioner			
A signature of the applicant or representative is required in accordance with 37 CFR 1.33 and 10.18. Please see 37 CFR 1.4(d) for the form of the signature			
Signature	/Roy A. Kim/	Date (YYYY-MM-DD)	2007-01-29
Name	Roy A. Kim	Registration Number	51883

This collection of information is required by 37 CFR 1.378(c). The information is required to obtain or retain a benefit by the public which is to file (and by the USPTO to process) an application. Confidentiality is governed by 35 U.S.C. 122 and 37 CFR 1.11 and 1.14. This collection is estimated to take 1 hour to complete, including gathering, preparing, and submitting the completed application form to the USPTO. Time will vary depending upon the individual case. Any comments on the amount of time you require to complete this form and/ or suggestions for reducing this burden, should be sent to the Chief Information Officer, U.S. Patent and Trademark Office, U.S. Department of Commerce, P.O. Box 1450, Alexandria, VA 22313-1450. DO NOT SEND FEES OR COMPLETED FORMS TO THIS ADDRESS. **This form can only be used when in conjunction with EFS-Web. If this form is mailed to the USPTO, it may cause delays in reinstating the patent.**

Privacy Act Statement

The Privacy Act of 1974 (P.L. 93-579) requires that you be given certain information in connection with your submission of the attached form related to a patent application or patent. Accordingly, pursuant to the requirements of the Act, please be advised that: (1) the general authority for the collection of this information is 35 U.S.C. 2(b)(2); (2) furnishing of the information solicited is voluntary; and (3) the principal purpose for which the information is used by the U.S. Patent and Trademark Office is to process and/or examine your submission related to a patent application or patent. If you do not furnish the requested information, the U.S. Patent and Trademark Office may not be able to process and/or examine your submission, which may result in termination of proceedings or abandonment of the application or expiration of the patent.

The information provided by you in this form will be subject to the following routine uses:

1. The information on this form will be treated confidentially to the extent allowed under the Freedom of Information Act (5 U.S.C. 552) and the Privacy Act (5 U.S.C. 552a). Records from this system of records may be disclosed to the Department of Justice to determine whether the Freedom of Information Act requires disclosure of these record s.

2. A record from this system of records may be disclosed, as a routine use, in the course of presenting evidence to a court, magistrate, or administrative tribunal, including disclosures to opposing counsel in the course of settlement negotiations.

3. A record in this system of records may be disclosed, as a routine use, to a Member of Congress submitting a request involving an individual, to whom the record pertains, when the individual has requested assistance from the Member with respect to the subject matter of the record.

4. A record in this system of records may be disclosed, as a routine use, to a contractor of the Agency having need for the information in order to perform a contract. Recipients of information shall be required to comply with the requirements of the Privacy Act of 1974, as amended, pursuant to 5 U.S.C. 552a(m).

5. A record related to an International Application filed under the Patent Cooperation Treaty in this system of records may be disclosed, as a routine use, to the International Bureau of the World Intellectual Property Organization, pursuant to the Patent Cooperation Treaty.

6. A record in this system of records may be disclosed, as a routine use, to another federal agency for purposes of National Security review (35 U.S.C. 181) and for review pursuant to the Atomic Energy Act (42 U.S.C. 218(c)).

7. A record from this system of records may be disclosed, as a routine use, to the Administrator, General Services, or his/her designee, during an inspection of records conducted by GSA as part of that agency's responsibility to recommend improvements in records management practices and programs, under authority of 44 U.S.C. 2904 and 2906. Such disclosure shall be made in accordance with the GSA regulations governing inspection of records for this purpose, and any other relevant (i.e., GSA or Commerce) directive. Such disclosure shall not be used to make determinations about individuals.

8. A record from this system of records may be disclosed, as a routine use, to the public after either publication of the application pursuant to 35 U.S.C. 122(b) or issuance of a patent pursuant to 35 U.S.C. 151. Further, a record may be disclosed, subject to the limitations of 37 CFR 1.14, as a routine use, to the public if the record was filed in an application which became abandoned or in which the proceedings were terminated and which application is referenced by either a published application, an application open to public inspections or an issued patent.

9. A record from this system of records may be disclosed, as a routine use, to a Federal, State, or local law enforcement agency, if the USPTO becomes aware of a violation or potential violation of law or regulation.

UNITED STATES PATENT AND TRADEMARK OFFICE

Commissioner for Patents
United States Patent and Trademark Office
P.O. Box 1450
Alexandria, VA 22313-1450
www.uspto.gov

OLE K. NILSSEN
200 N. HARRISON ST, SUITE 103
ALGONQUIN IL 60102

COPY MAILED

AUG 01 2006

OFFICE OF PETITIONS

In re Application of
NILSSEN
Patent 5,144,202
Application No. 07/741,575
Filed: August 7, 1991
Issued: September 1, 1992

: NOTICE

This is a notice regarding your request filed on January 27, 2006, for acceptance of a fee deficiency submission under 37 CFR 1.28 (c).

37 CFR 1.28 (c) states: "The deficiency is based on the amount of the fee, for other than a small entity, in effect at the time the deficiency is paid in full." Accordingly, the fee deficiency submission under 37 CFR 1.28 is hereby accepted.

The change in status to a large entity has been entered and made of record. This Notice is not intended to imply that the USPTO conducted any investigation of this matter.

This file is being forwarded to the Files Repository.

Telephone inquiries specific to this decision may be directed to the undersigned at (571) 272-3215.

Charlema R. Grant
Petitions Attorney
Office of Petitions

UNITED STATES PATENT AND TRADEMARK OFFICE

Commissioner for Patents
United States Patent and Trademark Office
P.O. Box 1450
Alexandria, VA 22313-1450
www.uspto.gov

Paper No. 12

OLE K. NILSSEN
200 N HARRISON ST, SUITE 103
ALGONQUIN, IL 60102

COPY MAILED

FEB 28 2006

OFFICE OF PETITIONS

In re Patent No. 5,164,637 :
Issue Date: November 17, 1992 :
Application No. 07/743,216 :
Filed: August 9, 1991 :
Patentee: Ole K. Nilssen :

ON PETITION

This is a notice regarding your request for acceptance of a fee deficiency submission under 37 CFR 1.28. On September 1, 1998, the Court of Appeals for the Federal Circuit held that 37 CFR 1.28(c) is the sole provision governing the time for correction of the erroneous payment of the issue fee as a small entity. **See DH Technology v. Synergystex International, Inc. 154 F.3d 1333, 47 USPQ2d 1865 (Fed. Cir. Sept. 1, 1998).**

The Office no longer investigates or rejects original or reissue applications under 37 CFR 1.56. **1098 Off. Gaz. Pat. Office 502 (January 3, 1989)**. Therefore, nothing in this Notice is intended to imply that an investigation was done.

Your fee deficiency submission under 37 CFR 1.28 is hereby **ACCEPTED**.

This application is no longer entitled to small entity status. Accordingly, all future fees paid in this application must be paid at the large entity rate.

Telephone inquiries concerning this decision should be directed to the undersigned at (571) 272-3229.

Retta Williams

Retta Williams
Petitions Examiner
Office of Petitions

UNITED STATES PATENT AND TRADEMARK OFFICE

Commissioner for Patents
United States Patent and Trademark Office
Alexandria, Virginia 22314
www.uspto.gov

JUL 12 2007

Margaret J. Sampson
Vinson & Elkins, L.L.P.
2300 First City Tower
1001 Fannin
Houston, TX 77002-6760

In re: Patent Term Extension Application for U.S. Patent No. RE 34,579

DENIAL OF APPLICATION FOR EXTENSION OF PATENT TERM AND DENIAL OF APPLICATION FOR INTERIM EXTENSION

Somerset Pharmaceuticals, Inc. ("Somerset") is the owner of record of U.S. Patent No. RE 34,579 (the '579 patent). Somerset filed an Application for Extension of Patent Term ("Patent Term Extension Application") under 35 U.S.C. § 156 and 37 C.F.R. § 1.740 in the United States Patent and Trademark Office ("the Office") and later filed an application for interim extension of the term of the '579 patent ("Interim Extension Application") under 35 U.S.C. § 156(e)(2) and 37 C.F.R. § 1.760. Both the Patent Term Extension Application and the Interim Extension Application are denied.

I. FACTUAL BACKGROUND

1. On February 27, 2006, the FDA approved under 21 U.S.C. § 355 Somerset's drug product EMSAM® (selegiline transdermal system) patches, which contain selegiline as the single active ingredient, for the treatment of depression in adults.

2. On April 27, 2006, Somerset filed its Patent Term Extension Application with the Office. In that application, Somerset sought to extend the term of the '579 patent. The '579 patent, which provides protection for EMSAM®, will expire by operation of law on August 18, 2007.

3. On December 22, 2006, after reviewing Somerset's Patent Term Extension Application, the Office sent a letter to the FDA pursuant to the Memorandum of Understanding Between the Office and the FDA, available at 52 Fed. Reg. 17830-17832 (May 12, 1987) (hereinafter "MOU"),[1] seeking input from the FDA. In that letter, the Office indicated that it did not believe

---

[1] Under the MOU, the Office's standard policy is to request input from the FDA prior to making a final patent term extension determination. As the agency tasked with regulatory review of drug products, the FDA has access to records not otherwise available to the Office. Thus, the FDA may be able to provide the Office with information not only as to the

that the '579 patent was eligible for a patent term extension because not all of the statutory requirements for extension set forth in § 156 were met. Specifically, the Office stated that it did not believe that EMSAM® represented the first commercial marketing or use of the active ingredient selegiline as required under § 156(a)(5)(A) because the Office understood that the hydrochloride salt form of selegiline had been previously approved by the FDA under 21 U.S.C. § 355. The Office requested the FDA's assistance "in confirming that the product identified in the application, EMSAM® (selegiline transdermal system), has been subject to a regulatory review period within the meaning of 35 U.S.C. § 156(g) before its first commercial marketing or use and that the application for patent term extension was filed within the sixty-day period after the product was approved."

4. On February 2, 2007, counsel for Somerset met with representatives of the Office to discuss Somerset's Patent Term Extension Application.

5. On February 21, 2007, Somerset filed an its Interim Extension Application, seeking a one-year interim extension of the term of the '579 patent, i.e., until August 18, 2008.

6. On July 12, 2007, the FDA responded to the Office's December 22nd letter, stating that its "review also indicates that the marketing of EMSAM® under NDA 021336 does not represent that first permitted commercial marketing or use of this 'product.'" In particular, the FDA explained that it previously approved several new drugs with selegeline as the active ingredient. Thus, the FDA concurred in the Office's conclusion that "the '579 patent is not eligible for extension under 35 U.S.C. § 156, because the same product has previously been approved as a human drug under 21 U.S.C. § 355."

II. DISCUSSION

A. Patent Term Extension Application

Section 156(a) sets forth several requirements that must be met before the Director can extend the term of a patent. See 35 U.S.C. §§ 156 (a)(1)-(a)(5), (d)(1), & (e)(1) (setting forth the requirements that must be satisfied for a patent term extension). The Office does not dispute that Somerset satisfies all of the requirements for a patent term extension set forth in the various paragraphs of § 156, except for the requirement found in § 156(a)(5)(A). That paragraph requires that "the permission for the commercial marketing or use of the product . . . [be] the first permitted commercial marketing or use of the product under the provision of law under which such regulatory review period occurred." Thus, the Office's determination of whether the '579 patent is eligible for extension turns on whether the permission for the commercial marketing or use of EMSAM® is the first permitted commercial marketing or use of the "product" under the

---

length of the regulatory review process and the date of approval, but also as to any disqualifying prior approvals of a product that is, by statute, considered to be the same as the product at issue.

provision of law under which such regulatory review period occurred, here, 21 U.S.C. § 355. That question in turn depends on the meaning of the statutory term "product."

The term "product" is defined in § 156(f) as follows:

> (f) For purposes of this section:
> (1) The term "product" means:
> (A) A drug product . . .
> (2) The term "drug product" means the active ingredient of –
> (A) A new drug, antibiotic drug, or human biological product . . . including any salt or ester of the active ingredient, as a single entity or in combination with another active ingredient.

35 U.S.C. § 156 (f) (emphasis added).

By the explicit terms of § 156(f)(2), the term "product," as it relates to a human drug product, means the active ingredient of the new drug product. And, also by the explicit terms of § 156(f)(2), the term "active ingredient" encompasses "any salt or ester of the active ingredient." The term "active ingredient" thus includes: (i) non-salified forms of a molecule; (ii) non-esterified forms of a molecule; (iii) salts of a molecule; and (iv) esters of a molecule. Because an "active ingredient" includes all four forms, a non-salified, non-esterified form of a molecule is statutorily the same "active ingredient" as a salt or ester of that molecule for purposes of the patent term extension provisions in § 156.

Judicial precedent confirms this reading of the terms "product" and "active ingredient" as used in § 156. Beginning with Fisons v. Quigg, 1988 WL 150851 (D.D.C. 1988), the district court addressed the meaning of the phrase "the first permitted commercial marketing or use of the product," which appears in § 156(a)(5)(A), in connection with Fisons' patent term extension application. After considering the plain language of the statute and its legislative history, the district court concluded that the term "'product' as used in Subsection (5)(A) refers only to the patented drug's active ingredient." 1988 WL 150851 at *5. The Federal Circuit affirmed the district court's interpretation of the definition of "product." Fisons v. Quigg, 876 F.2d 99, 102 (Fed. Cir. 1989).

Building on the Fisons case, in Pfizer v. Dr. Reddy's Labs., Ltd., the Federal Circuit accepted the FDA's definition of the term "active ingredient" as meaning "active moiety," 359 F.3d 1361, 1366 (Fed. Cir. 2004) (citing Abbreviated New Drug Application Regulations: Patent and Exclusivity Provisions, 59 Fed. Reg. 50,338, 50,358 (F.D.A. Oct. 3, 1994)), which in turn means "the molecule or ion excluding those appended portions of the molecule that cause the drug to be an ester, salt . . . responsible for the physiological or pharmacological action of the drug substance," id. (quoting 21 C.F.R. § 314.108(a))(omission in original). Taking Fisons together

with Pfizer, the Federal Circuit thus has interpreted the term "product" in § 156(a)(5)(A) to mean "active ingredient;" interpreted the phrase "active ingredient" to mean "active moiety;" and interpreted the phrase "active moiety" to mean "the molecule or ion excluding those appended portions of the molecule that cause the drug to be an ester, salt . . . responsible for the physiological or pharmacological action of the drug substance." More simply put, it follows from Federal Circuit cases that "product" means the molecule or ion excluding those appended portions of the molecule that cause the drug to be an ester or salt responsible for the physiological or pharmacological action of the drug substance. Therefore, where the FDA has approved the salt or ester of a particular molecule or ion, the "product" that has received FDA approval in terms of § 156(f) is the underlying molecule or ion.

Applying that definition of "product" to the facts here, the Office concludes that the '579 patent is not eligible for patent term extension because the requirement of § 156(a)(5)(A) is not satisfied. At multiple places in its Patent Term Extension Application, Somerset acknowledges that the single active ingredient in EMSAM® is selegiline. See, e.g., pages 2 & 3. At page 20 of its Patent Term Extension Application, Somerset also acknowledges that the FDA approved of ELDEPRYL® (selegiline hydrochloride capsule) for commercial marketing or use prior to approving EMSAM®. The FDA confirmed its prior ELDEPRYL® approval in its July 12, 2007, response. Additionally, the FDA indicated in that response that it also previously approved ZELAPAR® (selegiline hydrochloride tablet) for commercial marketing or use. Both ELDEPRYL® and ZELAPAR® contain selegiline hydrochloride, which is an orally administrable salt form of selegiline. In light of the precedent discussed above, selegiline, and not the hydrochloride salt, is the active ingredient in ELDEPRYL® and ZELAPAR®, just as it is in EMSAM®. Because the FDA previously approved two drugs having the same active ingredient as EMSAM®, the requirement in § 156(a)(5)(A) is not satisfied. That is, EMSAM® is not the first commercial marketing or use of the "product" under 21 U.S.C. § 355 as required by § 156(a)(5)(A).

Somerset argues that '579 patent is eligible for patent term extension because selegiline, the active ingredient in EMSAM®, is different from the active ingredient, selegiline hydrochloride, found in ELDEPRYL®. The Office disagrees. As explained above, both EMSAM® and ELDEPRYL® have the same active ingredient–selegiline. In Pfizer, the Federal Circuit relied upon the FDA's definition of "active ingredient" as ultimately meaning "the molecule or ion excluding those appended portions of the molecule that cause the drug to be an ester, salt . . . responsible for the physiological or pharmacological action of the drug substance." 359 F.3d at 1366 (quoting 21 C.F.R. § 314.108(a))(omission in original and emphasis added). Excluding the hydrochloride portion that causes selegiline to be a salt formulation, selegiline is the molecule that causes the physiological or pharmacological action of ELDEPRYL®. And, it is undisputed that selegiline is the same molecule that causes the physiological or pharmacological action of EMSAM®. Hence, under Pfizer, it is clear that Somerset mischaracterizes the active ingredient in ELDEPRYL® in attempting to secure a term extension for the '579 patent.

Somerset attempts to distinguish Pfizer with the observation that Pfizer arose in the context of a patent infringement action as opposed to a patent term extension application. That distinction does not help Somerset. In Pfizer, the Federal Circuit addressed the same terms ("product" and "active ingredient") in the same statutory provision (§ 156(f)(2)) at issue here . The terms of that statutory provision are to be accorded the same meaning whether in the context of assessing eligibility for a patent term extension or patent infringement. Thus, Pfizer is entirely relevant given that it further developed the definition of the terms "product" and "active ingredient" as used in § 156(f)(2).

Somerset also attempts to bolster its argument by citation to Glaxo Operations UK Ltd. v. Quigg, 894 F.2d 392 (Fed. Cir. 1990). However, Glaxo does not dictate the result urged by Somerset. There, unlike here, the identification of the active ingredient was not in dispute; the Federal Circuit observed that "[i]t is undisputed that cefuroxime axetil is the active ingredient of CEFTIN[®] tablets." Id. at 394. The issue was instead whether a later approval for an ester, cefuroxime axetil, could provide the basis for a patent term extension where the FDA had earlier approved two salts of the underlying organic acid common to both the salts and esters: cefuroxime. Id. at 393-94. The Federal Circuit applied the plain meaning of § 156(f)(2), id. at 395, and concluded that the extension at issue was permissible because the earlier salts were neither salts nor esters of the later ester, id. at 394. That is contrasted to this case where the earlier salts, ELDEPRYL® and ZELAPAR® are, in fact, salts of the product for which the extension is now sought, i.e., selegiline. Thus, while the Federal Circuit concluded in Glaxo that a patent term extension is available for an approved ester, even where the FDA earlier approved salts of the same underlying acid, it does not follow that approval of selegiline can support a patent term extension where the FDA previously approved at least two of its salts. Therefore, Glaxo, in addition to Pfizer, supports the Office's denial of Somerset's Patent Term Extension Application.

Finally, Somerset argues that a patent may be extended based on a regulatory approval of any form of the drug molecule, regardless of any prior approval of another form of the same drug molecule. According to the Somerset's reasoning, prior regulatory approval of a non-salified, non-esterified drug molecule would not bar a patent term extension based on a subsequent regulatory approval of a salt or an ester. Likewise, if the salt of a drug molecule had been approved first (the factual situation in this case), a patent term extension could granted in Somerset's view for a patent covering the non-salified form of that drug molecule. Somerset thus appears to suggest that any drug product subject to regulatory review meets the requirements of § 156(f)(2), with limited exceptions such as for drug products simply having different dosages or for different indications. Somerset's argument echoes the arguments rejected in Fisons. See Fisons, 1988 WL 150851 at *4.

In attempting to justify its position, Somerset relies on its interpretation of the phrase "single entity" in § 156(f)(2), contending: "The 'single entity' language is unambiguous, and indicates that Congress clearly intended 'drug product' to mean the single, specific active ingredient

actually present in the drug product, not a class of compounds that consists of the active ingredient, all salts of the active ingredient, and all esters of the active ingredient." Somerset is mistaken. As the Office pointed out in its December 22nd letter to the FDA, Somerset errs in attempting to use the phrase 'as a single entity' to explain what the active ingredient is, rather than to indicate how it may be present. Section 156(f)(2) states: "The term 'drug product' means the active ingredient of . . . [a] new drug . . ., including any salt or ester of the active ingredient, as a single entity or in combination with another active ingredient." 35 U.S.C. § 156(f)(2) (emphasis added). The phrase "as a single entity" is contrasted using the disjunctive "or" with the phrase "in combination with another active ingredient." By focusing on only a portion of the language, Somerset misses the meaning of the complete phrase. The language at issue in § 156(f)(2) merely specifies that the active ingredient may be present either by itself, or with another active ingredient.

The Office's interpretation of the phrase "single entity" is consistent with the interpretation adopted by the Federal Circuit in Arnold Partnership v. Dudas, 362 F.3d 1338 (Fed. Cir. 2004). There, the court addressed the proper interpretation of § 156(f)(2) in the context of an appeal of the Office's refusal to issue a term extension for a patent covering combined active ingredients, both of which had previously been approved separately. As the Federal Circuit explained, "[156(f)(2)] uses the disjunctive to show that the drug product may consist of either a single active ingredient or an active ingredient in combination with another active ingredient." Id. at 1341 (emphases in original). Thus, it is clear that the phrase "single entity" is to be understood in the context of the phrase "as a single entity or in combination with another active ingredient" to denote an uncombined active ingredient, and not to limit the meaning of "active ingredient" to a particular form of a drug molecule.

Accordingly, for all these reasons, Somerset's Patent Term Extension Application is denied.

B. Interim Extension Application

Because the '579 patent is due to expire on August 18, 2007, Somerset filed its Interim Extension Application to extend the term of the '579 patent while its Patent Term Extension Application was under consideration. Its Interim Extension Application was filed "at least three months prior to the expiration date of the patent," as suggested, but not required, by regulation. See 37 C.F.R. § 1.750.

35 U.S.C. § 156(e)(2), which provides for an interim patent term extension, states:

> If the term of a patent for which an application has been submitted under subsection (d)(1) would expire before a certificate of extension is issued or denied under paragraph (1) respecting the application, the Director shall extend, until such determination is made, the term of the patent for periods of up to one year if he determines that the patent is eligible for extension.

35 U.S.C. § 156(e)(2) (emphases added).

The language of § 156(e)(2) sets forth at least two conditions that must be satisfied in order for the Director to issue an interim extension: (i) the patent at issue "would expire before a certificate of extension is issued or denied," and (ii) the Director must determine "that the patent is eligible for extension." Here, neither condition is met. Because Somerset's Patent Term Extension Application is denied herein, the '579 patent will not expire before a certificate of extension is issued or denied. Moreover, the basis for that denial, i.e., the determination that the '579 patent is not eligible for extension, also requires that the Interim Extension Application be denied. See In re Alcon Labs. Inc., 13 USPQ2d 1115, 1123 (Comm'r Pat. & Trademarks 1989) (denying an interim extension application because the underlying patent term extension application was denied and because the patent was not eligible for extension).

Regarding the second condition for an interim extension, i.e., that a positive eligibility determination is a prerequisite to granting an interim extension, the legislative history of the Hatch-Waxman Act is consistent with the plain language of the statute. In a report on a House version of the Act (H.R. 3605), the Committee on Energy and Commerce explained how the interim extension provision would operate in practice:

> It is possible that the original term of the patent for which extension is sought could expire before a final decision by the Commissioner to issue a certificate of extension. This might occur, for instance, because the determination of due diligence by the Secretary of HHS or Agriculture has not been completed.
>
> In such circumstances, the Commissioner is required to determine whether the patent is eligible for extension under section 156(a), and if it is, to issue a certificate of extension for a period of up to one year.

H.R. Rep. No. 857(I), 98th Cong., 2d Sess. (June 21, 1981), reprinted in 1984 U.S.C.C.A.N. 2647 at 29 (emphasis added). Thus, a positive eligibility determination is a necessary condition for granting an interim extension.

Notwithstanding the clarity of § 156(e)(2), Somerset urges that an interim extension can be granted "to maintain the status quo" during judicial review. As support, Somerset cites In re Reckitt & Colman Prods. Ltd., 230 USPQ 369 (Comm'r of Pat. & Trademarks 1986). In Reckitt, there were conflicting decisions about the correct FDA approval date. While the FDA had determined a date that made the patent term extension application untimely, a district court had found that a later approval date was correct, making the patent term extension application timely. Id. at 370. In those unique circumstances, the Office granted the interim extension because a factor that would bear on the ultimate question of eligibility for extension remained undetermined, and because doing so would be "in harmony" with a district court decision on the

very same question. Id. at 372. Here, the Office has concluded that the '569 patent is not eligible for a patent term extension–nothing remains undetermined, and no district court has rendered a decision on the '569 patent to the contrary. Thus, Somerset's reliance on Reckitt is misplaced.

In short, because Somerset's Patent Term Extension Application is denied herein, and because the '579 patent is not eligible for patent term extension, Somerset's Interim Extension Application is denied.

III. CONCLUSION

Having considered all of Somerset's arguments, including those addressed in detail herein, the Office denies Somerset's Patent Term Extension Application and its Interim Extension Application.

THIS DECISION MAY BE VIEWED AS A FINAL AGENCY ACTION.

Any correspondence with respect to this matter should be addressed as follows:

By mail: Mail Stop Hatch-Waxman PTE
Commissioner for Patents
P.O. Box 1450
Alexandria, VA 22313-1450

By FAX: (571) 273-7755

Telephone inquiries related to this determination should be directed to Kathleen Kahler Fonda at (571) 272-7754.

Robert A Clarke

Robert A. Clarke
Director, Office of Patent Legal Administration

cc: Office of Regulatory Policy
HFD - 7
5600 Fishers Lane (Rockwall II Rm. 1101)
Rockville, MD 20857

Attention: Beverly Friedman

RE: EMSAM® (selegiline)
FDA Docket No.: 2007E-0057

UNITED STATES PATENT AND TRADEMARK OFFICE

Commissioner for Patents
United States Patent and Trademark Office
P.O. Box 1450
Alexandria, VA 22313-1450
www.uspto.gov

OIPE IAP27
JUL 01 2008
PATENT & TRADEMARK OFFICE

COPY MAILED
JUN 23 2008
OFFICE OF PETITIONS

LAW OFFICE OF
JAMES R. YOUNG
11184 N. HURON STREET
DENVER CO 80234

COMPLETED

In re Patent No. 5,201,048
Issue Date: 6 April, 1993
Application No. 07/750,745
Filed: 21 August, 1991
Attorney Docket No. AXX-101A
Patentee(s): Coulter, et al.

DECISION ON PETITION

This is a decision on the petition under 37 C.F.R. §1.378(b), filed 8 May, 2007, to accept an unavoidably delayed payment of a maintenance fee for the above-identified patent.

The Office regrets the delay in addressing this matter, however, the instant petition was presented to the attorneys in the Office of Petitions only at this writing.

NOTES:

(1) There is no indication that Petitioner/Counsel (Petitioner) herein was ever empowered to prosecute the instant application. If Petitioner desires to receive future correspondence regarding this application, the appropriate power of attorney documentation must be submitted. A courtesy copy of this decision will be mailed to Petitioner. However, all future correspondence will be directed to the address of record until such time as appropriate instructions are received to the contrary.

(2) The materials presented heretofore raise certain concerns, *inter alia*:

(a) the documents submitted appear to contain private tax identification information regarding persons and/or entities, which if revealed as public could present significant risk of identity theft—and which information the Office always cautions practitioners to redact from filings. (*See*: MPEP §§724.02 through 724.06. *also*: Identity Theft—Personal Information: http://www.uspto.gov/web/doc/privact.htm .)

Thus, Petitioner may wish to submit replacement materials and seek their substitution for the un-redacted versions from the record; and

(b) while the Office mandates few formalities for statements/declarations, submitted, it does require the express acknowledgment of the statutory and continuing burden of candor. (*See*: MPEP §715.04(II)). Because the two (2) statements submitted in support of the instant petition fail to incorporate these acknowledgements, it would be inappropriate to accept the statements as and/or in support of proof without them.

Thus, if Petitioner wishes to have the statements considered with any renewed petition, Petitioner will wish to include within any statement the formal requirements thereof.

(3) Finally, in brief telephone call alerting Petitioner to the items set forth as 2(a) and (b), above, Petitioner indicated that to obviate a possible/potential conflict he would submit to the Office the address of the patentee/officer of assignee in order that any future decision might be forwarded to that individual. Accordingly, Petitioner is instructed to transmit to that patentee/officer of assignee a copy of the instant decision and provide to the Office evidence of having done so.

The petition under 37 C.F.R. §1.378(b) is **DISMISSED**.

If reconsideration of this decision is desired, a petition for reconsideration under 37 C.F.R. §1.378(e) must be filed within TWO (2) MONTHS from the mail date of this decision. No extension of this 2-month time limit can be granted under 37 C.F.R. §1.136(a) or (b). **Any such petition for reconsideration must be accompanied by the petition fee of $400 as set forth in 37 C.F.R. §1.17(f).** The petition for reconsideration should include an exhaustive attempt to provide the lacking item(s) noted below, since, after a decision on the petition for reconsideration, no further reconsideration or review of the matter will be undertaken by the Director.

BACKGROUND

Patent No. 5,201,048 (the '048 patent) issued on 6 April, 1993. The third maintenance fee could have been paid—but was not—from 6 April, 2004, through 6 October, 2004, or with a surcharge during the period from 7 October, 2004, through 6 April, 2005.

Accordingly, the '048 patent expired at midnight 6 April, 2005, for failure to submit timely the third maintenance fee.

A petition to accept the delayed payment of a maintenance fee under 35 U.S.C. §41(c) and 37 C.F.R. §1.378(b) **must** be accompanied by (1) an adequate showing that the delay was unavoidable, since reasonable care was taken to ensure that the maintenance fee would be paid timely and that the petition was filed promptly after the patentee was notified of, or otherwise became aware of, the expiration of the patent; (2) payment of the appropriate maintenance fee, unless previously submitted; and (3) payment of the surcharge set forth in 37 C.F.R. §1.20(i)(1).

This petition lacks: an adequate showing that the delay was unavoidable, since reasonable care was taken to ensure that the maintenance fee would be paid timely and that the petition was filed promptly after the patentee was notified of, or otherwise became aware of, the expiration of the patent, as set forth above.

FACTS PRESENTED

Petitioner states that the delay in payment of the third maintenance fee was unavoidable due to financial difficulties at the time in question—*see*: "Declaration of Daniel N. Fishman"[1] and

---

[1] This declaration states as follows:

DECLARATION OF DANIEL N. FISHMAN

1. I, Daniel N. Fishman, am a registered patent attorney (USPTO Registration Number 35,512, Colorado Registration 19760).
2. On or about 30 November, 2006, I first met with Mr. Frank Beck—a shareholder in Axxess Technologies, Inc. ("Axxess"). Mr. Beck was referred to me by Mr. James Young—the patent attorney of record who prepared, filed and prosecuted IS Patent 5,201,048 (the Patent") assigned on its face to Axxess Technologies, Inc. ("Axxess").
3. Mr. Beck wanted to consult with me about the procedures to revive (sic) the Patent after failure to pay te 12th year maintenance fee. He explained to me that though Axxess was aware of the need to pay the 12th year maintenance fee for the Patent prior to expiration of the deadline in April 2005, Axxess had no money then and still has no money(nor any other liquid assets).
4. Mr. Beck explained that Axxess was hopeful they could locate some "contingent fee" attorneys or other licensees who would pay or advance the costs to revive the Patent and then generate income from the licensing and/or other enforcement of the Patent.
5. Without fully investigating all the details of the procedure t revive (sic) such an abandoned/expired patent, I advised Mr. Beck that there existed two procedures to revive an expired patent: either granting of a petition to revive an unintentionally abandoned (sic) or granting of a petition to revive for unavoidable abandonment (sic). I advised Mr. Beck that I would have to research the procedures more closely but that until a source of funds was located we could not file such a petition.
6. I explained to Mr. Beck that my firm (Duft Bornsen & Fishman, LLP, in Boulder Colorado) does not generally handle litigation matters as would be required to enforce the Patent and I suggested to Mr. Beck that I would make some phone calls to patent litigation firms in the area with whom I had contact. I suggested that since Axxess had no funds to pay for the needed revival (sic) that we should try to locate a contingent fee litigation firm who may advance the needed fee if they were interested in taking the case. Mr. Beck also suggested he was aware of a group based in California who had expressed some interest in such an arrangement though with few specific details developed as of that date in December. (sic)
7. Mr. Beck introduced me to Mr. Thomas Richards (President of Axxess and a co-inventor of the Patent) at a subsequent meeting in late December. We discussed these same issues as noted above at this later meeting.
8. Over the following weeks through early January, I called some patent litigation firms with whom I had personal contacts but none were interested in the case as a contingent fee matter. The firms I spoke with were not interested regardless of the subject matter or the strength of ht case. Rather, according to the partners in those firms I contacted, internal business issues of their respective firms precluded the option of accepting the case as a contingent fee matter.

"Declaration of Thomas A. Richards."[2] (As noted above, the declarations in question are insufficient as to the formal requirements. (*See*: MPEP §§715.04(II)) Thus, they are accepted here only for informational purposes and not as offers of proof.).

---

9. In early January I suggested to Mr. Beck that I might gather an ad-hoc team of attorneys including myself that might be interested in working jointly on his matter on a contingent fee basis. Introduced Mr. Beck and Mr. Richards to Mr. Steven Cook and Mr. Rick Bland (a Colorado trial attorney and a Colorado corporate law attorney, respectively). Teamed with me, Mr. Cook and Mr. Bland agreed that we might be interested in a contingent fee arrangement to enforce the Patent against certain potential infringers but that we would need to investigate the facts more thoroughly with help from Mr. Richards.
10. To the present date we continue to investigate the strength of the Patent as regards various possible infringers. The investigation has been tedious due to the nature of the patented method. It is not easy to discover the internal search methods used by a potential infringer form (sic) "black box" engineering techniques observing the operation of a potentially infringing method in use.
11. Though a final determination has yet to be made as to which potential infringer to pursue and when to file a lawsuit, I have decided that the matter is of sufficient value to advance the costs for this petition for revival. (sic)
12. I was generally aware of the two year statutory limitation on filing a petition to revive for unintentional abandonment. For at least two reasons that deadline came and went without filing such a petition. First we (Mr. Cook, Mr. Bland and I) had not yet completed our study to make a firm decision as to the value of the cases by early April 2007 (the two year deadline for filing such a petition for revival of an unintentionally abandoned parent (sic)). Since Axxess was reliant on us a possible contingent fee attorneys to advance the necessary costs, the delay caused by our need to investigate the strength of the case presented an unavoidable delay in reviving the Patent. Second, when I read the relevant rules and procedures (CFR and MPEP) more carefully, it was clear to me that the reason for the abandonment (sic) is not properly certified as "unintentional." In this case the abandonment was due to the inability of Axxess to pay the requisite maintenance fee.
13. It is my understanding from investigating the status of Axxess that at all times since at least about 2000 to the present day Axxess has had no funds or liquid assets available to pay the 12th year maintenance fee that was due in April 2005. Thus the entire delay in filing this petition up to the date of my initial meeting with Mr. Beck (and to the present day) was unavoidable.
14. The delay in filing this petition from the date of my Meeting with Mr. Beck to the present was unavoidable in that some reasonable investigation was required to determine the strength of the possible contingent fee litigation.
15. The entire delay in payment of the 12 year maintenance fee, from a date well in advance of the deadline in April 2005 up to an including the date of this petition was an unavoidable delay. Axxess has, and still has, no funds to pay the requisite fees. No larger patent litigation firm that I contacted on behalf of Axxess through December 2006 and early January 2007 was interested I the matter as a contingent fee patent infringement action. The California group that had contact Mr. Beck had not, to my knowledge, suggested enough details to offer to advance or handle in any way the needed petition process. I had to complete some initial investigation of the strength of the possible contingent fee litigation before deciding to advance the necessary fees.
16. The accompanying declaration of Mr. Richards and the supporting corporate tax returns for Axxess further evidence the inability of Axxess to pay the maintenance fees (let alone the petition fees (sic) now also due).
17. In view of the above facts and those recited in Mr. Richards' declaration, I urge that the accompanying petition for revival of an unavoidably abandoned patent (sic) be granted in this matter.
18. Further in view of the likelihood of imminent litigation to enforce the Patent against one or more possible infringing parties, I urge tha this petition be considered and granted with all due haste.

Date: 8 May 2007 Respectfully submitted, /s/Daniel N. Fishman, Reg. No. 35,512

[2] This declaration states as follows:

DECLARATION OF THOMAS A. RICHARDS

1. I, Thomas A. Richards, am a co-inventor of the United States patent 5,201,048 ("the Patent") assigned on its face to Axxess Technologies, Inc. ("Axxess") of which I am President and a substantial shareholder.
2. As President of Axxess, I was aware that the 12th year maintenance fee for the Patent was due in late 2004 and no later than April 2005. Mr. James Young (now in Austin Texas) was our patent attorney involve in preparing , fining and prosecuting the Patent. Mr. Young sent Axxess letters for various due dates and fees through the prosecution including reminder letters regarding the deadlines for payment of maintenance fees for the Patent after issuance. Though my corporate records do not have a copy of the letters from Mr. Young regarding the 12th year maintenance fee deadline, I recall receiving the ose letters.
3. Assess has had no money or liquid assets since at least 2000 and thus had no funds to pay the 12th year maintenance fees due in 2005. I personally paid the 8th year maintenance fee due in 2001 in hopes of keeping the patent from becoming abandoned/expired.
4. Attached hereto as Exhibit A are copies of relevant portions of the corporate tax returns for Axxess from 1992 through 1998 and 2003 through 2006 further evidencing my statement that Axxess had and has no income or assets to pay the 12th years maintenance fee (no tax returns were filed for the years 1999 through 2002 and correction therefore were submitted in 2003 with IRS guidance).
5. I personally had no available funds to pay the 12th year maintenance fees when due and still have no funds available to make the payment today. I am 76 years old and live on a fixed income from Social Security benefits.
6. At all times from well before the due date for the 12th year maintenance fee through the date of this declaration, Axxess has had no funds to pay the maintenance fee (let alone the petition (sic) fees now due or any legal fees to pursue enforcement or licensing of the Patent).
7. It has never been my intention, or the intention of Axxess, to abandon (sic) the Patent. I continue working to this day on the computer programs I helped develop that embody the claimed features of the Patent. I continue to hope to find some niche market to exploit the technology that underlies the Patent. Quite the opposite from any intent to abandon the Patent, only the lack of funds in Axxess has rendered it impossible to pay the 12th year maintenance fee and thus the entire delay has been unavoidable. Attached hereto as Exhibit

LAW AND ANALYSIS

The Director may accept late payment of the maintenance fee if the delay is shown to the satisfaction of the Director to have been "unavoidable." 35 U.S.C. §41(c)(1).

The acceptance of the late payment of a maintenance fee is considered under the same standard as that for reviving an abandoned application under 35 U.S.C. §133 because 35 U.S.C. §41(c)(1) uses the identical language, i.e. "unavoidable delay."[3]

Decisions on reviving abandoned applications have adopted the "reasonably prudent person" standard in determining if the delay in responding to an Office action was "unavoidable."[4]

In addition, decisions on revival are made on a case-by-case basis, taking all the facts and circumstances into account.[5]

Finally, a petition to revive an application as unavoidably abandoned cannot be granted where a Petitioner has failed to meet his or her burden of establishing the cause of the unavoidable delay.[6]

B as evidence of my intent to continue developing the technology is a recent grant proposal to the Department of Education (later rejected) to develop the technology of the Patent for educational applications.

8. With the assistance of Mr. Frank Beck (a shareholder of Axxess) Axxess started to look into the possibility of locating a group or law firm that would enforce the Patent rights to generate licensing revenues or other revenues from enforcement of the patent. Mr. Beck felt there was some interest from an investment group in California and felt the need to locate a new patent attorney to look into the status of the Patent. Mr. Young referred us to Mr. Daniel Fishman—a patent attorney in Boulder Colorado with whom Mr. Young was familiar.
9. I first met with Mr. Fishman in mid to late December 2006 (shortly before the holiday season and following Mr. Beck's earlier initial meeting with Mr. Fishman). In our meeting m we discussed the possibility of reviving (sic) the Patent and the possibility of generating revenues from the Patent by licensing or b enforcement actions against certain potential infringers. Since Axxess has and still has no funds, we also consulted with Mr. Fishman regarding possible local representation to enforce the Patent against one or more potential infringers on a contingent fee basis.
10. By early January, Mr. Fishman reported that the larger firms in the area he had contacted on our behalf were not interested in a contingent fee patent infringement suit. However, Mr. Fishman introduced me to an ad hoc team of attorneys including himself (for technical patent expertise), Mr. Steve Cook (an experienced trial attorney) , and Mr. Rick Bland (an attorney specializing in corporate legal matters). At a first meeting with this ad hoc team, we jointly discussed the Patent and the merits of a possible patent infringement action on a contingent fee basis. In our meeting, we had broad agreement that further study was needed to review technical information regarding some identified potential infringers. That study started in January 2007 and continues to this day. It has proven difficult to determine the inner workings of potential infringing products and services.
11. Though the study discussed above continues, Mr. Fishman has determined that he potential for success in a patent infringement action is high enough that he is prepared to advance the costs to revive the Patent and file the attached petition to revive. Thus the entire delay—up to the date of this petition—has been unavoidable.
12. In view of our continued intent to develop the technology of the patent and the unavoidable delay in payment of the 12th year maintenance fee, I ask that the associated petition be granted with all haste.

Date: May 4, 2007 Respectfully submitted, /s/Thomas A. Richards, President/Axxess Technologies Inc.

[3] Ray v. Lehman, 55 F.3d 606, 608-09, 34 USPQ2d 1786, 1787 (Fed. Cir. 1995) (quoting In re Patent No. 4,409,763, 7 USPQ2d 1798, 1800 (Comm'r Pat. 1988)).

[4] Ex parte Pratt, 1887 Dec. Comm'r Pat. 31, 32-33 (Comm'r Pat. 1887)(the term "unavoidable" "is applicable to ordinary human affairs, and requires no more or greater care or diligence than is generally used and observed by prudent and careful men in relation to their most important business"); In re Mattullath, 38 App. D.C. 497, 514-515 (D.C. Cir. 1912); and Ex parte Henrich, 1913 Dec. Comm'r Pat. 139, 141

[5] Smith v. Mossinghoff, 671 F.2d 533, 538, 213 USPQ 977, 982 (D.C. Cir. 1982).

[6] Haines v. Quigg, 673 F. Supp. 314, 316-17, 5 USPQ2d 1130, 1131-32 (N.D. Ind. 1987).

In essence, Petitioner must show that he was aware of the need to pay the maintenance fee, and to that end was tracking it, or had engaged someone to track it before the expiration, but when the fee came due, was "unavoidably" prevented from making the maintenance fee payment due to his/their financial and medical conditions until the petition was filed.

In determining whether a delay in paying a maintenance fee was unavoidable, one looks to whether the party responsible for payment of the maintenance fee exercised the due care of a reasonably prudent person.[7]

It is incumbent upon the patent owner to implement steps to schedule and pay the fee, or obligate another to do so.[8] That is, the regulations at 37 C.F.R. §1.378(b)(3) require a showing of the steps in place to pay the maintenance fee, and the record currently lacks a showing that any steps were emplaced by Petitioner or anyone else.

In the absence of a showing that a Petitioner or anyone else was engaged in tracking the maintenance fee due dates, and that party had in fact been tracking the due dates with a reliable tracking system, such as would be used by prudent and careful men in relation to their most important business, a Petitioner cannot reasonably show that the delay was unavoidable delay.[9] Put otherwise, the issues of Petitioner's financial problems are immaterial in the absence of a showing that these, and not the lack of any steps in place to pay the fee, caused or contributed to the delay.

A showing of unavoidable delay based upon financial condition must establish that the financial condition of the Petitioner during the entire period of the delay was such as to excuse the delay.[10]

The showing of record as of this writing is inadequate to establish unavoidable delay within the meaning of 37 C.F.R. §1.378(b)(3).

Thus far, there is suggestion that original delay—i.e., that which preceded and led to the expiration of the '048 patent (i.e., up until midnight 6 April, 2005) due to non-payment of the third maintenance fee—may be attributable to financial constraints.

However, as indicated herein a month-by-month accounting of funds available (or not) for payment is required to address that factual issue.

Thereafter, there is a suggestion that the delay(s) occurring following expiration—particularly that between 30 November, 2006, and midnight 6 April, 2007—may be attributable to the action or inaction of Counsel: i.e., the failure to file timely a petition pursuant to 37 C.F.R. §1.378(c).

---

[7] Ray, 55 F3d at 608-609, 34 USPQ2D at 1787.
[8] See California Medical Products v. Technol. Med. Prod., 921 F.Supp 1219, 1259 (D. Del. 1995).
[9] In re Katrapat, 6 USPQ2d 1863, 1867-1868 (Comm'r Pat. 1988); California, supra.
[10] See Ex parte Murray, 1891 Dec. Comm'r Pat. 130, 131 (1891).

In view of the formal insufficiency of the declarations, one is left with few certain facts at this writing. These include, but may not be limited to, financial requirements herein: e.g., as of 6 April, 2007—the last day available for payment of the third maintenance fee ($1,900.00) with the surcharge upon allegation of unintentional delay ($1,640.00)—the total funds due were $3,540.00. As one registered to practice before the Office, Petitioner Daniel N. Fishman had or should have had no uncertainty in that regard. Moreover, according to the timetable set out by Petitioner Daniel N. Fishman himself in his declaration (albeit formally insufficient) Petitioner had at least from 30 November, 2006, until 6 April, 2007, to so advise his clients Axxess and Messrs. Beck and Richard of these financial facts. However, despite extensive discussion of the need for investigation of several other matters, these details are not among those set forth. (In any renewed petition, Petitioner is to detail the basis for this void in his prior narrative.)

Stated another way, rather than set a focus on the near-term problem of acting to reinstate the instant patent, Counsel describes having spent the better part of more than four months attempting to map out an enforcement strategy for a patent that could not be enforced until it was reinstated.

In doing so, Counsel describes having allowed to pass the opportunity for his clients to seek the relatively simple reinstatement of the instant patent under the standard of unintentional delay.

The general rule is that errors of a party's Counsel are imputed to and bind the party by the consequences, for it is the party who made the selection of Counsel.[11] (However, the general rule does not apply in those cases in which there is a showing that deception of Counsel caused the delay in question.[12])

Thus, the showing of record as of this writing is insufficient to establish adequately that Petitioner's entire delay in paying the second maintenance fee from midnight 6 April 2005, until the petition was filed on or about 8 May, 2008, was unavoidable within the meaning of 35 U.S.C. §41(c) and 37 C.F.R. §1.378(b).

A complete showing, with supporting documentation, is required of the financial condition of Petitioner or the party responsible for payment of the maintenance fees. Such showing should include all income, expenses, assets, credit, and obligations, which made the delay in payment of the maintenance fee from 6 April, 2005, until the filing of the petition on or about 8 May, 2007, "unavoidable." A monthly breakdown is preferred.

Windows for Payment

As to whether Petitioner or party with demonstrable responsibility therefor had in place a system to ensure payment of the second maintenance fee when due for the instant patent:

---

[11] Link v. Wabash Railroad Co., 370 U.S. 626, 633-634, 82 S.Ct. 1386, 1390-91 (1962).

[12] *See*: e.g., In re Lonardo, 17 USPQ2d 1455 (Comm'r Pat. 1990): delay caused by deception of applicant by applicant's representative.

- within the first window for payment of the maintenance fee alone—from 6 April, 2004, through midnight 6 October, 2004: as of this writing Petitioner's showing is insufficient;

- within the second window for payment of the maintenance fee and small surcharge—from 7 October, 2004, through midnight 6 April, 2005: as of this writing Petitioner's showing is insufficient;

- within the third window for payment of the maintenance fee and the surcharge in connection with an allegation of unintentional delay—from 7 April, 2005, through midnight 7 April, 2007: as of this writing Petitioner's showing is insufficient;

- within the fourth window–for payment of the maintenance fee and the surcharge in connection with an allegation of unavoidable delay–which also opened on 7 April, 2005: as of this writing Petitioner's showing is insufficient.

(As noted above, the declarations submitted thus far are insufficient as to the formal requirements. (*See*: MPEP §§715.04(II)) Accordingly, they have been accepted here only for informational purposes and not as offers of proof in support of a decision granting a petition .)

Therefore, absent completion of a documentary showing as to the instant matter regarding the patentee/assignee planning for and seeking to pay timely the third maintenance fee, a petition cannot be granted under the provisions of 37 C.F.R. §1.378(b).

Direct Evidence

In essence, Petitioner must show that he was aware of the need to pay the maintenance fee, and to that end was tracking it, or had engaged someone to track it before the expiration, but when the fee came due, was financially unable to make the payment until the petition was filed. The showing should include documentary proof of the maintenance fee tracking system, the entry of this patent in that system and an explanation of how the system worked.

Petitioner must "provide any *direct evidence* proving exactly" what records and systems were in place to satisfy the showing required under 37 C.F.R. §1.378(b).[13]

The availability of applications and application papers online to applicants/practitioners who diligently associate their Customer Number with the respective application(s) now provides an applicant/practitioner on-demand information as to events/transactions in an application.

---

[13] See: Krahn v. Commissioner, 15 USPQ2d 1823 (E.D. Va. 1990):

> The Commissioner did not abuse his discretion in ruling that this evidence was insufficient to prove an unavoidable delay * * * . The * * * procedure[s] set out in the PTO regulations were specifically designed to provide patent applicants with a clear procedure to protect themselves from exactly the situation which has arisen in this case. Plaintiff failed to follow these procedures. The Commissioner properly ruled that the alternative means employed by the plaintiff were inadequate * * * . Plaintiff still failed to provide any direct evidence proving exactly [his allegations]. The procedures set out in the PTO's regulations are designed to provide the type of direct evidence needed * * * . Had plaintiff's counsel followed these procedures, as a 'prudent and careful man' would have **Error! Main Document Only.**done in conducting 'his most important business,' then he would have been able to produce sufficient evidence to support a showing of unavoidable delay." (Emphasis supplied.)

Out of an abundance of caution, Petitioners always are reminded that those registered to practice *and* all others who make representations before the Office must inquire into the underlying facts of representations made to the Office and support averments with the appropriate documentation–since all owe to the Office the continuing duty to disclose.[14]

CONCLUSION

Accordingly, the petition under 37 C.F.R. §1.378(b) is **dismissed**.

Further correspondence with respect to this matter should be addressed as follows:

By Mail: Mail Stop PETITIONS
Commissioner for Patents
Post Office Box 1450
Alexandria, VA 22313-1450

By Hand: Customer Service Window
Mail Stop Petitions
Randolph Building
401 Dulany Street
Alexandria, VA 22314

By FAX: (571) 273-8300
ATTN: Office of Petitions

[14] See supplement of 17 June, 1999. The Patent and Trademark Office is relying on Petitioner's duty of candor and good faith and accepting a statement made by Petitioner. See Changes to Patent Practice and Procedure, 62 Fed. Reg. at 53160 and 53178, 1203 Off. Gaz. Pat. Office at 88 and 103 (responses to comments 64 and 109)(applicant obligated under 37 C.F.R. §10.18 to inquire into the underlying facts and circumstances when providing statements to the Patent and Trademark Office). See specifically, the regulations at 37 C.F.R. §10.18.

While telephone inquiries regarding this decision may be directed to the undersigned at (571) 272-3214, it is noted that all practice before the Office is in writing (see: 37 C.F.R. §1.2[15]) and the proper authority for action on any matter in this regard are the statutes (35 U.S.C.), regulations (37 C.F.R.) and the commentary on policy (MPEP). Therefore, no telephone discussion may be controlling or considered authority for Petitioner's action(s).

/John J. Gillon, Jr./
John J. Gillon, Jr.
Senior Attorney
Office of Petitions

cc:
DANIEL N. FISHMAN
DUFT BORNSEN & FISHMAN LLP
1526 SPRUCE STREET/STE. 302
BOULDER, CO. 80302

[15] The regulations at 37 C.F.R. §1.2 provide:
§1.2 Business to be transacted in writing.
All business with the Patent and Trademark Office should be transacted in writing. The personal attendance of applicants or their attorneys or agents at the Patent and Trademark Office is unnecessary. The action of the Patent and Trademark Office will be based exclusively on the written record in the Office. No attention will be paid to any alleged oral promise, stipulation, or understanding in relation to which there is disagreement or doubt.

UNITED STATES PATENT AND TRADEMARK OFFICE

Commissioner for Patents
United States Patent and Trademark Office
P.O. Box 1450
Alexandria, VA 22313-1450
www.uspto.gov

PROSKAUER ROSE LLP
ONE INTERNATIONAL PLACE 14TH FL
BOSTON MA 02110

COPY MAILED

AUG 16 2006

OFFICE OF PETITIONS

In re Patent No. 5,396,043	:	
Issued: March 7, 1995	:	
Application No. 07/753,395	:	ON PETITION
Filed: August 30, 1991	:	
Attorney Docket No. H0318/	:	

This is in response to the paper filed February 27, 2006 under 37 CFR 1.27(g)(2) requesting that status as a Small Entity be removed.

In accordance with the February 27, 2006 request, the request is **GRANTED** and status as a Small Entity has been removed.

Telephone inquiries concerning this matter may be directed to the undersigned Petitions Attorney at (571) 272-3212.

Patricia Faison-Ball

Patricia Faison-Ball
Senior Petitions Attorney
Office of Petitions

Under the Paperwork Reduction Act of 1995, no persons are required to respond to a collection of information unless it displays valid OMB control number.

PETITION TO ACCEPT UNINTENTIONALLY DELAYED PAYMENT OF MAINTENANCE FEE IN AN EXPIRED PATENT (37 CFR 1.378(c))

Patent Number	Issue Date (YYYY-MM-DD)	Application Number	Filing Date (YYYY-MM-DD)	Docket Number (if applicable)
5176663	1993-01-05	07759139	1991-09-11	VOGE-003/00US 305892-2010

CAUTION: Maintenance fee (and surcharge, if any) payment must correctly identify: (1) the patent number and (2) the application number of the actual U.S. application leading to issuance of that patent to ensure the fee(s) is/are associated with the correct patent. 37 CFR 1.366(c) and (d).

SMALL ENTITY
☒ Patentee claims, or has previously claimed, small entity status. See 37 CFR 1.27.

LOSS OF ENTITLEMENT TO SMALL ENTITY STATUS
☐ Patentee is no longer entitled to small entity status. See 37 CFR 1.27(g)

NOT Small Entity			Small Entity		
	Fee	Code		Fee	Code
○	3 ½ year	(1551)	○	3 ½ year	(2551)
○	7 ½ year	(1552)	○	7 ½ year	(2552)
○	11 ½ year	(1553)	◉	11 ½ year	(2553)

SURCHARGE
The surcharge required by 37 CFR 1.20(i)(2) (Fee Code 1558) must be paid as a condition of accepting unintentionally delayed payment of the maintenance fee.

MAINTENANCE FEE (37 CFR 1.20(e)-(g))
The appropriate maintenance fee must be submitted with this petition.

STATEMENT
THE UNDERSIGNED CERTIFIES THAT THE DELAY IN PAYMENT OF THE MAINTENANCE FEE TO THIS PATENT WAS UNINTENTIONAL

PETITIONER(S) REQUEST THAT THE DELAYED PAYMENT OF THE MAINTENANCE FEE BE ACCEPTED AND THE PATENT REINSTATED

THIS PORTION MUST BE COMPLETED BY THE SIGNATORY OR SIGNATORIES

37 CFR 1.378(d) states: "Any petition under this section must be signed by an attorney or agent registered to practice before the Patent and Trademark Office, or by the patentee, the assignee, or other party in interest."

I certify, in accordance with 37 CFR 1.4(d)(4) that I am

◉ An attorney or agent registered to practice before the Patent and Trademark Office

○ A sole patentee

○ A joint patentee; I certify that I am authorized to sign this submission on behalf of all the other patentees.

○ A joint patentee; all of whom are signing this e-petition

○ The assignee of record of the entire interest

Patent Practitioner			
A signature of the applicant or representative is required in accordance with 37 CFR 1.33 and 10.18. Please see 37 CFR 1.4(d) for the form of the signature			
Signature	/Christopher R. Hutter/	Date (YYYY-MM-DD)	2007-01-04
Name	Christopher R. Hutter	Registration Number	41087

This collection of information is required by 37 CFR 1.378(c). The information is required to obtain or retain a benefit by the public which is to file (and by the USPTO to process) an application. Confidentiality is governed by 35 U.S.C. 122 and 37 CFR 1.11 and 1.14. This collection is estimated to take 1 hour to complete, including gathering, preparing, and submitting the completed application form to the USPTO. Time will vary depending upon the individual case. Any comments on the amount of time you require to complete this form and/ or suggestions for reducing this burden, should be sent to the Chief Information Officer, U.S. Patent and Trademark Office, U.S. Department of Commerce, P.O. Box 1450, Alexandria, VA 22313-1450. DO NOT SEND FEES OR COMPLETED FORMS TO THIS ADDRESS. **This form can only be used when in conjunction with EFS-Web. If this form is mailed to the USPTO, it may cause delays in reinstating the patent.**

Privacy Act Statement

The Privacy Act of 1974 (P.L. 93-579) requires that you be given certain information in connection with your submission of the attached form related to a patent application or patent. Accordingly, pursuant to the requirements of the Act, please be advised that: (1) the general authority for the collection of this information is 35 U.S.C. 2(b)(2); (2) furnishing of the information solicited is voluntary; and (3) the principal purpose for which the information is used by the U.S. Patent and Trademark Office is to process and/or examine your submission related to a patent application or patent. If you do not furnish the requested information, the U.S. Patent and Trademark Office may not be able to process and/or examine your submission, which may result in termination of proceedings or abandonment of the application or expiration of the patent.

The information provided by you in this form will be subject to the following routine uses:

1. The information on this form will be treated confidentially to the extent allowed under the Freedom of Information Act (5 U.S.C. 552) and the Privacy Act (5 U.S.C. 552a). Records from this system of records may be disclosed to the Department of Justice to determine whether the Freedom of Information Act requires disclosure of these record s.

2. A record from this system of records may be disclosed, as a routine use, in the course of presenting evidence to a court, magistrate, or administrative tribunal, including disclosures to opposing counsel in the course of settlement negotiations.

3. A record in this system of records may be disclosed, as a routine use, to a Member of Congress submitting a request involving an individual, to whom the record pertains, when the individual has requested assistance from the Member with respect to the subject matter of the record.

4. A record in this system of records may be disclosed, as a routine use, to a contractor of the Agency having need for the information in order to perform a contract. Recipients of information shall be required to comply with the requirements of the Privacy Act of 1974, as amended, pursuant to 5 U.S.C. 552a(m).

5. A record related to an International Application filed under the Patent Cooperation Treaty in this system of records may be disclosed, as a routine use, to the International Bureau of the World Intellectual Property Organization, pursuant to the Patent Cooperation Treaty.

6. A record in this system of records may be disclosed, as a routine use, to another federal agency for purposes of National Security review (35 U.S.C. 181) and for review pursuant to the Atomic Energy Act (42 U.S.C. 218(c)).

7. A record from this system of records may be disclosed, as a routine use, to the Administrator, General Services, or his/her designee, during an inspection of records conducted by GSA as part of that agency's responsibility to recommend improvements in records management practices and programs, under authority of 44 U.S.C. 2904 and 2906. Such disclosure shall be made in accordance with the GSA regulations governing inspection of records for this purpose, and any other relevant (i.e., GSA or Commerce) directive. Such disclosure shall not be used to make determinations about individuals.

8. A record from this system of records may be disclosed, as a routine use, to the public after either publication of the application pursuant to 35 U.S.C. 122(b) or issuance of a patent pursuant to 35 U.S.C. 151. Further, a record may be disclosed, subject to the limitations of 37 CFR 1.14, as a routine use, to the public if the record was filed in an application which became abandoned or in which the proceedings were terminated and which application is referenced by either a published application, an application open to public inspections or an issued patent.

9. A record from this system of records may be disclosed, as a routine use, to a Federal, State, or local law enforcement agency, if the USPTO becomes aware of a violation or potential violation of law or regulation.

UNITED STATES PATENT AND TRADEMARK OFFICE

Commissioner for Patents
United States Patent and Trademark Office
P.O. Box 1450
Alexandria, VA 22313-1450
www.uspto.gov

In re Patent No. 5176663
Issue Date: January 5,1993
Application No. 07759139
Filed: September 11,1991
Attorney Docket No. 91878/290057

:
:DECISION GRANTING PETITION
:UNDER 37 CFR 1.378(c)
:

This is a decision on the electronic petition, filed January 4,2007 ,under 37 CFR 1.378(c) to accept the unintentionally delayed payment of the 11.5 year maintenance fee for the above-identified patent.

The petition is GRANTED.

The maintenance fee is accepted, and the above-identified patent reinstated as of January 4,2007 . This decision also constitutes notice that the fee has been accepted. An electronic copy of the petition and this decision has been created as an entry in an Image File Wrapper. Nevertheless, petitioner should print and retain an independent copy

Telephone inquires related to this electronic decision should be directed to the Electronic Business Center at 1-866-217-9197.

UNITED STATES PATENT AND TRADEMARK OFFICE

Commissioner for Patents
United States Patent and Trademark Office
P.O. Box 1450
Alexandria, VA 22313-1450
www.uspto.gov

FEB 24 2004

#42

TIMOTHY B. McBRIDE
SENNINGER, POWERS, LEAVITT & ROEDEL
ONE METROPOLITAN SQUARE, 16TH FLOOR
ST. LOUIS, MO 63102

In re Application of	:
Gregory A. Thompson et al	:
Serial No.: 07/762,762	: PETITION DECISION
Filed: September 16, 1991	:
Attorney Docket No.: MTC6824.1	:

This is in response to the petition under 37 CFR 1.181, filed October 31, 2002, requesting withdrawal of abandonment based on timely filing of a reply. The delay in acting on this petition is regretted. The petition was not forwarded properly for decision. The error is regretted.

A review of the file history shows that the examiner mailed a Notice of Allowance and Issue Fee Due and a Notice of Allowability to applicants on August 2, 1999, setting a three month statutory period for payment of the Issue Fee and a three month shortened statutory period for submission of new drawings. Upon failure to receive the drawings the application was held abandoned by Notice of Abandonment mailed February 15, 2000. Applicants state that the Issue Fee and drawings were submitted on October 5, 1999. The petition notes that the Notice of Allowance and Issue Fee Due and the Notice of Abandonment were misaddressed and had to be forwarded to the attorney of record for action. This delayed the filing of the petition to withdraw the holding of abandonment, although the Issue Fee and drawings were timely filed. The petition also notes a telephone interview with John LeGuyader who indicated that the formal drawings submitted October 5, 1999, which had been lost, had been located and placed in the file. Subsequent to the submission of the petition by Barbara Rae Venter applicants submitted a new power of attorney to the above identified firm.

It is also noted that the Issue Fee transmittal form provided a Deposit Account Number for purposes of charging the Issue Fee, but that a note attached to the form indicates that there were at that time (October 28, 1999) insufficient funds in the Deposit Account to pay the fee due. The Issue Fee was later paid on December 6, 1999, by check. In view of the evidence presented and of record in the file, the Notice of Abandonment is withdrawn and the application restored to pending status with the mailing of this decision.

The petition is **GRANTED**.

The application will be forwarded to Publications Division for printing as a patent.

Should there be any questions about this decision please contact William R. Dixon, Jr., by letter addressed to Director, TC 1600, at the address listed above, or by telephone at 571-272-0519 or by facsimile sent to the general Office facsimile number.

John Doll
Director, Technology Center 1600

Under the Paperwork Reduction Act of 1995, no persons are required to respond to a collection of information unless it displays valid OMB control number.

PETITION TO ACCEPT UNINTENTIONALLY DELAYED PAYMENT OF MAINTENANCE FEE IN AN EXPIRED PATENT (37 CFR 1.378(c))

Patent Number	Issue Date (YYYY-MM-DD)	Application Number	Filing Date (YYYY-MM-DD)	Docket Number (if applicable)
5261225	1993-11-16	07763000	1991-09-20	121321

CAUTION: Maintenance fee (and surcharge, if any) payment must correctly identify: (1) the patent number and (2) the application number of the actual U.S. application leading to issuance of that patent to ensure the fee(s) is/are associated with the correct patent. 37 CFR 1.366(c) and (d).

SMALL ENTITY
☒ Patentee claims, or has previously claimed, small entity status. See 37 CFR 1.27.

LOSS OF ENTITLEMENT TO SMALL ENTITY STATUS
☐ Patentee is no longer entitled to small entity status. See 37 CFR 1.27(g)

NOT Small Entity			Small Entity		
	Fee	Code		Fee	Code
○	3 ½ year	(1551)	○	3 ½ year	(2551)
○	7 ½ year	(1552)	○	7 ½ year	(2552)
○	11 ½ year	(1553)	◉	11 ½ year	(2553)

SURCHARGE
The surcharge required by 37 CFR 1.20(i)(2) (Fee Code 1558) must be paid as a condition of accepting unintentionally delayed payment of the maintenance fee.

MAINTENANCE FEE (37 CFR 1.20(e)-(g))
The appropriate maintenance fee must be submitted with this petition.

STATEMENT
THE UNDERSIGNED CERTIFIES THAT THE DELAY IN PAYMENT OF THE MAINTENANCE FEE TO THIS PATENT WAS UNINTENTIONAL

PETITIONER(S) REQUEST THAT THE DELAYED PAYMENT OF THE MAINTENANCE FEE BE ACCEPTED AND THE PATENT REINSTATED

THIS PORTION MUST BE COMPLETED BY THE SIGNATORY OR SIGNATORIES

37 CFR 1.378(d) states: "Any petition under this section must be signed by an attorney or agent registered to practice before the Patent and Trademark Office, or by the patentee, the assignee, or other party in interest."

I certify, in accordance with 37 CFR 1.4(d)(4) that I am

○ An attorney or agent registered to practice before the Patent and Trademark Office

○ A sole patentee

○ A joint patentee; I certify that I am authorized to sign this submission on behalf of all the other patentees.

○ A joint patentee; all of whom are signing this e-petition

◉ The assignee of record of the entire interest

The Assignee of record of the entire interest			
Under 37 CFR 3.71 an assignee becomes of record by filing a statement in compliance with 37 CFR 3.73(b). Signature requirements are set forth in 37 CFR 1.4(d), and the undersigned certifies that he / she is empowered to act on behalf of the assignee of the entire interest			
Signature	/Kevin Bolin/	Date (YYYY-MM-DD)	2007-07-02
Name	Kevin Bolin		
Enter Reel and Frame Number		Remove	
Reel Number	006950	Frame Number	0466
Enter Reel and Frame Number		Remove	
Reel Number	006950	Frame Number	0467
Click ADD for additional Reel Number and Frame Number		Add	

This collection of information is required by 37 CFR 1.378(c). The information is required to obtain or retain a benefit by the public which is to file (and by the USPTO to process) an application. Confidentiality is governed by 35 U.S.C. 122 and 37 CFR 1.11 and 1.14. This collection is estimated to take 1 hour to complete, including gathering, preparing, and submitting the completed application form to the USPTO. Time will vary depending upon the individual case. Any comments on the amount of time you require to complete this form and/ or suggestions for reducing this burden, should be sent to the Chief Information Officer, U.S. Patent and Trademark Office, U.S. Department of Commerce, P.O. Box 1450, Alexandria, VA 22313-1450. DO NOT SEND FEES OR COMPLETED FORMS TO THIS ADDRESS. **This form can only be used when in conjunction with EFS-Web. If this form is mailed to the USPTO, it may cause delays in reinstating the patent.**

Privacy Act Statement

The Privacy Act of 1974 (P.L. 93-579) requires that you be given certain information in connection with your submission of the attached form related to a patent application or patent. Accordingly, pursuant to the requirements of the Act, please be advised that: (1) the general authority for the collection of this information is 35 U.S.C. 2(b)(2); (2) furnishing of the information solicited is voluntary; and (3) the principal purpose for which the information is used by the U.S. Patent and Trademark Office is to process and/or examine your submission related to a patent application or patent. If you do not furnish the requested information, the U.S. Patent and Trademark Office may not be able to process and/or examine your submission, which may result in termination of proceedings or abandonment of the application or expiration of the patent.

The information provided by you in this form will be subject to the following routine uses:

1. The information on this form will be treated confidentially to the extent allowed under the Freedom of Information Act (5 U.S.C. 552) and the Privacy Act (5 U.S.C. 552a). Records from this system of records may be disclosed to the Department of Justice to determine whether the Freedom of Information Act requires disclosure of these record s.

2. A record from this system of records may be disclosed, as a routine use, in the course of presenting evidence to a court, magistrate, or administrative tribunal, including disclosures to opposing counsel in the course of settlement negotiations.

3. A record in this system of records may be disclosed, as a routine use, to a Member of Congress submitting a request involving an individual, to whom the record pertains, when the individual has requested assistance from the Member with respect to the subject matter of the record.

4. A record in this system of records may be disclosed, as a routine use, to a contractor of the Agency having need for the information in order to perform a contract. Recipients of information shall be required to comply with the requirements of the Privacy Act of 1974, as amended, pursuant to 5 U.S.C. 552a(m).

5. A record related to an International Application filed under the Patent Cooperation Treaty in this system of records may be disclosed, as a routine use, to the International Bureau of the World Intellectual Property Organization, pursuant to the Patent Cooperation Treaty.

6. A record in this system of records may be disclosed, as a routine use, to another federal agency for purposes of National Security review (35 U.S.C. 181) and for review pursuant to the Atomic Energy Act (42 U.S.C. 218(c)).

7. A record from this system of records may be disclosed, as a routine use, to the Administrator, General Services, or his/her designee, during an inspection of records conducted by GSA as part of that agency's responsibility to recommend improvements in records management practices and programs, under authority of 44 U.S.C. 2904 and 2906. Such disclosure shall be made in accordance with the GSA regulations governing inspection of records for this purpose, and any other relevant (i.e., GSA or Commerce) directive. Such disclosure shall not be used to make determinations about individuals.

8. A record from this system of records may be disclosed, as a routine use, to the public after either publication of the application pursuant to 35 U.S.C. 122(b) or issuance of a patent pursuant to 35 U.S.C. 151. Further, a record may be disclosed, subject to the limitations of 37 CFR 1.14, as a routine use, to the public if the record was filed in an application which became abandoned or in which the proceedings were terminated and which application is referenced by either a published application, an application open to public inspections or an issued patent.

9. A record from this system of records may be disclosed, as a routine use, to a Federal, State, or local law enforcement agency, if the USPTO becomes aware of a violation or potential violation of law or regulation.

UNITED STATES PATENT AND TRADEMARK OFFICE

Commissioner for Patents
United States Patent and Trademark Office
P.O. Box 1450
Alexandria, VA 22313-1450
www.uspto.gov

In re Patent No. 5261225
Issue Date: November 16,1993
Application No. 07763000
Filed: September 20,1991
Attorney Docket No. 121321

:
:DECISION GRANTING PETITION
:UNDER 37 CFR 1.378(c)
:

This is a decision on the electronic petition, filed July 2,2007 ,under 37 CFR 1.378(c) to accept the unintentionally delayed payment of the 11.5 year maintenance fee for the above-identified patent.

The petition is GRANTED.

The maintenance fee is accepted, and the above-identified patent reinstated as of July 2,2007 . This decision also constitutes notice that the fee has been accepted. An electronic copy of the petition and this decision has been created as an entry in an Image File Wrapper. Nevertheless, petitioner should print and retain an independent copy

Telephone inquires related to this electronic decision should be directed to the Electronic Business Center at 1-866-217-9197.

Under the Paperwork Reduction Act of 1995, no persons are required to respond to a collection of information unless it displays valid OMB control number.

PETITION TO ACCEPT UNINTENTIONALLY DELAYED PAYMENT OF MAINTENANCE FEE IN AN EXPIRED PATENT (37 CFR 1.378(c))

Patent Number	Issue Date (YYYY-MM-DD)	Application Number	Filing Date (YYYY-MM-DD)	Docket Number (if applicable)
5,325,044	1994-06-28	07/765,145	1991-09-24	091470-0203

CAUTION: Maintenance fee (and surcharge, if any) payment must correctly identify: (1) the patent number and (2) the application number of the actual U.S. application leading to issuance of that patent to ensure the fee(s) is/are associated with the correct patent. 37 CFR 1.366(c) and (d).

SMALL ENTITY
☒ Patentee claims, or has previously claimed, small entity status. See 37 CFR 1.27.

LOSS OF ENTITLEMENT TO SMALL ENTITY STATUS
☐ Patentee is no longer entitled to small entity status. See 37 CFR 1.27(g)

NOT Small Entity		Small Entity	
Fee	Code	Fee	Code
○ 3 ½ year	(1551)	○ 3 ½ year	(2551)
○ 7 ½ year	(1552)	○ 7 ½ year	(2552)
○ 11 ½ year	(1553)	◉ 11 ½ year	(2553)

SURCHARGE
The surcharge required by 37 CFR 1.20(i)(2) (Fee Code 1558) must be paid as a condition of accepting unintentionally delayed payment of the maintenance fee.

MAINTENANCE FEE (37 CFR 1.20(e)-(g))
The appropriate maintenance fee must be submitted with this petition.

STATEMENT
THE UNDERSIGNED CERTIFIES THAT THE DELAY IN PAYMENT OF THE MAINTENANCE FEE TO THIS PATENT WAS UNINTENTIONAL

PETITIONER(S) REQUEST THAT THE DELAYED PAYMENT OF THE MAINTENANCE FEE BE ACCEPTED AND THE PATENT REINSTATED

THIS PORTION MUST BE COMPLETED BY THE SIGNATORY OR SIGNATORIES

37 CFR 1.378(d) states: "Any petition under this section must be signed by an attorney or agent registered to practice before the Patent and Trademark Office, or by the patentee, the assignee, or other party in interest."

I certify, in accordance with 37 CFR 1.4(d)(4) that I am

○ An attorney or agent registered to practice before the Patent and Trademark Office

○ A sole patentee

◉ A joint patentee; I certify that I am authorized to sign this submission on behalf of all the other patentees.

○ A joint patentee; all of whom are signing this e-petition

○ The assignee of record of the entire interest

Under the Paperwork Reduction Act of 1995, no persons are required to respond to a collection of information unless it displays valid OMB control number.

A Joint Patentee and I certify that I am authorized to sign this submission on behalf of all the other patentees			
A signature of the applicant or representative is required in accordance with 37 CFR 1.33 and 10.18. Please see 37 CFR 1.4(d) for the form of the signature.			
Signature	//Luis E. Bartol//	Date (YYYY-MM-DD)	2008-01-08
Name	Luis E. Bartol		

This collection of information is required by 37 CFR 1.378(c). The information is required to obtain or retain a benefit by the public which is to file (and by the USPTO to process) an application. Confidentiality is governed by 35 U.S.C. 122 and 37 CFR 1.11 and 1.14. This collection is estimated to take 1 hour to complete, including gathering, preparing, and submitting the completed application form to the USPTO. Time will vary depending upon the individual case. Any comments on the amount of time you require to complete this form and/or suggestions for reducing this burden, should be sent to the Chief Information Officer, U.S. Patent and Trademark Office, U.S. Department of Commerce, P.O. Box 1450, Alexandria, VA 22313-1450. DO NOT SEND FEES OR COMPLETED FORMS TO THIS ADDRESS. **This form can only be used when in conjunction with EFS-Web. If this form is mailed to the USPTO, it may cause delays in reinstating the patent.**

Privacy Act Statement

The Privacy Act of 1974 (P.L. 93-579) requires that you be given certain information in connection with your submission of the attached form related to a patent application or patent. Accordingly, pursuant to the requirements of the Act, please be advised that: (1) the general authority for the collection of this information is 35 U.S.C. 2(b)(2); (2) furnishing of the information solicited is voluntary; and (3) the principal purpose for which the information is used by the U.S. Patent and Trademark Office is to process and/or examine your submission related to a patent application or patent. If you do not furnish the requested information, the U.S. Patent and Trademark Office may not be able to process and/or examine your submission, which may result in termination of proceedings or abandonment of the application or expiration of the patent.

The information provided by you in this form will be subject to the following routine uses:

1. The information on this form will be treated confidentially to the extent allowed under the Freedom of Information Act (5 U.S.C. 552) and the Privacy Act (5 U.S.C. 552a). Records from this system of records may be disclosed to the Department of Justice to determine whether the Freedom of Information Act requires disclosure of these record s.

2. A record from this system of records may be disclosed, as a routine use, in the course of presenting evidence to a court, magistrate, or administrative tribunal, including disclosures to opposing counsel in the course of settlement negotiations.

3. A record in this system of records may be disclosed, as a routine use, to a Member of Congress submitting a request involving an individual, to whom the record pertains, when the individual has requested assistance from the Member with respect to the subject matter of the record.

4. A record in this system of records may be disclosed, as a routine use, to a contractor of the Agency having need for the information in order to perform a contract. Recipients of information shall be required to comply with the requirements of the Privacy Act of 1974, as amended, pursuant to 5 U.S.C. 552a(m).

5. A record related to an International Application filed under the Patent Cooperation Treaty in this system of records may be disclosed, as a routine use, to the International Bureau of the World Intellectual Property Organization, pursuant to the Patent Cooperation Treaty.

6. A record in this system of records may be disclosed, as a routine use, to another federal agency for purposes of National Security review (35 U.S.C. 181) and for review pursuant to the Atomic Energy Act (42 U.S.C. 218(c)).

7. A record from this system of records may be disclosed, as a routine use, to the Administrator, General Services, or his/her designee, during an inspection of records conducted by GSA as part of that agency's responsibility to recommend improvements in records management practices and programs, under authority of 44 U.S.C. 2904 and 2906. Such disclosure shall be made in accordance with the GSA regulations governing inspection of records for this purpose, and any other relevant (i.e., GSA or Commerce) directive. Such disclosure shall not be used to make determinations about individuals.

8. A record from this system of records may be disclosed, as a routine use, to the public after either publication of the application pursuant to 35 U.S.C. 122(b) or issuance of a patent pursuant to 35 U.S.C. 151. Further, a record may be disclosed, subject to the limitations of 37 CFR 1.14, as a routine use, to the public if the record was filed in an application which became abandoned or in which the proceedings were terminated and which application is referenced by either a published application, an application open to public inspections or an issued patent.

9. A record from this system of records may be disclosed, as a routine use, to a Federal, State, or local law enforcement agency, if the USPTO becomes aware of a violation or potential violation of law or regulation.

UNITED STATES PATENT AND TRADEMARK OFFICE

Commissioner for Patents
United States Patent and Trademark Office
P.O. Box 1450
Alexandria, VA 22313-1450
www.uspto.gov

In re Patent No. 5325044
Issue Date: June 28,1994
Application No. 07765145
Filed: September 24,1991
Attorney Docket No. BAR-0001P

:

:DECISION GRANTING PETITION
:UNDER 37 CFR 1.378(c)

:

This is a decision on the electronic petition, filed January 8,2008 ,under 37 CFR 1.378(c) to accept the unintentionally delayed payment of the 11.5 year maintenance fee for the above-identified patent.

The petition is GRANTED.

The maintenance fee is accepted, and the above-identified patent reinstated as of January 8,2008 . This decision also constitutes notice that the fee has been accepted. An electronic copy of the petition and this decision has been created as an entry in an Image File Wrapper. Nevertheless, petitioner should print and retain an independent copy

Telephone inquires related to this electronic decision should be directed to the Electronic Business Center at 1-866-217-9197.

Under the Paperwork Reduction Act of 1995, no persons are required to respond to a collection of information unless it displays valid OMB control number.

PETITION TO ACCEPT UNINTENTIONALLY DELAYED PAYMENT OF MAINTENANCE FEE IN AN EXPIRED PATENT (37 CFR 1.378(c))

Patent Number	Issue Date (YYYY-MM-DD)	Application Number	Filing Date (YYYY-MM-DD)	Docket Number (if applicable)
5648789	1997-07-15	07769849	1991-10-02	SLM-74638

CAUTION: Maintenance fee (and surcharge, if any) payment must correctly identify: (1) the patent number and (2) the application number of the actual U.S. application leading to issuance of that patent to ensure the fee(s) is/are associated with the correct patent. 37 CFR 1.366(c) and (d).

SMALL ENTITY
☒ Patentee claims, or has previously claimed, small entity status. See 37 CFR 1.27.

LOSS OF ENTITLEMENT TO SMALL ENTITY STATUS
☐ Patentee is no longer entitled to small entity status. See 37 CFR 1.27(g)

NOT Small Entity		Small Entity	
Fee	Code	Fee	Code
○ 3 ½ year	(1551)	○ 3 ½ year	(2551)
○ 7 ½ year	(1552)	◉ 7 ½ year	(2552)
○ 11 ½ year	(1553)	○ 11 ½ year	(2553)

SURCHARGE
The surcharge required by 37 CFR 1.20(i)(2) (Fee Code 1558) must be paid as a condition of accepting unintentionally delayed payment of the maintenance fee.

MAINTENANCE FEE (37 CFR 1.20(e)-(g))
The appropriate maintenance fee must be submitted with this petition.

STATEMENT
THE UNDERSIGNED CERTIFIES THAT THE DELAY IN PAYMENT OF THE MAINTENANCE FEE TO THIS PATENT WAS UNINTENTIONAL

PETITIONER(S) REQUEST THAT THE DELAYED PAYMENT OF THE MAINTENANCE FEE BE ACCEPTED AND THE PATENT REINSTATED

THIS PORTION MUST BE COMPLETED BY THE SIGNATORY OR SIGNATORIES

37 CFR 1.378(d) states: "Any petition under this section must be signed by an attorney or agent registered to practice before the Patent and Trademark Office, or by the patentee, the assignee, or other party in interest."

I certify, in accordance with 37 CFR 1.4(d)(4) that I am

◉ An attorney or agent registered to practice before the Patent and Trademark Office

○ A sole patentee

○ A joint patentee; I certify that I am authorized to sign this submission on behalf of all the other patentees.

○ A joint patentee; all of whom are signing this e-petition

○ The assignee of record of the entire interest

Patent Practitioner			
A signature of the applicant or representative is required in accordance with 37 CFR 1.33 and 10.18. Please see 37 CFR 1.4(d) for the form of the signature			
Signature	/John K. Fitzgerald/	Date (YYYY-MM-DD)	2006-12-28
Name	JOHN K. FITZGERALD	Registration Number	38881

This collection of information is required by 37 CFR 1.378(c). The information is required to obtain or retain a benefit by the public which is to file (and by the USPTO to process) an application. Confidentiality is governed by 35 U.S.C. 122 and 37 CFR 1.11 and 1.14. This collection is estimated to take 1 hour to complete, including gathering, preparing, and submitting the completed application form to the USPTO. Time will vary depending upon the individual case. Any comments on the amount of time you require to complete this form and/ or suggestions for reducing this burden, should be sent to the Chief Information Officer, U.S. Patent and Trademark Office, U.S. Department of Commerce, P.O. Box 1450, Alexandria, VA 22313-1450. DO NOT SEND FEES OR COMPLETED FORMS TO THIS ADDRESS. **This form can only be used when in conjunction with EFS-Web. If this form is mailed to the USPTO, it may cause delays in reinstating the patent.**

Privacy Act Statement

The Privacy Act of 1974 (P.L. 93-579) requires that you be given certain information in connection with your submission of the attached form related to a patent application or patent. Accordingly, pursuant to the requirements of the Act, please be advised that: (1) the general authority for the collection of this information is 35 U.S.C. 2(b)(2); (2) furnishing of the information solicited is voluntary; and (3) the principal purpose for which the information is used by the U.S. Patent and Trademark Office is to process and/or examine your submission related to a patent application or patent. If you do not furnish the requested information, the U.S. Patent and Trademark Office may not be able to process and/or examine your submission, which may result in termination of proceedings or abandonment of the application or expiration of the patent.

The information provided by you in this form will be subject to the following routine uses:

1. The information on this form will be treated confidentially to the extent allowed under the Freedom of Information Act (5 U.S.C. 552) and the Privacy Act (5 U.S.C. 552a). Records from this system of records may be disclosed to the Department of Justice to determine whether the Freedom of Information Act requires disclosure of these record s.

2. A record from this system of records may be disclosed, as a routine use, in the course of presenting evidence to a court, magistrate, or administrative tribunal, including disclosures to opposing counsel in the course of settlement negotiations.

3. A record in this system of records may be disclosed, as a routine use, to a Member of Congress submitting a request involving an individual, to whom the record pertains, when the individual has requested assistance from the Member with respect to the subject matter of the record.

4. A record in this system of records may be disclosed, as a routine use, to a contractor of the Agency having need for the information in order to perform a contract. Recipients of information shall be required to comply with the requirements of the Privacy Act of 1974, as amended, pursuant to 5 U.S.C. 552a(m).

5. A record related to an International Application filed under the Patent Cooperation Treaty in this system of records may be disclosed, as a routine use, to the International Bureau of the World Intellectual Property Organization, pursuant to the Patent Cooperation Treaty.

6. A record in this system of records may be disclosed, as a routine use, to another federal agency for purposes of National Security review (35 U.S.C. 181) and for review pursuant to the Atomic Energy Act (42 U.S.C. 218(c)).

7. A record from this system of records may be disclosed, as a routine use, to the Administrator, General Services, or his/her designee, during an inspection of records conducted by GSA as part of that agency's responsibility to recommend improvements in records management practices and programs, under authority of 44 U.S.C. 2904 and 2906. Such disclosure shall be made in accordance with the GSA regulations governing inspection of records for this purpose, and any other relevant (i.e., GSA or Commerce) directive. Such disclosure shall not be used to make determinations about individuals.

8. A record from this system of records may be disclosed, as a routine use, to the public after either publication of the application pursuant to 35 U.S.C. 122(b) or issuance of a patent pursuant to 35 U.S.C. 151. Further, a record may be disclosed, subject to the limitations of 37 CFR 1.14, as a routine use, to the public if the record was filed in an application which became abandoned or in which the proceedings were terminated and which application is referenced by either a published application, an application open to public inspections or an issued patent.

9. A record from this system of records may be disclosed, as a routine use, to a Federal, State, or local law enforcement agency, if the USPTO becomes aware of a violation or potential violation of law or regulation.

UNITED STATES PATENT AND TRADEMARK OFFICE

Commissioner for Patents
United States Patent and Trademark Office
P.O. Box 1450
Alexandria, VA 22313-1450
www.uspto.gov

In re Patent No. 5648789
Issue Date: July 15,1997
Application No. 07769849
Filed: October 2,1991
Attorney Docket No. 2779.035443

:
:DECISION GRANTING PETITION
:UNDER 37 CFR 1.378(c)
:

This is a decision on the electronic petition, filed December 28,2006 ,under 37 CFR 1.378(c) to accept the unintentionally delayed payment of the 7.5 year maintenance fee for the above-identified patent.

The petition is GRANTED.

The maintenance fee is accepted, and the above-identified patent reinstated as of December 28,2006. This decision also constitutes notice that the fee has been accepted. An electronic copy of the petition and this decision has been created as an entry in an Image File Wrapper. Nevertheless, petitioner should print and retain an independent copy

Telephone inquires related to this electronic decision should be directed to the Electronic Business Center at 1-866-217-9197.

Approved for use through 04/30/2009. OMB 0651-0016
U.S. Patent and Trademark Office: U.S. DEPARTMENT OF COMMERCE
Under the Paperwork Reduction Act of 1995, no persons are required to respond to a collection of information unless it displays valid OMB control number.

PETITION TO ACCEPT UNINTENTIONALLY DELAYED PAYMENT OF MAINTENANCE FEE IN AN EXPIRED PATENT (37 CFR 1.378(c))

Patent Number	Issue Date (YYYY-MM-DD)	Application Number	Filing Date (YYYY-MM-DD)	Docket Number (if applicable)
5598508	1997-01-28	07779219	1991-10-18	2262-2

CAUTION: Maintenance fee (and surcharge, if any) payment must correctly identify: (1) the patent number and (2) the application number of the actual U.S. application leading to issuance of that patent to ensure the fee(s) is/are associated with the correct patent. 37 CFR 1.366(c) and (d).

SMALL ENTITY
☒ Patentee claims, or has previously claimed, small entity status. See 37 CFR 1.27.

LOSS OF ENTITLEMENT TO SMALL ENTITY STATUS
☐ Patentee is no longer entitled to small entity status. See 37 CFR 1.27(g)

NOT Small Entity			Small Entity		
	Fee	Code		Fee	Code
○	3 ½ year	(1551)	○	3 ½ year	(2551)
○	7 ½ year	(1552)	○	7 ½ year	(2552)
○	11 ½ year	(1553)	◉	11 ½ year	(2553)

SURCHARGE
The surcharge required by 37 CFR 1.20(i)(2) (Fee Code 1558) must be paid as a condition of accepting unintentionally delayed payment of the maintenance fee.

MAINTENANCE FEE (37 CFR 1.20(e)-(g))
The appropriate maintenance fee must be submitted with this petition.

STATEMENT
THE UNDERSIGNED CERTIFIES THAT THE DELAY IN PAYMENT OF THE MAINTENANCE FEE TO THIS PATENT WAS UNINTENTIONAL

PETITIONER(S) REQUEST THAT THE DELAYED PAYMENT OF THE MAINTENANCE FEE BE ACCEPTED AND THE PATENT REINSTATED

THIS PORTION MUST BE COMPLETED BY THE SIGNATORY OR SIGNATORIES

37 CFR 1.378(d) states: "Any petition under this section must be signed by an attorney or agent registered to practice before the Patent and Trademark Office, or by the patentee, the assignee, or other party in interest."

I certify, in accordance with 37 CFR 1.4(d)(4) that I am

◉ An attorney or agent registered to practice before the Patent and Trademark Office

○ A sole patentee

○ A joint patentee; I certify that I am authorized to sign this submission on behalf of all the other patentees.

○ A joint patentee; all of whom are signing this e-petition

○ The assignee of record of the entire interest

Patent Practitioner			
A signature of the applicant or representative is required in accordance with 37 CFR 1.33 and 10.18. Please see 37 CFR 1.4(d) for the form of the signature			
Signature	/Lawrence A. Maxham/	Date (YYYY-MM-DD)	2009-02-13
Name	Lawrence A. Maxham	Registration Number	24483

This collection of information is required by 37 CFR 1.378(c). The information is required to obtain or retain a benefit by the public which is to file (and by the USPTO to process) an application. Confidentiality is governed by 35 U.S.C. 122 and 37 CFR 1.11 and 1.14. This collection is estimated to take 1 hour to complete, including gathering, preparing, and submitting the completed application form to the USPTO. Time will vary depending upon the individual case. Any comments on the amount of time you require to complete this form and/ or suggestions for reducing this burden, should be sent to the Chief Information Officer, U.S. Patent and Trademark Office, U.S. Department of Commerce, P.O. Box 1450, Alexandria, VA 22313-1450. DO NOT SEND FEES OR COMPLETED FORMS TO THIS ADDRESS. **This form can only be used when in conjunction with EFS-Web. If this form is mailed to the USPTO, it may cause delays in reinstating the patent.**

Privacy Act Statement

The Privacy Act of 1974 (P.L. 93-579) requires that you be given certain information in connection with your submission of the attached form related to a patent application or patent. Accordingly, pursuant to the requirements of the Act, please be advised that: (1) the general authority for the collection of this information is 35 U.S.C. 2(b)(2); (2) furnishing of the information solicited is voluntary; and (3) the principal purpose for which the information is used by the U.S. Patent and Trademark Office is to process and/or examine your submission related to a patent application or patent. If you do not furnish the requested information, the U.S. Patent and Trademark Office may not be able to process and/or examine your submission, which may result in termination of proceedings or abandonment of the application or expiration of the patent.

The information provided by you in this form will be subject to the following routine uses:

1. The information on this form will be treated confidentially to the extent allowed under the Freedom of Information Act (5 U.S.C. 552) and the Privacy Act (5 U.S.C. 552a). Records from this system of records may be disclosed to the Department of Justice to determine whether the Freedom of Information Act requires disclosure of these record s.

2. A record from this system of records may be disclosed, as a routine use, in the course of presenting evidence to a court, magistrate, or administrative tribunal, including disclosures to opposing counsel in the course of settlement negotiations.

3. A record in this system of records may be disclosed, as a routine use, to a Member of Congress submitting a request involving an individual, to whom the record pertains, when the individual has requested assistance from the Member with respect to the subject matter of the record.

4. A record in this system of records may be disclosed, as a routine use, to a contractor of the Agency having need for the information in order to perform a contract. Recipients of information shall be required to comply with the requirements of the Privacy Act of 1974, as amended, pursuant to 5 U.S.C. 552a(m).

5. A record related to an International Application filed under the Patent Cooperation Treaty in this system of records may be disclosed, as a routine use, to the International Bureau of the World Intellectual Property Organization, pursuant to the Patent Cooperation Treaty.

6. A record in this system of records may be disclosed, as a routine use, to another federal agency for purposes of National Security review (35 U.S.C. 181) and for review pursuant to the Atomic Energy Act (42 U.S.C. 218(c)).

7. A record from this system of records may be disclosed, as a routine use, to the Administrator, General Services, or his/her designee, during an inspection of records conducted by GSA as part of that agency's responsibility to recommend improvements in records management practices and programs, under authority of 44 U.S.C. 2904 and 2906. Such disclosure shall be made in accordance with the GSA regulations governing inspection of records for this purpose, and any other relevant (i.e., GSA or Commerce) directive. Such disclosure shall not be used to make determinations about individuals.

8. A record from this system of records may be disclosed, as a routine use, to the public after either publication of the application pursuant to 35 U.S.C. 122(b) or issuance of a patent pursuant to 35 U.S.C. 151. Further, a record may be disclosed, subject to the limitations of 37 CFR 1.14, as a routine use, to the public if the record was filed in an application which became abandoned or in which the proceedings were terminated and which application is referenced by either a published application, an application open to public inspections or an issued patent.

9. A record from this system of records may be disclosed, as a routine use, to a Federal, State, or local law enforcement agency, if the USPTO becomes aware of a violation or potential violation of law or regulation.

UNITED STATES PATENT AND TRADEMARK OFFICE

Commissioner for Patents
United States Patent and Trademark Office
P.O. Box 1450
Alexandria, VA 22313-1450
www.uspto.gov

In re Patent No. 5598508
Issue Date: January 28,1997
Application No. 07779219
Filed: October 18,1991
Attorney Docket No. 3387-00001

:
:DECISION GRANTING PETITION
:UNDER 37 CFR 1.378(c)
:

This is a decision on the electronic petition, filed February 13,2009 ,under 37 CFR 1.378(c) to accept the unintentionally delayed payment of the 11.5 year maintenance fee for the above-identified patent.

The petition is **GRANTED**.

The maintenance fee is accepted, and the above-identified patent reinstated as of February 13,2009 . This decision also constitutes notice that the fee has been accepted. An electronic copy of the petition and this decision has been created as an entry in the Image File Wrapper. Nevertheless, petitioner should print and retain an independent copy.

Telephone inquiries related to this electronic decision should be directed to the Electronic Business Center at 1-866-217-9197.

Under the Paperwork Reduction Act of 1995, no persons are required to respond to a collection of information unless it displays valid OMB control number.

PETITION TO ACCEPT UNINTENTIONALLY DELAYED PAYMENT OF MAINTENANCE FEE IN AN EXPIRED PATENT (37 CFR 1.378(c))

Patent Number	Issue Date (YYYY-MM-DD)	Application Number	Filing Date (YYYY-MM-DD)	Docket Number (if applicable)
5332666	1994-07-26	07780347	1991-10-22	NEN-11205/16

CAUTION: Maintenance fee (and surcharge, if any) payment must correctly identify: (1) the patent number and (2) the application number of the actual U.S. application leading to issuance of that patent to ensure the fee(s) is/are associated with the correct patent. 37 CFR 1.366(c) and (d).

SMALL ENTITY
☐ Patentee claims, or has previously claimed, small entity status. See 37 CFR 1.27.

LOSS OF ENTITLEMENT TO SMALL ENTITY STATUS
☐ Patentee is no longer entitled to small entity status. See 37 CFR 1.27(g)

NOT Small Entity			Small Entity		
	Fee	Code		Fee	Code
○	3 ½ year	(1551)	○	3 ½ year	(2551)
○	7 ½ year	(1552)	○	7 ½ year	(2552)
◉	11 ½ year	(1553)	○	11 ½ year	(2553)

SURCHARGE
The surcharge required by 37 CFR 1.20(i)(2) (Fee Code 1558) must be paid as a condition of accepting unintentionally delayed payment of the maintenance fee.

MAINTENANCE FEE (37 CFR 1.20(e)-(g))
The appropriate maintenance fee must be submitted with this petition.

STATEMENT
THE UNDERSIGNED CERTIFIES THAT THE DELAY IN PAYMENT OF THE MAINTENANCE FEE TO THIS PATENT WAS UNINTENTIONAL

PETITIONER(S) REQUEST THAT THE DELAYED PAYMENT OF THE MAINTENANCE FEE BE ACCEPTED AND THE PATENT REINSTATED

THIS PORTION MUST BE COMPLETED BY THE SIGNATORY OR SIGNATORIES

37 CFR 1.378(d) states: "Any petition under this section must be signed by an attorney or agent registered to practice before the Patent and Trademark Office, or by the patentee, the assignee, or other party in interest."

I certify, in accordance with 37 CFR 1.4(d)(4) that I am

◉ An attorney or agent registered to practice before the Patent and Trademark Office

○ A sole patentee

○ A joint patentee; I certify that I am authorized to sign this submission on behalf of all the other patentees.

○ A joint patentee; all of whom are signing this e-petition

○ The assignee of record of the entire interest

Patent Practitioner			
A signature of the applicant or representative is required in accordance with 37 CFR 1.33 and 10.18. Please see 37 CFR 1.4(d) for the form of the signature			
Signature	/Avery N. Goldstein/	Date (YYYY-MM-DD)	2007-07-31
Name	Avery N. Goldstein	Registration Number	39204

This collection of information is required by 37 CFR 1.378(c). The information is required to obtain or retain a benefit by the public which is to file (and by the USPTO to process) an application. Confidentiality is governed by 35 U.S.C. 122 and 37 CFR 1.11 and 1.14. This collection is estimated to take 1 hour to complete, including gathering, preparing, and submitting the completed application form to the USPTO. Time will vary depending upon the individual case. Any comments on the amount of time you require to complete this form and/ or suggestions for reducing this burden, should be sent to the Chief Information Officer, U.S. Patent and Trademark Office, U.S. Department of Commerce, P.O. Box 1450, Alexandria, VA 22313-1450. DO NOT SEND FEES OR COMPLETED FORMS TO THIS ADDRESS. **This form can only be used when in conjunction with EFS-Web. If this form is mailed to the USPTO, it may cause delays in reinstating the patent.**

Privacy Act Statement

The Privacy Act of 1974 (P.L. 93-579) requires that you be given certain information in connection with your submission of the attached form related to a patent application or patent. Accordingly, pursuant to the requirements of the Act, please be advised that: (1) the general authority for the collection of this information is 35 U.S.C. 2(b)(2); (2) furnishing of the information solicited is voluntary; and (3) the principal purpose for which the information is used by the U.S. Patent and Trademark Office is to process and/or examine your submission related to a patent application or patent. If you do not furnish the requested information, the U.S. Patent and Trademark Office may not be able to process and/or examine your submission, which may result in termination of proceedings or abandonment of the application or expiration of the patent.

The information provided by you in this form will be subject to the following routine uses:

1. The information on this form will be treated confidentially to the extent allowed under the Freedom of Information Act (5 U.S.C. 552) and the Privacy Act (5 U.S.C. 552a). Records from this system of records may be disclosed to the Department of Justice to determine whether the Freedom of Information Act requires disclosure of these record s.

2. A record from this system of records may be disclosed, as a routine use, in the course of presenting evidence to a court, magistrate, or administrative tribunal, including disclosures to opposing counsel in the course of settlement negotiations.

3. A record in this system of records may be disclosed, as a routine use, to a Member of Congress submitting a request involving an individual, to whom the record pertains, when the individual has requested assistance from the Member with respect to the subject matter of the record.

4. A record in this system of records may be disclosed, as a routine use, to a contractor of the Agency having need for the information in order to perform a contract. Recipients of information shall be required to comply with the requirements of the Privacy Act of 1974, as amended, pursuant to 5 U.S.C. 552a(m).

5. A record related to an International Application filed under the Patent Cooperation Treaty in this system of records may be disclosed, as a routine use, to the International Bureau of the World Intellectual Property Organization, pursuant to the Patent Cooperation Treaty.

6. A record in this system of records may be disclosed, as a routine use, to another federal agency for purposes of National Security review (35 U.S.C. 181) and for review pursuant to the Atomic Energy Act (42 U.S.C. 218(c)).

7. A record from this system of records may be disclosed, as a routine use, to the Administrator, General Services, or his/her designee, during an inspection of records conducted by GSA as part of that agency's responsibility to recommend improvements in records management practices and programs, under authority of 44 U.S.C. 2904 and 2906. Such disclosure shall be made in accordance with the GSA regulations governing inspection of records for this purpose, and any other relevant (i.e., GSA or Commerce) directive. Such disclosure shall not be used to make determinations about individuals.

8. A record from this system of records may be disclosed, as a routine use, to the public after either publication of the application pursuant to 35 U.S.C. 122(b) or issuance of a patent pursuant to 35 U.S.C. 151. Further, a record may be disclosed, subject to the limitations of 37 CFR 1.14, as a routine use, to the public if the record was filed in an application which became abandoned or in which the proceedings were terminated and which application is referenced by either a published application, an application open to public inspections or an issued patent.

9. A record from this system of records may be disclosed, as a routine use, to a Federal, State, or local law enforcement agency, if the USPTO becomes aware of a violation or potential violation of law or regulation.

UNITED STATES PATENT AND TRADEMARK OFFICE

Commissioner for Patents
United States Patent and Trademark Office
P.O. Box 1450
Alexandria, VA 22313-1450
www.uspto.gov

In re Patent No. 5332666
Issue Date: July 26,1994
Application No. 07780347
Filed: October 22,1991
Attorney Docket No. IP-0597-E

:
:DECISION GRANTING PETITION
:UNDER 37 CFR 1.378(c)
:

This is a decision on the electronic petition, filed July 31,2007 ,under 37 CFR 1.378(c) to accept the unintentionally delayed payment of the 11.5 year maintenance fee for the above-identified patent.

The petition is GRANTED.

The maintenance fee is accepted, and the above-identified patent reinstated as of July 31,2007 . This decision also constitutes notice that the fee has been accepted. An electronic copy of the petition and this decision has been created as an entry in an Image File Wrapper. Nevertheless, petitioner should print and retain an independent copy

Telephone inquires related to this electronic decision should be directed to the Electronic Business Center at 1-866-217-9197.

SPE RESPONSE FOR CERTIFICATE OF CORRECTION

Paper No.: _____

DATE : 9/26/04

TO SPE OF : ART UNIT 2812

SUBJECT : Request for Certificate of Correction on Patent No.: 5342806

A response is requested with respect to the accompanying request for a certificate of correction.

Please complete this form and return with file, within **7** days to:
Palm location **7580, Certificates of Correction Branch – South Tower – 9A22**
If response is for an IFW, **return to employee (named below) via PUBSCofC Team in MADRAS.**
With respect to the change(s) requested, correcting Office and/or Applicant's errors, should the patent read as shown in the certificate of correction (COCIN)? No new matter should be introduced, nor should the scope or meaning of the claims be changed.

Lamonte M. Newsome

Thank You For Your Assistance

Certificates of Correction Branch
Tel. No. 703-305-8309

The request for issuing the above-identified correction(s) is hereby:
Note your decision on the appropriate box.

- ☒ **Approved** — **All** changes apply.
- ☐ **Approved in Part** — Specify below which changes **do not** apply.
- ☐ **Denied** — State the reasons for denial below.

Comments:

_____

_____

_____

_____

_____

Michael Lebentritt — **SPE**

2812 — **Art Unit**

UNITED STATES PATENT AND TRADEMARK OFFICE

Commissioner for Patents
United States Patent and Trademark Office
P.O. Box 1450
Alexandria, VA 22313-1450
www.uspto.gov

COPY MAILED

MAR 09 2006

OFFICE OF PETITIONS

OLE K. NILSSEN
200 N. HARRISON ST, SUITE 103
ALGONQUIN IL 60102

In re Patent No. 5,159,245 :
Issue Date: October 27, 1992 :
Application No. 07/789,800 : ON PETITION
Filed: November 12, 1991 :
Title of Invention: **TRACK LIGHTING SYSTEM FOR 277 VOLT POWER LINE** :

This is a decision regarding your request for acceptance of a fee deficiency submission under 37 CFR 1.28 filed January 27, 2006.

On September 1, 1998, the Court of Appeals for the Federal Circuit held that 37 CFR 1.28(c) is the sole provision governing the time for correction of the erroneous payment of the issue fee as a small entity. See DH Technology v. Synergystex International, Inc.. 154 F.33d 1333, 47 USPQ2d 1865 (Fed. Cir. Sept. 1, 1998).

The Office no longer investigates or rejects original or reissue applications under 37 CFR 1.56. 1098 Off. Gaz. Pat. Office 502 (January 3, 1989). Therefore nothing in this Notice is intended to imply that an investigation was done.

Your fee deficiency submission under 37 CFR 1.28 is hereby accepted and the petition is **GRANTED**.

Inquiries related to this communication should be directed to the Office of Petitions Staff at (571) 272-3282.

Patricia Faison-Ball

Patricia Faison-Ball
Senior Petitions Attorney
Office of Petitions

UNITED STATES PATENT AND TRADEMARK OFFICE

Commissioner for Patents
United States Patent and Trademark Office
P.O. Box 1450
Alexandria, VA 22313-1450
www.uspto.gov

STAAS & HALSEY LLP
SUITE 700
1201 NEW YORK AVENUE, N.W.
WASHINGTON, DC 20005

COPY MAILED

JAN 0 8 2007

OFFICE OF PETITIONS

In re Patent No.: 5,348,922 :
Issue Date: September 20,1994 :
Application No.: 07/793,372 : ON PETITION
Filed: July 14, 1992 :
Attorney Docket No. 442.1015/CMK

This is a decision on the petition under 37 CFR 1.183 to waive the requirements of 37 CFR 1.378(c), the petition under 37 CFR 1.378(c), and the petition under 37 CFR 1.378(b) to reinstate the above-cited patent all filed February 9, 2005.

The petition under 37 CFR 1.183 is **DISMISSED**.

The petition under 37 CFR 1.378(c) is **DISMISSED**.

The petition under 37 CFR 1.378(b) is **DISMISSED**.

If reconsideration of this decision is desired, a petition for reconsideration under 37 CFR 1.378(e) must be filed within TWO (2) MONTHS from the mail date of this decision. No extension of this two month time limit can be granted under 37 CFR 1.136(a) or (b). This is **not** a final agency action within the meaning of 5 U.S.C. § 704.

Any petition for reconsideration of this decision must be accompanied by the petition fee of $400.00 as set forth in 37 CFR 1.17(h). The petition for reconsideration must include the lacking item(s) noted above since, after a decision on the petition for reconsideration, no further reconsideration or review of the matter will be undertaken by the Commissioner.

The above-identified patent issued on September 20, 1994. Therefore, the grace period in 35 U.S.C. § 41(b) for paying the 7.5-year maintenance fee expired at midnight on September 20, 2002.

TREATMENT UNDER 37 CFR 1.183

Petitioner has requested waiver of the requirement that a petition to accept unintentionally delayed maintenance fee be filed within twenty-four months after the expiration of the patent. It is noted that that 37 CFR 1.183 allows for waiver or suspension of the rules when justice requires and the subject rule is not also set forth in the statutes. The requirement that a petition for unintentional delay be filed within twenty-four months after the expiration of the patent is set forth in the 35 U.S.C § 41, therefore; the Office does not have the authority to waive the requirement that a petition for unintentional delay be filed within twenty-four months after the expiration of the patent. The petition under 37 CFR 1.183 is dismissed, accordingly.

Deposit account 19-3935 will be charged $400.00 for the instant petition fee.

TREATMENT UNEDR 37 CFR 1.378(c)

Petitioner is advised that 37 CFR 1.378(c) provides, in pertinent part, that:

> Any petition to accept an unintentionally delayed payment of a maintenance fee filed under paragraph (a) of this section must be filed within twenty-four months after the six month grace period provided in § 1.362(e) . . .

It is noted the instant petition was filed more than twenty-four months after the expiration of the patent. The instant petition under 37 CFR 1.378(c) must be dismissed, accordingly.

TREATMENT UNDER 37 CFR 1.378(b)

The petition under 37 CFR 1.378(b) filed for the subject patent revealed that the petition was lacking in several respects. Any renewed petition under 37 CFR 1.378(b) should respond to and/or provide the following:

- Additional information regarding the system used to transfer the assignee's patents to Computer Packages Patent Annuities and why it is a reliable system.
- Explain the process used to convert assignee's data to Computer Packages Patent Annuities, more specifically what data integrity and error checks were used in the process.
- Explain, in detail, the tests conducted to verify the completeness and reliability of the data sent to Computer Packages Patent Annuities and provide statements from employees who were involved with the transfer process.
- Explain how the error occurred.
- Provide a statement from Victor Del Rio explaining how the docket error occurred.

Further correspondence with respect to this matter should be addressed as follows:

By mail: Commissioner for Patents
United States Patent and Trademark Office

Box 1450
Alexandria, VA 22313-1450

By facsimile: (571) 273-8300
Attn: Office of Petitions

Telephone inquiries concerning this matter may be directed to the undersigned at (571) 272-3222.

Kenya A. McLaughlin
Petitions Attorney
Office of Petitions

UNITED STATES PATENT AND TRADEMARK OFFICE

Commissioner for Patents
United States Patent and Trademark Office
P.O. Box 1450
Alexandria, VA 22313-1450
www.uspto.gov

COPY MAILED

AUG 0 2 2007

OFFICE OF PETITIONS

STAAS & HALSEY LLP
SUITE 700
1201 NEW YORK AVENUE, N.W.
WASHINGTON, DC 20005

In re Patent No. 5,348,922 :
Issue Date: September 20, 1994 : ON PETITION
Application No.: 07/793,372 :
Filed: July 14, 1992 :
Attorney Docket No.:442.1015/CMK :

This is a decision on the petition under 37 CFR 1.378(c), filed June 5, 2007.

The petition is **GRANTED**.

The patent issued September 20, 1994. The grace period for paying the 11.5-year maintenance fee expired at midnight September 20, 2006. Since the petition was filed within twenty-four months after the six-month grace period provided in 37 CFR 1.362(e), this petition was timely filed under the provisions of 37 CFR 1.378(c).

Accordingly, the maintenance fee for this patent of $1,900.00 and the surcharge for the unintentionally delayed maintenance fee payment of $1,640.00 are accepted. The above-identified patent is hereby reinstated.

Telephone inquiries concerning this matter may be directed to the undersigned at (571) 272-3222.

Kenya A. McLaughlin
Petitions Attorney
Office of Petitions

Under the Paperwork Reduction Act of 1995, no persons are required to respond to a collection of information unless it displays valid OMB control number.

PETITION TO ACCEPT UNINTENTIONALLY DELAYED PAYMENT OF MAINTENANCE FEE IN AN EXPIRED PATENT (37 CFR 1.378(c))

Patent Number	Issue Date (YYYY-MM-DD)	Application Number	Filing Date (YYYY-MM-DD)	Docket Number (if applicable)
5224506	1993-07-06	07801368	1991-12-02	188PM-901

CAUTION: Maintenance fee (and surcharge, if any) payment must correctly identify: (1) the patent number and (2) the application number of the actual U.S. application leading to issuance of that patent to ensure the fee(s) is/are associated with the correct patent. 37 CFR 1.366(c) and (d).

SMALL ENTITY
☒ Patentee claims, or has previously claimed, small entity status. See 37 CFR 1.27.

LOSS OF ENTITLEMENT TO SMALL ENTITY STATUS
☐ Patentee is no longer entitled to small entity status. See 37 CFR 1.27(g)

NOT Small Entity			Small Entity		
	Fee	Code		Fee	Code
○	3 ½ year	(1551)	○	3 ½ year	(2551)
○	7 ½ year	(1552)	○	7 ½ year	(2552)
○	11 ½ year	(1553)	◉	11 ½ year	(2553)

SURCHARGE
The surcharge required by 37 CFR 1.20(i)(2) (Fee Code 1558) must be paid as a condition of accepting unintentionally delayed payment of the maintenance fee.

MAINTENANCE FEE (37 CFR 1.20(e)-(g))
The appropriate maintenance fee must be submitted with this petition.

STATEMENT
THE UNDERSIGNED CERTIFIES THAT THE DELAY IN PAYMENT OF THE MAINTENANCE FEE TO THIS PATENT WAS UNINTENTIONAL

PETITIONER(S) REQUEST THAT THE DELAYED PAYMENT OF THE MAINTENANCE FEE BE ACCEPTED AND THE PATENT REINSTATED

THIS PORTION MUST BE COMPLETED BY THE SIGNATORY OR SIGNATORIES

37 CFR 1.378(d) states: "Any petition under this section must be signed by an attorney or agent registered to practice before the Patent and Trademark Office, or by the patentee, the assignee, or other party in interest."

I certify, in accordance with 37 CFR 1.4(d)(4) that I am

◉ An attorney or agent registered to practice before the Patent and Trademark Office

○ A sole patentee

○ A joint patentee; I certify that I am authorized to sign this submission on behalf of all the other patentees.

○ A joint patentee; all of whom are signing this e-petition

○ The assignee of record of the entire interest

Patent Practitioner			
A signature of the applicant or representative is required in accordance with 37 CFR 1.33 and 10.18. Please see 37 CFR 1.4(d) for the form of the signature			
Signature	/Bradley N Ruben/	Date (YYYY-MM-DD)	2007-07-04
Name	Bradley N. Ruben	Registration Number	32058

This collection of information is required by 37 CFR 1.378(c). The information is required to obtain or retain a benefit by the public which is to file (and by the USPTO to process) an application. Confidentiality is governed by 35 U.S.C. 122 and 37 CFR 1.11 and 1.14. This collection is estimated to take 1 hour to complete, including gathering, preparing, and submitting the completed application form to the USPTO. Time will vary depending upon the individual case. Any comments on the amount of time you require to complete this form and/ or suggestions for reducing this burden, should be sent to the Chief Information Officer, U.S. Patent and Trademark Office, U.S. Department of Commerce, P.O. Box 1450, Alexandria, VA 22313-1450. DO NOT SEND FEES OR COMPLETED FORMS TO THIS ADDRESS. **This form can only be used when in conjunction with EFS-Web. If this form is mailed to the USPTO, it may cause delays in reinstating the patent.**

Privacy Act Statement

The Privacy Act of 1974 (P.L. 93-579) requires that you be given certain information in connection with your submission of the attached form related to a patent application or patent. Accordingly, pursuant to the requirements of the Act, please be advised that: (1) the general authority for the collection of this information is 35 U.S.C. 2(b)(2); (2) furnishing of the information solicited is voluntary; and (3) the principal purpose for which the information is used by the U.S. Patent and Trademark Office is to process and/or examine your submission related to a patent application or patent. If you do not furnish the requested information, the U.S. Patent and Trademark Office may not be able to process and/or examine your submission, which may result in termination of proceedings or abandonment of the application or expiration of the patent.

The information provided by you in this form will be subject to the following routine uses:

1. The information on this form will be treated confidentially to the extent allowed under the Freedom of Information Act (5 U.S.C. 552) and the Privacy Act (5 U.S.C. 552a). Records from this system of records may be disclosed to the Department of Justice to determine whether the Freedom of Information Act requires disclosure of these record s.

2. A record from this system of records may be disclosed, as a routine use, in the course of presenting evidence to a court, magistrate, or administrative tribunal, including disclosures to opposing counsel in the course of settlement negotiations.

3. A record in this system of records may be disclosed, as a routine use, to a Member of Congress submitting a request involving an individual, to whom the record pertains, when the individual has requested assistance from the Member with respect to the subject matter of the record.

4. A record in this system of records may be disclosed, as a routine use, to a contractor of the Agency having need for the information in order to perform a contract. Recipients of information shall be required to comply with the requirements of the Privacy Act of 1974, as amended, pursuant to 5 U.S.C. 552a(m).

5. A record related to an International Application filed under the Patent Cooperation Treaty in this system of records may be disclosed, as a routine use, to the International Bureau of the World Intellectual Property Organization, pursuant to the Patent Cooperation Treaty.

6. A record in this system of records may be disclosed, as a routine use, to another federal agency for purposes of National Security review (35 U.S.C. 181) and for review pursuant to the Atomic Energy Act (42 U.S.C. 218(c)).

7. A record from this system of records may be disclosed, as a routine use, to the Administrator, General Services, or his/her designee, during an inspection of records conducted by GSA as part of that agency's responsibility to recommend improvements in records management practices and programs, under authority of 44 U.S.C. 2904 and 2906. Such disclosure shall be made in accordance with the GSA regulations governing inspection of records for this purpose, and any other relevant (i.e., GSA or Commerce) directive. Such disclosure shall not be used to make determinations about individuals.

8. A record from this system of records may be disclosed, as a routine use, to the public after either publication of the application pursuant to 35 U.S.C. 122(b) or issuance of a patent pursuant to 35 U.S.C. 151. Further, a record may be disclosed, subject to the limitations of 37 CFR 1.14, as a routine use, to the public if the record was filed in an application which became abandoned or in which the proceedings were terminated and which application is referenced by either a published application, an application open to public inspections or an issued patent.

9. A record from this system of records may be disclosed, as a routine use, to a Federal, State, or local law enforcement agency, if the USPTO becomes aware of a violation or potential violation of law or regulation.

UNITED STATES PATENT AND TRADEMARK OFFICE

Commissioner for Patents
United States Patent and Trademark Office
P.O. Box 1450
Alexandria, VA 22313-1450
www.uspto.gov

In re Patent No. 5224506
Issue Date: July 6,1993
Application No. 07801368
Filed: December 2,1991
Attorney Docket No. 83391-102

:
:DECISION GRANTING PETITION
:UNDER 37 CFR 1.378(c)
:

This is a decision on the electronic petition, filed July 4,2007 ,under 37 CFR 1.378(c) to accept the unintentionally delayed payment of the 11.5 year maintenance fee for the above-identified patent.

The petition is GRANTED.

The maintenance fee is accepted, and the above-identified patent reinstated as of July 4,2007 . This decision also constitutes notice that the fee has been accepted. An electronic copy of the petition and this decision has been created as an entry in an Image File Wrapper. Nevertheless, petitioner should print and retain an independent copy

Telephone inquires related to this electronic decision should be directed to the Electronic Business Center at 1-866-217-9197.

UNITED STATES PATENT AND TRADEMARK OFFICE

Commissioner for Patents
United States Patent and Trademark Office
P.O. Box 1450
Alexandria, VA 22313-1450
www.uspto.gov

BROMBERG & SUNSTEIN LLP
125 SUMMER STREET
BOSTON MA 02110-1618

COPY MAILED
NOV 0 2 2006
OFFICE OF PETITIONS

In re Patent No. 5,313,511 :
Issue Date: May 17, 1994 :
Application No. 07/809,246 : ON PETITION
Filed: December 18, 1991 :
Patentee(s): Martin Annis et al :

This is a decision on the petition, filed August 31, 2006, under 37 CFR 1.378(c) to accept the unintentionally delayed payment of a maintenance fee for the above-identified patent.

The petition is GRANTED.

The patent issued May 17, 1994. The grace period for paying the third maintenance fee expired on May 18, 2006. Therefore, since this petition was filed within twenty-four months after the six-month grace period provided in 37 CFR 1.362(e), this petition was timely filed under the provisions of 37 CFR 1.378(c).

Accordingly, the maintenance fee in this case is hereby accepted and the above-identified patent is hereby reinstated as of the mail date of this decision.

This file is being forwarded to Files Repository.

Telephone inquiries concerning this matter may be directed to the undersigned at (571) 272-3208.

Karen Creasy

Karen Creasy
Petitions Examiner
Office of Petitions

UNITED STATES PATENT AND TRADEMARK OFFICE

COMMISSIONER FOR PATENTS
UNITED STATES PATENT AND TRADEMARK OFFICE
P.O. BOX 1450
ALEXANDRIA, VA 22313-1450
WWW.USPTO.GOV

Paper No. 20

COPY MAILED

MAY 3 1 2006

OFFICE OF PETITIONS

ANDRUS, SCEALES, STARKE & SAWALL
100 EAST WISCONSIN AVE.
MILWAUKEE WI 53202

In re Application of
Alan W. Wilkerson
Application No. 07/810,961
Patent No. 5,283,726
Filed: December 20, 1991
Issue Date: February 1, 1994
Attorney Docket No. C.8650-11
Title: AC LINE CURRENT CONTROLLER UTILIZING LINE CONNECTED INDUCTANCE AND DC COMPONENT

DECISION ON PETITION
UNDER 37 C.F.R. §1.28(c)

This is a notice regarding your request for acceptance of a fee deficiency submission under 37 CFR §1.28. On September 1, 1998, the Court of Appeals for the Federal Circuit held that 37 CFR §1.28(c) is the sole provision governing the time for correction of the erroneous payment of the issue fee as a small entity. See DH Technology v. Synergystex International, Inc. 154 F.3d 1333, 47 USPQ2d 1865 (Fed. Cir. Sept. 1, 1998).

The Office no longer investigates or rejects original or reissue applications under 37 CFR §1.56. 1098 Off. Gaz. Pat. Office 502 (January 3, 1989). Therefore, nothing in this notice is intended to imply that an investigation was done.

Your fee deficiency submission under 37 CFR §1.28 is hereby accepted. The petition is **GRANTED** accordingly.

Telephone inquiries regarding *this decision* should be directed to the undersigned at (571) 272-3225.

Paul Shanoski
Senior Attorney
Office of Petitions
United States Patent and Trademark Office

Under the Paperwork Reduction Act of 1995, no persons are required to respond to a collection of information unless it displays valid OMB control number.

PETITION TO ACCEPT UNINTENTIONALLY DELAYED PAYMENT OF MAINTENANCE FEE IN AN EXPIRED PATENT (37 CFR 1.378(c))

Patent Number	Issue Date (YYYY-MM-DD)	Application Number	Filing Date (YYYY-MM-DD)	Docket Number (if applicable)
5,459,453	1995-10-17	07/812,336	1991-12-23	87194-US-CIP

CAUTION: Maintenance fee (and surcharge, if any) payment must correctly identify: (1) the patent number and (2) the application number of the actual U.S. application leading to issuance of that patent to ensure the fee(s) is/are associated with the correct patent. 37 CFR 1.366(c) and (d).

SMALL ENTITY
☐ Patentee claims, or has previously claimed, small entity status. See 37 CFR 1.27.

LOSS OF ENTITLEMENT TO SMALL ENTITY STATUS
☐ Patentee is no longer entitled to small entity status. See 37 CFR 1.27(g)

NOT Small Entity		Small Entity	
Fee	Code	Fee	Code
○ 3 ½ year	(1551)	○ 3 ½ year	(2551)
○ 7 ½ year	(1552)	○ 7 ½ year	(2552)
◉ 11 ½ year	(1553)	○ 11 ½ year	(2553)

SURCHARGE
The surcharge required by 37 CFR 1.20(i)(2) (Fee Code 1558) must be paid as a condition of accepting unintentionally delayed payment of the maintenance fee.

MAINTENANCE FEE (37 CFR 1.20(e)-(g))
The appropriate maintenance fee must be submitted with this petition.

STATEMENT
THE UNDERSIGNED CERTIFIES THAT THE DELAY IN PAYMENT OF THE MAINTENANCE FEE TO THIS PATENT WAS UNINTENTIONAL

PETITIONER(S) REQUEST THAT THE DELAYED PAYMENT OF THE MAINTENANCE FEE BE ACCEPTED AND THE PATENT REINSTATED

THIS PORTION MUST BE COMPLETED BY THE SIGNATORY OR SIGNATORIES

37 CFR 1.378(d) states: "Any petition under this section must be signed by an attorney or agent registered to practice before the Patent and Trademark Office, or by the patentee, the assignee, or other party in interest."

I certify, in accordance with 37 CFR 1.4(d)(4) that I am

◉ An attorney or agent registered to practice before the Patent and Trademark Office

○ A sole patentee

○ A joint patentee; I certify that I am authorized to sign this submission on behalf of all the other patentees.

○ A joint patentee; all of whom are signing this e-petition

○ The assignee of record of the entire interest

Patent Practitioner			
A signature of the applicant or representative is required in accordance with 37 CFR 1.33 and 10.18. Please see 37 CFR 1.4(d) for the form of the signature			
Signature	/Eugene O. Palazzo, Reg# 20881/	Date (YYYY-MM-DD)	2007-10-31
Name	Eugene O. Palazzo	Registration Number	20881

This collection of information is required by 37 CFR 1.378(c). The information is required to obtain or retain a benefit by the public which is to file (and by the USPTO to process) an application. Confidentiality is governed by 35 U.S.C. 122 and 37 CFR 1.11 and 1.14. This collection is estimated to take 1 hour to complete, including gathering, preparing, and submitting the completed application form to the USPTO. Time will vary depending upon the individual case. Any comments on the amount of time you require to complete this form and/ or suggestions for reducing this burden, should be sent to the Chief Information Officer, U.S. Patent and Trademark Office, U.S. Department of Commerce, P.O. Box 1450, Alexandria, VA 22313-1450. DO NOT SEND FEES OR COMPLETED FORMS TO THIS ADDRESS. **This form can only be used when in conjunction with EFS-Web. If this form is mailed to the USPTO, it may cause delays in reinstating the patent.**

Privacy Act Statement

The Privacy Act of 1974 (P.L. 93-579) requires that you be given certain information in connection with your submission of the attached form related to a patent application or patent. Accordingly, pursuant to the requirements of the Act, please be advised that: (1) the general authority for the collection of this information is 35 U.S.C. 2(b)(2); (2) furnishing of the information solicited is voluntary; and (3) the principal purpose for which the information is used by the U.S. Patent and Trademark Office is to process and/or examine your submission related to a patent application or patent. If you do not furnish the requested information, the U.S. Patent and Trademark Office may not be able to process and/or examine your submission, which may result in termination of proceedings or abandonment of the application or expiration of the patent.

The information provided by you in this form will be subject to the following routine uses:

1. The information on this form will be treated confidentially to the extent allowed under the Freedom of Information Act (5 U.S.C. 552) and the Privacy Act (5 U.S.C. 552a). Records from this system of records may be disclosed to the Department of Justice to determine whether the Freedom of Information Act requires disclosure of these record s.

2. A record from this system of records may be disclosed, as a routine use, in the course of presenting evidence to a court, magistrate, or administrative tribunal, including disclosures to opposing counsel in the course of settlement negotiations.

3. A record in this system of records may be disclosed, as a routine use, to a Member of Congress submitting a request involving an individual, to whom the record pertains, when the individual has requested assistance from the Member with respect to the subject matter of the record.

4. A record in this system of records may be disclosed, as a routine use, to a contractor of the Agency having need for the information in order to perform a contract. Recipients of information shall be required to comply with the requirements of the Privacy Act of 1974, as amended, pursuant to 5 U.S.C. 552a(m).

5. A record related to an International Application filed under the Patent Cooperation Treaty in this system of records may be disclosed, as a routine use, to the International Bureau of the World Intellectual Property Organization, pursuant to the Patent Cooperation Treaty.

6. A record in this system of records may be disclosed, as a routine use, to another federal agency for purposes of National Security review (35 U.S.C. 181) and for review pursuant to the Atomic Energy Act (42 U.S.C. 218(c)).

7. A record from this system of records may be disclosed, as a routine use, to the Administrator, General Services, or his/her designee, during an inspection of records conducted by GSA as part of that agency's responsibility to recommend improvements in records management practices and programs, under authority of 44 U.S.C. 2904 and 2906. Such disclosure shall be made in accordance with the GSA regulations governing inspection of records for this purpose, and any other relevant (i.e., GSA or Commerce) directive. Such disclosure shall not be used to make determinations about individuals.

8. A record from this system of records may be disclosed, as a routine use, to the public after either publication of the application pursuant to 35 U.S.C. 122(b) or issuance of a patent pursuant to 35 U.S.C. 151. Further, a record may be disclosed, subject to the limitations of 37 CFR 1.14, as a routine use, to the public if the record was filed in an application which became abandoned or in which the proceedings were terminated and which application is referenced by either a published application, an application open to public inspections or an issued patent.

9. A record from this system of records may be disclosed, as a routine use, to a Federal, State, or local law enforcement agency, if the USPTO becomes aware of a violation or potential violation of law or regulation.

UNITED STATES PATENT AND TRADEMARK OFFICE

Commissioner for Patents
United States Patent and Trademark Office
P.O. Box 1450
Alexandria, VA 22313-1450
www.uspto.gov

In re Patent No. 5459453
Issue Date: October 17,1995
Application No. 07812336
Filed: December 23,1991
Attorney Docket No. D/871941

:
:DECISION GRANTING PETITION
:UNDER 37 CFR 1.378(c)
:

This is a decision on the electronic petition, filed October 31,2007 ,under 37 CFR 1.378(c) to accept the unintentionally delayed payment of the 11.5 year maintenance fee for the above-identified patent.

The petition is GRANTED.

The maintenance fee is accepted, and the above-identified patent reinstated as of October 31,2007 . This decision also constitutes notice that the fee has been accepted. An electronic copy of the petition and this decision has been created as an entry in an Image File Wrapper. Nevertheless, petitioner should print and retain an independent copy

Telephone inquires related to this electronic decision should be directed to the Electronic Business Center at 1-866-217-9197.

Under the Paperwork Reduction Act of 1995, no persons are required to respond to a collection of information unless it displays valid OMB control number.

PETITION TO ACCEPT UNINTENTIONALLY DELAYED PAYMENT OF MAINTENANCE FEE IN AN EXPIRED PATENT (37 CFR 1.378(c))

Patent Number	Issue Date (YYYY-MM-DD)	Application Number	Filing Date (YYYY-MM-DD)	Docket Number (if applicable)
5290812	1994-03-01	07814477	1991-12-30	147682USMF

CAUTION: Maintenance fee (and surcharge, if any) payment must correctly identify: (1) the patent number and (2) the application number of the actual U.S. application leading to issuance of that patent to ensure the fee(s) is/are associated with the correct patent. 37 CFR 1.366(c) and (d).

SMALL ENTITY
☐ Patentee claims, or has previously claimed, small entity status. See 37 CFR 1.27.

LOSS OF ENTITLEMENT TO SMALL ENTITY STATUS
☐ Patentee is no longer entitled to small entity status. See 37 CFR 1.27(g)

NOT Small Entity		Small Entity	
Fee	Code	Fee	Code
○ 3 ½ year	(1551)	○ 3 ½ year	(2551)
○ 7 ½ year	(1552)	○ 7 ½ year	(2552)
◉ 11 ½ year	(1553)	○ 11 ½ year	(2553)

SURCHARGE
The surcharge required by 37 CFR 1.20(i)(2) (Fee Code 1558) must be paid as a condition of accepting unintentionally delayed payment of the maintenance fee.

MAINTENANCE FEE (37 CFR 1.20(e)-(g))
The appropriate maintenance fee must be submitted with this petition.

STATEMENT
THE UNDERSIGNED CERTIFIES THAT THE DELAY IN PAYMENT OF THE MAINTENANCE FEE TO THIS PATENT WAS UNINTENTIONAL

PETITIONER(S) REQUEST THAT THE DELAYED PAYMENT OF THE MAINTENANCE FEE BE ACCEPTED AND THE PATENT REINSTATED

THIS PORTION MUST BE COMPLETED BY THE SIGNATORY OR SIGNATORIES

37 CFR 1.378(d) states: "Any petition under this section must be signed by an attorney or agent registered to practice before the Patent and Trademark Office, or by the patentee, the assignee, or other party in interest."

I certify, in accordance with 37 CFR 1.4(d)(4) that I am

◉ An attorney or agent registered to practice before the Patent and Trademark Office

○ A sole patentee

○ A joint patentee; I certify that I am authorized to sign this submission on behalf of all the other patentees.

○ A joint patentee; all of whom are signing this e-petition

○ The assignee of record of the entire interest

Patent Practitioner			
A signature of the applicant or representative is required in accordance with 37 CFR 1.33 and 10.18. Please see 37 CFR 1.4(d) for the form of the signature			
Signature	/C. Irvin McClelland/	Date (YYYY-MM-DD)	2006-11-15
Name	C. Irvin McClelland	Registration Number	21124

This collection of information is required by 37 CFR 1.378(c). The information is required to obtain or retain a benefit by the public which is to file (and by the USPTO to process) an application. Confidentiality is governed by 35 U.S.C. 122 and 37 CFR 1.11 and 1.14. This collection is estimated to take 1 hour to complete, including gathering, preparing, and submitting the completed application form to the USPTO. Time will vary depending upon the individual case. Any comments on the amount of time you require to complete this form and/ or suggestions for reducing this burden, should be sent to the Chief Information Officer, U.S. Patent and Trademark Office, U.S. Department of Commerce, P.O. Box 1450, Alexandria, VA 22313-1450. DO NOT SEND FEES OR COMPLETED FORMS TO THIS ADDRESS. **This form can only be used when in conjunction with EFS-Web. If this form is mailed to the USPTO, it may cause delays in reinstating the patent.**

Privacy Act Statement

The Privacy Act of 1974 (P.L. 93-579) requires that you be given certain information in connection with your submission of the attached form related to a patent application or patent. Accordingly, pursuant to the requirements of the Act, please be advised that: (1) the general authority for the collection of this information is 35 U.S.C. 2(b)(2); (2) furnishing of the information solicited is voluntary; and (3) the principal purpose for which the information is used by the U.S. Patent and Trademark Office is to process and/or examine your submission related to a patent application or patent. If you do not furnish the requested information, the U.S. Patent and Trademark Office may not be able to process and/or examine your submission, which may result in termination of proceedings or abandonment of the application or expiration of the patent.

The information provided by you in this form will be subject to the following routine uses:

1. The information on this form will be treated confidentially to the extent allowed under the Freedom of Information Act (5 U.S.C. 552) and the Privacy Act (5 U.S.C. 552a). Records from this system of records may be disclosed to the Department of Justice to determine whether the Freedom of Information Act requires disclosure of these record s.

2. A record from this system of records may be disclosed, as a routine use, in the course of presenting evidence to a court, magistrate, or administrative tribunal, including disclosures to opposing counsel in the course of settlement negotiations.

3. A record in this system of records may be disclosed, as a routine use, to a Member of Congress submitting a request involving an individual, to whom the record pertains, when the individual has requested assistance from the Member with respect to the subject matter of the record.

4. A record in this system of records may be disclosed, as a routine use, to a contractor of the Agency having need for the information in order to perform a contract. Recipients of information shall be required to comply with the requirements of the Privacy Act of 1974, as amended, pursuant to 5 U.S.C. 552a(m).

5. A record related to an International Application filed under the Patent Cooperation Treaty in this system of records may be disclosed, as a routine use, to the International Bureau of the World Intellectual Property Organization, pursuant to the Patent Cooperation Treaty.

6. A record in this system of records may be disclosed, as a routine use, to another federal agency for purposes of National Security review (35 U.S.C. 181) and for review pursuant to the Atomic Energy Act (42 U.S.C. 218(c)).

7. A record from this system of records may be disclosed, as a routine use, to the Administrator, General Services, or his/her designee, during an inspection of records conducted by GSA as part of that agency's responsibility to recommend improvements in records management practices and programs, under authority of 44 U.S.C. 2904 and 2906. Such disclosure shall be made in accordance with the GSA regulations governing inspection of records for this purpose, and any other relevant (i.e., GSA or Commerce) directive. Such disclosure shall not be used to make determinations about individuals.

8. A record from this system of records may be disclosed, as a routine use, to the public after either publication of the application pursuant to 35 U.S.C. 122(b) or issuance of a patent pursuant to 35 U.S.C. 151. Further, a record may be disclosed, subject to the limitations of 37 CFR 1.14, as a routine use, to the public if the record was filed in an application which became abandoned or in which the proceedings were terminated and which application is referenced by either a published application, an application open to public inspections or an issued patent.

9. A record from this system of records may be disclosed, as a routine use, to a Federal, State, or local law enforcement agency, if the USPTO becomes aware of a violation or potential violation of law or regulation.

UNITED STATES PATENT AND TRADEMARK OFFICE

Commissioner for Patents
United States Patent and Trademark Office
P.O. Box 1450
Alexandria, VA 22313-1450
www.uspto.gov

In re Patent No. 5290812
Issue Date: March 1,1994
Application No. 07814477
Filed: December 30,1991
Attorney Docket No. 1703-048-0

:
:DECISION GRANTING PETITION
:UNDER 37 CFR 1.378(c)
:

This is a decision on the electronic petition, filed November 15,2006 ,under 37 CFR 1.378(c) to accept the unintentionally delayed payment of the 11.5 year maintenance fee for the above-identified patent.

The petition is GRANTED.

The maintenance fee is accepted, and the above-identified patent reinstated as of November 15,2006. This decision also constitutes notice that the fee has been accepted. An electronic copy of the petition and this decision has been created as an entry in an Image File Wrapper. Nevertheless, petitioner should print and retain an independent copy

Telephone inquires related to this electronic decision should be directed to the Electronic Business Center at 1-866-217-9197.

Approved for use through 04/30/2009. OMB 0651-0016
U.S. Patent and Trademark Office: U.S. DEPARTMENT OF COMMERCE
Under the Paperwork Reduction Act of 1995, no persons are required to respond to a collection of information unless it displays valid OMB control number.

PETITION TO ACCEPT UNINTENTIONALLY DELAYED PAYMENT OF MAINTENANCE FEE IN AN EXPIRED PATENT (37 CFR 1.378(c))

Patent Number	Issue Date (YYYY-MM-DD)	Application Number	Filing Date (YYYY-MM-DD)	Docket Number (if applicable)
5,334,823	1994-08-02	07819327	1992-01-10	12255-36931

CAUTION: Maintenance fee (and surcharge, if any) payment must correctly identify: (1) the patent number and (2) the application number of the actual U.S. application leading to issuance of that patent to ensure the fee(s) is/are associated with the correct patent. 37 CFR 1.366(c) and (d).

SMALL ENTITY
☐ Patentee claims, or has previously claimed, small entity status. See 37 CFR 1.27.

LOSS OF ENTITLEMENT TO SMALL ENTITY STATUS
☐ Patentee is no longer entitled to small entity status. See 37 CFR 1.27(g)

NOT Small Entity			Small Entity		
	Fee	Code		Fee	Code
○	3 ½ year	(1551)	○	3 ½ year	(2551)
○	7 ½ year	(1552)	○	7 ½ year	(2552)
◉	11 ½ year	(1553)	○	11 ½ year	(2553)

SURCHARGE
The surcharge required by 37 CFR 1.20(i)(2) (Fee Code 1558) must be paid as a condition of accepting unintentionally delayed payment of the maintenance fee.

MAINTENANCE FEE (37 CFR 1.20(e)-(g))
The appropriate maintenance fee must be submitted with this petition.

STATEMENT
THE UNDERSIGNED CERTIFIES THAT THE DELAY IN PAYMENT OF THE MAINTENANCE FEE TO THIS PATENT WAS UNINTENTIONAL

PETITIONER(S) REQUEST THAT THE DELAYED PAYMENT OF THE MAINTENANCE FEE BE ACCEPTED AND THE PATENT REINSTATED

THIS PORTION MUST BE COMPLETED BY THE SIGNATORY OR SIGNATORIES

37 CFR 1.378(d) states: "Any petition under this section must be signed by an attorney or agent registered to practice before the Patent and Trademark Office, or by the patentee, the assignee, or other party in interest."

I certify, in accordance with 37 CFR 1.4(d)(4) that I am

◉ An attorney or agent registered to practice before the Patent and Trademark Office

○ A sole patentee

○ A joint patentee; I certify that I am authorized to sign this submission on behalf of all the other patentees.

○ A joint patentee; all of whom are signing this e-petition

○ The assignee of record of the entire interest

Patent Practitioner			
A signature of the applicant or representative is required in accordance with 37 CFR 1.33 and 10.18. Please see 37 CFR 1.4(d) for the form of the signature			
Signature	/John R. Harris/	Date (YYYY-MM-DD)	2007-07-18
Name	John R. Harris	Registration Number	30388

This collection of information is required by 37 CFR 1.378(c). The information is required to obtain or retain a benefit by the public which is to file (and by the USPTO to process) an application. Confidentiality is governed by 35 U.S.C. 122 and 37 CFR 1.11 and 1.14. This collection is estimated to take 1 hour to complete, including gathering, preparing, and submitting the completed application form to the USPTO. Time will vary depending upon the individual case. Any comments on the amount of time you require to complete this form and/ or suggestions for reducing this burden, should be sent to the Chief Information Officer, U.S. Patent and Trademark Office, U.S. Department of Commerce, P.O. Box 1450, Alexandria, VA 22313-1450. DO NOT SEND FEES OR COMPLETED FORMS TO THIS ADDRESS. **This form can only be used when in conjunction with EFS-Web. If this form is mailed to the USPTO, it may cause delays in reinstating the patent.**

Privacy Act Statement

The Privacy Act of 1974 (P.L. 93-579) requires that you be given certain information in connection with your submission of the attached form related to a patent application or patent. Accordingly, pursuant to the requirements of the Act, please be advised that: (1) the general authority for the collection of this information is 35 U.S.C. 2(b)(2); (2) furnishing of the information solicited is voluntary; and (3) the principal purpose for which the information is used by the U.S. Patent and Trademark Office is to process and/or examine your submission related to a patent application or patent. If you do not furnish the requested information, the U.S. Patent and Trademark Office may not be able to process and/or examine your submission, which may result in termination of proceedings or abandonment of the application or expiration of the patent.

The information provided by you in this form will be subject to the following routine uses:

1. The information on this form will be treated confidentially to the extent allowed under the Freedom of Information Act (5 U.S.C. 552) and the Privacy Act (5 U.S.C. 552a). Records from this system of records may be disclosed to the Department of Justice to determine whether the Freedom of Information Act requires disclosure of these record s.

2. A record from this system of records may be disclosed, as a routine use, in the course of presenting evidence to a court, magistrate, or administrative tribunal, including disclosures to opposing counsel in the course of settlement negotiations.

3. A record in this system of records may be disclosed, as a routine use, to a Member of Congress submitting a request involving an individual, to whom the record pertains, when the individual has requested assistance from the Member with respect to the subject matter of the record.

4. A record in this system of records may be disclosed, as a routine use, to a contractor of the Agency having need for the information in order to perform a contract. Recipients of information shall be required to comply with the requirements of the Privacy Act of 1974, as amended, pursuant to 5 U.S.C. 552a(m).

5. A record related to an International Application filed under the Patent Cooperation Treaty in this system of records may be disclosed, as a routine use, to the International Bureau of the World Intellectual Property Organization, pursuant to the Patent Cooperation Treaty.

6. A record in this system of records may be disclosed, as a routine use, to another federal agency for purposes of National Security review (35 U.S.C. 181) and for review pursuant to the Atomic Energy Act (42 U.S.C. 218(c)).

7. A record from this system of records may be disclosed, as a routine use, to the Administrator, General Services, or his/her designee, during an inspection of records conducted by GSA as part of that agency's responsibility to recommend improvements in records management practices and programs, under authority of 44 U.S.C. 2904 and 2906. Such disclosure shall be made in accordance with the GSA regulations governing inspection of records for this purpose, and any other relevant (i.e., GSA or Commerce) directive. Such disclosure shall not be used to make determinations about individuals.

8. A record from this system of records may be disclosed, as a routine use, to the public after either publication of the application pursuant to 35 U.S.C. 122(b) or issuance of a patent pursuant to 35 U.S.C. 151. Further, a record may be disclosed, subject to the limitations of 37 CFR 1.14, as a routine use, to the public if the record was filed in an application which became abandoned or in which the proceedings were terminated and which application is referenced by either a published application, an application open to public inspections or an issued patent.

9. A record from this system of records may be disclosed, as a routine use, to a Federal, State, or local law enforcement agency, if the USPTO becomes aware of a violation or potential violation of law or regulation.

UNITED STATES PATENT AND TRADEMARK OFFICE

Commissioner for Patents
United States Patent and Trademark Office
P.O. Box 1450
Alexandria, VA 22313-1450
www.uspto.gov

In re Patent No. 5334823
Issue Date: August 2,1994
Application No. 07819327
Filed: January 10,1992
Attorney Docket No. 13019-0140

:
:DECISION GRANTING PETITION
:UNDER 37 CFR 1.378(c)
:

This is a decision on the electronic petition, filed July 18,2007 ,under 37 CFR 1.378(c) to accept the unintentionally delayed payment of the 11.5 year maintenance fee for the above-identified patent.

The petition is GRANTED.

The maintenance fee is accepted, and the above-identified patent reinstated as of July 18,2007 . This decision also constitutes notice that the fee has been accepted. An electronic copy of the petition and this decision has been created as an entry in an Image File Wrapper. Nevertheless, petitioner should print and retain an independent copy

Telephone inquires related to this electronic decision should be directed to the Electronic Business Center at 1-866-217-9197.

UNITED STATES PATENT AND TRADEMARK OFFICE

Commissioner for Patents
United States Patent and Trademark Office
P. O. Box 1450
Alexandria, VA 22313-1450
www.uspto.gov

Paper No. 19

OLE K. NILSSEN
200 N HARRISON STREET
SUITE 103
ALGONQUIN, IL 60102

COPY MAILED
SEP 14 2006
OFFICE OF PETITIONS

In re Patent No. 5,191,262 :
Issue Date: March 2, 1993 :
Application No. 07/819,655 : NOTICE
Filed: January 13, 1992 :
Attorney Docket No.

This is a notice regarding your request for acceptance of a fee deficiency submission under 37 CFR 1.28. On September 1, 1998, the Court of Appeals for the Federal Circuit held that 37 CFR 1.28(c) is the sole provision governing the time for correction of the erroneous payment of the issue fee as a small entity. **See DH Technology v. Synergystex International, Inc. 154 F.3d 1333, 47 USPQ2d 1865 (Fed. Cir. Sept. 1, 1998).**

The Office no longer investigates or rejects original or reissue applications under 37 CFR 1.56. **1098 Off. Gaz. Pat. Office 502 (January 3, 1989)**. Therefore, nothing in this Notice is intended to imply that an investigation was done.

Your fee deficiency submission under 37 CFR 1.28 is hereby **ACCEPTED**.

Inquiries related to this communication should be directed to Irvin Dingle at (571) 272-3210.

This file is being forwarded to the Files Repository.

Irvin Dingle
Petitions Examiner
Office of Petitions

Approved for use through 04/30/2009. OMB 0651-0016
U.S. Patent and Trademark Office: U.S. DEPARTMENT OF COMMERCE
Under the Paperwork Reduction Act of 1995, no persons are required to respond to a collection of information unless it displays valid OMB control number.

PETITION TO ACCEPT UNINTENTIONALLY DELAYED PAYMENT OF MAINTENANCE FEE IN AN EXPIRED PATENT (37 CFR 1.378(c))

Patent Number	Issue Date (YYYY-MM-DD)	Application Number	Filing Date (YYYY-MM-DD)	Docket Number (if applicable)
5,428,210	1995-06-27	07/820,401	1992-01-10	REMB-0103

CAUTION: Maintenance fee (and surcharge, if any) payment must correctly identify: (1) the patent number and (2) the application number of the actual U.S. application leading to issuance of that patent to ensure the fee(s) is/are associated with the correct patent. 37 CFR 1.366(c) and (d).

SMALL ENTITY
☐ Patentee claims, or has previously claimed, small entity status. See 37 CFR 1.27.

LOSS OF ENTITLEMENT TO SMALL ENTITY STATUS
☐ Patentee is no longer entitled to small entity status. See 37 CFR 1.27(g)

NOT Small Entity			Small Entity		
	Fee	Code		Fee	Code
○	3 ½ year	(1551)	○	3 ½ year	(2551)
○	7 ½ year	(1552)	○	7 ½ year	(2552)
◉	11 ½ year	(1553)	○	11 ½ year	(2553)

SURCHARGE
The surcharge required by 37 CFR 1.20(i)(2) (Fee Code 1558) must be paid as a condition of accepting unintentionally delayed payment of the maintenance fee.

MAINTENANCE FEE (37 CFR 1.20(e)-(g))
The appropriate maintenance fee must be submitted with this petition.

STATEMENT
THE UNDERSIGNED CERTIFIES THAT THE DELAY IN PAYMENT OF THE MAINTENANCE FEE TO THIS PATENT WAS UNINTENTIONAL

PETITIONER(S) REQUEST THAT THE DELAYED PAYMENT OF THE MAINTENANCE FEE BE ACCEPTED AND THE PATENT REINSTATED

THIS PORTION MUST BE COMPLETED BY THE SIGNATORY OR SIGNATORIES

37 CFR 1.378(d) states: "Any petition under this section must be signed by an attorney or agent registered to practice before the Patent and Trademark Office, or by the patentee, the assignee, or other party in interest."

I certify, in accordance with 37 CFR 1.4(d)(4) that I am

◉ An attorney or agent registered to practice before the Patent and Trademark Office

○ A sole patentee

○ A joint patentee; I certify that I am authorized to sign this submission on behalf of all the other patentees.

○ A joint patentee; all of whom are signing this e-petition

○ The assignee of record of the entire interest

Patent Practitioner			
A signature of the applicant or representative is required in accordance with 37 CFR 1.33 and 10.18. Please see 37 CFR 1.4(d) for the form of the signature			
Signature	/Vincent J. Roccia/	Date (YYYY-MM-DD)	2008-01-22
Name	Vincent J. Roccia	Registration Number	43887

This collection of information is required by 37 CFR 1.378(c). The information is required to obtain or retain a benefit by the public which is to file (and by the USPTO to process) an application. Confidentiality is governed by 35 U.S.C. 122 and 37 CFR 1.11 and 1.14. This collection is estimated to take 1 hour to complete, including gathering, preparing, and submitting the completed application form to the USPTO. Time will vary depending upon the individual case. Any comments on the amount of time you require to complete this form and/ or suggestions for reducing this burden, should be sent to the Chief Information Officer, U.S. Patent and Trademark Office, U.S. Department of Commerce, P.O. Box 1450, Alexandria, VA 22313-1450. DO NOT SEND FEES OR COMPLETED FORMS TO THIS ADDRESS. **This form can only be used when in conjunction with EFS-Web. If this form is mailed to the USPTO, it may cause delays in reinstating the patent.**

Privacy Act Statement

The Privacy Act of 1974 (P.L. 93-579) requires that you be given certain information in connection with your submission of the attached form related to a patent application or patent. Accordingly, pursuant to the requirements of the Act, please be advised that: (1) the general authority for the collection of this information is 35 U.S.C. 2(b)(2); (2) furnishing of the information solicited is voluntary; and (3) the principal purpose for which the information is used by the U.S. Patent and Trademark Office is to process and/or examine your submission related to a patent application or patent. If you do not furnish the requested information, the U.S. Patent and Trademark Office may not be able to process and/or examine your submission, which may result in termination of proceedings or abandonment of the application or expiration of the patent.

The information provided by you in this form will be subject to the following routine uses:

1. The information on this form will be treated confidentially to the extent allowed under the Freedom of Information Act (5 U.S.C. 552) and the Privacy Act (5 U.S.C. 552a). Records from this system of records may be disclosed to the Department of Justice to determine whether the Freedom of Information Act requires disclosure of these record s.

2. A record from this system of records may be disclosed, as a routine use, in the course of presenting evidence to a court, magistrate, or administrative tribunal, including disclosures to opposing counsel in the course of settlement negotiations.

3. A record in this system of records may be disclosed, as a routine use, to a Member of Congress submitting a request involving an individual, to whom the record pertains, when the individual has requested assistance from the Member with respect to the subject matter of the record.

4. A record in this system of records may be disclosed, as a routine use, to a contractor of the Agency having need for the information in order to perform a contract. Recipients of information shall be required to comply with the requirements of the Privacy Act of 1974, as amended, pursuant to 5 U.S.C. 552a(m).

5. A record related to an International Application filed under the Patent Cooperation Treaty in this system of records may be disclosed, as a routine use, to the International Bureau of the World Intellectual Property Organization, pursuant to the Patent Cooperation Treaty.

6. A record in this system of records may be disclosed, as a routine use, to another federal agency for purposes of National Security review (35 U.S.C. 181) and for review pursuant to the Atomic Energy Act (42 U.S.C. 218(c)).

7. A record from this system of records may be disclosed, as a routine use, to the Administrator, General Services, or his/her designee, during an inspection of records conducted by GSA as part of that agency's responsibility to recommend improvements in records management practices and programs, under authority of 44 U.S.C. 2904 and 2906. Such disclosure shall be made in accordance with the GSA regulations governing inspection of records for this purpose, and any other relevant (i.e., GSA or Commerce) directive. Such disclosure shall not be used to make determinations about individuals.

8. A record from this system of records may be disclosed, as a routine use, to the public after either publication of the application pursuant to 35 U.S.C. 122(b) or issuance of a patent pursuant to 35 U.S.C. 151. Further, a record may be disclosed, subject to the limitations of 37 CFR 1.14, as a routine use, to the public if the record was filed in an application which became abandoned or in which the proceedings were terminated and which application is referenced by either a published application, an application open to public inspections or an issued patent.

9. A record from this system of records may be disclosed, as a routine use, to a Federal, State, or local law enforcement agency, if the USPTO becomes aware of a violation or potential violation of law or regulation.

UNITED STATES PATENT AND TRADEMARK OFFICE

Commissioner for Patents
United States Patent and Trademark Office
P.O. Box 1450
Alexandria, VA 22313-1450
www.uspto.gov

In re Patent No. 5428210
Issue Date: June 27,1995
Application No. 07820401
Filed: January 10,1992
Attorney Docket No. 13019-0120

:

:DECISION GRANTING PETITION
:UNDER 37 CFR 1.378(c)

:

This is a decision on the electronic petition, filed January 22,2008 ,under 37 CFR 1.378(c) to accept the unintentionally delayed payment of the 11.5 year maintenance fee for the above-identified patent.

The petition is GRANTED.

The maintenance fee is accepted, and the above-identified patent reinstated as of January 22,2008 . This decision also constitutes notice that the fee has been accepted. An electronic copy of the petition and this decision has been created as an entry in an Image File Wrapper. Nevertheless, petitioner should print and retain an independent copy

Telephone inquires related to this electronic decision should be directed to the Electronic Business Center at 1-866-217-9197.

Approved for use through 04/30/2009. OMB 0651-0016
U.S. Patent and Trademark Office: U.S. DEPARTMENT OF COMMERCE
Under the Paperwork Reduction Act of 1995, no persons are required to respond to a collection of information unless it displays valid OMB control number.

PETITION TO ACCEPT UNINTENTIONALLY DELAYED PAYMENT OF MAINTENANCE FEE IN AN EXPIRED PATENT (37 CFR 1.378(c))

Patent Number	Issue Date (YYYY-MM-DD)	Application Number	Filing Date (YYYY-MM-DD)	Docket Number (if applicable)
5,362,356	1994-11-08	07/821,727	1992-01-14	LLC-2072

CAUTION: Maintenance fee (and surcharge, if any) payment must correctly identify: (1) the patent number and (2) the application number of the actual U.S. application leading to issuance of that patent to ensure the fee(s) is/are associated with the correct patent. 37 CFR 1.366(c) and (d).

SMALL ENTITY
☐ Patentee claims, or has previously claimed, small entity status. See 37 CFR 1.27.

LOSS OF ENTITLEMENT TO SMALL ENTITY STATUS
☐ Patentee is no longer entitled to small entity status. See 37 CFR 1.27(g)

NOT Small Entity		Small Entity	
Fee	Code	Fee	Code
○ 3 ½ year	(1551)	○ 3 ½ year	(2551)
○ 7 ½ year	(1552)	○ 7 ½ year	(2552)
◉ 11 ½ year	(1553)	○ 11 ½ year	(2553)

SURCHARGE
The surcharge required by 37 CFR 1.20(i)(2) (Fee Code 1558) must be paid as a condition of accepting unintentionally delayed payment of the maintenance fee.

MAINTENANCE FEE (37 CFR 1.20(e)-(g))
The appropriate maintenance fee must be submitted with this petition.

STATEMENT
THE UNDERSIGNED CERTIFIES THAT THE DELAY IN PAYMENT OF THE MAINTENANCE FEE TO THIS PATENT WAS UNINTENTIONAL

PETITIONER(S) REQUEST THAT THE DELAYED PAYMENT OF THE MAINTENANCE FEE BE ACCEPTED AND THE PATENT REINSTATED

THIS PORTION MUST BE COMPLETED BY THE SIGNATORY OR SIGNATORIES

37 CFR 1.378(d) states: "Any petition under this section must be signed by an attorney or agent registered to practice before the Patent and Trademark Office, or by the patentee, the assignee, or other party in interest."

I certify, in accordance with 37 CFR 1.4(d)(4) that I am

◉ An attorney or agent registered to practice before the Patent and Trademark Office

○ A sole patentee

○ A joint patentee; I certify that I am authorized to sign this submission on behalf of all the other patentees.

○ A joint patentee; all of whom are signing this e-petition

○ The assignee of record of the entire interest

Patent Practitioner			
A signature of the applicant or representative is required in accordance with 37 CFR 1.33 and 10.18. Please see 37 CFR 1.4(d) for the form of the signature			
Signature	/Christopher P. Maiorana/	Date (YYYY-MM-DD)	2007-03-30
Name	Christopher P. Maiorana	Registration Number	42829

This collection of information is required by 37 CFR 1.378(c). The information is required to obtain or retain a benefit by the public which is to file (and by the USPTO to process) an application. Confidentiality is governed by 35 U.S.C. 122 and 37 CFR 1.11 and 1.14. This collection is estimated to take 1 hour to complete, including gathering, preparing, and submitting the completed application form to the USPTO. Time will vary depending upon the individual case. Any comments on the amount of time you require to complete this form and/ or suggestions for reducing this burden, should be sent to the Chief Information Officer, U.S. Patent and Trademark Office, U.S. Department of Commerce, P.O. Box 1450, Alexandria, VA 22313-1450. DO NOT SEND FEES OR COMPLETED FORMS TO THIS ADDRESS. **This form can only be used when in conjunction with EFS-Web. If this form is mailed to the USPTO, it may cause delays in reinstating the patent.**

Privacy Act Statement

The Privacy Act of 1974 (P.L. 93-579) requires that you be given certain information in connection with your submission of the attached form related to a patent application or patent. Accordingly, pursuant to the requirements of the Act, please be advised that: (1) the general authority for the collection of this information is 35 U.S.C. 2(b)(2); (2) furnishing of the information solicited is voluntary; and (3) the principal purpose for which the information is used by the U.S. Patent and Trademark Office is to process and/or examine your submission related to a patent application or patent. If you do not furnish the requested information, the U.S. Patent and Trademark Office may not be able to process and/or examine your submission, which may result in termination of proceedings or abandonment of the application or expiration of the patent.

The information provided by you in this form will be subject to the following routine uses:

1. The information on this form will be treated confidentially to the extent allowed under the Freedom of Information Act (5 U.S.C. 552) and the Privacy Act (5 U.S.C. 552a). Records from this system of records may be disclosed to the Department of Justice to determine whether the Freedom of Information Act requires disclosure of these record s.

2. A record from this system of records may be disclosed, as a routine use, in the course of presenting evidence to a court, magistrate, or administrative tribunal, including disclosures to opposing counsel in the course of settlement negotiations.

3. A record in this system of records may be disclosed, as a routine use, to a Member of Congress submitting a request involving an individual, to whom the record pertains, when the individual has requested assistance from the Member with respect to the subject matter of the record.

4. A record in this system of records may be disclosed, as a routine use, to a contractor of the Agency having need for the information in order to perform a contract. Recipients of information shall be required to comply with the requirements of the Privacy Act of 1974, as amended, pursuant to 5 U.S.C. 552a(m).

5. A record related to an International Application filed under the Patent Cooperation Treaty in this system of records may be disclosed, as a routine use, to the International Bureau of the World Intellectual Property Organization, pursuant to the Patent Cooperation Treaty.

6. A record in this system of records may be disclosed, as a routine use, to another federal agency for purposes of National Security review (35 U.S.C. 181) and for review pursuant to the Atomic Energy Act (42 U.S.C. 218(c)).

7. A record from this system of records may be disclosed, as a routine use, to the Administrator, General Services, or his/her designee, during an inspection of records conducted by GSA as part of that agency's responsibility to recommend improvements in records management practices and programs, under authority of 44 U.S.C. 2904 and 2906. Such disclosure shall be made in accordance with the GSA regulations governing inspection of records for this purpose, and any other relevant (i.e., GSA or Commerce) directive. Such disclosure shall not be used to make determinations about individuals.

8. A record from this system of records may be disclosed, as a routine use, to the public after either publication of the application pursuant to 35 U.S.C. 122(b) or issuance of a patent pursuant to 35 U.S.C. 151. Further, a record may be disclosed, subject to the limitations of 37 CFR 1.14, as a routine use, to the public if the record was filed in an application which became abandoned or in which the proceedings were terminated and which application is referenced by either a published application, an application open to public inspections or an issued patent.

9. A record from this system of records may be disclosed, as a routine use, to a Federal, State, or local law enforcement agency, if the USPTO becomes aware of a violation or potential violation of law or regulation.

UNITED STATES PATENT AND TRADEMARK OFFICE

Commissioner for Patents
United States Patent and Trademark Office
P.O. Box 1450
Alexandria, VA 22313-1450
www.uspto.gov

In re Patent No. 5362356
Issue Date: November 8,1994
Application No. 07821727
Filed: January 14,1992
Attorney Docket No. LLC-2072-(91

:
:DECISION GRANTING PETITION
:UNDER 37 CFR 1.378(c)
:

This is a decision on the electronic petition, filed March 30,2007 ,under 37 CFR 1.378(c) to accept the unintentionally delayed payment of the 11.5 year maintenance fee for the above-identified patent.

The petition is GRANTED.

The maintenance fee is accepted, and the above-identified patent reinstated as of March 30,2007 . This decision also constitutes notice that the fee has been accepted. An electronic copy of the petition and this decision has been created as an entry in an Image File Wrapper. Nevertheless, petitioner should print and retain an independent copy

Telephone inquires related to this electronic decision should be directed to the Electronic Business Center at 1-866-217-9197.

Under the Paperwork Reduction Act of 1995, no persons are required to respond to a collection of information unless it displays valid OMB control number.

PETITION TO ACCEPT UNINTENTIONALLY DELAYED PAYMENT OF MAINTENANCE FEE IN AN EXPIRED PATENT (37 CFR 1.378(c))

Patent Number	Issue Date (YYYY-MM-DD)	Application Number	Filing Date (YYYY-MM-DD)	Docket Number (if applicable)
5260826	1993-11-09	07823262	1992-01-21	100.053

CAUTION: Maintenance fee (and surcharge, if any) payment must correctly identify: (1) the patent number and (2) the application number of the actual U.S. application leading to issuance of that patent to ensure the fee(s) is/are associated with the correct patent. 37 CFR 1.366(c) and (d).

SMALL ENTITY
☒ Patentee claims, or has previously claimed, small entity status. See 37 CFR 1.27.

LOSS OF ENTITLEMENT TO SMALL ENTITY STATUS
☐ Patentee is no longer entitled to small entity status. See 37 CFR 1.27(g)

NOT Small Entity			Small Entity		
	Fee	Code		Fee	Code
○	3 ½ year	(1551)	○	3 ½ year	(2551)
○	7 ½ year	(1552)	○	7 ½ year	(2552)
○	11 ½ year	(1553)	◉	11 ½ year	(2553)

SURCHARGE
The surcharge required by 37 CFR 1.20(i)(2) (Fee Code 1558) must be paid as a condition of accepting unintentionally delayed payment of the maintenance fee.

MAINTENANCE FEE (37 CFR 1.20(e)-(g))
The appropriate maintenance fee must be submitted with this petition.

STATEMENT
THE UNDERSIGNED CERTIFIES THAT THE DELAY IN PAYMENT OF THE MAINTENANCE FEE TO THIS PATENT WAS UNINTENTIONAL

PETITIONER(S) REQUEST THAT THE DELAYED PAYMENT OF THE MAINTENANCE FEE BE ACCEPTED AND THE PATENT REINSTATED

THIS PORTION MUST BE COMPLETED BY THE SIGNATORY OR SIGNATORIES

37 CFR 1.378(d) states: "Any petition under this section must be signed by an attorney or agent registered to practice before the Patent and Trademark Office, or by the patentee, the assignee, or other party in interest."

I certify, in accordance with 37 CFR 1.4(d)(4) that I am

◉ An attorney or agent registered to practice before the Patent and Trademark Office

○ A sole patentee

○ A joint patentee; I certify that I am authorized to sign this submission on behalf of all the other patentees.

○ A joint patentee; all of whom are signing this e-petition

○ The assignee of record of the entire interest

Patent Practitioner			
A signature of the applicant or representative is required in accordance with 37 CFR 1.33 and 10.18. Please see 37 CFR 1.4(d) for the form of the signature			
Signature	/Leonard Tachner/	Date (YYYY-MM-DD)	2007-10-11
Name	Leonard Tachner	Registration Number	26344

This collection of information is required by 37 CFR 1.378(c). The information is required to obtain or retain a benefit by the public which is to file (and by the USPTO to process) an application. Confidentiality is governed by 35 U.S.C. 122 and 37 CFR 1.11 and 1.14. This collection is estimated to take 1 hour to complete, including gathering, preparing, and submitting the completed application form to the USPTO. Time will vary depending upon the individual case. Any comments on the amount of time you require to complete this form and/ or suggestions for reducing this burden, should be sent to the Chief Information Officer, U.S. Patent and Trademark Office, U.S. Department of Commerce, P.O. Box 1450, Alexandria, VA 22313-1450. DO NOT SEND FEES OR COMPLETED FORMS TO THIS ADDRESS. **This form can only be used when in conjunction with EFS-Web. If this form is mailed to the USPTO, it may cause delays in reinstating the patent.**

Privacy Act Statement

The Privacy Act of 1974 (P.L. 93-579) requires that you be given certain information in connection with your submission of the attached form related to a patent application or patent. Accordingly, pursuant to the requirements of the Act, please be advised that: (1) the general authority for the collection of this information is 35 U.S.C. 2(b)(2); (2) furnishing of the information solicited is voluntary; and (3) the principal purpose for which the information is used by the U.S. Patent and Trademark Office is to process and/or examine your submission related to a patent application or patent. If you do not furnish the requested information, the U.S. Patent and Trademark Office may not be able to process and/or examine your submission, which may result in termination of proceedings or abandonment of the application or expiration of the patent.

The information provided by you in this form will be subject to the following routine uses:

1. The information on this form will be treated confidentially to the extent allowed under the Freedom of Information Act (5 U.S.C. 552) and the Privacy Act (5 U.S.C. 552a). Records from this system of records may be disclosed to the Department of Justice to determine whether the Freedom of Information Act requires disclosure of these record s.

2. A record from this system of records may be disclosed, as a routine use, in the course of presenting evidence to a court, magistrate, or administrative tribunal, including disclosures to opposing counsel in the course of settlement negotiations.

3. A record in this system of records may be disclosed, as a routine use, to a Member of Congress submitting a request involving an individual, to whom the record pertains, when the individual has requested assistance from the Member with respect to the subject matter of the record.

4. A record in this system of records may be disclosed, as a routine use, to a contractor of the Agency having need for the information in order to perform a contract. Recipients of information shall be required to comply with the requirements of the Privacy Act of 1974, as amended, pursuant to 5 U.S.C. 552a(m).

5. A record related to an International Application filed under the Patent Cooperation Treaty in this system of records may be disclosed, as a routine use, to the International Bureau of the World Intellectual Property Organization, pursuant to the Patent Cooperation Treaty.

6. A record in this system of records may be disclosed, as a routine use, to another federal agency for purposes of National Security review (35 U.S.C. 181) and for review pursuant to the Atomic Energy Act (42 U.S.C. 218(c)).

7. A record from this system of records may be disclosed, as a routine use, to the Administrator, General Services, or his/her designee, during an inspection of records conducted by GSA as part of that agency's responsibility to recommend improvements in records management practices and programs, under authority of 44 U.S.C. 2904 and 2906. Such disclosure shall be made in accordance with the GSA regulations governing inspection of records for this purpose, and any other relevant (i.e., GSA or Commerce) directive. Such disclosure shall not be used to make determinations about individuals.

8. A record from this system of records may be disclosed, as a routine use, to the public after either publication of the application pursuant to 35 U.S.C. 122(b) or issuance of a patent pursuant to 35 U.S.C. 151. Further, a record may be disclosed, subject to the limitations of 37 CFR 1.14, as a routine use, to the public if the record was filed in an application which became abandoned or in which the proceedings were terminated and which application is referenced by either a published application, an application open to public inspections or an issued patent.

9. A record from this system of records may be disclosed, as a routine use, to a Federal, State, or local law enforcement agency, if the USPTO becomes aware of a violation or potential violation of law or regulation.

UNITED STATES PATENT AND TRADEMARK OFFICE

Commissioner for Patents
United States Patent and Trademark Office
P.O. Box 1450
Alexandria, VA 22313-1450
www.uspto.gov

In re Patent No. 5260826
Issue Date: November 9,1993
Application No. 07823262
Filed: January 21,1992
Attorney Docket No. L1.030

:
:DECISION GRANTING PETITION
:UNDER 37 CFR 1.378(c)
:

This is a decision on the electronic petition, filed October 11,2007 ,under 37 CFR 1.378(c) to accept the unintentionally delayed payment of the 11.5 year maintenance fee for the above-identified patent.

The petition is GRANTED.

The maintenance fee is accepted, and the above-identified patent reinstated as of October 11,2007 . This decision also constitutes notice that the fee has been accepted. An electronic copy of the petition and this decision has been created as an entry in an Image File Wrapper. Nevertheless, petitioner should print and retain an independent copy

Telephone inquires related to this electronic decision should be directed to the Electronic Business Center at 1-866-217-9197.

UNITED STATES PATENT AND TRADEMARK OFFICE

UNITED STATES DEPARTMENT OF COMMERCE
United States Patent and Trademark Office
Address: COMMISSIONER FOR PATENTS
P.O. Box 1450
Alexandria, Virginia 22313-1450
www.uspto.gov

APPLICATION NO.	FILING DATE	FIRST NAMED INVENTOR	ATTORNEY DOCKET NO.	CONFIRMATION NO.
07/824,287	01/23/1992	KAZUFUMI OGAWA	356972011700	8599

25227 7590 11/17/2009
MORRISON & FOERSTER LLP
1650 TYSONS BOULEVARD
SUITE 400
MCLEAN, VA 22102

EXAMINER
WATKINS III, WILLIAM P

ART UNIT	PAPER NUMBER
1508	

MAIL DATE	DELIVERY MODE
11/17/2009	PAPER

Please find below and/or attached an Office communication concerning this application or proceeding.

The time period for reply, if any, is set in the attached communication.

SPE RESPONSE FOR CERTIFICATE OF CORRECTION

Paper No.: _____

DATE : 9-18-09

TO SPE OF : ART UNIT 1700

SUBJECT : Request for Certificate of Correction for Appl. No.: 07/824287 Patent No.: 5324566

Please respond to this request for a certificate of correction within 7 days.

FOR IFW FILES:

Please review the requested changes/corrections as shown in the **COCIN** document(s) in the IFW application image. No new matter should be introduced, nor should the scope or meaning of the claims be changed.

Rena

Please complete the response (see below) and forward the completed response to scanning using document code **COCX**.

FOR PAPER FILES:

Please review the requested changes/corrections as shown in the attached certificate of correction. Please complete this form (see below) and forward it with the file to:

Certificates of Correction Branch (CofC)
South Tower - 9A22
Palm Location 7580

Should inventor be added?

E. Jones 69770
Certificates of Correction Branch
703-308-9390 ext. _____

Thank You For Your Assistance

The request for issuing the above-identified correction(s) is hereby:
Note your decision on the appropriate box.

- [x] **Approved** — **All** changes apply.
- [ ] **Approved in Part** — Specify below which changes **do not** apply.
- [ ] **Denied** — State the reasons for denial below.

Comments: CHANGE OF INVENTORSHIP APPROVED. SEE "DECISION GRANTING PETITION

DAVID SAMPLE
SUPERVISORY PATENT EXAMINER

SPE

1794
Art Unit

PTO/SB/44 (07-07)
Approved for use through 07/31/2007. OMB 0651-0033
U.S. Patent and Trademark Office; U.S. DEPARTMENT OF COMMERCE
Under the Paperwork Reduction Act of 1995, no persons are required to respond to a collection of information unless it displays a valid OMB control number.
(Also Form PTO-1050)

UNITED STATES PATENT AND TRADEMARK OFFICE
CERTIFICATE OF CORRECTION

PATENT NO.	:	5,324,566
APPLICATION NO.	:	07/824,287
ISSUE DATE	:	June 28, 1994
INVENTOR(S)	:	Kazufumi OGAWA et al.

It is certified that an error appears or errors appear in the above-identified patent and that said Letters Patent is hereby corrected as shown below:

On the ~~front~~ page: Title item [75] under Inventors:

Add the inventor "Norihisa MINO"

MAILING ADDRESS OF SENDER (Please do not use customer number below):
Barry E. Bretschneider
MORRISON & FOERSTER LLP
1650 Tysons Blvd, Suite 400
McLean, Virginia 22102

va-281377

#22

UNITED STATES PATENT AND TRADEMARK OFFICE

COMMISSIONER FOR PATENTS
UNITED STATES PATENT AND TRADEMARK OFFICE
P.O. BOX 1450
ALEXANDRIA, VA 22313-1450
www.uspto.gov

11/17/09

In re Patent No. 5,324,566	:	
Issue Date: June 28, 1994	:	**DECISION GRANTING**
Appl No.: 07/824,287	:	**PETITION**
Filed: January 23, 1992	:	*37 CFR 1.324*
For: Water and Oil Repelling Film Having Surface Irregularities and Method of Manufacturing Same	:	

This is a decision on the petition filed January 4, 2008 to correct inventorship under 37 CFR 1.324.

The petition is granted. NORIHISA MINO has been added as an inventor.

The patented file is being forwarded to Certificate of Corrections Branch for issuance of a certificate naming only the actual inventor or inventors.

David Sample
Supervisory Patent Examiner
Art Unit 1794
Technology Center 1700

Barry Bretschneider
Morrison & Foerster LLP
1650 Tysons Boulevard, Suite 400
McLean, VA 22102

UNITED STATES PATENT AND TRADEMARK OFFICE

COMMISSIONER FOR PATENTS
UNITED STATES PATENT AND TRADEMARK OFFICE
WASHINGTON, D.C. 20231
www.uspto.gov

JJGJr.:11-01

Paper 43

ROBERT MINIER
JOHNSON & JOHNSON
ONE JOHNSON & JOHNSON PLAZA
NEW BRUNSWICK, NJ 08933-7003

COPY MAILED

JAN 2 1 2002

OFFICE OF PETITIONS

COPY MAILED
CANCELLED
OFFICE OF PETITIONS

In re Application of
Xhonneux, et al.
Application No. 07/825,488
Filed: 25 January, 1992
Attorney Docket No. JAB-775

ON PETITION

This is a decision on the petition filed 26 September, 2001, under 37 C.F.R. §1.183,[1] to waive the timing provisions of 37 C.F.R. §§1.129,[2] ¶a, and enter an amendment under

---

[1] The regulations at 37 C.F.R. §1.183 provide:

§1.183. Suspension of the rules.

In an extraordinary situation, when justice requires, any requirement of the regulations in this part which is not a requirement of the statutes may be suspended or waived by the Commissioner or the Commissioner's designee, *sua sponte*, or on petition of the interested party, subject to such other requirements as may be imposed. Any petition under this section must be accompanied by the petition fee set forth in §1.17(h).

[2] The regulations at 37 C.F.R. §1.129 provide:

§ 1.129 Transitional procedures for limited examination after final rejection and restriction practice.
(a) An applicant in an application, other than for reissue or a design patent, that has been pending for at least two years as of June 8, 1995, taking into account any reference made in such application to any earlier filed application under 35 U.S.C. 120, 121 and 365(c), is entitled to have a first submission entered and considered on the merits after final rejection under the following circumstances: The Office will consider such a submission, if the first submission and the fee set forth in §1.17(r) are filed prior to the filing of an appeal brief and prior to abandonment of the application. The finality of the final rejection is automatically withdrawn upon the timely filing of the submission and payment of the fee set forth in §1.17(r). If a subsequent final rejection is made in the application, applicant is entitled to have a second submission entered and considered on the merits after the subsequent final rejection under the following circumstances: The Office will consider such a submission, if the second submission and a second fee set forth in §1.17(r) are filed prior to the filing of an appeal brief and prior to abandonment of the application. The finality of the subsequent final rejection is automatically withdrawn upon the timely filing of the submission and payment of the second fee set forth in §1.17(r). Any submission filed after a final rejection made in an application subsequent to the fee set forth in §1.17(r) having been twice paid will be treated as set forth in §1.116. A submission as used in this paragraph includes, but is not limited to, an information disclosure statement, an amendment to the written description, claims or drawings and a new substantive argument or new evidence in support of patentability.
(b)(1) In an application, other than for reissue or a design patent, that has been pending for at least three years as of June 8, 1995, taking into account any reference made in the application to any earlier filed application under 35 U.S.C. 120, 121 and 365(c), no requirement for restriction or for the filing of divisional applications shall be made or maintained in the application after June 8, 1995, except where:
(i) The requirement was first made in the application or any earlier filed application under 35 U.S.C. 120, 121 and 365(c) prior to April 8, 1995;
(ii) The examiner has not made a requirement for restriction in the present or parent application prior to April 8, 1995, due to actions by the applicant; or
(iii) The required fee for examination of each additional invention was not paid.
(2) If the application contains more than one independent and distinct invention and a requirement for restriction or for the filing of divisional applications cannot be made or maintained pursuant to this paragraph, applicant will be so notified and given a time period to:
(i) Elect the invention or inventions to be searched and examined, if no election has been made prior to the notice, and pay the fee set forth in 1.17(s) for each independent and distinct invention claimed in the application in excess of one which applicant elects;
(ii) Confirm an election made prior to the notice and pay the fee set forth in § 1.17(s) for each independent and distinct invention claimed in the application in addition to the one invention which applicant previously elected; or
(iii) File a petition under this section traversing the requirement. If the required petition is filed in a timely manner, the original time period for electing and paying the fee set forth in § 1.17(s) will be deferred and any decision on the petition affirming or modifying the requirement will set a new time period to elect the invention or inventions to be searched and examined and to pay the fee set forth in § 1.17(s) for each independent and distinct invention claimed in the application in excess of one which applicant elects.
(3) The additional inventions for which the required fee has not been paid will be withdrawn from consideration under § 1.142(b). An applicant who desires examination of an invention so withdrawn from consideration can file a divisional application under 35 U.S.C. 121.
(c) The provisions of this section shall not be applicable to any application filed after June 8, 1995.
[Added, 60 Fed. Reg. 20195, Apr. 25, 1995, effective June 8, 1995]

the transitional rules of practice. As is discussed herein, this matter is one more properly considered under the provisions of 37 C.F.R. §1.198[3] to facilitate consideration filing and consideration of the Information Disclosure Statement under 37 C.F.R. §1.98[4] and amendment reflective of due diligence under that rule.

The petition under 37 C.F.R. §1.198 is **GRANTED** and the petition under 37 C.F.R. §1.183 is **DISMISSED as premature**.

BACKGROUND

The record indicates that:

- the instant application (the '488 Application), filed on 24 January, 1992, with specification including 17 claims and abstract, is a continuation of Application No. 07/325,181 (the '181 Application), filed 16 March, 1989, which is a continuation of Application No. 07/172,747 (the '747 Application) filed 23 March, 1988;

The record further indicates that prosecution has been involved, specifically:

- upon filing the '488 application, Petitioner included a "Preliminary Amendment and Information Disclosure," canceling Claim 1 and adding Claims 18 through 24;
- a first action rejection mailed on 29 May, 1992, was followed by:

  --a second amendment, canceling Claims 18 and 19 and adding Claims 25 and

---

[3] The regulations at 37 C.F.R. §1.198 provide:
§ 1.198 Reopening after decision.
Cases which have been decided by the Board of Patent Appeals and Interferences will not be reopened or reconsidered by the primary examiner except under the provisions of § 1.114 or § 1.196 without the written authority of the Commissioner, and then only for the consideration of matters not already adjudicated, sufficient cause being shown.
[49 Fed. Reg. 48416, Dec. 12, 1984, effective date Feb. 11, 1985; revised, 65 FED. REG. 14865, Mar. 20, 2000, effective May 29, 2000 (adopted as final, 65 FED. REG. 50092, Aug. 16, 2000)]

[4] The regulations at at 37 C.F.R. §1.98 provide, in pertinent part:
§ 1.97 Filing of information disclosure statement.
(a) In order for an applicant for a patent or for a reissue of a patent to have an information disclosure statement in compliance with § 1.98 considered by the Office during the pendency of the application, the information disclosure statement must satisfy one of paragraphs (b), (c), or (d) of this section.
(b) An information disclosure statement shall be considered by the Office if filed by the applicant within any one of the following time periods:
(1) Within three months of the filing date of a national application other than a continued prosecution application under § 1.53(d);
(2) Within three months of the date of entry of the national stage as set forth in § 1.491 in an international application;
(3) Before the mailing of a first Office action on the merits; or
(4) Before the mailing of a first Office action after the filing of a request for continued examination under § 1.114.
(c) An information disclosure statement shall be considered by the Office if filed after the period specified in paragraph (b) of this section, provided that the information disclosure statement is filed before the mailing date of any of a final action under § 1.113, a notice of allowance under § 1.311, or an action that otherwise closes prosecution in the application, and it is accompanied by one of:
(1) The statement specified in paragraph (e) of this section; or
(2) The fee set forth in § 1.17(p).
(d) An information disclosure statement shall be considered by the Office if filed by the applicant after the period specified in paragraph (c) of this section, provided that the information disclosure statement is filed on or before payment of the issue fee and is accompanied by:
(1) The statement specified in paragraph (e) of this section; and
(2) The fee set forth in § 1.17(p).

* * *

26, was filed on 31 August, 1992, and

--a second non-final rejection mailed on 10 November, 1992;

--a request for reconsideration (styled as "Response" to the 10 November Office action) filed with a one- (1-) month extension of time on 22 February, 1993

--a third non-final rejection mailed on 14 May, 1993;

--a second request for reconsideration (styled as "Response" to the 14 May Office action) filed with a one- (1-) month extension of time on 30 August, 1993;

- a final rejection was mailed on 15 February, 1994, and was followed by:

  --an interview on 4 May, 1994;

  --a request for reconsideration styled as "Response Under 37 C.F.R. §1.116" filed on 6 July, 1994, with an extension of time;

- an Advisory Action mailed on 26 July, 1994, holding that "the rejection [of 15 February must stand";
- Petitioner filed a Notice of Appeal, with fee, request for oral argument and extension of time, on 8 August, 1994, and timely submitted the Appeal Brief on 11 October, 1994, specifying that 20 through 26 were at issue, with Claims 1 through 19 having been canceled;
- the Examiner's Answer was mailed on 7 February, 1995;
- Petitioner filed a "Reply Brief and Request for Clarification" on 20 March, 1995;
- the Supplemental Examiner's Answer was mailed on 14 June, 1995;
- Petitioner filed a "Reply Brief to Supplemental Examiner's Answer" on 17 July, 1995;
- a second Supplemental Examiner's Answer mailed on 23 October, 1995;
- Petitioner filed a Status Inquiry on 2 March, 1998, to which a reply was mailed--indicating that assignment of a hearing date was pending, on 13 April, 1998;
- Petitioner filed a Petition to Make Special on 17 June, 1999, which was granted on 12 July, and the Notice of Hearing--with an 18 October, 1999, hearing date--was mailed on 11 August, 1999;
- on 6 October, 1999, Petitioner requested postponement of the hearing, citing the retirement and unavailability of its former counsel in the weeks of 11 October or 25 October, 1999;
- the request for postponement was mailed on 8 October, 1999, and the Notice of Hearing (rescheduling the hearing for 13 January, 2000) was mailed on 26 November, 1999;

- during Oral Argument Petitioner's Counsel withdrew the appeal as to (and thus canceled) Claim 20, and subsequently took the same action same as to Claim 23 (which depended from Claim 20) via telephone on 16 February, 2000;[5]

- on 14 March, 2000, the Board of Patent Appeals and Interferences (BPAI or the Board):

  --dismissed the appeal as to Claims 20 and 23 (which left Claims 21, 22, 24, 25 and 26 pending);

  --reversed the rejection under 35 U.S.C. §103 as to Claims 21, 22, 24, 25 and 26;

  --considered expressly withdrawn the Examiner's rejection of the pending claims under 35 U.S.C. §102 (a) and (b);

  --instructed the Examiner to consider the Claims 21, 22, 24, 25 and 26 in light of In re Schaumann[6] and In re May[7] analyses under 35 U.S.C. §102 (a) and (b);

- there has been no action on the record by the Examiner in light of the instruction by the BPAI;

- save for Petitioner's statement in the instant petition that the file "was misplaced" by the Office, there is no indication of any further transactions on the record until 23 July, 2001, at which time Petitioner filed an Amendment (with a Declaration under 37 C.F.R. §1.132):[8]

  --canceling Claims 20, 23, 25 and 26,

  --amending Claims 21 and 22, and

  --adding new Claims 27 through 29,

  which Amendment has yet to be entered or otherwise acted upon by the Examiner;

- Petitioners then filed the instant petition on 26 September, 2001.

STATUTES, REGULATIONS, ANALYSIS

Congress has provided at 35 U.S.C. §(6)(a), in pertinent part, that:

---

[5] See: Decision, BPAI, 14 May, 2000, at p. 3.

[6] 572 F.2d 312, at 315, 197 USPQ 5 , at 8 (CCPA 1978).

[7] 574 F.2d 1082, at 1090, 197 USPQ 601 , at 607 (CCPA 1978).

[8] The instant petition refers (at p. 3) to an interview, however, the record does not contain an interview summary prepared by the Examiner and, in its absence there is no indication that the Examiner relieved the Petitioner of the responsibility for preparing and filing such a summary.

> The Commissioner . . . may, subject to the approval of the Secretary of Commerce, establish regulations, not inconsistent with law, for the conduct of proceedings in the Patent and Trademark Office.

Amendment after final or on appeal is not of right, save as to form.[9] Amendment after action by the Board is controlled by 37 C.F.R. §1.196[10]

The regulations at 37 C.F.R. §1.183 provide that "[i]n an extraordinary situation, when justice requires," the Office may waive regulatory--but not statutory--requirements.

While the Examiner withdrew the §103 rejections and the Board reversed the Examiner's §102 (a) and (b) rejections, the Board did not order entry of the claims on appeal and in fact directed the Examiner to consider the claims in light of Schaumann and May.

---

[9] The regulations at 37 C.F.R. §1.116 provide, in pertinent part:

§ 1.116 Amendments after final action or appeal.

* * *

(d) No amendment can be made as a matter of right in appealed cases. After decision on appeal, amendments can only be made as provided in §§ 1.198 and 1.981, or to carry into effect a recommendation under § 1.196 or § 1.977.

* * *

[10] The regulations at 37 C.F.R. §1.196 provide:

§ 1.196 Decision by the Board of Patent Appeals and Interferences.

(a) The Board of Patent Appeals and Interferences, in its decision, may affirm or reverse the decision of the examiner in whole or in part on the grounds and on the claims specified by the examiner or remand the application to the examiner for further consideration. The affirmance of the rejection of a claim on any of the grounds specified constitutes a general affirmance of the decision of the examiner on that claim, except as to any ground specifically reversed.

(b) Should the Board of Patent Appeals and Interferences have knowledge of any grounds not involved in the appeal for rejecting any pending claim, it may include in the decision a statement to that effect with its reasons for so holding, which statement constitutes a new ground of rejection of the claim. A new ground of rejection shall not be considered final for purposes of judicial review. When the Board of Patent Appeals and Interferences makes a new ground of rejection, the appellant, within two months from the date of the decision, must exercise one of the following two options with respect to the new ground of rejection to avoid termination of proceedings (§ 1.197(c)) as to the rejected claims:

(1) Submit an appropriate amendment of the claims so rejected or a showing of facts relating to the claims so rejected, or both, and have the matter reconsidered by the examiner, in which event the application will be remanded to the examiner. The new ground of rejection is binding upon the examiner unless an amendment or showing of facts not previously of record be made which, in the opinion of the examiner, overcomes the new ground of rejection stated in the decision. Should the examiner reject the claims, appellant may again appeal pursuant to §§ 1.191 through 1.195 to the Board of Patent Appeals and Interferences.

(2) Request that the application be reheard under § 1.197(b) by the Board of Patent Appeals and Interferences upon the same record. The request for rehearing must address the new ground of rejection and state with particularity the points believed to have been misapprehended or overlooked in rendering the decision and also state all other grounds upon which rehearing is sought. Where request for such rehearing is made, the Board of Patent Appeals and Interferences shall rehear the new ground of rejection and, if necessary, render a new decision which shall include all grounds of rejection upon which a patent is refused. The decision on rehearing is deemed to incorporate the earlier decision for purposes of appeal, except for those portions specifically withdrawn on rehearing, and is final for the purpose of judicial review, except when noted otherwise in the decision.

(c) Should the decision of the Board of Patent Appeals and Interferences include an explicit statement that a claim may be allowed in amended form, appellant shall have the right to amend in conformity with such statement which shall be binding on the examiner in the absence of new references or grounds of rejection.

(d) The Board of Patent Appeals and Interferences may require appellant to address any matter that is deemed appropriate for a reasoned decision on the pending appeal. Appellant will be given a non-extendable time period within which to respond to such a requirement.

(e) Whenever a decision of the Board of Patent Appeals and Interferences includes or allows a remand, that decision shall not be considered a final decision. When appropriate, upon conclusion of proceedings on remand before the examiner, the Board of Patent Appeals and Interferences may enter an order otherwise making its decision final.

(f) See § 1.136(b) for extensions of time to take action under this section in a patent application and § 1.550(c) for extensions of time in a reexamination proceeding.

[24 Fed. Reg. 10332, Dec. 12, 1959; 49 Fed. Reg. 29183, May 29, 1981; 49 Fed. Reg. 48416, Dec. 12, 1984, effective Feb. 12, 1985; para. (b) revised, 53 Fed. Reg. 23735, June 23, 1988, effective Sept. 12, 1988; paras. (a), (b) & (d) amended, paras. (e) & (f) added, 54 Fed. Reg. 29552, July 13, 1989, effective Aug. 20, 1989; para. (f) revised, 58 Fed. Reg. 54504, Oct. 22, 1993, effective Jan. 3, 1994; paras. (b) & (d) revised, 62 Fed. Reg. 53131, Oct. 10, 1997, effective Dec. 1, 1997]

Therefore, neither is the Petitioner authorized to amend to comport with the decision nor the Examiner compelled per se to allow the claims.[11]

Moreover, in the absence of an action by the Examiner, no rejection--much less final rejection--stands against the claims now pending, and the provisions of 37 C.F.R. §1.129 do not apply until such time as the claims are finally rejected.

Nonetheless, Petitioner is compelled to satisfy its duty of disclosure pursuant to 37 C.F.R. §§1.97 and 1.98.

Therefore, while relief is premature under 37 C.F.R. §1.183--and Petitioner's election to file a (supplemental) Reply Brief on 17 July, 1995, may in fact be considered Petitioner's election to forego future prosecution pursuant to 37 C.F.R. §1.129(a)[12]--relief is proper under 37 C.F.R. §1.198.

CONCLUSION

While the circumstances of this matter do not allow treatment under 37 C.F.R. §1.129, and therefore make inappropriate consideration under 37 C.F.R. §1.183, consideration in light of the provisions of 37 C.F.R. §1.198 is proper.

Accordingly, the instant petition as treated under 37 C.F.R. §1.198 is **GRANTED**, and the petition under 37 C.F.R. §1.183 is **dismissed as premature**.[13]

This application file is being returned to Technology Center 1600 for further processing.

Telephone inquiries regarding this decision should be directed to John J. Gillon, Attorney, Office of Petitions, at (703) 305-9199.

for Brian Hearn

Beverly M. Flanagan
Supervisory Petitions Examiner
Office of Petitions
Office of the Deputy Commissioner
for Patent Examination Policy

---

[11] Delay resulting from the inadvertence or mistake of an applicant or an applicant's representative does not warrant equitable relief. And equitable powers are not to be invoked to excuse the performance of a party not acting with reasonable due care and diligence. U.S. v. Lockheed Petroleum Services, 709 F.2d 1472, 1475 (Fed. Cir. 1983); Smith v. Mossinghoff, 671 F.2d 533, 538, 213 USPQ 877, 982 (D.C.Cir. 1982).

[12] Circumstances resulting from Petitioners's failure to exercise due care, or lack of knowledge of, or failure to properly apply, the patent statutes or rules of practice are not in any event extraordinary circumstances where the interests of justice require the granting of relief. See: In re Tetrafluor, Inc., 17 USPQ2d 1160, 1162 (Comm'r Pats. 1997): In re Bird & Son, Inc., 195 USPQ 586, 588 (Comm'r Pat, 1977); Huston v. Ladner, 973 F.2d 1564, 23 USPQ2d 1910 (Fed Cir. 1992).

[13] Should a final rejection result in this matter, Petitioner may wish to renew at that time the petition under 37 C.F.R. §1.183.

UNITED STATES PATENT AND TRADEMARK OFFICE

Commissioner for Patents
United States Patent and Trademark Office
P.O. Box 1450
Alexandria, VA 22313-1450
www.uspto.gov

HOLME ROBERTS & OWEN, LLP
299 SOUTH MAIN
SUITE 1800
SALT LAKE CITY UT 84111

COPY MAILED

DEC 10 2007

OFFICE OF PETITIONS

In re Application of	:	
Carey et al.	:	
Application No. 07/826083	:	
Filing or 371(c) Date: 01/27/1992	:	ON PETITION
Patent Number: 5214804	:	
Issue Date: 06/01/1993	:	
Title of Invention:	:	
PROTECTIVE MASK WITH SCARF	:	

This is a decision on the "Petition Requesting Expedited Decision," October 2, 2007, requesting expedited treatment of a petition requesting a duplicate Letters Patent.

This Petition is hereby **granted**.

A Decision on the Petition under 37 CFR 1.182 requesting a duplicate Letters Patent is being mailed on even date herewith.

Telephone inquiries concerning this matter should be directed to the undersigned at (571) 272-3232.

Derek L. Woods
Attorney
Office of Petitions

UNITED STATES PATENT AND TRADEMARK OFFICE

Commissioner for Patents
United States Patent and Trademark Office
P.O. Box 1450
Alexandria, VA 22313-1450
www.uspto.gov

HOLME ROBERTS & OWEN, LLP
299 SOUTH MAIN
SUITE 1800
SALT LAKE CITY UT 84111

COPY MAILED

DEC 1 0 2007

OFFICE OF PETITIONS

In re Application of	:	
Carey et al.	:	
Application No. 07/826083	:	
Filing or 371(c) Date: 01/27/1992	:	ON PETITION
Patent Number: 5214804	:	
Issue Date: 06/01/1993	:	
Title of Invention:	:	
PROTECTIVE MASK WITH SCARF	:	

This is a decision on the Petition Requesting Duplicate Letters Patent, filed October 2, 2007. The petition is properly treated under 37 CFR 1.182.

The petition is **GRANTED**.

The Publishing Division is directed to issue a duplicate Letters Patent.

The $400 fee for the petition under 37 CFR 1.182 has been assessed to petitioner's deposit account.

Questions concerning this decision may be directed to the undersigned at 571-232-3232. Inquiries regarding the issuance of a duplicate Letters Patent may be directed to Krystal Paige in the Publishing Division at (703) 308-9250, Ext. 139.

A copy of this decision is being faxed to Publishing Division for issuance of a duplicate Letters Patent.

Derek L. Woods
Attorney
Office of Petitions

CC: Krystal Paige
South Tower 8th floor, Room C-32 (FAX 571-270-9937)

UNITED STATES PATENT AND TRADEMARK OFFICE

Commissioner for Patents
United States Patent and Trademark Office
P.O. Box 1450
Alexandria, VA 22313-1450
www.uspto.gov

FOX ROTHSCHILD LLP
P O BOX 592
112 NASSAU STREET
PRINCETON, NJ 08542-0592

MAILED

NOV 1 3 2009

OFFICE OF PETITIONS

In re Patent No. 5,264,933	:	
Issue Date: November 23, 1993	:	
Application No. 07/826,754	:	NOTICE
Filed: January 28, 1992	:	
Attorney Docket No. PEB-1US	:	

This is a notice regarding your request for acceptance of a fee deficiency submission under 37 CFR 1.28. On September 1, 1998, the Court of Appeals for the Federal Circuit held that 37 CFR 1.28(c) is the sole provision governing the time for correction of the erroneous payment of the issue fee as a small entity. **See DH Technology v. Synergystex International, Inc. 154 F.3d 1333, 47 USPQ2d 1865 (Fed. Cir. Sept. 1, 1998).**

The Office no longer investigates or rejects original or reissue applications under 37 CFR 1.56. **1098 Off. Gaz. Pat. Office 502 (January 3, 1989)**. Therefore, nothing in this Notice is intended to imply that an investigation was done.

Your fee deficiency submission under 37 CFR 1.28 is hereby **ACCEPTED**.

This application is no longer entitled to small entity status. Accordingly, all future fees paid in this application must be paid at the large entity rate.

Telephone inquiries related to this communication should be directed to April M. Wise at (571) 272-1642.

/Carl Friedman/
Carl Friedman
Petitions Examiner
Office of Petitions

Under the Paperwork Reduction Act of 1995, no persons are required to respond to a collection of information unless it displays valid OMB control number.

PETITION TO ACCEPT UNINTENTIONALLY DELAYED PAYMENT OF MAINTENANCE FEE IN AN EXPIRED PATENT (37 CFR 1.378(c))

Patent Number	Issue Date (YYYY-MM-DD)	Application Number	Filing Date (YYYY-MM-DD)	Docket Number (if applicable)
5276537	1994-01-04	07828363	1992-01-30	100.055

CAUTION: Maintenance fee (and surcharge, if any) payment must correctly identify: (1) the patent number and (2) the application number of the actual U.S. application leading to issuance of that patent to ensure the fee(s) is/are associated with the correct patent. 37 CFR 1.366(c) and (d).

SMALL ENTITY
☒ Patentee claims, or has previously claimed, small entity status. See 37 CFR 1.27.

LOSS OF ENTITLEMENT TO SMALL ENTITY STATUS
☐ Patentee is no longer entitled to small entity status. See 37 CFR 1.27(g)

NOT Small Entity			Small Entity		
	Fee	Code		Fee	Code
○	3 ½ year	(1551)	○	3 ½ year	(2551)
○	7 ½ year	(1552)	○	7 ½ year	(2552)
○	11 ½ year	(1553)	◉	11 ½ year	(2553)

SURCHARGE
The surcharge required by 37 CFR 1.20(i)(2) (Fee Code 1558) must be paid as a condition of accepting unintentionally delayed payment of the maintenance fee.

MAINTENANCE FEE (37 CFR 1.20(e)-(g))
The appropriate maintenance fee must be submitted with this petition.

STATEMENT
THE UNDERSIGNED CERTIFIES THAT THE DELAY IN PAYMENT OF THE MAINTENANCE FEE TO THIS PATENT WAS UNINTENTIONAL

PETITIONER(S) REQUEST THAT THE DELAYED PAYMENT OF THE MAINTENANCE FEE BE ACCEPTED AND THE PATENT REINSTATED

THIS PORTION MUST BE COMPLETED BY THE SIGNATORY OR SIGNATORIES

37 CFR 1.378(d) states: "Any petition under this section must be signed by an attorney or agent registered to practice before the Patent and Trademark Office, or by the patentee, the assignee, or other party in interest."

I certify, in accordance with 37 CFR 1.4(d)(4) that I am

◉ An attorney or agent registered to practice before the Patent and Trademark Office

○ A sole patentee

○ A joint patentee; I certify that I am authorized to sign this submission on behalf of all the other patentees.

○ A joint patentee; all of whom are signing this e-petition

○ The assignee of record of the entire interest

Patent Practitioner			
A signature of the applicant or representative is required in accordance with 37 CFR 1.33 and 10.18. Please see 37 CFR 1.4(d) for the form of the signature			
Signature	/Leonard Tachner/	Date (YYYY-MM-DD)	2007-10-04
Name	Leonard Tachner	Registration Number	26344

This collection of information is required by 37 CFR 1.378(c). The information is required to obtain or retain a benefit by the public which is to file (and by the USPTO to process) an application. Confidentiality is governed by 35 U.S.C. 122 and 37 CFR 1.11 and 1.14. This collection is estimated to take 1 hour to complete, including gathering, preparing, and submitting the completed application form to the USPTO. Time will vary depending upon the individual case. Any comments on the amount of time you require to complete this form and/ or suggestions for reducing this burden, should be sent to the Chief Information Officer, U.S. Patent and Trademark Office, U.S. Department of Commerce, P.O. Box 1450, Alexandria, VA 22313-1450. DO NOT SEND FEES OR COMPLETED FORMS TO THIS ADDRESS. **This form can only be used when in conjunction with EFS-Web. If this form is mailed to the USPTO, it may cause delays in reinstating the patent.**

Privacy Act Statement

The Privacy Act of 1974 (P.L. 93-579) requires that you be given certain information in connection with your submission of the attached form related to a patent application or patent. Accordingly, pursuant to the requirements of the Act, please be advised that: (1) the general authority for the collection of this information is 35 U.S.C. 2(b)(2); (2) furnishing of the information solicited is voluntary; and (3) the principal purpose for which the information is used by the U.S. Patent and Trademark Office is to process and/or examine your submission related to a patent application or patent. If you do not furnish the requested information, the U.S. Patent and Trademark Office may not be able to process and/or examine your submission, which may result in termination of proceedings or abandonment of the application or expiration of the patent.

The information provided by you in this form will be subject to the following routine uses:

1. The information on this form will be treated confidentially to the extent allowed under the Freedom of Information Act (5 U.S.C. 552) and the Privacy Act (5 U.S.C. 552a). Records from this system of records may be disclosed to the Department of Justice to determine whether the Freedom of Information Act requires disclosure of these record s.

2. A record from this system of records may be disclosed, as a routine use, in the course of presenting evidence to a court, magistrate, or administrative tribunal, including disclosures to opposing counsel in the course of settlement negotiations.

3. A record in this system of records may be disclosed, as a routine use, to a Member of Congress submitting a request involving an individual, to whom the record pertains, when the individual has requested assistance from the Member with respect to the subject matter of the record.

4. A record in this system of records may be disclosed, as a routine use, to a contractor of the Agency having need for the information in order to perform a contract. Recipients of information shall be required to comply with the requirements of the Privacy Act of 1974, as amended, pursuant to 5 U.S.C. 552a(m).

5. A record related to an International Application filed under the Patent Cooperation Treaty in this system of records may be disclosed, as a routine use, to the International Bureau of the World Intellectual Property Organization, pursuant to the Patent Cooperation Treaty.

6. A record in this system of records may be disclosed, as a routine use, to another federal agency for purposes of National Security review (35 U.S.C. 181) and for review pursuant to the Atomic Energy Act (42 U.S.C. 218(c)).

7. A record from this system of records may be disclosed, as a routine use, to the Administrator, General Services, or his/her designee, during an inspection of records conducted by GSA as part of that agency's responsibility to recommend improvements in records management practices and programs, under authority of 44 U.S.C. 2904 and 2906. Such disclosure shall be made in accordance with the GSA regulations governing inspection of records for this purpose, and any other relevant (i.e., GSA or Commerce) directive. Such disclosure shall not be used to make determinations about individuals.

8. A record from this system of records may be disclosed, as a routine use, to the public after either publication of the application pursuant to 35 U.S.C. 122(b) or issuance of a patent pursuant to 35 U.S.C. 151. Further, a record may be disclosed, subject to the limitations of 37 CFR 1.14, as a routine use, to the public if the record was filed in an application which became abandoned or in which the proceedings were terminated and which application is referenced by either a published application, an application open to public inspections or an issued patent.

9. A record from this system of records may be disclosed, as a routine use, to a Federal, State, or local law enforcement agency, if the USPTO becomes aware of a violation or potential violation of law or regulation.

UNITED STATES PATENT AND TRADEMARK OFFICE

Commissioner for Patents
United States Patent and Trademark Office
P.O. Box 1450
Alexandria, VA 22313-1450
www.uspto.gov

In re Patent No. 5276537
Issue Date: January 4,1994
Application No. 07828363
Filed: January 30,1992
Attorney Docket No.

:

:DECISION GRANTING PETITION
:UNDER 37 CFR 1.378(c)

:

This is a decision on the electronic petition, filed October 4,2007 ,under 37 CFR 1.378(c) to accept the unintentionally delayed payment of the 11.5 year maintenance fee for the above-identified patent.

The petition is GRANTED.

The maintenance fee is accepted, and the above-identified patent reinstated as of October 4,2007 . This decision also constitutes notice that the fee has been accepted. An electronic copy of the petition and this decision has been created as an entry in an Image File Wrapper. Nevertheless, petitioner should print and retain an independent copy

Telephone inquires related to this electronic decision should be directed to the Electronic Business Center at 1-866-217-9197.

UNITED STATES PATENT AND TRADEMARK OFFICE

Commissioner for Patents
United States Patent and Trademark Office
P.O. Box 1450
Alexandria, VA22313-1450
www.uspto.gov

Paper 19

HERSHKOVITZ & ASSOCIATES
2845 DUKE STREET
ALEXANDRIA VA 22314

COPY MAILED

AUG 1 0 2007

OFFICE OF PETITIONS

In re Patent No. 5,279,051 :
Issue Date: January 18, 1994 :
Application No. 07/829,470 : ON PETITION
Filed: January 31, 1992 :
Attorney Docket Number: P67340 :

This is a decision on the petition, filed June 11, 2007, under 37 CFR 1.182, requesting the issuance of a duplicate Letters Patent for the above-identified application.

The petition is **GRANTED**.

Since it is U.S. Patent and Trademark Office practice to assure mailing of all papers on the date indicated, there is a strong presumption that papers duly addressed and indicated as mailed, such as the Letters Patent in this application, are timely delivered to the addressee. To overcome this presumption, a verified statement with supporting evidence, such as any records which would disclose the receipt of other correspondence mailed from the U.S. Patent and Trademark Office on or about January 18, 1994, but fail to disclose receipt of the Letters Patent mailed on that date, should be promptly submitted. Further, copies of records on which receipt of the Letters Patent would have been entered had it been received are required.

However, if the loss of the Letters Patent was not the fault of the U.S. Patent and Trademark Office or if petitioner simply wishes to avoid overcoming the above-noted presumption, a petition may be filed under 37 CFR 1.182 accompanied by a petition fee of $400.00 requesting a duplicate Letters Patent. Upon receipt of the petition and petition fee, the request for a duplicate Letters Patent will be granted.

Petitioners state that the Letters Patent was received from the USPTO and was subsequently lost. The petition fee in the amount of $400.00 has been applied.

A copy of this decision is being forwarded to Publishing Division for issuance of a duplicate Letters Patent.

The Publishing Division is directed to issue a duplicate Letters Patent.

Telephone inquiries concerning this decision may be directed to the undersigned Senior Petitions Attorney at (571) 272-3212. Inquiries regarding the issuance of a duplicate Letters Patent may be directed to the Publishing Division at (703) 308-9250.

Patricia Faison-Ball

Patricia Faison-Ball
Senior Petitions Attorney
Office of Petitions

cc: Krystal Paige, South Tower, 8th Floor (Fax – (571) 270-9937)

UNITED STATES PATENT AND TRADEMARK OFFICE

COMMISSIONER FOR PATENTS
UNITED STATES PATENT AND TRADEMARK OFFICE
P.O. BOX 1450
ALEXANDRIA, VA 22313-1450
www.uspto.gov

OLE K. NILSSEN
200 N HARRISON STREET
SUITE 103
ALGONQUIN, IL 60102

COPY MAILED
MAR 0 9 2006
OFFICE OF PETITIONS

In re Patent No. 5,180,952	:	
Issue Date: January 19, 1993	:	
Application No. 07/831,086	:	NOTICE
Filed: February 7, 1992	:	
Attorney Docket No. N/A	:	

This is a notice regarding your request for acceptance of a fee deficiency submission under 37 CFR 1.28, filed January 27, 2006. On September 1, 1998, the Court of Appeals for the Federal Circuit held that 37 CFR 1.28(c) is the sole provision governing the time for correction of the erroneous payment of the issue fee as a small entity. **See DH Technology v. Synergystex International, Inc. 154 F.3d 1333, 47 USPQ2d 1865 (Fed. Cir. Sept. 1, 1998).**

The Office no longer investigates or rejects original or reissue applications under 37 CFR 1.56. **1098 Off. Gaz. Pat. Office 502 (January 3, 1989)**. Therefore, nothing in this Notice is intended to imply that an investigation was done.

Your fee deficiency submission under 37 CFR 1.28 is hereby **ACCEPTED**.

Inquiries related to this communication should be directed to the undersigned at (571) 272-3226.

Andrea Smith
Petitions Examiner
Office of Petitions

Under the Paperwork Reduction Act of 1995, no persons are required to respond to a collection of information unless it displays valid OMB control number.

PETITION TO ACCEPT UNINTENTIONALLY DELAYED PAYMENT OF MAINTENANCE FEE IN AN EXPIRED PATENT (37 CFR 1.378(c))

Patent Number	Issue Date (YYYY-MM-DD)	Application Number	Filing Date (YYYY-MM-DD)	Docket Number (if applicable)
5,345,562	1994-09-06	07/836,060	1992-02-12	112.P91089

CAUTION: Maintenance fee (and surcharge, if any) payment must correctly identify: (1) the patent number and (2) the application number of the actual U.S. application leading to issuance of that patent to ensure the fee(s) is/are associated with the correct patent. 37 CFR 1.366(c) and (d).

SMALL ENTITY
☐ Patentee claims, or has previously claimed, small entity status. See 37 CFR 1.27.

LOSS OF ENTITLEMENT TO SMALL ENTITY STATUS
☒ Patentee is no longer entitled to small entity status. See 37 CFR 1.27(g)

NOT Small Entity		Small Entity	
Fee	Code	Fee	Code
○ 3 ½ year	(1551)	○ 3 ½ year	(2551)
○ 7 ½ year	(1552)	○ 7 ½ year	(2552)
◉ 11 ½ year	(1553)	○ 11 ½ year	(2553)

SURCHARGE
The surcharge required by 37 CFR 1.20(i)(2) (Fee Code 1558) must be paid as a condition of accepting unintentionally delayed payment of the maintenance fee.

MAINTENANCE FEE (37 CFR 1.20(e)-(g))
The appropriate maintenance fee must be submitted with this petition.

STATEMENT
THE UNDERSIGNED CERTIFIES THAT THE DELAY IN PAYMENT OF THE MAINTENANCE FEE TO THIS PATENT WAS UNINTENTIONAL

PETITIONER(S) REQUEST THAT THE DELAYED PAYMENT OF THE MAINTENANCE FEE BE ACCEPTED AND THE PATENT REINSTATED

THIS PORTION MUST BE COMPLETED BY THE SIGNATORY OR SIGNATORIES

37 CFR 1.378(d) states: "Any petition under this section must be signed by an attorney or agent registered to practice before the Patent and Trademark Office, or by the patentee, the assignee, or other party in interest."

I certify, in accordance with 37 CFR 1.4(d)(4) that I am

◉ An attorney or agent registered to practice before the Patent and Trademark Office

○ A sole patentee

○ A joint patentee; I certify that I am authorized to sign this submission on behalf of all the other patentees.

○ A joint patentee; all of whom are signing this e-petition

○ The assignee of record of the entire interest

Under the Paperwork Reduction Act of 1995, no persons are required to respond to a collection of information unless it displays valid OMB control number.

Patent Practitioner			
A signature of the applicant or representative is required in accordance with 37 CFR 1.33 and 10.18. Please see 37 CFR 1.4(d) for the form of the signature			
Signature	/Calvin E. Wells Reg. No.43,256/	Date (YYYY-MM-DD)	2007-03-30
Name	Calvin E. Wells	Registration Number	43256

This collection of information is required by 37 CFR 1.378(c). The information is required to obtain or retain a benefit by the public which is to file (and by the USPTO to process) an application. Confidentiality is governed by 35 U.S.C. 122 and 37 CFR 1.11 and 1.14. This collection is estimated to take 1 hour to complete, including gathering, preparing, and submitting the completed application form to the USPTO. Time will vary depending upon the individual case. Any comments on the amount of time you require to complete this form and/ or suggestions for reducing this burden, should be sent to the Chief Information Officer, U.S. Patent and Trademark Office, U.S. Department of Commerce, P.O. Box 1450, Alexandria, VA 22313-1450. DO NOT SEND FEES OR COMPLETED FORMS TO THIS ADDRESS. **This form can only be used when in conjunction with EFS-Web. If this form is mailed to the USPTO, it may cause delays in reinstating the patent.**

Privacy Act Statement

The Privacy Act of 1974 (P.L. 93-579) requires that you be given certain information in connection with your submission of the attached form related to a patent application or patent. Accordingly, pursuant to the requirements of the Act, please be advised that: (1) the general authority for the collection of this information is 35 U.S.C. 2(b)(2); (2) furnishing of the information solicited is voluntary; and (3) the principal purpose for which the information is used by the U.S. Patent and Trademark Office is to process and/or examine your submission related to a patent application or patent. If you do not furnish the requested information, the U.S. Patent and Trademark Office may not be able to process and/or examine your submission, which may result in termination of proceedings or abandonment of the application or expiration of the patent.

The information provided by you in this form will be subject to the following routine uses:

1. The information on this form will be treated confidentially to the extent allowed under the Freedom of Information Act (5 U.S.C. 552) and the Privacy Act (5 U.S.C. 552a). Records from this system of records may be disclosed to the Department of Justice to determine whether the Freedom of Information Act requires disclosure of these record s.

2. A record from this system of records may be disclosed, as a routine use, in the course of presenting evidence to a court, magistrate, or administrative tribunal, including disclosures to opposing counsel in the course of settlement negotiations.

3. A record in this system of records may be disclosed, as a routine use, to a Member of Congress submitting a request involving an individual, to whom the record pertains, when the individual has requested assistance from the Member with respect to the subject matter of the record.

4. A record in this system of records may be disclosed, as a routine use, to a contractor of the Agency having need for the information in order to perform a contract. Recipients of information shall be required to comply with the requirements of the Privacy Act of 1974, as amended, pursuant to 5 U.S.C. 552a(m).

5. A record related to an International Application filed under the Patent Cooperation Treaty in this system of records may be disclosed, as a routine use, to the International Bureau of the World Intellectual Property Organization, pursuant to the Patent Cooperation Treaty.

6. A record in this system of records may be disclosed, as a routine use, to another federal agency for purposes of National Security review (35 U.S.C. 181) and for review pursuant to the Atomic Energy Act (42 U.S.C. 218(c)).

7. A record from this system of records may be disclosed, as a routine use, to the Administrator, General Services, or his/her designee, during an inspection of records conducted by GSA as part of that agency's responsibility to recommend improvements in records management practices and programs, under authority of 44 U.S.C. 2904 and 2906. Such disclosure shall be made in accordance with the GSA regulations governing inspection of records for this purpose, and any other relevant (i.e., GSA or Commerce) directive. Such disclosure shall not be used to make determinations about individuals.

8. A record from this system of records may be disclosed, as a routine use, to the public after either publication of the application pursuant to 35 U.S.C. 122(b) or issuance of a patent pursuant to 35 U.S.C. 151. Further, a record may be disclosed, subject to the limitations of 37 CFR 1.14, as a routine use, to the public if the record was filed in an application which became abandoned or in which the proceedings were terminated and which application is referenced by either a published application, an application open to public inspections or an issued patent.

9. A record from this system of records may be disclosed, as a routine use, to a Federal, State, or local law enforcement agency, if the USPTO becomes aware of a violation or potential violation of law or regulation.

UNITED STATES PATENT AND TRADEMARK OFFICE

Commissioner for Patents
United States Patent and Trademark Office
P.O. Box 1450
Alexandria, VA 22313-1450
www.uspto.gov

In re Patent No. 5345562
Issue Date: September 6,1994
Application No. 07836060
Filed: February 12,1992
Attorney Docket No. CCL-28

:
:DECISION GRANTING PETITION
:UNDER 37 CFR 1.378(c)
:

This is a decision on the electronic petition, filed March 30,2007 ,under 37 CFR 1.378(c) to accept the unintentionally delayed payment of the 11.5 year maintenance fee for the above-identified patent.

The petition is GRANTED.

The maintenance fee is accepted, and the above-identified patent reinstated as of March 30,2007 . This decision also constitutes notice that the fee has been accepted. An electronic copy of the petition and this decision has been created as an entry in an Image File Wrapper. Nevertheless, petitioner should print and retain an independent copy

Telephone inquires related to this electronic decision should be directed to the Electronic Business Center at 1-866-217-9197.

UNITED STATES PATENT AND TRADEMARK OFFICE

COMMISSIONER FOR PATENTS
UNITED STATES PATENT AND TRADEMARK OFFICE
P.O. BOX 1450
ALEXANDRIA, VA 22313-1450
www.uspto.gov

STAAS & HALSEY LLP
SUITE 700
1201 NEW YORK AVENUE, N.W.
WASHINGTON, DC 20005

COPY MAILED

SEP 14 2007

OFFICE OF PETITIONS

In re Application of	:	
Akira Horikawa, et al.	:	
Application No. 07/842,391	:	DECISION ON PETITION
Filed: May 20, 1992	:	
Attorney Docket No. 826.1151/JDH	:	

This is a decision on the petition, filed April 18, 2007, which is being treated as a petition under 37 CFR 1.181 (no fee), requesting withdrawal of the holding of abandonment in the above-identified application.

The petition is **GRANTED**.

This application was held abandoned for failure to timely respond to the non-final Office action of April 23, 2004, which set a three (3) month shortened statutory period for reply. A reply was due on or before July 23, 2004.

Petitioner states that a reply was in fact timely filed. To support this assertion, petitioner has submitted a copy of a return postcard which acknowledges receipt by the U.S. Patent and Trademark Office (USPTO) on July 23, 2004 of an amendment. A copy of the previously submitted reply accompanies the petition.

The amendment acknowledged as having been received in the USPTO on July 23, 2004 is not of record in the application file and has not to date been located. However, MPEP 503 states that "[a] post card receipt which itemizes and properly identifies the papers which are being filed serves as *prima facie* evidence of receipt in the USPTO of all the items listed thereon on the date stamped thereon by the USPTO." Further, it is noted that USPTO PALM records for this application acknowledges receipt of an amendment on 7/23/2004. Accordingly, it is concluded that the amendment was timely received in the USPTO but lost after receipt thereof.

In view of the above, the holding of abandonment is hereby withdrawn and the application restored to pending status.

The copy of the reply supplied with the petition will be accepted in place of the reply shown to have been received by the USPTO on July 23, 2004.

This application is being referred to Technology Center AU 2628 for appropriate action in the normal course of business on the reply received with petition.

Telephone inquires related to this decision should be directed to the undersigned at (571) 272-3204. Inquiries relating to further prosecution should be directed to the Technology Center.

Sherry D. Brinkley
Petitions Examiner
Office of Petitions

UNITED STATES PATENT AND TRADEMARK OFFICE

Commissioner for Patents
United States Patent and Trademark Office
P.O. Box 1450
Alexandria, VA 22313-1450
www.uspto.gov

STAAS & HALSEY LLP
SUITE 700
1201 NEW YORK AVENUE, N.W.
WASHINGTON DC 20005

MAILED

FEB 02 2009

OFFICE OF PETITIONS

In re Application Akira Horikawa et al. Application No. 07/842,391 Filed: May 20, 1992 Attorney Docket No. 826.1151/JDH	DECISION ON APPLICATION FOR PATENT TERM ADJUSTMENT

This is a decision on the "APPLICATION FOR PATENT TERM ADJUSTMENT UNDER 37 CFR 1.705," filed December 5, 2008. Applicant requests that the initial determination of Patent Term Adjustment of 95 days under 35 U.S.C. 154(b) be further adjusted under 37 CFR 1.702.

The request is **DISMISSED**.

It appears that the instant application became eligible for patent term adjustment pursuant to the provisions of 35 U.S.C. § 154(b) by virtue of the filing of a continued prosecution application (CPA) under § 1.53(d) on March 15, 2001.

Applicants are advised that § 1.705(b) provides the avenue before the Office for requesting reconsideration of the patent term adjustment indicated in the notice of allowance. See § 1.702-1.705. Moreover, § 1.705(b) provides that:

> An application for patent term adjustment under this section must be filed no later than the payment of the issue fee but may not be filed earlier than the date of mailing of the notice of allowance. An application for patent term adjustment under this section must be accompanied by:
>
> (1) The fee set forth in § 1.18(e) ...

The instant application for patent term adjustment was filed after the mailing of the notice of allowance and with payment of the issue fee. Thus, the application for patent term adjustment was timely filed. However, neither the fee under § 1.18(e) nor a general authorization to charge any required fees, accompanied the application for patent term adjustment. Accordingly, the request is dismissed for failure to comply with the requirement of paragraph (b)(1) to submit the fee under §1.18(e). Applicant is not precluded from promptly paying the required fee for consideration of this application for patent term adjustment. Applicant should call Senior Petitions Attorney Patricia Faison-Ball upon submission of such fee.

The Office of Data Management has been advised of this decision and directed to go forward with processing of this application into a patent.

Telephone inquiries specific to this matter should be directed to Senior Petitions Attorney Patricia Faison-Ball at (571) 272-3212.

Nancy Johnson
Senior Petitions Attorney
Office of Petitions

UNITED STATES PATENT AND TRADEMARK OFFICE

Commissioner for Patents
United States Patent and Trademark Office
P.O. Box 1450
Alexandria, VA 22313-1450
www.uspto.gov

STAAS & HALSEY LLP
SUITE 700
1201 NEW YORK AVENUE, N.W.
WASHINGTON DC 20005

MAILED

MAR 16 2009

OFFICE OF PETITIONS

In re Application
Akira Horikawa et al.
Application No. 07/842,391
Filed: May 20, 1992
Attorney Docket No. **826.1151/JDH**

: DECISION ON APPLICATION
: FOR PATENT TERM ADJUSTMENT

This is a decision on the renewed "APPLICATION FOR PATENT TERM ADJUSTMENT UNDER 37 CFR 1.705," filed February 24, 2009. Applicant requests that the initial determination of Patent Term Adjustment of 95 days under 35 U.S.C. 154(b) be further adjusted under 37 CFR 1.702.[1]

The application for patent term adjustment is **GRANTED** to the extent indicated herein.

The Office has updated the PAIR screen to reflect that the correct Patent Term Adjustment (PTA) determination at the time of the mailing of the Notice of Allowance is one thousand five hundred nine **(1509)** days. A copy of the updated PAIR screen, showing the correct determination, is enclosed.

On October 7, 2008, the Office mailed the Determination of Patent Term Adjustment under 35 U.S.C. 154(b) in the above-identified application. The Notice stated that the patent term adjustment (PTA) to date is ninety five days. Applicants submit the instant renewed application for patent term adjustment requesting that the initial determination of Patent Term Adjustment of 95 days under 35 U.S.C. 154(b) be further adjusted under 37 CFR 1.702. [2]

The Office initially determined a patent term adjustment of ninety five (95) days based on an adjustment for PTO delay of two hundred sixty six (266) days pursuant to 35 U.S.C. 154(b)(1)(A)(i) and 37 C.F.R. § 1.703(a)(1) reduced by applicants' delay of one one hundred seventy-one (171) days pursuant to 35 U.S.C. 154(b)(2)(C)(ii) and 37 C.F.R. § 1.704(b). There is no dispute regarding the reduction of 171 days for applicant delay. Applicant contends however that the patent issuing from this application is entitled to more days of patent term adjustment based on Office delay.

---

1 An application for patent term adjustment was timely filed December 5, 2008 but was dismissed in a decision mailed February 2, 2009 because neither the fee under § 1.18(e) nor a general authorization to charge any required fees, accompanied the application for patent term adjustment.

2 PALM records indicate that the Issue Fee was received in the Office on January 7, 2009.

Applicants submit evidence to show that the holding of abandonment for failure to timely respond to the non-Final Office Action was withdrawn based on their showing that a response had been timely filed on July 23, 2004. In support of a showing that the response was received July 23, 2004, applicants submitted a copy of their date-stamped postcard.

Applicants specifically state that the patent issuing from the application is not subject to a terminal disclaimer.

A review of the application history reveals that no response to the non-Final Office Action mailed April 23, 2004 was considered timely filed by the Office and the application became abandoned. Applicants were advised of the abandonment by notice mailed April 10, 2007. In response, on April 18, 2007 applicants filed a petition to withdraw the holding of abandonment. It is specifically noted that the petition to withdraw the holding of abandonment was filed within two months from the mailing date of a notice of abandonment. See § 1.704(c)(4). Moreover, by decision mailed September 14, 2007, the petition was granted on the basis that applicants had shown that a proper response was filed on July 23, 2004 with a USPTO date stamped post card receipt.

Thus, four months from the filing of the response, November 23, 2004 to the mailing of the Notice of Allowance, October 7, 2008, is 1414 days.

In view thereof, the correct determination of patent term adjustment at the time of the mailing of the notice of allowance is one thousand five hundred nine days.

The Office acknowledges submission of the $200.00 fee set forth in 37 CFR 1.18(e) with the instant renewed application. No additional fees are required.

The application is being forwarded to the Office of Data Management for issuance of the patent. The patent term adjustment indicated on the patent (as shown on the Issue Notification mailed about three weeks prior to patent issuance) will include any additional adjustment accrued both for Office delay in issuing the patent more than four months after payment of the issue fee and satisfaction of all outstanding requirements, and for the Office taking in excess of three years to issue the patent (to the extent that the three-year period does not overlap with periods already accorded).

Telephone inquiries specific to this matter should be directed to Patricia Faison-Ball, Senior Petitions Attorney, at (571) 272-3212.

Nancy Johnson
Senior Petitions Attorney
Office of Petitions

Enclosure: Copy of Revised PALM Screen.

Day : Monday
Date: 3/16/2009

PALM INTRANET

Time: 10:08:43

PTA Calculations for Application: 07/842391			
Application Filing Date:	05/20/1992	PTO Delay (PTO):	266
Issue Date of Patent:		Three Years:	0
Pre-Issue Petitions:	0	Applicant Delay (APPL):	171
Post-Issue Petitions:	0	Total PTA (days):	1509
PTO Delay Adjustment:	1414		

File Contents History

Number	Date	Contents Description	PTO	APPL	START
159	03/16/2009	ADJUSTMENT OF PTA CALCULATION BY PTO	1414		
142	10/07/2008	MAIL NOTICE OF ALLOWANCE			
140	10/03/2008	EXAMINER'S AMENDMENT COMMUNICATION			
139	10/03/2008	ISSUE REVISION COMPLETED			
138	10/03/2008	DOCUMENT VERIFICATION			
137	10/01/2008	NOTICE OF ALLOWANCE DATA VERIFICATION COMPLETED			
136	10/01/2008	NOTICE OF ALLOWABILITY			
133	08/24/2005	INFORMATION DISCLOSURE STATEMENT CONSIDERED			
132	04/15/2008	CASE DOCKETED TO EXAMINER IN GAU			
131	09/14/2007	MAIL-PETITION TO REVIVE APPLICATION - GRANTED			
130	04/18/2007	PETITION ENTERED			
129	04/10/2007	MAIL ABANDONMENT FOR FAILURE TO RESPOND TO OFFICE ACTION			
128	04/02/2007	ABANDONMENT FOR FAILURE TO RESPOND TO OFFICE ACTION			
127	08/05/2006	IFW TSS PROCESSING BY TECH CENTER COMPLETE			
126	03/21/2006	CASE DOCKETED TO EXAMINER IN GAU			
125.7	08/24/2005	INFORMATION DISCLOSURE STATEMENT (IDS) FILED			
125	08/24/2005	INFORMATION DISCLOSURE STATEMENT (IDS) FILED			
124	02/08/2005	CASE DOCKETED TO EXAMINER IN GAU			
123	07/23/2004	WORKFLOW INCOMING AMENDMENT IFW			

122	04/23/2004	MAIL NON-FINAL REJECTION	119		119
121	04/19/2004	NON-FINAL REJECTION			
120	02/12/2004	DATE FORWARDED TO EXAMINER			
119	08/26/2003	REQUEST FOR CONTINUED EXAMINATION (RCE)		92	105
118	02/12/2004	DISPOSAL FOR A RCE/CPA/129 (EXPRESS ABANDONMENT IF CPA)			
111	09/09/2003	MAIL ADVISORY ACTION (PTOL - 303)			
110	09/08/2003	ADVISORY ACTION (PTOL-303)			
109	08/26/2003	WORKFLOW - REQUEST FOR RCE - BEGIN			
108	08/26/2003	DATE FORWARDED TO EXAMINER			
107	06/26/2003	AMENDMENT AFTER FINAL REJECTION			
106	06/26/2003	REQUEST FOR EXTENSION OF TIME - GRANTED			
105	02/26/2003	MAIL FINAL REJECTION (PTOL - 326)			
104	02/24/2003	FINAL REJECTION			
103	12/20/2002	DATE FORWARDED TO EXAMINER			
102	12/16/2002	RESPONSE AFTER NON-FINAL ACTION		18	99
100	12/16/2002	REQUEST FOR EXTENSION OF TIME - GRANTED			
99	08/28/2002	MAIL NON-FINAL REJECTION	147		92
98	08/26/2002	NON-FINAL REJECTION			
97	06/20/2002	MAIL MISCELLANEOUS COMMUNICATION TO APPLICANT			
96	06/19/2002	MISCELLANEOUS COMMUNICATION TO APPLICANT - NO ACTION COUNT			
93	06/12/2002	DATE FORWARDED TO EXAMINER			
92	12/03/2001	RESPONSE AFTER NON-FINAL ACTION		61	86
91	05/30/2002	MAIL EXAMINER INTERVIEW SUMMARY (PTOL - 413)			
89	10/17/2001	EXAMINER INTERVIEW SUMMARY RECORD (PTOL - 413)			
86	07/03/2001	MAIL NON-FINAL REJECTION			
85	07/02/2001	NON-FINAL REJECTION			
84.7	03/15/2001	INFORMATION DISCLOSURE STATEMENT (IDS) FILED			
84	03/15/2001	INFORMATION DISCLOSURE STATEMENT (IDS) FILED			
83	03/15/2001	PRELIMINARY AMENDMENT			
82	04/25/2001	EXAMINER INTERVIEW SUMMARY RECORD			

		(PTOL - 413)			
81	04/26/2001	DATE FORWARDED TO EXAMINER			
80	03/15/2001	CONTINUING PROSECUTION APPLICATION - CONTINUATION (ACPA)			
79	03/15/2001	MAIL EXPRESS ABANDONMENT (DURING EXAMINATION)			
78	03/15/2001	EXPRESS ABANDONMENT (DURING EXAMINATION)			
77	04/20/2001	MAIL ADVISORY ACTION (PTOL - 303)			
76	04/19/2001	ADVISORY ACTION (PTOL-303)			
75	03/15/2001	MISCELLANEOUS INCOMING LETTER			
74	04/17/2001	DATE FORWARDED TO EXAMINER			

Search Another: Application# Search

EXPLANATION OF PTA CALCULATION

EXPLANATION OF PTE CALCULATION

To go back, right click here and select Back. To go forward, right click here and select Forward. To refresh, right click here and select Refresh.

Back to OASIS | Home page

Under the Paperwork Reduction Act of 1995, no persons are required to respond to a collection of information unless it displays valid OMB control number.

PETITION TO ACCEPT UNINTENTIONALLY DELAYED PAYMENT OF MAINTENANCE FEE IN AN EXPIRED PATENT (37 CFR 1.378(c))

Patent Number	Issue Date (YYYY-MM-DD)	Application Number	Filing Date (YYYY-MM-DD)	Docket Number (if applicable)
5313235	1994-05-17	07843720	1992-02-28	ID053507

CAUTION: Maintenance fee (and surcharge, if any) payment must correctly identify: (1) the patent number and (2) the application number of the actual U.S. application leading to issuance of that patent to ensure the fee(s) is/are associated with the correct patent. 37 CFR 1.366(c) and (d).

SMALL ENTITY
☐ Patentee claims, or has previously claimed, small entity status. See 37 CFR 1.27.

LOSS OF ENTITLEMENT TO SMALL ENTITY STATUS
☐ Patentee is no longer entitled to small entity status. See 37 CFR 1.27(g)

NOT Small Entity		Small Entity	
Fee	Code	Fee	Code
○ 3 ½ year	(1551)	○ 3 ½ year	(2551)
○ 7 ½ year	(1552)	○ 7 ½ year	(2552)
◉ 11 ½ year	(1553)	○ 11 ½ year	(2553)

SURCHARGE
The surcharge required by 37 CFR 1.20(i)(2) (Fee Code 1558) must be paid as a condition of accepting unintentionally delayed payment of the maintenance fee.

MAINTENANCE FEE (37 CFR 1.20(e)-(g))
The appropriate maintenance fee must be submitted with this petition.

STATEMENT
THE UNDERSIGNED CERTIFIES THAT THE DELAY IN PAYMENT OF THE MAINTENANCE FEE TO THIS PATENT WAS UNINTENTIONAL

PETITIONER(S) REQUEST THAT THE DELAYED PAYMENT OF THE MAINTENANCE FEE BE ACCEPTED AND THE PATENT REINSTATED

THIS PORTION MUST BE COMPLETED BY THE SIGNATORY OR SIGNATORIES

37 CFR 1.378(d) states: "Any petition under this section must be signed by an attorney or agent registered to practice before the Patent and Trademark Office, or by the patentee, the assignee, or other party in interest."

I certify, in accordance with 37 CFR 1.4(d)(4) that I am

◉ An attorney or agent registered to practice before the Patent and Trademark Office

○ A sole patentee

○ A joint patentee; I certify that I am authorized to sign this submission on behalf of all the other patentees.

○ A joint patentee; all of whom are signing this e-petition

○ The assignee of record of the entire interest

Patent Practitioner			
A signature of the applicant or representative is required in accordance with 37 CFR 1.33 and 10.18. Please see 37 CFR 1.4(d) for the form of the signature			
Signature	/DJCushing/	Date (YYYY-MM-DD)	2007-10-26
Name	David J. Cushing	Registration Number	28703

This collection of information is required by 37 CFR 1.378(c). The information is required to obtain or retain a benefit by the public which is to file (and by the USPTO to process) an application. Confidentiality is governed by 35 U.S.C. 122 and 37 CFR 1.11 and 1.14. This collection is estimated to take 1 hour to complete, including gathering, preparing, and submitting the completed application form to the USPTO. Time will vary depending upon the individual case. Any comments on the amount of time you require to complete this form and/ or suggestions for reducing this burden, should be sent to the Chief Information Officer, U.S. Patent and Trademark Office, U.S. Department of Commerce, P.O. Box 1450, Alexandria, VA 22313-1450. DO NOT SEND FEES OR COMPLETED FORMS TO THIS ADDRESS. **This form can only be used when in conjunction with EFS-Web. If this form is mailed to the USPTO, it may cause delays in reinstating the patent.**

Privacy Act Statement

The Privacy Act of 1974 (P.L. 93-579) requires that you be given certain information in connection with your submission of the attached form related to a patent application or patent. Accordingly, pursuant to the requirements of the Act, please be advised that: (1) the general authority for the collection of this information is 35 U.S.C. 2(b)(2); (2) furnishing of the information solicited is voluntary; and (3) the principal purpose for which the information is used by the U.S. Patent and Trademark Office is to process and/or examine your submission related to a patent application or patent. If you do not furnish the requested information, the U.S. Patent and Trademark Office may not be able to process and/or examine your submission, which may result in termination of proceedings or abandonment of the application or expiration of the patent.

The information provided by you in this form will be subject to the following routine uses:

1. The information on this form will be treated confidentially to the extent allowed under the Freedom of Information Act (5 U.S.C. 552) and the Privacy Act (5 U.S.C. 552a). Records from this system of records may be disclosed to the Department of Justice to determine whether the Freedom of Information Act requires disclosure of these record s.

2. A record from this system of records may be disclosed, as a routine use, in the course of presenting evidence to a court, magistrate, or administrative tribunal, including disclosures to opposing counsel in the course of settlement negotiations.

3. A record in this system of records may be disclosed, as a routine use, to a Member of Congress submitting a request involving an individual, to whom the record pertains, when the individual has requested assistance from the Member with respect to the subject matter of the record.

4. A record in this system of records may be disclosed, as a routine use, to a contractor of the Agency having need for the information in order to perform a contract. Recipients of information shall be required to comply with the requirements of the Privacy Act of 1974, as amended, pursuant to 5 U.S.C. 552a(m).

5. A record related to an International Application filed under the Patent Cooperation Treaty in this system of records may be disclosed, as a routine use, to the International Bureau of the World Intellectual Property Organization, pursuant to the Patent Cooperation Treaty.

6. A record in this system of records may be disclosed, as a routine use, to another federal agency for purposes of National Security review (35 U.S.C. 181) and for review pursuant to the Atomic Energy Act (42 U.S.C. 218(c)).

7. A record from this system of records may be disclosed, as a routine use, to the Administrator, General Services, or his/her designee, during an inspection of records conducted by GSA as part of that agency's responsibility to recommend improvements in records management practices and programs, under authority of 44 U.S.C. 2904 and 2906. Such disclosure shall be made in accordance with the GSA regulations governing inspection of records for this purpose, and any other relevant (i.e., GSA or Commerce) directive. Such disclosure shall not be used to make determinations about individuals.

8. A record from this system of records may be disclosed, as a routine use, to the public after either publication of the application pursuant to 35 U.S.C. 122(b) or issuance of a patent pursuant to 35 U.S.C. 151. Further, a record may be disclosed, subject to the limitations of 37 CFR 1.14, as a routine use, to the public if the record was filed in an application which became abandoned or in which the proceedings were terminated and which application is referenced by either a published application, an application open to public inspections or an issued patent.

9. A record from this system of records may be disclosed, as a routine use, to a Federal, State, or local law enforcement agency, if the USPTO becomes aware of a violation or potential violation of law or regulation.

UNITED STATES PATENT AND TRADEMARK OFFICE

Commissioner for Patents
United States Patent and Trademark Office
P.O. Box 1450
Alexandria, VA 22313-1450
www.uspto.gov

In re Patent No. 5313235
Issue Date: May 17,1994
Application No. 07843720
Filed: February 28,1992
Attorney Docket No. 013227-023

:
:DECISION GRANTING PETITION
:UNDER 37 CFR 1.378(c)
:

This is a decision on the electronic petition, filed October 26,2007 ,under 37 CFR 1.378(c) to accept the unintentionally delayed payment of the 11.5 year maintenance fee for the above-identified patent.

The petition is GRANTED.

The maintenance fee is accepted, and the above-identified patent reinstated as of October 26,2007 . This decision also constitutes notice that the fee has been accepted. An electronic copy of the petition and this decision has been created as an entry in an Image File Wrapper. Nevertheless, petitioner should print and retain an independent copy

Telephone inquires related to this electronic decision should be directed to the Electronic Business Center at 1-866-217-9197.

UNITED STATES PATENT AND TRADEMARK OFFICE

Commissioner for Patents
United States Patent and Trademark Office

P.O. Box 1450
Alexandria, VA 22313-1450
www.uspto.gov

THOMAS A. GALLAGHER
100 Green Street, 3RD Floor
San Francisco, CA. 94111-1302

MAILED

MAR 30 2009

OFFICE OF PETITIONS

In re Patent No. 5,237,414	:	
Issue Date: August 17, 1993	:	
Application No. 07/844,293	:	DECISION ON PETITION
Filed: March 2, 1992	:	
Inventor: Yves C. Faroudja	:	

This is a corrected decision on the renewed petition filed October 7, 2008, requesting reconsideration pursuant to 37 CFR § 1.183. The petition is being properly treated as a petition under 37 CFR §1.182 to invalidate an assignment previously recorded against the above-identified patent. The decision mailed October 24, 2008, granting this renewed petition, has been reevaluated and is **VACATED.**

The petition under 37 CFR § 1.182 is **dismissed.**

Any reply must be submitted within TWO MONTHS from the mail date of this decision. Extensions of time under 37 CFR § 1.136(a) are permitted. This is not a final agency action within the meaning of 5 U.S.C. § 704.

Petitioner has requested that the assignment record be amended to reflect that petitioner is the true owner of the above-noted patent. In particular petitioner requests expungement of purportedly erroneous assignment documents at Reel 020817, Frame 0243, so that petitioner Yves C. Faroudja, may be identified as the true and correct owner of the '414 patent. Petitioner submits that the assignment submitted on April 9, 2008 was submitted with an improper document attached and therefore request expungement of the assignment.

As discussed in section 323.01(d) of the Manual of Patent Examining Procedure (MPEP), petitions to correct, modify or "expunge" assignment records are granted only if the petitioner can prove that:

(A) the normal corrective procedures outlined in MPEP § 323.01(a) through § 323.01(c) will not provide the petitioner with adequate relief; and
(B) the integrity of the assignment records will not be affected by granting the petition.

Petitioner has not proven either item A or B.

In regard to item A, there is no evidence of record that petitioner has attempted or considered any of the corrective procedures outlined in MPEP § 323.01(a) through § 323.01(c). Also, there is no explanation of record as to why none of these procedures would provide adequate relief.

Petitioner seeks an extraordinary remedy, properly addressed under 37 CFR § 1.182. The USPTO will not normally resort to an extraordinary remedy under 37 CFR § 1.182 if the rules of practice and the procedures before the USPTO already provide an avenue for the requested relief. See Cantello v. Rasmussen, 220 USPQ 664, (Comm'r Pats. 1982).

As background, the USPTO simply acts in a ministerial capacity in recording documents that have been submitted for recordation. See 35 USC 261 and 37 CFR § 3.11. However, the recording of a document pursuant to 37 CFR § 3.11 is **not** a determination by the USPTO of the validity of the document *per se* or the effect that document has on the title to a patent or application. See 37 CFR § 3.54. Moreover, it is USPTO policy to maintain a complete history of claimed interests in a given property, and, as such, a recorded assignment document will be retained, even if it is subsequently found to be invalid. In re Raney, 24 USPQ2d 1713 (Comm'r Pat. 1992).

As set forth in MPEP 323, an error in a recorded assignment is not corrected by invalidating the previous document, but by simply submitting a "corrective document". The "corrective document" must include 1) a copy of the original assignment document with the corrections made therein. The corrections must be initialed and dated by the party conveying the interest; and 2) a new Recordation Form Cover Sheet (form PTO-1595). The new recordation form cover sheet must identify the submission as a "corrective document" submission and indicate the reel and frame number where the incorrectly recorded assignment document appears. The person signing the new recordation form cover sheet must state that the information provided on the new cover sheet is true and correct and that any copy submitted is a true copy of the original document. The original cover sheet should be submitted with the corrective document. The corrective document will be recorded and given a new reel and frame number and recording date. The recording fee set forth in 37 CFR 1.21(h) is required for each patent application and patent against which the corrective document is being recorded. See MPEP § 302.06. Corrections may be made on the original assignment document, for example, by lining out an incorrect patent or application number in a merger or change of name (see MPEP § 314).

Therefore, the rules of practice and the procedures before the USPTO provide an avenue for the requested relief without relying upon extraordinary measures. As a request for the Office to invalidate an assignment is both extraordinary and contrary to USPTO policy, this petition must be dismissed.

In regard to item B, the statements submitted in support of the petition to expunge fails to establish that expungement will not affect the assignment records in this instance. The assignment recorded in the USPTO assignment records indicates that Faroudja Laboratories, Inc. has some rights with regard to the above mentioned patent, which suggests that the recordation may have been proper. Petitioner should note that recordation is available for numerous

documents related to a patent, not just the assignment of the entire right, title and interest in the patent. See at least MPEP § 313. Moreover, the USPTO does not determine the extent of rights transferred by the assignment papers or any recorded document. Such a determination is made by a court of relevant jurisdiction. No evidence is of record establishing that the assignment was recorded improperly. Absent sufficient evidence to support the requested expungement, the integrity of the assignment records will not be disturbed by the USPTO.

There is no indication that the person signing the petition was ever given a power of attorney or authorization of agent to prosecute the application. If the person signing the petition desires to receive future correspondence regarding this application, the appropriate power of attorney or authorization of agent must be submitted. A courtesy copy of this decision is being mailed to the person signing the petition; however, all future correspondence will be directed to the address currently of record until appropriate instructions are received.

Telephone inquiries concerning this communication should be directed to the undersigned at (571)272-0602.

Thurman K. Page
Petitions Examiner
Office of Petitions

cc: Michael J. Ferrazaro
P.O. Box 1687
Cupertino, CA 95015-1687

UNITED STATES PATENT AND TRADEMARK OFFICE

COMMISSIONER FOR PATENTS
UNITED STATES PATENT AND TRADEMARK OFFICE
WASHINGTON, D.C. 20231
www.uspto.gov

APR 11 2002

Ted K. Ringsred
3M/Office of Intellectual Property Counsel
P.O. Box 33427
St. Paul, MN 55133-3427

In Re: Patent Term Extension
Application for
U.S. Patent No. 5,238,944

APPLICATION NOT ELECTED

The application for patent term extension for U.S. Patent No. 5,238,944, which claims the human drug product ALDARA™, is dismissed.

A single request for reconsideration of this dismissal of the application for patent term extension may be made if filed within one month of the date of this notice. Extensions of time under 37 CFR § 1.136(a) are not applicable to this time period.

The application for patent term extension for U.S. Patent No. 4,689,338 was extended based upon the regulatory review period of ALDARA™. Since only one patent may be extended based upon the regulatory review period of a product, the application for patent term extension for 5,238,944 cannot be granted.

Any correspondence with respect to this matter should be addressed as follows:

By mail: Commissioner for Patents
Box Patent Ext.
Washington, D.C. 20231

By FAX: (703) 872-9411
Attn: Office of Patent Legal Administration

Telephone inquiries related to this determination should be directed to the undersigned at (703) 306-3159.

Karin Tyson
Senior Legal Advisor
Office of Patent Legal Administration
Office of the Deputy Commissioner
for Patent Examination Policy

cc: David T. Read
Acting Director Health Assessment Policy Staff, CDER
Food and Drug Administration
1451 Rockville Pike, HFD-7
Rockville, MD 20852

RE: ALDARA™
FDA Docket No.: 97E-0269

UNITED STATES PATENT AND TRADEMARK OFFICE

COMMISSIONER FOR PATENTS
UNITED STATES PATENT AND TRADEMARK OFFICE
P.O. BOX 1450
ALEXANDRIA, VA 22313-1450
www.uspto.gov

OLE K. NILSSEN
200 N. HARRISON STREET
SUITE 103
ALGONQUIN, IL 60102

COPY MAILED
JUN 08 2006
OFFICE OF PETITIONS

In re Application of	:	
OLE K. NILSSEN	:	
Application No. 07/846,014	:	
Filed: March 4, 1992	:	NOTICE
Patent No.: 5,446,346	:	
Issued: August 29, 1995	:	
Title of Invention:	:	
ELECTRONIC BALLAST WITH CONTROLLED	:	
DC SUPPLY VOLTAGE	:	

This is a notice regarding your request to change your entity status to large.

Office records reveal that there is no assignee of the above-identified application.

In accordance with 37 CFR 1.27(g), said notice is hereby accepted. Office records have been corrected to indicate loss of small entity status in the above-identified application.

Telephone inquiries concerning this matter should be directed to the undersigned at (571) 272-3232.

Derek L. Woods
Attorney
Office of Petitions

DO NOT SCAN! **Please forward case and paper to address shown below.**

SPE RESPONSE FOR CERTIFICATE OF CORRECTION

Paper No.: 17

DATE : 1-13-07

TO SPE OF : ART UNIT 1600

SUBJECT : Request for Certificate of Correction for Appl. No.: 07851541 Patent No.: 5258510

Please respond to this request for a certificate of correction within 7 days.

Please review the requested changes/corrections as shown in the attached certificate of correction. Please complete this form (see below) and forward it with the file to:

Certificates of Correction Branch (CofC)
South Tower - 9A22
Palm Location 7580

Valerie Jackson
Certificates of Correction Branch
703-308-9390 ext. 114

Thank You For Your Assistance

The request for issuing the above-identified correction(s) is hereby:

Note your decision on the appropriate box.

- ☐ **Approved** — All changes apply.
- ☐ **Approved in Part** — Specify below which changes **do not** apply.
- ☒ **Denied** — State the reasons for denial below.

Comments: Declaration specifically does not claim priority to PCT/JP90/01340. No other statement to indicate parent is 371 application

WILLIAM R. DIXON, JR.
SPECIAL PROGRAM EXAMINER

SPE

TC1600
Art Unit

PTOL-306 (REV. 7/03)

U.S. DEPARTMENT OF COMMERCE Patent and Trademark Office

DO NOT SCAN! Please forward case and paper to address shown below.

SPE RESPONSE FOR CERTIFICATE OF CORRECTION

Paper No.: 20

DATE : 4/4/07

TO SPE OF : ART UNIT 1600

SUBJECT : Request for Certificate of Correction for Appl. No.: 07851541 Patent No.: 5258570

Please respond to this request for a certificate of correction within 7 days.

Please review the requested changes/corrections as shown in the attached certificate of correction. Please complete this form (see below) and forward it with the file to:

Certificates of Correction Branch (CofC)
South Tower - 9A22
Palm Location 7580

Valerie Jackson
Certificates of Correction Branch
703-308-9390 ext. 114

Thank You For Your Assistance

The request for issuing the above-identified correction(s) is hereby:

Note your decision on the appropriate box.

- ☒ **Approved** — All changes apply.
- ☐ **Approved in Part** — Specify below which changes **do not** apply.
- ☐ **Denied** — State the reasons for denial below.

Comments: _____

SPE

1624
Art Unit

PTOL-306 (REV. 7/03)

U.S. DEPARTMENT OF COMMERCE Patent and Trademark Office

UNITED STATES PATENT AND TRADEMARK OFFICE

CERTIFICATE OF CORRECTION

PATENT NO. : 5,258,510
APPLICATION NO. : 07/851541
DATED : November 2, 1993
INVENTOR(S) : Hidenori Ogawa et al.

It is certified that error appears in the above-identified patent and that said Letters Patent is hereby corrected as shown below:

On the title page item [63], Related U.S. Application Data should read:
Continuation-in-part of Ser. No. 762,015, Jun. 19, 1991, abandoned, which is a national stage entry of PCT/JP90/01340, filed Oct. 18, 1990.

Col. 1, line 4, should read:
This is a continuation-in-part application of U.S. Pat. Ser. No. 07/762,015 filed on Jun. 19, 1991, now abandoned, which is a national stage entry of PCT/JP90/01340, filed Oct. 18, 1990.

Signed and Sealed this

Twenty-fourth Day of July, 2007

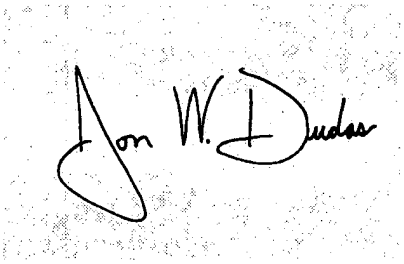

JON W. DUDAS
Director of the United States Patent and Trademark Office

Under the Paperwork Reduction Act of 1995, no persons are required to respond to a collection of information unless it displays valid OMB control number.

PETITION TO ACCEPT UNINTENTIONALLY DELAYED PAYMENT OF MAINTENANCE FEE IN AN EXPIRED PATENT (37 CFR 1.378(c))

Patent Number	Issue Date (YYYY-MM-DD)	Application Number	Filing Date (YYYY-MM-DD)	Docket Number (if applicable)
5,378,819	1995-01-03	07/855,412	1992-03-19	03170016AA

CAUTION: Maintenance fee (and surcharge, if any) payment must correctly identify: (1) the patent number and (2) the application number of the actual U.S. application leading to issuance of that patent to ensure the fee(s) is/are associated with the correct patent. 37 CFR 1.366(c) and (d).

SMALL ENTITY
☒ Patentee claims, or has previously claimed, small entity status. See 37 CFR 1.27.

LOSS OF ENTITLEMENT TO SMALL ENTITY STATUS
☐ Patentee is no longer entitled to small entity status. See 37 CFR 1.27(g)

NOT Small Entity			Small Entity		
	Fee	Code		Fee	Code
○	3 ½ year	(1551)	○	3 ½ year	(2551)
○	7 ½ year	(1552)	○	7 ½ year	(2552)
○	11 ½ year	(1553)	◉	11 ½ year	(2553)

SURCHARGE
The surcharge required by 37 CFR 1.20(i)(2) (Fee Code 1558) must be paid as a condition of accepting unintentionally delayed payment of the maintenance fee.

MAINTENANCE FEE (37 CFR 1.20(e)-(g))
The appropriate maintenance fee must be submitted with this petition.

STATEMENT
THE UNDERSIGNED CERTIFIES THAT THE DELAY IN PAYMENT OF THE MAINTENANCE FEE TO THIS PATENT WAS UNINTENTIONAL

PETITIONER(S) REQUEST THAT THE DELAYED PAYMENT OF THE MAINTENANCE FEE BE ACCEPTED AND THE PATENT REINSTATED

THIS PORTION MUST BE COMPLETED BY THE SIGNATORY OR SIGNATORIES

37 CFR 1.378(d) states: "Any petition under this section must be signed by an attorney or agent registered to practice before the Patent and Trademark Office, or by the patentee, the assignee, or other party in interest."

I certify, in accordance with 37 CFR 1.4(d)(4) that I am

◉ An attorney or agent registered to practice before the Patent and Trademark Office

○ A sole patentee

○ A joint patentee; I certify that I am authorized to sign this submission on behalf of all the other patentees.

○ A joint patentee; all of whom are signing this e-petition

○ The assignee of record of the entire interest

Patent Practitioner			
A signature of the applicant or representative is required in accordance with 37 CFR 1.33 and 10.18. Please see 37 CFR 1.4(d) for the form of the signature			
Signature	/Michael E. Whitham/	Date (YYYY-MM-DD)	2007-02-09
Name	Michael E. Whitham	Registration Number	32635

This collection of information is required by 37 CFR 1.378(c). The information is required to obtain or retain a benefit by the public which is to file (and by the USPTO to process) an application. Confidentiality is governed by 35 U.S.C. 122 and 37 CFR 1.11 and 1.14. This collection is estimated to take 1 hour to complete, including gathering, preparing, and submitting the completed application form to the USPTO. Time will vary depending upon the individual case. Any comments on the amount of time you require to complete this form and/ or suggestions for reducing this burden, should be sent to the Chief Information Officer, U.S. Patent and Trademark Office, U.S. Department of Commerce, P.O. Box 1450, Alexandria, VA 22313-1450. DO NOT SEND FEES OR COMPLETED FORMS TO THIS ADDRESS. **This form can only be used when in conjunction with EFS-Web. If this form is mailed to the USPTO, it may cause delays in reinstating the patent.**

Privacy Act Statement

The Privacy Act of 1974 (P.L. 93-579) requires that you be given certain information in connection with your submission of the attached form related to a patent application or patent. Accordingly, pursuant to the requirements of the Act, please be advised that: (1) the general authority for the collection of this information is 35 U.S.C. 2(b)(2); (2) furnishing of the information solicited is voluntary; and (3) the principal purpose for which the information is used by the U.S. Patent and Trademark Office is to process and/or examine your submission related to a patent application or patent. If you do not furnish the requested information, the U.S. Patent and Trademark Office may not be able to process and/or examine your submission, which may result in termination of proceedings or abandonment of the application or expiration of the patent.

The information provided by you in this form will be subject to the following routine uses:

1. The information on this form will be treated confidentially to the extent allowed under the Freedom of Information Act (5 U.S.C. 552) and the Privacy Act (5 U.S.C. 552a). Records from this system of records may be disclosed to the Department of Justice to determine whether the Freedom of Information Act requires disclosure of these record s.

2. A record from this system of records may be disclosed, as a routine use, in the course of presenting evidence to a court, magistrate, or administrative tribunal, including disclosures to opposing counsel in the course of settlement negotiations.

3. A record in this system of records may be disclosed, as a routine use, to a Member of Congress submitting a request involving an individual, to whom the record pertains, when the individual has requested assistance from the Member with respect to the subject matter of the record.

4. A record in this system of records may be disclosed, as a routine use, to a contractor of the Agency having need for the information in order to perform a contract. Recipients of information shall be required to comply with the requirements of the Privacy Act of 1974, as amended, pursuant to 5 U.S.C. 552a(m).

5. A record related to an International Application filed under the Patent Cooperation Treaty in this system of records may be disclosed, as a routine use, to the International Bureau of the World Intellectual Property Organization, pursuant to the Patent Cooperation Treaty.

6. A record in this system of records may be disclosed, as a routine use, to another federal agency for purposes of National Security review (35 U.S.C. 181) and for review pursuant to the Atomic Energy Act (42 U.S.C. 218(c)).

7. A record from this system of records may be disclosed, as a routine use, to the Administrator, General Services, or his/her designee, during an inspection of records conducted by GSA as part of that agency's responsibility to recommend improvements in records management practices and programs, under authority of 44 U.S.C. 2904 and 2906. Such disclosure shall be made in accordance with the GSA regulations governing inspection of records for this purpose, and any other relevant (i.e., GSA or Commerce) directive. Such disclosure shall not be used to make determinations about individuals.

8. A record from this system of records may be disclosed, as a routine use, to the public after either publication of the application pursuant to 35 U.S.C. 122(b) or issuance of a patent pursuant to 35 U.S.C. 151. Further, a record may be disclosed, subject to the limitations of 37 CFR 1.14, as a routine use, to the public if the record was filed in an application which became abandoned or in which the proceedings were terminated and which application is referenced by either a published application, an application open to public inspections or an issued patent.

9. A record from this system of records may be disclosed, as a routine use, to a Federal, State, or local law enforcement agency, if the USPTO becomes aware of a violation or potential violation of law or regulation.

UNITED STATES PATENT AND TRADEMARK OFFICE

Commissioner for Patents
United States Patent and Trademark Office
P.O. Box 1450
Alexandria, VA 22313-1450
www.uspto.gov

In re Patent No. 5378819
Issue Date: January 3,1995
Application No. 07855412
Filed: March 19,1992
Attorney Docket No. WSUR-1-6171

:
:DECISION GRANTING PETITION
:UNDER 37 CFR 1.378(c)
:

This is a decision on the electronic petition, filed February 9,2007 ,under 37 CFR 1.378(c) to accept the unintentionally delayed payment of the 11.5 year maintenance fee for the above-identified patent.

The petition is GRANTED.

The maintenance fee is accepted, and the above-identified patent reinstated as of February 9,2007 . This decision also constitutes notice that the fee has been accepted. An electronic copy of the petition and this decision has been created as an entry in an Image File Wrapper. Nevertheless, petitioner should print and retain an independent copy

Telephone inquires related to this electronic decision should be directed to the Electronic Business Center at 1-866-217-9197.

Under the Paperwork Reduction Act of 1995, no persons are required to respond to a collection of information unless it displays valid OMB control number.

PETITION TO ACCEPT UNINTENTIONALLY DELAYED PAYMENT OF MAINTENANCE FEE IN AN EXPIRED PATENT (37 CFR 1.378(c))

Patent Number	Issue Date (YYYY-MM-DD)	Application Number	Filing Date (YYYY-MM-DD)	Docket Number (if applicable)
5340430	1994-08-23	07856202	1992-05-13	903-227 PCT/US

CAUTION: Maintenance fee (and surcharge, if any) payment must correctly identify: (1) the patent number and (2) the application number of the actual U.S. application leading to issuance of that patent to ensure the fee(s) is/are associated with the correct patent. 37 CFR 1.366(c) and (d).

SMALL ENTITY
☐ Patentee claims, or has previously claimed, small entity status. See 37 CFR 1.27.

LOSS OF ENTITLEMENT TO SMALL ENTITY STATUS
☐ Patentee is no longer entitled to small entity status. See 37 CFR 1.27(g)

NOT Small Entity		Small Entity	
Fee	Code	Fee	Code
○ 3 ½ year	(1551)	○ 3 ½ year	(2551)
○ 7 ½ year	(1552)	○ 7 ½ year	(2552)
◉ 11 ½ year	(1553)	○ 11 ½ year	(2553)

SURCHARGE
The surcharge required by 37 CFR 1.20(i)(2) (Fee Code 1558) must be paid as a condition of accepting unintentionally delayed payment of the maintenance fee.

MAINTENANCE FEE (37 CFR 1.20(e)-(g))
The appropriate maintenance fee must be submitted with this petition.

STATEMENT
THE UNDERSIGNED CERTIFIES THAT THE DELAY IN PAYMENT OF THE MAINTENANCE FEE TO THIS PATENT WAS UNINTENTIONAL

PETITIONER(S) REQUEST THAT THE DELAYED PAYMENT OF THE MAINTENANCE FEE BE ACCEPTED AND THE PATENT REINSTATED

THIS PORTION MUST BE COMPLETED BY THE SIGNATORY OR SIGNATORIES

37 CFR 1.378(d) states: "Any petition under this section must be signed by an attorney or agent registered to practice before the Patent and Trademark Office, or by the patentee, the assignee, or other party in interest."

I certify, in accordance with 37 CFR 1.4(d)(4) that I am

◉ An attorney or agent registered to practice before the Patent and Trademark Office

○ A sole patentee

○ A joint patentee; I certify that I am authorized to sign this submission on behalf of all the other patentees.

○ A joint patentee; all of whom are signing this e-petition

○ The assignee of record of the entire interest

Patent Practitioner			
A signature of the applicant or representative is required in accordance with 37 CFR 1.33 and 10.18. Please see 37 CFR 1.4(d) for the form of the signature			
Signature	/John S. SOPKO, Reg.# 41,321/	Date (YYYY-MM-DD)	2007-07-02
Name	John S. Sopko	Registration Number	41321

This collection of information is required by 37 CFR 1.378(c). The information is required to obtain or retain a benefit by the public which is to file (and by the USPTO to process) an application. Confidentiality is governed by 35 U.S.C. 122 and 37 CFR 1.11 and 1.14. This collection is estimated to take 1 hour to complete, including gathering, preparing, and submitting the completed application form to the USPTO. Time will vary depending upon the individual case. Any comments on the amount of time you require to complete this form and/ or suggestions for reducing this burden, should be sent to the Chief Information Officer, U.S. Patent and Trademark Office, U.S. Department of Commerce, P.O. Box 1450, Alexandria, VA 22313-1450. DO NOT SEND FEES OR COMPLETED FORMS TO THIS ADDRESS. **This form can only be used when in conjunction with EFS-Web. If this form is mailed to the USPTO, it may cause delays in reinstating the patent.**

Privacy Act Statement

The Privacy Act of 1974 (P.L. 93-579) requires that you be given certain information in connection with your submission of the attached form related to a patent application or patent. Accordingly, pursuant to the requirements of the Act, please be advised that: (1) the general authority for the collection of this information is 35 U.S.C. 2(b)(2); (2) furnishing of the information solicited is voluntary; and (3) the principal purpose for which the information is used by the U.S. Patent and Trademark Office is to process and/or examine your submission related to a patent application or patent. If you do not furnish the requested information, the U.S. Patent and Trademark Office may not be able to process and/or examine your submission, which may result in termination of proceedings or abandonment of the application or expiration of the patent.

The information provided by you in this form will be subject to the following routine uses:

1. The information on this form will be treated confidentially to the extent allowed under the Freedom of Information Act (5 U.S.C. 552) and the Privacy Act (5 U.S.C. 552a). Records from this system of records may be disclosed to the Department of Justice to determine whether the Freedom of Information Act requires disclosure of these record s.

2. A record from this system of records may be disclosed, as a routine use, in the course of presenting evidence to a court, magistrate, or administrative tribunal, including disclosures to opposing counsel in the course of settlement negotiations.

3. A record in this system of records may be disclosed, as a routine use, to a Member of Congress submitting a request involving an individual, to whom the record pertains, when the individual has requested assistance from the Member with respect to the subject matter of the record.

4. A record in this system of records may be disclosed, as a routine use, to a contractor of the Agency having need for the information in order to perform a contract. Recipients of information shall be required to comply with the requirements of the Privacy Act of 1974, as amended, pursuant to 5 U.S.C. 552a(m).

5. A record related to an International Application filed under the Patent Cooperation Treaty in this system of records may be disclosed, as a routine use, to the International Bureau of the World Intellectual Property Organization, pursuant to the Patent Cooperation Treaty.

6. A record in this system of records may be disclosed, as a routine use, to another federal agency for purposes of National Security review (35 U.S.C. 181) and for review pursuant to the Atomic Energy Act (42 U.S.C. 218(c)).

7. A record from this system of records may be disclosed, as a routine use, to the Administrator, General Services, or his/her designee, during an inspection of records conducted by GSA as part of that agency's responsibility to recommend improvements in records management practices and programs, under authority of 44 U.S.C. 2904 and 2906. Such disclosure shall be made in accordance with the GSA regulations governing inspection of records for this purpose, and any other relevant (i.e., GSA or Commerce) directive. Such disclosure shall not be used to make determinations about individuals.

8. A record from this system of records may be disclosed, as a routine use, to the public after either publication of the application pursuant to 35 U.S.C. 122(b) or issuance of a patent pursuant to 35 U.S.C. 151. Further, a record may be disclosed, subject to the limitations of 37 CFR 1.14, as a routine use, to the public if the record was filed in an application which became abandoned or in which the proceedings were terminated and which application is referenced by either a published application, an application open to public inspections or an issued patent.

9. A record from this system of records may be disclosed, as a routine use, to a Federal, State, or local law enforcement agency, if the USPTO becomes aware of a violation or potential violation of law or regulation.

UNITED STATES PATENT AND TRADEMARK OFFICE

Commissioner for Patents
United States Patent and Trademark Office
P.O. Box 1450
Alexandria, VA 22313-1450
www.uspto.gov

In re Patent No. 5340430
Issue Date: August 23,1994
Application No. 07856202
Filed: May 13,1992
Attorney Docket No. 65996-5

:
:DECISION GRANTING PETITION
:UNDER 37 CFR 1.378(c)
:

This is a decision on the electronic petition, filed July 2,2007 ,under 37 CFR 1.378(c) to accept the unintentionally delayed payment of the 11.5 year maintenance fee for the above-identified patent.

The petition is GRANTED.

The maintenance fee is accepted, and the above-identified patent reinstated as of July 2,2007 . This decision also constitutes notice that the fee has been accepted. An electronic copy of the petition and this decision has been created as an entry in an Image File Wrapper. Nevertheless, petitioner should print and retain an independent copy

Telephone inquires related to this electronic decision should be directed to the Electronic Business Center at 1-866-217-9197.

UNITED STATES PATENT AND TRADEMARK OFFICE

Commissioner for Patents
United States Patent and Trademark Office
P.O. Box 1450
Alexandria, VA 22313-1450
www.uspto.gov

In re Patent No. 5332157
Issue Date: July 26,1994
Application No. 07865001
Filed: April 8,1992
Attorney Docket No. 197/101

:
:DECISION GRANTING PETITION
:UNDER 37 CFR 1.378(c)
:

This is a decision on the electronic petition, filed May 15,2007 ,under 37 CFR 1.378(c) to accept the unintentionally delayed payment of the 11.5 year maintenance fee for the above-identified patent.

The petition is GRANTED.

The maintenance fee is accepted, and the above-identified patent reinstated as of May 15,2007 . This decision also constitutes notice that the fee has been accepted. An electronic copy of the petition and this decision has been created as an entry in an Image File Wrapper. Nevertheless, petitioner should print and retain an independent copy

Telephone inquires related to this electronic decision should be directed to the Electronic Business Center at 1-866-217-9197.

Under the Paperwork Reduction Act of 1995, no persons are required to respond to a collection of information unless it displays valid OMB control number.

PETITION TO ACCEPT UNINTENTIONALLY DELAYED PAYMENT OF MAINTENANCE FEE IN AN EXPIRED PATENT (37 CFR 1.378(c))

Patent Number	Issue Date (YYYY-MM-DD)	Application Number	Filing Date (YYYY-MM-DD)	Docket Number (if applicable)
5332157	1994-07-26	07/865,001	1992-04-08	197/101

CAUTION: Maintenance fee (and surcharge, if any) payment must correctly identify: (1) the patent number and (2) the application number of the actual U.S. application leading to issuance of that patent to ensure the fee(s) is/are associated with the correct patent. 37 CFR 1.366(c) and (d).

SMALL ENTITY
☒ Patentee claims, or has previously claimed, small entity status. See 37 CFR 1.27.

LOSS OF ENTITLEMENT TO SMALL ENTITY STATUS
☐ Patentee is no longer entitled to small entity status. See 37 CFR 1.27(g)

NOT Small Entity			Small Entity		
	Fee	Code		Fee	Code
○	3 ½ year	(1551)	○	3 ½ year	(2551)
○	7 ½ year	(1552)	○	7 ½ year	(2552)
○	11 ½ year	(1553)	◉	11 ½ year	(2553)

SURCHARGE
The surcharge required by 37 CFR 1.20(i)(2) (Fee Code 1558) must be paid as a condition of accepting unintentionally delayed payment of the maintenance fee.

MAINTENANCE FEE (37 CFR 1.20(e)-(g))
The appropriate maintenance fee must be submitted with this petition.

STATEMENT
THE UNDERSIGNED CERTIFIES THAT THE DELAY IN PAYMENT OF THE MAINTENANCE FEE TO THIS PATENT WAS UNINTENTIONAL

PETITIONER(S) REQUEST THAT THE DELAYED PAYMENT OF THE MAINTENANCE FEE BE ACCEPTED AND THE PATENT REINSTATED

THIS PORTION MUST BE COMPLETED BY THE SIGNATORY OR SIGNATORIES

37 CFR 1.378(d) states: "Any petition under this section must be signed by an attorney or agent registered to practice before the Patent and Trademark Office, or by the patentee, the assignee, or other party in interest."

I certify, in accordance with 37 CFR 1.4(d)(4) that I am

○ An attorney or agent registered to practice before the Patent and Trademark Office

○ A sole patentee

○ A joint patentee; I certify that I am authorized to sign this submission on behalf of all the other patentees.

○ A joint patentee; all of whom are signing this e-petition

◉ The assignee of record of the entire interest

The Assignee of record of the entire interest			
Under 37 CFR 3.71 an assignee becomes of record by filing a statement in compliance with 37 CFR 3.73(b). Signature requirements are set forth in 37 CFR 1.4(d), and the undersigned certifies that he / she is empowered to act on behalf of the assignee of the entire interest			
Signature	/Walter R. Foster/	Date (YYYY-MM-DD)	2007-05-15
Name	Walter R. Foster		
Enter Reel and Frame Number		Remove	
Reel Number	006404	Frame Number	0453
Click ADD for additional Reel Number and Frame Number		Add	

This collection of information is required by 37 CFR 1.378(c). The information is required to obtain or retain a benefit by the public which is to file (and by the USPTO to process) an application. Confidentiality is governed by 35 U.S.C. 122 and 37 CFR 1.11 and 1.14. This collection is estimated to take 1 hour to complete, including gathering, preparing, and submitting the completed application form to the USPTO. Time will vary depending upon the individual case. Any comments on the amount of time you require to complete this form and/ or suggestions for reducing this burden, should be sent to the Chief Information Officer, U.S. Patent and Trademark Office, U.S. Department of Commerce, P.O. Box 1450, Alexandria, VA 22313-1450. DO NOT SEND FEES OR COMPLETED FORMS TO THIS ADDRESS. **This form can only be used when in conjunction with EFS-Web. If this form is mailed to the USPTO, it may cause delays in reinstating the patent.**

Privacy Act Statement

The Privacy Act of 1974 (P.L. 93-579) requires that you be given certain information in connection with your submission of the attached form related to a patent application or patent. Accordingly, pursuant to the requirements of the Act, please be advised that: (1) the general authority for the collection of this information is 35 U.S.C. 2(b)(2); (2) furnishing of the information solicited is voluntary; and (3) the principal purpose for which the information is used by the U.S. Patent and Trademark Office is to process and/or examine your submission related to a patent application or patent. If you do not furnish the requested information, the U.S. Patent and Trademark Office may not be able to process and/or examine your submission, which may result in termination of proceedings or abandonment of the application or expiration of the patent.

The information provided by you in this form will be subject to the following routine uses:

1. The information on this form will be treated confidentially to the extent allowed under the Freedom of Information Act (5 U.S.C. 552) and the Privacy Act (5 U.S.C. 552a). Records from this system of records may be disclosed to the Department of Justice to determine whether the Freedom of Information Act requires disclosure of these record s.

2. A record from this system of records may be disclosed, as a routine use, in the course of presenting evidence to a court, magistrate, or administrative tribunal, including disclosures to opposing counsel in the course of settlement negotiations.

3. A record in this system of records may be disclosed, as a routine use, to a Member of Congress submitting a request involving an individual, to whom the record pertains, when the individual has requested assistance from the Member with respect to the subject matter of the record.

4. A record in this system of records may be disclosed, as a routine use, to a contractor of the Agency having need for the information in order to perform a contract. Recipients of information shall be required to comply with the requirements of the Privacy Act of 1974, as amended, pursuant to 5 U.S.C. 552a(m).

5. A record related to an International Application filed under the Patent Cooperation Treaty in this system of records may be disclosed, as a routine use, to the International Bureau of the World Intellectual Property Organization, pursuant to the Patent Cooperation Treaty.

6. A record in this system of records may be disclosed, as a routine use, to another federal agency for purposes of National Security review (35 U.S.C. 181) and for review pursuant to the Atomic Energy Act (42 U.S.C. 218(c)).

7. A record from this system of records may be disclosed, as a routine use, to the Administrator, General Services, or his/her designee, during an inspection of records conducted by GSA as part of that agency's responsibility to recommend improvements in records management practices and programs, under authority of 44 U.S.C. 2904 and 2906. Such disclosure shall be made in accordance with the GSA regulations governing inspection of records for this purpose, and any other relevant (i.e., GSA or Commerce) directive. Such disclosure shall not be used to make determinations about individuals.

8. A record from this system of records may be disclosed, as a routine use, to the public after either publication of the application pursuant to 35 U.S.C. 122(b) or issuance of a patent pursuant to 35 U.S.C. 151. Further, a record may be disclosed, subject to the limitations of 37 CFR 1.14, as a routine use, to the public if the record was filed in an application which became abandoned or in which the proceedings were terminated and which application is referenced by either a published application, an application open to public inspections or an issued patent.

9. A record from this system of records may be disclosed, as a routine use, to a Federal, State, or local law enforcement agency, if the USPTO becomes aware of a violation or potential violation of law or regulation.

UNITED STATES PATENT AND TRADEMARK OFFICE

Commissioner for Patents
United States Patent and Trademark Office
P.O. Box 1450
Alexandria, VA 22313-1450
www.uspto.gov

THOMAS A. GALLAGHER
100 Green Street, 3RD Floor
San Francisco, CA. 94111-1302

COPY MAILED

MAR 30 2009

OFFICE OF PETITIONS

In re Patent No. 5,428,398	:	
Issue Date: June 27, 1995	:	
Application No. 07/866,825	:	DECISION ON PETITION
Filed: April 10, 1992	:	
Inventor: Yves C. Faroudja	:	

This is a decision on the petitions, filed August 15, 2008, and October 7, 2008, pursuant to 37 CFR §§ 1.59(b), and 1.183. The petition is being treated as a petition under 37 CFR §1.182 to invalidate an assignment previously recorded against the above-identified patent.

The petition under 37 CFR § 1.183 is **dismissed as premature**.

The petition under 37 CFR § 1.182 is **dismissed**.

Any reply must be submitted within TWO MONTHS from the mail date of this decision. Extensions of time under 37 CFR § 1.136(a) are permitted. This is not a final agency action within the meaning of 5 U.S.C. § 704.

Petitioner has requested that the assignment record be amended to reflect that petitioner is the true owner of the above-noted patent. In particular petitioner requests expungement of purportedly erroneous assignment documents at Reel 020817, Frame 0243, so that petitioner Yves C. Faroudja, may be identified as the true and correct owner of the '385 patent. Petitioner submits that the assignment submitted on April 9, 2008 was submitted with an improper document attached and therefore request expungement of the assignment.

A review of the complete file history in this case indicates that there is no petition decision mailed September 19, 2008, as alleged in petitioner's Request for Reconsideration under 37 CFR § 1.183. Hence the petition under 37 CFR § 1.183 petition is dismissed as being premature.

As discussed in section 323.01(d) of the Manual of Patent Examining Procedure (MPEP), petitions to correct, modify or "expunge" assignment records are granted only if the petitioner can prove that:

(A) the normal corrective procedures outlined in MPEP § 323.01(a) through § 323.01(c) will not provide the petitioner with adequate relief; and

(B) the integrity of the assignment records will not be affected by granting the petition.

Petitioner has not proven either item A or B.

In regard to item A, there is no evidence of record that petitioner has attempted or considered any of the corrective procedures outlined in MPEP § 323.01(a) through § 323.01(c). Also, there is no explanation of record as to why none of these procedures would provide adequate relief.

Petitioner seeks an extraordinary remedy, properly addressed under 37 CFR § 1.182. The USPTO will not normally resort to an extraordinary remedy under 37 CFR § 1.182 if the rules of practice and the procedures before the USPTO already provide an avenue for the requested relief. See Cantello v. Rasmussen, 220 USPQ 664, (Comm'r Pats. 1982).

As background, the USPTO simply acts in a ministerial capacity in recording documents that have been submitted for recordation. See 35 USC 261 and 37 CFR § 3.11. However, the recording of a document pursuant to 37 CFR § 3.11 is **not** a determination by the USPTO of the validity of the document *per se* or the effect that document has on the title to a patent or application. See 37 CFR § 3.54. Moreover, it is USPTO policy to maintain a complete history of claimed interests in a given property, and, as such, a recorded assignment document will be retained, even if it is subsequently found to be invalid. In re Raney, 24 USPQ2d 1713 (Comm'r Pat. 1992).

As set forth in MPEP 323, an error in a recorded assignment is not corrected by invalidating the previous document, but by simply submitting a "corrective document". The "corrective document" must include 1) a copy of the original assignment document with the corrections made therein. The corrections must be initialed and dated by the party conveying the interest; and 2) a new Recordation Form Cover Sheet (form PTO-1595). The new recordation form cover sheet must identify the submission as a "corrective document" submission and indicate the reel and frame number where the incorrectly recorded assignment document appears. The person signing the new recordation form cover sheet must state that the information provided on the new cover sheet is true and correct and that any copy submitted is a true copy of the original document. The original cover sheet should be submitted with the corrective document. The corrective document will be recorded and given a new reel and frame number and recording date. The recording fee set forth in 37 CFR 1.21(h) is required for each patent application and patent against which the corrective document is being recorded. See MPEP § 302.06. Corrections may be made on the original assignment document, for example, by lining out an incorrect patent or application number in a merger or change of name (see MPEP § 314).

Therefore, the rules of practice and the procedures before the USPTO provide an avenue for the requested relief without relying upon extraordinary measures. As a request for the Office to invalidate an assignment is both extraordinary and contrary to USPTO policy, this petition must be dismissed.

In regard to item B, the statements submitted in support of the petition to expunge fails to establish that expungement will not affect the assignment records in this instance. The

assignment recorded in the USPTO assignment records indicates that Faroudja Laboratories, Inc. has some rights with regard to the above mentioned patent, which suggests that the recordation may have been proper. Petitioner should note that recordation is available for numerous documents related to a patent, not just the assignment of the entire right, title and interest in the patent. See at least MPEP § 313. Moreover, the USPTO does not determine the extent of rights transferred by the assignment papers or any recorded document. Such a determination is made by a court of relevant jurisdiction. No evidence is of record establishing that the assignment was recorded improperly. Absent sufficient evidence to support the requested expungement, the integrity of the assignment records will not be disturbed by the USPTO.

In addition, the petition fee paid is not sufficient. A petition under 37 CFR § 1.182 requires the payment of $400.00. However, only $200.00 has been paid due to the erroneous assumption that the petition was properly filed under 37 CFR § 1.59. A petition under 37 CFR § 1.59 applies to application files, not assignment records. The $200.00 payment has been credited to petitioner's Deposit Account 50-4481. A petition to expunge assignment documents is properly addressed under 37 CFR § 1.182 and a fee of $400.00 is required. As authorized, the required fee of $400.00 has been charged to petitioner's Deposit Account 50-4481.

There is no indication that the person signing the petition was ever given a power of attorney or authorization of agent to prosecute the application. If the person signing the petition desires to receive future correspondence regarding this application, the appropriate power of attorney or authorization of agent must be submitted. A courtesy copy of this decision is being mailed to the person signing the petition; however, all future correspondence will be directed to the address currently of record until appropriate instructions are received.

Telephone inquiries concerning this communication should be directed to the undersigned at (571)272-0602.

Thurman K. Page
Petitions Examiner
Office of Petitions

cc: Michael J. Ferrazaro
P.O. Box 1687
Cupertino, CA 95015-1687

UNITED STATES PATENT AND TRADEMARK OFFICE

OIPE IAP20
APR 0 9 2009
PATENT & TRADEMARK OFFICE

Commissioner for Patents
United States Patent and Trademark Office
P.O. Box 1450
Alexandria, VA 22313-1450
www.uspto.gov

THOMAS A. GALLAGHER
100 Green Street, 3RD Floor
San Francisco, CA. 94111-1302

COPY MAILED
MAR 3 0 2009
OFFICE OF PETITIONS

In re Patent No. 5,428,398	:	
Issue Date: June 27, 1995	:	
Application No. 07/866,825	:	DECISION ON PETITION
Filed: April 10, 1992	:	
Inventor: Yves C. Faroudja	:	

This is a decision on the petitions, filed August 15, 2008, and October 7, 2008, pursuant to 37 CFR §§ 1.59(b), and 1.183. The petition is being treated as a petition under 37 CFR §1.182 to invalidate an assignment previously recorded against the above-identified patent.

The petition under 37 CFR § 1.183 is **dismissed as premature.**

COMPLETED

The petition under 37 CFR § 1.182 is **dismissed.**

Any reply must be submitted within TWO MONTHS from the mail date of this decision. Extensions of time under 37 CFR § 1.136(a) are permitted. This is not a final agency action within the meaning of 5 U.S.C. § 704.

Petitioner has requested that the assignment record be amended to reflect that petitioner is the true owner of the above-noted patent. In particular petitioner requests expungement of purportedly erroneous assignment documents at Reel 020817, Frame 0243, so that petitioner Yves C. Faroudja, may be identified as the true and correct owner of the '385 patent. Petitioner submits that the assignment submitted on April 9, 2008 was submitted with an improper document attached and therefore request expungement of the assignment.

A review of the complete file history in this case indicates that there is no petition decision mailed September 19, 2008, as alleged in petitioner's Request for Reconsideration under 37 CFR § 1.183. Hence the petition under 37 CFR § 1.183 petition is dismissed as being premature.

As discussed in section 323.01(d) of the Manual of Patent Examining Procedure (MPEP), petitions to correct, modify or "expunge" assignment records are granted only if the petitioner can prove that:

(A) the normal corrective procedures outlined in MPEP § 323.01(a) through § 323.01(c) will not provide the petitioner with adequate relief; and

(B) the integrity of the assignment records will not be affected by granting the petition.

Petitioner has not proven either item A or B.

In regard to item A, there is no evidence of record that petitioner has attempted or considered any of the corrective procedures outlined in MPEP § 323.01(a) through § 323.01(c). Also, there is no explanation of record as to why none of these procedures would provide adequate relief.

Petitioner seeks an extraordinary remedy, properly addressed under 37 CFR § 1.182. The USPTO will not normally resort to an extraordinary remedy under 37 CFR § 1.182 if the rules of practice and the procedures before the USPTO already provide an avenue for the requested relief. See Cantello v. Rasmussen, 220 USPQ 664, (Comm'r Pats. 1982).

As background, the USPTO simply acts in a ministerial capacity in recording documents that have been submitted for recordation. See 35 USC 261 and 37 CFR § 3.11. However, the recording of a document pursuant to 37 CFR § 3.11 is **not** a determination by the USPTO of the validity of the document *per se* or the effect that document has on the title to a patent or application. See 37 CFR § 3.54. Moreover, it is USPTO policy to maintain a complete history of claimed interests in a given property, and, as such, a recorded assignment document will be retained, even if it is subsequently found to be invalid. In re Raney, 24 USPQ2d 1713 (Comm'r Pat. 1992).

As set forth in MPEP 323, an error in a recorded assignment is not corrected by invalidating the previous document, but by simply submitting a "corrective document". The "corrective document" must include 1) a copy of the original assignment document with the corrections made therein. The corrections must be initialed and dated by the party conveying the interest; and 2) a new Recordation Form Cover Sheet (form PTO-1595). The new recordation form cover sheet must identify the submission as a "corrective document" submission and indicate the reel and frame number where the incorrectly recorded assignment document appears. The person signing the new recordation form cover sheet must state that the information provided on the new cover sheet is true and correct and that any copy submitted is a true copy of the original document. The original cover sheet should be submitted with the corrective document. The corrective document will be recorded and given a new reel and frame number and recording date. The recording fee set forth in 37 CFR 1.21(h) is required for each patent application and patent against which the corrective document is being recorded. See MPEP § 302.06. Corrections may be made on the original assignment document, for example, by lining out an incorrect patent or application number in a merger or change of name (see MPEP § 314).

Therefore, the rules of practice and the procedures before the USPTO provide an avenue for the requested relief without relying upon extraordinary measures. As a request for the Office to invalidate an assignment is both extraordinary and contrary to USPTO policy, this petition must be dismissed.

In regard to item B, the statements submitted in support of the petition to expunge fails to establish that expungement will not affect the assignment records in this instance. The

assignment recorded in the USPTO assignment records indicates that Faroudja Laboratories, Inc. has some rights with regard to the above mentioned patent, which suggests that the recordation may have been proper. Petitioner should note that recordation is available for numerous documents related to a patent, not just the assignment of the entire right, title and interest in the patent. See at least MPEP § 313. Moreover, the USPTO does not determine the extent of rights transferred by the assignment papers or any recorded document. Such a determination is made by a court of relevant jurisdiction. No evidence is of record establishing that the assignment was recorded improperly. Absent sufficient evidence to support the requested expungement, the integrity of the assignment records will not be disturbed by the USPTO.

In addition, the petition fee paid is not sufficient. A petition under 37 CFR § 1.182 requires the payment of $400.00. However, only $200.00 has been paid due to the erroneous assumption that the petition was properly filed under 37 CFR § 1.59. A petition under 37 CFR § 1.59 applies to application files, not assignment records. The $200.00 payment has been credited to petitioner's Deposit Account 50-4481. A petition to expunge assignment documents is properly addressed under 37 CFR § 1.182 and a fee of $400.00 is required. As authorized, the required fee of $400.00 has been charged to petitioner's Deposit Account 50-4481.

There is no indication that the person signing the petition was ever given a power of attorney or authorization of agent to prosecute the application. If the person signing the petition desires to receive future correspondence regarding this application, the appropriate power of attorney or authorization of agent must be submitted. A courtesy copy of this decision is being mailed to the person signing the petition; however, all future correspondence will be directed to the address currently of record until appropriate instructions are received.

Telephone inquiries concerning this communication should be directed to the undersigned at (571)272-0602.

Thurman K. Page

Thurman K. Page
Petitions Examiner
Office of Petitions

cc: Michael J. Ferrazaro
P.O. Box 1687
Cupertino, CA 95015-1687

Under the Paperwork Reduction Act of 1995, no persons are required to respond to a collection of information unless it displays valid OMB control number.

PETITION TO ACCEPT UNINTENTIONALLY DELAYED PAYMENT OF MAINTENANCE FEE IN AN EXPIRED PATENT (37 CFR 1.378(c))

Patent Number	Issue Date (YYYY-MM-DD)	Application Number	Filing Date (YYYY-MM-DD)	Docket Number (if applicable)
5387176	1995-02-07	07867362	1992-04-13	ID036007

CAUTION: Maintenance fee (and surcharge, if any) payment must correctly identify: (1) the patent number and (2) the application number of the actual U.S. application leading to issuance of that patent to ensure the fee(s) is/are associated with the correct patent. 37 CFR 1.366(c) and (d).

SMALL ENTITY
☒ Patentee claims, or has previously claimed, small entity status. See 37 CFR 1.27.

LOSS OF ENTITLEMENT TO SMALL ENTITY STATUS
☐ Patentee is no longer entitled to small entity status. See 37 CFR 1.27(g)

NOT Small Entity			Small Entity		
	Fee	Code		Fee	Code
○	3 ½ year	(1551)	○	3 ½ year	(2551)
○	7 ½ year	(1552)	○	7 ½ year	(2552)
○	11 ½ year	(1553)	◉	11 ½ year	(2553)

SURCHARGE
The surcharge required by 37 CFR 1.20(i)(2) (Fee Code 1558) must be paid as a condition of accepting unintentionally delayed payment of the maintenance fee.

MAINTENANCE FEE (37 CFR 1.20(e)-(g))
The appropriate maintenance fee must be submitted with this petition.

STATEMENT
THE UNDERSIGNED CERTIFIES THAT THE DELAY IN PAYMENT OF THE MAINTENANCE FEE TO THIS PATENT WAS UNINTENTIONAL

PETITIONER(S) REQUEST THAT THE DELAYED PAYMENT OF THE MAINTENANCE FEE BE ACCEPTED AND THE PATENT REINSTATED

THIS PORTION MUST BE COMPLETED BY THE SIGNATORY OR SIGNATORIES

37 CFR 1.378(d) states: "Any petition under this section must be signed by an attorney or agent registered to practice before the Patent and Trademark Office, or by the patentee, the assignee, or other party in interest."

I certify, in accordance with 37 CFR 1.4(d)(4) that I am

◉ An attorney or agent registered to practice before the Patent and Trademark Office

○ A sole patentee

○ A joint patentee; I certify that I am authorized to sign this submission on behalf of all the other patentees.

○ A joint patentee; all of whom are signing this e-petition

○ The assignee of record of the entire interest

Patent Practitioner			
A signature of the applicant or representative is required in accordance with 37 CFR 1.33 and 10.18. Please see 37 CFR 1.4(d) for the form of the signature			
Signature	/DJCushing/	Date (YYYY-MM-DD)	2007-07-02
Name	David J. Cushing	Registration Number	28703

This collection of information is required by 37 CFR 1.378(c). The information is required to obtain or retain a benefit by the public which is to file (and by the USPTO to process) an application. Confidentiality is governed by 35 U.S.C. 122 and 37 CFR 1.11 and 1.14. This collection is estimated to take 1 hour to complete, including gathering, preparing, and submitting the completed application form to the USPTO. Time will vary depending upon the individual case. Any comments on the amount of time you require to complete this form and/ or suggestions for reducing this burden, should be sent to the Chief Information Officer, U.S. Patent and Trademark Office, U.S. Department of Commerce, P.O. Box 1450, Alexandria, VA 22313-1450. DO NOT SEND FEES OR COMPLETED FORMS TO THIS ADDRESS. **This form can only be used when in conjunction with EFS-Web. If this form is mailed to the USPTO, it may cause delays in reinstating the patent.**

Privacy Act Statement

The Privacy Act of 1974 (P.L. 93-579) requires that you be given certain information in connection with your submission of the attached form related to a patent application or patent. Accordingly, pursuant to the requirements of the Act, please be advised that: (1) the general authority for the collection of this information is 35 U.S.C. 2(b)(2); (2) furnishing of the information solicited is voluntary; and (3) the principal purpose for which the information is used by the U.S. Patent and Trademark Office is to process and/or examine your submission related to a patent application or patent. If you do not furnish the requested information, the U.S. Patent and Trademark Office may not be able to process and/or examine your submission, which may result in termination of proceedings or abandonment of the application or expiration of the patent.

The information provided by you in this form will be subject to the following routine uses:

1. The information on this form will be treated confidentially to the extent allowed under the Freedom of Information Act (5 U.S.C. 552) and the Privacy Act (5 U.S.C. 552a). Records from this system of records may be disclosed to the Department of Justice to determine whether the Freedom of Information Act requires disclosure of these record s.

2. A record from this system of records may be disclosed, as a routine use, in the course of presenting evidence to a court, magistrate, or administrative tribunal, including disclosures to opposing counsel in the course of settlement negotiations.

3. A record in this system of records may be disclosed, as a routine use, to a Member of Congress submitting a request involving an individual, to whom the record pertains, when the individual has requested assistance from the Member with respect to the subject matter of the record.

4. A record in this system of records may be disclosed, as a routine use, to a contractor of the Agency having need for the information in order to perform a contract. Recipients of information shall be required to comply with the requirements of the Privacy Act of 1974, as amended, pursuant to 5 U.S.C. 552a(m).

5. A record related to an International Application filed under the Patent Cooperation Treaty in this system of records may be disclosed, as a routine use, to the International Bureau of the World Intellectual Property Organization, pursuant to the Patent Cooperation Treaty.

6. A record in this system of records may be disclosed, as a routine use, to another federal agency for purposes of National Security review (35 U.S.C. 181) and for review pursuant to the Atomic Energy Act (42 U.S.C. 218(c)).

7. A record from this system of records may be disclosed, as a routine use, to the Administrator, General Services, or his/her designee, during an inspection of records conducted by GSA as part of that agency's responsibility to recommend improvements in records management practices and programs, under authority of 44 U.S.C. 2904 and 2906. Such disclosure shall be made in accordance with the GSA regulations governing inspection of records for this purpose, and any other relevant (i.e., GSA or Commerce) directive. Such disclosure shall not be used to make determinations about individuals.

8. A record from this system of records may be disclosed, as a routine use, to the public after either publication of the application pursuant to 35 U.S.C. 122(b) or issuance of a patent pursuant to 35 U.S.C. 151. Further, a record may be disclosed, subject to the limitations of 37 CFR 1.14, as a routine use, to the public if the record was filed in an application which became abandoned or in which the proceedings were terminated and which application is referenced by either a published application, an application open to public inspections or an issued patent.

9. A record from this system of records may be disclosed, as a routine use, to a Federal, State, or local law enforcement agency, if the USPTO becomes aware of a violation or potential violation of law or regulation.

UNITED STATES PATENT AND TRADEMARK OFFICE

Commissioner for Patents
United States Patent and Trademark Office
P.O. Box 1450
Alexandria, VA 22313-1450
www.uspto.gov

In re Patent No. 5387176
Issue Date: February 7,1995
Application No. 07867362
Filed: April 13,1992
Attorney Docket No. 1-MTI-CIP

:DECISION GRANTING PETITION
:UNDER 37 CFR 1.378(c)

This is a decision on the electronic petition, filed July 2,2007 ,under 37 CFR 1.378(c) to accept the unintentionally delayed payment of the 11.5 year maintenance fee for the above-identified patent.

The petition is GRANTED.

The maintenance fee is accepted, and the above-identified patent reinstated as of July 2,2007 . This decision also constitutes notice that the fee has been accepted. An electronic copy of the petition and this decision has been created as an entry in an Image File Wrapper. Nevertheless, petitioner should print and retain an independent copy

Telephone inquires related to this electronic decision should be directed to the Electronic Business Center at 1-866-217-9197.

UNITED STATES DEPARTMENT OF COMMERCE
Patent and Trademark Office
ASSISTANT SECRETARY AND COMMISSIONER
OF PATENTS AND TRADEMARKS
Washington, DC 20231

MAILED
APR 26 2000
Office of Director
Technology Center 1600

RJH
Paper No. 45

In re Application of:
HARLEY, JOHN B.
Serial No.: 07/867,819
Filed: April 13, 1992
For: Peptide Reagents for Diagnosis
Of Autoantibodies

DECISION ON PETITION

This is a decision on the petition, filed December 2, 1998. The petition, while being titled "Petition to Revive", has been treated here as a petition to withdraw the holding of abandonment under the provisions of 37 CFR 1.181. The delay in answering that petition is sincerely regretted.

On December 2, 1996, a non-final Office action was mailed to applicant. On that same day, applicant filed a paper. On October 31, 1997, a notice of abandonment was mailed to applicant which indicated that the application was abandoned for failure to respond to the December 2, 1996 Office action. In accordance with the petition, the notice of abandonment was received on November 7, 1997. On December 2, 1998, the present petition was filed.

Petitioner asserted that the December 2, 1996 paper that was filed by applicant constituted a response to the December 2, 1996 Office action. From this, petitioner concluded that the application was abandoned through inadvertent error by the Patent Office and, therefore, the abandonment should be withdrawn.

Petitioner's assertions are not persuasive for several reasons. First, 37 CFR 1.181(f) indicates that any petition not filed within 2 months from the action complained of may be considered untimely. Here, the petition was filed more than one year after the notice of abandonment was mailed and received. The petitioner indicated that after the notice of abandonment was received, phone calls were made to the Office to determine the status of the application. However, since the notice of abandonment was received on November 7, 1997 as admitted in the petition, the status of the application should have been clear. Thus, any petition to withdraw the holding of abandonment under 37 CFR 1.181 due to Office error should have been filed within two months from that date. For this reason, the petition is untimely. Second, it does not make sense to consider the paper filed on December 2, 1996 as a response to the Office action which was mailed on the same date. Clearly applicant could not have received the Office action, prepared a response, and filed the response all on the same day the Office action was mailed. As noted in

the petition, the December 2, 1996 paper was filed in response to a telephone conversation with the examiner, not in response to the Office action. Third, the December 2, 1996 paper fails to address the 35 U.S.C. 112, second paragraph, rejection or the 35 U.S.C. 112, first paragraph, written description, rejection of the December 2, 1996 Office action. Furthermore, even if the Office action and the paper crossed in the mail, there is no PTO policy requiring a supplemental Office action, especially when the rejections made in the Office action still applied to the claims even as amended. Thus, applicant had an obligation to respond to the December 2, 1996 Office action.

In summary, for the reasons set forth above, the petition is untimely and the December 2, 1996 paper is not considered a response to the December 2, 1996 Office action. Since no response was filed, the application was appropriately abandoned. Accordingly, the petition is hereby denied.

PETITION DENIED.

Note, the application has been forwarded to the Office of Petitions for treatment of the petition as a petition to revive an abandoned application.

John Doll

John Doll, Director
Technology Center 1600

PATREA L. PABST, ESQ.
ARNALL, GOLDEN, AND GREGORY
2800 ONE ATLANTIC CENTER
1201 WEST PEACHTREE STREET
ATLANTA, GA 30309-340

UNITED STATES PATENT AND TRADEMARK OFFICE

Under Secretary of Commerce for Intellectual Property and
Director of the United States Patent and Trademark Office
Washington, D.C. 20231
www.uspto.gov

FEB 13 2002

Paper No. 46

Patrea Pabst
HOLLAND & KNIGHT LLP
2000 One Atlantic Center
1201 West Peachtree Street
Atlanta, Georgia 30309-3400

In re Application of
John HARLEY
Application No. 07/867,819
Filed: April 13, 1992
Attorney Docket No. OMRF 114 CIP(2)

DECISION
ON PETITION
37 CFR 1.181

This is a decision on the petition filed January 22, 2002, which is being treated as request for reconsideration of the decision on petition under 37 CFR 1.181 mailed April 26, 2000, requesting withdrawal of the holding of abandonment in the above-identified application.

The petition is GRANTED.

A review of the record shows a response was filed December 2, 1996 which crossed in the mail with the Official Action mailed on that same date. The filing of the response would have been sufficient to restart the shortened statutory period for response once a supplemental official action was mailed by the Examiner. However, the record does not reflect that such an action was issued by the Examiner.

The instant application is being returned to art unit 1642 for consideration of the amendment filed December 2, 1996.

Inquiries regarding this communication may be directed to the undersigned at (703) 308-1123.

John J. Doll
Patent Examining Group Director
Technology Center 1600

Under the Paperwork Reduction Act of 1995, no persons are required to respond to a collection of information unless it displays valid OMB control number.

PETITION TO ACCEPT UNINTENTIONALLY DELAYED PAYMENT OF MAINTENANCE FEE IN AN EXPIRED PATENT (37 CFR 1.378(c))

Patent Number	Issue Date (YYYY-MM-DD)	Application Number	Filing Date (YYYY-MM-DD)	Docket Number (if applicable)
5243718	1993-09-14	07868452	1992-04-14	501/1/ADM

CAUTION: Maintenance fee (and surcharge, if any) payment must correctly identify: (1) the patent number and (2) the application number of the actual U.S. application leading to issuance of that patent to ensure the fee(s) is/are associated with the correct patent. 37 CFR 1.366(c) and (d).

SMALL ENTITY
☒ Patentee claims, or has previously claimed, small entity status. See 37 CFR 1.27.

LOSS OF ENTITLEMENT TO SMALL ENTITY STATUS
☐ Patentee is no longer entitled to small entity status. See 37 CFR 1.27(g)

NOT Small Entity			Small Entity		
	Fee	Code		Fee	Code
○	3 ½ year	(1551)	○	3 ½ year	(2551)
○	7 ½ year	(1552)	○	7 ½ year	(2552)
○	11 ½ year	(1553)	◉	11 ½ year	(2553)

SURCHARGE
The surcharge required by 37 CFR 1.20(i)(2) (Fee Code 1558) must be paid as a condition of accepting unintentionally delayed payment of the maintenance fee.

MAINTENANCE FEE (37 CFR 1.20(e)-(g))
The appropriate maintenance fee must be submitted with this petition.

STATEMENT
THE UNDERSIGNED CERTIFIES THAT THE DELAY IN PAYMENT OF THE MAINTENANCE FEE TO THIS PATENT WAS UNINTENTIONAL

PETITIONER(S) REQUEST THAT THE DELAYED PAYMENT OF THE MAINTENANCE FEE BE ACCEPTED AND THE PATENT REINSTATED

THIS PORTION MUST BE COMPLETED BY THE SIGNATORY OR SIGNATORIES

37 CFR 1.378(d) states: "Any petition under this section must be signed by an attorney or agent registered to practice before the Patent and Trademark Office, or by the patentee, the assignee, or other party in interest."

I certify, in accordance with 37 CFR 1.4(d)(4) that I am

◉ An attorney or agent registered to practice before the Patent and Trademark Office

○ A sole patentee

○ A joint patentee; I certify that I am authorized to sign this submission on behalf of all the other patentees.

○ A joint patentee; all of whom are signing this e-petition

○ The assignee of record of the entire interest

Patent Practitioner			
A signature of the applicant or representative is required in accordance with 37 CFR 1.33 and 10.18. Please see 37 CFR 1.4(d) for the form of the signature			
Signature	/Richard M. Goldberg/	Date (YYYY-MM-DD)	2006-11-05
Name	Richard M. Goldberg	Registration Number	28215

This collection of information is required by 37 CFR 1.378(c). The information is required to obtain or retain a benefit by the public which is to file (and by the USPTO to process) an application. Confidentiality is governed by 35 U.S.C. 122 and 37 CFR 1.11 and 1.14. This collection is estimated to take 1 hour to complete, including gathering, preparing, and submitting the completed application form to the USPTO. Time will vary depending upon the individual case. Any comments on the amount of time you require to complete this form and/ or suggestions for reducing this burden, should be sent to the Chief Information Officer, U.S. Patent and Trademark Office, U.S. Department of Commerce, P.O. Box 1450, Alexandria, VA 22313-1450. DO NOT SEND FEES OR COMPLETED FORMS TO THIS ADDRESS. **This form can only be used when in conjunction with EFS-Web. If this form is mailed to the USPTO, it may cause delays in reinstating the patent.**

Privacy Act Statement

The Privacy Act of 1974 (P.L. 93-579) requires that you be given certain information in connection with your submission of the attached form related to a patent application or patent. Accordingly, pursuant to the requirements of the Act, please be advised that: (1) the general authority for the collection of this information is 35 U.S.C. 2(b)(2); (2) furnishing of the information solicited is voluntary; and (3) the principal purpose for which the information is used by the U.S. Patent and Trademark Office is to process and/or examine your submission related to a patent application or patent. If you do not furnish the requested information, the U.S. Patent and Trademark Office may not be able to process and/or examine your submission, which may result in termination of proceedings or abandonment of the application or expiration of the patent.

The information provided by you in this form will be subject to the following routine uses:

1. The information on this form will be treated confidentially to the extent allowed under the Freedom of Information Act (5 U.S.C. 552) and the Privacy Act (5 U.S.C. 552a). Records from this system of records may be disclosed to the Department of Justice to determine whether the Freedom of Information Act requires disclosure of these record s.

2. A record from this system of records may be disclosed, as a routine use, in the course of presenting evidence to a court, magistrate, or administrative tribunal, including disclosures to opposing counsel in the course of settlement negotiations.

3. A record in this system of records may be disclosed, as a routine use, to a Member of Congress submitting a request involving an individual, to whom the record pertains, when the individual has requested assistance from the Member with respect to the subject matter of the record.

4. A record in this system of records may be disclosed, as a routine use, to a contractor of the Agency having need for the information in order to perform a contract. Recipients of information shall be required to comply with the requirements of the Privacy Act of 1974, as amended, pursuant to 5 U.S.C. 552a(m).

5. A record related to an International Application filed under the Patent Cooperation Treaty in this system of records may be disclosed, as a routine use, to the International Bureau of the World Intellectual Property Organization, pursuant to the Patent Cooperation Treaty.

6. A record in this system of records may be disclosed, as a routine use, to another federal agency for purposes of National Security review (35 U.S.C. 181) and for review pursuant to the Atomic Energy Act (42 U.S.C. 218(c)).

7. A record from this system of records may be disclosed, as a routine use, to the Administrator, General Services, or his/her designee, during an inspection of records conducted by GSA as part of that agency's responsibility to recommend improvements in records management practices and programs, under authority of 44 U.S.C. 2904 and 2906. Such disclosure shall be made in accordance with the GSA regulations governing inspection of records for this purpose, and any other relevant (i.e., GSA or Commerce) directive. Such disclosure shall not be used to make determinations about individuals.

8. A record from this system of records may be disclosed, as a routine use, to the public after either publication of the application pursuant to 35 U.S.C. 122(b) or issuance of a patent pursuant to 35 U.S.C. 151. Further, a record may be disclosed, subject to the limitations of 37 CFR 1.14, as a routine use, to the public if the record was filed in an application which became abandoned or in which the proceedings were terminated and which application is referenced by either a published application, an application open to public inspections or an issued patent.

9. A record from this system of records may be disclosed, as a routine use, to a Federal, State, or local law enforcement agency, if the USPTO becomes aware of a violation or potential violation of law or regulation.

UNITED STATES PATENT AND TRADEMARK OFFICE

Commissioner for Patents
United States Patent and Trademark Office
P.O. Box 1450
Alexandria, VA 22313-1450
www.uspto.gov

In re Patent No. 5243718
Issue Date: September 14,1993
Application No. 07868452
Filed: April 14,1992
Attorney Docket No. U-WP-4858

:
:DECISION GRANTING PETITION
:UNDER 37 CFR 1.378(c)
:

This is a decision on the electronic petition, filed November 5,2006 ,under 37 CFR 1.378(c) to accept the unintentionally delayed payment of the 11.5 year maintenance fee for the above-identified patent.

The petition is GRANTED.

The maintenance fee is accepted, and the above-identified patent reinstated as of November 5,2006 . This decision also constitutes notice that the fee has been accepted. An electronic copy of the petition and this decision has been created as an entry in an Image File Wrapper. Nevertheless, petitioner should print and retain an independent copy

Telephone inquires related to this electronic decision should be directed to the Electronic Business Center at 1-866-217-9197.

UNITED STATES PATENT AND TRADEMARK OFFICE

Commissioner for Patents
United States Patent and Trademark Office
P.O. Box 1450
Alexandria, VA 22313-1450
www.uspto.gov

In re Patent No. 5243718
Issue Date: September 14,1993
Application No. 07868452
Filed: April 14,1992
Attorney Docket No. U-WP-4858

:DECISION GRANTING PETITION
:UNDER 37 CFR 1.378(c)

This is a decision on the electronic petition, filed November 5,2006 ,under 37 CFR 1.378(c) to accept the unintentionally delayed payment of the 11.5 year maintenance fee for the above-identified patent.

The petition is GRANTED.

The maintenance fee is accepted, and the above-identified patent reinstated as of November 5,2006 . This decision also constitutes notice that the fee has been accepted. An electronic copy of the petition and this decision has been created as an entry in an Image File Wrapper. Nevertheless, petitioner should print and retain an independent copy

Telephone inquires related to this electronic decision should be directed to the Electronic Business Center at 1-866-217-9197.

Under the Paperwork Reduction Act of 1995, no persons are required to respond to a collection of information unless it displays valid OMB control number.

PETITION TO ACCEPT UNINTENTIONALLY DELAYED PAYMENT OF MAINTENANCE FEE IN AN EXPIRED PATENT (37 CFR 1.378(c))

Patent Number	Issue Date (YYYY-MM-DD)	Application Number	Filing Date (YYYY-MM-DD)	Docket Number (if applicable)
5201085	1993-04-13	07868468	1992-04-14	501/1/ADM

CAUTION: Maintenance fee (and surcharge, if any) payment must correctly identify: (1) the patent number and (2) the application number of the actual U.S. application leading to issuance of that patent to ensure the fee(s) is/are associated with the correct patent. 37 CFR 1.366(c) and (d).

SMALL ENTITY
☒ Patentee claims, or has previously claimed, small entity status. See 37 CFR 1.27.

LOSS OF ENTITLEMENT TO SMALL ENTITY STATUS
☐ Patentee is no longer entitled to small entity status. See 37 CFR 1.27(g)

NOT Small Entity			Small Entity		
	Fee	Code		Fee	Code
○	3 ½ year	(1551)	○	3 ½ year	(2551)
○	7 ½ year	(1552)	○	7 ½ year	(2552)
○	11 ½ year	(1553)	◉	11 ½ year	(2553)

SURCHARGE
The surcharge required by 37 CFR 1.20(i)(2) (Fee Code 1558) must be paid as a condition of accepting unintentionally delayed payment of the maintenance fee.

MAINTENANCE FEE (37 CFR 1.20(e)-(g))
The appropriate maintenance fee must be submitted with this petition.

STATEMENT
THE UNDERSIGNED CERTIFIES THAT THE DELAY IN PAYMENT OF THE MAINTENANCE FEE TO THIS PATENT WAS UNINTENTIONAL

PETITIONER(S) REQUEST THAT THE DELAYED PAYMENT OF THE MAINTENANCE FEE BE ACCEPTED AND THE PATENT REINSTATED

THIS PORTION MUST BE COMPLETED BY THE SIGNATORY OR SIGNATORIES

37 CFR 1.378(d) states: "Any petition under this section must be signed by an attorney or agent registered to practice before the Patent and Trademark Office, or by the patentee, the assignee, or other party in interest."

I certify, in accordance with 37 CFR 1.4(d)(4) that I am

◉ An attorney or agent registered to practice before the Patent and Trademark Office

○ A sole patentee

○ A joint patentee; I certify that I am authorized to sign this submission on behalf of all the other patentees.

○ A joint patentee; all of whom are signing this e-petition

○ The assignee of record of the entire interest

Patent Practitioner			
A signature of the applicant or representative is required in accordance with 37 CFR 1.33 and 10.18. Please see 37 CFR 1.4(d) for the form of the signature			
Signature	/Richard M. Goldberg/	Date (YYYY-MM-DD)	2006-11-05
Name	Richard M. Goldberg	Registration Number	28215

This collection of information is required by 37 CFR 1.378(c). The information is required to obtain or retain a benefit by the public which is to file (and by the USPTO to process) an application. Confidentiality is governed by 35 U.S.C. 122 and 37 CFR 1.11 and 1.14. This collection is estimated to take 1 hour to complete, including gathering, preparing, and submitting the completed application form to the USPTO. Time will vary depending upon the individual case. Any comments on the amount of time you require to complete this form and/ or suggestions for reducing this burden, should be sent to the Chief Information Officer, U.S. Patent and Trademark Office, U.S. Department of Commerce, P.O. Box 1450, Alexandria, VA 22313-1450. DO NOT SEND FEES OR COMPLETED FORMS TO THIS ADDRESS. **This form can only be used when in conjunction with EFS-Web. If this form is mailed to the USPTO, it may cause delays in reinstating the patent.**

Privacy Act Statement

The Privacy Act of 1974 (P.L. 93-579) requires that you be given certain information in connection with your submission of the attached form related to a patent application or patent. Accordingly, pursuant to the requirements of the Act, please be advised that: (1) the general authority for the collection of this information is 35 U.S.C. 2(b)(2); (2) furnishing of the information solicited is voluntary; and (3) the principal purpose for which the information is used by the U.S. Patent and Trademark Office is to process and/or examine your submission related to a patent application or patent. If you do not furnish the requested information, the U.S. Patent and Trademark Office may not be able to process and/or examine your submission, which may result in termination of proceedings or abandonment of the application or expiration of the patent.

The information provided by you in this form will be subject to the following routine uses:

1. The information on this form will be treated confidentially to the extent allowed under the Freedom of Information Act (5 U.S.C. 552) and the Privacy Act (5 U.S.C. 552a). Records from this system of records may be disclosed to the Department of Justice to determine whether the Freedom of Information Act requires disclosure of these record s.

2. A record from this system of records may be disclosed, as a routine use, in the course of presenting evidence to a court, magistrate, or administrative tribunal, including disclosures to opposing counsel in the course of settlement negotiations.

3. A record in this system of records may be disclosed, as a routine use, to a Member of Congress submitting a request involving an individual, to whom the record pertains, when the individual has requested assistance from the Member with respect to the subject matter of the record.

4. A record in this system of records may be disclosed, as a routine use, to a contractor of the Agency having need for the information in order to perform a contract. Recipients of information shall be required to comply with the requirements of the Privacy Act of 1974, as amended, pursuant to 5 U.S.C. 552a(m).

5. A record related to an International Application filed under the Patent Cooperation Treaty in this system of records may be disclosed, as a routine use, to the International Bureau of the World Intellectual Property Organization, pursuant to the Patent Cooperation Treaty.

6. A record in this system of records may be disclosed, as a routine use, to another federal agency for purposes of National Security review (35 U.S.C. 181) and for review pursuant to the Atomic Energy Act (42 U.S.C. 218(c)).

7. A record from this system of records may be disclosed, as a routine use, to the Administrator, General Services, or his/her designee, during an inspection of records conducted by GSA as part of that agency's responsibility to recommend improvements in records management practices and programs, under authority of 44 U.S.C. 2904 and 2906. Such disclosure shall be made in accordance with the GSA regulations governing inspection of records for this purpose, and any other relevant (i.e., GSA or Commerce) directive. Such disclosure shall not be used to make determinations about individuals.

8. A record from this system of records may be disclosed, as a routine use, to the public after either publication of the application pursuant to 35 U.S.C. 122(b) or issuance of a patent pursuant to 35 U.S.C. 151. Further, a record may be disclosed, subject to the limitations of 37 CFR 1.14, as a routine use, to the public if the record was filed in an application which became abandoned or in which the proceedings were terminated and which application is referenced by either a published application, an application open to public inspections or an issued patent.

9. A record from this system of records may be disclosed, as a routine use, to a Federal, State, or local law enforcement agency, if the USPTO becomes aware of a violation or potential violation of law or regulation.

UNITED STATES PATENT AND TRADEMARK OFFICE

Commissioner for Patents
United States Patent and Trademark Office
P.O. Box 1450
Alexandria, VA 22313-1450
www.uspto.gov

In re Patent No. 5201085
Issue Date: April 13,1993
Application No. 07868468
Filed: April 14,1992
Attorney Docket No. U-WP-4861-SH

:

:DECISION GRANTING PETITION
:UNDER 37 CFR 1.378(c)

:

This is a decision on the electronic petition, filed November 5,2006 ,under 37 CFR 1.378(c) to accept the unintentionally delayed payment of the 11.5 year maintenance fee for the above-identified patent.

The petition is GRANTED.

The maintenance fee is accepted, and the above-identified patent reinstated as of November 5,2006 . This decision also constitutes notice that the fee has been accepted. An electronic copy of the petition and this decision has been created as an entry in an Image File Wrapper. Nevertheless, petitioner should print and retain an independent copy

Telephone inquires related to this electronic decision should be directed to the Electronic Business Center at 1-866-217-9197.

UNITED STATES PATENT AND TRADEMARK OFFICE

Commissioner for Patents
United States Patent and Trademark Office
P.O. Box 1450
Alexandria, VA 22313-1450
www.uspto.gov

In re Patent No. 5201085
Issue Date: April 13,1993
Application No. 07868468
Filed: April 14,1992
Attorney Docket No. U-WP-4861-SH

:DECISION GRANTING PETITION
:UNDER 37 CFR 1.378(c)

This is a decision on the electronic petition, filed November 5,2006 ,under 37 CFR 1.378(c) to accept the unintentionally delayed payment of the 11.5 year maintenance fee for the above-identified patent.

The petition is GRANTED.

The maintenance fee is accepted, and the above-identified patent reinstated as of November 5,2006 . This decision also constitutes notice that the fee has been accepted. An electronic copy of the petition and this decision has been created as an entry in an Image File Wrapper. Nevertheless, petitioner should print and retain an independent copy

Telephone inquires related to this electronic decision should be directed to the Electronic Business Center at 1-866-217-9197.

Under the Paperwork Reduction Act of 1995, no persons are required to respond to a collection of information unless it displays valid OMB control number.

PETITION TO ACCEPT UNINTENTIONALLY DELAYED PAYMENT OF MAINTENANCE FEE IN AN EXPIRED PATENT (37 CFR 1.378(c))

Patent Number	Issue Date (YYYY-MM-DD)	Application Number	Filing Date (YYYY-MM-DD)	Docket Number (if applicable)
5326694	1994-07-05	07871318	1992-04-20	Q29093

CAUTION: Maintenance fee (and surcharge, if any) payment must correctly identify: (1) the patent number and (2) the application number of the actual U.S. application leading to issuance of that patent to ensure the fee(s) is/are associated with the correct patent. 37 CFR 1.366(c) and (d).

SMALL ENTITY
☒ Patentee claims, or has previously claimed, small entity status. See 37 CFR 1.27.

LOSS OF ENTITLEMENT TO SMALL ENTITY STATUS
☐ Patentee is no longer entitled to small entity status. See 37 CFR 1.27(g)

NOT Small Entity			Small Entity		
	Fee	Code		Fee	Code
○	3 ½ year	(1551)	○	3 ½ year	(2551)
○	7 ½ year	(1552)	○	7 ½ year	(2552)
○	11 ½ year	(1553)	◉	11 ½ year	(2553)

SURCHARGE
The surcharge required by 37 CFR 1.20(i)(2) (Fee Code 1558) must be paid as a condition of accepting unintentionally delayed payment of the maintenance fee.

MAINTENANCE FEE (37 CFR 1.20(e)-(g))
The appropriate maintenance fee must be submitted with this petition.

STATEMENT
THE UNDERSIGNED CERTIFIES THAT THE DELAY IN PAYMENT OF THE MAINTENANCE FEE TO THIS PATENT WAS UNINTENTIONAL

PETITIONER(S) REQUEST THAT THE DELAYED PAYMENT OF THE MAINTENANCE FEE BE ACCEPTED AND THE PATENT REINSTATED

THIS PORTION MUST BE COMPLETED BY THE SIGNATORY OR SIGNATORIES

37 CFR 1.378(d) states: "Any petition under this section must be signed by an attorney or agent registered to practice before the Patent and Trademark Office, or by the patentee, the assignee, or other party in interest."

I certify, in accordance with 37 CFR 1.4(d)(4) that I am

◉ An attorney or agent registered to practice before the Patent and Trademark Office

○ A sole patentee

○ A joint patentee; I certify that I am authorized to sign this submission on behalf of all the other patentees.

○ A joint patentee; all of whom are signing this e-petition

○ The assignee of record of the entire interest

Patent Practitioner			
A signature of the applicant or representative is required in accordance with 37 CFR 1.33 and 10.18. Please see 37 CFR 1.4(d) for the form of the signature			
Signature	/David J. Cushing/	Date (YYYY-MM-DD)	2006-10-31
Name	David J. Cushing	Registration Number	28703

This collection of information is required by 37 CFR 1.378(c). The information is required to obtain or retain a benefit by the public which is to file (and by the USPTO to process) an application. Confidentiality is governed by 35 U.S.C. 122 and 37 CFR 1.11 and 1.14. This collection is estimated to take 1 hour to complete, including gathering, preparing, and submitting the completed application form to the USPTO. Time will vary depending upon the individual case. Any comments on the amount of time you require to complete this form and/ or suggestions for reducing this burden, should be sent to the Chief Information Officer, U.S. Patent and Trademark Office, U.S. Department of Commerce, P.O. Box 1450, Alexandria, VA 22313-1450. DO NOT SEND FEES OR COMPLETED FORMS TO THIS ADDRESS. **This form can only be used when in conjunction with EFS-Web. If this form is mailed to the USPTO, it may cause delays in reinstating the patent.**

Privacy Act Statement

The Privacy Act of 1974 (P.L. 93-579) requires that you be given certain information in connection with your submission of the attached form related to a patent application or patent. Accordingly, pursuant to the requirements of the Act, please be advised that: (1) the general authority for the collection of this information is 35 U.S.C. 2(b)(2); (2) furnishing of the information solicited is voluntary; and (3) the principal purpose for which the information is used by the U.S. Patent and Trademark Office is to process and/or examine your submission related to a patent application or patent. If you do not furnish the requested information, the U.S. Patent and Trademark Office may not be able to process and/or examine your submission, which may result in termination of proceedings or abandonment of the application or expiration of the patent.

The information provided by you in this form will be subject to the following routine uses:

1. The information on this form will be treated confidentially to the extent allowed under the Freedom of Information Act (5 U.S.C. 552) and the Privacy Act (5 U.S.C. 552a). Records from this system of records may be disclosed to the Department of Justice to determine whether the Freedom of Information Act requires disclosure of these record s.

2. A record from this system of records may be disclosed, as a routine use, in the course of presenting evidence to a court, magistrate, or administrative tribunal, including disclosures to opposing counsel in the course of settlement negotiations.

3. A record in this system of records may be disclosed, as a routine use, to a Member of Congress submitting a request involving an individual, to whom the record pertains, when the individual has requested assistance from the Member with respect to the subject matter of the record.

4. A record in this system of records may be disclosed, as a routine use, to a contractor of the Agency having need for the information in order to perform a contract. Recipients of information shall be required to comply with the requirements of the Privacy Act of 1974, as amended, pursuant to 5 U.S.C. 552a(m).

5. A record related to an International Application filed under the Patent Cooperation Treaty in this system of records may be disclosed, as a routine use, to the International Bureau of the World Intellectual Property Organization, pursuant to the Patent Cooperation Treaty.

6. A record in this system of records may be disclosed, as a routine use, to another federal agency for purposes of National Security review (35 U.S.C. 181) and for review pursuant to the Atomic Energy Act (42 U.S.C. 218(c)).

7. A record from this system of records may be disclosed, as a routine use, to the Administrator, General Services, or his/her designee, during an inspection of records conducted by GSA as part of that agency's responsibility to recommend improvements in records management practices and programs, under authority of 44 U.S.C. 2904 and 2906. Such disclosure shall be made in accordance with the GSA regulations governing inspection of records for this purpose, and any other relevant (i.e., GSA or Commerce) directive. Such disclosure shall not be used to make determinations about individuals.

8. A record from this system of records may be disclosed, as a routine use, to the public after either publication of the application pursuant to 35 U.S.C. 122(b) or issuance of a patent pursuant to 35 U.S.C. 151. Further, a record may be disclosed, subject to the limitations of 37 CFR 1.14, as a routine use, to the public if the record was filed in an application which became abandoned or in which the proceedings were terminated and which application is referenced by either a published application, an application open to public inspections or an issued patent.

9. A record from this system of records may be disclosed, as a routine use, to a Federal, State, or local law enforcement agency, if the USPTO becomes aware of a violation or potential violation of law or regulation.

UNITED STATES PATENT AND TRADEMARK OFFICE

Commissioner for Patents
United States Patent and Trademark Office
P.O. Box 1450
Alexandria, VA 22313-1450
www.uspto.gov

In re Patent No. 5326694
Issue Date: July 5,1994
Application No. 07871318
Filed: April 20,1992
Attorney Docket No. Q-29093

:
:DECISION GRANTING PETITION
:UNDER 37 CFR 1.378(c)
:

This is a decision on the electronic petition, filed October 31,2006 ,under 37 CFR 1.378(c) to accept the unintentionally delayed payment of the 11.5 year maintenance fee for the above-identified patent.

The petition is GRANTED.

The maintenance fee is accepted, and the above-identified patent reinstated as of October 31,2006 . This decision also constitutes notice that the fee has been accepted. An electronic copy of the petition and this decision has been created as an entry in an Image File Wrapper. Nevertheless, petitioner should print and retain an independent copy

Telephone inquires related to this electronic decision should be directed to the Electronic Business Center at 1-866-217-9197.

Approved for use through 04/30/2009. OMB 0651-0016
U.S. Patent and Trademark Office: U.S. DEPARTMENT OF COMMERCE
Under the Paperwork Reduction Act of 1995, no persons are required to respond to a collection of information unless it displays valid OMB control number.

PETITION TO ACCEPT UNINTENTIONALLY DELAYED PAYMENT OF MAINTENANCE FEE IN AN EXPIRED PATENT (37 CFR 1.378(c))

Patent Number	Issue Date (YYYY-MM-DD)	Application Number	Filing Date (YYYY-MM-DD)	Docket Number (if applicable)
5279248	1994-01-18	07871631	1992-04-20	B194 0001/BMG

CAUTION: Maintenance fee (and surcharge, if any) payment must correctly identify: (1) the patent number and (2) the application number of the actual U.S. application leading to issuance of that patent to ensure the fee(s) is/are associated with the correct patent. 37 CFR 1.366(c) and (d).

SMALL ENTITY
☒ Patentee claims, or has previously claimed, small entity status. See 37 CFR 1.27.

LOSS OF ENTITLEMENT TO SMALL ENTITY STATUS
☐ Patentee is no longer entitled to small entity status. See 37 CFR 1.27(g)

NOT Small Entity			Small Entity		
	Fee	Code		Fee	Code
○	3 ½ year	(1551)	○	3 ½ year	(2551)
○	7 ½ year	(1552)	○	7 ½ year	(2552)
○	11 ½ year	(1553)	◉	11 ½ year	(2553)

SURCHARGE
The surcharge required by 37 CFR 1.20(i)(2) (Fee Code 1558) must be paid as a condition of accepting unintentionally delayed payment of the maintenance fee.

MAINTENANCE FEE (37 CFR 1.20(e)-(g))
The appropriate maintenance fee must be submitted with this petition.

STATEMENT
THE UNDERSIGNED CERTIFIES THAT THE DELAY IN PAYMENT OF THE MAINTENANCE FEE TO THIS PATENT WAS UNINTENTIONAL

PETITIONER(S) REQUEST THAT THE DELAYED PAYMENT OF THE MAINTENANCE FEE BE ACCEPTED AND THE PATENT REINSTATED

THIS PORTION MUST BE COMPLETED BY THE SIGNATORY OR SIGNATORIES

37 CFR 1.378(d) states: "Any petition under this section must be signed by an attorney or agent registered to practice before the Patent and Trademark Office, or by the patentee, the assignee, or other party in interest."

I certify, in accordance with 37 CFR 1.4(d)(4) that I am

◉ An attorney or agent registered to practice before the Patent and Trademark Office

○ A sole patentee

○ A joint patentee; I certify that I am authorized to sign this submission on behalf of all the other patentees.

○ A joint patentee; all of whom are signing this e-petition

○ The assignee of record of the entire interest

Patent Practitioner			
A signature of the applicant or representative is required in accordance with 37 CFR 1.33 and 10.18. Please see 37 CFR 1.4(d) for the form of the signature			
Signature	/Bruce M. Green/	Date (YYYY-MM-DD)	2007-10-05
Name	Bruce M. Green	Registration Number	30524

This collection of information is required by 37 CFR 1.378(c). The information is required to obtain or retain a benefit by the public which is to file (and by the USPTO to process) an application. Confidentiality is governed by 35 U.S.C. 122 and 37 CFR 1.11 and 1.14. This collection is estimated to take 1 hour to complete, including gathering, preparing, and submitting the completed application form to the USPTO. Time will vary depending upon the individual case. Any comments on the amount of time you require to complete this form and/ or suggestions for reducing this burden, should be sent to the Chief Information Officer, U.S. Patent and Trademark Office, U.S. Department of Commerce, P.O. Box 1450, Alexandria, VA 22313-1450. DO NOT SEND FEES OR COMPLETED FORMS TO THIS ADDRESS. **This form can only be used when in conjunction with EFS-Web. If this form is mailed to the USPTO, it may cause delays in reinstating the patent.**

Privacy Act Statement

The Privacy Act of 1974 (P.L. 93-579) requires that you be given certain information in connection with your submission of the attached form related to a patent application or patent. Accordingly, pursuant to the requirements of the Act, please be advised that: (1) the general authority for the collection of this information is 35 U.S.C. 2(b)(2); (2) furnishing of the information solicited is voluntary; and (3) the principal purpose for which the information is used by the U.S. Patent and Trademark Office is to process and/or examine your submission related to a patent application or patent. If you do not furnish the requested information, the U.S. Patent and Trademark Office may not be able to process and/or examine your submission, which may result in termination of proceedings or abandonment of the application or expiration of the patent.

The information provided by you in this form will be subject to the following routine uses:

1. The information on this form will be treated confidentially to the extent allowed under the Freedom of Information Act (5 U.S.C. 552) and the Privacy Act (5 U.S.C. 552a). Records from this system of records may be disclosed to the Department of Justice to determine whether the Freedom of Information Act requires disclosure of these record s.

2. A record from this system of records may be disclosed, as a routine use, in the course of presenting evidence to a court, magistrate, or administrative tribunal, including disclosures to opposing counsel in the course of settlement negotiations.

3. A record in this system of records may be disclosed, as a routine use, to a Member of Congress submitting a request involving an individual, to whom the record pertains, when the individual has requested assistance from the Member with respect to the subject matter of the record.

4. A record in this system of records may be disclosed, as a routine use, to a contractor of the Agency having need for the information in order to perform a contract. Recipients of information shall be required to comply with the requirements of the Privacy Act of 1974, as amended, pursuant to 5 U.S.C. 552a(m).

5. A record related to an International Application filed under the Patent Cooperation Treaty in this system of records may be disclosed, as a routine use, to the International Bureau of the World Intellectual Property Organization, pursuant to the Patent Cooperation Treaty.

6. A record in this system of records may be disclosed, as a routine use, to another federal agency for purposes of National Security review (35 U.S.C. 181) and for review pursuant to the Atomic Energy Act (42 U.S.C. 218(c)).

7. A record from this system of records may be disclosed, as a routine use, to the Administrator, General Services, or his/her designee, during an inspection of records conducted by GSA as part of that agency's responsibility to recommend improvements in records management practices and programs, under authority of 44 U.S.C. 2904 and 2906. Such disclosure shall be made in accordance with the GSA regulations governing inspection of records for this purpose, and any other relevant (i.e., GSA or Commerce) directive. Such disclosure shall not be used to make determinations about individuals.

8. A record from this system of records may be disclosed, as a routine use, to the public after either publication of the application pursuant to 35 U.S.C. 122(b) or issuance of a patent pursuant to 35 U.S.C. 151. Further, a record may be disclosed, subject to the limitations of 37 CFR 1.14, as a routine use, to the public if the record was filed in an application which became abandoned or in which the proceedings were terminated and which application is referenced by either a published application, an application open to public inspections or an issued patent.

9. A record from this system of records may be disclosed, as a routine use, to a Federal, State, or local law enforcement agency, if the USPTO becomes aware of a violation or potential violation of law or regulation.

UNITED STATES PATENT AND TRADEMARK OFFICE

Commissioner for Patents
United States Patent and Trademark Office
P.O. Box 1450
Alexandria, VA 22313-1450
www.uspto.gov

In re Patent No. 5279248
Issue Date: January 18,1994
Application No. 07871631
Filed: April 20,1992
Attorney Docket No. 22-36452

:
:DECISION GRANTING PETITION
:UNDER 37 CFR 1.378(c)
:

This is a decision on the electronic petition, filed October 5,2007 ,under 37 CFR 1.378(c) to accept the unintentionally delayed payment of the 11.5 year maintenance fee for the above-identified patent.

The petition is GRANTED.

The maintenance fee is accepted, and the above-identified patent reinstated as of October 5,2007 . This decision also constitutes notice that the fee has been accepted. An electronic copy of the petition and this decision has been created as an entry in an Image File Wrapper. Nevertheless, petitioner should print and retain an independent copy

Telephone inquires related to this electronic decision should be directed to the Electronic Business Center at 1-866-217-9197.

Under the Paperwork Reduction Act of 1995, no persons are required to respond to a collection of information unless it displays valid OMB control number.

PETITION TO ACCEPT UNINTENTIONALLY DELAYED PAYMENT OF MAINTENANCE FEE IN AN EXPIRED PATENT (37 CFR 1.378(c))

Patent Number	Issue Date (YYYY-MM-DD)	Application Number	Filing Date (YYYY-MM-DD)	Docket Number (if applicable)
5221106	1993-06-22	07872495	1992-04-23	501/1/ADM

CAUTION: Maintenance fee (and surcharge, if any) payment must correctly identify: (1) the patent number and (2) the application number of the actual U.S. application leading to issuance of that patent to ensure the fee(s) is/are associated with the correct patent. 37 CFR 1.366(c) and (d).

SMALL ENTITY
☒ Patentee claims, or has previously claimed, small entity status. See 37 CFR 1.27.

LOSS OF ENTITLEMENT TO SMALL ENTITY STATUS
☐ Patentee is no longer entitled to small entity status. See 37 CFR 1.27(g)

NOT Small Entity			Small Entity		
	Fee	Code		Fee	Code
○	3 ½ year	(1551)	○	3 ½ year	(2551)
○	7 ½ year	(1552)	○	7 ½ year	(2552)
○	11 ½ year	(1553)	◉	11 ½ year	(2553)

SURCHARGE
The surcharge required by 37 CFR 1.20(i)(2) (Fee Code 1558) must be paid as a condition of accepting unintentionally delayed payment of the maintenance fee.

MAINTENANCE FEE (37 CFR 1.20(e)-(g))
The appropriate maintenance fee must be submitted with this petition.

STATEMENT
THE UNDERSIGNED CERTIFIES THAT THE DELAY IN PAYMENT OF THE MAINTENANCE FEE TO THIS PATENT WAS UNINTENTIONAL

PETITIONER(S) REQUEST THAT THE DELAYED PAYMENT OF THE MAINTENANCE FEE BE ACCEPTED AND THE PATENT REINSTATED

THIS PORTION MUST BE COMPLETED BY THE SIGNATORY OR SIGNATORIES

37 CFR 1.378(d) states: "Any petition under this section must be signed by an attorney or agent registered to practice before the Patent and Trademark Office, or by the patentee, the assignee, or other party in interest."

I certify, in accordance with 37 CFR 1.4(d)(4) that I am

◉ An attorney or agent registered to practice before the Patent and Trademark Office

○ A sole patentee

○ A joint patentee; I certify that I am authorized to sign this submission on behalf of all the other patentees.

○ A joint patentee; all of whom are signing this e-petition

○ The assignee of record of the entire interest

Patent Practitioner			
A signature of the applicant or representative is required in accordance with 37 CFR 1.33 and 10.18. Please see 37 CFR 1.4(d) for the form of the signature			
Signature	/Richard M. Goldberg/	Date (YYYY-MM-DD)	2006-11-05
Name	Richard M. Goldberg	Registration Number	28215

This collection of information is required by 37 CFR 1.378(c). The information is required to obtain or retain a benefit by the public which is to file (and by the USPTO to process) an application. Confidentiality is governed by 35 U.S.C. 122 and 37 CFR 1.11 and 1.14. This collection is estimated to take 1 hour to complete, including gathering, preparing, and submitting the completed application form to the USPTO. Time will vary depending upon the individual case. Any comments on the amount of time you require to complete this form and/ or suggestions for reducing this burden, should be sent to the Chief Information Officer, U.S. Patent and Trademark Office, U.S. Department of Commerce, P.O. Box 1450, Alexandria, VA 22313-1450. DO NOT SEND FEES OR COMPLETED FORMS TO THIS ADDRESS. **This form can only be used when in conjunction with EFS-Web. If this form is mailed to the USPTO, it may cause delays in reinstating the patent.**

Privacy Act Statement

The Privacy Act of 1974 (P.L. 93-579) requires that you be given certain information in connection with your submission of the attached form related to a patent application or patent. Accordingly, pursuant to the requirements of the Act, please be advised that: (1) the general authority for the collection of this information is 35 U.S.C. 2(b)(2); (2) furnishing of the information solicited is voluntary; and (3) the principal purpose for which the information is used by the U.S. Patent and Trademark Office is to process and/or examine your submission related to a patent application or patent. If you do not furnish the requested information, the U.S. Patent and Trademark Office may not be able to process and/or examine your submission, which may result in termination of proceedings or abandonment of the application or expiration of the patent.

The information provided by you in this form will be subject to the following routine uses:

1. The information on this form will be treated confidentially to the extent allowed under the Freedom of Information Act (5 U.S.C. 552) and the Privacy Act (5 U.S.C. 552a). Records from this system of records may be disclosed to the Department of Justice to determine whether the Freedom of Information Act requires disclosure of these record s.

2. A record from this system of records may be disclosed, as a routine use, in the course of presenting evidence to a court, magistrate, or administrative tribunal, including disclosures to opposing counsel in the course of settlement negotiations.

3. A record in this system of records may be disclosed, as a routine use, to a Member of Congress submitting a request involving an individual, to whom the record pertains, when the individual has requested assistance from the Member with respect to the subject matter of the record.

4. A record in this system of records may be disclosed, as a routine use, to a contractor of the Agency having need for the information in order to perform a contract. Recipients of information shall be required to comply with the requirements of the Privacy Act of 1974, as amended, pursuant to 5 U.S.C. 552a(m).

5. A record related to an International Application filed under the Patent Cooperation Treaty in this system of records may be disclosed, as a routine use, to the International Bureau of the World Intellectual Property Organization, pursuant to the Patent Cooperation Treaty.

6. A record in this system of records may be disclosed, as a routine use, to another federal agency for purposes of National Security review (35 U.S.C. 181) and for review pursuant to the Atomic Energy Act (42 U.S.C. 218(c)).

7. A record from this system of records may be disclosed, as a routine use, to the Administrator, General Services, or his/her designee, during an inspection of records conducted by GSA as part of that agency's responsibility to recommend improvements in records management practices and programs, under authority of 44 U.S.C. 2904 and 2906. Such disclosure shall be made in accordance with the GSA regulations governing inspection of records for this purpose, and any other relevant (i.e., GSA or Commerce) directive. Such disclosure shall not be used to make determinations about individuals.

8. A record from this system of records may be disclosed, as a routine use, to the public after either publication of the application pursuant to 35 U.S.C. 122(b) or issuance of a patent pursuant to 35 U.S.C. 151. Further, a record may be disclosed, subject to the limitations of 37 CFR 1.14, as a routine use, to the public if the record was filed in an application which became abandoned or in which the proceedings were terminated and which application is referenced by either a published application, an application open to public inspections or an issued patent.

9. A record from this system of records may be disclosed, as a routine use, to a Federal, State, or local law enforcement agency, if the USPTO becomes aware of a violation or potential violation of law or regulation.

UNITED STATES PATENT AND TRADEMARK OFFICE

Commissioner for Patents
United States Patent and Trademark Office
P.O. Box 1450
Alexandria, VA 22313-1450
www.uspto.gov

In re Patent No. 5221106
Issue Date: June 22,1993
Application No. 07872495
Filed: April 23,1992
Attorney Docket No. U-WP-4870-DE

:

:DECISION GRANTING PETITION
:UNDER 37 CFR 1.378(c)

:

This is a decision on the electronic petition, filed November 5,2006 ,under 37 CFR 1.378(c) to accept the unintentionally delayed payment of the 11.5 year maintenance fee for the above-identified patent.

The petition is GRANTED.

The maintenance fee is accepted, and the above-identified patent reinstated as of November 5,2006 . This decision also constitutes notice that the fee has been accepted. An electronic copy of the petition and this decision has been created as an entry in an Image File Wrapper. Nevertheless, petitioner should print and retain an independent copy

Telephone inquires related to this electronic decision should be directed to the Electronic Business Center at 1-866-217-9197.

UNITED STATES PATENT AND TRADEMARK OFFICE

Commissioner for Patents
United States Patent and Trademark Office
P.O. Box 1450
Alexandria, VA 22313-1450
www.uspto.gov

In re Patent No. 5221106
Issue Date: June 22,1993
Application No. 07872495
Filed: April 23,1992
Attorney Docket No. U-WP-4870-DE

:DECISION GRANTING PETITION
:UNDER 37 CFR 1.378(c)

This is a decision on the electronic petition, filed November 5,2006 ,under 37 CFR 1.378(c) to accept the unintentionally delayed payment of the 11.5 year maintenance fee for the above-identified patent.

The petition is GRANTED.

The maintenance fee is accepted, and the above-identified patent reinstated as of November 5,2006 . This decision also constitutes notice that the fee has been accepted. An electronic copy of the petition and this decision has been created as an entry in an Image File Wrapper. Nevertheless, petitioner should print and retain an independent copy

Telephone inquires related to this electronic decision should be directed to the Electronic Business Center at 1-866-217-9197.

UNITED STATES DEPARTMENT OF COMMERCE
Patent and Trademark Office
ASSISTANT SECRETARY AND COMMISSIONER
OF PATENTS AND TRADEMARKS
Washington, D.C. 20231

Paper No. 44

JENNIFER GORDON
PENNIE & EDMONDS
1155 AVENUE OF THE AMERICAS
NEW YORK, NEW YORK 10036

COPY MAILED

APR 14 2000

SPECIAL PROGRAMS OFFICE
DAC FOR PATENTS

In re Application of Gelfland er al. Application No. 07/873,897 Filed: April 24, 1992 For: PURIFIED THERMOSTABLE ENZYME	DECISION DISMISSING PETITION

This is a decision on the petition filed December 7, 1999 under 37 CFR 1.183, requesting waiver of the rules where they prohibit consideration of the Information Disclosure Statement (IDS) filed October 7, 1999, which date is subsequent to the mailing of a final Office action.

The petition is dismissed.

The IDS filed October 7, 1999 has been placed in the file.

Petitioner requests waiver of the rules in view of the six year period that the above-identified application underwent the appeal process, after the final Office action of March 19, 1993. Petitioner notes that the materials cited in the IDS were brought to applicants' attention during that period by way of the prosecution of foreign counterpart applications and also, patent litigation. Petitioner also complains that, due to the changes in the patent statutes in the same interval, now having to refile the application to ensure consideration of the IDS would wreak an unnecessary hardship due to the consequent loss of term in any forthcoming patent arising from a claim for benefit under 35 USC 120 in any continuing application, which would necessarily be filed after June 8, 1995.

Since the above-noted IDS has been submitted subsequent to the mailing of a final Office action on March 19, 1993, 1997, satisfaction of the requirements of 37 CFR 1.97(d)(1)-(3) was necessary for the IDS to now be considered. That is: (1) a certification in compliance with 37 CFR 1.97(e), (2) a petition requesting consideration, and (3) the $130 fee set forth in 37 CFR 1.17(i), is necessary.

The regulations pertaining to the submission of an information disclosure statement (IDS) do not require that an IDS be filed, but rather, set forth the circumstances and conditions under which the Office will consider information promptly brought to its attention by applicant(s). Further, these circumstances and conditions are linked to the stage of prosecution at the time of submission of the IDS, as it is necessary for the Patent and Trademark Office (Office) to balance its need and desire to consider all information relevant to an application with its need for an efficient operation and its capability to consider information at various stages in the prosecution of an application.

In order for grant of any petition under 37 CFR 1.183, petitioner must show (1) that this is an extraordinary situation where (2) justice requires waiver of the rule. In re Sivertz, 227 U.S.P.Q. 255, 256 (Comm'r Pat. 1985). Petitioner has not shown that either condition exists in this case. Petitioner has not set forth an explanation for the belated submission of the IDS, much less attempted to demonstrate that the delay in submission was caused by "extraordinary circumstances" such that "justice requires" waiver of the requirement for certification set forth in 37 CFR 1.97(d)(1).

In this regard, the petition is silent as to when each piece of information in the IDS became known to petitioner, such that the the three month period for submitting that specific piece of information was triggered. It is immaterial that the application was under final rejection and appellate review for an extended period of time, as such did not preclude petitioner from timely submission of each piece of information as it became available. See MPEP 609. Moreover, the PTO will undertake to consider information *throughout the pendency of an application* until the point where the issue fee has been paid, as long as the appropriate requirements of 37 CFR 1.97 are met at that stage of prosecution when the IDS is submitted. Id. at (B)(3).

Petitioner proffers no explanation for petitioner's protracted delay in bringing the items of information in the IDS to the attention of the PTO, such that the three month time period of 37 CFR 1.97(e) should be waived. That is, petitioner has not demonstrated that the protracted delay in submission of each of the items in the IDS was caused by circumstances beyond his control. Equitable powers should not be invoked to excuse the performance of a condition by a party that has not acted with reasonable, due care and diligence. U.S. v. Lockheed Petroleum Services, 709 F.2d 1472, 1475 (Fed. Cir. 1983). The Office, where it has the power to do so, should not relax the requirements of established practice in order to save an applicant from the consequence of his delay. See, Ex Parte Sassin, 1906 Dec. Comm'r. Pat. 205, 206 (Comm'r Pat. 1906)

and compare Ziegler v. Baxter v. Natta, 159 USPQ 378, 379 (Comm'r Pat. 1968) and Williams v. The Five Platters, Inc., 510 F.2d 963, 184 USPQ 744 (CCPA 1975).

There is no adequate showing of "an extraordinary situation" in which "justice requires" suspension of 37 CFR 1.97(e). See, Nitto Chem. Indus. Co. v. Comer, 39 USPQ2d 1778, 1782 (D.D.C. 1994)(circumstances are not extraordinary, and do not require waiver of the rules, when a party makes an avoidable mistake in filing papers). Circumstances resulting from petitioner's, or petitioner's counsel's, failure to exercise due care, or lack of knowledge of, or failure to properly apply, the patent statutes or rules of practice are not, in any event, extraordinary circumstances where the interests of justice require the granting of relief. See, In re Tetrafluor, Inc., 17 USPQ2d 1160, 1162 (Comm'r Pats. 1990); In re Bird & Son, Inc. 195 USPQ 586, 588 (Comm'r Pats. 1977).

Moreover, petitioner concededly has a suitable remedy on hand for his predicament, that does not require the extraordinary remedy of invoking 37 CFR 1.183. It is brought to petitioner's attention that the PTO will not normally consider an extraordinary remedy, when the rules already provide an avenue for obtaining the relief sought. See Cantello v. Rasmussen, 220 USPQ 664, 664 (Comm'r Pat. 1982). As set forth in MPEP § 609(B)(3), (B)(4), applicants wishing to have the PTO consider an IDS, where, as apparently herein, the necessary certification cannot be made, should consider the filing of a continuing application, wherein the applicants may bring the references to the attention of the examiner without having to also tender a certification. While petitioner complains, due to the intervening change in the patent statute, about the loss of term should a continuing application be necessary to get the IDS considered, the underlying delay in submission of the IDS which may now necessitate such an action is that of petitioner, not the PTO. Rather, it is incumbent upon an applicant to prosecute his invention with continuing diligence and an acute awareness of the statute. See BEC Pressure Controls Corporation v. Dwyer Instruments, Inc., 380 F.Supp. 1397, 1399, 182 USPQ 190, 192 (D.C. N.Ind. 1974).

Moreover, the statutes and regulations do not compel an applicant to claim benefit under 35 USC 120 of any earlier case that might shorten the term of a forthcoming patent under 35 USC 154. However, should petitioner desire to be entitled to the potential benefits of earlier application(s) via 35 USC 120, then petitioner must also accept the consequences attendant to that action. See Abbott Laboratories v. Novopharm Ltd., 38 USPQ2d 1309, 1312 (D.C. N. Il. 1996), *aff'd* 104 F.3d. 1305, 41 USPQ2d 1535 (Fed. Cir. 1997).

This file is being forwarded to the Office of Publications for processing into a patent.

Telephone inquiries relevant to this decision may be addressed to the undersigned at (703) 305-1820.

Brian Hearn

Brian Hearn
Petitons Examiner
Office of Petitions
Office of the Deputy Assistant Commissioner
for Patent Policy and Projects

UNITED STATES PATENT AND TRADEMARK OFFICE

Commissioner for Patents
United States Patent and Trademark Office

P.O. Box 1450
Alexandria, VA 22313-1450
www.uspto.gov

WEAVER, AUSTIN, VILLENEUVE & SAMPSON, LLP
P.O. Box 70250
Oakland, CA. 94612-0250

MAILED

MAR 30 2009

OFFICE OF PETITIONS

In re Patent No. 5,305,120	:	
Issue Date: April 19, 1994	:	
Application No. 07/874,190	:	DECISION ON PETITION
Filed: April 24, 1992	:	
Inventor: Yves C. Faroudja	:	

This is a corrected decision on the renewed petition filed October 7, 2008, requesting reconsideration pursuant to 37 CFR § 1.183. The petition is being properly treated as a petition under 37 CFR §1.182 to invalidate an assignment previously recorded against the above-identified patent. The decision mailed October 24, 2008, granting this renewed petition, has been reevaluated and is **VACATED.**

The petition under 37 CFR § 1.182 is **dismissed**.

Any reply must be submitted within TWO MONTHS from the mail date of this decision. Extensions of time under 37 CFR § 1.136(a) are permitted. This is not a final agency action within the meaning of 5 U.S.C. § 704.

Petitioner has requested that the assignment record be amended to reflect that petitioner is the true owner of the above-noted patent. In particular petitioner requests expungement of purportedly erroneous assignment documents at Reel 020817, Frame 0243, so that petitioner Yves C. Faroudja, may be identified as the true and correct owner of the '120 patent. Petitioner submits that the assignment submitted on April 9, 2008 was submitted with an improper document attached and therefore request expungement of the assignment.

As discussed in section 323.01(d) of the Manual of Patent Examining Procedure (MPEP), petitions to correct, modify or "expunge" assignment records are granted only if the petitioner can prove that:

(A) the normal corrective procedures outlined in MPEP § 323.01(a) through § 323.01(c) will not provide the petitioner with adequate relief; and
(B) the integrity of the assignment records will not be affected by granting the petition.

Petitioner has not proven either item A or B.

In regard to item A, there is no evidence of record that petitioner has attempted or considered any of the corrective procedures outlined in MPEP § 323.01(a) through § 323.01(c). Also, there is no explanation of record as to why none of these procedures would provide adequate relief.

Petitioner seeks an extraordinary remedy, properly addressed under 37 CFR § 1.182. The USPTO will not normally resort to an extraordinary remedy under 37 CFR § 1.182 if the rules of practice and the procedures before the USPTO already provide an avenue for the requested relief. See Cantello v. Rasmussen, 220 USPQ 664, (Comm'r Pats. 1982).

As background, the USPTO simply acts in a ministerial capacity in recording documents that have been submitted for recordation. See 35 USC 261 and 37 CFR § 3.11. However, the recording of a document pursuant to 37 CFR § 3.11 is **not** a determination by the USPTO of the validity of the document *per se* or the effect that document has on the title to a patent or application. See 37 CFR § 3.54. Moreover, it is USPTO policy to maintain a complete history of claimed interests in a given property, and, as such, a recorded assignment document will be retained, even if it is subsequently found to be invalid. In re Raney, 24 USPQ2d 1713 (Comm'r Pat. 1992).

As set forth in MPEP 323, an error in a recorded assignment is not corrected by invalidating the previous document, but by simply submitting a "corrective document". The "corrective document" must include 1) a copy of the original assignment document with the corrections made therein. The corrections must be initialed and dated by the party conveying the interest; and 2) a new Recordation Form Cover Sheet (form PTO-1595). The new recordation form cover sheet must identify the submission as a "corrective document" submission and indicate the reel and frame number where the incorrectly recorded assignment document appears. The person signing the new recordation form cover sheet must state that the information provided on the new cover sheet is true and correct and that any copy submitted is a true copy of the original document. The original cover sheet should be submitted with the corrective document. The corrective document will be recorded and given a new reel and frame number and recording date. The recording fee set forth in 37 CFR 1.21(h) is required for each patent application and patent against which the corrective document is being recorded. See MPEP § 302.06. Corrections may be made on the original assignment document, for example, by lining out an incorrect patent or application number in a merger or change of name (see MPEP § 314).

Therefore, the rules of practice and the procedures before the USPTO provide an avenue for the requested relief without relying upon extraordinary measures. As a request for the Office to invalidate an assignment is both extraordinary and contrary to USPTO policy, this petition must be dismissed.

In regard to item B, the statements submitted in support of the petition to expunge fails to establish that expungement will not affect the assignment records in this instance. The assignment recorded in the USPTO assignment records indicates that Faroudja Laboratories, Inc. has some rights with regard to the above mentioned patent, which suggests that the recordation may have been proper. Petitioner should note that recordation is available for numerous documents related to a patent, not just the assignment of the entire right, title and interest in the

patent. See at least MPEP § 313. Moreover, the USPTO does not determine the extent of rights transferred by the assignment papers or any recorded document. Such a determination is made by a court of relevant jurisdiction. No evidence is of record establishing that the assignment was recorded improperly. Absent sufficient evidence to support the requested expungement, the integrity of the assignment records will not be disturbed by the USPTO.

There is no indication that the person signing the petition was ever given a power of attorney or authorization of agent to prosecute the application. If the person signing the petition desires to receive future correspondence regarding this application, the appropriate power of attorney or authorization of agent must be submitted. A courtesy copy of this decision is being mailed to the person signing the petition; however, all future correspondence will be directed to the address currently of record until appropriate instructions are received.

Telephone inquiries concerning this communication should be directed to the undersigned at (571)272-0602.

/ Thurman K. Page /
Thurman K. Page
Petitions Examiner
Office of Petitions

cc: Michael J. Ferrazaro
P.O. Box 1687
Cupertino, CA 95015-1687

Under the Paperwork Reduction Act of 1995, no persons are required to respond to a collection of information unless it displays valid OMB control number.

PETITION TO ACCEPT UNINTENTIONALLY DELAYED PAYMENT OF MAINTENANCE FEE IN AN EXPIRED PATENT (37 CFR 1.378(c))

Patent Number	Issue Date (YYYY-MM-DD)	Application Number	Filing Date (YYYY-MM-DD)	Docket Number (if applicable)
5277329	1994-01-11	07/874,902	1992-04-28	18192.115US1

CAUTION: Maintenance fee (and surcharge, if any) payment must correctly identify: (1) the patent number and (2) the application number of the actual U.S. application leading to issuance of that patent to ensure the fee(s) is/are associated with the correct patent. 37 CFR 1.366(c) and (d).

SMALL ENTITY
☐ Patentee claims, or has previously claimed, small entity status. See 37 CFR 1.27.

LOSS OF ENTITLEMENT TO SMALL ENTITY STATUS
☐ Patentee is no longer entitled to small entity status. See 37 CFR 1.27(g)

NOT Small Entity		Small Entity	
Fee	Code	Fee	Code
○ 3 ½ year	(1551)	○ 3 ½ year	(2551)
○ 7 ½ year	(1552)	○ 7 ½ year	(2552)
◉ 11 ½ year	(1553)	○ 11 ½ year	(2553)

SURCHARGE
The surcharge required by 37 CFR 1.20(i)(2) (Fee Code 1558) must be paid as a condition of accepting unintentionally delayed payment of the maintenance fee.

MAINTENANCE FEE (37 CFR 1.20(e)-(g))
The appropriate maintenance fee must be submitted with this petition.

STATEMENT
THE UNDERSIGNED CERTIFIES THAT THE DELAY IN PAYMENT OF THE MAINTENANCE FEE TO THIS PATENT WAS UNINTENTIONAL

PETITIONER(S) REQUEST THAT THE DELAYED PAYMENT OF THE MAINTENANCE FEE BE ACCEPTED AND THE PATENT REINSTATED

THIS PORTION MUST BE COMPLETED BY THE SIGNATORY OR SIGNATORIES

37 CFR 1.378(d) states: "Any petition under this section must be signed by an attorney or agent registered to practice before the Patent and Trademark Office, or by the patentee, the assignee, or other party in interest."

I certify, in accordance with 37 CFR 1.4(d)(4) that I am

○ An attorney or agent registered to practice before the Patent and Trademark Office

○ A sole patentee

○ A joint patentee; I certify that I am authorized to sign this submission on behalf of all the other patentees.

○ A joint patentee; all of whom are signing this e-petition

◉ The assignee of record of the entire interest

The Assignee of record of the entire interest			
Under 37 CFR 3.71 an assignee becomes of record by filing a statement in compliance with 37 CFR 3.73(b). Signature requirements are set forth in 37 CFR 1.4(d), and the undersigned certifies that he / she is empowered to act on behalf of the assignee of the entire interest			
Signature	/Donald J. Holtz /	Date (YYYY-MM-DD)	2007-05-12
Name	Donald J. Hotz, Chief Financial Officer		
Enter Reel and Frame Number		Remove	
Reel Number	006111	Frame Number	0554
Enter Reel and Frame Number		Remove	
Reel Number	009464	Frame Number	0773
Enter Reel and Frame Number		Remove	
Reel Number	020186	Frame Number	0417
Click ADD for additional Reel Number and Frame Number		Add	

This collection of information is required by 37 CFR 1.378(c). The information is required to obtain or retain a benefit by the public which is to file (and by the USPTO to process) an application. Confidentiality is governed by 35 U.S.C. 122 and 37 CFR 1.11 and 1.14. This collection is estimated to take 1 hour to complete, including gathering, preparing, and submitting the completed application form to the USPTO. Time will vary depending upon the individual case. Any comments on the amount of time you require to complete this form and/ or suggestions for reducing this burden, should be sent to the Chief Information Officer, U.S. Patent and Trademark Office, U.S. Department of Commerce, P.O. Box 1450, Alexandria, VA 22313-1450. DO NOT SEND FEES OR COMPLETED FORMS TO THIS ADDRESS. **This form can only be used when in conjunction with EFS-Web. If this form is mailed to the USPTO, it may cause delays in reinstating the patent.**

Privacy Act Statement

The Privacy Act of 1974 (P.L. 93-579) requires that you be given certain information in connection with your submission of the attached form related to a patent application or patent. Accordingly, pursuant to the requirements of the Act, please be advised that: (1) the general authority for the collection of this information is 35 U.S.C. 2(b)(2); (2) furnishing of the information solicited is voluntary; and (3) the principal purpose for which the information is used by the U.S. Patent and Trademark Office is to process and/or examine your submission related to a patent application or patent. If you do not furnish the requested information, the U.S. Patent and Trademark Office may not be able to process and/or examine your submission, which may result in termination of proceedings or abandonment of the application or expiration of the patent.

The information provided by you in this form will be subject to the following routine uses:

1. The information on this form will be treated confidentially to the extent allowed under the Freedom of Information Act (5 U.S.C. 552) and the Privacy Act (5 U.S.C. 552a). Records from this system of records may be disclosed to the Department of Justice to determine whether the Freedom of Information Act requires disclosure of these record s.

2. A record from this system of records may be disclosed, as a routine use, in the course of presenting evidence to a court, magistrate, or administrative tribunal, including disclosures to opposing counsel in the course of settlement negotiations.

3. A record in this system of records may be disclosed, as a routine use, to a Member of Congress submitting a request involving an individual, to whom the record pertains, when the individual has requested assistance from the Member with respect to the subject matter of the record.

4. A record in this system of records may be disclosed, as a routine use, to a contractor of the Agency having need for the information in order to perform a contract. Recipients of information shall be required to comply with the requirements of the Privacy Act of 1974, as amended, pursuant to 5 U.S.C. 552a(m).

5. A record related to an International Application filed under the Patent Cooperation Treaty in this system of records may be disclosed, as a routine use, to the International Bureau of the World Intellectual Property Organization, pursuant to the Patent Cooperation Treaty.

6. A record in this system of records may be disclosed, as a routine use, to another federal agency for purposes of National Security review (35 U.S.C. 181) and for review pursuant to the Atomic Energy Act (42 U.S.C. 218(c)).

7. A record from this system of records may be disclosed, as a routine use, to the Administrator, General Services, or his/her designee, during an inspection of records conducted by GSA as part of that agency's responsibility to recommend improvements in records management practices and programs, under authority of 44 U.S.C. 2904 and 2906. Such disclosure shall be made in accordance with the GSA regulations governing inspection of records for this purpose, and any other relevant (i.e., GSA or Commerce) directive. Such disclosure shall not be used to make determinations about individuals.

8. A record from this system of records may be disclosed, as a routine use, to the public after either publication of the application pursuant to 35 U.S.C. 122(b) or issuance of a patent pursuant to 35 U.S.C. 151. Further, a record may be disclosed, subject to the limitations of 37 CFR 1.14, as a routine use, to the public if the record was filed in an application which became abandoned or in which the proceedings were terminated and which application is referenced by either a published application, an application open to public inspections or an issued patent.

9. A record from this system of records may be disclosed, as a routine use, to a Federal, State, or local law enforcement agency, if the USPTO becomes aware of a violation or potential violation of law or regulation.

UNITED STATES PATENT AND TRADEMARK OFFICE

Commissioner for Patents
United States Patent and Trademark Office
P.O. Box 1450
Alexandria, VA 22313-1450
www.uspto.gov

In re Patent No. 5277329
Issue Date: January 11,1994
Application No. 07874902
Filed: April 28,1992
Attorney Docket No. A-55877/ESW

:
:DECISION GRANTING PETITION
:UNDER 37 CFR 1.378(c)
:

This is a decision on the electronic petition, filed December 6,2007 ,under 37 CFR 1.378(c) to accept the unintentionally delayed payment of the 11.5 year maintenance fee for the above-identified patent.

The petition is GRANTED.

The maintenance fee is accepted, and the above-identified patent reinstated as of December 6,2007 . This decision also constitutes notice that the fee has been accepted. An electronic copy of the petition and this decision has been created as an entry in an Image File Wrapper. Nevertheless, petitioner should print and retain an independent copy

Telephone inquires related to this electronic decision should be directed to the Electronic Business Center at 1-866-217-9197.

Under the Paperwork Reduction Act of 1995, no persons are required to respond to a collection of information unless it displays valid OMB control number.

PETITION TO ACCEPT UNINTENTIONALLY DELAYED PAYMENT OF MAINTENANCE FEE IN AN EXPIRED PATENT (37 CFR 1.378(c))

Patent Number	Issue Date (YYYY-MM-DD)	Application Number	Filing Date (YYYY-MM-DD)	Docket Number (if applicable)
5178690	1993-01-12	07878374	1992-05-04	CEDE 2179

CAUTION: Maintenance fee (and surcharge, if any) payment must correctly identify: (1) the patent number and (2) the application number of the actual U.S. application leading to issuance of that patent to ensure the fee(s) is/are associated with the correct patent. 37 CFR 1.366(c) and (d).

SMALL ENTITY
☐ Patentee claims, or has previously claimed, small entity status. See 37 CFR 1.27.

LOSS OF ENTITLEMENT TO SMALL ENTITY STATUS
☒ Patentee is no longer entitled to small entity status. See 37 CFR 1.27(g)

NOT Small Entity		Small Entity	
Fee	Code	Fee	Code
○ 3 ½ year	(1551)	○ 3 ½ year	(2551)
○ 7 ½ year	(1552)	○ 7 ½ year	(2552)
◉ 11 ½ year	(1553)	○ 11 ½ year	(2553)

SURCHARGE
The surcharge required by 37 CFR 1.20(i)(2) (Fee Code 1558) must be paid as a condition of accepting unintentionally delayed payment of the maintenance fee.

MAINTENANCE FEE (37 CFR 1.20(e)-(g))
The appropriate maintenance fee must be submitted with this petition.

STATEMENT
THE UNDERSIGNED CERTIFIES THAT THE DELAY IN PAYMENT OF THE MAINTENANCE FEE TO THIS PATENT WAS UNINTENTIONAL

PETITIONER(S) REQUEST THAT THE DELAYED PAYMENT OF THE MAINTENANCE FEE BE ACCEPTED AND THE PATENT REINSTATED

THIS PORTION MUST BE COMPLETED BY THE SIGNATORY OR SIGNATORIES

37 CFR 1.378(d) states: "Any petition under this section must be signed by an attorney or agent registered to practice before the Patent and Trademark Office, or by the patentee, the assignee, or other party in interest."

I certify, in accordance with 37 CFR 1.4(d)(4) that I am

◉ An attorney or agent registered to practice before the Patent and Trademark Office

○ A sole patentee

○ A joint patentee; I certify that I am authorized to sign this submission on behalf of all the other patentees.

○ A joint patentee; all of whom are signing this e-petition

○ The assignee of record of the entire interest

Patent Practitioner			
A signature of the applicant or representative is required in accordance with 37 CFR 1.33 and 10.18. Please see 37 CFR 1.4(d) for the form of the signature			
Signature	/Paul I. J. Fleischut/	Date (YYYY-MM-DD)	2006-11-29
Name	Paul I. J. Fleischut	Registration Number	35513

This collection of information is required by 37 CFR 1.378(c). The information is required to obtain or retain a benefit by the public which is to file (and by the USPTO to process) an application. Confidentiality is governed by 35 U.S.C. 122 and 37 CFR 1.11 and 1.14. This collection is estimated to take 1 hour to complete, including gathering, preparing, and submitting the completed application form to the USPTO. Time will vary depending upon the individual case. Any comments on the amount of time you require to complete this form and/ or suggestions for reducing this burden, should be sent to the Chief Information Officer, U.S. Patent and Trademark Office, U.S. Department of Commerce, P.O. Box 1450, Alexandria, VA 22313-1450. DO NOT SEND FEES OR COMPLETED FORMS TO THIS ADDRESS. **This form can only be used when in conjunction with EFS-Web. If this form is mailed to the USPTO, it may cause delays in reinstating the patent.**

Privacy Act Statement

The Privacy Act of 1974 (P.L. 93-579) requires that you be given certain information in connection with your submission of the attached form related to a patent application or patent. Accordingly, pursuant to the requirements of the Act, please be advised that: (1) the general authority for the collection of this information is 35 U.S.C. 2(b)(2); (2) furnishing of the information solicited is voluntary; and (3) the principal purpose for which the information is used by the U.S. Patent and Trademark Office is to process and/or examine your submission related to a patent application or patent. If you do not furnish the requested information, the U.S. Patent and Trademark Office may not be able to process and/or examine your submission, which may result in termination of proceedings or abandonment of the application or expiration of the patent.

The information provided by you in this form will be subject to the following routine uses:

1. The information on this form will be treated confidentially to the extent allowed under the Freedom of Information Act (5 U.S.C. 552) and the Privacy Act (5 U.S.C. 552a). Records from this system of records may be disclosed to the Department of Justice to determine whether the Freedom of Information Act requires disclosure of these record s.

2. A record from this system of records may be disclosed, as a routine use, in the course of presenting evidence to a court, magistrate, or administrative tribunal, including disclosures to opposing counsel in the course of settlement negotiations.

3. A record in this system of records may be disclosed, as a routine use, to a Member of Congress submitting a request involving an individual, to whom the record pertains, when the individual has requested assistance from the Member with respect to the subject matter of the record.

4. A record in this system of records may be disclosed, as a routine use, to a contractor of the Agency having need for the information in order to perform a contract. Recipients of information shall be required to comply with the requirements of the Privacy Act of 1974, as amended, pursuant to 5 U.S.C. 552a(m).

5. A record related to an International Application filed under the Patent Cooperation Treaty in this system of records may be disclosed, as a routine use, to the International Bureau of the World Intellectual Property Organization, pursuant to the Patent Cooperation Treaty.

6. A record in this system of records may be disclosed, as a routine use, to another federal agency for purposes of National Security review (35 U.S.C. 181) and for review pursuant to the Atomic Energy Act (42 U.S.C. 218(c)).

7. A record from this system of records may be disclosed, as a routine use, to the Administrator, General Services, or his/her designee, during an inspection of records conducted by GSA as part of that agency's responsibility to recommend improvements in records management practices and programs, under authority of 44 U.S.C. 2904 and 2906. Such disclosure shall be made in accordance with the GSA regulations governing inspection of records for this purpose, and any other relevant (i.e., GSA or Commerce) directive. Such disclosure shall not be used to make determinations about individuals.

8. A record from this system of records may be disclosed, as a routine use, to the public after either publication of the application pursuant to 35 U.S.C. 122(b) or issuance of a patent pursuant to 35 U.S.C. 151. Further, a record may be disclosed, subject to the limitations of 37 CFR 1.14, as a routine use, to the public if the record was filed in an application which became abandoned or in which the proceedings were terminated and which application is referenced by either a published application, an application open to public inspections or an issued patent.

9. A record from this system of records may be disclosed, as a routine use, to a Federal, State, or local law enforcement agency, if the USPTO becomes aware of a violation or potential violation of law or regulation.

UNITED STATES PATENT AND TRADEMARK OFFICE

Commissioner for Patents
United States Patent and Trademark Office
P.O. Box 1450
Alexandria, VA 22313-1450
www.uspto.gov

In re Patent No. 5178690
Issue Date: January 12,1993
Application No. 07878374
Filed: May 4,1992
Attorney Docket No. I-11285

:
:DECISION GRANTING PETITION
:UNDER 37 CFR 1.378(c)
:

This is a decision on the electronic petition, filed November 29,2006 ,under 37 CFR 1.378(c) to accept the unintentionally delayed payment of the 11.5 year maintenance fee for the above-identified patent.

The petition is GRANTED.

The maintenance fee is accepted, and the above-identified patent reinstated as of November 29,2006. This decision also constitutes notice that the fee has been accepted. An electronic copy of the petition and this decision has been created as an entry in an Image File Wrapper. Nevertheless, petitioner should print and retain an independent copy

Telephone inquires related to this electronic decision should be directed to the Electronic Business Center at 1-866-217-9197.

UNITED STATES PATENT AND TRADEMARK OFFICE

Commissioner for Patents
United States Patent and Trademark Office
P.O. Box 1450
Alexandria, VA 22313-1450
www.uspto.gov

WEAVER, AUSTIN, VILLENEUVE & SAMPSON, LLP
P.O. Box 70250
Oakland, CA 94612-0250

COPY MAILED

MAR 3 0 2009

OFFICE OF PETITIONS

In re Patent No. 5,291,280	:	
Issue Date: March 1, 1994	:	
Application No. 07/878,725	:	DECISION ON PETITION
Filed: May 5, 1992	:	
Inventor: Yves C. Faroudja et al	:	

This is a decision on the petitions, filed August 15, 2008, and October 7, 2008, pursuant to 37 CFR §§ 1.59(b), and 1.183. The petition is being treated as a petition under 37 CFR §1.182 to invalidate an assignment previously recorded against the above-identified patent.

The petition under 37 CFR § 1.183 is **dismissed as premature**.

The petition under 37 CFR § 1.182 is **dismissed**.

Any reply must be submitted within TWO MONTHS from the mail date of this decision. Extensions of time under 37 CFR § 1.136(a) are permitted. This is not a final agency action within the meaning of 5 U.S.C. § 704.

Petitioner has requested that the assignment record be amended to reflect that petitioner is the true owner of the above-noted patent. In particular petitioner requests expungement of purportedly erroneous assignment documents at Reel 020817, Frame 0243, so that petitioner Yves C. Faroudja, may be identified as the true and correct owner of the '385 patent. Petitioner submits that the assignment submitted on April 9, 2008 was submitted with an improper document attached and therefore request expungement of the assignment.

A review of the complete file history in this case indicates that there is no petition decision mailed September 19, 2008, as alleged in petitioner's Request for Reconsideration under 37 CFR § 1.183. Hence the petition under 37 CFR § 1.183 petition is dismissed as being premature.

As discussed in section 323.01(d) of the Manual of Patent Examining Procedure (MPEP), petitions to correct, modify or "expunge" assignment records are granted only if the petitioner can prove that:

(A) the normal corrective procedures outlined in MPEP § 323.01(a) through § 323.01(c) will not provide the petitioner with adequate relief; and

(B) the integrity of the assignment records will not be affected by granting the petition.

Petitioner has not proven either item A or B.

In regard to item A, there is no evidence of record that petitioner has attempted or considered any of the corrective procedures outlined in MPEP § 323.01(a) through § 323.01(c). Also, there is no explanation of record as to why none of these procedures would provide adequate relief.

Petitioner seeks an extraordinary remedy, properly addressed under 37 CFR § 1.182. The USPTO will not normally resort to an extraordinary remedy under 37 CFR § 1.182 if the rules of practice and the procedures before the USPTO already provide an avenue for the requested relief. See Cantello v. Rasmussen, 220 USPQ 664, (Comm'r Pats. 1982).

As background, the USPTO simply acts in a ministerial capacity in recording documents that have been submitted for recordation. See 35 USC 261 and 37 CFR § 3.11. However, the recording of a document pursuant to 37 CFR § 3.11 is **not** a determination by the USPTO of the validity of the document *per se* or the effect that document has on the title to a patent or application. See 37 CFR § 3.54. Moreover, it is USPTO policy to maintain a complete history of claimed interests in a given property, and, as such, a recorded assignment document will be retained, even if it is subsequently found to be invalid. In re Raney, 24 USPQ2d 1713 (Comm'r Pat. 1992).

As set forth in MPEP 323, an error in a recorded assignment is not corrected by invalidating the previous document, but by simply submitting a "corrective document". The "corrective document" must include 1) a copy of the original assignment document with the corrections made therein. The corrections must be initialed and dated by the party conveying the interest; and 2) a new Recordation Form Cover Sheet (form PTO-1595). The new recordation form cover sheet must identify the submission as a "corrective document" submission and indicate the reel and frame number where the incorrectly recorded assignment document appears. The person signing the new recordation form cover sheet must state that the information provided on the new cover sheet is true and correct and that any copy submitted is a true copy of the original document. The original cover sheet should be submitted with the corrective document. The corrective document will be recorded and given a new reel and frame number and recording date. The recording fee set forth in 37 CFR 1.21(h) is required for each patent application and patent against which the corrective document is being recorded. See MPEP § 302.06. Corrections may be made on the original assignment document, for example, by lining out an incorrect patent or application number in a merger or change of name (see MPEP § 314).

Therefore, the rules of practice and the procedures before the USPTO provide an avenue for the requested relief without relying upon extraordinary measures. As a request for the Office to invalidate an assignment is both extraordinary and contrary to USPTO policy, this petition must be dismissed.

In regard to item B, the statements submitted in support of the petition to expunge fails to establish that expungement will not affect the assignment records in this instance. The

assignment recorded in the USPTO assignment records indicates that Faroudja Laboratories, Inc. has some rights with regard to the above mentioned patent, which suggests that the recordation may have been proper. Petitioner should note that recordation is available for numerous documents related to a patent, not just the assignment of the entire right, title and interest in the patent. See at least MPEP § 313. Moreover, the USPTO does not determine the extent of rights transferred by the assignment papers or any recorded document. Such a determination is made by a court of relevant jurisdiction. No evidence is of record establishing that the assignment was recorded improperly. Absent sufficient evidence to support the requested expungement, the integrity of the assignment records will not be disturbed by the USPTO.

In addition, the petition fee paid is not sufficient. A petition under 37 CFR § 1.182 requires the payment of $400.00. However, only $200.00 has been paid due to the erroneous assumption that the petition was properly filed under 37 CFR § 1.59. A petition under 37 CFR § 1.59 applies to application files, not assignment records. The $200.00 payment has been credited to petitioner's Deposit Account 50-4481. A petition to expunge assignment documents is properly addressed under 37 CFR § 1.182 and a fee of $400.00 is required. As authorized, the required fee of $400.00 has been charged to petitioner's Deposit Account 50-4481.

There is no indication that the person signing the petition was ever given a power of attorney or authorization of agent to prosecute the application. If the person signing the petition desires to receive future correspondence regarding this application, the appropriate power of attorney or authorization of agent must be submitted. A courtesy copy of this decision is being mailed to the person signing the petition; however, all future correspondence will be directed to the address currently of record until appropriate instructions are received.

Telephone inquiries concerning this communication should be directed to the undersigned at (571)272-0602.

Thurman K. Page
Petitions Examiner
Office of Petitions

cc: Michael J. Ferrazaro
P.O. Box 1687
Cupertino, CA 95015-1687

UNITED STATES PATENT AND TRADEMARK OFFICE

Commissioner for Patents
United States Patent and Trademark Office
P.O. Box 1450
Alexandria, VA 22313-1450
www.uspto.gov

JACK C. MUNRO
28720 ROADSIDE DRIVE, SUITE 225
AGOURA HILLS, CA 91301

COPY MAILED

FEB 13 2009

OFFICE OF PETITIONS

In re Patent No. 5,178,449	:	
Issue Date: January 12, 1993	:	
Application No. 07/883,675	:	ON PETITION
Filed: May 15, 1992	:	
Attorney Docket No. None	:	

This is a decision in response to a petition filed July 25, 2006, under 37 CFR 1.378(c), to accept the unintentionally delayed payment of a maintenance fee for the above-identified patent. The delay in responding is regretted; however, the petition was recently referred to the Office of Petitions for consideration.

The petition is **GRANTED**.

This patent expired on January 12, 2005 for failure to pay the 11 ½ year maintenance fee. Since this petition was submitted within twenty-four months after the six-month grace period provided in 37 CFR 1.362(e), the petition was timely filed under the provisions of 37 CFR 1.378(c).

It is noted that while the patent number is 5,178,449, the petition incorrectly identifies the patent application as 1,578,449. Since one mandatory identifier pursuant to § 1.366 (U.S. Patent Application No. 07/883,675) was included on the petition, the maintenance fee and surcharge will be accepted for Patent No. 5,178,449.

The maintenance fee is hereby accepted and the above-identified patent is reinstated as of the mail date of this decision.

The file does not indicate a change of address has been submitted, although the address given on the petition differs from the address of record. If appropriate, a change of address should be filed in accordance with MPEP 601.03. A courtesy copy of this decision is being mailed to the address given on the petition; however, the Office will mail all future correspondence solely to the address of record.

The patent file is being forwarded to Files Repository.

Telephone inquiries concerning this decision should be directed to Alicia Kelley at (571) 272-6059.

/SDB/

Sherry D. Brinkley
Petitions Examiner
Office of Petitions

cc: RONALD S. BAUER
1945 S. TUBEWAY AVENUE
CITY OF COMMERCE, CA 90040

UNITED STATES PATENT AND TRADEMARK OFFICE

COMMISSIONER FOR PATENTS
UNITED STATES PATENT AND TRADEMARK OFFICE
WASHINGTON, D.C. 20231
www.uspto.gov

Paper No. 99

MAURICE B. STIEFEL
BRYAN CAVE
245 PARK AVENUE
NEW YORK NY 10167-0034

COPY MAILED

JUN 2 0 2002

OFFICE OF PETITIONS

In re Patent No. 6,365,687	:	
Issue Date: April 2, 2002	:	
Application No. 07/883,912	:	ON PETITION
Filed: May 12, 1992	:	
Attorney Docket No. 15488/57113	:	

This is a decision on the petition filed April 8, 2002, to waive the rules and accept the correction of the assignee on the front page of the above-identified patent.

The petition is granted.

Telephone inquiries concerning this matter may be directed to the undersigned at (703) 305-8680. Any questions concerning the issuance of the Certificate of Correction should be directed to the Certificates of Correction Branch at (703) 305-8309.

The file will be forwarded to the Certificates of Correction Branch for issuance of the requested Certificate of Correction.

Frances Hicks
Petitions Examiner
Office of Petitions
Office of the Deputy Commissioner
for Patent Examination Policy

RAM Fee History Query

Revenue Accounting and Management

Name/Number: 6365687

Total Records Found: 3

Start Date: Any Date

End Date: Any Date

Accounting Date	Sequence Num.	Tran Type	Fee Code	Fee Amount	Mailroom Date	Payment Method
04/15/2002	00000252	2	085	$160.00	04/15/2002	DA 501411
04/18/2002	00000016	2	085	-$160.00	04/15/2002	DA 501411
05/06/2002	00000207	2	145	$100.00	04/30/2002	OP

07883912.062002

UNITED STATES PATENT AND TRADEMARK OFFICE

COMMISSIONER FOR PATENTS
UNITED STATES PATENT AND TRADEMARK OFFICE
P.O. BOX 1450
ALEXANDRIA, VA 22313-1450
www.uspto.gov

OLE K. NILSSEN
200 N HARRISON STREET
SUITE 103
ALGONQUIN, IL 60102

COPY MAILED

APR 18 2006

OFFICE OF PETITIONS

NOTICE

In re Patent No. 5,214,356	:	
Issued: May 25, 1993	:	
Application No. 07/887,427	:	
Filed: May 21, 1992	:	
Patentee: Ole K. Nilssen	:	

This is a notice regarding your request for acceptance of a fee deficiency submission under 37 CFR 1.28. On September 1, 1998, the Court of Appeals for the Federal Circuit held that 37 CFR 1.28(c) is the sole provision governing the time for correction of the erroneous payment of the issue fee as a small entity. **See DH Technology v. Synergystex International, Inc. 154 F.3d 1333, 47 USPQ2d 1865 (Fed. Cir. Sept. 1, 1998).**

The Office no longer investigates or rejects original or reissue applications under 37 CFR 1.56. **1098 Off. Gaz. Pat. Office 502 (January 3, 1989)**. Therefore, nothing in this Notice is intended to imply that an investigation was done.

Your fee deficiency submission under 37 CFR 1.28 is hereby **ACCEPTED**.

Inquiries related to this communication should be directed to the Office of Petitions Staff at (571) 272-3282.

Sherry D. Brinkley
Petitions Examiner
Office of Petitions
Office of the Deputy Commissioner
for Patent Examination Policy

Under the Paperwork Reduction Act of 1995, no persons are required to respond to a collection of information unless it displays valid OMB control number.

PETITION TO ACCEPT UNINTENTIONALLY DELAYED PAYMENT OF MAINTENANCE FEE IN AN EXPIRED PATENT (37 CFR 1.378(c))

Patent Number	Issue Date (YYYY-MM-DD)	Application Number	Filing Date (YYYY-MM-DD)	Docket Number (if applicable)
5452093	1995-09-19	07888857	1992-05-27	ID 0496-07

CAUTION: Maintenance fee (and surcharge, if any) payment must correctly identify: (1) the patent number and (2) the application number of the actual U.S. application leading to issuance of that patent to ensure the fee(s) is/are associated with the correct patent. 37 CFR 1.366(c) and (d).

SMALL ENTITY
☐ Patentee claims, or has previously claimed, small entity status. See 37 CFR 1.27.

LOSS OF ENTITLEMENT TO SMALL ENTITY STATUS
☐ Patentee is no longer entitled to small entity status. See 37 CFR 1.27(g)

NOT Small Entity		Small Entity	
Fee	Code	Fee	Code
○ 3 ½ year	(1551)	○ 3 ½ year	(2551)
○ 7 ½ year	(1552)	○ 7 ½ year	(2552)
◉ 11 ½ year	(1553)	○ 11 ½ year	(2553)

SURCHARGE
The surcharge required by 37 CFR 1.20(i)(2) (Fee Code 1558) must be paid as a condition of accepting unintentionally delayed payment of the maintenance fee.

MAINTENANCE FEE (37 CFR 1.20(e)-(g))
The appropriate maintenance fee must be submitted with this petition.

STATEMENT
THE UNDERSIGNED CERTIFIES THAT THE DELAY IN PAYMENT OF THE MAINTENANCE FEE TO THIS PATENT WAS UNINTENTIONAL

PETITIONER(S) REQUEST THAT THE DELAYED PAYMENT OF THE MAINTENANCE FEE BE ACCEPTED AND THE PATENT REINSTATED

THIS PORTION MUST BE COMPLETED BY THE SIGNATORY OR SIGNATORIES

37 CFR 1.378(d) states: "Any petition under this section must be signed by an attorney or agent registered to practice before the Patent and Trademark Office, or by the patentee, the assignee, or other party in interest."

I certify, in accordance with 37 CFR 1.4(d)(4) that I am

◉ An attorney or agent registered to practice before the Patent and Trademark Office

○ A sole patentee

○ A joint patentee; I certify that I am authorized to sign this submission on behalf of all the other patentees.

○ A joint patentee; all of whom are signing this e-petition

○ The assignee of record of the entire interest

Patent Practitioner			
A signature of the applicant or representative is required in accordance with 37 CFR 1.33 and 10.18. Please see 37 CFR 1.4(d) for the form of the signature			
Signature	/DJCushing/	Date (YYYY-MM-DD)	2007-10-09
Name	David J. Cushing	Registration Number	28703

This collection of information is required by 37 CFR 1.378(c). The information is required to obtain or retain a benefit by the public which is to file (and by the USPTO to process) an application. Confidentiality is governed by 35 U.S.C. 122 and 37 CFR 1.11 and 1.14. This collection is estimated to take 1 hour to complete, including gathering, preparing, and submitting the completed application form to the USPTO. Time will vary depending upon the individual case. Any comments on the amount of time you require to complete this form and/ or suggestions for reducing this burden, should be sent to the Chief Information Officer, U.S. Patent and Trademark Office, U.S. Department of Commerce, P.O. Box 1450, Alexandria, VA 22313-1450. DO NOT SEND FEES OR COMPLETED FORMS TO THIS ADDRESS. **This form can only be used when in conjunction with EFS-Web. If this form is mailed to the USPTO, it may cause delays in reinstating the patent.**

Privacy Act Statement

The Privacy Act of 1974 (P.L. 93-579) requires that you be given certain information in connection with your submission of the attached form related to a patent application or patent. Accordingly, pursuant to the requirements of the Act, please be advised that: (1) the general authority for the collection of this information is 35 U.S.C. 2(b)(2); (2) furnishing of the information solicited is voluntary; and (3) the principal purpose for which the information is used by the U.S. Patent and Trademark Office is to process and/or examine your submission related to a patent application or patent. If you do not furnish the requested information, the U.S. Patent and Trademark Office may not be able to process and/or examine your submission, which may result in termination of proceedings or abandonment of the application or expiration of the patent.

The information provided by you in this form will be subject to the following routine uses:

1. The information on this form will be treated confidentially to the extent allowed under the Freedom of Information Act (5 U.S.C. 552) and the Privacy Act (5 U.S.C. 552a). Records from this system of records may be disclosed to the Department of Justice to determine whether the Freedom of Information Act requires disclosure of these record s.

2. A record from this system of records may be disclosed, as a routine use, in the course of presenting evidence to a court, magistrate, or administrative tribunal, including disclosures to opposing counsel in the course of settlement negotiations.

3. A record in this system of records may be disclosed, as a routine use, to a Member of Congress submitting a request involving an individual, to whom the record pertains, when the individual has requested assistance from the Member with respect to the subject matter of the record.

4. A record in this system of records may be disclosed, as a routine use, to a contractor of the Agency having need for the information in order to perform a contract. Recipients of information shall be required to comply with the requirements of the Privacy Act of 1974, as amended, pursuant to 5 U.S.C. 552a(m).

5. A record related to an International Application filed under the Patent Cooperation Treaty in this system of records may be disclosed, as a routine use, to the International Bureau of the World Intellectual Property Organization, pursuant to the Patent Cooperation Treaty.

6. A record in this system of records may be disclosed, as a routine use, to another federal agency for purposes of National Security review (35 U.S.C. 181) and for review pursuant to the Atomic Energy Act (42 U.S.C. 218(c)).

7. A record from this system of records may be disclosed, as a routine use, to the Administrator, General Services, or his/her designee, during an inspection of records conducted by GSA as part of that agency's responsibility to recommend improvements in records management practices and programs, under authority of 44 U.S.C. 2904 and 2906. Such disclosure shall be made in accordance with the GSA regulations governing inspection of records for this purpose, and any other relevant (i.e., GSA or Commerce) directive. Such disclosure shall not be used to make determinations about individuals.

8. A record from this system of records may be disclosed, as a routine use, to the public after either publication of the application pursuant to 35 U.S.C. 122(b) or issuance of a patent pursuant to 35 U.S.C. 151. Further, a record may be disclosed, subject to the limitations of 37 CFR 1.14, as a routine use, to the public if the record was filed in an application which became abandoned or in which the proceedings were terminated and which application is referenced by either a published application, an application open to public inspections or an issued patent.

9. A record from this system of records may be disclosed, as a routine use, to a Federal, State, or local law enforcement agency, if the USPTO becomes aware of a violation or potential violation of law or regulation.

UNITED STATES PATENT AND TRADEMARK OFFICE

Commissioner for Patents
United States Patent and Trademark Office
P.O. Box 1450
Alexandria, VA 22313-1450
www.uspto.gov

In re Patent No. 5452093
Issue Date: September 19,1995
Application No. 07888857
Filed: May 27,1992
Attorney Docket No. P53521

:
:DECISION GRANTING PETITION
:UNDER 37 CFR 1.378(c)
:

This is a decision on the electronic petition, filed October 9,2007 ,under 37 CFR 1.378(c) to accept the unintentionally delayed payment of the 11.5 year maintenance fee for the above-identified patent.

The petition is GRANTED.

The maintenance fee is accepted, and the above-identified patent reinstated as of October 9,2007 . This decision also constitutes notice that the fee has been accepted. An electronic copy of the petition and this decision has been created as an entry in an Image File Wrapper. Nevertheless, petitioner should print and retain an independent copy

Telephone inquires related to this electronic decision should be directed to the Electronic Business Center at 1-866-217-9197.

UNITED STATES PATENT AND TRADEMARK OFFICE

Commissioner for Patents
United States Patent and Trademark Office
P.O. Box 1450
Alexandria, VA 22313-1450
www.uspto.gov

Paper No. 71

GEORGE E. DARBY
P.O. BOX 893010
MILILANI HI 96789-3010
UNITED STATES (US)

COPY MAILED

MAR 20 2007

OFFICE OF PETITIONS

ON PETITION

In re Patent No. 5,695,965 :
Issue Date: December 9, 1997 :
Application No. 07/896,455 :
Filed: June 2, 1992 :
Attorney Docket No: HABI-004/01US :

This is a decision on the request for reconsideration filed February 5, 2007, under 37 CFR 1.378(c)[1], to accept the delayed payment of the maintenance fee for the above-identified patent.

The petition is **GRANTED**.

The patent issued on December 9, 1997. The second maintenance fee due could have been paid during the period from December 9, 2004 to June 9, 2005 or, with a surcharge during the period from June 10, 2005 to December 9, 2005. Accordingly, this patent expired on December 9, 2005, for failure to timely remit the maintenance fee.

Accordingly, the maintenance fee in this case is hereby accepted and the above-identified patent is hereby reinstated as of the mail date of this decision. Fees in the amount of $1,150.00 for the second maintenance fee and $1,640.00 for the surcharge have been applied as well as $400.00 for the instant request for reconsideration.

Telephone inquiries concerning this matter may be directed to the undersigned Petitions Attorney at (571) 272-3212.

Patricia Faison-Ball

Patricia Faison-Ball
Senior Petitions Attorney
Office of Petitions

---

[1] 37 CFR 1.378(c) provides that a petition to accept an unintentionally delayed payment of a maintenance fee must be filed within twenty-four months of the six-month grace period provided in § 1.362(e) and must include:
(1) The required maintenance fee set forth in § 1.20(e) through (g);
(2) The surcharge set forth in § 1.20(l)(2); and
(3) A statement that the delay in payment of the maintenance fee was unintentional.

Under the Paperwork Reduction Act of 1995, no persons are required to respond to a collection of information unless it displays valid OMB control number.

PETITION TO ACCEPT UNINTENTIONALLY DELAYED PAYMENT OF MAINTENANCE FEE IN AN EXPIRED PATENT (37 CFR 1.378(c))

Patent Number	Issue Date (YYYY-MM-DD)	Application Number	Filing Date (YYYY-MM-DD)	Docket Number (if applicable)
5,261,420	1993-11-16	07901808	1992-06-22	

CAUTION: Maintenance fee (and surcharge, if any) payment must correctly identify: (1) the patent number and (2) the application number of the actual U.S. application leading to issuance of that patent to ensure the fee(s) is/are associated with the correct patent. 37 CFR 1.366(c) and (d).

SMALL ENTITY
☒ Patentee claims, or has previously claimed, small entity status. See 37 CFR 1.27.

LOSS OF ENTITLEMENT TO SMALL ENTITY STATUS
☐ Patentee is no longer entitled to small entity status. See 37 CFR 1.27(g)

NOT Small Entity			Small Entity		
	Fee	Code		Fee	Code
○	3 ½ year	(1551)	○	3 ½ year	(2551)
○	7 ½ year	(1552)	○	7 ½ year	(2552)
○	11 ½ year	(1553)	◉	11 ½ year	(2553)

SURCHARGE
The surcharge required by 37 CFR 1.20(i)(2) (Fee Code 1558) must be paid as a condition of accepting unintentionally delayed payment of the maintenance fee.

MAINTENANCE FEE (37 CFR 1.20(e)-(g))
The appropriate maintenance fee must be submitted with this petition.

STATEMENT
THE UNDERSIGNED CERTIFIES THAT THE DELAY IN PAYMENT OF THE MAINTENANCE FEE TO THIS PATENT WAS UNINTENTIONAL

PETITIONER(S) REQUEST THAT THE DELAYED PAYMENT OF THE MAINTENANCE FEE BE ACCEPTED AND THE PATENT REINSTATED

THIS PORTION MUST BE COMPLETED BY THE SIGNATORY OR SIGNATORIES

37 CFR 1.378(d) states: "Any petition under this section must be signed by an attorney or agent registered to practice before the Patent and Trademark Office, or by the patentee, the assignee, or other party in interest."

I certify, in accordance with 37 CFR 1.4(d)(4) that I am

○ An attorney or agent registered to practice before the Patent and Trademark Office

◉ A sole patentee

○ A joint patentee; I certify that I am authorized to sign this submission on behalf of all the other patentees.

○ A joint patentee; all of whom are signing this e-petition

○ The assignee of record of the entire interest

Sole Patentee			
A signature of the applicant or representative is required in accordance with 37 CFR 1.33 and 10.18. Please see 37 CFR 1.4(d) for the form of the signature.			
Signature	/Josephine M. Grillo/	Date (YYYY-MM-DD)	2007-08-27
Name	Josephine M. Grillo		

This collection of information is required by 37 CFR 1.378(c). The information is required to obtain or retain a benefit by the public which is to file (and by the USPTO to process) an application. Confidentiality is governed by 35 U.S.C. 122 and 37 CFR 1.11 and 1.14. This collection is estimated to take 1 hour to complete, including gathering, preparing, and submitting the completed application form to the USPTO. Time will vary depending upon the individual case. Any comments on the amount of time you require to complete this form and/or suggestions for reducing this burden, should be sent to the Chief Information Officer, U.S. Patent and Trademark Office, U.S. Department of Commerce, P.O. Box 1450, Alexandria, VA 22313-1450. DO NOT SEND FEES OR COMPLETED FORMS TO THIS ADDRESS. **This form can only be used when in conjunction with EFS-Web. If this form is mailed to the USPTO, it may cause delays in reinstating the patent.**

Privacy Act Statement

The Privacy Act of 1974 (P.L. 93-579) requires that you be given certain information in connection with your submission of the attached form related to a patent application or patent. Accordingly, pursuant to the requirements of the Act, please be advised that: (1) the general authority for the collection of this information is 35 U.S.C. 2(b)(2); (2) furnishing of the information solicited is voluntary; and (3) the principal purpose for which the information is used by the U.S. Patent and Trademark Office is to process and/or examine your submission related to a patent application or patent. If you do not furnish the requested information, the U.S. Patent and Trademark Office may not be able to process and/or examine your submission, which may result in termination of proceedings or abandonment of the application or expiration of the patent.

The information provided by you in this form will be subject to the following routine uses:

1. The information on this form will be treated confidentially to the extent allowed under the Freedom of Information Act (5 U.S.C. 552) and the Privacy Act (5 U.S.C. 552a). Records from this system of records may be disclosed to the Department of Justice to determine whether the Freedom of Information Act requires disclosure of these record s.

2. A record from this system of records may be disclosed, as a routine use, in the course of presenting evidence to a court, magistrate, or administrative tribunal, including disclosures to opposing counsel in the course of settlement negotiations.

3. A record in this system of records may be disclosed, as a routine use, to a Member of Congress submitting a request involving an individual, to whom the record pertains, when the individual has requested assistance from the Member with respect to the subject matter of the record.

4. A record in this system of records may be disclosed, as a routine use, to a contractor of the Agency having need for the information in order to perform a contract. Recipients of information shall be required to comply with the requirements of the Privacy Act of 1974, as amended, pursuant to 5 U.S.C. 552a(m).

5. A record related to an International Application filed under the Patent Cooperation Treaty in this system of records may be disclosed, as a routine use, to the International Bureau of the World Intellectual Property Organization, pursuant to the Patent Cooperation Treaty.

6. A record in this system of records may be disclosed, as a routine use, to another federal agency for purposes of National Security review (35 U.S.C. 181) and for review pursuant to the Atomic Energy Act (42 U.S.C. 218(c)).

7. A record from this system of records may be disclosed, as a routine use, to the Administrator, General Services, or his/her designee, during an inspection of records conducted by GSA as part of that agency's responsibility to recommend improvements in records management practices and programs, under authority of 44 U.S.C. 2904 and 2906. Such disclosure shall be made in accordance with the GSA regulations governing inspection of records for this purpose, and any other relevant (i.e., GSA or Commerce) directive. Such disclosure shall not be used to make determinations about individuals.

8. A record from this system of records may be disclosed, as a routine use, to the public after either publication of the application pursuant to 35 U.S.C. 122(b) or issuance of a patent pursuant to 35 U.S.C. 151. Further, a record may be disclosed, subject to the limitations of 37 CFR 1.14, as a routine use, to the public if the record was filed in an application which became abandoned or in which the proceedings were terminated and which application is referenced by either a published application, an application open to public inspections or an issued patent.

9. A record from this system of records may be disclosed, as a routine use, to a Federal, State, or local law enforcement agency, if the USPTO becomes aware of a violation or potential violation of law or regulation.

UNITED STATES PATENT AND TRADEMARK OFFICE

Commissioner for Patents
United States Patent and Trademark Office
P.O. Box 1450
Alexandria, VA 22313-1450
www.uspto.gov

In re Patent No. 5261420
Issue Date: November 16,1993
Application No. 07901808
Filed: June 22,1992
Attorney Docket No. GRIL-B-33180

:
:DECISION GRANTING PETITION
:UNDER 37 CFR 1.378(c)
:

This is a decision on the electronic petition, filed August 27,2007 ,under 37 CFR 1.378(c) to accept the unintentionally delayed payment of the 11.5 year maintenance fee for the above-identified patent.

The petition is GRANTED.

The maintenance fee is accepted, and the above-identified patent reinstated as of August 27,2007 . This decision also constitutes notice that the fee has been accepted. An electronic copy of the petition and this decision has been created as an entry in an Image File Wrapper. Nevertheless, petitioner should print and retain an independent copy

Telephone inquires related to this electronic decision should be directed to the Electronic Business Center at 1-866-217-9197.

UNITED STATES PATENT AND TRADEMARK OFFICE

Commissioner for Patents
United States Patent and Trademark Office
P.O. Box 1450
Alexandria, VA 22313-1450
www.uspto.gov

MAY 30 2007

Teresa Stanek Rea
Burns, Doane, Swecker & Mathis
PO Box 1404
Alexandria VA 22313-1404

Re: Patent Term Extension
Application for
U.S. Patent No. 5,502,077

ACKNOWLEDGMENT OF WITHDRAWAL OF APPLICATION FOR PATENT TERM EXTENSION IN RESPONSE TO REQUIREMENT FOR ELECTION

This is in response to the Requirement for Election response filed on February 13, 2007 for patent term extension for U.S. Patent No. 5,502,077 (OMACOR® (EPA ethyl ester and DHA ethyl ester)).

The withdrawal of the application is hereby acknowledged and the application is dismissed.

Any correspondence with respect to this matter should be addressed as follows:

By mail: Mail Stop Hatch-Waxman PTE
P.O. Box 1450
Alexandria, VA 22313-1450

By FAX: (571) 273-0100

Telephone inquiries related to this determination should be directed to the undersigned at (571) 272-7755. E-mail inquiries should be directed to mary.till@uspto.gov.

Mary C. Till
Legal Advisor
Office of Patent Legal Administration
Office of the Deputy Commissioner
for Patent Examination Policy

cc: Office of Regulatory Policy
HFD - 7
5600 Fishers Lane (Rockwall II Rm. 1101)
Rockville, MD 20857

Attention: Beverly Friedman

RE: OMACOR® (EPA ethyl ester and DHA ethyl ester)
FDA Docket No.: 2005E-0233

Approved for use through 04/30/2009. OMB 0651-0016
U.S. Patent and Trademark Office: U.S. DEPARTMENT OF COMMERCE
Under the Paperwork Reduction Act of 1995, no persons are required to respond to a collection of information unless it displays valid OMB control number.

PETITION TO ACCEPT UNINTENTIONALLY DELAYED PAYMENT OF MAINTENANCE FEE IN AN EXPIRED PATENT (37 CFR 1.378(c))

Patent Number	Issue Date (YYYY-MM-DD)	Application Number	Filing Date (YYYY-MM-DD)	Docket Number (if applicable)
6673559	2004-01-06	07903588	1992-06-26	E-046-1991/3-US-01

CAUTION: Maintenance fee (and surcharge, if any) payment must correctly identify: (1) the patent number and (2) the application number of the actual U.S. application leading to issuance of that patent to ensure the fee(s) is/are associated with the correct patent. 37 CFR 1.366(c) and (d).

SMALL ENTITY
☐ Patentee claims, or has previously claimed, small entity status. See 37 CFR 1.27.

LOSS OF ENTITLEMENT TO SMALL ENTITY STATUS
☐ Patentee is no longer entitled to small entity status. See 37 CFR 1.27(g)

NOT Small Entity		Small Entity	
Fee	Code	Fee	Code
◉ 3 ½ year	(1551)	○ 3 ½ year	(2551)
○ 7 ½ year	(1552)	○ 7 ½ year	(2552)
○ 11 ½ year	(1553)	○ 11 ½ year	(2553)

SURCHARGE
The surcharge required by 37 CFR 1.20(i)(2) (Fee Code 1558) must be paid as a condition of accepting unintentionally delayed payment of the maintenance fee.

MAINTENANCE FEE (37 CFR 1.20(e)-(g))
The appropriate maintenance fee must be submitted with this petition.

STATEMENT
THE UNDERSIGNED CERTIFIES THAT THE DELAY IN PAYMENT OF THE MAINTENANCE FEE TO THIS PATENT WAS UNINTENTIONAL

PETITIONER(S) REQUEST THAT THE DELAYED PAYMENT OF THE MAINTENANCE FEE BE ACCEPTED AND THE PATENT REINSTATED

THIS PORTION MUST BE COMPLETED BY THE SIGNATORY OR SIGNATORIES

37 CFR 1.378(d) states: "Any petition under this section must be signed by an attorney or agent registered to practice before the Patent and Trademark Office, or by the patentee, the assignee, or other party in interest."

I certify, in accordance with 37 CFR 1.4(d)(4) that I am

◉ An attorney or agent registered to practice before the Patent and Trademark Office

○ A sole patentee

○ A joint patentee; I certify that I am authorized to sign this submission on behalf of all the other patentees.

○ A joint patentee; all of whom are signing this e-petition

○ The assignee of record of the entire interest

Patent Practitioner			
A signature of the applicant or representative is required in accordance with 37 CFR 1.33 and 10.18. Please see 37 CFR 1.4(d) for the form of the signature			
Signature	/Susan S. Rucker/	Date (YYYY-MM-DD)	2008-02-26
Name	Susan S. Rucker	Registration Number	35762

This collection of information is required by 37 CFR 1.378(c). The information is required to obtain or retain a benefit by the public which is to file (and by the USPTO to process) an application. Confidentiality is governed by 35 U.S.C. 122 and 37 CFR 1.11 and 1.14. This collection is estimated to take 1 hour to complete, including gathering, preparing, and submitting the completed application form to the USPTO. Time will vary depending upon the individual case. Any comments on the amount of time you require to complete this form and/ or suggestions for reducing this burden, should be sent to the Chief Information Officer, U.S. Patent and Trademark Office, U.S. Department of Commerce, P.O. Box 1450, Alexandria, VA 22313-1450. DO NOT SEND FEES OR COMPLETED FORMS TO THIS ADDRESS. **This form can only be used when in conjunction with EFS-Web. If this form is mailed to the USPTO, it may cause delays in reinstating the patent.**

Privacy Act Statement

The Privacy Act of 1974 (P.L. 93-579) requires that you be given certain information in connection with your submission of the attached form related to a patent application or patent. Accordingly, pursuant to the requirements of the Act, please be advised that: (1) the general authority for the collection of this information is 35 U.S.C. 2(b)(2); (2) furnishing of the information solicited is voluntary; and (3) the principal purpose for which the information is used by the U.S. Patent and Trademark Office is to process and/or examine your submission related to a patent application or patent. If you do not furnish the requested information, the U.S. Patent and Trademark Office may not be able to process and/or examine your submission, which may result in termination of proceedings or abandonment of the application or expiration of the patent.

The information provided by you in this form will be subject to the following routine uses:

1. The information on this form will be treated confidentially to the extent allowed under the Freedom of Information Act (5 U.S.C. 552) and the Privacy Act (5 U.S.C. 552a). Records from this system of records may be disclosed to the Department of Justice to determine whether the Freedom of Information Act requires disclosure of these record s.

2. A record from this system of records may be disclosed, as a routine use, in the course of presenting evidence to a court, magistrate, or administrative tribunal, including disclosures to opposing counsel in the course of settlement negotiations.

3. A record in this system of records may be disclosed, as a routine use, to a Member of Congress submitting a request involving an individual, to whom the record pertains, when the individual has requested assistance from the Member with respect to the subject matter of the record.

4. A record in this system of records may be disclosed, as a routine use, to a contractor of the Agency having need for the information in order to perform a contract. Recipients of information shall be required to comply with the requirements of the Privacy Act of 1974, as amended, pursuant to 5 U.S.C. 552a(m).

5. A record related to an International Application filed under the Patent Cooperation Treaty in this system of records may be disclosed, as a routine use, to the International Bureau of the World Intellectual Property Organization, pursuant to the Patent Cooperation Treaty.

6. A record in this system of records may be disclosed, as a routine use, to another federal agency for purposes of National Security review (35 U.S.C. 181) and for review pursuant to the Atomic Energy Act (42 U.S.C. 218(c)).

7. A record from this system of records may be disclosed, as a routine use, to the Administrator, General Services, or his/her designee, during an inspection of records conducted by GSA as part of that agency's responsibility to recommend improvements in records management practices and programs, under authority of 44 U.S.C. 2904 and 2906. Such disclosure shall be made in accordance with the GSA regulations governing inspection of records for this purpose, and any other relevant (i.e., GSA or Commerce) directive. Such disclosure shall not be used to make determinations about individuals.

8. A record from this system of records may be disclosed, as a routine use, to the public after either publication of the application pursuant to 35 U.S.C. 122(b) or issuance of a patent pursuant to 35 U.S.C. 151. Further, a record may be disclosed, subject to the limitations of 37 CFR 1.14, as a routine use, to the public if the record was filed in an application which became abandoned or in which the proceedings were terminated and which application is referenced by either a published application, an application open to public inspections or an issued patent.

9. A record from this system of records may be disclosed, as a routine use, to a Federal, State, or local law enforcement agency, if the USPTO becomes aware of a violation or potential violation of law or regulation.

UNITED STATES PATENT AND TRADEMARK OFFICE

Commissioner for Patents
United States Patent and Trademark Office
P.O. Box 1450
Alexandria, VA 22313-1450
www.uspto.gov

In re Patent No. 6673559
Issue Date: January 6,2004
Application No. 07903588
Filed: June 26,1992
Attorney Docket No. 40399/167/NI

:DECISION GRANTING PETITION
:UNDER 37 CFR 1.378(c)

This is a decision on the electronic petition, filed February 26,2008 ,under 37 CFR 1.378(c) to accept the unintentionally delayed payment of the 3.5 year maintenance fee for the above-identified patent.

The petition is GRANTED.

The maintenance fee is accepted, and the above-identified patent reinstated as of February 26,2008 . This decision also constitutes notice that the fee has been accepted. An electronic copy of the petition and this decision has been created as an entry in an Image File Wrapper. Nevertheless, petitioner should print and retain an independent copy

Telephone inquires related to this electronic decision should be directed to the Electronic Business Center at 1-866-217-9197.

UNITED STATES PATENT AND TRADEMARK OFFICE

Commissioner for Patents
United States Patent and Trademark Office
P.O. Box 1450
Alexandria, VA 22313-1450
www.uspto.gov

Paper No. 13

UNILEVER INTELLECTUAL PROPERTY GROUP
700 SYLVAN AVENUE,
BLDG C2 SOUTH
ENGLEWOOD CLIFFS NJ 07632-3100

COPY MAILED

SEP 29 2005

OFFICE OF PETITIONS

Patentee: Barnett et al.
Patent No. 5,268,166

Application No. 07/910,942
Filed: July 9, 1992
Issue Date: December 7, 1993
Title of Invention: Cosmetic Application System

ON PETITION

This is a decision on the petition filed April 18, 2005, under 37 CFR 1.378(b), to accept the unavoidably delayed payment of a maintenance fee for the above-identified patent.

The petition is **DISMISSED**.

The patent issued December 7, 1993. The 7.5 year maintenance fee could have been paid from December 7, 2000 to June 7, 2001, or with a surcharge during the period from June 8, 2001 to December 7, 2001. Petitioner did not do so. Accordingly, the patent expired December 7, 2003.

A grantable petition under 37 CFR 1.378(b) must be accompanied by a showing <u>to the satisfaction of the Director</u> that the <u>entire</u> delay in paying the required maintenance fee from the due date for the fee until the filing of grantable petition pursuant to this paragraph was <u>unavoidable</u>.

Pursuant to 37 CFR 1.378(b) a petition to accept an unavoidably delayed payment of a maintenance fee must include:

(1) The required maintenance fee set forth in §1.20 (e) through (g);

(2) The surcharge set forth in §1.20(l)(1); and

(3) A showing that the delay was unavoidable since reasonable care was taken to ensure the maintenance fee would be paid timely and that the petition was filed promptly after the patentee was notified of, or otherwise became aware of, the expiration of the patent. The showing must enumerate the steps taken to ensure timely payment of the maintenance fee, the date and the manner in which patentee became aware of the expiration of the patent and the steps taken to file the petition promptly.

As to item (3), the showing of record is not sufficient to establish to the satisfaction of the Director that delay was unavoidable within the meaning of 37 CFR 1.378(b).

The general standard applied by the Office requires petitioner to establish that petitioner treated the patent the same as a reasonable and prudent person would treat his or her most important business.[1] However, " The question of whether an applicant's delay in prosecuting an application was unavoidable [will] be decided on a case by case basis, taking all of the facts and circumstances into account."[2] Nonawareness of the content of, or misunderstanding of PTO statues, PTO rules, the MPEP or Official Gazette notices, do not constitute unavoidable delay.[3] The statue requires a "showing" by petitioner. Therefore, petitioner has the burden of proof.

The word 'unavoidable' ... is applicable to ordinary human affairs, and requires no more or greater care or diligence than is generally used and observed by prudent and careful men in relation to their most important business.[4]

---

[1] The Director is responsible for determining the standard for unavoidable delay and for applying that standard 35 U.S.C. 41(c)(1) states, "The Director may accept the payment of any maintenance fee...at any time...if the delay is shown to the *satisfaction of the Director* to have been unavoidable (emphasis added).

[2] Smith v. Mossinghoff, 671 F.2d 533,538, 213 U.S.P.Q. (BNA) 977 (1982). (citing Potter v. Dann, 201 U.S.P.Q. (BNA) 574 (D.D.C. 1978) for the proposition that counsel's nonawareness of PTO rules does not constitute unavoidable delay)); Vincent v. Mossinghoff, 1985 U.S. Dist. Lexis 23119, 13 230 U.S.P.Q. (BNA) 621 (D.D.C. 1985) (Plaintiffs through their counsel's actions or their own must be held responsible for having noted the MPEP section and Official Gazette notices expressly stating that the certified mailing procedures outlined in 37 CFR 1.8(a) do not apply to continuation applications).

[3] Id.

[4] In re Mattullath, 38 App. D.C. 497, 514-15 (1912)(*quoting* Ex parte Pratt, 1887 Dec. Comm'r Pat. 31, 32-33 (1887)); see also Winkler v. Ladd, 221 F. Supp. 550, 552, 138 U.S.P.Q. 666, 167-68 (D.D.C. 1963), aff'd, 143 U.S.P.Q. 172 (D.C. Cir. 1963); Ex parte Henrich, 1913 Dec. Comm'r Pat. 139, 141 (1913).

Application of the unavoidable standard to the present facts

In the instant petition, petitioner contends the delay in timely submitting the 7.5 year maintenance fee was unavoidable because reasonable care was taken to ensure that the maintenance fee would be timely submitted.

* On October 30, 2000 French Fragrances, Inc. ("FFI") and Unilever, N.V. entered into an Asset Purchase Agreement where FFI purchased Elizabeth Arden and Elizabeth Taylor cosmetics and fragrances businesses ("Arden Businesses") from Conopco, Inc. a Unilever subsidiary. The assets included the above-identified patent and the related licenses. FFI changed its corporate name to Elizabeth Arden, Inc ("Arden").

* After the closing, the Arden portfolio consisted of 5,350 trademark registrations and pending applications, and 792 patents and patent applications.

* The assets were identified on schedules prepared by Unilever and included as part of the Asset Purchase Agreement. The agreement and schedules were reviewed by FFI's corporate counsel, Weil Gotshal and Manges.

* Schedule 4.18(j) of the Asset Purchase Agreement identified 33 patents as being subject to pending licenses. Two patents including the above-identified patent were omitted from schedule 4.18(j).

* Prior to the closing, the patent and trademark files included in the Asset Purchase Agreement were transferred from Unilever to the law firm of Abelman, Frayne & Schwab ("Abelman"). Abelman was designated counsel of the acquired Arden portfolio.

* Abelman advised Arden when maintenance fees were due.

* On June 26, 2001, Cathy-Shore-Sirotin was hired by Arden as assistant general counsel. Ms. Shore's responsibilities included supervision of IP matters.

* In order to reduce expenditures Arden decided to forgo payment of maintenance fees on patents not currently being used by Arden or indirectly by licensees.

* Abelman provided Attorney Shore with a list of current Arden patents. The patents were outlined on two enclosures. Enclosure A contained a list of patents with maintenance fee due dates in June, July and August. The above-identified patent was not included despite the fact that it was due in June.

* Enclosure B was a list of current Arden patents. It is noted that the above-identified patent was included in enclosure B.

* After a conversation with Anthony Vargas, Director of R&D, skincare product

development at Arden, Attorney Shore indicated to Abelman that the above-identified patent should be dropped i.e. the maintenance fee payment not submitted. Mr. Vargas believed the patent was not being used by Arden and was not subject to a license agreement.

* In March 2002, Attorney Shore was advised by Milton Honig, Chief Patent Counsel for Unilever that the above-identified patent had been licensed to Mystic Tan, Inc. Petitioner contends this was the first indication there were errors in the Asset Purchase Agreement.

*On March 19, 2002, Attorney Shore notified Abelman via e-mail that the above-identified patent should not be dropped.

*Pat Tormey, an Abelman paralegal, informed Attorney Shore the maintenance fee for the above-identified patent had not been paid but could be revived with the filing of a petition.

* Ms. Shore indicated to Ms. Tormey that the above-identified patent should be paid provided it was with the range of $4600. 00. Otherwise ,Attorney Shore indicated she would discuss the matter the next day with Joe Catanzaro, a partner at Abelman.

* At the meeting Attorney Shore confirmed with Attorney Catanzaro that a petition should be filed.

* During the Spring of 2002, the Arden portfolio was transferred to the Law Firm of Karl Ross ("Ross") to reduce expenses.

* On October 4, 2002, Ross wrote to Arden that the above-identified patent had been entered into Ross' maintenance fee docket.

* It was latter discovered that Attorney Catanzaro sent a letter on October 21, 2002 to Ross advising them that Ms. Shore had requested that Abelman file a petition to reinstate the above-identified patent and suggested that Ross follow up with the request. Ross received the letter but never acted.

* Frances Weber, an attorney at Kalow & Springgut ("Kalow") discovered the letter and discussed the it with a Partner at Ross who had no recollection of receiving the letter.

* A petition to revive was never filed.

* The lapse in the patent was discovered when an attorney for the licensee contacted Arden and informed them a declaratory judgement action had been filed.

* Kalow conducted an investigation and filed the present petition.

Petitioner's arguments have been considered but are unpersuasive to establish unavoidable delay. Petitioner states that Abelman and Arden were under a great deal of pressure after the Asset Purchase Agreement and they had to pay "catch up". Petitioner further argues that it was reasonable for Arden to rely upon the schedules prepared by Unilever and reviewed by Arden's corporate counsel, Weil Gotshal, & Manges. It was during this period that the above-identified patent's 7.5 year maintenance fee became due. However, a patent should not be purchased without proper investigation into the status of the patent. It does not appear that petitioner took any steps to independently investigate the status of the patent, but relied solely on the schedules, specifically schedule 4.18(j) provided by Unilever. Further although petitioner indicates the files were directly transferred from Unilever to Abelman, it ultimately was petitioner's responsibility to maintain the patent. Upon the purchase of a patent a reasonable and prudent person would take immediate steps to ensure steps were in place to maintain the patent.

Petitioner has presented a scenario in which Arden sought to reduce expenditures. Attorney. Shore who had the authority to do so, told Abelman not to pay the maintenance fee. Even if the basis of the decision was incorrect (discussion with Anthony Vargas), petitioner's argument merely shows that Arden reached a decision that the above-identified patent lacked sufficient commercial value to justify the expense of paying the maintenance fee. Such a conclusion of lack of commercial value is neither unavoidable nor is it unintentional. A deliberate act is not rendered unintentional or unavoidable when an applicant or assignee reviews the same facts a second time, which changes their minds as to the appropriate action to pursue.[5]

Lastly, petitioner contends that the failure of the attorneys at Abelman and Ross lead to the delay in submitting a petition to revive. Petitioner had a responsibility to monitor the law firms of Abelman and Ross' performance under an alleged contract or diligently inquire of the attorney or the USPTO into the status of the patent. Failure to monitor the status of a patent, does not reflect the due care and diligence employed by a prudent and careful person with respect to their most important business and as such cannot demonstrate that the delay was unavoidable delay. The record lacks any showing that the attorney or any firm associated with this patent ever represented to petitioner that the maintenance fee had been paid, much less that petitioner ever paid the attorney for services rendered with respect to the maintenance fee payment. There is no indication that Arden ever contacted Abelman or Ross to ensure that the petition to revive had been filed.

Further, the Office is not convinced that the letter from the Ross Firm indicated that the petition to revive had been filed and the patent had been reinstated. The letter appears to be a form letter informing assignee of the maintenance fee due dates for the above-identified patent. There is no indication in the letter that the patent has been reinstated.

---

[5] In re Application G, 11 USPQ2d 1378 (Comm'r Pat. 1989).

The failure of attorney Catanzaro and the attorney's at Ross to file the petition goes to attorney error. A delay resulting from an attorney's preoccupation with other legal matters or with the attorney's inadvertence or mistake is not sufficient to establish to the satisfaction of the Director that the delay was unavoidable within the meaning of 35 USC 151 and 37 CFR 1.378 Mossinghoff, 671 F.2d at 536. The U.S. Patent and Trademark Office must rely on the actions or inactions of duly authorized and voluntarily chosen representatives of the applicant, and the applicant is bound by the consequences of those actions or inactions.[6] Specifically, petitioner's delay caused by the mistakes or negligence of his voluntarily chosen representative does not constitute unavoidable delay within the meaning of 35 U.S.C. 133 or 37 CFR 1.137(a).[7] Furthermore, petitioner is reminded that the Patent and Trademark Office is not the proper forum for resolving a dispute between petitioner and petitioner's representative.[8]

Accordingly, petitioner has not presented sufficient facts to establish the delay in submitting the 7.5 year maintenance fee was "unavoidable".

Petitioner's current options

I. Petitioner may file a request for reconsideration.

Any request for reconsideration of this decision must be filed within **TWO MONTHS** of the mailing date of this decision. Any such petition for reconsideration must be accompanied by the $400 petition fee set forth in §1.17(h). After decision on the petition for reconsideration, no further reconsideration or review of the matter will be undertaken by the Director. Accordingly, on request for reconsideration, it is extremely important the petitioner supply **any** and **all** relevant information and documentation in order to meet his burden of showing unavoidable delay. This includes statements by all persons with direct knowledge of the cause of the delay, setting forth the facts as they know them. If a request for reconsideration is filed, it must establish that the entire delay in the submission of the maintenance fee was unavoidable.

II. Petitioner may request a refund of the maintenance fee and surcharge which accompanied the petition.

Petitioner may a request a refund of the maintenance fee and surcharge by writing to the Office of Finance, Commissioner for Patents, P.O. Box 1450,Alexandria, VA 22313. A copy

---

[6] Link v. Wabash, 370 U.S. 626, 633-34 (1962).

[7] Haines v. Quigg, 673 F. Supp. 314, 5 USPQ2d 1130 (D. Ind. 1987); Smith v. Diamond, 209 USPQ 1091 (D.D.C. 1981); Potter v. Dann, 201 USPQ 574 (D.D.C. 1978); Ex parte Murray, 1891 Dec. Comm'r Pat. 130, 131 (Comm'r Pat. 1891).

[8] Ray v. Lehman, 55 F.3d 606, 608-09, 34 USPQ2d 1786, 1787 (Fed. Cir. 1995).

of this decision should accompany petitioner's request.

Further correspondence with respect to this matter should be addressed as follows:

By mail:	Mail Stop Petition Commissioner for Patents P.O. Box 1450 Alexandria, VA 22313-1450
By facsimile:	(571) 273-8300
By delivery service: (FedEx, UPS, DHL, etc.)	U.S. Patent and Trademark Office Customer Window, Mail Stop Petition Randolph Building 401 Dulany Street Alexandria, VA 22314

Telephone inquiries should be directed to the undersigned at (571) 272-3215.

Charlema R. Grant

Charlema R. Grant
Petitions Attorney
Office of Petitions

UNITED STATES PATENT AND TRADEMARK OFFICE

Commissioner for Patents
United States Patent and Trademark Office
P.O. Box 1450
Alexandria, VA 22313-1450
www.uspto.gov

Paper No. 15

UNILEVER INTELLECTUAL PROPERTY GROUP
700 SYLVAN AVENUE,
BLDG C2 SOUTH
ENGLEWOOD CLIFFS NJ 07632-3100

COPY MAILED

SEP 11 2006

OFFICE OF PETITIONS

Patentee: Barnett et al.
Patent No. 5,268,166
Application No. 07/910,942
Filed: July 9, 1992
Issue Date: December 7, 1993
Title of Invention: Cosmetic Application System

ON PETITION

This is a decision on the petition under 37 CFR 1.378(e), filed on November 28, 2005, requesting reconsideration of a prior decision refusing to accept under 37 CFR 1.378(b) the delayed payment of a maintenance fee for the above-identified patent.

The petition under 37 CFR 1.378(e) is **DENIED**.[1]

BACKGROUND

The above-identified patent issued December 7, 1993. The 7.5 year maintenance fee could have been paid from December 7, 2000 to June 7, 2001, or with a surcharge during the period from June 8, 2001 to December 7, 2001. The maintenance fee was not timely paid. Accordingly, the patent expired at midnight December 7, 2001.

A petition to accept the delayed payment of the maintenance fee pursuant to 37 CFR 1.378(b) was filed on April 18, 2005 and dismissed on September 29, 2005.

The instant petition requests reconsideration of the decision of September 29, 2005. The request for reconsideration is accompanied by declarations of Cathy E. Shore-Sirotin and Oscar E. Marina.

---

[1]This decision may be viewed as a final agency action within the meaning of 5 U.S.C. §704 for purposes of seeking judicial review. See MPEP 1002.02

STATUTE AND REGULATION

35 U.S.C. § 41 (c)(1) states that :

> The Director may accept the payment of any maintenance fee required by subsection (b) of this section...after the six-month grace period if the delay is shown to the satisfaction of the Director to have been unavoidable.

A petition under 37 CFR 1.378(b) to accept an unavoidably delayed payment of a maintenance fee must include:

(1) The required maintenance fee set forth in §1.20 (e) through (g);

(2) The surcharge set forth in §1.20(l)(1); and

(3) A showing that the delay was unavoidable since reasonable care was taken to ensure the maintenance fee would be paid timely and that the petition was filed promptly after the patentee was notified of, or otherwise became aware of, the expiration of the patent. The showing must enumerate the steps taken to ensure timely payment of the maintenance fee, the date and the manner in which patentee became aware of the expiration of the patent and the steps taken to file the petition promptly.

OPINION

A petition under 37 CFR 1.378(b) for the acceptance of an unavoidably delayed payment of maintenance fee is considered under the same standard as that for reviving an application unavoidably abandoned under 37 CFR 1.137(a) because 35 U.S.C. § 41(c)(1) uses the identical language, *i.e.*, "unavoidable" delay.[2] Decisions reviving abandoned applications have adopted the reasonably prudent person standard in determining if the delay was unavoidable.[3] To meet this standard, petitioner must establish that he or she treated the patent the same as a reasonably prudent person would treat his or her most important business. In addition, decisions on revival are

---

[2] Ray v. Lehman, 55 F.3d 606, 608-09, 34 USPQ2d 1786, 1787 (Fed. Cir. 1995)(quoting In re Patent No. 4,409,763, 7 USPQ2d 1798, 1800 (Comm'r Pat. 1988)).

[3] Ex parte Pratt, 1887 Dec. Comm'r Pat. 31, 32-33 (Comm'r Pat. 1887) (the term "unavoidable" "is applicable to ordinary human affairs, and requires no more or greater care or diligence than is generally used and observed by prudent and careful man in relation to their most important business"); In re Mattullath, 38 App. D.C. 497, 514-15 (D.C. Cir. 1912); Ex parte Henrich, 1913 Dec. Comm'r Pat. 139, 141 (Comm'r Pat. 1913).

made on a "case-by-case basis, taking all the facts and circumstances into account."[4] Finally, a petition to revive an application as unavoidably abandoned cannot be granted where a petitioner has failed to meet his or her burden of establishing that the delay was unavoidable.[5]

The instant petition asserts:
1. Arden acted prudently in entering into the Purchase Agreement;
2. Arden did not second guess its decision to pay the maintenance fee; and
3. It was reasonable and prudent for Arden to rely upon advice of counsel.

The petition under 37 CFR 1.378(e) has been considered. However, the showing of record is not sufficient to establish to the satisfaction of the Director that the delay was unavoidable within the meaning of 35 U.S.C. § 41(c)(1) and 37 CFR 1.378(b). A showing of unavoidable delay requires a showing that the **entire** delay in filing a grantable petition under 37 CFR 1.378(b) was unavoidable. In re Application of Takao, 17 USPQ2d 1155,1158 (Comm'r Pat. 1990). For reasons below, the record fails to establish that the entire delay was unavoidable.

A. Arden Did Not Act Prudently in Reviewing the Patents Purchased.

Petitioner insists that Arden acted prudently when entering into the purchase agreement. The purchase agreement was entered on October of 2000 and concluded in June of 2001.[6] Petitioner contends the window for paying the maintenance fee did not open until December 2000 and the transaction was completed by January 2001. Petitioner states any investigation during the transaction would have shown that the patent was still enforce. However, a review of the purchase agreement/all schedules would have shown that two patents had been left off of schedule 4.18(j). Schedule 4.18(j) was Unilever's listing of patents subject to licensing. A patent should not be purchased without proper investigation into the status of the patent. The other schedules provided by Unilever informed Arden that there was a patent which was subject to maintenance fee payments. A prudent person would track all patents, not just patents that were contained on a schedule provided by the seller. Upon the purchase of a patent a reasonable and prudent person would take immediate steps to ensure steps were in place to maintain the patent.

---

[4]Smith v. Mossinghoff, 671 F.2d 533, 538, 213 USPQ 977, 982 (D.C. Cir. 1982) (citing Potter v. Dann, 201 U.S.P.Q. (BNA) 574 (D.D.C. 1978) for the proposition that counsel's nonawareness of PTO rules does not constitute unavoidable delay)); Vincent v. Mossinghoff, 1985 U.S. Dist. Lexis 23119, 13 230 U.S.P.Q. (BNA) 621 (D.D.C. 1985) (Plaintiffs through their counsel's actions or their own must be held responsible for having noted the MPEP section and Official Gazette notices expressly stating that the certified mailing procedures outlined in 37 CFR 1.8(a) do not apply to continuation applications).

[5]Haines v. Quigg, 673 F. Supp. 314, 5 USPQ2d 1130 (N.D. Ind. 1987).

[6]Renewed petition, pg. 3.

Further on renewed petition, petitioner acknowledges evidence has been located which establishes that Arden was or should have been aware that there was a licensing agreement for the above-identified patent as early as March of 2001.[7] Thus a prudent person would have reviewed the documents received with the purchase agreement or confirmed that counsel was aware that the patent needed to be added to schedule 4.18(j).

B. Delay was caused in part by Arden's reevaluation of the value of the patent.

Petitioner's contention that the petition decision considered under 37 CFR 1.378 mischaracterizes the decision not to pay the maintenance fee is not persuasive. Here, petitioner contends that the reevaluation whether to pay the maintenance fee was based upon discovering new facts rather than a reevaluation of the same facts. Petitioner further contends that once new facts were discovered, Arden's counsel was directed to file a petition under the unintentional standard.

35 U.S.C. 133 and 151 each require a showing that the "delay" was "unavoidable," which requires not only a showing that the delay which resulted in the abandonment of the application was unavoidable, but also a showing of unavoidable delay until the filing of a petition to revive. See In re Application of Takao, 17 USPQ2d 1155 (Comm'r Pat. 1990). The patent was abandoned when counsel for Arden Ms. Shore told counsel at Abelman not to submit the 7.5 year maintenance fee payment. The goal was to reduce corporate IP expenses.[8] The fact that Ms. Shore was not aware that there was a licensing agreement does not change the fact that there was a deliberate decision not to pay the 7.5 year maintenance fee. The belated request to reinstate under the unintentional standard after learning that there was a licensing agreement for the above-identified patent does not make the abandonment unavoidable. As set forth in MPEP 711.03(c):

> *...[W]here the applicant deliberately chooses not to seek or persist in seeking the revival of an abandoned application, or where the applicant deliberately chooses to delay seeking the revival of an abandoned application, the resulting delay in seeking revival of the abandoned application cannot be considered as "unintentional" within the meaning of 37 CFR 1.137(b). An intentional delay resulting from a deliberate course of action chosen by the applicant is not affected by:*
> *(A) the correctness of the applicant's (or applicant's representative's) decision to abandon the application or not to seek or persist in seeking revival of the application;*

---

[7] Renewed petition, pg. 2.

[8] Id, pg. 5. and Mystic Tan Letter (3/1/01)

(B) the correctness or propriety of a rejection, or other objection, requirement, or decision by the Office; or
(C) the discovery of new information or evidence, or other change in circumstances subsequent to the abandonment or decision not to seek or persist in seeking revival.

Petitioner intended to not pay the maintenance fee because there was no known licensing agreement. In other words, the above-identified patent lacked sufficient commercial value to justify the expense of paying the maintenance fee. Even to the extent that the decision not to pay the maintenance fee and subsequent effort to reinstate was based upon new information i.e. the licensing agreement, it does not equate to unavoidable delay. Delaying the revival of an abandoned application, by a deliberately chosen course of action, until the industry or a competitor shows an interest in the invention is the antithesis of an "unavoidable" or "unintentional" delay. An intentional abandonment of an application, or an intentional delay in seeking the revival of an abandoned application, precludes a finding of unavoidable or unintentional delay pursuant to 37 CFR 1.137. See Maldague, 10 USPQ2d at 1478.

C. Attorney Error is not Unavoidable Delay.

Petitioner argues it was reasonable and prudent to rely on the actions of the various attorneys involved with this patent. Petitioner states after requesting the patent be reinstated, Ms. Shore continued to follow-up with Arden's lawyers at Abelman. Petitioner further contends the Ross firm informed Arden that the maintenance fee department verified patent data with publicly available sources to ensure data in the docket system was accurate. As evidence petitioner has submitted an e-mail from Andrew Wilford, a partner at the Ross Firm which indicates the general procedure when a patent was entered into the Ross docketing system. Petitioner states the fact the patent was entered into the Ross Firm's docketing system, supports the believe that the patent was in full force.

Petitioner has failed to provide sufficient evidence of the steps of the two law firms in place to ensure the timely submission of the maintenance fee and the filing of a petition for reinstatement.

The U.S. Patent and Trademark Office must rely on the actions or inactions of duly authorized and voluntarily chosen representatives of the applicant, and the applicant is bound by the consequences of those actions or inactions.[9] Specifically, petitioner's delay caused by the mistakes or negligence of his voluntarily chosen representative does not constitute unavoidable delay within the meaning of 35 U.S.C. 133 or 37 CFR

[9] Link v. Wabash, 370 U.S. 626, 633-34 (1962).

1.137(a).[10] A delay resulting from an attorney's preoccupation with other legal matters or with the attorney's inadvertence or mistake is not sufficient to establish to the satisfaction of the Commissioner that the delay was unavoidable within the meaning of 35 USC 151 and 37 CFR 1.137(a). Mossinghoff, 671 F.2d at 536. Case law is clear that the mistakes of an attorney do not rise to the level of unavoidable delay and that the actions of patentees representatives are imputed onto patentee.[11] The assurances that petitioner may have received with regard to reinstatement of the patent does not rise to the level of gross negligence nor does it supersede the acts of Arden.

CONCLUSION

The prior decision which refused to accept under §1.378(b) the delayed payment of a maintenance fee for the above-identified patent has been reconsidered. For the above stated reasons, the delay in this case cannot be regarded as unavoidable within the meaning of 35 U.S.C. § 41(c)(1) and 37 CFR 1.378(b).

Since this patent will not be reinstated, a refund covering the maintenance fee and surcharge fee will be forwarded to petitioner.

As stated 37 CFR 1.378(e), no further reconsideration or review of this matter will be undertaken.

The application is being forwarded to Files Repository.

Telephone inquiries should be directed to Petitions Attorney Charlema R. Grant at (571) 272-3215.

Charles Pearson
Director, Office of Petitions
Office of the Deputy Commissioner
for Patent Examination Policy

cc: Scott D. Locke
Kalow & Springut, LLP
488 Madison Avenue 19th Floor
New York, NY 10022

---

[10] Haines v. Quigg, 673 F. Supp. 314, 5 USPQ2d 1130 (D. Ind. 1987); Smith v. Diamond, 209 USPQ 1091 (D.D.C. 1981); Potter v. Dann, 201 USPQ 574 (D.D.C. 1978); Ex parte Murray, 1891 Dec. Comm'r Pat. 130, 131 (Comm'r Pat. 1891).

[11] See. California v. Medical Products, Inc. v. Tecnol Medical Products, Inc, 921 F. Supp 1219 and Haines v. Quigg 673 F. Supp 314,

Under the Paperwork Reduction Act of 1995, no persons are required to respond to a collection of information unless it displays valid OMB control number.

PETITION TO ACCEPT UNINTENTIONALLY DELAYED PAYMENT OF MAINTENANCE FEE IN AN EXPIRED PATENT (37 CFR 1.378(c))

Patent Number	Issue Date (YYYY-MM-DD)	Application Number	Filing Date (YYYY-MM-DD)	Docket Number (if applicable)
5222621	1993-06-29	07911722	1992-07-10	

CAUTION: Maintenance fee (and surcharge, if any) payment must correctly identify: (1) the patent number and (2) the application number of the actual U.S. application leading to issuance of that patent to ensure the fee(s) is/are associated with the correct patent. 37 CFR 1.366(c) and (d).

SMALL ENTITY
☐ Patentee claims, or has previously claimed, small entity status. See 37 CFR 1.27.

LOSS OF ENTITLEMENT TO SMALL ENTITY STATUS
☒ Patentee is no longer entitled to small entity status. See 37 CFR 1.27(g)

NOT Small Entity		Small Entity	
Fee	Code	Fee	Code
○ 3 ½ year	(1551)	○ 3 ½ year	(2551)
○ 7 ½ year	(1552)	○ 7 ½ year	(2552)
◉ 11 ½ year	(1553)	○ 11 ½ year	(2553)

SURCHARGE
The surcharge required by 37 CFR 1.20(i)(2) (Fee Code 1558) must be paid as a condition of accepting unintentionally delayed payment of the maintenance fee.

MAINTENANCE FEE (37 CFR 1.20(e)-(g))
The appropriate maintenance fee must be submitted with this petition.

STATEMENT
THE UNDERSIGNED CERTIFIES THAT THE DELAY IN PAYMENT OF THE MAINTENANCE FEE TO THIS PATENT WAS UNINTENTIONAL

PETITIONER(S) REQUEST THAT THE DELAYED PAYMENT OF THE MAINTENANCE FEE BE ACCEPTED AND THE PATENT REINSTATED

THIS PORTION MUST BE COMPLETED BY THE SIGNATORY OR SIGNATORIES

37 CFR 1.378(d) states: "Any petition under this section must be signed by an attorney or agent registered to practice before the Patent and Trademark Office, or by the patentee, the assignee, or other party in interest."

I certify, in accordance with 37 CFR 1.4(d)(4) that I am

◉ An attorney or agent registered to practice before the Patent and Trademark Office

○ A sole patentee

○ A joint patentee; I certify that I am authorized to sign this submission on behalf of all the other patentees.

○ A joint patentee; all of whom are signing this e-petition

○ The assignee of record of the entire interest

Patent Practitioner			
A signature of the applicant or representative is required in accordance with 37 CFR 1.33 and 10.18. Please see 37 CFR 1.4(d) for the form of the signature			
Signature	/WJS/	Date (YYYY-MM-DD)	2006-12-05
Name	William J. Sapone	Registration Number	32518

This collection of information is required by 37 CFR 1.378(c). The information is required to obtain or retain a benefit by the public which is to file (and by the USPTO to process) an application. Confidentiality is governed by 35 U.S.C. 122 and 37 CFR 1.11 and 1.14. This collection is estimated to take 1 hour to complete, including gathering, preparing, and submitting the completed application form to the USPTO. Time will vary depending upon the individual case. Any comments on the amount of time you require to complete this form and/ or suggestions for reducing this burden, should be sent to the Chief Information Officer, U.S. Patent and Trademark Office, U.S. Department of Commerce, P.O. Box 1450, Alexandria, VA 22313-1450. DO NOT SEND FEES OR COMPLETED FORMS TO THIS ADDRESS. **This form can only be used when in conjunction with EFS-Web. If this form is mailed to the USPTO, it may cause delays in reinstating the patent.**

Privacy Act Statement

The Privacy Act of 1974 (P.L. 93-579) requires that you be given certain information in connection with your submission of the attached form related to a patent application or patent. Accordingly, pursuant to the requirements of the Act, please be advised that: (1) the general authority for the collection of this information is 35 U.S.C. 2(b)(2); (2) furnishing of the information solicited is voluntary; and (3) the principal purpose for which the information is used by the U.S. Patent and Trademark Office is to process and/or examine your submission related to a patent application or patent. If you do not furnish the requested information, the U.S. Patent and Trademark Office may not be able to process and/or examine your submission, which may result in termination of proceedings or abandonment of the application or expiration of the patent.

The information provided by you in this form will be subject to the following routine uses:

1. The information on this form will be treated confidentially to the extent allowed under the Freedom of Information Act (5 U.S.C. 552) and the Privacy Act (5 U.S.C. 552a). Records from this system of records may be disclosed to the Department of Justice to determine whether the Freedom of Information Act requires disclosure of these record s.

2. A record from this system of records may be disclosed, as a routine use, in the course of presenting evidence to a court, magistrate, or administrative tribunal, including disclosures to opposing counsel in the course of settlement negotiations.

3. A record in this system of records may be disclosed, as a routine use, to a Member of Congress submitting a request involving an individual, to whom the record pertains, when the individual has requested assistance from the Member with respect to the subject matter of the record.

4. A record in this system of records may be disclosed, as a routine use, to a contractor of the Agency having need for the information in order to perform a contract. Recipients of information shall be required to comply with the requirements of the Privacy Act of 1974, as amended, pursuant to 5 U.S.C. 552a(m).

5. A record related to an International Application filed under the Patent Cooperation Treaty in this system of records may be disclosed, as a routine use, to the International Bureau of the World Intellectual Property Organization, pursuant to the Patent Cooperation Treaty.

6. A record in this system of records may be disclosed, as a routine use, to another federal agency for purposes of National Security review (35 U.S.C. 181) and for review pursuant to the Atomic Energy Act (42 U.S.C. 218(c)).

7. A record from this system of records may be disclosed, as a routine use, to the Administrator, General Services, or his/her designee, during an inspection of records conducted by GSA as part of that agency's responsibility to recommend improvements in records management practices and programs, under authority of 44 U.S.C. 2904 and 2906. Such disclosure shall be made in accordance with the GSA regulations governing inspection of records for this purpose, and any other relevant (i.e., GSA or Commerce) directive. Such disclosure shall not be used to make determinations about individuals.

8. A record from this system of records may be disclosed, as a routine use, to the public after either publication of the application pursuant to 35 U.S.C. 122(b) or issuance of a patent pursuant to 35 U.S.C. 151. Further, a record may be disclosed, subject to the limitations of 37 CFR 1.14, as a routine use, to the public if the record was filed in an application which became abandoned or in which the proceedings were terminated and which application is referenced by either a published application, an application open to public inspections or an issued patent.

9. A record from this system of records may be disclosed, as a routine use, to a Federal, State, or local law enforcement agency, if the USPTO becomes aware of a violation or potential violation of law or regulation.

Under the Paperwork Reduction Act of 1995, no persons are required to respond to a collection of information unless it displays valid OMB control number.

PETITION TO ACCEPT UNINTENTIONALLY DELAYED PAYMENT OF MAINTENANCE FEE IN AN EXPIRED PATENT (37 CFR 1.378(c))

Patent Number	Issue Date (YYYY-MM-DD)	Application Number	Filing Date (YYYY-MM-DD)	Docket Number (if applicable)
5222621	1993-06-29	07911722	1992-07-10	

CAUTION: Maintenance fee (and surcharge, if any) payment must correctly identify: (1) the patent number and (2) the application number of the actual U.S. application leading to issuance of that patent to ensure the fee(s) is/are associated with the correct patent. 37 CFR 1.366(c) and (d).

SMALL ENTITY
☐ Patentee claims, or has previously claimed, small entity status. See 37 CFR 1.27.

LOSS OF ENTITLEMENT TO SMALL ENTITY STATUS
☒ Patentee is no longer entitled to small entity status. See 37 CFR 1.27(g)

NOT Small Entity		Small Entity	
Fee	Code	Fee	Code
○ 3 ½ year	(1551)	○ 3 ½ year	(2551)
○ 7 ½ year	(1552)	○ 7 ½ year	(2552)
◉ 11 ½ year	(1553)	○ 11 ½ year	(2553)

SURCHARGE
The surcharge required by 37 CFR 1.20(i)(2) (Fee Code 1558) must be paid as a condition of accepting unintentionally delayed payment of the maintenance fee.

MAINTENANCE FEE (37 CFR 1.20(e)-(g))
The appropriate maintenance fee must be submitted with this petition.

STATEMENT
THE UNDERSIGNED CERTIFIES THAT THE DELAY IN PAYMENT OF THE MAINTENANCE FEE TO THIS PATENT WAS UNINTENTIONAL

PETITIONER(S) REQUEST THAT THE DELAYED PAYMENT OF THE MAINTENANCE FEE BE ACCEPTED AND THE PATENT REINSTATED

THIS PORTION MUST BE COMPLETED BY THE SIGNATORY OR SIGNATORIES

37 CFR 1.378(d) states: "Any petition under this section must be signed by an attorney or agent registered to practice before the Patent and Trademark Office, or by the patentee, the assignee, or other party in interest."

I certify, in accordance with 37 CFR 1.4(d)(4) that I am

◉ An attorney or agent registered to practice before the Patent and Trademark Office

○ A sole patentee

○ A joint patentee; I certify that I am authorized to sign this submission on behalf of all the other patentees.

○ A joint patentee; all of whom are signing this e-petition

○ The assignee of record of the entire interest

Patent Practitioner			
A signature of the applicant or representative is required in accordance with 37 CFR 1.33 and 10.18. Please see 37 CFR 1.4(d) for the form of the signature			
Signature	/WJS/	Date (YYYY-MM-DD)	2006-12-05
Name	William J. Sapone	Registration Number	32518

This collection of information is required by 37 CFR 1.378(c). The information is required to obtain or retain a benefit by the public which is to file (and by the USPTO to process) an application. Confidentiality is governed by 35 U.S.C. 122 and 37 CFR 1.11 and 1.14. This collection is estimated to take 1 hour to complete, including gathering, preparing, and submitting the completed application form to the USPTO. Time will vary depending upon the individual case. Any comments on the amount of time you require to complete this form and/ or suggestions for reducing this burden, should be sent to the Chief Information Officer, U.S. Patent and Trademark Office, U.S. Department of Commerce, P.O. Box 1450, Alexandria, VA 22313-1450. DO NOT SEND FEES OR COMPLETED FORMS TO THIS ADDRESS. **This form can only be used when in conjunction with EFS-Web. If this form is mailed to the USPTO, it may cause delays in reinstating the patent.**

Privacy Act Statement

The Privacy Act of 1974 (P.L. 93-579) requires that you be given certain information in connection with your submission of the attached form related to a patent application or patent. Accordingly, pursuant to the requirements of the Act, please be advised that: (1) the general authority for the collection of this information is 35 U.S.C. 2(b)(2); (2) furnishing of the information solicited is voluntary; and (3) the principal purpose for which the information is used by the U.S. Patent and Trademark Office is to process and/or examine your submission related to a patent application or patent. If you do not furnish the requested information, the U.S. Patent and Trademark Office may not be able to process and/or examine your submission, which may result in termination of proceedings or abandonment of the application or expiration of the patent.

The information provided by you in this form will be subject to the following routine uses:

1. The information on this form will be treated confidentially to the extent allowed under the Freedom of Information Act (5 U.S.C. 552) and the Privacy Act (5 U.S.C. 552a). Records from this system of records may be disclosed to the Department of Justice to determine whether the Freedom of Information Act requires disclosure of these record s.

2. A record from this system of records may be disclosed, as a routine use, in the course of presenting evidence to a court, magistrate, or administrative tribunal, including disclosures to opposing counsel in the course of settlement negotiations.

3. A record in this system of records may be disclosed, as a routine use, to a Member of Congress submitting a request involving an individual, to whom the record pertains, when the individual has requested assistance from the Member with respect to the subject matter of the record.

4. A record in this system of records may be disclosed, as a routine use, to a contractor of the Agency having need for the information in order to perform a contract. Recipients of information shall be required to comply with the requirements of the Privacy Act of 1974, as amended, pursuant to 5 U.S.C. 552a(m).

5. A record related to an International Application filed under the Patent Cooperation Treaty in this system of records may be disclosed, as a routine use, to the International Bureau of the World Intellectual Property Organization, pursuant to the Patent Cooperation Treaty.

6. A record in this system of records may be disclosed, as a routine use, to another federal agency for purposes of National Security review (35 U.S.C. 181) and for review pursuant to the Atomic Energy Act (42 U.S.C. 218(c)).

7. A record from this system of records may be disclosed, as a routine use, to the Administrator, General Services, or his/her designee, during an inspection of records conducted by GSA as part of that agency's responsibility to recommend improvements in records management practices and programs, under authority of 44 U.S.C. 2904 and 2906. Such disclosure shall be made in accordance with the GSA regulations governing inspection of records for this purpose, and any other relevant (i.e., GSA or Commerce) directive. Such disclosure shall not be used to make determinations about individuals.

8. A record from this system of records may be disclosed, as a routine use, to the public after either publication of the application pursuant to 35 U.S.C. 122(b) or issuance of a patent pursuant to 35 U.S.C. 151. Further, a record may be disclosed, subject to the limitations of 37 CFR 1.14, as a routine use, to the public if the record was filed in an application which became abandoned or in which the proceedings were terminated and which application is referenced by either a published application, an application open to public inspections or an issued patent.

9. A record from this system of records may be disclosed, as a routine use, to a Federal, State, or local law enforcement agency, if the USPTO becomes aware of a violation or potential violation of law or regulation.

Under the Paperwork Reduction Act of 1995, no persons are required to respond to a collection of information unless it displays valid OMB control number.

PETITION TO ACCEPT UNINTENTIONALLY DELAYED PAYMENT OF MAINTENANCE FEE IN AN EXPIRED PATENT (37 CFR 1.378(c))

Patent Number	Issue Date (YYYY-MM-DD)	Application Number	Filing Date (YYYY-MM-DD)	Docket Number (if applicable)
5222621	1993-06-29	07911722	1992-07-10	

CAUTION: Maintenance fee (and surcharge, if any) payment must correctly identify: (1) the patent number and (2) the application number of the actual U.S. application leading to issuance of that patent to ensure the fee(s) is/are associated with the correct patent. 37 CFR 1.366(c) and (d).

SMALL ENTITY
☐ Patentee claims, or has previously claimed, small entity status. See 37 CFR 1.27.

LOSS OF ENTITLEMENT TO SMALL ENTITY STATUS
☒ Patentee is no longer entitled to small entity status. See 37 CFR 1.27(g)

NOT Small Entity		Small Entity	
Fee	Code	Fee	Code
○ 3 ½ year	(1551)	○ 3 ½ year	(2551)
○ 7 ½ year	(1552)	○ 7 ½ year	(2552)
◉ 11 ½ year	(1553)	○ 11 ½ year	(2553)

SURCHARGE
The surcharge required by 37 CFR 1.20(i)(2) (Fee Code 1558) must be paid as a condition of accepting unintentionally delayed payment of the maintenance fee.

MAINTENANCE FEE (37 CFR 1.20(e)-(g))
The appropriate maintenance fee must be submitted with this petition.

STATEMENT
THE UNDERSIGNED CERTIFIES THAT THE DELAY IN PAYMENT OF THE MAINTENANCE FEE TO THIS PATENT WAS UNINTENTIONAL

PETITIONER(S) REQUEST THAT THE DELAYED PAYMENT OF THE MAINTENANCE FEE BE ACCEPTED AND THE PATENT REINSTATED

THIS PORTION MUST BE COMPLETED BY THE SIGNATORY OR SIGNATORIES

37 CFR 1.378(d) states: "Any petition under this section must be signed by an attorney or agent registered to practice before the Patent and Trademark Office, or by the patentee, the assignee, or other party in interest."

I certify, in accordance with 37 CFR 1.4(d)(4) that I am

◉ An attorney or agent registered to practice before the Patent and Trademark Office

○ A sole patentee

○ A joint patentee; I certify that I am authorized to sign this submission on behalf of all the other patentees.

○ A joint patentee; all of whom are signing this e-petition

○ The assignee of record of the entire interest

Patent Practitioner			
A signature of the applicant or representative is required in accordance with 37 CFR 1.33 and 10.18. Please see 37 CFR 1.4(d) for the form of the signature			
Signature	/WJS/	Date (YYYY-MM-DD)	2006-12-05
Name	William J. Sapone	Registration Number	32518

This collection of information is required by 37 CFR 1.378(c). The information is required to obtain or retain a benefit by the public which is to file (and by the USPTO to process) an application. Confidentiality is governed by 35 U.S.C. 122 and 37 CFR 1.11 and 1.14. This collection is estimated to take 1 hour to complete, including gathering, preparing, and submitting the completed application form to the USPTO. Time will vary depending upon the individual case. Any comments on the amount of time you require to complete this form and/ or suggestions for reducing this burden, should be sent to the Chief Information Officer, U.S. Patent and Trademark Office, U.S. Department of Commerce, P.O. Box 1450, Alexandria, VA 22313-1450. DO NOT SEND FEES OR COMPLETED FORMS TO THIS ADDRESS. **This form can only be used when in conjunction with EFS-Web. If this form is mailed to the USPTO, it may cause delays in reinstating the patent.**

Privacy Act Statement

The Privacy Act of 1974 (P.L. 93-579) requires that you be given certain information in connection with your submission of the attached form related to a patent application or patent. Accordingly, pursuant to the requirements of the Act, please be advised that: (1) the general authority for the collection of this information is 35 U.S.C. 2(b)(2); (2) furnishing of the information solicited is voluntary; and (3) the principal purpose for which the information is used by the U.S. Patent and Trademark Office is to process and/or examine your submission related to a patent application or patent. If you do not furnish the requested information, the U.S. Patent and Trademark Office may not be able to process and/or examine your submission, which may result in termination of proceedings or abandonment of the application or expiration of the patent.

The information provided by you in this form will be subject to the following routine uses:

1. The information on this form will be treated confidentially to the extent allowed under the Freedom of Information Act (5 U.S.C. 552) and the Privacy Act (5 U.S.C. 552a). Records from this system of records may be disclosed to the Department of Justice to determine whether the Freedom of Information Act requires disclosure of these record s.

2. A record from this system of records may be disclosed, as a routine use, in the course of presenting evidence to a court, magistrate, or administrative tribunal, including disclosures to opposing counsel in the course of settlement negotiations.

3. A record in this system of records may be disclosed, as a routine use, to a Member of Congress submitting a request involving an individual, to whom the record pertains, when the individual has requested assistance from the Member with respect to the subject matter of the record.

4. A record in this system of records may be disclosed, as a routine use, to a contractor of the Agency having need for the information in order to perform a contract. Recipients of information shall be required to comply with the requirements of the Privacy Act of 1974, as amended, pursuant to 5 U.S.C. 552a(m).

5. A record related to an International Application filed under the Patent Cooperation Treaty in this system of records may be disclosed, as a routine use, to the International Bureau of the World Intellectual Property Organization, pursuant to the Patent Cooperation Treaty.

6. A record in this system of records may be disclosed, as a routine use, to another federal agency for purposes of National Security review (35 U.S.C. 181) and for review pursuant to the Atomic Energy Act (42 U.S.C. 218(c)).

7. A record from this system of records may be disclosed, as a routine use, to the Administrator, General Services, or his/her designee, during an inspection of records conducted by GSA as part of that agency's responsibility to recommend improvements in records management practices and programs, under authority of 44 U.S.C. 2904 and 2906. Such disclosure shall be made in accordance with the GSA regulations governing inspection of records for this purpose, and any other relevant (i.e., GSA or Commerce) directive. Such disclosure shall not be used to make determinations about individuals.

8. A record from this system of records may be disclosed, as a routine use, to the public after either publication of the application pursuant to 35 U.S.C. 122(b) or issuance of a patent pursuant to 35 U.S.C. 151. Further, a record may be disclosed, subject to the limitations of 37 CFR 1.14, as a routine use, to the public if the record was filed in an application which became abandoned or in which the proceedings were terminated and which application is referenced by either a published application, an application open to public inspections or an issued patent.

9. A record from this system of records may be disclosed, as a routine use, to a Federal, State, or local law enforcement agency, if the USPTO becomes aware of a violation or potential violation of law or regulation.

Under the Paperwork Reduction Act of 1995, no persons are required to respond to a collection of information unless it displays valid OMB control number.

PETITION TO ACCEPT UNINTENTIONALLY DELAYED PAYMENT OF MAINTENANCE FEE IN AN EXPIRED PATENT (37 CFR 1.378(c))

Patent Number	Issue Date (YYYY-MM-DD)	Application Number	Filing Date (YYYY-MM-DD)	Docket Number (if applicable)
5,259,555	1993-11-09	07/919,451	1992-07-27	CW-101US

CAUTION: Maintenance fee (and surcharge, if any) payment must correctly identify: (1) the patent number and (2) the application number of the actual U.S. application leading to issuance of that patent to ensure the fee(s) is/are associated with the correct patent. 37 CFR 1.366(c) and (d).

SMALL ENTITY
☒ Patentee claims, or has previously claimed, small entity status. See 37 CFR 1.27.

LOSS OF ENTITLEMENT TO SMALL ENTITY STATUS
☐ Patentee is no longer entitled to small entity status. See 37 CFR 1.27(g)

NOT Small Entity			Small Entity		
	Fee	Code		Fee	Code
○	3 ½ year	(1551)	○	3 ½ year	(2551)
○	7 ½ year	(1552)	○	7 ½ year	(2552)
○	11 ½ year	(1553)	◉	11 ½ year	(2553)

SURCHARGE
The surcharge required by 37 CFR 1.20(i)(2) (Fee Code 1558) must be paid as a condition of accepting unintentionally delayed payment of the maintenance fee.

MAINTENANCE FEE (37 CFR 1.20(e)-(g))
The appropriate maintenance fee must be submitted with this petition.

STATEMENT
THE UNDERSIGNED CERTIFIES THAT THE DELAY IN PAYMENT OF THE MAINTENANCE FEE TO THIS PATENT WAS UNINTENTIONAL

PETITIONER(S) REQUEST THAT THE DELAYED PAYMENT OF THE MAINTENANCE FEE BE ACCEPTED AND THE PATENT REINSTATED

THIS PORTION MUST BE COMPLETED BY THE SIGNATORY OR SIGNATORIES

37 CFR 1.378(d) states: "Any petition under this section must be signed by an attorney or agent registered to practice before the Patent and Trademark Office, or by the patentee, the assignee, or other party in interest."

I certify, in accordance with 37 CFR 1.4(d)(4) that I am

◉ An attorney or agent registered to practice before the Patent and Trademark Office

○ A sole patentee

○ A joint patentee; I certify that I am authorized to sign this submission on behalf of all the other patentees.

○ A joint patentee; all of whom are signing this e-petition

○ The assignee of record of the entire interest

Patent Practitioner			
A signature of the applicant or representative is required in accordance with 37 CFR 1.33 and 10.18. Please see 37 CFR 1.4(d) for the form of the signature			
Signature	/Peter N. Jansson/	Date (YYYY-MM-DD)	2007-11-06
Name	Peter N. Jansson	Registration Number	26185

This collection of information is required by 37 CFR 1.378(c). The information is required to obtain or retain a benefit by the public which is to file (and by the USPTO to process) an application. Confidentiality is governed by 35 U.S.C. 122 and 37 CFR 1.11 and 1.14. This collection is estimated to take 1 hour to complete, including gathering, preparing, and submitting the completed application form to the USPTO. Time will vary depending upon the individual case. Any comments on the amount of time you require to complete this form and/ or suggestions for reducing this burden, should be sent to the Chief Information Officer, U.S. Patent and Trademark Office, U.S. Department of Commerce, P.O. Box 1450, Alexandria, VA 22313-1450. DO NOT SEND FEES OR COMPLETED FORMS TO THIS ADDRESS. **This form can only be used when in conjunction with EFS-Web. If this form is mailed to the USPTO, it may cause delays in reinstating the patent.**

Privacy Act Statement

The Privacy Act of 1974 (P.L. 93-579) requires that you be given certain information in connection with your submission of the attached form related to a patent application or patent. Accordingly, pursuant to the requirements of the Act, please be advised that: (1) the general authority for the collection of this information is 35 U.S.C. 2(b)(2); (2) furnishing of the information solicited is voluntary; and (3) the principal purpose for which the information is used by the U.S. Patent and Trademark Office is to process and/or examine your submission related to a patent application or patent. If you do not furnish the requested information, the U.S. Patent and Trademark Office may not be able to process and/or examine your submission, which may result in termination of proceedings or abandonment of the application or expiration of the patent.

The information provided by you in this form will be subject to the following routine uses:

1. The information on this form will be treated confidentially to the extent allowed under the Freedom of Information Act (5 U.S.C. 552) and the Privacy Act (5 U.S.C. 552a). Records from this system of records may be disclosed to the Department of Justice to determine whether the Freedom of Information Act requires disclosure of these record s.

2. A record from this system of records may be disclosed, as a routine use, in the course of presenting evidence to a court, magistrate, or administrative tribunal, including disclosures to opposing counsel in the course of settlement negotiations.

3. A record in this system of records may be disclosed, as a routine use, to a Member of Congress submitting a request involving an individual, to whom the record pertains, when the individual has requested assistance from the Member with respect to the subject matter of the record.

4. A record in this system of records may be disclosed, as a routine use, to a contractor of the Agency having need for the information in order to perform a contract. Recipients of information shall be required to comply with the requirements of the Privacy Act of 1974, as amended, pursuant to 5 U.S.C. 552a(m).

5. A record related to an International Application filed under the Patent Cooperation Treaty in this system of records may be disclosed, as a routine use, to the International Bureau of the World Intellectual Property Organization, pursuant to the Patent Cooperation Treaty.

6. A record in this system of records may be disclosed, as a routine use, to another federal agency for purposes of National Security review (35 U.S.C. 181) and for review pursuant to the Atomic Energy Act (42 U.S.C. 218(c)).

7. A record from this system of records may be disclosed, as a routine use, to the Administrator, General Services, or his/her designee, during an inspection of records conducted by GSA as part of that agency's responsibility to recommend improvements in records management practices and programs, under authority of 44 U.S.C. 2904 and 2906. Such disclosure shall be made in accordance with the GSA regulations governing inspection of records for this purpose, and any other relevant (i.e., GSA or Commerce) directive. Such disclosure shall not be used to make determinations about individuals.

8. A record from this system of records may be disclosed, as a routine use, to the public after either publication of the application pursuant to 35 U.S.C. 122(b) or issuance of a patent pursuant to 35 U.S.C. 151. Further, a record may be disclosed, subject to the limitations of 37 CFR 1.14, as a routine use, to the public if the record was filed in an application which became abandoned or in which the proceedings were terminated and which application is referenced by either a published application, an application open to public inspections or an issued patent.

9. A record from this system of records may be disclosed, as a routine use, to a Federal, State, or local law enforcement agency, if the USPTO becomes aware of a violation or potential violation of law or regulation.

UNITED STATES PATENT AND TRADEMARK OFFICE

Commissioner for Patents
United States Patent and Trademark Office
P.O. Box 1450
Alexandria, VA 22313-1450
www.uspto.gov

In re Patent No. 5259555
Issue Date: November 9,1993
Application No. 07919451
Filed: July 27,1992
Attorney Docket No. CW-101US

:
:DECISION GRANTING PETITION
:UNDER 37 CFR 1.378(c)
:

This is a decision on the electronic petition, filed November 6,2007 ,under 37 CFR 1.378(c) to accept the unintentionally delayed payment of the 11.5 year maintenance fee for the above-identified patent.

The petition is GRANTED.

The maintenance fee is accepted, and the above-identified patent reinstated as of November 6,2007 . This decision also constitutes notice that the fee has been accepted. An electronic copy of the petition and this decision has been created as an entry in an Image File Wrapper. Nevertheless, petitioner should print and retain an independent copy

Telephone inquires related to this electronic decision should be directed to the Electronic Business Center at 1-866-217-9197.

UNITED STATES PATENT AND TRADEMARK OFFICE

Commissioner for Patents
United States Patent and Trademark Office
P.O. Box 1450
Alexandria, VA 22313-1450
www.uspto.gov

In re Patent No. 5320953
Issue Date: June 14,1994
Application No. 07921090
Filed: July 29,1992
Attorney Docket No. Q-29909

:

:DECISION GRANTING PETITION
:UNDER 37 CFR 1.378(c)

:

This is a decision on the electronic petition, filed October 31,2006 ,under 37 CFR 1.378(c) to accept the unintentionally delayed payment of the 11.5 year maintenance fee for the above-identified patent.

The petition is GRANTED.

The maintenance fee is accepted, and the above-identified patent reinstated as of October 31,2006 . This decision also constitutes notice that the fee has been accepted. An electronic copy of the petition and this decision has been created as an entry in an Image File Wrapper. Nevertheless, petitioner should print and retain an independent copy

Telephone inquires related to this electronic decision should be directed to the Electronic Business Center at 1-866-217-9197.

Under the Paperwork Reduction Act of 1995, no persons are required to respond to a collection of information unless it displays valid OMB control number.

PETITION TO ACCEPT UNINTENTIONALLY DELAYED PAYMENT OF MAINTENANCE FEE IN AN EXPIRED PATENT (37 CFR 1.378(c))

Patent Number	Issue Date (YYYY-MM-DD)	Application Number	Filing Date (YYYY-MM-DD)	Docket Number (if applicable)
5320953	1994-06-14	07921090	1992-07-29	Q29909

CAUTION: Maintenance fee (and surcharge, if any) payment must correctly identify: (1) the patent number and (2) the application number of the actual U.S. application leading to issuance of that patent to ensure the fee(s) is/are associated with the correct patent. 37 CFR 1.366(c) and (d).

SMALL ENTITY
☐ Patentee claims, or has previously claimed, small entity status. See 37 CFR 1.27.

LOSS OF ENTITLEMENT TO SMALL ENTITY STATUS
☐ Patentee is no longer entitled to small entity status. See 37 CFR 1.27(g)

NOT Small Entity			Small Entity		
	Fee	Code		Fee	Code
○	3 ½ year	(1551)	○	3 ½ year	(2551)
○	7 ½ year	(1552)	○	7 ½ year	(2552)
◉	11 ½ year	(1553)	○	11 ½ year	(2553)

SURCHARGE
The surcharge required by 37 CFR 1.20(i)(2) (Fee Code 1558) must be paid as a condition of accepting unintentionally delayed payment of the maintenance fee.

MAINTENANCE FEE (37 CFR 1.20(e)-(g))
The appropriate maintenance fee must be submitted with this petition.

STATEMENT
THE UNDERSIGNED CERTIFIES THAT THE DELAY IN PAYMENT OF THE MAINTENANCE FEE TO THIS PATENT WAS UNINTENTIONAL

PETITIONER(S) REQUEST THAT THE DELAYED PAYMENT OF THE MAINTENANCE FEE BE ACCEPTED AND THE PATENT REINSTATED

THIS PORTION MUST BE COMPLETED BY THE SIGNATORY OR SIGNATORIES

37 CFR 1.378(d) states: "Any petition under this section must be signed by an attorney or agent registered to practice before the Patent and Trademark Office, or by the patentee, the assignee, or other party in interest."

I certify, in accordance with 37 CFR 1.4(d)(4) that I am

◉ An attorney or agent registered to practice before the Patent and Trademark Office

○ A sole patentee

○ A joint patentee; I certify that I am authorized to sign this submission on behalf of all the other patentees.

○ A joint patentee; all of whom are signing this e-petition

○ The assignee of record of the entire interest

Patent Practitioner			
A signature of the applicant or representative is required in accordance with 37 CFR 1.33 and 10.18. Please see 37 CFR 1.4(d) for the form of the signature			
Signature	/David J. Cushing/	Date (YYYY-MM-DD)	2006-10-31
Name	David J. Cushing	Registration Number	28703

This collection of information is required by 37 CFR 1.378(c). The information is required to obtain or retain a benefit by the public which is to file (and by the USPTO to process) an application. Confidentiality is governed by 35 U.S.C. 122 and 37 CFR 1.11 and 1.14. This collection is estimated to take 1 hour to complete, including gathering, preparing, and submitting the completed application form to the USPTO. Time will vary depending upon the individual case. Any comments on the amount of time you require to complete this form and/ or suggestions for reducing this burden, should be sent to the Chief Information Officer, U.S. Patent and Trademark Office, U.S. Department of Commerce, P.O. Box 1450, Alexandria, VA 22313-1450. DO NOT SEND FEES OR COMPLETED FORMS TO THIS ADDRESS. **This form can only be used when in conjunction with EFS-Web. If this form is mailed to the USPTO, it may cause delays in reinstating the patent.**

Privacy Act Statement

The Privacy Act of 1974 (P.L. 93-579) requires that you be given certain information in connection with your submission of the attached form related to a patent application or patent. Accordingly, pursuant to the requirements of the Act, please be advised that: (1) the general authority for the collection of this information is 35 U.S.C. 2(b)(2); (2) furnishing of the information solicited is voluntary; and (3) the principal purpose for which the information is used by the U.S. Patent and Trademark Office is to process and/or examine your submission related to a patent application or patent. If you do not furnish the requested information, the U.S. Patent and Trademark Office may not be able to process and/or examine your submission, which may result in termination of proceedings or abandonment of the application or expiration of the patent.

The information provided by you in this form will be subject to the following routine uses:

1. The information on this form will be treated confidentially to the extent allowed under the Freedom of Information Act (5 U.S.C. 552) and the Privacy Act (5 U.S.C. 552a). Records from this system of records may be disclosed to the Department of Justice to determine whether the Freedom of Information Act requires disclosure of these record s.

2. A record from this system of records may be disclosed, as a routine use, in the course of presenting evidence to a court, magistrate, or administrative tribunal, including disclosures to opposing counsel in the course of settlement negotiations.

3. A record in this system of records may be disclosed, as a routine use, to a Member of Congress submitting a request involving an individual, to whom the record pertains, when the individual has requested assistance from the Member with respect to the subject matter of the record.

4. A record in this system of records may be disclosed, as a routine use, to a contractor of the Agency having need for the information in order to perform a contract. Recipients of information shall be required to comply with the requirements of the Privacy Act of 1974, as amended, pursuant to 5 U.S.C. 552a(m).

5. A record related to an International Application filed under the Patent Cooperation Treaty in this system of records may be disclosed, as a routine use, to the International Bureau of the World Intellectual Property Organization, pursuant to the Patent Cooperation Treaty.

6. A record in this system of records may be disclosed, as a routine use, to another federal agency for purposes of National Security review (35 U.S.C. 181) and for review pursuant to the Atomic Energy Act (42 U.S.C. 218(c)).

7. A record from this system of records may be disclosed, as a routine use, to the Administrator, General Services, or his/her designee, during an inspection of records conducted by GSA as part of that agency's responsibility to recommend improvements in records management practices and programs, under authority of 44 U.S.C. 2904 and 2906. Such disclosure shall be made in accordance with the GSA regulations governing inspection of records for this purpose, and any other relevant (i.e., GSA or Commerce) directive. Such disclosure shall not be used to make determinations about individuals.

8. A record from this system of records may be disclosed, as a routine use, to the public after either publication of the application pursuant to 35 U.S.C. 122(b) or issuance of a patent pursuant to 35 U.S.C. 151. Further, a record may be disclosed, subject to the limitations of 37 CFR 1.14, as a routine use, to the public if the record was filed in an application which became abandoned or in which the proceedings were terminated and which application is referenced by either a published application, an application open to public inspections or an issued patent.

9. A record from this system of records may be disclosed, as a routine use, to a Federal, State, or local law enforcement agency, if the USPTO becomes aware of a violation or potential violation of law or regulation.

Under the Paperwork Reduction Act of 1995, no persons are required to respond to a collection of information unless it displays valid OMB control number.

PETITION TO ACCEPT UNINTENTIONALLY DELAYED PAYMENT OF MAINTENANCE FEE IN AN EXPIRED PATENT (37 CFR 1.378(c))

Patent Number	Issue Date (YYYY-MM-DD)	Application Number	Filing Date (YYYY-MM-DD)	Docket Number (if applicable)
5309699	1994-05-10	07922239	1992-07-31	3191J-000016/US

CAUTION: Maintenance fee (and surcharge, if any) payment must correctly identify: (1) the patent number and (2) the application number of the actual U.S. application leading to issuance of that patent to ensure the fee(s) is/are associated with the correct patent. 37 CFR 1.366(c) and (d).

SMALL ENTITY

☐ Patentee claims, or has previously claimed, small entity status. See 37 CFR 1.27.

LOSS OF ENTITLEMENT TO SMALL ENTITY STATUS

☐ Patentee is no longer entitled to small entity status. See 37 CFR 1.27(g)

NOT Small Entity			Small Entity		
	Fee	Code		Fee	Code
○	3 ½ year	(1551)	○	3 ½ year	(2551)
○	7 ½ year	(1552)	○	7 ½ year	(2552)
◉	11 ½ year	(1553)	○	11 ½ year	(2553)

SURCHARGE

The surcharge required by 37 CFR 1.20(i)(2) (Fee Code 1558) must be paid as a condition of accepting unintentionally delayed payment of the maintenance fee.

MAINTENANCE FEE (37 CFR 1.20(e)-(g))

The appropriate maintenance fee must be submitted with this petition.

STATEMENT

THE UNDERSIGNED CERTIFIES THAT THE DELAY IN PAYMENT OF THE MAINTENANCE FEE TO THIS PATENT WAS UNINTENTIONAL

PETITIONER(S) REQUEST THAT THE DELAYED PAYMENT OF THE MAINTENANCE FEE BE ACCEPTED AND THE PATENT REINSTATED

THIS PORTION MUST BE COMPLETED BY THE SIGNATORY OR SIGNATORIES

37 CFR 1.378(d) states: "Any petition under this section must be signed by an attorney or agent registered to practice before the Patent and Trademark Office, or by the patentee, the assignee, or other party in interest."

I certify, in accordance with 37 CFR 1.4(d)(4) that I am

◉ An attorney or agent registered to practice before the Patent and Trademark Office

○ A sole patentee

○ A joint patentee; I certify that I am authorized to sign this submission on behalf of all the other patentees.

○ A joint patentee; all of whom are signing this e-petition

○ The assignee of record of the entire interest

Patent Practitioner			
A signature of the applicant or representative is required in accordance with 37 CFR 1.33 and 10.18. Please see 37 CFR 1.4(d) for the form of the signature			
Signature	/Joseph M. Lafata/	Date (YYYY-MM-DD)	2008-05-07
Name	Joseph M. Lafata	Registration Number	37166

This collection of information is required by 37 CFR 1.378(c). The information is required to obtain or retain a benefit by the public which is to file (and by the USPTO to process) an application. Confidentiality is governed by 35 U.S.C. 122 and 37 CFR 1.11 and 1.14. This collection is estimated to take 1 hour to complete, including gathering, preparing, and submitting the completed application form to the USPTO. Time will vary depending upon the individual case. Any comments on the amount of time you require to complete this form and/ or suggestions for reducing this burden, should be sent to the Chief Information Officer, U.S. Patent and Trademark Office, U.S. Department of Commerce, P.O. Box 1450, Alexandria, VA 22313-1450. DO NOT SEND FEES OR COMPLETED FORMS TO THIS ADDRESS. **This form can only be used when in conjunction with EFS-Web. If this form is mailed to the USPTO, it may cause delays in reinstating the patent.**

Privacy Act Statement

The Privacy Act of 1974 (P.L. 93-579) requires that you be given certain information in connection with your submission of the attached form related to a patent application or patent. Accordingly, pursuant to the requirements of the Act, please be advised that: (1) the general authority for the collection of this information is 35 U.S.C. 2(b)(2); (2) furnishing of the information solicited is voluntary; and (3) the principal purpose for which the information is used by the U.S. Patent and Trademark Office is to process and/or examine your submission related to a patent application or patent. If you do not furnish the requested information, the U.S. Patent and Trademark Office may not be able to process and/or examine your submission, which may result in termination of proceedings or abandonment of the application or expiration of the patent.

The information provided by you in this form will be subject to the following routine uses:

1. The information on this form will be treated confidentially to the extent allowed under the Freedom of Information Act (5 U.S.C. 552) and the Privacy Act (5 U.S.C. 552a). Records from this system of records may be disclosed to the Department of Justice to determine whether the Freedom of Information Act requires disclosure of these record s.

2. A record from this system of records may be disclosed, as a routine use, in the course of presenting evidence to a court, magistrate, or administrative tribunal, including disclosures to opposing counsel in the course of settlement negotiations.

3. A record in this system of records may be disclosed, as a routine use, to a Member of Congress submitting a request involving an individual, to whom the record pertains, when the individual has requested assistance from the Member with respect to the subject matter of the record.

4. A record in this system of records may be disclosed, as a routine use, to a contractor of the Agency having need for the information in order to perform a contract. Recipients of information shall be required to comply with the requirements of the Privacy Act of 1974, as amended, pursuant to 5 U.S.C. 552a(m).

5. A record related to an International Application filed under the Patent Cooperation Treaty in this system of records may be disclosed, as a routine use, to the International Bureau of the World Intellectual Property Organization, pursuant to the Patent Cooperation Treaty.

6. A record in this system of records may be disclosed, as a routine use, to another federal agency for purposes of National Security review (35 U.S.C. 181) and for review pursuant to the Atomic Energy Act (42 U.S.C. 218(c)).

7. A record from this system of records may be disclosed, as a routine use, to the Administrator, General Services, or his/her designee, during an inspection of records conducted by GSA as part of that agency's responsibility to recommend improvements in records management practices and programs, under authority of 44 U.S.C. 2904 and 2906. Such disclosure shall be made in accordance with the GSA regulations governing inspection of records for this purpose, and any other relevant (i.e., GSA or Commerce) directive. Such disclosure shall not be used to make determinations about individuals.

8. A record from this system of records may be disclosed, as a routine use, to the public after either publication of the application pursuant to 35 U.S.C. 122(b) or issuance of a patent pursuant to 35 U.S.C. 151. Further, a record may be disclosed, subject to the limitations of 37 CFR 1.14, as a routine use, to the public if the record was filed in an application which became abandoned or in which the proceedings were terminated and which application is referenced by either a published application, an application open to public inspections or an issued patent.

9. A record from this system of records may be disclosed, as a routine use, to a Federal, State, or local law enforcement agency, if the USPTO becomes aware of a violation or potential violation of law or regulation.

UNITED STATES PATENT AND TRADEMARK OFFICE

Commissioner for Patents
United States Patent and Trademark Office
P.O. Box 1450
Alexandria, VA 22313-1450
www.uspto.gov

In re Patent No. 5309699
Issue Date: May 10,1994
Application No. 07922239
Filed: July 31,1992
Attorney Docket No. 3191J-000016/US

:
:DECISION GRANTING PETITION
:UNDER 37 CFR 1.378(c)
:

This is a decision on the electronic petition, filed May 7,2008 ,under 37 CFR 1.378(c) to accept the unintentionally delayed payment of the 11.5 year maintenance fee for the above-identified patent.

The petition is GRANTED.

The maintenance fee is accepted, and the above-identified patent reinstated as of May 7,2008 . This decision also constitutes notice that the fee has been accepted. An electronic copy of the petition and this decision has been created as an entry in an Image File Wrapper. Nevertheless, petitioner should print and retain an independent copy

Telephone inquires related to this electronic decision should be directed to the Electronic Business Center at 1-866-217-9197.

SPE RESPONSE FOR CERTIFICATE OF CORRECTION

Paper No.: _____

DATE : 1/26/07

TO SPE OF : ART UNIT 1638

SUBJECT : Request for Certificate of Correction on Patent No.: 5316931

A response is requested with respect to the accompanying request for a certificate of correction.

Please complete this form and return with file, within **7** days to:
Palm location **7580, Certificates of Correction Branch – South Tower – 9A22**
If response is for an IFW, **return to employee (named below) via PUBSCofC Team in MADRAS.**
With respect to the change(s) requested, correcting Office and/or Applicant's errors, should the patent read as shown in the certificate of correction (COCIN)? No new matter should be introduced, nor should the scope or meaning of the claims be changed.

Lamonte M. Newsome

Thank You For Your Assistance

Certificates of Correction Branch
Tel. No. 703-305-8309

The request for issuing the above-identified correction(s) is hereby:
Note your decision on the appropriate box.

- ☒ **Approved** — **All** changes apply.
- ☐ **Approved in Part** — Specify below which changes **do not** apply.
- ☐ **Denied** — State the reasons for denial below.

Comments:

_____

_____

_____

_____

_____

SPE — **Art Unit** 1638

UNITED STATES PATENT AND TRADEMARK OFFICE

COMMISSIONER FOR PATENTS
UNITED STATES PATENT AND TRADEMARK OFFICE
P.O. BOX 1450
ALEXANDRIA, VA 22313-1450
www.uspto.gov

BENNET LANGLOTZ
P O BOX 759
GENOA, NV 89411

COPY MAILED

JAN 1 1 2007

OFFICE OF PETITIONS

In re Patent No. 5,328,575 :
Issue Date: July 12, 1994 :
Application No. 07/926,227 : ON PETITION
Filed: August 6, 1992 :
Patentee: Allen R. Geiger :

This is a decision in response to a petition, filed July 24, 2006, under 37 CFR 1.378(c) to accept the unintentionally delayed payment of a maintenance fee for the above-identified patent.

The patent issued July 12, 1994. The grace period for paying the 11 ½ year maintenance fee expired on July 12, 2006. Since this petition was filed within the period provided in 37 CFR 1.362(e), the proper surcharge for reinstatement is $1,640. Therefore the additional $65 surcharge is being refunded to Counsel's deposit account.

It is not apparent whether the person signing the statement of unintentional delay was in a position to have firsthand or direct knowledge of the facts and circumstances of the delay at issue. Nevertheless, such statement is being treated as having been made as the result of a reasonable inquiry into the facts and circumstances of such delay. In the event that such an inquiry has not been made, petitioner must make such an inquiry. If such inquiry results in the discovery that the delay in paying the maintenance fee under 37 CFR 1.378(c) was intentional, petitioner must notify the Office.

Further, there is no indication that the person signing the petition was ever given a power of attorney or authorization of agent to prosecute the above-identified patent. However, in accordance with 37 CFR 1.34(a), the signature of Bennet Langlotz appearing on the petition shall constitute a representation to the United States Patent and Trademark Office that he is authorized to represent the particular party on whose behalf he acts.

The petition is GRANTED.

The 11 ½ year maintenance fee in this case is hereby accepted and the above-identified patent is reinstated as of the mail date of this decision.

The file is being forwarded to the Files Repository.

Telephone inquiries concerning this matter may be directed to the undersigned at (571) 272-3204.

Sherry D. Brinkley
Petitions Examiner
Office of Petitions

UNITED STATES DEPARTMENT OF COMMERCE
Patent and Trademark Office
ASSISTANT SECRETARY AND COMMISSIONER OF
PATENTS AND TRADEMARKS
Washington, D.C. 20231

JJGJr.03-00

Paper No 19

ROBERT NISBETT
P.O. BOX 10016
LONGVIEW, TX 75608

COPY MAILED

MAR 0 2 2000

SPECIAL PROGRAMS OFFICE
DAC FOR PATENTS

In re Patent No. 5,271,638
Issue Date: 31 December, 1993
Application No. 07/930,997
Filed: 17 August, 1992
Attorney Docket No. 9606

ON PETITION

This is a decision on the renewed a petition filed 12 February, 1999 under 37 C.F.R. §1.378(b)[1] to accept the unavoidably delayed payment of a maintenance fee for the above-identified patent.

The Office regrets the delay in addressing this matter.

The petition is **DISMISSED**.

Your request for reconsideration of this decision must be submitted within TWO (2) MONTHS from the mail date of this decision. Extensions of time under 37 C.F.R. §1.378(e) are permitted. The reconsideration request should include a cover letter entitled "Renewed Petition under 37 C.F.R. §1.378." Thereafter, no further consideration will be given to a petition under 37 C.F.R. §1.378(b).

---

[1] The regulations at 37 C.F.R. §1.378 provide in pertinent part:

* * *

(a) The Commissioner may accept the payment of any maintenance fee due on a patent after expiration of the patent if, upon petition, the delay in the payment of the maintenance fee is shown to the satisfaction of the Commissioner to have been unavoidable (paragraph (b) of this section) or unintentional (paragraph (c) of this section) and if the surcharge required by §1.20(i) is paid as a condition of accepting payment of the maintenance fee. If the Commissioner accepts payment of the maintenance fee upon petition, the patent shall be considered as not having expired, but will be subject to the conditions set forth in 35 U.S.C. 41(c)(2).

(b) Any petition to accept an unavoidably delayed payment of a maintenance fee filed under paragraph (a) of this section must include:

(1) The required maintenance fee set forth in §1.20(e) through (g) ;
(2) The surcharge set forth in §1.20(i)(1); and
(3) A showing that the delay was unavoidable since reasonable care was taken to ensure that the maintenance fee would be paid timely and that the petition was filed promptly after the patentee was notified of, or otherwise became aware of, the expiration of the patent. The showing must enumerate the steps taken to ensure timely payment of the maintenance fee, the date and the manner in which patentee became aware of the expiration of the patent, and the steps taken to file the petition promptly.

(c) Any petition to accept an unintentionally delayed payment of a maintenance fee filed under paragraph (a) of this section must be filed within twenty-four months after the six-month grace period provided in §1.362(e) and must include:

(1) The required maintenance fee set forth in §1.20(e) through (g) ;
(2) The surcharge set forth in §1.20(i)(1); and
(3) A statement that the delay in payment of the maintenance fee was unintentional. (Emphasis added.)

* * *

The patent issued on 21 December, 1993. The grace period for paying the first maintenance fee expired at midnight on 21 December, 1997. The original petition was filed herein on 12 May and dismissed 7 December, 1998.

The Commissioner may accept late payment of the maintenance fee if the delay is shown to the satisfaction of the Commissioner to have been unavoidable or unintentional. However, the showing of record at present is inadequate to establish unavoidable or unintentional delay within the meaning of 35 U.S.C. §133 and §41(c)(1), respectively and 37 C.F.R. §1.378(b) and (c), respectively.

It is important to note that Petitioner's filing did not include an adequate showing that the delay in payment of the maintenance fee was unavoidable.

STATUTES AND REGULATIONS

Under the applicable provisions of 35 U.S.C. §133 and §41(b) and (c):

- the Commissioner shall charge fees for maintaining in force all patents filed on or after 12 December, 1980, at the 3-year-6-month, 7-year-6-month, and 11-year-6-month intervals; and

- unless payment of the applicable maintenance fee is received in the PTO on or before the date the fee is due or within a grace period of six months thereafter when the grace-period surcharge is paid with maintenance fee, the patent will expire as of the end of the grace period; except that

- the Commissioner may accept the payment of any maintenance fee required by the statute if the payment is made:

  --within 24 months after the six-month grace period if the delay is shown to the satisfaction of the Commissioner to have been unintentional; or

  --at any time after the six-month grace period if the delay is shown to the satisfaction of the Commissioner to have been unavoidable.

Unavoidable Delay

To have the third maintenance fee accepted as unavoidably delayed, Petitioner must:

- make a showing sufficient under 37 C.F.R. §1.378(b) adequate to demonstrate the basis for a claim of unavoidable delay, since reasonable care was taken to ensure that the maintenance fee would be paid timely (details discussed below);
- pay the maintenance fee due (already paid); and
- pay the surcharge after expiration for unavoidable delay.

Petitioner must be aware that, while the surcharge (fee) is smaller for petition alleging unavoidable delay, the "showing" requirement under this portion of the regulation is quite substantial.

A late maintenance fee is considered under the same standard as that for reviving an abandoned application under 35 U.S.C. 133 because 35 U.S.C. 41(c)(1) uses the identical language, *i.e.*, "unavoidable" delay.[2]

In determining if a delay was unavoidable, decisions on reviving abandoned applications have adopted the standard of the reasonably prudent persons acting in their most important business matters.[3] In addition, decisions on revival are made on a "case-by-case basis, taking all the facts and circumstances into account."[4]

Finally, a petition to revive an application or patent as unavoidably abandoned or expired cannot be granted where a petitioner has failed to meet his or her burden of establishing the cause of the unavoidable delay.[5]

The regulations at 37 C.F.R. §1.378(b)(3) require a showing that:

- the delay was unavoidable since reasonable care was taken to ensure that the

---

[2] Ray v. Lehman, 55 F3d 606, 608-09, 34 USPQ2d 1786, 1787 (Fed. Cir. 1995)(quoting In re Patent No. 4,409,763, 7 USPQ2d 1798, 1800 (Comm'r Pat. 1988)).

[3] Ex parte Pratt, 1887 Dec. Comm'r Pat. 31, 32-33 (Comm'r Pat. 1887) (the term "unavoidable" "is applicable to ordinary human affairs, and requires no more or greater care or diligence than is generally used and observed by prudent and careful men in relation to their most important business"); In re Mattullath, 38 App. D.C. 497, 514-15 (D.C. Cir. 1912); Ex parte Henrich, 1913 Dec. Comm'r Pat. 139, 141 (Comm'r Pat. 1913).

[4] Smith v. Mossinghoff, 671 F.2d 533, 538, 213 USPQ 977, 982 (D.C. Cir. 1982).

[5] Haines v. Quigg, 673 F. Supp. 314, 5 USPQ2d 1130 (N.D. Ind. 1987).

maintenance fee would be paid timely, and

- the showing must enumerate the steps taken to ensure timely payment of the maintenance fee as well as the reasons why payment was not timely made.

This showing should include, but is not limited to, docket records, tickler reports, and file jacket entries for this application, and documents regarding the alleged cause of the delay and copies of any documents referred to in petitioner's statement as to the cause of the unavoidable delay are required.

All the causes which contributed to the failure to timely pay the maintenance fee must be presented and supported with appropriate evidence. It is not sufficient to indicate that Petitioner was unaware or forgot that the maintenance fee was due.

If the cause of the unavoidable delay includes financial hardship, then a complete showing is required of patentee's financial condition--from the earliest that the second maintenance fee could have been paid (21 December, 1996), through the date on which a grantable petition is filed--including all income, expenses, assets, credit, and obligations, which made the delay in payment of the maintenance fee unavoidable. (E.g., Monthly bank statements, annual IRS filings.)

The showing must also enumerate the date and the manner in which patentee became aware of the expiration of the patent, and the steps taken to file the petition promptly. The showing can be verified by using the attached petition form which includes a declaration according to 37 C.F.R. §l.68. Statements from all persons who contributed to the delay are also required. Further, petitioner should identify the party(ies) responsible for making the payment. (See: NOTE, below.)

If the Petitioner is unable to show that the delay was unavoidable, alternatively and as previously noted, the Petitioner may make a showing that the delay was unintentional under 37 C.F.R. §1.378(c). (See Fn. 1, and discussion below.)

Unintentional Delay

While the burden is less onerous to show unintentional delay under the provisions of 37 C.F.R. §1.378(c), the application of that portion of the regulation is limited to those cases in which the 24-month time limitation is satisfied. In the instant case that requirement could be met on the date of filing of the original petition herein. Moreover, while the surcharge (fee) is substantially larger, there is no "showing" requirement and Petitioner need only state that the delay was unintentional.

To have the third maintenance fee accepted as unintentionally delayed, Petitioner must:

- submit a petition under 37 C.F.R. §1.378(c)--forms available at the Office website, www.uspto.gov (see Printable Forms);
- pay the maintenance fee due (already submitted); and
- pay the surcharge after expiration for unintentional delay.

Petitioner may also find a current fee schedule at www.uspto.gov

Further correspondence with respect to this matter should be addressed as follows:

By mail: Commissioner of Patents and Trademarks
Box DAC
Washington, D.C. 20231

By FAX: (703) 308-6916
Attn: Office of Petitions

By hand: Crystal Plaza Four, Suite CP4-3C23
2201 South Clark Place
Arlington, VA 22202

Telephone inquiries concerning this matter may be directed to Petitions Attorney John J. Gillon, Jr., at (703) 305-9199.

Beverly M. Flanagan for

John J. Gillon, Jr.
Attorney
Office of Petitions
Office of the Deputy Assistant Commissioner for Patent Policy and Projects

Beverly M. Flanagan

Beverly M. Flanagan
Supervisory Petitions Examiner
Office of Petitions
Office of the Deputy Assistant Commissioner for Patent Policy and Projects

UNITED STATES DEPARTMENT OF COMMERCE
Patent and Trademark Office
ASSISTANT SECRETARY AND COMMISSIONER OF
PATENTS AND TRADEMARKS
Washington, D.C. 20231

Paper No. 21

COPY MAILED

JUN 3 0 2000

SPECIAL PROGRAMS OFFICE
DAC FOR PATENTS

ROBERT NISBETT
P.O. Box 10016
Longview, TX 75608

In re Patent No. 5,271,638 :
Issue Date: December 21, 1993 :
Application No. 07/930,997 :
Filed: August 17, 1992 :
Inventor: Donald M. Yale :

DECISION
ON PETITION

This is a decision on the petition filed May 1, 2000 under 37 CFR 1.378(e) requesting reconsideration of a prior decision which refused to accept under § 1.378(b) the delayed payment of a maintenance fee for the above-identified patent.

The request to accept the delayed payment of the maintenance fee is denied.[1]

BACKGROUND

The patent issued December 21, 1993. The first maintenance fee could have been paid during the period from December 23, 1996 through June 23, 1997, or with a surcharge during the period from June 24, 1997 through December 22, 1997. As no payment was timely received, this patent expired at midnight on December 22, 1997.

A first petition to accept late payment of the maintenance fee under 37 CFR § 1.378(b) was filed on May 12, 1998. Petitioner asserted that the delay in payment of the maintenance fee was unavoidable because patentee did not have the financial means to pay the fee at the time it was due.

[1] This may be viewed as a final agency action within the meaning of 5 USC § 704. See MPEP 1002.02.

The petition was dismissed in the decision of December 7, 1998 on the basis that the petition failed to provide a full showing of all of patentee's assets for the period from December 23, 1996 (the first date when the maintenance fee could have been paid) until May 12, 1998 (the date the first petition was filed).

A request for reconsideration of the first decision was filed on February 12, 1999. The request for reconsideration was again dismissed on the basis that it did not provide an adequate showing that patentee's financial condition during the entire period from December 23, 1996 to May 12, 1998 was such that it unavoidable precluded patentee from paying the maintenance fee.

The current renewed petition requesting reconsideration of the previous decisions was filed May 1, 2000, and included a copies of various financial documents relating to patentee's finances.

STATUTE AND REGULATION

35 USC § 41(c)(1) states that:

> The Commissioner may accept the payment of any maintenance fee required by subsection (b) of this section... after the six-month grace period if the delay is shown to the satisfaction of the Commissioner to have been unavoidable.

37 CFR § 1.366(a) states that:

> The patentee may pay maintenance fees and any necessary surcharges, or any person or organization may pay maintenance fees and any necessary surcharges on behalf of a patentee. Authorization by the patentee need not be filed in the Patent and Trademark Office to pay maintenance fees and any necessary surcharges on behalf of the patentee (emphasis added).

37 CFR § 1.378(b)(3) states that any petition to accept delayed payment of a maintenance fee must include:

> A showing that the delay was unavoidable since reasonable care was taken to ensure that the maintenance fee would be paid timely and that the petition was filed promptly after the patentee was notified of, or otherwise became aware of, the expiration of the patent. The showing must enumerate the steps taken to ensure timely payment of the maintenance fee, the date, and the manner in which patentee became aware of the expiration of the patent, and the steps taken to file the petition promptly.

OPINION

A petition to accept delayed payment of a maintenance fee requires a showing under 37 CFR § 1.378(b)(3) that the delay was unavoidable since reasonable care was taken to ensure that the maintenance fee would be paid timely and that the petition was filed promptly after the patentee was notified of, or otherwise became aware of, the expiration of the patent. This petition lacks both a showing of unavoidable delay in timely payment of the maintenance fee and promptly filing the petition.

The Commissioner may accept late payment of the maintenance fee if the delay is shown to the satisfaction of the Commissioner to have been "unavoidable"; 35 USC § 41(c)(1).

A late maintenance fee is considered under the same standard as that for reviving an abandoned application under 35 USC § 133 because 35 USC § 41(c)(1) uses the identical language, *i.e.*, "unavoidable" delay. Ray v. Lehman, 55 F.3d 606, 608-09, 34 USPQ2d 1786, 1787 (Fed. Cir. 1995)(quoting In re Patent No. 4,409,763, 7 USPQ2d 1798, 1800 (Comm'r Pat. 1988)). Decisions on reviving abandoned applications have adopted the reasonably prudent person standard in determining if the delay was unavoidable. Ex parte Pratt, 1887 Dec. Comm'r Pat. 31, 32-33 (Comm'r Pat. 1887)(the term "unavoidable" "is applicable to ordinary human affairs, and requires no more or greater care or diligence than is generally used and observed by prudent and careful men in relation to their most important business"); In re Mattullath, 38 App. D.C. 497, 514-15 (D.C. Cir. 1912); Ex parte Henrich, 1913 Dec. Comm'r Pat. 139, 141 (Comm'r Pat. 1913). In addition, decisions on revival are made on a "case-by-case basis, taking all the facts and circumstances into account." Smith v. Mossinghoff, 671 F.2d 533, 538, 213 USPQ 977, 982 (D.C. Cir. 1982). Finally, a petition to revive an application as unavoidably abandoned cannot be granted where a petitioner has failed to meet his or her burden of establishing the cause of the unavoidable delay. Haines v. Quigg, 673 F. Supp. 314, 5 USPQ2d 1130 (N.D. Ind. 1987).

As 35 U.S.C. § 41(c) requires the payment of fees at specified intervals to maintain a patent in force, rather than some response to a specific action by the Office under 35 U.S.C. § 133, a reasonably prudent person in the exercise of due care and diligence would have taken steps to ensure the timely payment of such maintenance fees. Ray, 55 F.3d at 609, 34 USPQ2d at 1788. That is, an adequate showing that the delay in payment of the maintenance fee at issue was "unavoidable" within the meaning of 35 U.S.C. § 41(c) and 37 CFR 1.378(b)(3) requires a showing of the steps taken to ensure the timely payment of the maintenance fees for this patent. Id.

In determining whether a delay in paying a maintenance fee was unavoidable, one looks to whether the party responsible for payment of the maintenance fee exercised the due care of a reasonably prudent person. Ray, 55 F.3d at 608-609, 34 USPQ2d at 1787. The party whose delay is relevant is the party in interest at the time action is needed to be taken. See Kim v. Quigg, 718 F.Supp. 1280, 1284, 12 USPQ2d 1604, 1607 (E.D. Va. 1989). As patentee was the party in interest when the maintenance fee was payable and due, it was incumbent upon patentee to monitor and track payment of the fee or to engage a third party to undertake that obligation. Moreover, reliance *per se* on a third party for tracking a maintenance fee does not provide a patent holder with a showing of unavoidable delay within the meaning of 37 CFR 1.378(b) and 35 USC 41(c). Rather, such reliance merely shifts the focus of the inquiry from petitioner to whether that third party acted reasonably and prudently.

Petitioner asserts that patentee was fully aware of the need to pay the maintenance fee, but was unavoidably precluded from paying the fee due to financial hardship. Since section 1.378(b) requires a showing both that the failure to timely pay the fee and the delay in filing of a petition were unavoidable, petitioner must provide a documented showing that patentee's financial situation during the entire period from December 23, 1996 to May 12, 1998 was such that he was unavoidably precluded from paying the fee. Petitioner was advised of this requirement in the prior petition decisions.

Evidence of patentee's financial condition is provided in the form of a tax return for the year 1996, a statement that patentee's income was below the level requiring filing of a tax return for 1997, Social Security benefits statements covering the years 1996 and 1997, and a copy of patentee's monthly checking account statements for the period from December, 1995 through December, 1996.

As to the income and tax returns provided, petitioner fails to present any argument or showing that they represent patentee's sole and total income. Patentee stated in his declaration that he also has a business. Petitioner was requested in the prior petition decision of December 7, 1998 to provide a financial showing of patentee's business records. No records have been provided.

Regardless of patentee's income level, income is not the determinative factor herein. While income does have some relevance to patentee's financial condition, the determinative issue is his ability to pay the maintenance fee, which requires a full showing that assets, when compared to critical support liabilities, such as food and shelter, were such that patentee

was precluded from paying the fee. The prior petition decision required a showing of all assets, including any savings accounts, stocks, bonds, property, and business assets held during the period. Petitioner fails to address this requirement.

The only showing provided pertaining to patentee's assets are twelve checking account statements for the months from December, 1995 through December, 1996. These statements cover a time period that is prior to the critical period, i.e. December, 1996 to May, 1998, and thus do not provide a showing of assets at the time the fee or petition were due. Each of the prior petition decisions advised petitioner that full disclosure of patentee's assets and obligations during the period from December 23, 1996 to May 12, 1998 was necessary to support the asserted lack of financial resources for payment of the fee. The most relevant evidence provided by petitioner is the single checking account statement for December, 1996 (the first month the fee could have been paid). That statement shows a balance of $998.57, which would have been sufficient to cover the $510.00 maintenance fee.

Additionally, even if it were assumed *arguendo* that the checking account statement represented patentee's entire assets during the period, and further that other checking statements up to May of 1998 would show similar balances, the showing would still be insufficient to establish that patentee was precluded from paying the fee. Payment of a maintenance fee is an important business responsibility and obligation. It is necessary to show that whatever funds were being expended were of such a nature that they precluded patentee from paying the fee (i.e., that they were essential and necessary support expenditures, such as food, clothing and housing). If patentee was using his assets for non-critical expenditures during the period, then failure to timely pay the fee or submit delayed payment of the fee would not be unavoidable. No showing has been provided to support the assertion that patentee's financial situation was such that he was unavoidably precluded from paying the fee.

A review of PTO records additionally shows that patentee had the financial resources to make the following expenditures to the PTO alone during the critical period from March, 1996 to April, 1998 on other patent applications:

- Payment of an extension of time fee of $190.00 on March 13, 1996 in application serial number 08/164,806.
- Payment of an extension of time fee of $55.00 on June 26, 1996 in application serial number 08/164,806.
- Payment of a filing fee of $375.00 on July 13, 1996 for new patent application serial number 08/675,113.
- Payment of an assignment recordation fee of $40.00 for application serial number 08/675,113 on April 24, 1998.

It is additionally noted that application serial number 08/675,113 was pending during the entire time the maintenance fee and petition were due for this patent, and was prosecuted by counsel of record in this patent. Presumably, counsel was being paid by patentee for his services. Apparently, patentee was knowingly making a business decision to expend resources on other matters not essential to his basic needs. Preoccupation with other matters will not support a finding of unavoidable delay.

CONCLUSION

The prior decision which refused to accept under § 1.378(b) the delayed payment of a maintenance fee for the above-identified patent has been reconsidered. For the above stated reasons, the delay in this case cannot be regarded as unavoidable within the meaning of 35 USC § 41(c)(1) and 37 CFR § 1.378(b) both as to the timely payment of the maintenance fee and the filing of the petition.

The first petition filed May 12, 1998 included payment of $525.00 for the maintenance fee and $700.00 for the surcharge fee. Since this patent will not be reinstated, the maintenance and surcharge fees minus the petition fee, which is not refundable, totaling $1,225.00 are being refunded.

As stated in 37 CFR 1.378(e), no further reconsideration or review of this matter will be undertaken.

Any telephone inquiry regarding this decision should be directed to Robert Garrett at (703) 308-0763, or in his absence, the undersigned at (703) 305-6199.

M. A. Antonakas

Manuel A. Antonakas
Director, Office of Petitions

UNITED STATES PATENT AND TRADEMARK OFFICE

Commissioner for Patents
United States Patent and Trademark Office
P.O. Box 1450
Alexandria, VA 22313-1450
www.uspto.gov

OCT 20 2009

Philip S. Johnson, Esq.
Attention: Hal B. Woodrow
Johnson & Johnson
One Johnson & Johnson Plaza
New Brunswick, NJ 08816
FAX: 732-524-2808

In Re: Patent Term Extension
Application for
U.S. Patent No. 5,254,556

DECISION ON APPLICATIONS FOR PATENT TERM EXTENSION

Ortho-McNeil-Janssen Pharmaceuticals, Inc. ("Applicant"), the owner of record of U.S. Patent No. 5,254,556 ("the '556 patent"), filed an application to extend the term of the '556 patent ("PTE application") under 35 U.S.C. § 156 in the United States Patent and Trademark Office ("USPTO"). Applicant is seeking extension based upon the premarket review under section 505 of the Federal Food Drug and Cosmetic Act of the human drug product known by the tradename Invega Sustenna™. Because the '556 patent is due to expire on October 27, 2009, Applicant has filed two applications for interim extension of the '556 patent, the first under 35 U.S.C. § 156(d)(5) and the second under 35 U.S.C. § 156(e)(2). The application for interim extension under § 156(d)(5) is **DENIED**, but the application for interim extension under § 156(e)(2) is **GRANTED** for a period of one year. To that end, an order granting interim extension under 35 U.S.C. § 156(e)(2) is enclosed extending the term of the '556 patent for a period of one year.

FACTUAL BACKGROUND

1. On October 19, 1993, the USPTO issued the '556 patent to Cornelus G.M. Janssen, Alfonsus G. Knaeps, Ludo E.J. Kennis, and Jan Vandenberk; it was originally assigned to Janssen Pharmaceutica, N.V. and is due to expire on October 27, 2009.
2. On December 19, 2006, the Food and Drug Administration ("FDA") approved New Drug Application ("NDA") No. 21-999, thereby granting permission for the commercial marketing or use of Invega®, which is the brand name for paliperidone.
3. On July 7, 2009, Applicant filed an application for an interim patent term extension in accordance with the provisions of § 156(d)(5) based on the then continuing regulatory review of NDA No. 22-264 for Invega Sustenna™, which is the brand name for paliperidone palmitate, by the FDA.
4. On July 31, 2009, the FDA approved NDA No. 22-264, thereby granting permission for the commercial marketing or use of Invega Sustenna™.
5. On August 6, 2009, Applicant filed a PTE application under § 156 to extend the term of the '556 patent based on the FDA regulatory review period for NDA No. 22-264 of Invega Sustenna™ and an application for an interim patent term extension under § 156(e)(2).

DECISION

I. Interim Extension Under 35 U.S.C. § 156(d)(5) is Denied

Applicant filed an application for an interim patent term extension pursuant to the provisions of § 156(d)(5) on July 7, 2009. Section 156(d)(5) provides for an interim patent term extension of a patent claiming a product subject to regulatory review when the product is subject to on-going pre-market regulatory review by a regulating agency (*e.g.*, FDA). *See* 35 U.S.C. § 156(d)(5). Here, the regulatory review period of the subject product concluded before the term of the '556 patent expired. Thus, the '556 patent is not eligible for an interim patent term extension under section 156(d)(5). Accordingly, the application for an interim extension based on continuing regulatory review by FDA of Invega Sustenna™ (NDA No. 22-264) is denied.

II. Interim Extension Under 35 U.S.C. § 156(e)(2) is Granted

Applicant also filed an application for an interim patent term extension pursuant to the provisions of § 156(e)(2) on August 6, 2009. Section 156(e)(2) provides for an interim patent term extension while an applicant's PTE application is pending before the Office, if the Office determines that a patent is eligible for extension. *See* 35 U.S.C. § 156(e)(2); *see also Somerset Pharms., Inc. v. Dudas*, 500 F.3d 1344, 1346 (Fed. Cir. 2007) (confirming that the Director has no statutory authority to issue an interim extension once he denies a patent term extension application).

Section 156(a) sets forth several eligibility requirements for a patent term extension. *See* 35 U.S.C. § 156(a)(1) – (a)(5), (d)(1) & (e)(1). The sole requirement implicated in this patent term extension application is whether "the permission for the commercial marketing or use of the product . . . [to be] the first permitted commercial marketing or use of the product under the provision of law under which such regulatory review period occurred." 35 U.S.C. § 156(a)(5) (Hereinafter "First Commercial Marketing Provision"). More specifically, whether the '556 patent is eligible for patent term extension turns on whether the approval of Invega Sustenna™ meets the First Commerical Marketing Provision in light of the FDA's prior approval of Invega®. Under the current case law, which the USPTO notes is not settled, the USPTO preliminarily finds that the First Commercial Marketing Provision is met.

Section 156(f) defines the term "product" ultimately to mean "active ingredient . . . including any salt or ester of the active ingredient." *See* 35 U.S.C. § 156(f). In *Photocure v. Dudas*, 622 F. Supp. 338, 347 (E.D. Va. 2008), the district court found that the term "active ingredient" means the ingredient physically present in the drug product upon administration. In reaching this definition, the district court followed *Glaxo Operations UK Ltd. v. Quigg*, 894 F.2d 392 (Fed. Cir. 1990), which it read to set forth a definition of "active ingredient" as used in the section 156(f)(2). *Id.* Under *Photocure*, it appears that the approval of Invega Sustenna™ complies with the requirements of the First Commercial Marketing Provision. Accordingly, the application for an interim extension under § 156(e)(2) is granted for a period of one year.

Although the USPTO presently finds that the '556 patent is eligible for a patent term extension under *Photocure*, the USPTO notes that the *Photocure* decision is currently on appeal to the Federal Circuit. *See Photocure v. Kappos*, Appeal No. 2009-

1393 (argued Sept. 8, 2009). Upon decision from the Federal Circuit, which is expected sometime in early 2010, the USPTO will, if necessary, reconsider its patent term extension eligibility determination in the present case. To that end, it is possible that the USPTO may seek further information from applicant about its initial determination of eligibility depending on the outcome of the Federal Circuit's decision.

CONCLUSION

Applicant's request for an interim extension under 35 U.S.C. § 156(d)(5) is **DENIED**. Applicant's request for interim extension under 35 U.S.C. § 156(e)(2) is **GRANTED** for a period of one year.

Any correspondence with respect to this matter should be addressed as follows:

By mail: Mail Stop Hatch-Waxman PTE
Commissioner for Patents
P.O. Box 1450
Alexandria, VA 22313-1450.

By FAX: (571) 273-7755

Telephone inquiries related to this determination should be directed to Mary C. Till at (571) 272-7755.

Brian E. Hanlon

Brian E. Hanlon
Director
Office of Patent Legal Administration
Office of the Deputy Commissioner
for Patent Examination Policy

cc: Office of Regulatory Policy
Food and Drug Administration
10903 New Hampshire Ave., Bldg. 51, Rm 6222
Silver Spring, MD 20993-0002

Attention: Beverly Friedman

RE: INVEGA SUSTENNA™
FDA Docket No.:

UNITED STATES PATENT AND TRADEMARK OFFICE

In re: Ortho-McNeil-Janssen Pharmaceuticals, Inc.	:	
Request for Patent Term Extension	:	ORDER GRANTING
U.S. Patent No. 5,254,556	:	INTERIM EXTENSION

Ortho-McNeil-Janssen Pharmaceuticals, Inc., the owner of record in the United States Patent and Trademark Office (USPTO) of U.S. Patent No. 5,254,556, filed an application for patent term extension under 35 U.S.C. § 156 on August 6, 2009. The original term of the patent is due to expire on October 27, 2009. The patent claims paliperidone palmitate, labeled as the active ingredient in the human drug product Invega Sustenna™, which was approved by the Food and Drug Administration for commercial marketing or use on July 31, 2009. An extension of 1,449 days is requested.

The initial USPTO review of the application to date indicates that the subject patent is eligible for extension under 35 U.S.C. § 156. Because the original term of the patent would expire before a certificate of patent term extension can be issued or denied, an interim extension of the patent term is appropriate.

An interim extension under 35 U.S.C. § 156(e)(2) of the term of U.S. Patent No. 5,254,556 is granted for a period of one year from the original expiration date of the patent, i.e., until October 27, 2010.

10/7/09
Date

David J. Kappos
Under Secretary of Commerce for Intellectual Property and
Director of the United States Patent and Trademark Office

UNITED STATES PATENT AND TRADEMARK OFFICE

Commissioner for Patents
United States Patent and Trademark Office
P.O. Box 1450
Alexandria, VA 22313-1450
www.uspto.gov

MARSHALL T HILL
460 HILLDALE DR
NEEDMORE PA 17038

COPY MAILED
JUN 0 2 2006
OFFICE OF PETITIONS

In re Patent No. 5,233,779
Issue Date: August 10, 1993 :
Application No. 07/933,825 : DECISION ON PETITION
Filed: August 24, 1992 :
Patentee: Marshall T. Hill :

This is a decision on the petition under 37 CFR 1.378(b), filed May 17, 2006, to accept the unavoidably delayed payment of the maintenance fee for the above-identified patent.

The petition under 37 CFR 1.378(b) is **DISMISSED**.

The above-identified patent issued August 10, 1993. Accordingly, the third maintenance fee could have been paid during the period from August 10, 2004 through February 10, 2005 without surcharge, or with a surcharge of $65 during the period from February 11, 2005 through August 10, 2005. The patent expired on August 11, 2005.

Analysis:

37 CFR 1.378(b) provides that:

> Any petition to accept an unavoidably delayed payment of a maintenance fee must include:
>
> (1) The required maintenance fee set forth in 37 CFR 1.20(e) through (g) (currently $1,575);
>
> (2) The surcharge set forth in 37 CFR 1.20(i)(1) (currently $700); and

> (3) A showing that the delay was unavoidable since reasonable care was taken to ensure that the maintenance fee would be paid timely and that the petition was filed promptly after the patentee was notified of, or otherwise became aware of, the expiration of the patent. The showing must enumerate the steps taken to ensure timely payment of the maintenance fee, the date and the manner in which patentee became aware of the expiration of the patent, and the steps taken to file the petition promptly.

The instant petition does not meet requirement (3) above.

With regards to requirement (3), acceptance of a late maintenance fee under the unavoidable delay standard is considered under the same standard for reviving an abandoned application under 35 USC 133. **This is a very stringent standard.** Decisions on reviving abandoned applications on the basis of "unavoidable" delay have adopted the reasonably prudent person standard in determining if the delay was unavoidable:

> The word 'unavoidable' ... is applicable to ordinary human affairs, and requires no more or greater care or diligence than is generally used and observed by prudent and careful men in relation to their most important business. In addition, decisions are made on a "case-by-case basis, taking all the facts and circumstances into account." Smith, 671 F.2d at 538, 213 U.S.P.Q. at 982. Nonetheless, a petition cannot be granted where a petitioner has failed to meet his or her burden of establishing that the delay was "unavoidable." Haines, 673 F. Supp. at 316-17, 5 U.S.P.Q.2d at 1131-32.

Petitioner asserts poor health as grounds for unavoidable delay. A showing of "unavoidable" delay based upon incapacitation must establish that petitioner's incapacitation was of such nature and degree as to render petitioner unable to conduct business (e.g., correspond with the Office by paying the maintenance fee) during the period between August 10, 2004 and May 17, 2006. Such a showing must be supported by a **statement from petitioner's treating physician**, and such statement must provide the nature and degree of petitioner's incapacitation during the above-mentioned period.

Conclusion:

Any request for reconsideration of this decision must be filed within **TWO MONTHS** of the mailing date of this decision. Any such petition for reconsideration must be accompanied by the $400 petition fee set forth in §1.17(f). After decision on the petition for reconsideration, no further reconsideration or review of the matter will be undertaken by the Commissioner. Accordingly, on request for reconsideration, it is extremely important that petitioner supply **any** and **all** relevant information and documentation in order to meet his burden of showing unavoidable delay.

If on request for reconsideration, the delayed payment of the maintenance fee is not accepted, then $2,600 submitted for the maintenance fee and the surcharge set forth in §1.20(i) are subject to refund following the decision on the petition for reconsideration, or after the expiration of the time for filing such a petition for reconsideration, if none is filed. Petitioner may request a refund of the maintenance fee and surcharge by writing to: Mail Stop 16, Director of the USPTO, P.O. Box 1450, Alexandria, VA 22313-1450. A copy of the last decision rendered should accompany the request for refund. The $400 fee for requesting reconsideration is not subject to refund.

If petitioner can not establish unavoidable delay, petitioner may file a petition to reinstate the patent on the basis of unintentional delay under 37 CFR 1.378(c). Petitioner has until August 10, 2007, to file a petition under 37 CFR 1.378(c).[1] Petitioner may apply the maintenance fee and surcharge previously submitted with the instant petition towards the petition under 37 CFR 1.378(c). The surcharge for a petition under 37 CFR 1.378(c) is currently $1,640.

Further correspondence should be addressed as follows:

By mail: Mail Stop Petitions
Commissioner for Patents
P.O. Box 1450
Alexandria VA 22313-1450

By FAX: (571)273-8300
Attn: Office of Petitions

Telephone inquiries specific to this decision may be directed to the undersigned at (571)272-3207.

Cliff Congo
Petitions Attorney
Office of Petitions

[1] See 37 CFR 1.378(c).

UNITED STATES PATENT AND TRADEMARK OFFICE

COMMISSIONER FOR PATENTS
UNITED STATES PATENT AND TRADEMARK OFFICE
P.O. BOX 1450
ALEXANDRIA, VA 22313-1450
www.uspto.gov

Paper No. 19

Ole K. Nilssen
200 N Harrison Street
Suite 103
Algonquin, IL 60102

COPY MAILED

FEB 15 2006

OFFICE OF PETITIONS

In re Patent No. 5,343,123	:	
Issue Date: August 30, 1994	:	
Application No. 07/933,891	:	NOTICE
Filed: August 24, 1992	:	
Patentee(s): Ole K. Nilssen	:	

This is a notice regarding your request for acceptance of a fee deficiency submission under 37 CFR 1.28 filed December 5, 2005. On September 1, 1998, the Court of Appeals for the Federal Circuit held that 37 CFR 1.28(c) is the sole provision governing the time for correction of the erroneous payment of the issue fee as a small entity. **See DH Technology v. Synergystex International, Inc. 154 F.3d 1333, 47 USPQ2d 1865 (Fed. Cir. Sept. 1, 1998).**

The Office no longer investigates or rejects original or reissue applications under 37 CFR 1.56. **1098 Off. Gaz. Pat. Office 502 (January 3, 1989)**. Therefore, nothing in this Notice is intended to imply that an investigation was done.

Your fee deficiency submission under 37 CFR 1.28 is hereby **ACCEPTED**.

This application is no longer entitled to small entity status. Accordingly, all future fees paid in this application must be paid at the large entity rate.

Inquiries related to this communication should be directed to the undersigned at (571) 272-3226.

Andrea Smith
Petitions Examiner
Office of Petitions

UNITED STATES PATENT AND TRADEMARK OFFICE

Commissioner for Patents
United States Patent and Trademark Office
P.O. Box 1450
Alexandria, VA 22313-1450
www.uspto.gov

VENABLE LLP
P.O. BOX 34385
WASHINGTON DC 20045-9998

COPY MAILED

AUG 30 2005

OFFICE OF PETITIONS

In re Patent No. 5,505,464	:	
Issue Date: April 9, 1996	:	
Application No. 07/937,560	:	DECISION GRANTING PETITION
Filed: August 31, 1992	:	UNDER 37 CFR 1.378(c)
Attorney Docket No. 36690-161584	:	

This is a decision on the petition under 37 CFR 1.378(c), filed January 24, 2005, to accept the unintentionally delayed payment of a maintenance fee for the above-identified patent.

The petition is **GRANTED**.

The patent issued on April 9, 1996. The grace period for paying the second maintenance fee expired at midnight on April 9, 2004. Therefore, since this petition was filed within twenty-four months after the six-month grace period provided in 37 CFR 1.362(e), the petition was timely filed under the provisions of 37 CFR 1.378(c).

Accordingly, the maintenance fee in this case is hereby accepted, and the above-identified patent is reinstated as of the mail date of this decision.

The address of record differs slightly from the petitioner's address. While a courtesy copy of this petition is being sent to person signing the instant petition, all future correspondences will be directed to the address currently of record until such time as appropriate instructions are received to the contrary.

Telephone inquiries concerning this decision should be directed to Denise Pothier at (571) 272-4787.

The patent file is being forwarded to Files Repository.

Frances Hicks
Frances Hicks
Petitions Examiner
Office of Petitions

cc: VENABLE LLP
P.O. BOX 34385
WASHINGTON DC 20043-9998

Best Available Copy

SPE RESPONSE FOR CERTIFICATE OF CORRECTION

Paper No.: _____

DATE : 04/12/2006

TO SPE OF : ART UNIT **1600 (1646)**

SUBJECT : Request for Certificate of Correction on Patent No.: **5,981,193**

A response is requested with respect to the accompanying request for a certificate of correction.

Please complete this form and return with file, within **7** days to:
Certificates of Correction Branch - PK 3-922
Palm location **7580** - Tel. No. 305-8309

With respect to the change(s) requested, correcting Office and/or Applicant's errors, should the patent read as shown in the certificate of correction? No new matter should be introduced, nor should the scope or meaning of the claims be changed.

Ok for enter changes to claim 3 as requested in C of C? See red tab in file amdt H.

Ernest C. White, LIE305-8339
Certificates of Correction Branch

Thank You For Your Assistance

The request for issuing the above-identified correction(s) is hereby:
Note your decision on the appropriate box.

- ☒ **Approved** — **All** changes apply.
- ☐ **Approved in Part** — Specify below which changes **do not** apply.
- ☐ **Denied** — State the reasons for denial below.

Comments:

_____

_____

_____

_____

_____

SPE — 1649 Art Unit

UNITED STATES PATENT AND TRADEMARK OFFICE

CERTIFICATE OF CORRECTION

PATENT NO.: 5,981,193 07/938154

DATED: November 9, 1999

INVENTOR(S): Harpold *et al.*

It is certified that error appears in the above-identified patent and that said Letters Patent is hereby corrected as shown below:

TITLE PAGE, ITEM (56)

IN THE REFERENCES CITED, ITEM [56]

Please add the following in the Other Publications:

EMBASE abstract #90191445, Kouzarides *et al.* Behind the Fos an Jun Leucine zipper, *Cancer Cells USA* 1(3):71-76 (1989).

Gorman *et al.*, Recombinant genomes which express chloramphenicol acetyltransferase in mammalian cells, *Mol. Cell. Biol.* 2(9): 1044-1051 (1982).

~~**IN THE SPECIFICATION:**~~

at column 3, line 66, please replace "Figure 4" with —Figure 4A-C—;
at column 4, line 5, please replace "Figure 5" with —Figure 5A-B—;
at column 4, line 11, please replace "Figure 6" with —Figure 6A-E—;
at column 4, line 17, please replace "Figure 7" with —Figure 7A-B—;
at column 4, line 19, please replace "Figure 8" with —Figure 8A-B—;
at column 4, line 21, please replace "Figure 9" with —Figure 9A-E—;
at column 5, line 61, please replace "Figure 7" with —Figure 7A-B—;
at column 6, line 1, please replace "Figure 8" with —Figure 8A-B—;
at column 6, line 8, please replace "Figure 9" with —Figure 9A-E—;
at column 6, line 59, please replace "hight" with —high—;
at column 7, line 2, please replace "Figures 4, 5 and 6" with —Figures 4A-C, 5A-B and 6A-E—;
at column 9, line 57, please replace "Figures 4, 5 and 6" with —Figures 4A-C, 5A-B and 6A-E—;
at column 9, line 62, please replace "Figures 7, 8 and 9" with —Figures 7A-B, 8A-B and 9A-E—;
at column 10, line 6, please replace "Figure 7" with —Figure 7A-B—;
at column 10, line 8, please replace "Figure 8" with —Figure 8A-B—;
at column 10, line 9, please replace "Figure 9" with —Figure 9A-E—;

IN THE CLAIMS:

Please replace claim 3 with the following claim:

3. An isolated and purified human neuronal nicotinic acetylcholine receptor subunit encoded by the beta 2-encoding nucleic acid in a plasmid having all of the identifying characteristics of HnAChRβ2 deposited under ATCC Accession No. 68279.

Mailing Address of Sender:
Stephanie L. Seidman, Esq.
HELLER, EHRMAN, WHITE & McAULIFFE
4250 Executive Square, 7th Floor
La Jolla, California 92037-9103

UNITED STATES PATENT AND TRADEMARK OFFICE

CERTIFICATE OF CORRECTION

PATENT NO.: 5,981,193

DATED: November 9, 1999

INVENTOR(S): Harpold *et al.*

It is certified that error appears in the above-identified patent and that said Letters Patent is hereby corrected as shown below:

IN THE REFERENCES CITED, ITEM [56]

Please add the following in the Other Publications:

EMBASE abstract #90191445, Kouzarides *et al.* Behind the Fos an Jun Leucine zipper, *Cancer Cells USA* 1(3):71-76 (1989).

Gorman *et al.*, Recombinant genomes which express chloramphenicol acetyltransferase in mammalian cells, *Mol. Cell. Biol.* 2(9): 1044-1051 (1982).

IN THE SPECIFICATION:

at column 3, line 66, please replace "Figure 4" with —Figure 4A-C—;
at column 4, line 5, please replace "Figure 5" with —Figure 5A-B—;
at column 4, line 11, please replace "Figure 6" with —Figure 6A-E—;
at column 4, line 17, please replace "Figure 7" with —Figure 7A-B—;
at column 4, line 19, please replace "Figure 8" with —Figure 8A-B—;
at column 4, line 21, please replace "Figure 9" with —Figure 9A-E—;
at column 5, line 61, please replace "Figure 7" with —Figure 7A-B—;
at column 6, line 1, please replace "Figure 8" with —Figure 8A-B—;
at column 6, line 8, please replace "Figure 9" with —Figure 9A-E—;
at column 6, line 59, please replace "hight" with —high—;
at column 7, line 2, please replace "Figures 4, 5 and 6" with —Figures 4A-C, 5A-B and 6A-E—;
at column 9, line 57, please replace "Figures 4, 5 and 6" with —Figures 4A-C, 5A-B and 6A-E—;
at column 9, line 62, please replace "Figures 7, 8 and 9" with —Figures 7A-B, 8A-B and 9A-E—;
at column 10, line 6, please replace "Figure 7" with —Figure 7A-B—;
at column 10, line 8, please replace "Figure 8" with —Figure 8A-B—;
at column 10, line 9, please replace "Figure 9" with —Figure 9A-E—;

IN THE CLAIMS:

Please replace claim 3 with the following claim:

3. An isolated and purified human neuronal nicotinic acetylcholine receptor subunit encoded by the beta 2-encoding nucleic acid in a plasmid having all of the identifying characteristics of HnAChRβ2 deposited under ATCC Accession No. 68279.

Mailing Address of Sender:
Stephanie L. Seidman, Esq.
HELLER, EHRMAN, WHITE & McAULIFFE
4250 Executive Square, 7th Floor
La Jolla, California 92037-9103

Under the Paperwork Reduction Act of 1995, no persons are required to respond to a collection of information unless it displays valid OMB control number.

PETITION TO ACCEPT UNINTENTIONALLY DELAYED PAYMENT OF MAINTENANCE FEE IN AN EXPIRED PATENT (37 CFR 1.378(c))

Patent Number	Issue Date (YYYY-MM-DD)	Application Number	Filing Date (YYYY-MM-DD)	Docket Number (if applicable)
5303043	1994-04-12	07938712	1992-09-01	071759.0101

CAUTION: Maintenance fee (and surcharge, if any) payment must correctly identify: (1) the patent number and (2) the application number of the actual U.S. application leading to issuance of that patent to ensure the fee(s) is/are associated with the correct patent. 37 CFR 1.366(c) and (d).

SMALL ENTITY
☒ Patentee claims, or has previously claimed, small entity status. See 37 CFR 1.27.

LOSS OF ENTITLEMENT TO SMALL ENTITY STATUS
☐ Patentee is no longer entitled to small entity status. See 37 CFR 1.27(g)

NOT Small Entity			Small Entity		
	Fee	Code		Fee	Code
○	3 ½ year	(1551)	○	3 ½ year	(2551)
○	7 ½ year	(1552)	○	7 ½ year	(2552)
○	11 ½ year	(1553)	◉	11 ½ year	(2553)

SURCHARGE
The surcharge required by 37 CFR 1.20(i)(2) (Fee Code 1558) must be paid as a condition of accepting unintentionally delayed payment of the maintenance fee.

MAINTENANCE FEE (37 CFR 1.20(e)-(g))
The appropriate maintenance fee must be submitted with this petition.

STATEMENT
THE UNDERSIGNED CERTIFIES THAT THE DELAY IN PAYMENT OF THE MAINTENANCE FEE TO THIS PATENT WAS UNINTENTIONAL

PETITIONER(S) REQUEST THAT THE DELAYED PAYMENT OF THE MAINTENANCE FEE BE ACCEPTED AND THE PATENT REINSTATED

THIS PORTION MUST BE COMPLETED BY THE SIGNATORY OR SIGNATORIES

37 CFR 1.378(d) states: "Any petition under this section must be signed by an attorney or agent registered to practice before the Patent and Trademark Office, or by the patentee, the assignee, or other party in interest."

I certify, in accordance with 37 CFR 1.4(d)(4) that I am

◉ An attorney or agent registered to practice before the Patent and Trademark Office

○ A sole patentee

○ A joint patentee; I certify that I am authorized to sign this submission on behalf of all the other patentees.

○ A joint patentee; all of whom are signing this e-petition

○ The assignee of record of the entire interest

Patent Practitioner			
A signature of the applicant or representative is required in accordance with 37 CFR 1.33 and 10.18. Please see 37 CFR 1.4(d) for the form of the signature			
Signature	/Robert Neuner/	Date (YYYY-MM-DD)	2007-09-25
Name	Robert Neuner	Registration Number	24316

This collection of information is required by 37 CFR 1.378(c). The information is required to obtain or retain a benefit by the public which is to file (and by the USPTO to process) an application. Confidentiality is governed by 35 U.S.C. 122 and 37 CFR 1.11 and 1.14. This collection is estimated to take 1 hour to complete, including gathering, preparing, and submitting the completed application form to the USPTO. Time will vary depending upon the individual case. Any comments on the amount of time you require to complete this form and/ or suggestions for reducing this burden, should be sent to the Chief Information Officer, U.S. Patent and Trademark Office, U.S. Department of Commerce, P.O. Box 1450, Alexandria, VA 22313-1450. DO NOT SEND FEES OR COMPLETED FORMS TO THIS ADDRESS. **This form can only be used when in conjunction with EFS-Web. If this form is mailed to the USPTO, it may cause delays in reinstating the patent.**

Privacy Act Statement

The Privacy Act of 1974 (P.L. 93-579) requires that you be given certain information in connection with your submission of the attached form related to a patent application or patent. Accordingly, pursuant to the requirements of the Act, please be advised that: (1) the general authority for the collection of this information is 35 U.S.C. 2(b)(2); (2) furnishing of the information solicited is voluntary; and (3) the principal purpose for which the information is used by the U.S. Patent and Trademark Office is to process and/or examine your submission related to a patent application or patent. If you do not furnish the requested information, the U.S. Patent and Trademark Office may not be able to process and/or examine your submission, which may result in termination of proceedings or abandonment of the application or expiration of the patent.

The information provided by you in this form will be subject to the following routine uses:

1. The information on this form will be treated confidentially to the extent allowed under the Freedom of Information Act (5 U.S.C. 552) and the Privacy Act (5 U.S.C. 552a). Records from this system of records may be disclosed to the Department of Justice to determine whether the Freedom of Information Act requires disclosure of these record s.

2. A record from this system of records may be disclosed, as a routine use, in the course of presenting evidence to a court, magistrate, or administrative tribunal, including disclosures to opposing counsel in the course of settlement negotiations.

3. A record in this system of records may be disclosed, as a routine use, to a Member of Congress submitting a request involving an individual, to whom the record pertains, when the individual has requested assistance from the Member with respect to the subject matter of the record.

4. A record in this system of records may be disclosed, as a routine use, to a contractor of the Agency having need for the information in order to perform a contract. Recipients of information shall be required to comply with the requirements of the Privacy Act of 1974, as amended, pursuant to 5 U.S.C. 552a(m).

5. A record related to an International Application filed under the Patent Cooperation Treaty in this system of records may be disclosed, as a routine use, to the International Bureau of the World Intellectual Property Organization, pursuant to the Patent Cooperation Treaty.

6. A record in this system of records may be disclosed, as a routine use, to another federal agency for purposes of National Security review (35 U.S.C. 181) and for review pursuant to the Atomic Energy Act (42 U.S.C. 218(c)).

7. A record from this system of records may be disclosed, as a routine use, to the Administrator, General Services, or his/her designee, during an inspection of records conducted by GSA as part of that agency's responsibility to recommend improvements in records management practices and programs, under authority of 44 U.S.C. 2904 and 2906. Such disclosure shall be made in accordance with the GSA regulations governing inspection of records for this purpose, and any other relevant (i.e., GSA or Commerce) directive. Such disclosure shall not be used to make determinations about individuals.

8. A record from this system of records may be disclosed, as a routine use, to the public after either publication of the application pursuant to 35 U.S.C. 122(b) or issuance of a patent pursuant to 35 U.S.C. 151. Further, a record may be disclosed, subject to the limitations of 37 CFR 1.14, as a routine use, to the public if the record was filed in an application which became abandoned or in which the proceedings were terminated and which application is referenced by either a published application, an application open to public inspections or an issued patent.

9. A record from this system of records may be disclosed, as a routine use, to a Federal, State, or local law enforcement agency, if the USPTO becomes aware of a violation or potential violation of law or regulation.

UNITED STATES PATENT AND TRADEMARK OFFICE

Commissioner for Patents
United States Patent and Trademark Office
P.O. Box 1450
Alexandria, VA 22313-1450
www.uspto.gov

In re Patent No. 5303043
Issue Date: April 12,1994
Application No. 07938712
Filed: September 1,1992
Attorney Docket No. 28740-1759/2

:
:DECISION GRANTING PETITION
:UNDER 37 CFR 1.378(c)
:

This is a decision on the electronic petition, filed September 25,2007,under 37 CFR 1.378(c) to accept the unintentionally delayed payment of the 11.5 year maintenance fee for the above-identified patent.

The petition is GRANTED.

The maintenance fee is accepted, and the above-identified patent reinstated as of September 25,2007. This decision also constitutes notice that the fee has been accepted. An electronic copy of the petition and this decision has been created as an entry in an Image File Wrapper. Nevertheless, petitioner should print and retain an independent copy

Telephone inquires related to this electronic decision should be directed to the Electronic Business Center at 1-866-217-9197.

Under the Paperwork Reduction Act of 1995, no persons are required to respond to a collection of information unless it displays valid OMB control number.

PETITION TO ACCEPT UNINTENTIONALLY DELAYED PAYMENT OF MAINTENANCE FEE IN AN EXPIRED PATENT (37 CFR 1.378(c))

Patent Number	Issue Date (YYYY-MM-DD)	Application Number	Filing Date (YYYY-MM-DD)	Docket Number (if applicable)
5,399,799	1995-03-21	07/940,473	1992-09-04	

CAUTION: Maintenance fee (and surcharge, if any) payment must correctly identify: (1) the patent number and (2) the application number of the actual U.S. application leading to issuance of that patent to ensure the fee(s) is/are associated with the correct patent. 37 CFR 1.366(c) and (d).

SMALL ENTITY
☒ Patentee claims, or has previously claimed, small entity status. See 37 CFR 1.27.

LOSS OF ENTITLEMENT TO SMALL ENTITY STATUS
☐ Patentee is no longer entitled to small entity status. See 37 CFR 1.27(g)

NOT Small Entity			Small Entity		
	Fee	Code		Fee	Code
○	3 ½ year	(1551)	○	3 ½ year	(2551)
○	7 ½ year	(1552)	○	7 ½ year	(2552)
○	11 ½ year	(1553)	◉	11 ½ year	(2553)

SURCHARGE
The surcharge required by 37 CFR 1.20(i)(2) (Fee Code 1558) must be paid as a condition of accepting unintentionally delayed payment of the maintenance fee.

MAINTENANCE FEE (37 CFR 1.20(e)-(g))
The appropriate maintenance fee must be submitted with this petition.

STATEMENT
THE UNDERSIGNED CERTIFIES THAT THE DELAY IN PAYMENT OF THE MAINTENANCE FEE TO THIS PATENT WAS UNINTENTIONAL

PETITIONER(S) REQUEST THAT THE DELAYED PAYMENT OF THE MAINTENANCE FEE BE ACCEPTED AND THE PATENT REINSTATED

THIS PORTION MUST BE COMPLETED BY THE SIGNATORY OR SIGNATORIES

37 CFR 1.378(d) states: "Any petition under this section must be signed by an attorney or agent registered to practice before the Patent and Trademark Office, or by the patentee, the assignee, or other party in interest."

I certify, in accordance with 37 CFR 1.4(d)(4) that I am

○ An attorney or agent registered to practice before the Patent and Trademark Office

○ A sole patentee

○ A joint patentee; I certify that I am authorized to sign this submission on behalf of all the other patentees.

○ A joint patentee; all of whom are signing this e-petition

◉ The assignee of record of the entire interest

The Assignee of record of the entire interest			
Under 37 CFR 3.71 an assignee becomes of record by filing a statement in compliance with 37 CFR 3.73(b). Signature requirements are set forth in 37 CFR 1.4(d), and the undersigned certifies that he / she is empowered to act on behalf of the assignee of the entire interest			
Signature	/Don Millers/	Date (YYYY-MM-DD)	2008-11-04
Name	Don Millers, President of Beatnik, Inc.		
Enter Reel and Frame Number		Remove	
Reel Number	021773	Frame Number	0946
Click ADD for additional Reel Number and Frame Number		Add	

This collection of information is required by 37 CFR 1.378(c). The information is required to obtain or retain a benefit by the public which is to file (and by the USPTO to process) an application. Confidentiality is governed by 35 U.S.C. 122 and 37 CFR 1.11 and 1.14. This collection is estimated to take 1 hour to complete, including gathering, preparing, and submitting the completed application form to the USPTO. Time will vary depending upon the individual case. Any comments on the amount of time you require to complete this form and/ or suggestions for reducing this burden, should be sent to the Chief Information Officer, U.S. Patent and Trademark Office, U.S. Department of Commerce, P.O. Box 1450, Alexandria, VA 22313-1450. DO NOT SEND FEES OR COMPLETED FORMS TO THIS ADDRESS. **This form can only be used when in conjunction with EFS-Web. If this form is mailed to the USPTO, it may cause delays in reinstating the patent.**

Privacy Act Statement

The Privacy Act of 1974 (P.L. 93-579) requires that you be given certain information in connection with your submission of the attached form related to a patent application or patent. Accordingly, pursuant to the requirements of the Act, please be advised that: (1) the general authority for the collection of this information is 35 U.S.C. 2(b)(2); (2) furnishing of the information solicited is voluntary; and (3) the principal purpose for which the information is used by the U.S. Patent and Trademark Office is to process and/or examine your submission related to a patent application or patent. If you do not furnish the requested information, the U.S. Patent and Trademark Office may not be able to process and/or examine your submission, which may result in termination of proceedings or abandonment of the application or expiration of the patent.

The information provided by you in this form will be subject to the following routine uses:

1. The information on this form will be treated confidentially to the extent allowed under the Freedom of Information Act (5 U.S.C. 552) and the Privacy Act (5 U.S.C. 552a). Records from this system of records may be disclosed to the Department of Justice to determine whether the Freedom of Information Act requires disclosure of these record s.

2. A record from this system of records may be disclosed, as a routine use, in the course of presenting evidence to a court, magistrate, or administrative tribunal, including disclosures to opposing counsel in the course of settlement negotiations.

3. A record in this system of records may be disclosed, as a routine use, to a Member of Congress submitting a request involving an individual, to whom the record pertains, when the individual has requested assistance from the Member with respect to the subject matter of the record.

4. A record in this system of records may be disclosed, as a routine use, to a contractor of the Agency having need for the information in order to perform a contract. Recipients of information shall be required to comply with the requirements of the Privacy Act of 1974, as amended, pursuant to 5 U.S.C. 552a(m).

5. A record related to an International Application filed under the Patent Cooperation Treaty in this system of records may be disclosed, as a routine use, to the International Bureau of the World Intellectual Property Organization, pursuant to the Patent Cooperation Treaty.

6. A record in this system of records may be disclosed, as a routine use, to another federal agency for purposes of National Security review (35 U.S.C. 181) and for review pursuant to the Atomic Energy Act (42 U.S.C. 218(c)).

7. A record from this system of records may be disclosed, as a routine use, to the Administrator, General Services, or his/her designee, during an inspection of records conducted by GSA as part of that agency's responsibility to recommend improvements in records management practices and programs, under authority of 44 U.S.C. 2904 and 2906. Such disclosure shall be made in accordance with the GSA regulations governing inspection of records for this purpose, and any other relevant (i.e., GSA or Commerce) directive. Such disclosure shall not be used to make determinations about individuals.

8. A record from this system of records may be disclosed, as a routine use, to the public after either publication of the application pursuant to 35 U.S.C. 122(b) or issuance of a patent pursuant to 35 U.S.C. 151. Further, a record may be disclosed, subject to the limitations of 37 CFR 1.14, as a routine use, to the public if the record was filed in an application which became abandoned or in which the proceedings were terminated and which application is referenced by either a published application, an application open to public inspections or an issued patent.

9. A record from this system of records may be disclosed, as a routine use, to a Federal, State, or local law enforcement agency, if the USPTO becomes aware of a violation or potential violation of law or regulation.

UNITED STATES PATENT AND TRADEMARK OFFICE

Commissioner for Patents
United States Patent and Trademark Office
P.O. Box 1450
Alexandria, VA 22313-1450
www.uspto.gov

In re Patent No. 5399799
Issue Date: March 21,1995
Application No. 07940473
Filed: September 4,1992
Attorney Docket No. 832

:DECISION GRANTING PETITION
:UNDER 37 CFR 1.378(c)

This is a decision on the electronic petition, filed November 4,2008 ,under 37 CFR 1.378(c) to accept the unintentionally delayed payment of the 11.5 year maintenance fee for the above-identified patent.

The petition is **GRANTED**.

The maintenance fee is accepted, and the above-identified patent reinstated as of November 4,2008 . This decision also constitutes notice that the fee has been accepted. An electronic copy of the petition and this decision has been created as an entry in the Image File Wrapper. Nevertheless, petitioner should print and retain an independent copy.

Telephone inquiries related to this electronic decision should be directed to the Electronic Business Center at 1-866-217-9197.

Approved for use through 04/30/2009. OMB 0651-0016
U.S. Patent and Trademark Office: U.S. DEPARTMENT OF COMMERCE
Under the Paperwork Reduction Act of 1995, no persons are required to respond to a collection of information unless it displays valid OMB control number.

PETITION TO ACCEPT UNINTENTIONALLY DELAYED PAYMENT OF MAINTENANCE FEE IN AN EXPIRED PATENT (37 CFR 1.378(c))

Patent Number	Issue Date (YYYY-MM-DD)	Application Number	Filing Date (YYYY-MM-DD)	Docket Number (if applicable)
5388488	1995-02-14	07944452	1992-09-14	EVED525475

CAUTION: Maintenance fee (and surcharge, if any) payment must correctly identify: (1) the patent number and (2) the application number of the actual U.S. application leading to issuance of that patent to ensure the fee(s) is/are associated with the correct patent. 37 CFR 1.366(c) and (d).

SMALL ENTITY
☒ Patentee claims, or has previously claimed, small entity status. See 37 CFR 1.27.

LOSS OF ENTITLEMENT TO SMALL ENTITY STATUS
☐ Patentee is no longer entitled to small entity status. See 37 CFR 1.27(g)

NOT Small Entity			Small Entity		
	Fee	Code		Fee	Code
○	3 ½ year	(1551)	○	3 ½ year	(2551)
○	7 ½ year	(1552)	○	7 ½ year	(2552)
○	11 ½ year	(1553)	◉	11 ½ year	(2553)

SURCHARGE
The surcharge required by 37 CFR 1.20(i)(2) (Fee Code 1558) must be paid as a condition of accepting unintentionally delayed payment of the maintenance fee.

MAINTENANCE FEE (37 CFR 1.20(e)-(g))
The appropriate maintenance fee must be submitted with this petition.

STATEMENT
THE UNDERSIGNED CERTIFIES THAT THE DELAY IN PAYMENT OF THE MAINTENANCE FEE TO THIS PATENT WAS UNINTENTIONAL

PETITIONER(S) REQUEST THAT THE DELAYED PAYMENT OF THE MAINTENANCE FEE BE ACCEPTED AND THE PATENT REINSTATED

THIS PORTION MUST BE COMPLETED BY THE SIGNATORY OR SIGNATORIES

37 CFR 1.378(d) states: "Any petition under this section must be signed by an attorney or agent registered to practice before the Patent and Trademark Office, or by the patentee, the assignee, or other party in interest."

I certify, in accordance with 37 CFR 1.4(d)(4) that I am

◉ An attorney or agent registered to practice before the Patent and Trademark Office

○ A sole patentee

○ A joint patentee; I certify that I am authorized to sign this submission on behalf of all the other patentees.

○ A joint patentee; all of whom are signing this e-petition

○ The assignee of record of the entire interest

Patent Practitioner			
A signature of the applicant or representative is required in accordance with 37 CFR 1.33 and 10.18. Please see 37 CFR 1.4(d) for the form of the signature			
Signature	/Emily C. Peyser/	Date (YYYY-MM-DD)	2007-07-25
Name	Emily C. Peyser	Registration Number	59844

This collection of information is required by 37 CFR 1.378(c). The information is required to obtain or retain a benefit by the public which is to file (and by the USPTO to process) an application. Confidentiality is governed by 35 U.S.C. 122 and 37 CFR 1.11 and 1.14. This collection is estimated to take 1 hour to complete, including gathering, preparing, and submitting the completed application form to the USPTO. Time will vary depending upon the individual case. Any comments on the amount of time you require to complete this form and/ or suggestions for reducing this burden, should be sent to the Chief Information Officer, U.S. Patent and Trademark Office, U.S. Department of Commerce, P.O. Box 1450, Alexandria, VA 22313-1450. DO NOT SEND FEES OR COMPLETED FORMS TO THIS ADDRESS. **This form can only be used when in conjunction with EFS-Web. If this form is mailed to the USPTO, it may cause delays in reinstating the patent.**

Privacy Act Statement

The Privacy Act of 1974 (P.L. 93-579) requires that you be given certain information in connection with your submission of the attached form related to a patent application or patent. Accordingly, pursuant to the requirements of the Act, please be advised that: (1) the general authority for the collection of this information is 35 U.S.C. 2(b)(2); (2) furnishing of the information solicited is voluntary; and (3) the principal purpose for which the information is used by the U.S. Patent and Trademark Office is to process and/or examine your submission related to a patent application or patent. If you do not furnish the requested information, the U.S. Patent and Trademark Office may not be able to process and/or examine your submission, which may result in termination of proceedings or abandonment of the application or expiration of the patent.

The information provided by you in this form will be subject to the following routine uses:

1. The information on this form will be treated confidentially to the extent allowed under the Freedom of Information Act (5 U.S.C. 552) and the Privacy Act (5 U.S.C. 552a). Records from this system of records may be disclosed to the Department of Justice to determine whether the Freedom of Information Act requires disclosure of these record s.

2. A record from this system of records may be disclosed, as a routine use, in the course of presenting evidence to a court, magistrate, or administrative tribunal, including disclosures to opposing counsel in the course of settlement negotiations.

3. A record in this system of records may be disclosed, as a routine use, to a Member of Congress submitting a request involving an individual, to whom the record pertains, when the individual has requested assistance from the Member with respect to the subject matter of the record.

4. A record in this system of records may be disclosed, as a routine use, to a contractor of the Agency having need for the information in order to perform a contract. Recipients of information shall be required to comply with the requirements of the Privacy Act of 1974, as amended, pursuant to 5 U.S.C. 552a(m).

5. A record related to an International Application filed under the Patent Cooperation Treaty in this system of records may be disclosed, as a routine use, to the International Bureau of the World Intellectual Property Organization, pursuant to the Patent Cooperation Treaty.

6. A record in this system of records may be disclosed, as a routine use, to another federal agency for purposes of National Security review (35 U.S.C. 181) and for review pursuant to the Atomic Energy Act (42 U.S.C. 218(c)).

7. A record from this system of records may be disclosed, as a routine use, to the Administrator, General Services, or his/her designee, during an inspection of records conducted by GSA as part of that agency's responsibility to recommend improvements in records management practices and programs, under authority of 44 U.S.C. 2904 and 2906. Such disclosure shall be made in accordance with the GSA regulations governing inspection of records for this purpose, and any other relevant (i.e., GSA or Commerce) directive. Such disclosure shall not be used to make determinations about individuals.

8. A record from this system of records may be disclosed, as a routine use, to the public after either publication of the application pursuant to 35 U.S.C. 122(b) or issuance of a patent pursuant to 35 U.S.C. 151. Further, a record may be disclosed, subject to the limitations of 37 CFR 1.14, as a routine use, to the public if the record was filed in an application which became abandoned or in which the proceedings were terminated and which application is referenced by either a published application, an application open to public inspections or an issued patent.

9. A record from this system of records may be disclosed, as a routine use, to a Federal, State, or local law enforcement agency, if the USPTO becomes aware of a violation or potential violation of law or regulation.

UNITED STATES PATENT AND TRADEMARK OFFICE

Commissioner for Patents
United States Patent and Trademark Office
P.O. Box 1450
Alexandria, VA 22313-1450
www.uspto.gov

In re Patent No. 5388488
Issue Date: February 14,1995
Application No. 07944452
Filed: September 14,1992
Attorney Docket No. AR9-001

:
:DECISION GRANTING PETITION
:UNDER 37 CFR 1.378(c)
:

This is a decision on the electronic petition, filed July 25,2007 ,under 37 CFR 1.378(c) to accept the unintentionally delayed payment of the 11.5 year maintenance fee for the above-identified patent.

The petition is GRANTED.

The maintenance fee is accepted, and the above-identified patent reinstated as of July 25,2007 . This decision also constitutes notice that the fee has been accepted. An electronic copy of the petition and this decision has been created as an entry in an Image File Wrapper. Nevertheless, petitioner should print and retain an independent copy

Telephone inquires related to this electronic decision should be directed to the Electronic Business Center at 1-866-217-9197.

PTO/SB/66 (03-09)
Approved for use through 03/31/2012. OMB 0651-0016
U.S. Patent and Trademark Office: U.S. DEPARTMENT OF COMMERCE
Under the Paperwork Reduction Act of 1995, no persons are required to respond to a collection of information unless it displays valid OMB control number.

PETITION TO ACCEPT UNINTENTIONALLY DELAYED PAYMENT OF MAINTENANCE FEE IN AN EXPIRED PATENT (37 CFR 1.378(c))

Patent Number	Issue Date (YYYY-MM-DD)	Application Number	Filing Date (YYYY-MM-DD)	Docket Number (if applicable)
5665461	1997-09-09	07945176	1992-09-15	HY026

CAUTION: Maintenance fee (and surcharge, if any) payment must correctly identify: (1) the patent number and (2) the application number of the actual U.S. application leading to issuance of that patent to ensure the fee(s) is/are associated with the correct patent. 37 CFR 1.366(c) and (d).

SMALL ENTITY

☐ Patentee claims, or has previously claimed, small entity status. See 37 CFR 1.27.

LOSS OF ENTITLEMENT TO SMALL ENTITY STATUS

☐ Patentee is no longer entitled to small entity status. See 37 CFR 1.27(g)

NOT Small Entity			Small Entity		
	Fee	Code		Fee	Code
○	3 ½ year	(1551)	○	3 ½ year	(2551)
○	7 ½ year	(1552)	○	7 ½ year	(2552)
◉	11 ½ year	(1553)	○	11 ½ year	(2553)

SURCHARGE

The surcharge required by 37 CFR 1.20(i)(2) (Fee Code 1558) must be paid as a condition of accepting unintentionally delayed payment of the maintenance fee.

MAINTENANCE FEE (37 CFR 1.20(e)-(g))

The appropriate maintenance fee must be submitted with this petition.

STATEMENT

THE UNDERSIGNED CERTIFIES THAT THE DELAY IN PAYMENT OF THE MAINTENANCE FEE TO THIS PATENT WAS UNINTENTIONAL

PETITIONER(S) REQUEST THAT THE DELAYED PAYMENT OF THE MAINTENANCE FEE BE ACCEPTED AND THE PATENT REINSTATED

THIS PORTION MUST BE COMPLETED BY THE SIGNATORY OR SIGNATORIES

37 CFR 1.378(d) states: "Any petition under this section must be signed by an attorney or agent registered to practice before the Patent and Trademark Office, or by the patentee, the assignee, or other party in interest."

I certify, in accordance with 37 CFR 1.4(d)(4) that I am

◉ An attorney or agent registered to practice before the Patent and Trademark Office

○ A sole patentee

○ A joint patentee; I certify that I am authorized to sign this submission on behalf of all the other patentees.

○ A joint patentee; all of whom are signing this e-petition

○ The assignee of record of the entire interest

Patent Practitioner			
A signature of the applicant or representative is required in accordance with 37 CFR 1.33 and 10.18. Please see 37 CFR 1.4(d) for the form of the signature			
Signature	/Kendal M. Sheets/	Date (YYYY-MM-DD)	2009-10-07
Name	Kendal M. Sheets	Registration Number	47077

This collection of information is required by 37 CFR 1.378(c). The information is required to obtain or retain a benefit by the public which is to file (and by the USPTO to process) an application. Confidentiality is governed by 35 U.S.C. 122 and 37 CFR 1.11 and 1.14. This collection is estimated to take 1 hour to complete, including gathering, preparing, and submitting the completed application form to the USPTO. Time will vary depending upon the individual case. Any comments on the amount of time you require to complete this form and/ or suggestions for reducing this burden, should be sent to the Chief Information Officer, U.S. Patent and Trademark Office, U.S. Department of Commerce, P.O. Box 1450, Alexandria, VA 22313-1450. DO NOT SEND FEES OR COMPLETED FORMS TO THIS ADDRESS. **This form can only be used when in conjunction with EFS-Web. If this form is mailed to the USPTO, it may cause delays in reinstating the patent.**

Privacy Act Statement

The Privacy Act of 1974 (P.L. 93-579) requires that you be given certain information in connection with your submission of the attached form related to a patent application or patent. Accordingly, pursuant to the requirements of the Act, please be advised that: (1) the general authority for the collection of this information is 35 U.S.C. 2(b)(2); (2) furnishing of the information solicited is voluntary; and (3) the principal purpose for which the information is used by the U.S. Patent and Trademark Office is to process and/or examine your submission related to a patent application or patent. If you do not furnish the requested information, the U.S. Patent and Trademark Office may not be able to process and/or examine your submission, which may result in termination of proceedings or abandonment of the application or expiration of the patent.

The information provided by you in this form will be subject to the following routine uses:

1. The information on this form will be treated confidentially to the extent allowed under the Freedom of Information Act (5 U.S.C. 552) and the Privacy Act (5 U.S.C. 552a). Records from this system of records may be disclosed to the Department of Justice to determine whether the Freedom of Information Act requires disclosure of these records.

2. A record from this system of records may be disclosed, as a routine use, in the course of presenting evidence to a court, magistrate, or administrative tribunal, including disclosures to opposing counsel in the course of settlement negotiations.

3. A record in this system of records may be disclosed, as a routine use, to a Member of Congress submitting a request involving an individual, to whom the record pertains, when the individual has requested assistance from the Member with respect to the subject matter of the record.

4. A record in this system of records may be disclosed, as a routine use, to a contractor of the Agency having need for the information in order to perform a contract. Recipients of information shall be required to comply with the requirements of the Privacy Act of 1974, as amended, pursuant to 5 U.S.C. 552a(m).

5. A record related to an International Application filed under the Patent Cooperation Treaty in this system of records may be disclosed, as a routine use, to the International Bureau of the World Intellectual Property Organization, pursuant to the Patent Cooperation Treaty.

6. A record in this system of records may be disclosed, as a routine use, to another federal agency for purposes of National Security review (35 U.S.C. 181) and for review pursuant to the Atomic Energy Act (42 U.S.C. 218(c)).

7. A record from this system of records may be disclosed, as a routine use, to the Administrator, General Services, or his/her designee, during an inspection of records conducted by GSA as part of that agency's responsibility to recommend improvements in records management practices and programs, under authority of 44 U.S.C. 2904 and 2906. Such disclosure shall be made in accordance with the GSA regulations governing inspection of records for this purpose, and any other relevant (i.e., GSA or Commerce) directive. Such disclosure shall not be used to make determinations about individuals.

8. A record from this system of records may be disclosed, as a routine use, to the public after either publication of the application pursuant to 35 U.S.C. 122(b) or issuance of a patent pursuant to 35 U.S.C. 151. Further, a record may be disclosed, subject to the limitations of 37 CFR 1.14, as a routine use, to the public if the record was filed in an application which became abandoned or in which the proceedings were terminated and which application is referenced by either a published application, an application open to public inspections or an issued patent.

9. A record from this system of records may be disclosed, as a routine use, to a Federal, State, or local law enforcement agency, if the USPTO becomes aware of a violation or potential violation of law or regulation.

UNITED STATES PATENT AND TRADEMARK OFFICE

Commissioner for Patents
United States Patent and Trademark Office
P.O. Box 1450
Alexandria, VA 22313-1450
www.uspto.gov

In re Patent No. 5665461
Issue Date: September 9,1997
Application No. 07945176
Filed: September 15,1992
Attorney Docket No. HY026

:
:DECISION GRANTING PETITION
:UNDER 37 CFR 1.378(c)
:

This is a decision on the electronic petition, filed October 7,2009 ,under 37 CFR 1.378(c) to accept the unintentionally delayed payment of the 11.5 year maintenance fee for the above-identified patent.

The petition is **GRANTED**.

The maintenance fee is accepted, and the above-identified patent reinstated as of October 7,2009 . This decision also constitutes notice that the fee has been accepted. An electronic copy of the petition and this decision has been created as an entry in the Image File Wrapper. Nevertheless, petitioner should print and retain an independent copy.

Telephone inquiries related to this electronic decision should be directed to the Electronic Business Center at 1-866-217-9197.

Under the Paperwork Reduction Act of 1995, no persons are required to respond to a collection of information unless it displays valid OMB control number.

PETITION TO ACCEPT UNINTENTIONALLY DELAYED PAYMENT OF MAINTENANCE FEE IN AN EXPIRED PATENT (37 CFR 1.378(c))

Patent Number	Issue Date (YYYY-MM-DD)	Application Number	Filing Date (YYYY-MM-DD)	Docket Number (if applicable)
5296973	1994-03-22	07945502	1992-09-16	DWB-3

CAUTION: Maintenance fee (and surcharge, if any) payment must correctly identify: (1) the patent number and (2) the application number of the actual U.S. application leading to issuance of that patent to ensure the fee(s) is/are associated with the correct patent. 37 CFR 1.366(c) and (d).

SMALL ENTITY
☒ Patentee claims, or has previously claimed, small entity status. See 37 CFR 1.27.

LOSS OF ENTITLEMENT TO SMALL ENTITY STATUS
☐ Patentee is no longer entitled to small entity status. See 37 CFR 1.27(g)

NOT Small Entity			Small Entity		
	Fee	Code		Fee	Code
○	3 ½ year	(1551)	○	3 ½ year	(2551)
○	7 ½ year	(1552)	○	7 ½ year	(2552)
○	11 ½ year	(1553)	◉	11 ½ year	(2553)

SURCHARGE
The surcharge required by 37 CFR 1.20(i)(2) (Fee Code 1558) must be paid as a condition of accepting unintentionally delayed payment of the maintenance fee.

MAINTENANCE FEE (37 CFR 1.20(e)-(g))
The appropriate maintenance fee must be submitted with this petition.

STATEMENT
THE UNDERSIGNED CERTIFIES THAT THE DELAY IN PAYMENT OF THE MAINTENANCE FEE TO THIS PATENT WAS UNINTENTIONAL

PETITIONER(S) REQUEST THAT THE DELAYED PAYMENT OF THE MAINTENANCE FEE BE ACCEPTED AND THE PATENT REINSTATED

THIS PORTION MUST BE COMPLETED BY THE SIGNATORY OR SIGNATORIES

37 CFR 1.378(d) states: "Any petition under this section must be signed by an attorney or agent registered to practice before the Patent and Trademark Office, or by the patentee, the assignee, or other party in interest."

I certify, in accordance with 37 CFR 1.4(d)(4) that I am

◉ An attorney or agent registered to practice before the Patent and Trademark Office

○ A sole patentee

○ A joint patentee; I certify that I am authorized to sign this submission on behalf of all the other patentees.

○ A joint patentee; all of whom are signing this e-petition

○ The assignee of record of the entire interest

Patent Practitioner			
A signature of the applicant or representative is required in accordance with 37 CFR 1.33 and 10.18. Please see 37 CFR 1.4(d) for the form of the signature			
Signature	/Robert L Farris/	Date (YYYY-MM-DD)	2007-03-21
Name	Robert L. Farris	Registration Number	25112

This collection of information is required by 37 CFR 1.378(c). The information is required to obtain or retain a benefit by the public which is to file (and by the USPTO to process) an application. Confidentiality is governed by 35 U.S.C. 122 and 37 CFR 1.11 and 1.14. This collection is estimated to take 1 hour to complete, including gathering, preparing, and submitting the completed application form to the USPTO. Time will vary depending upon the individual case. Any comments on the amount of time you require to complete this form and/ or suggestions for reducing this burden, should be sent to the Chief Information Officer, U.S. Patent and Trademark Office, U.S. Department of Commerce, P.O. Box 1450, Alexandria, VA 22313-1450. DO NOT SEND FEES OR COMPLETED FORMS TO THIS ADDRESS. **This form can only be used when in conjunction with EFS-Web. If this form is mailed to the USPTO, it may cause delays in reinstating the patent.**

Privacy Act Statement

The Privacy Act of 1974 (P.L. 93-579) requires that you be given certain information in connection with your submission of the attached form related to a patent application or patent. Accordingly, pursuant to the requirements of the Act, please be advised that: (1) the general authority for the collection of this information is 35 U.S.C. 2(b)(2); (2) furnishing of the information solicited is voluntary; and (3) the principal purpose for which the information is used by the U.S. Patent and Trademark Office is to process and/or examine your submission related to a patent application or patent. If you do not furnish the requested information, the U.S. Patent and Trademark Office may not be able to process and/or examine your submission, which may result in termination of proceedings or abandonment of the application or expiration of the patent.

The information provided by you in this form will be subject to the following routine uses:

1. The information on this form will be treated confidentially to the extent allowed under the Freedom of Information Act (5 U.S.C. 552) and the Privacy Act (5 U.S.C. 552a). Records from this system of records may be disclosed to the Department of Justice to determine whether the Freedom of Information Act requires disclosure of these record s.

2. A record from this system of records may be disclosed, as a routine use, in the course of presenting evidence to a court, magistrate, or administrative tribunal, including disclosures to opposing counsel in the course of settlement negotiations.

3. A record in this system of records may be disclosed, as a routine use, to a Member of Congress submitting a request involving an individual, to whom the record pertains, when the individual has requested assistance from the Member with respect to the subject matter of the record.

4. A record in this system of records may be disclosed, as a routine use, to a contractor of the Agency having need for the information in order to perform a contract. Recipients of information shall be required to comply with the requirements of the Privacy Act of 1974, as amended, pursuant to 5 U.S.C. 552a(m).

5. A record related to an International Application filed under the Patent Cooperation Treaty in this system of records may be disclosed, as a routine use, to the International Bureau of the World Intellectual Property Organization, pursuant to the Patent Cooperation Treaty.

6. A record in this system of records may be disclosed, as a routine use, to another federal agency for purposes of National Security review (35 U.S.C. 181) and for review pursuant to the Atomic Energy Act (42 U.S.C. 218(c)).

7. A record from this system of records may be disclosed, as a routine use, to the Administrator, General Services, or his/her designee, during an inspection of records conducted by GSA as part of that agency's responsibility to recommend improvements in records management practices and programs, under authority of 44 U.S.C. 2904 and 2906. Such disclosure shall be made in accordance with the GSA regulations governing inspection of records for this purpose, and any other relevant (i.e., GSA or Commerce) directive. Such disclosure shall not be used to make determinations about individuals.

8. A record from this system of records may be disclosed, as a routine use, to the public after either publication of the application pursuant to 35 U.S.C. 122(b) or issuance of a patent pursuant to 35 U.S.C. 151. Further, a record may be disclosed, subject to the limitations of 37 CFR 1.14, as a routine use, to the public if the record was filed in an application which became abandoned or in which the proceedings were terminated and which application is referenced by either a published application, an application open to public inspections or an issued patent.

9. A record from this system of records may be disclosed, as a routine use, to a Federal, State, or local law enforcement agency, if the USPTO becomes aware of a violation or potential violation of law or regulation.

UNITED STATES PATENT AND TRADEMARK OFFICE

Commissioner for Patents
United States Patent and Trademark Office
P.O. Box 1450
Alexandria, VA 22313-1450
www.uspto.gov

In re Patent No. 5296973
Issue Date: March 22,1994
Application No. 07945502
Filed: September 16,1992
Attorney Docket No. DWB-3

:
:DECISION GRANTING PETITION
:UNDER 37 CFR 1.378(c)
:

This is a decision on the electronic petition, filed March 21,2007 ,under 37 CFR 1.378(c) to accept the unintentionally delayed payment of the 11.5 year maintenance fee for the above-identified patent.

The petition is GRANTED.

The maintenance fee is accepted, and the above-identified patent reinstated as of March 21,2007 . This decision also constitutes notice that the fee has been accepted. An electronic copy of the petition and this decision has been created as an entry in an Image File Wrapper. Nevertheless, petitioner should print and retain an independent copy

Telephone inquires related to this electronic decision should be directed to the Electronic Business Center at 1-866-217-9197.

UNITED STATES PATENT AND TRADEMARK OFFICE

COMMISSIONER FOR PATENTS
UNITED STATES PATENT AND TRADEMARK OFFICE
WASHINGTON, D.C. 20231
www.uspto.gov

Paper No. 14

Arnold S. Weintraub
38505 Woodward, Ste. 3000
Bloomfield Hills, MI 48304

COPY MAILED

DEC 0 6 2002

OFFICE OF PETITIONS

In re Patent No. 5,349,153 :
Issue Date: September 20, 1994 :
Application No. 07/952,051 : ON PETITION
Filed: September 28, 1992 :
Patentee: Bryan Prucher :

This is a decision on the petition under 37 CFR 1.378(c), filed November 26, 2002, to accept the unintentionally delayed payment of a maintenance fee for the above-identified patent.

The petition is **GRANTED**.

The maintenance fee is hereby accepted and the above-identified patent is reinstated as of the mail date of this decision.

Petitioner is advised that he will not receive future correspondence related to maintenance fees for the above-identified patent unless a "fee address" (see PTO/SB/47) is submitted for the above-identified patent.

Telephone inquiries concerning this decision should be directed to the undersigned at (703) 306-5594.

The patent file is being forwarded to Files Repository.

Retta Williams

Retta Williams
Petitions Examiner
Office of Petitions
Office of the Deputy Commissioner
for Patent Examination Policy

UNITED STATES PATENT AND TRADEMARK OFFICE

Commissioner for Patents
United States Patent and Trademark Office
Washington, D.C. 20231
www.uspto.gov

COPY MAILED Paper No. 20

DEC 0 7 2000

**OFFICE OF PETITIONS
A/C PATENTS**

OLE K. NILSSEN
408 CAESAR DRIVE
BARRINGTON, IL 60010

In re Application of
Ole K Nilssen
Application No. 07/952,303
Filed: October 2, 1989

ON PETITION

This is a decision on the petition filed November 14, 2000, under 37 CFR 1.137(a) to revive the above-identified application. The petition is being treated as a petition to withdraw the holding of abandonment under 37 CFR 1.181.

The petition is **GRANTED**.

This application became abandoned for failure to timely pay the issue fee due by July 26, 200. This application became abandoned on July 27, 2000. Accordingly, a Notice of Abandonment was mailed on October 23, 2000.

Petitioner alleges non receipt of the Notice of Allowance mailed April 26, 2000 and indicates that the wrong address is being used on communications mailed from the USPTO. A review of the record reveals that a transposition error has ocurred and that communications from the USPTO have been sent to a non-existent address in New Jersey instead of to petitioner's address in Illinois. Additionally, the Notice of Allowance and Notice of Allowability mailed April 26, 2000 have been returned by the United States Postal Service indicating that an insufficient address was provided.

In view thereof, it can be concluded that the Notice of Allowance and Notice of Allowability were inadvertently mailed to the wrong address and the application was mistakenly abandoned.

As such, since the abandonment is being withdrawn, the petition filed November 14, 2000 along with the fee of $110.00 is unnecessary. Petitioner may request a refund pursuant to 37 CFR 1.26 by writing to the Office of Finance, Refund Section. A copy of this decision should accompany petitioner's request.

This file is being forwarded to Technology Center 2800 for a remailing of the Notice of Allowance and Notice of Allowability.

Telephone inquiries concerning this matter may be directed to Petitions Attorney Patricia Faison-Ball in the Office of Petitions at (703) 305-4497.

Patricia Faison-Ball

Patricia Faison-Ball
Petitions Attorney
Office of Petitions
Office of the Deputy Commissioner
for Patent Examination Policy

Beverly M. Flanagan

Beverly M. Flanagan
Supervisory Petitions Examiner
Office of Petitions
Office of the Deputy Commissioner
for Patent Examination Policy

UNITED STATES PATENT AND TRADEMARK OFFICE

Commissioner for Patents
United States Patent and Trademark Office
P.O. Box 1450
Alexandria, VA 22313-1450
www.uspto.gov

Paper No. 24

OLE K NILSSEN
408 CAESAR DRIVE
BARRINGTON, IL 60010

COPY MAILED
AUG 01 2006
OFFICE OF PETITIONS

In re Patent No. 6,229,718	:	
Issued: May 8, 2001	:	
Application No. 07/952,303	:	NOTICE
Filed: October 2, 1989	:	
For: PARALLEL-RESONANT BRIDGE	:	
INVERTER	:	

This is in response to the paper filed June 27, 2006 under 37 CFR 1.28(g)(2) requesting that status as a Small Entity be removed.

In view of the request referenced above, status as a Small Entity has been removed.

This file is being forwarded to Files Repository.

ALESIA M. BROWN
Petitions Attorney
Office of Petitions

UNITED STATES PATENT AND TRADEMARK OFFICE

Commissioner for Patents
United States Patent and Trademark Office
P.O. Box 1450
Alexandria, VA 22313-1450
www.uspto.gov

In re Patent No. 5628781
Issue Date: May 13,1997
Application No. 07953474
Filed: September 29,1992
Attorney Docket No. TJU-0559

:

:DECISION GRANTING PETITION
:UNDER 37 CFR 1.378(c)

:

This is a decision on the electronic petition, filed July 23,2009 ,under 37 CFR 1.378(c) to accept the unintentionally delayed payment of the 11.5 year maintenance fee for the above-identified patent.

The petition is **GRANTED**.

The maintenance fee is accepted, and the above-identified patent reinstated as of July 23,2009 . This decision also constitutes notice that the fee has been accepted. An electronic copy of the petition and this decision has been created as an entry in the Image File Wrapper. Nevertheless, petitioner should print and retain an independent copy.

Telephone inquiries related to this electronic decision should be directed to the Electronic Business Center at 1-866-217-9197.

PTO/SB/66 (03-09)
Approved for use through 03/31/2012. OMB 0651-0016
U.S. Patent and Trademark Office: U.S. DEPARTMENT OF COMMERCE
Under the Paperwork Reduction Act of 1995, no persons are required to respond to a collection of information unless it displays valid OMB control number.

PETITION TO ACCEPT UNINTENTIONALLY DELAYED PAYMENT OF MAINTENANCE FEE IN AN EXPIRED PATENT (37 CFR 1.378(c))

Patent Number	Issue Date (YYYY-MM-DD)	Application Number	Filing Date (YYYY-MM-DD)	Docket Number (if applicable)
5628781	1997-05-13	07953474	1992-09-29	TJU-0559

CAUTION: Maintenance fee (and surcharge, if any) payment must correctly identify: (1) the patent number and (2) the application number of the actual U.S. application leading to issuance of that patent to ensure the fee(s) is/are associated with the correct patent. 37 CFR 1.366(c) and (d).

SMALL ENTITY
☒ Patentee claims, or has previously claimed, small entity status. See 37 CFR 1.27.

LOSS OF ENTITLEMENT TO SMALL ENTITY STATUS
☐ Patentee is no longer entitled to small entity status. See 37 CFR 1.27(g)

NOT Small Entity			Small Entity		
	Fee	Code		Fee	Code
○	3 ½ year	(1551)	○	3 ½ year	(2551)
○	7 ½ year	(1552)	○	7 ½ year	(2552)
○	11 ½ year	(1553)	◉	11 ½ year	(2553)

SURCHARGE
The surcharge required by 37 CFR 1.20(i)(2) (Fee Code 1558) must be paid as a condition of accepting unintentionally delayed payment of the maintenance fee.

MAINTENANCE FEE (37 CFR 1.20(e)-(g))
The appropriate maintenance fee must be submitted with this petition.

STATEMENT
THE UNDERSIGNED CERTIFIES THAT THE DELAY IN PAYMENT OF THE MAINTENANCE FEE TO THIS PATENT WAS UNINTENTIONAL

PETITIONER(S) REQUEST THAT THE DELAYED PAYMENT OF THE MAINTENANCE FEE BE ACCEPTED AND THE PATENT REINSTATED

THIS PORTION MUST BE COMPLETED BY THE SIGNATORY OR SIGNATORIES

37 CFR 1.378(d) states: "Any petition under this section must be signed by an attorney or agent registered to practice before the Patent and Trademark Office, or by the patentee, the assignee, or other party in interest."

I certify, in accordance with 37 CFR 1.4(d)(4) that I am

◉ An attorney or agent registered to practice before the Patent and Trademark Office

○ A sole patentee

○ A joint patentee; I certify that I am authorized to sign this submission on behalf of all the other patentees.

○ A joint patentee; all of whom are signing this e-petition

○ The assignee of record of the entire interest

Patent Practitioner			
A signature of the applicant or representative is required in accordance with 37 CFR 1.33 and 10.18. Please see 37 CFR 1.4(d) for the form of the signature			
Signature	/Mark DeLuca, Reg. No. 33,229/	Date (YYYY-MM-DD)	2009-07-23
Name	Mark DeLuca	Registration Number	33229

This collection of information is required by 37 CFR 1.378(c). The information is required to obtain or retain a benefit by the public which is to file (and by the USPTO to process) an application. Confidentiality is governed by 35 U.S.C. 122 and 37 CFR 1.11 and 1.14. This collection is estimated to take 1 hour to complete, including gathering, preparing, and submitting the completed application form to the USPTO. Time will vary depending upon the individual case. Any comments on the amount of time you require to complete this form and/ or suggestions for reducing this burden, should be sent to the Chief Information Officer, U.S. Patent and Trademark Office, U.S. Department of Commerce, P.O. Box 1450, Alexandria, VA 22313-1450. DO NOT SEND FEES OR COMPLETED FORMS TO THIS ADDRESS. **This form can only be used when in conjunction with EFS-Web. If this form is mailed to the USPTO, it may cause delays in reinstating the patent.**

Privacy Act Statement

The Privacy Act of 1974 (P.L. 93-579) requires that you be given certain information in connection with your submission of the attached form related to a patent application or patent. Accordingly, pursuant to the requirements of the Act, please be advised that: (1) the general authority for the collection of this information is 35 U.S.C. 2(b)(2); (2) furnishing of the information solicited is voluntary; and (3) the principal purpose for which the information is used by the U.S. Patent and Trademark Office is to process and/or examine your submission related to a patent application or patent. If you do not furnish the requested information, the U.S. Patent and Trademark Office may not be able to process and/or examine your submission, which may result in termination of proceedings or abandonment of the application or expiration of the patent.

The information provided by you in this form will be subject to the following routine uses:

1. The information on this form will be treated confidentially to the extent allowed under the Freedom of Information Act (5 U.S.C. 552) and the Privacy Act (5 U.S.C. 552a). Records from this system of records may be disclosed to the Department of Justice to determine whether the Freedom of Information Act requires disclosure of these records.

2. A record from this system of records may be disclosed, as a routine use, in the course of presenting evidence to a court, magistrate, or administrative tribunal, including disclosures to opposing counsel in the course of settlement negotiations.

3. A record in this system of records may be disclosed, as a routine use, to a Member of Congress submitting a request involving an individual, to whom the record pertains, when the individual has requested assistance from the Member with respect to the subject matter of the record.

4. A record in this system of records may be disclosed, as a routine use, to a contractor of the Agency having need for the information in order to perform a contract. Recipients of information shall be required to comply with the requirements of the Privacy Act of 1974, as amended, pursuant to 5 U.S.C. 552a(m).

5. A record related to an International Application filed under the Patent Cooperation Treaty in this system of records may be disclosed, as a routine use, to the International Bureau of the World Intellectual Property Organization, pursuant to the Patent Cooperation Treaty.

6. A record in this system of records may be disclosed, as a routine use, to another federal agency for purposes of National Security review (35 U.S.C. 181) and for review pursuant to the Atomic Energy Act (42 U.S.C. 218(c)).

7. A record from this system of records may be disclosed, as a routine use, to the Administrator, General Services, or his/her designee, during an inspection of records conducted by GSA as part of that agency's responsibility to recommend improvements in records management practices and programs, under authority of 44 U.S.C. 2904 and 2906. Such disclosure shall be made in accordance with the GSA regulations governing inspection of records for this purpose, and any other relevant (i.e., GSA or Commerce) directive. Such disclosure shall not be used to make determinations about individuals.

8. A record from this system of records may be disclosed, as a routine use, to the public after either publication of the application pursuant to 35 U.S.C. 122(b) or issuance of a patent pursuant to 35 U.S.C. 151. Further, a record may be disclosed, subject to the limitations of 37 CFR 1.14, as a routine use, to the public if the record was filed in an application which became abandoned or in which the proceedings were terminated and which application is referenced by either a published application, an application open to public inspections or an issued patent.

9. A record from this system of records may be disclosed, as a routine use, to a Federal, State, or local law enforcement agency, if the USPTO becomes aware of a violation or potential violation of law or regulation.

UNITED STATES PATENT AND TRADEMARK OFFICE

Commissioner for Patents
United States Patent and Trademark Office

P.O. Box 1450
Alexandria, VA 22313-1450
www.uspto.gov

THOMAS A. GALLAGHER
Intellectual Property Law
100 Green Street, 3RD Floor
San Francisco, CA. 94111-1302

MAILED

MAR 30 2009

OFFICE OF PETITIONS

In re Patent No. 5,347,314	:	
Issue Date: September 12, 1994	:	
Application No. 07/954,382	:	DECISION ON PETITION
Filed: September 30, 1992	:	
Inventor: Yves C. Faroudja et al	:	

This is a corrected decision on the renewed petition filed October 7, 2008, requesting reconsideration pursuant to 37 CFR § 1.183. The petition is being properly treated as a petition under 37 CFR §1.182 to invalidate an assignment previously recorded against the above-identified patent. The decision mailed October 24, 2008, granting this renewed petition, has been reevaluated and is **VACATED.**

The petition under 37 CFR § 1.182 is **dismissed**.

Any reply must be submitted within TWO MONTHS from the mail date of this decision. Extensions of time under 37 CFR § 1.136(a) are permitted. This is not a final agency action within the meaning of 5 U.S.C. § 704.

Petitioner has requested that the assignment record be amended to reflect that petitioner is the true owner of the above-noted patent. In particular petitioner requests expungement of purportedly erroneous assignment documents at Reel 020817, Frame 0243, so that petitioner Yves C. Faroudja, may be identified as the true and correct owner of the '314 patent. Petitioner submits that the assignment submitted on April 9, 2008 was submitted with an improper document attached and therefore request expungement of the assignment.

As discussed in section 323.01(d) of the Manual of Patent Examining Procedure (MPEP), petitions to correct, modify or "expunge" assignment records are granted only if the petitioner can prove that:

(A) the normal corrective procedures outlined in MPEP § 323.01(a) through § 323.01(c) will not provide the petitioner with adequate relief; and
(B) the integrity of the assignment records will not be affected by granting the petition.

Petitioner has not proven either item A or B.

In regard to item A, there is no evidence of record that petitioner has attempted or considered any of the corrective procedures outlined in MPEP § 323.01(a) through § 323.01(c). Also, there is no explanation of record as to why none of these procedures would provide adequate relief.

Petitioner seeks an extraordinary remedy, properly addressed under 37 CFR § 1.182. The USPTO will not normally resort to an extraordinary remedy under 37 CFR § 1.182 if the rules of practice and the procedures before the USPTO already provide an avenue for the requested relief. See Cantello v. Rasmussen, 220 USPQ 664, (Comm'r Pats. 1982).

As background, the USPTO simply acts in a ministerial capacity in recording documents that have been submitted for recordation. See 35 USC 261 and 37 CFR § 3.11. However, the recording of a document pursuant to 37 CFR § 3.11 is **not** a determination by the USPTO of the validity of the document *per se* or the effect that document has on the title to a patent or application. See 37 CFR § 3.54. Moreover, it is USPTO policy to maintain a complete history of claimed interests in a given property, and, as such, a recorded assignment document will be retained, even if it is subsequently found to be invalid. In re Raney, 24 USPQ2d 1713 (Comm'r Pat. 1992).

As set forth in MPEP 323, an error in a recorded assignment is not corrected by invalidating the previous document, but by simply submitting a "corrective document". The "corrective document" must include 1) a copy of the original assignment document with the corrections made therein. The corrections must be initialed and dated by the party conveying the interest; and 2) a new Recordation Form Cover Sheet (form PTO-1595). The new recordation form cover sheet must identify the submission as a "corrective document" submission and indicate the reel and frame number where the incorrectly recorded assignment document appears. The person signing the new recordation form cover sheet must state that the information provided on the new cover sheet is true and correct and that any copy submitted is a true copy of the original document. The original cover sheet should be submitted with the corrective document. The corrective document will be recorded and given a new reel and frame number and recording date. The recording fee set forth in 37 CFR 1.21(h) is required for each patent application and patent against which the corrective document is being recorded. See MPEP § 302.06. Corrections may be made on the original assignment document, for example, by lining out an incorrect patent or application number in a merger or change of name (see MPEP § 314).

Therefore, the rules of practice and the procedures before the USPTO provide an avenue for the requested relief without relying upon extraordinary measures. As a request for the Office to invalidate an assignment is both extraordinary and contrary to USPTO policy, this petition must be dismissed.

In regard to item B, the statements submitted in support of the petition to expunge fails to establish that expungement will not affect the assignment records in this instance. The assignment recorded in the USPTO assignment records indicates that Faroudja Laboratories, Inc. has some rights with regard to the above mentioned patent, which suggests that the recordation

may have been proper. Petitioner should note that recordation is available for numerous documents related to a patent, not just the assignment of the entire right, title and interest in the patent. See at least MPEP § 313. Moreover, the USPTO does not determine the extent of rights transferred by the assignment papers or any recorded document. Such a determination is made by a court of relevant jurisdiction. No evidence is of record establishing that the assignment was recorded improperly. Absent sufficient evidence to support the requested expungement, the integrity of the assignment records will not be disturbed by the USPTO.

There is no indication that the person signing the petition was ever given a power of attorney or authorization of agent to prosecute the application. If the person signing the petition desires to receive future correspondence regarding this application, the appropriate power of attorney or authorization of agent must be submitted. A courtesy copy of this decision is being mailed to the person signing the petition; however, all future correspondence will be directed to the address currently of record until appropriate instructions are received.

Telephone inquiries concerning this communication should be directed to the undersigned at (571)272-0602.

Thurman K. Page
Petitions Examiner
Office of Petitions

cc: Michael J. Ferrazaro
P.O. Box 1687
Cupertino, CA 95015-1687

UNITED STATES PATENT AND TRADEMARK OFFICE

COMMISSIONER FOR PATENTS
UNITED STATES PATENT AND TRADEMARK OFFICE
P.O. BOX 1450
ALEXANDRIA, VA 22313-1450
www.uspto.gov

Paper No. 18

OLE K NILSSEN
200 N . HARRISON STREET
SUITE 103
ALGONQUIN, IL 60102

COPY MAILED

FEB 10 2006

OFFICE OF PETITIONS

In re Patent No. 5,233,270	:	
Issue Date: August 3, 1993	:	
Application No. 07/955,229	:	NOTICE
Filed: October 1, 1992	:	
Patentee: Ole K. Nilssen	:	

This is a notice regarding your request for acceptance of a fee deficiency submission under 37 CFR 1.28. On September 1, 1998, the Court of Appeals for the Federal Circuit held that 37 CFR 1.28(c) is the sole provision governing the time for correction of the erroneous payment of the issue fee as a small entity. **See DH Technology v. Synergystex International, Inc. 154 F.3d 1333, 47 USPQ2d 1865 (Fed. Cir. Sept. 1, 1998).**

The Office no longer investigates or rejects original or reissue applications under 37 CFR 1.56. **1098 Off. Gaz. Pat. Office 502 (January 3, 1989)**. Therefore, nothing in this Notice is intended to imply that an investigation was done.

Your fee deficiency submission under 37 CFR 1.28 is hereby **ACCEPTED**.

Inquiries related to this communication should be directed to the Office of Petitions Staff at (571) 272-3201.

This file is being returned to the Files Repository.

Sherry D. Brinkley
Petitions Examiner
Office of Petitions
Office of the Deputy Commissioner
for Patent Examination Policy

UNITED STATES PATENT AND TRADEMARK OFFICE

Commissioner for Patents
United States Patent and Trademark Office
P.O. Box 1450
Alexandria, VA 22313-1450
www.uspto.gov

JUN 14 2005

TOWNSEND AND TOWNSEND AND CREW, LLP
TWO EMBARCADERO CENTER
EIGHTH FLOOR
SAN FRANCISCO CA 94111-3834

In re Application of:
George H. Lowell
Serial No.: 07/958,426
Filed: October 8, 1992
Attorney Docket No.: 92-95

DECISION ON PETITION TO WITHDRAW THE HOLDING OF ABANDONMENT

This is in response to applicant's petition under 37 CFR. § 1.181 filed on April 15, 2005, requesting withdrawal of the holding of abandonment based on non-receipt of an Office communication and to restore the application to a pending status.

A review of the file history shows that the Office mailed a Notice of Allowance and Fee(s) due, setting a three-month statutory time period for payment, to applicants on March 23, 2004. A notice of Abandonment was mailed to applicant on March 28, 2005. Applicant states that no other communication from the PTO was sent to the correspondence address of record between the payment of the Issue Fee and the Notice of Abandonment. A review of the file history shows that the Office mailed a letter to applicant on February 4, 2005 withdrawing the application from issue. Applicant indicates that this letter was never received. Applicant's point is well taken as is clear from the record that the letter of February 4, 2005 was sent to an incorrect correspondence address. In view of this error, this application is restored to pending status with the mailing date of this decision.

Applicant's petition is **GRANTED**.

This application will be forwarded to the examiner for prompt mailing of a new letter.

Should there be any questions about this decision, please contact Marianne C. Seidel by letter addressed to Director, TC 1600, at the address listed above, or by telephone at 571-272-0584 or by facsimile at 703-872-9306.

Marianne C. Seidel for

Jasemine Chambers
Director, Technology Center 1600

SPE RESPONSE FOR CERTIFICATE OF CORRECTION

Paper No.: _____

DATE : 7-21-08

TO SPE OF : ART UNIT 1645

SUBJECT : ~~Request for Certificate of Correction for~~ Appl. No.: 07/908,126 Patent No.: 7112332

Please respond to this request for a certificate of correction within 7 days.

Please review the requested changes/corrections as shown in the **COCIN** document(s) in the IFW application image. No new matter should be introduced, nor should the scope or meaning of the claims be changed.

Should Claims be Approved.

Please complete the response (see below) and forward the completed response to scanning using document code **COCX**.

E. Yank

Certificates of Correction Branch

703-308-9390 ext. 117

Thank You For Your Assistance

The request for issuing the above-identified correction(s) is hereby:

Note your decision on the appropriate box.

- ☒ **Approved** — All changes apply.
- ☐ **Approved in Part** — Specify below which changes **do not** apply.
- ☐ **Denied** — State the reasons for denial below.

Comments: _____

ROBERT MONDESI

~~SUPERVISORY PATENT EXAMINER~~

SPE

1645

Art Unit

Under the Paperwork Reduction Act of 1995, no persons are required to respond to a collection of information unless it displays valid OMB control number.

PETITION TO ACCEPT UNINTENTIONALLY DELAYED PAYMENT OF MAINTENANCE FEE IN AN EXPIRED PATENT (37 CFR 1.378(c))

Patent Number	Issue Date (YYYY-MM-DD)	Application Number	Filing Date (YYYY-MM-DD)	Docket Number (if applicable)
5,286,875	1994-02-15	07/960,776	1992-10-14	

CAUTION: Maintenance fee (and surcharge, if any) payment must correctly identify: (1) the patent number and (2) the application number of the actual U.S. application leading to issuance of that patent to ensure the fee(s) is/are associated with the correct patent. 37 CFR 1.366(c) and (d).

SMALL ENTITY
☐ Patentee claims, or has previously claimed, small entity status. See 37 CFR 1.27.

LOSS OF ENTITLEMENT TO SMALL ENTITY STATUS
☐ Patentee is no longer entitled to small entity status. See 37 CFR 1.27(g)

NOT Small Entity		Small Entity	
Fee	Code	Fee	Code
○ 3 ½ year	(1551)	○ 3 ½ year	(2551)
○ 7 ½ year	(1552)	○ 7 ½ year	(2552)
◉ 11 ½ year	(1553)	○ 11 ½ year	(2553)

SURCHARGE
The surcharge required by 37 CFR 1.20(i)(2) (Fee Code 1558) must be paid as a condition of accepting unintentionally delayed payment of the maintenance fee.

MAINTENANCE FEE (37 CFR 1.20(e)-(g))
The appropriate maintenance fee must be submitted with this petition.

STATEMENT
THE UNDERSIGNED CERTIFIES THAT THE DELAY IN PAYMENT OF THE MAINTENANCE FEE TO THIS PATENT WAS UNINTENTIONAL

PETITIONER(S) REQUEST THAT THE DELAYED PAYMENT OF THE MAINTENANCE FEE BE ACCEPTED AND THE PATENT REINSTATED

THIS PORTION MUST BE COMPLETED BY THE SIGNATORY OR SIGNATORIES

37 CFR 1.378(d) states: "Any petition under this section must be signed by an attorney or agent registered to practice before the Patent and Trademark Office, or by the patentee, the assignee, or other party in interest."

I certify, in accordance with 37 CFR 1.4(d)(4) that I am

◉ An attorney or agent registered to practice before the Patent and Trademark Office

○ A sole patentee

○ A joint patentee; I certify that I am authorized to sign this submission on behalf of all the other patentees.

○ A joint patentee; all of whom are signing this e-petition

○ The assignee of record of the entire interest

Patent Practitioner			
A signature of the applicant or representative is required in accordance with 37 CFR 1.33 and 10.18. Please see 37 CFR 1.4(d) for the form of the signature			
Signature	/Craig M. BELL/	Date (YYYY-MM-DD)	2008-01-30
Name	Craig M. Bell	Registration Number	31812

This collection of information is required by 37 CFR 1.378(c). The information is required to obtain or retain a benefit by the public which is to file (and by the USPTO to process) an application. Confidentiality is governed by 35 U.S.C. 122 and 37 CFR 1.11 and 1.14. This collection is estimated to take 1 hour to complete, including gathering, preparing, and submitting the completed application form to the USPTO. Time will vary depending upon the individual case. Any comments on the amount of time you require to complete this form and/ or suggestions for reducing this burden, should be sent to the Chief Information Officer, U.S. Patent and Trademark Office, U.S. Department of Commerce, P.O. Box 1450, Alexandria, VA 22313-1450. DO NOT SEND FEES OR COMPLETED FORMS TO THIS ADDRESS. **This form can only be used when in conjunction with EFS-Web. If this form is mailed to the USPTO, it may cause delays in reinstating the patent.**

Privacy Act Statement

The Privacy Act of 1974 (P.L. 93-579) requires that you be given certain information in connection with your submission of the attached form related to a patent application or patent. Accordingly, pursuant to the requirements of the Act, please be advised that: (1) the general authority for the collection of this information is 35 U.S.C. 2(b)(2); (2) furnishing of the information solicited is voluntary; and (3) the principal purpose for which the information is used by the U.S. Patent and Trademark Office is to process and/or examine your submission related to a patent application or patent. If you do not furnish the requested information, the U.S. Patent and Trademark Office may not be able to process and/or examine your submission, which may result in termination of proceedings or abandonment of the application or expiration of the patent.

The information provided by you in this form will be subject to the following routine uses:

1. The information on this form will be treated confidentially to the extent allowed under the Freedom of Information Act (5 U.S.C. 552) and the Privacy Act (5 U.S.C. 552a). Records from this system of records may be disclosed to the Department of Justice to determine whether the Freedom of Information Act requires disclosure of these record s.

2. A record from this system of records may be disclosed, as a routine use, in the course of presenting evidence to a court, magistrate, or administrative tribunal, including disclosures to opposing counsel in the course of settlement negotiations.

3. A record in this system of records may be disclosed, as a routine use, to a Member of Congress submitting a request involving an individual, to whom the record pertains, when the individual has requested assistance from the Member with respect to the subject matter of the record.

4. A record in this system of records may be disclosed, as a routine use, to a contractor of the Agency having need for the information in order to perform a contract. Recipients of information shall be required to comply with the requirements of the Privacy Act of 1974, as amended, pursuant to 5 U.S.C. 552a(m).

5. A record related to an International Application filed under the Patent Cooperation Treaty in this system of records may be disclosed, as a routine use, to the International Bureau of the World Intellectual Property Organization, pursuant to the Patent Cooperation Treaty.

6. A record in this system of records may be disclosed, as a routine use, to another federal agency for purposes of National Security review (35 U.S.C. 181) and for review pursuant to the Atomic Energy Act (42 U.S.C. 218(c)).

7. A record from this system of records may be disclosed, as a routine use, to the Administrator, General Services, or his/her designee, during an inspection of records conducted by GSA as part of that agency's responsibility to recommend improvements in records management practices and programs, under authority of 44 U.S.C. 2904 and 2906. Such disclosure shall be made in accordance with the GSA regulations governing inspection of records for this purpose, and any other relevant (i.e., GSA or Commerce) directive. Such disclosure shall not be used to make determinations about individuals.

8. A record from this system of records may be disclosed, as a routine use, to the public after either publication of the application pursuant to 35 U.S.C. 122(b) or issuance of a patent pursuant to 35 U.S.C. 151. Further, a record may be disclosed, subject to the limitations of 37 CFR 1.14, as a routine use, to the public if the record was filed in an application which became abandoned or in which the proceedings were terminated and which application is referenced by either a published application, an application open to public inspections or an issued patent.

9. A record from this system of records may be disclosed, as a routine use, to a Federal, State, or local law enforcement agency, if the USPTO becomes aware of a violation or potential violation of law or regulation.

UNITED STATES PATENT AND TRADEMARK OFFICE

Commissioner for Patents
United States Patent and Trademark Office
P.O. Box 1450
Alexandria, VA 22313-1450
www.uspto.gov

In re Patent No. 5286875
Issue Date: February 15,1994
Application No. 07960776
Filed: October 14,1992
Attorney Docket No. OZ-42.762

:
:DECISION GRANTING PETITION
:UNDER 37 CFR 1.378(c)
:

This is a decision on the electronic petition, filed January 30,2008 ,under 37 CFR 1.378(c) to accept the unintentionally delayed payment of the 11.5 year maintenance fee for the above-identified patent.

The petition is GRANTED.

The maintenance fee is accepted, and the above-identified patent reinstated as of January 30,2008 . This decision also constitutes notice that the fee has been accepted. An electronic copy of the petition and this decision has been created as an entry in an Image File Wrapper. Nevertheless, petitioner should print and retain an independent copy

Telephone inquires related to this electronic decision should be directed to the Electronic Business Center at 1-866-217-9197.

Under the Paperwork Reduction Act of 1995, no persons are required to respond to a collection of information unless it displays valid OMB control number.

PETITION TO ACCEPT UNINTENTIONALLY DELAYED PAYMENT OF MAINTENANCE FEE IN AN EXPIRED PATENT (37 CFR 1.378(c))

Patent Number	Issue Date (YYYY-MM-DD)	Application Number	Filing Date (YYYY-MM-DD)	Docket Number (if applicable)
5436272	1995-07-25	07962175	1992-10-15	BBC184USC2

CAUTION: Maintenance fee (and surcharge, if any) payment must correctly identify: (1) the patent number and (2) the application number of the actual U.S. application leading to issuance of that patent to ensure the fee(s) is/are associated with the correct patent. 37 CFR 1.366(c) and (d).

SMALL ENTITY
☐ Patentee claims, or has previously claimed, small entity status. See 37 CFR 1.27.

LOSS OF ENTITLEMENT TO SMALL ENTITY STATUS
☐ Patentee is no longer entitled to small entity status. See 37 CFR 1.27(g)

NOT Small Entity		Small Entity	
Fee	Code	Fee	Code
○ 3 ½ year	(1551)	○ 3 ½ year	(2551)
○ 7 ½ year	(1552)	○ 7 ½ year	(2552)
◉ 11 ½ year	(1553)	○ 11 ½ year	(2553)

SURCHARGE
The surcharge required by 37 CFR 1.20(i)(2) (Fee Code 1558) must be paid as a condition of accepting unintentionally delayed payment of the maintenance fee.

MAINTENANCE FEE (37 CFR 1.20(e)-(g))
The appropriate maintenance fee must be submitted with this petition.

STATEMENT
THE UNDERSIGNED CERTIFIES THAT THE DELAY IN PAYMENT OF THE MAINTENANCE FEE TO THIS PATENT WAS UNINTENTIONAL

PETITIONER(S) REQUEST THAT THE DELAYED PAYMENT OF THE MAINTENANCE FEE BE ACCEPTED AND THE PATENT REINSTATED

THIS PORTION MUST BE COMPLETED BY THE SIGNATORY OR SIGNATORIES

37 CFR 1.378(d) states: "Any petition under this section must be signed by an attorney or agent registered to practice before the Patent and Trademark Office, or by the patentee, the assignee, or other party in interest."

I certify, in accordance with 37 CFR 1.4(d)(4) that I am

◉ An attorney or agent registered to practice before the Patent and Trademark Office

○ A sole patentee

○ A joint patentee; I certify that I am authorized to sign this submission on behalf of all the other patentees.

○ A joint patentee; all of whom are signing this e-petition

○ The assignee of record of the entire interest

Patent Practitioner			
A signature of the applicant or representative is required in accordance with 37 CFR 1.33 and 10.18. Please see 37 CFR 1.4(d) for the form of the signature			
Signature	/Andrew M. Parial/	Date (YYYY-MM-DD)	2008-05-21
Name	Andrew M. Parial	Registration Number	50382

This collection of information is required by 37 CFR 1.378(c). The information is required to obtain or retain a benefit by the public which is to file (and by the USPTO to process) an application. Confidentiality is governed by 35 U.S.C. 122 and 37 CFR 1.11 and 1.14. This collection is estimated to take 1 hour to complete, including gathering, preparing, and submitting the completed application form to the USPTO. Time will vary depending upon the individual case. Any comments on the amount of time you require to complete this form and/ or suggestions for reducing this burden, should be sent to the Chief Information Officer, U.S. Patent and Trademark Office, U.S. Department of Commerce, P.O. Box 1450, Alexandria, VA 22313-1450. DO NOT SEND FEES OR COMPLETED FORMS TO THIS ADDRESS. **This form can only be used when in conjunction with EFS-Web. If this form is mailed to the USPTO, it may cause delays in reinstating the patent.**

Privacy Act Statement

The Privacy Act of 1974 (P.L. 93-579) requires that you be given certain information in connection with your submission of the attached form related to a patent application or patent. Accordingly, pursuant to the requirements of the Act, please be advised that: (1) the general authority for the collection of this information is 35 U.S.C. 2(b)(2); (2) furnishing of the information solicited is voluntary; and (3) the principal purpose for which the information is used by the U.S. Patent and Trademark Office is to process and/or examine your submission related to a patent application or patent. If you do not furnish the requested information, the U.S. Patent and Trademark Office may not be able to process and/or examine your submission, which may result in termination of proceedings or abandonment of the application or expiration of the patent.

The information provided by you in this form will be subject to the following routine uses:

1. The information on this form will be treated confidentially to the extent allowed under the Freedom of Information Act (5 U.S.C. 552) and the Privacy Act (5 U.S.C. 552a). Records from this system of records may be disclosed to the Department of Justice to determine whether the Freedom of Information Act requires disclosure of these record s.

2. A record from this system of records may be disclosed, as a routine use, in the course of presenting evidence to a court, magistrate, or administrative tribunal, including disclosures to opposing counsel in the course of settlement negotiations.

3. A record in this system of records may be disclosed, as a routine use, to a Member of Congress submitting a request involving an individual, to whom the record pertains, when the individual has requested assistance from the Member with respect to the subject matter of the record.

4. A record in this system of records may be disclosed, as a routine use, to a contractor of the Agency having need for the information in order to perform a contract. Recipients of information shall be required to comply with the requirements of the Privacy Act of 1974, as amended, pursuant to 5 U.S.C. 552a(m).

5. A record related to an International Application filed under the Patent Cooperation Treaty in this system of records may be disclosed, as a routine use, to the International Bureau of the World Intellectual Property Organization, pursuant to the Patent Cooperation Treaty.

6. A record in this system of records may be disclosed, as a routine use, to another federal agency for purposes of National Security review (35 U.S.C. 181) and for review pursuant to the Atomic Energy Act (42 U.S.C. 218(c)).

7. A record from this system of records may be disclosed, as a routine use, to the Administrator, General Services, or his/her designee, during an inspection of records conducted by GSA as part of that agency's responsibility to recommend improvements in records management practices and programs, under authority of 44 U.S.C. 2904 and 2906. Such disclosure shall be made in accordance with the GSA regulations governing inspection of records for this purpose, and any other relevant (i.e., GSA or Commerce) directive. Such disclosure shall not be used to make determinations about individuals.

8. A record from this system of records may be disclosed, as a routine use, to the public after either publication of the application pursuant to 35 U.S.C. 122(b) or issuance of a patent pursuant to 35 U.S.C. 151. Further, a record may be disclosed, subject to the limitations of 37 CFR 1.14, as a routine use, to the public if the record was filed in an application which became abandoned or in which the proceedings were terminated and which application is referenced by either a published application, an application open to public inspections or an issued patent.

9. A record from this system of records may be disclosed, as a routine use, to a Federal, State, or local law enforcement agency, if the USPTO becomes aware of a violation or potential violation of law or regulation.

UNITED STATES PATENT AND TRADEMARK OFFICE

Commissioner for Patents
United States Patent and Trademark Office
P.O. Box 1450
Alexandria, VA 22313-1450
www.uspto.gov

In re Patent No. 5436272
Issue Date: July 25,1995
Application No. 07962175
Filed: October 15,1992
Attorney Docket No. P2025-0908-C

:
:DECISION GRANTING PETITION
:UNDER 37 CFR 1.378(c)
:

This is a decision on the electronic petition, filed May 21,2008 ,under 37 CFR 1.378(c) to accept the unintentionally delayed payment of the 11.5 year maintenance fee for the above-identified patent.

The petition is GRANTED.

The maintenance fee is accepted, and the above-identified patent reinstated as of May 21,2008 . This decision also constitutes notice that the fee has been accepted. An electronic copy of the petition and this decision has been created as an entry in an Image File Wrapper. Nevertheless, petitioner should print and retain an independent copy

Telephone inquires related to this electronic decision should be directed to the Electronic Business Center at 1-866-217-9197.

Approved for use through 04/30/2009. OMB 0651-0016
U.S. Patent and Trademark Office: U.S. DEPARTMENT OF COMMERCE
Under the Paperwork Reduction Act of 1995, no persons are required to respond to a collection of information unless it displays valid OMB control number.

PETITION TO ACCEPT UNINTENTIONALLY DELAYED PAYMENT OF MAINTENANCE FEE IN AN EXPIRED PATENT (37 CFR 1.378(c))

Patent Number	Issue Date (YYYY-MM-DD)	Application Number	Filing Date (YYYY-MM-DD)	Docket Number (if applicable)
5,365,578	1994-11-15	07/962,485	1992-10-15	913/47185/385

CAUTION: Maintenance fee (and surcharge, if any) payment must correctly identify: (1) the patent number and (2) the application number of the actual U.S. application leading to issuance of that patent to ensure the fee(s) is/are associated with the correct patent. 37 CFR 1.366(c) and (d).

SMALL ENTITY
☐ Patentee claims, or has previously claimed, small entity status. See 37 CFR 1.27.

LOSS OF ENTITLEMENT TO SMALL ENTITY STATUS
☐ Patentee is no longer entitled to small entity status. See 37 CFR 1.27(g)

NOT Small Entity			Small Entity		
	Fee	Code		Fee	Code
○	3 ½ year	(1551)	○	3 ½ year	(2551)
○	7 ½ year	(1552)	○	7 ½ year	(2552)
◉	11 ½ year	(1553)	○	11 ½ year	(2553)

SURCHARGE
The surcharge required by 37 CFR 1.20(i)(2) (Fee Code 1558) must be paid as a condition of accepting unintentionally delayed payment of the maintenance fee.

MAINTENANCE FEE (37 CFR 1.20(e)-(g))
The appropriate maintenance fee must be submitted with this petition.

STATEMENT
THE UNDERSIGNED CERTIFIES THAT THE DELAY IN PAYMENT OF THE MAINTENANCE FEE TO THIS PATENT WAS UNINTENTIONAL

PETITIONER(S) REQUEST THAT THE DELAYED PAYMENT OF THE MAINTENANCE FEE BE ACCEPTED AND THE PATENT REINSTATED

THIS PORTION MUST BE COMPLETED BY THE SIGNATORY OR SIGNATORIES

37 CFR 1.378(d) states: "Any petition under this section must be signed by an attorney or agent registered to practice before the Patent and Trademark Office, or by the patentee, the assignee, or other party in interest."

I certify, in accordance with 37 CFR 1.4(d)(4) that I am

◉ An attorney or agent registered to practice before the Patent and Trademark Office

○ A sole patentee

○ A joint patentee; I certify that I am authorized to sign this submission on behalf of all the other patentees.

○ A joint patentee; all of whom are signing this e-petition

○ The assignee of record of the entire interest

Patent Practitioner			
A signature of the applicant or representative is required in accordance with 37 CFR 1.33 and 10.18. Please see 37 CFR 1.4(d) for the form of the signature			
Signature	/Linda L. Palomar/	Date (YYYY-MM-DD)	2008-11-13
Name	Linda L. Palomar	Registration Number	37903

This collection of information is required by 37 CFR 1.378(c). The information is required to obtain or retain a benefit by the public which is to file (and by the USPTO to process) an application. Confidentiality is governed by 35 U.S.C. 122 and 37 CFR 1.11 and 1.14. This collection is estimated to take 1 hour to complete, including gathering, preparing, and submitting the completed application form to the USPTO. Time will vary depending upon the individual case. Any comments on the amount of time you require to complete this form and/ or suggestions for reducing this burden, should be sent to the Chief Information Officer, U.S. Patent and Trademark Office, U.S. Department of Commerce, P.O. Box 1450, Alexandria, VA 22313-1450. DO NOT SEND FEES OR COMPLETED FORMS TO THIS ADDRESS. **This form can only be used when in conjunction with EFS-Web. If this form is mailed to the USPTO, it may cause delays in reinstating the patent.**

Privacy Act Statement

The Privacy Act of 1974 (P.L. 93-579) requires that you be given certain information in connection with your submission of the attached form related to a patent application or patent. Accordingly, pursuant to the requirements of the Act, please be advised that: (1) the general authority for the collection of this information is 35 U.S.C. 2(b)(2); (2) furnishing of the information solicited is voluntary; and (3) the principal purpose for which the information is used by the U.S. Patent and Trademark Office is to process and/or examine your submission related to a patent application or patent. If you do not furnish the requested information, the U.S. Patent and Trademark Office may not be able to process and/or examine your submission, which may result in termination of proceedings or abandonment of the application or expiration of the patent.

The information provided by you in this form will be subject to the following routine uses:

1. The information on this form will be treated confidentially to the extent allowed under the Freedom of Information Act (5 U.S.C. 552) and the Privacy Act (5 U.S.C. 552a). Records from this system of records may be disclosed to the Department of Justice to determine whether the Freedom of Information Act requires disclosure of these record s.

2. A record from this system of records may be disclosed, as a routine use, in the course of presenting evidence to a court, magistrate, or administrative tribunal, including disclosures to opposing counsel in the course of settlement negotiations.

3. A record in this system of records may be disclosed, as a routine use, to a Member of Congress submitting a request involving an individual, to whom the record pertains, when the individual has requested assistance from the Member with respect to the subject matter of the record.

4. A record in this system of records may be disclosed, as a routine use, to a contractor of the Agency having need for the information in order to perform a contract. Recipients of information shall be required to comply with the requirements of the Privacy Act of 1974, as amended, pursuant to 5 U.S.C. 552a(m).

5. A record related to an International Application filed under the Patent Cooperation Treaty in this system of records may be disclosed, as a routine use, to the International Bureau of the World Intellectual Property Organization, pursuant to the Patent Cooperation Treaty.

6. A record in this system of records may be disclosed, as a routine use, to another federal agency for purposes of National Security review (35 U.S.C. 181) and for review pursuant to the Atomic Energy Act (42 U.S.C. 218(c)).

7. A record from this system of records may be disclosed, as a routine use, to the Administrator, General Services, or his/her designee, during an inspection of records conducted by GSA as part of that agency's responsibility to recommend improvements in records management practices and programs, under authority of 44 U.S.C. 2904 and 2906. Such disclosure shall be made in accordance with the GSA regulations governing inspection of records for this purpose, and any other relevant (i.e., GSA or Commerce) directive. Such disclosure shall not be used to make determinations about individuals.

8. A record from this system of records may be disclosed, as a routine use, to the public after either publication of the application pursuant to 35 U.S.C. 122(b) or issuance of a patent pursuant to 35 U.S.C. 151. Further, a record may be disclosed, subject to the limitations of 37 CFR 1.14, as a routine use, to the public if the record was filed in an application which became abandoned or in which the proceedings were terminated and which application is referenced by either a published application, an application open to public inspections or an issued patent.

9. A record from this system of records may be disclosed, as a routine use, to a Federal, State, or local law enforcement agency, if the USPTO becomes aware of a violation or potential violation of law or regulation.

UNITED STATES PATENT AND TRADEMARK OFFICE

Commissioner for Patents
United States Patent and Trademark Office
P.O. Box 1450
Alexandria, VA 22313-1450
www.uspto.gov

In re Patent No. 5365578
Issue Date: November 15,1994
Application No. 07962485
Filed: October 15,1992
Attorney Docket No. DM-115

:
:DECISION GRANTING PETITION
:UNDER 37 CFR 1.378(c)
:

This is a decision on the electronic petition, filed November 13,2008 ,under 37 CFR 1.378(c) to accept the unintentionally delayed payment of the 11.5 year maintenance fee for the above-identified patent.

The petition is **GRANTED**.

The maintenance fee is accepted, and the above-identified patent reinstated as of November 13,2008 . This decision also constitutes notice that the fee has been accepted. An electronic copy of the petition and this decision has been created as an entry in the Image File Wrapper. Nevertheless, petitioner should print and retain an independent copy.

Telephone inquiries related to this electronic decision should be directed to the Electronic Business Center at 1-866-217-9197.

Approved for use through 04/30/2009. OMB 0651-0016
U.S. Patent and Trademark Office: U.S. DEPARTMENT OF COMMERCE
Under the Paperwork Reduction Act of 1995, no persons are required to respond to a collection of information unless it displays valid OMB control number.

PETITION TO ACCEPT UNINTENTIONALLY DELAYED PAYMENT OF MAINTENANCE FEE IN AN EXPIRED PATENT (37 CFR 1.378(c))

Patent Number	Issue Date (YYYY-MM-DD)	Application Number	Filing Date (YYYY-MM-DD)	Docket Number (if applicable)
6018781	2000-01-25	07/963,041	1992-10-19	4912.01

CAUTION: Maintenance fee (and surcharge, if any) payment must correctly identify: (1) the patent number and (2) the application number of the actual U.S. application leading to issuance of that patent to ensure the fee(s) is/are associated with the correct patent. 37 CFR 1.366(c) and (d).

SMALL ENTITY
☐ Patentee claims, or has previously claimed, small entity status. See 37 CFR 1.27.

LOSS OF ENTITLEMENT TO SMALL ENTITY STATUS
☐ Patentee is no longer entitled to small entity status. See 37 CFR 1.27(g)

NOT Small Entity		Small Entity	
Fee	Code	Fee	Code
○ 3 ½ year	(1551)	○ 3 ½ year	(2551)
◉ 7 ½ year	(1552)	○ 7 ½ year	(2552)
○ 11 ½ year	(1553)	○ 11 ½ year	(2553)

SURCHARGE
The surcharge required by 37 CFR 1.20(i)(2) (Fee Code 1558) must be paid as a condition of accepting unintentionally delayed payment of the maintenance fee.

MAINTENANCE FEE (37 CFR 1.20(e)-(g))
The appropriate maintenance fee must be submitted with this petition.

STATEMENT
THE UNDERSIGNED CERTIFIES THAT THE DELAY IN PAYMENT OF THE MAINTENANCE FEE TO THIS PATENT WAS UNINTENTIONAL

PETITIONER(S) REQUEST THAT THE DELAYED PAYMENT OF THE MAINTENANCE FEE BE ACCEPTED AND THE PATENT REINSTATED

THIS PORTION MUST BE COMPLETED BY THE SIGNATORY OR SIGNATORIES

37 CFR 1.378(d) states: "Any petition under this section must be signed by an attorney or agent registered to practice before the Patent and Trademark Office, or by the patentee, the assignee, or other party in interest."

I certify, in accordance with 37 CFR 1.4(d)(4) that I am

◉ An attorney or agent registered to practice before the Patent and Trademark Office

○ A sole patentee

○ A joint patentee; I certify that I am authorized to sign this submission on behalf of all the other patentees.

○ A joint patentee; all of whom are signing this e-petition

○ The assignee of record of the entire interest

Patent Practitioner			
A signature of the applicant or representative is required in accordance with 37 CFR 1.33 and 10.18. Please see 37 CFR 1.4(d) for the form of the signature			
Signature	/AdamABennett/	Date (YYYY-MM-DD)	2008-12-16
Name	Adam A. Bennett	Registration Number	57849

This collection of information is required by 37 CFR 1.378(c). The information is required to obtain or retain a benefit by the public which is to file (and by the USPTO to process) an application. Confidentiality is governed by 35 U.S.C. 122 and 37 CFR 1.11 and 1.14. This collection is estimated to take 1 hour to complete, including gathering, preparing, and submitting the completed application form to the USPTO. Time will vary depending upon the individual case. Any comments on the amount of time you require to complete this form and/ or suggestions for reducing this burden, should be sent to the Chief Information Officer, U.S. Patent and Trademark Office, U.S. Department of Commerce, P.O. Box 1450, Alexandria, VA 22313-1450. DO NOT SEND FEES OR COMPLETED FORMS TO THIS ADDRESS. **This form can only be used when in conjunction with EFS-Web. If this form is mailed to the USPTO, it may cause delays in reinstating the patent.**

Privacy Act Statement

The Privacy Act of 1974 (P.L. 93-579) requires that you be given certain information in connection with your submission of the attached form related to a patent application or patent. Accordingly, pursuant to the requirements of the Act, please be advised that: (1) the general authority for the collection of this information is 35 U.S.C. 2(b)(2); (2) furnishing of the information solicited is voluntary; and (3) the principal purpose for which the information is used by the U.S. Patent and Trademark Office is to process and/or examine your submission related to a patent application or patent. If you do not furnish the requested information, the U.S. Patent and Trademark Office may not be able to process and/or examine your submission, which may result in termination of proceedings or abandonment of the application or expiration of the patent.

The information provided by you in this form will be subject to the following routine uses:

1. The information on this form will be treated confidentially to the extent allowed under the Freedom of Information Act (5 U.S.C. 552) and the Privacy Act (5 U.S.C. 552a). Records from this system of records may be disclosed to the Department of Justice to determine whether the Freedom of Information Act requires disclosure of these record s.

2. A record from this system of records may be disclosed, as a routine use, in the course of presenting evidence to a court, magistrate, or administrative tribunal, including disclosures to opposing counsel in the course of settlement negotiations.

3. A record in this system of records may be disclosed, as a routine use, to a Member of Congress submitting a request involving an individual, to whom the record pertains, when the individual has requested assistance from the Member with respect to the subject matter of the record.

4. A record in this system of records may be disclosed, as a routine use, to a contractor of the Agency having need for the information in order to perform a contract. Recipients of information shall be required to comply with the requirements of the Privacy Act of 1974, as amended, pursuant to 5 U.S.C. 552a(m).

5. A record related to an International Application filed under the Patent Cooperation Treaty in this system of records may be disclosed, as a routine use, to the International Bureau of the World Intellectual Property Organization, pursuant to the Patent Cooperation Treaty.

6. A record in this system of records may be disclosed, as a routine use, to another federal agency for purposes of National Security review (35 U.S.C. 181) and for review pursuant to the Atomic Energy Act (42 U.S.C. 218(c)).

7. A record from this system of records may be disclosed, as a routine use, to the Administrator, General Services, or his/her designee, during an inspection of records conducted by GSA as part of that agency's responsibility to recommend improvements in records management practices and programs, under authority of 44 U.S.C. 2904 and 2906. Such disclosure shall be made in accordance with the GSA regulations governing inspection of records for this purpose, and any other relevant (i.e., GSA or Commerce) directive. Such disclosure shall not be used to make determinations about individuals.

8. A record from this system of records may be disclosed, as a routine use, to the public after either publication of the application pursuant to 35 U.S.C. 122(b) or issuance of a patent pursuant to 35 U.S.C. 151. Further, a record may be disclosed, subject to the limitations of 37 CFR 1.14, as a routine use, to the public if the record was filed in an application which became abandoned or in which the proceedings were terminated and which application is referenced by either a published application, an application open to public inspections or an issued patent.

9. A record from this system of records may be disclosed, as a routine use, to a Federal, State, or local law enforcement agency, if the USPTO becomes aware of a violation or potential violation of law or regulation.

UNITED STATES PATENT AND TRADEMARK OFFICE

Commissioner for Patents
United States Patent and Trademark Office
P.O. Box 1450
Alexandria, VA 22313-1450
www.uspto.gov

In re Patent No. 6018781
Issue Date: January 25,2000
Application No. 07963041
Filed: October 19,1992
Attorney Docket No. 4912-A

:
:DECISION GRANTING PETITION
:UNDER 37 CFR 1.378(c)
:

This is a decision on the electronic petition, filed December 16,2008 ,under 37 CFR 1.378(c) to accept the unintentionally delayed payment of the 7.5 year maintenance fee for the above-identified patent.

The petition is **GRANTED**.

The maintenance fee is accepted, and the above-identified patent reinstated as of December 16,2008 . This decision also constitutes notice that the fee has been accepted. An electronic copy of the petition and this decision has been created as an entry in the Image File Wrapper. Nevertheless, petitioner should print and retain an independent copy.

Telephone inquiries related to this electronic decision should be directed to the Electronic Business Center at 1-866-217-9197.

Under the Paperwork Reduction Act of 1995, no persons are required to respond to a collection of information unless it displays valid OMB control number.

PETITION TO ACCEPT UNINTENTIONALLY DELAYED PAYMENT OF MAINTENANCE FEE IN AN EXPIRED PATENT (37 CFR 1.378(c))

Patent Number	Issue Date (YYYY-MM-DD)	Application Number	Filing Date (YYYY-MM-DD)	Docket Number (if applicable)
5,437,608	1995-08-01	07/963,285	1992-10-19	3311-132790

CAUTION: Maintenance fee (and surcharge, if any) payment must correctly identify: (1) the patent number and (2) the application number of the actual U.S. application leading to issuance of that patent to ensure the fee(s) is/are associated with the correct patent. 37 CFR 1.366(c) and (d).

SMALL ENTITY
☒ Patentee claims, or has previously claimed, small entity status. See 37 CFR 1.27.

LOSS OF ENTITLEMENT TO SMALL ENTITY STATUS
☐ Patentee is no longer entitled to small entity status. See 37 CFR 1.27(g)

NOT Small Entity			Small Entity		
	Fee	Code		Fee	Code
○	3 ½ year	(1551)	○	3 ½ year	(2551)
○	7 ½ year	(1552)	○	7 ½ year	(2552)
○	11 ½ year	(1553)	◉	11 ½ year	(2553)

SURCHARGE
The surcharge required by 37 CFR 1.20(i)(2) (Fee Code 1558) must be paid as a condition of accepting unintentionally delayed payment of the maintenance fee.

MAINTENANCE FEE (37 CFR 1.20(e)-(g))
The appropriate maintenance fee must be submitted with this petition.

STATEMENT
THE UNDERSIGNED CERTIFIES THAT THE DELAY IN PAYMENT OF THE MAINTENANCE FEE TO THIS PATENT WAS UNINTENTIONAL

PETITIONER(S) REQUEST THAT THE DELAYED PAYMENT OF THE MAINTENANCE FEE BE ACCEPTED AND THE PATENT REINSTATED

THIS PORTION MUST BE COMPLETED BY THE SIGNATORY OR SIGNATORIES

37 CFR 1.378(d) states: "Any petition under this section must be signed by an attorney or agent registered to practice before the Patent and Trademark Office, or by the patentee, the assignee, or other party in interest."

I certify, in accordance with 37 CFR 1.4(d)(4) that I am

◉ An attorney or agent registered to practice before the Patent and Trademark Office

○ A sole patentee

○ A joint patentee; I certify that I am authorized to sign this submission on behalf of all the other patentees.

○ A joint patentee; all of whom are signing this e-petition

○ The assignee of record of the entire interest

Patent Practitioner			
A signature of the applicant or representative is required in accordance with 37 CFR 1.33 and 10.18. Please see 37 CFR 1.4(d) for the form of the signature			
Signature	/Roy Kim/	Date (YYYY-MM-DD)	2008-04-16
Name	Roy Kim	Registration Number	51883

This collection of information is required by 37 CFR 1.378(c). The information is required to obtain or retain a benefit by the public which is to file (and by the USPTO to process) an application. Confidentiality is governed by 35 U.S.C. 122 and 37 CFR 1.11 and 1.14. This collection is estimated to take 1 hour to complete, including gathering, preparing, and submitting the completed application form to the USPTO. Time will vary depending upon the individual case. Any comments on the amount of time you require to complete this form and/ or suggestions for reducing this burden, should be sent to the Chief Information Officer, U.S. Patent and Trademark Office, U.S. Department of Commerce, P.O. Box 1450, Alexandria, VA 22313-1450. DO NOT SEND FEES OR COMPLETED FORMS TO THIS ADDRESS. **This form can only be used when in conjunction with EFS-Web. If this form is mailed to the USPTO, it may cause delays in reinstating the patent.**

Privacy Act Statement

The Privacy Act of 1974 (P.L. 93-579) requires that you be given certain information in connection with your submission of the attached form related to a patent application or patent. Accordingly, pursuant to the requirements of the Act, please be advised that: (1) the general authority for the collection of this information is 35 U.S.C. 2(b)(2); (2) furnishing of the information solicited is voluntary; and (3) the principal purpose for which the information is used by the U.S. Patent and Trademark Office is to process and/or examine your submission related to a patent application or patent. If you do not furnish the requested information, the U.S. Patent and Trademark Office may not be able to process and/or examine your submission, which may result in termination of proceedings or abandonment of the application or expiration of the patent.

The information provided by you in this form will be subject to the following routine uses:

1. The information on this form will be treated confidentially to the extent allowed under the Freedom of Information Act (5 U.S.C. 552) and the Privacy Act (5 U.S.C. 552a). Records from this system of records may be disclosed to the Department of Justice to determine whether the Freedom of Information Act requires disclosure of these record s.

2. A record from this system of records may be disclosed, as a routine use, in the course of presenting evidence to a court, magistrate, or administrative tribunal, including disclosures to opposing counsel in the course of settlement negotiations.

3. A record in this system of records may be disclosed, as a routine use, to a Member of Congress submitting a request involving an individual, to whom the record pertains, when the individual has requested assistance from the Member with respect to the subject matter of the record.

4. A record in this system of records may be disclosed, as a routine use, to a contractor of the Agency having need for the information in order to perform a contract. Recipients of information shall be required to comply with the requirements of the Privacy Act of 1974, as amended, pursuant to 5 U.S.C. 552a(m).

5. A record related to an International Application filed under the Patent Cooperation Treaty in this system of records may be disclosed, as a routine use, to the International Bureau of the World Intellectual Property Organization, pursuant to the Patent Cooperation Treaty.

6. A record in this system of records may be disclosed, as a routine use, to another federal agency for purposes of National Security review (35 U.S.C. 181) and for review pursuant to the Atomic Energy Act (42 U.S.C. 218(c)).

7. A record from this system of records may be disclosed, as a routine use, to the Administrator, General Services, or his/her designee, during an inspection of records conducted by GSA as part of that agency's responsibility to recommend improvements in records management practices and programs, under authority of 44 U.S.C. 2904 and 2906. Such disclosure shall be made in accordance with the GSA regulations governing inspection of records for this purpose, and any other relevant (i.e., GSA or Commerce) directive. Such disclosure shall not be used to make determinations about individuals.

8. A record from this system of records may be disclosed, as a routine use, to the public after either publication of the application pursuant to 35 U.S.C. 122(b) or issuance of a patent pursuant to 35 U.S.C. 151. Further, a record may be disclosed, subject to the limitations of 37 CFR 1.14, as a routine use, to the public if the record was filed in an application which became abandoned or in which the proceedings were terminated and which application is referenced by either a published application, an application open to public inspections or an issued patent.

9. A record from this system of records may be disclosed, as a routine use, to a Federal, State, or local law enforcement agency, if the USPTO becomes aware of a violation or potential violation of law or regulation.

UNITED STATES PATENT AND TRADEMARK OFFICE

Commissioner for Patents
United States Patent and Trademark Office
P.O. Box 1450
Alexandria, VA 22313-1450
www.uspto.gov

In re Patent No. 5437608
Issue Date: August 1,1995
Application No. 07963285
Filed: October 19,1992
Attorney Docket No. JB03-0003

:
:DECISION GRANTING PETITION
:UNDER 37 CFR 1.378(c)
:

This is a decision on the electronic petition, filed April 21,2008 ,under 37 CFR 1.378(c) to accept the unintentionally delayed payment of the 11.5 year maintenance fee for the above-identified patent.

The petition is GRANTED.

The maintenance fee is accepted, and the above-identified patent reinstated as of April 21,2008 . This decision also constitutes notice that the fee has been accepted. An electronic copy of the petition and this decision has been created as an entry in an Image File Wrapper. Nevertheless, petitioner should print and retain an independent copy

Telephone inquires related to this electronic decision should be directed to the Electronic Business Center at 1-866-217-9197.

UNITED STATES DEPARTMENT OF COMMERCE
Patent and Trademark Office
ASSISTANT SECRETARY AND COMMISSIONER OF PATENTS AND TRADEMARKS
Washington, D.C. 20231 DIW 03-00

Paper No. 13

COPY MAILED

APR 2 4 2000

SPECIAL PROGRAMS OFFICE
DAC FOR PATENTS

SHAHAN ISLAM
FRIEDMAN SIEGELBAUM, LLP
SEVEN BECKER FARM ROAD
ROSELAND, NJ 07068

In re Patent No. 5,405,368 :
Issue Date: 11 April, 1995 :
Application No. 07/964,210 : ON PETITION
Filed: 20 October, 1992 :
Attorney Docket No. 86134/103 :

This is a decision on the petition under 37 CFR 1.378(c)[1], filed on 13 January, 2000, to accept the unintentionally delayed payment of a maintenance fee for the above-identified patent.

The petition is **GRANTED.**

The patent issued on 11 April, 1995. The window for payment of the first maintenance fee installment with a surcharge closed on 12 April, 1999. Therefore, since this petition was filed within twenty-four (24) months of the six-month grace period provided in 37 CFR 1.362(e), this petition was timely filed under the provisions of 37 CFR 1.378(c).

Accordingly, the maintenance fee in this case is hereby accepted and the above-identified patent is hereby reinstated as of the mail date of this decision.

The statement of unintentional delay was not signed by a person who would have been in a position of knowing that the delay in paying the maintenance fee was unintentional. Nevertheless, in accordance with 37 CFR 10.18, the statement is

[1] 37 CFR 1.378(c) provides that a petition to accept an unintentionally delayed payment of a maintenance fee must be filed within twenty-four months of the six-month grace period provided in § 1.362(e) and must include:
(1) The required maintenance fee set forth in § 1.20(e) through (g);
(2) The surcharge set forth in § 1.20(l)(2); and
(3) A statement that the delay in payment of the maintenance fee was unintentional.

accepted as constituting a certification of unintentional delay. However, in the event that petitioner has no knowledge that the delay was in fact unintentional, petitioner should make a reasonable inquiry to ascertain that, in fact, the delay was unintentional. If petitioner discovers that the delay was intentional, petitioner must so notify the Office. If petitioner desires to receive future correspondence regarding any Maintenance Fee Reminder which **may** be mailed concerning this patent, a Fee Address should be submitted to Maintenance Fee Division.

This file is being returned to Files Repository.

Telephone inquiries concerning this matter may be directed to Petitions Attorney Douglas I. Wood, at (703)308-6918.

Karen Canaan for

Beverly M. Flanagan
Supervisory Petitions Examiner
Office of Petitions
Office of the Deputy Assistant Commissioner
for Patent Policy and Projects

Under the Paperwork Reduction Act of 1995, no persons are required to respond to a collection of information unless it displays valid OMB control number.

PETITION TO ACCEPT UNINTENTIONALLY DELAYED PAYMENT OF MAINTENANCE FEE IN AN EXPIRED PATENT (37 CFR 1.378(c))

Patent Number	Issue Date (YYYY-MM-DD)	Application Number	Filing Date (YYYY-MM-DD)	Docket Number (if applicable)
5402988	1995-04-04	07/964,444	1992-10-21	

CAUTION: Maintenance fee (and surcharge, if any) payment must correctly identify: (1) the patent number and (2) the application number of the actual U.S. application leading to issuance of that patent to ensure the fee(s) is/are associated with the correct patent. 37 CFR 1.366(c) and (d).

SMALL ENTITY
☒ Patentee claims, or has previously claimed, small entity status. See 37 CFR 1.27.

LOSS OF ENTITLEMENT TO SMALL ENTITY STATUS
☐ Patentee is no longer entitled to small entity status. See 37 CFR 1.27(g)

NOT Small Entity			Small Entity		
	Fee	Code		Fee	Code
○	3 ½ year	(1551)	○	3 ½ year	(2551)
○	7 ½ year	(1552)	○	7 ½ year	(2552)
○	11 ½ year	(1553)	◉	11 ½ year	(2553)

SURCHARGE
The surcharge required by 37 CFR 1.20(i)(2) (Fee Code 1558) must be paid as a condition of accepting unintentionally delayed payment of the maintenance fee.

MAINTENANCE FEE (37 CFR 1.20(e)-(g))
The appropriate maintenance fee must be submitted with this petition.

STATEMENT
THE UNDERSIGNED CERTIFIES THAT THE DELAY IN PAYMENT OF THE MAINTENANCE FEE TO THIS PATENT WAS UNINTENTIONAL

PETITIONER(S) REQUEST THAT THE DELAYED PAYMENT OF THE MAINTENANCE FEE BE ACCEPTED AND THE PATENT REINSTATED

THIS PORTION MUST BE COMPLETED BY THE SIGNATORY OR SIGNATORIES

37 CFR 1.378(d) states: "Any petition under this section must be signed by an attorney or agent registered to practice before the Patent and Trademark Office, or by the patentee, the assignee, or other party in interest."

I certify, in accordance with 37 CFR 1.4(d)(4) that I am

○ An attorney or agent registered to practice before the Patent and Trademark Office

◉ A sole patentee

○ A joint patentee; I certify that I am authorized to sign this submission on behalf of all the other patentees.

○ A joint patentee; all of whom are signing this e-petition

○ The assignee of record of the entire interest

Sole Patentee			
A signature of the applicant or representative is required in accordance with 37 CFR 1.33 and 10.18. Please see 37 CFR 1.4(d) for the form of the signature.			
Signature	/Stanley R. Eisele/	Date (YYYY-MM-DD)	2007-08-17
Name	Stanley R. Eisele		

This collection of information is required by 37 CFR 1.378(c). The information is required to obtain or retain a benefit by the public which is to file (and by the USPTO to process) an application. Confidentiality is governed by 35 U.S.C. 122 and 37 CFR 1.11 and 1.14. This collection is estimated to take 1 hour to complete, including gathering, preparing, and submitting the completed application form to the USPTO. Time will vary depending upon the individual case. Any comments on the amount of time you require to complete this form and/ or suggestions for reducing this burden, should be sent to the Chief Information Officer, U.S. Patent and Trademark Office, U.S. Department of Commerce, P.O. Box 1450, Alexandria, VA 22313-1450. DO NOT SEND FEES OR COMPLETED FORMS TO THIS ADDRESS. **This form can only be used when in conjunction with EFS-Web. If this form is mailed to the USPTO, it may cause delays in reinstating the patent.**

Privacy Act Statement

The Privacy Act of 1974 (P.L. 93-579) requires that you be given certain information in connection with your submission of the attached form related to a patent application or patent. Accordingly, pursuant to the requirements of the Act, please be advised that: (1) the general authority for the collection of this information is 35 U.S.C. 2(b)(2); (2) furnishing of the information solicited is voluntary; and (3) the principal purpose for which the information is used by the U.S. Patent and Trademark Office is to process and/or examine your submission related to a patent application or patent. If you do not furnish the requested information, the U.S. Patent and Trademark Office may not be able to process and/or examine your submission, which may result in termination of proceedings or abandonment of the application or expiration of the patent.

The information provided by you in this form will be subject to the following routine uses:

1. The information on this form will be treated confidentially to the extent allowed under the Freedom of Information Act (5 U.S.C. 552) and the Privacy Act (5 U.S.C. 552a). Records from this system of records may be disclosed to the Department of Justice to determine whether the Freedom of Information Act requires disclosure of these record s.

2. A record from this system of records may be disclosed, as a routine use, in the course of presenting evidence to a court, magistrate, or administrative tribunal, including disclosures to opposing counsel in the course of settlement negotiations.

3. A record in this system of records may be disclosed, as a routine use, to a Member of Congress submitting a request involving an individual, to whom the record pertains, when the individual has requested assistance from the Member with respect to the subject matter of the record.

4. A record in this system of records may be disclosed, as a routine use, to a contractor of the Agency having need for the information in order to perform a contract. Recipients of information shall be required to comply with the requirements of the Privacy Act of 1974, as amended, pursuant to 5 U.S.C. 552a(m).

5. A record related to an International Application filed under the Patent Cooperation Treaty in this system of records may be disclosed, as a routine use, to the International Bureau of the World Intellectual Property Organization, pursuant to the Patent Cooperation Treaty.

6. A record in this system of records may be disclosed, as a routine use, to another federal agency for purposes of National Security review (35 U.S.C. 181) and for review pursuant to the Atomic Energy Act (42 U.S.C. 218(c)).

7. A record from this system of records may be disclosed, as a routine use, to the Administrator, General Services, or his/her designee, during an inspection of records conducted by GSA as part of that agency's responsibility to recommend improvements in records management practices and programs, under authority of 44 U.S.C. 2904 and 2906. Such disclosure shall be made in accordance with the GSA regulations governing inspection of records for this purpose, and any other relevant (i.e., GSA or Commerce) directive. Such disclosure shall not be used to make determinations about individuals.

8. A record from this system of records may be disclosed, as a routine use, to the public after either publication of the application pursuant to 35 U.S.C. 122(b) or issuance of a patent pursuant to 35 U.S.C. 151. Further, a record may be disclosed, subject to the limitations of 37 CFR 1.14, as a routine use, to the public if the record was filed in an application which became abandoned or in which the proceedings were terminated and which application is referenced by either a published application, an application open to public inspections or an issued patent.

9. A record from this system of records may be disclosed, as a routine use, to a Federal, State, or local law enforcement agency, if the USPTO becomes aware of a violation or potential violation of law or regulation.

UNITED STATES PATENT AND TRADEMARK OFFICE

Commissioner for Patents
United States Patent and Trademark Office
P.O. Box 1450
Alexandria, VA 22313-1450
www.uspto.gov

In re Patent No. 5402988
Issue Date: April 4,1995
Application No. 07964444
Filed: October 21,1992
Attorney Docket No. SPE-101

:
:DECISION GRANTING PETITION
:UNDER 37 CFR 1.378(c)
:

This is a decision on the electronic petition, filed August 17,2007 ,under 37 CFR 1.378(c) to accept the unintentionally delayed payment of the 11.5 year maintenance fee for the above-identified patent.

The petition is GRANTED.

The maintenance fee is accepted, and the above-identified patent reinstated as of August 17,2007 . This decision also constitutes notice that the fee has been accepted. An electronic copy of the petition and this decision has been created as an entry in an Image File Wrapper. Nevertheless, petitioner should print and retain an independent copy

Telephone inquires related to this electronic decision should be directed to the Electronic Business Center at 1-866-217-9197.

Under the Paperwork Reduction Act of 1995, no persons are required to respond to a collection of information unless it displays valid OMB control number.

PETITION TO ACCEPT UNINTENTIONALLY DELAYED PAYMENT OF MAINTENANCE FEE IN AN EXPIRED PATENT (37 CFR 1.378(c))

Patent Number	Issue Date (YYYY-MM-DD)	Application Number	Filing Date (YYYY-MM-DD)	Docket Number (if applicable)
5464966	1995-11-07	07965947	1992-10-26	

CAUTION: Maintenance fee (and surcharge, if any) payment must correctly identify: (1) the patent number and (2) the application number of the actual U.S. application leading to issuance of that patent to ensure the fee(s) is/are associated with the correct patent. 37 CFR 1.366(c) and (d).

SMALL ENTITY
☐ Patentee claims, or has previously claimed, small entity status. See 37 CFR 1.27.

LOSS OF ENTITLEMENT TO SMALL ENTITY STATUS
☐ Patentee is no longer entitled to small entity status. See 37 CFR 1.27(g)

NOT Small Entity		Small Entity	
Fee	Code	Fee	Code
○ 3 ½ year	(1551)	○ 3 ½ year	(2551)
○ 7 ½ year	(1552)	○ 7 ½ year	(2552)
◉ 11 ½ year	(1553)	○ 11 ½ year	(2553)

SURCHARGE
The surcharge required by 37 CFR 1.20(i)(2) (Fee Code 1558) must be paid as a condition of accepting unintentionally delayed payment of the maintenance fee.

MAINTENANCE FEE (37 CFR 1.20(e)-(g))
The appropriate maintenance fee must be submitted with this petition.

STATEMENT
THE UNDERSIGNED CERTIFIES THAT THE DELAY IN PAYMENT OF THE MAINTENANCE FEE TO THIS PATENT WAS UNINTENTIONAL

PETITIONER(S) REQUEST THAT THE DELAYED PAYMENT OF THE MAINTENANCE FEE BE ACCEPTED AND THE PATENT REINSTATED

THIS PORTION MUST BE COMPLETED BY THE SIGNATORY OR SIGNATORIES

37 CFR 1.378(d) states: "Any petition under this section must be signed by an attorney or agent registered to practice before the Patent and Trademark Office, or by the patentee, the assignee, or other party in interest."

I certify, in accordance with 37 CFR 1.4(d)(4) that I am

◉ An attorney or agent registered to practice before the Patent and Trademark Office

○ A sole patentee

○ A joint patentee; I certify that I am authorized to sign this submission on behalf of all the other patentees.

○ A joint patentee; all of whom are signing this e-petition

○ The assignee of record of the entire interest

Patent Practitioner			
A signature of the applicant or representative is required in accordance with 37 CFR 1.33 and 10.18. Please see 37 CFR 1.4(d) for the form of the signature			
Signature	/Brenda L. Thomasson/	Date (YYYY-MM-DD)	2008-09-04
Name	Brenda L. Thomasson	Registration Number	00000

This collection of information is required by 37 CFR 1.378(c). The information is required to obtain or retain a benefit by the public which is to file (and by the USPTO to process) an application. Confidentiality is governed by 35 U.S.C. 122 and 37 CFR 1.11 and 1.14. This collection is estimated to take 1 hour to complete, including gathering, preparing, and submitting the completed application form to the USPTO. Time will vary depending upon the individual case. Any comments on the amount of time you require to complete this form and/ or suggestions for reducing this burden, should be sent to the Chief Information Officer, U.S. Patent and Trademark Office, U.S. Department of Commerce, P.O. Box 1450, Alexandria, VA 22313-1450. DO NOT SEND FEES OR COMPLETED FORMS TO THIS ADDRESS. **This form can only be used when in conjunction with EFS-Web. If this form is mailed to the USPTO, it may cause delays in reinstating the patent.**

Privacy Act Statement

The Privacy Act of 1974 (P.L. 93-579) requires that you be given certain information in connection with your submission of the attached form related to a patent application or patent. Accordingly, pursuant to the requirements of the Act, please be advised that: (1) the general authority for the collection of this information is 35 U.S.C. 2(b)(2); (2) furnishing of the information solicited is voluntary; and (3) the principal purpose for which the information is used by the U.S. Patent and Trademark Office is to process and/or examine your submission related to a patent application or patent. If you do not furnish the requested information, the U.S. Patent and Trademark Office may not be able to process and/or examine your submission, which may result in termination of proceedings or abandonment of the application or expiration of the patent.

The information provided by you in this form will be subject to the following routine uses:

1. The information on this form will be treated confidentially to the extent allowed under the Freedom of Information Act (5 U.S.C. 552) and the Privacy Act (5 U.S.C. 552a). Records from this system of records may be disclosed to the Department of Justice to determine whether the Freedom of Information Act requires disclosure of these record s.

2. A record from this system of records may be disclosed, as a routine use, in the course of presenting evidence to a court, magistrate, or administrative tribunal, including disclosures to opposing counsel in the course of settlement negotiations.

3. A record in this system of records may be disclosed, as a routine use, to a Member of Congress submitting a request involving an individual, to whom the record pertains, when the individual has requested assistance from the Member with respect to the subject matter of the record.

4. A record in this system of records may be disclosed, as a routine use, to a contractor of the Agency having need for the information in order to perform a contract. Recipients of information shall be required to comply with the requirements of the Privacy Act of 1974, as amended, pursuant to 5 U.S.C. 552a(m).

5. A record related to an International Application filed under the Patent Cooperation Treaty in this system of records may be disclosed, as a routine use, to the International Bureau of the World Intellectual Property Organization, pursuant to the Patent Cooperation Treaty.

6. A record in this system of records may be disclosed, as a routine use, to another federal agency for purposes of National Security review (35 U.S.C. 181) and for review pursuant to the Atomic Energy Act (42 U.S.C. 218(c)).

7. A record from this system of records may be disclosed, as a routine use, to the Administrator, General Services, or his/her designee, during an inspection of records conducted by GSA as part of that agency's responsibility to recommend improvements in records management practices and programs, under authority of 44 U.S.C. 2904 and 2906. Such disclosure shall be made in accordance with the GSA regulations governing inspection of records for this purpose, and any other relevant (i.e., GSA or Commerce) directive. Such disclosure shall not be used to make determinations about individuals.

8. A record from this system of records may be disclosed, as a routine use, to the public after either publication of the application pursuant to 35 U.S.C. 122(b) or issuance of a patent pursuant to 35 U.S.C. 151. Further, a record may be disclosed, subject to the limitations of 37 CFR 1.14, as a routine use, to the public if the record was filed in an application which became abandoned or in which the proceedings were terminated and which application is referenced by either a published application, an application open to public inspections or an issued patent.

9. A record from this system of records may be disclosed, as a routine use, to a Federal, State, or local law enforcement agency, if the USPTO becomes aware of a violation or potential violation of law or regulation.

UNITED STATES PATENT AND TRADEMARK OFFICE

Commissioner for Patents
United States Patent and Trademark Office
P.O. Box 1450
Alexandria, VA 22313-1450
www.uspto.gov

In re Patent No. 5464966
Issue Date: November 7,1995
Application No. 07965947
Filed: October 26,1992
Attorney Docket No. 1424-018

:
:DECISION GRANTING PETITION
:UNDER 37 CFR 1.378(c)
:

This is a decision on the electronic petition, filed September 4,2008 ,under 37 CFR 1.378(c) to accept the unintentionally delayed payment of the 11.5 year maintenance fee for the above-identified patent.

The petition is **GRANTED**.

The maintenance fee is accepted, and the above-identified patent reinstated as of September 4,2008 . This decision also constitutes notice that the fee has been accepted. An electronic copy of the petition and this decision has been created as an entry in the Image File Wrapper. Nevertheless, petitioner should print and retain an independent copy.

Telephone inquiries related to this electronic decision should be directed to the Electronic Business Center at 1-866-217-9197.

UNITED STATES PATENT AND TRADEMARK OFFICE

Commissioner for Patents
United States Patent and Trademark Office
P.O. Box 1450
Alexandria, VA 22313-1450
www.uspto.gov

Paper No.

WOODCOCK WASHBURN
ONE LIBERTY PLACE - 46TH FLOOR
PHILADELPHIA, PA 19103

COPY MAILED

JUL 2 0 2005

OFFICE OF PETITIONS

In re Application of	:	
Phillip D. Cook et al	:	
Application No. 07/967,267	:	ON PETITION
Filed: October 27, 1992	:	
Attorney Docket No. ISIS-0710	:	

This is a decision on the petition, filed July 19, 2005, under 37 CFR 1.313(c)(1) to withdraw the above-identified application from issue after payment of the issue fee.

The petition is **GRANTED**.

The above-identified application is withdrawn from issue due to unpatentability of one or more claims. See 37 CFR 1.313(c)(1).

The application is hereby withdrawn from issue.

Telephone inquiries should be directed to Wan Laymon at (571) 272-3220.

Upon receipt of the file in the Office of Petitions, the file will be forwarded to Technology Center AU 1623 for processing of the request for continued examination under 37 CFR 1.114 and for consideration of the concurrently filed Amendment.

Wan Laymon

Wan Laymon
Petitions Examiner
Office of Petitions
Office of the Deputy Commissioner
for Patent Examination Policy

SPE RESPONSE FOR CERTIFICATE OF CORRECTION

Paper No.: —

DATE : 10/24/06

TO SPE OF : ART UNIT 1623

SUBJECT : Request for Certificate of Correction for Appl. No.: 7967267 Patent No.: 7101993 B1

Please respond to this request for a certificate of correction within 7 days.

Please review the requested changes/corrections as shown in the **COCIN** document(s) in the IFW application image. No new matter should be introduced, nor should the scope or meaning of the claims be changed.

Please complete the response (see below) and forward the completed response to scanning using document code **COCX**.

Virginia Tolbert
Certificates of Correction Branch

703-308-9390 ext. 113

Thank You For Your Assistance

The request for issuing the above-identified correction(s) is hereby:
Note your decision on the appropriate box.

- ☒ **Approved** — **All** changes apply.
- ☐ **Approved in Part** — Specify below which changes **do not** apply.
- ☐ **Denied** — State the reasons for denial below.

Comments: _____

SPE

1623
Art Unit

PTO/SB/44 (04-05)
Approved for use through 04/30/2007. OMB 0651-0033
U.S. Patent and Trademark Office; U.S. DEPARTMENT OF COMMERCE
Under the Paperwork Reduction Act of 1995, no persons are required to respond to a collection of information unless it displays a valid OMB control number.
(Also Form PTO-1050)

UNITED STATES PATENT AND TRADEMARK OFFICE
CERTIFICATE OF CORRECTION

PATENT NO. : 7,101,993

APPLICATION NO.: 07/967,267

ISSUE DATE : 09/05/2006

INVENTOR(S) : Phillip Dan Cook

It is certified that an error appears or errors appear in the above-identified patent and that said Letters Patent is hereby corrected as shown below:

1) Title Page:
Item [63], Related U.S. Application Data, please delete

"Continuation-in-part of application No. 07/918,362, filed on Jul. 23, 1992, now Pat. No. 5,506,351, which is a continuation-in-part of application No. 07/463,358, filed on Jan. 11, 1990, now abandoned, which is a continuation-in-part of application No. 07/566,977, filed on Aug. 13, 1990, now abandoned"

and insert therefore

--Continuation-in-part of application No. 07/918,362, filed on Jul. 23, 1992, now Pat. No. 5,506,351, and application No. PCT/US91/00243, filed on Jan. 11, 1991, which is a continuation-in-part of application No. 07/566,977, filed on Aug. 13, 1990, now abandoned, and application No. 07/463,358, filed on Jan. 11, 1990, now abandoned--;

2) Page 2, OTHER PUBLICATION, "Robins" reference, please delete "2-aminoaldenosine" and insert therefore --2-aminoadenosine--;

3) Column 1, line 8, please insert --and Ser. No. US91/00243 filed on Jan, 11, 1991-- between "5,506,351" and "which";

4) Column 2, line 19, please delete "2-O-alkylated" and insert therefore --2'-O-alkylated--;

5) Column 5, line 22, please delete ".";

6) Column 9, line 5, please delete "NH_z" and insert therefore --NH_2--;

7) Column 9, line 5, please delete "($2NH_z$" and insert therefore --($2NH_2$--;

MAILING ADDRESS OF SENDER (Please do not use customer number below):

Isis Pharmaceuticals, Inc.
1896 Rutherford Rd.
Carlsbad, CA 92008

This collection of information is required by 37 CFR 1.322, 1.323, and 1.324. The information is required to obtain or retain a benefit by the public which is to file (and by the USPTO to process) an application. Confidentiality is governed by 35 U.S.C. 122 and 37 CFR 1.14. This collection is estimated to take 1.0 hour to complete, including gathering, preparing, and submitting the completed application form to the USPTO. Time will vary depending upon the individual case. Any comments on the amount of time you require to complete this form and/or suggestions for reducing this burden, should be sent to the Chief Information Officer, U.S. Patent and Trademark Office, U.S. Department of Commerce, P.O. Box 1450, Alexandria, VA 22313-1450. DO NOT SEND FEES OR COMPLETED FORMS TO THIS ADDRESS. SEND TO: **Attention Certificate of Corrections Branch, Commissioner for Patents, P.O. Box 1450, Alexandria, VA 22313-1450.**

If you need assistance in completing the form, call 1-800-PTO-9199 and select option 2.

PTO/SB/44 (04-05)
Approved for use through 04/30/2007. OMB 0651-0033
U.S. Patent and Trademark Office; U.S. DEPARTMENT OF COMMERCE
Under the Paperwork Reduction Act of 1995, no persons are required to respond to a collection of information unless it displays a valid OMB control number.
(Also Form PTO-1050)

UNITED STATES PATENT AND TRADEMARK OFFICE
CERTIFICATE OF CORRECTION

PATENT NO. : 7,101,993

APPLICATION NO.: 07/967,267

ISSUE DATE : 09/05/2006

INVENTOR(S) : Phillip Dan Cook

It is certified that an error appears or errors appear in the above-identified patent and that said Letters Patent is hereby corrected as shown below:

8) Column 9, line 8, please delete "N,N-diisopropylaminochlorophosphine" and insert therefore --N,N-diisopropyl aminochlorophosphine--;

9) Column 11, line 1, please delete "similarly" and insert therefore --Similarly--;

10) Column 13, line 44, please delete "$C_{13}H_{20}N_6O_4.½H_2O$: " and insert therefore --$C_{13}H_{20}N_6O_4 \cdot ½H_2O$:--;

11) Column 13, line 47, please delete "B";

12) Column 14, line 6, please delete "O-CH_2)" and insert therefore --O-C<u>H</u>$_2$)--;

13) Column 14, line 34, please delete "$C_{17}H_{25}N_5O_6.½H_2O$: " and insert therefore --$C_{17}H_{25}N_5O_6 \cdot ½H_2O$:--;

14) Column 14, line 48, please delete "CH_2Cl_2/2xdil" and insert therefore --CH_2Cl_2/2x dil--;

15) Column 14, line 57, please delete "$C_{38}H_{42}N_5O_8.H_2O$: " and insert therefore --$C_{38}H_{42}N_5O_8 \cdot H_2O$:--;

16) Column 16, line 26, please delete "$C_{40}H_{47}N_5O_8.½H_2O$: " and insert therefore --$C_{40}H_{47}N_5O_8 \cdot ½H_2O$:--;

17) Column 17, line 12, please delete "3'-O<u>H</u>5'-O<u>H</u>" and insert therefore --3'-O<u>H</u> 5'-O<u>H</u>--;

18) Column 17, line 30, please delete "C2" and insert therefore --C_2--;

MAILING ADDRESS OF SENDER (Please do not use customer number below):

Isis Pharmaceuticals, Inc.
1896 Rutherford Rd.
Carlsbad, CA 92008

This collection of information is required by 37 CFR 1.322, 1.323, and 1.324. The information is required to obtain or retain a benefit by the public which is to file (and by the USPTO to process) an application. Confidentiality is governed by 35 U.S.C. 122 and 37 CFR 1.14. This collection is estimated to take 1.0 hour to complete, including gathering, preparing, and submitting the completed application form to the USPTO. Time will vary depending upon the individual case. Any comments on the amount of time you require to complete this form and/or suggestions for reducing this burden, should be sent to the Chief Information Officer, U.S. Patent and Trademark Office, U.S. Department of Commerce, P.O. Box 1450, Alexandria, VA 22313-1450. DO NOT SEND FEES OR COMPLETED FORMS TO THIS ADDRESS. SEND TO: **Attention Certificate of Corrections Branch, Commissioner for Patents, P.O. Box 1450, Alexandria, VA 22313-1450.**

If you need assistance in completing the form, call 1-800-PTO-9199 and select option 2.

SEP 27 2006

PTO/SB/44 (04-05)
Approved for use through 04/30/2007. OMB 0651-0033
U.S. Patent and Trademark Office; U.S. DEPARTMENT OF COMMERCE
Under the Paperwork Reduction Act of 1995, no persons are required to respond to a collection of information unless it displays a valid OMB control number.
(Also Form PTO-1050)

UNITED STATES PATENT AND TRADEMARK OFFICE
CERTIFICATE OF CORRECTION

PATENT NO. : 7,101,993

APPLICATION NO.: 07/967,267

ISSUE DATE : 09/05/2006

INVENTOR(S) : Phillip Dan Cook

It is certified that an error appears or errors appear in the above-identified patent and that said Letters Patent is hereby corrected as shown below:

19) Column 18, line 9, please delete "^{1} H" and insert therefore --^{1}H--;

20) Column 18, line 20, please delete "D-ribo-furanosyl" and insert therefore --D-ribofuranosyl--;

21) Column 19, line 57, please delete "3'-OH)" and insert therefore --3'-O<u>H</u>)--;

22) Column 19, line 59, please delete "$C_{21}H_{22}N_6O_7.½H_2O$: " and insert therefore --$C_{21}H_{22}N_6O_7 \cdot ½H_2O$:--;

23) Column 20, line 9, please delete "$C_{25}H_{28}N_6O_8.½H_2O$: " and insert therefore --$C_{25}H_{28}N_6O_8 \cdot ½H_2O$:--;

24) Column 20, line 15, please delete "phthalimido)propylquanosine" and insert therefore --phthalimido)propylguanosine--;

25) Column 20, line 29, please delete "$C_{46}H_{46}N_6O_{10}.H_2O$: " and insert therefore --$C_{46}H_{46}N_6O_{10} \cdot H_2O$:--;

26) Column 20, line 45, please delete "N2-Dimethylaminomethylidene-5=-" and insert therefore --N2-Dimethylaminomethylidene-5'--;

27) Column 20, line 53, please delete "1xwith" and insert therefore --1x with--;

28) Column 20, line 65, please delete "$C_{45}H_{45}N_7O_9.½H_2O$: " and insert therefore --$C_{45}H_{45}N_7O_9 \cdot ½H_2O$:--;

MAILING ADDRESS OF SENDER (Please do not use customer number below):

Isis Pharmaceuticals, Inc.
1896 Rutherford Rd.
Carlsbad, CA 92008

This collection of information is required by 37 CFR 1.322, 1.323, and 1.324. The information is required to obtain or retain a benefit by the public which is to file (and by the USPTO to process) an application. Confidentiality is governed by 35 U.S.C. 122 and 37 CFR 1.14. This collection is estimated to take 1.0 hour to complete, including gathering, preparing, and submitting the completed application form to the USPTO. Time will vary depending upon the individual case. Any comments on the amount of time you require to complete this form and/or suggestions for reducing this burden, should be sent to the Chief Information Officer, U.S. Patent and Trademark Office, U.S. Department of Commerce, P.O. Box 1450, Alexandria, VA 22313-1450. DO NOT SEND FEES OR COMPLETED FORMS TO THIS ADDRESS. SEND TO: **Attention Certificate of Corrections Branch, Commissioner for Patents, P.O. Box 1450, Alexandria, VA 22313-1450.**

If you need assistance in completing the form, call 1-800-PTO-9199 and select option 2.

PTO/SB/44 (04-05)
Approved for use through 04/30/2007. OMB 0651-0033
U.S. Patent and Trademark Office; U.S. DEPARTMENT OF COMMERCE
Under the Paperwork Reduction Act of 1995, no persons are required to respond to a collection of information unless it displays a valid OMB control number.
(Also Form PTO-1050)

UNITED STATES PATENT AND TRADEMARK OFFICE
CERTIFICATE OF CORRECTION

PATENT NO. : 7,101,993

APPLICATION NO.: 07/967,267

ISSUE DATE : 09/05/2006

INVENTOR(S) : Phillip Dan Cook

It is certified that an error appears or errors appear in the above-identified patent and that said Letters Patent is hereby corrected as shown below:

29) Column 21, line 60, please delete "$C_{23}H_{26}N_6O_7.½H_2O$: " and insert therefore --$C_{23}H_{26}N_6O_7 \cdot ½H_2O$:--;

30) Column 22, line 3, please delete "2xwith" and insert therefore --2x with--;

31) Column 22, line 11, please delete "$C_{27}H_{32}N_6O_8.½H_2O$: " and insert therefore --$C_{27}H_{32}N_6O_8 \cdot ½H_2O$:--;

32) Column 22, line 31, please delete "$C_{48}H_5ON_6O_{10}.½H_2O$: " and insert therefore --$C_{48}H_{50}N_6O_{10} \cdot ½H_2O$:--;

33) Column 22, line 39, please delete "2,6-diamino-9-(□-D-ribo-furanosyl)" and insert therefore --2,6-diamino-9-(□-D-ribofuranosyl)--;

34) Column 22, line 48, please delete "$C_{22}H_{40}N_6O_5Si_2½H_2O$: " and insert therefore --$C_{22}H_{40}N_6O_5Si_2 \cdot ½H_2O$:--;

35) Column 23, line 16, please delete "$C_{11}H_{16}N_6O_4.½H_2O$: " and insert therefore --$C_{11}H_{16}N_6O_4 \cdot ½H_2O$: --;

36) Column 23, line 34, please delete "$C_{11}H_{15}N_5O_5.½H_2O$: " and insert therefore --$C_{11}N_{15}N_5O_5 \cdot ½H_2O$--;

37) Column 23, line 50, please delete "$C\underline{H}(C\underline{H}_3)_2]$" and insert therefore --$C\underline{H}(CH_3)_2]$--;

38) Column 24, line 6, please delete "N2-Isobutyryl-5'-dimethyoxytrityl-2'-O-methyl-guanosine" and insert therefore --N2-Isobutyryl-5'-dimethoxytrityl-2'-O-methylguanosine--;

MAILING ADDRESS OF SENDER (Please do not use customer number below):

Isis Pharmaceuticals, Inc.
1896 Rutherford Rd.
Carlsbad, CA 92008

This collection of information is required by 37 CFR 1.322, 1.323, and 1.324. The information is required to obtain or retain a benefit by the public which is to file (and by the USPTO to process) an application. Confidentiality is governed by 35 U.S.C. 122 and 37 CFR 1.14. This collection is estimated to take 1.0 hour to complete, including gathering, preparing, and submitting the completed application form to the USPTO. Time will vary depending upon the individual case. Any comments on the amount of time you require to complete this form and/or suggestions for reducing this burden, should be sent to the Chief Information Officer, U.S. Patent and Trademark Office, U.S. Department of Commerce, P.O. Box 1450, Alexandria, VA 22313-1450. DO NOT SEND FEES OR COMPLETED FORMS TO THIS ADDRESS. SEND TO: **Attention Certificate of Corrections Branch, Commissioner for Patents, P.O. Box 1450, Alexandria, VA 22313-1450.**

If you need assistance in completing the form, call 1-800-PTO-9199 and select option 2.

? 7 2006

PTO/SB/44 (04-05)
Approved for use through 04/30/2007. OMB 0651-0033
U.S. Patent and Trademark Office: U.S. DEPARTMENT OF COMMERCE
Under the Paperwork Reduction Act of 1995, no persons are required to respond to a collection of information unless it displays a valid OMB control number.
(Also Form PTO-1050)

UNITED STATES PATENT AND TRADEMARK OFFICE
CERTIFICATE OF CORRECTION

PATENT NO. : 7,101,993

APPLICATION NO.: 07/967,267

ISSUE DATE : 09/05/2006

INVENTOR(S) : Phillip Dan Cook

It is certified that an error appears or errors appear in the above-identified patent and that said Letters Patent is hereby corrected as shown below:

39) Column 24, line 16, please delete "D-ribo-furanosyl) " and insert therefore --D-ribofuranosyl)--;

40) Column 25, line 24, please delete "3'-OH5'-OH) " and insert therefore --3'-OH 5'-OH--;

41) Column 25, line 39, please delete "CH(CH_3)$_2$] " and insert therefore --CH(CH_3)$_2$]--;

42) Column 25, line 62, please delete "2, 6-diamino-9-[3-O-" and insert therefore --2,6-diamino-9-[3-O---;

43) Column 29, Claim 10, please insert --1-- between "claim" and "wherein";

44) Column 29, lines 17-27, please delete " 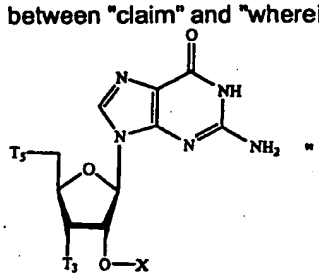 "

MAILING ADDRESS OF SENDER (Please do not use customer number below):

Isis Pharmaceuticals, Inc.
1896 Rutherford Rd.
Carlsbad, CA 92008

This collection of information is required by 37 CFR 1.322, 1.323, and 1.324. The information is required to obtain or retain a benefit by the public which is to file (and by the USPTO to process) an application. Confidentiality is governed by 35 U.S.C. 122 and 37 CFR 1.14. This collection is estimated to take 1.0 hour to complete, including gathering, preparing, and submitting the completed application form to the USPTO. Time will vary depending upon the individual case. Any comments on the amount of time you require to complete this form and/or suggestions for reducing this burden, should be sent to the Chief Information Officer, U.S. Patent and Trademark Office, U.S. Department of Commerce, P.O. Box 1450, Alexandria, VA 22313-1450. DO NOT SEND FEES OR COMPLETED FORMS TO THIS ADDRESS. SEND TO: **Attention Certificate of Corrections Branch, Commissioner for Patents, P.O. Box 1450, Alexandria, VA 22313-1450.**

If you need assistance in completing the form, call 1-800-PTO-9199 and select option 2.

SEP 2 7 2006

PTO/SB/44 (04-05)
Approved for use through 04/30/2007. OMB 0651-0033
U.S. Patent and Trademark Office; U.S. DEPARTMENT OF COMMERCE
Under the Paperwork Reduction Act of 1995, no persons are required to respond to a collection of information unless it displays a valid OMB control number.
(Also Form PTO-1050)

UNITED STATES PATENT AND TRADEMARK OFFICE
CERTIFICATE OF CORRECTION

PATENT NO. : 7,101,993

APPLICATION NO.: 07/967,267

ISSUE DATE : 09/05/2006

INVENTOR(S) : Phillip Dan Cook

It is certified that an error appears or errors appear in the above-identified patent and that said Letters Patent is hereby corrected as shown below:

45) Column 29, claim 14, please insert -- 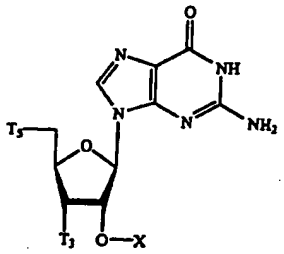 --

between "structure: " and "wherein".

MAILING ADDRESS OF SENDER (Please do not use customer number below):

Isis Pharmaceuticals, Inc.
1896 Rutherford Rd.
Carlsbad, CA 92008

This collection of information is required by 37 CFR 1.322, 1.323, and 1.324. The information is required to obtain or retain a benefit by the public which is to file (and by the USPTO to process) an application. Confidentiality is governed by 35 U.S.C. 122 and 37 CFR 1.14. This collection is estimated to take 1.0 hour to complete, including gathering, preparing, and submitting the completed application form to the USPTO. Time will vary depending upon the individual case. Any comments on the amount of time you require to complete this form and/or suggestions for reducing this burden, should be sent to the Chief Information Officer, U.S. Patent and Trademark Office, U.S. Department of Commerce, P.O. Box 1450, Alexandria, VA 22313-1450. DO NOT SEND FEES OR COMPLETED FORMS TO THIS ADDRESS. SEND TO: **Attention Certificate of Corrections Branch, Commissioner for Patents, P.O. Box 1450, Alexandria, VA 22313-1450.**

If you need assistance in completing the form, call 1-800-PTO-9199 and select option 2.

UNITED STATES PATENT AND TRADEMARK OFFICE

Commissioner for Patents
United States Patent and Trademark Office
P.O. Box 1450
Alexandria, VA 22313-1450
www.uspto.gov

Alexander D. Johnson
7403 Clement Road
Vacaville CA 95688

COPY MAILED

APR 19 2007

OFFICE OF PETITIONS

In re Patent No.:5,326,458
issue Date: July 5, 1994
Application No. 07/968,906
Filed: October 30, 1992
Inventor: Johnson

: ON PETITION

This is a decision on the petition under 37 CFR 1.378(c), received October 3, 2006, and resubmitted by facsimile transmission April 13, 2007, to accept as unintentionally delayed the 7½ year maintenance fee for the above-identified patent. The delay in treating the petition is regretted.

The petition is **dismissed**. The above-captioned patent remains expired.

If reconsideration of this decision is desired, a petition and $400 fee for reconsideration under 37 CFR 1.378(e) must be filed within TWO (2) MONTHS from the mail date of this decision. No extension of this 2-month time limit can be granted under 37 CFR 1.136(a) or (b). The petition for reconsideration should include an exhaustive attempt to provide the item(s) noted below, if any, since, after a decision on any petition for reconsideration, no further reconsideration or review of the matter will be undertaken by the Director.

The above-identified patent issued July 5, 1994. The 3½ year maintenance fee was timely paid with a mail room date of receipt of December 22, 1997. Accordingly, the 7½ year maintenance fee was due January 5, 2002, and was payable from July 5, 2001, through January 5, 2002, or with a surcharge, from January 6, 2002, through July 5, 2002. Since this maintenance fee was not timely paid, the patent expired at midnight on July 5, 2002.

Unfortunately, as the petition was filed more than 24 months (*i.e.*, 51 months) after the grace period ended on July 5, 2004, petitioner is precluded by law from seeking, and the USPTO from granting, reinstatement of this patent under the unintentional standard. As this 24 month time period is expressly recited in the patent statute, that 24 month period may not be extended or excused by the USPTO. See 35 U.S.C. § 41(c)(1). That is, the maintenance fee would have to have been proffered to the USPTO no later than 24 months from the July 5, 2002, date of expiry, *viz* July 5, 2004. Since the maintenance fee in question was not received any earlier than October 3, 2006, the petition considered under 37 CFR 1.378(c) must be dismissed as irrevocably time barred.

While petitioner is precluded by law from seeking reinstatement of this patent under the "unintentional" standard of 37 CFR 1.378(c) due to the time bar, he is advised that there is no time limit for seeking reinstatement under the "unavoidable delay" standard of 35 U.S.C. § 41(c)(1) and 37 CFR 1.378(b).

If the delayed payment of the maintenance fee was unavoidable, a petition can be filed under 37 CFR 1.378 (b). A petition to accept the delayed payment of a maintenance fee under 35 USC 41(c) and 37 CFR 1.378(b) must be accompanied by (1) an adequate, verified showing that the delay was unavoidable, since reasonable care was taken to insure that the maintenance fee would be paid timely, (2) payment of the appropriate seven and one half year maintenance fee, unless previously submitted, and (3) payment of the $700 surcharge set forth in 37 CFR 1.20(i)(1), which is already exceeded by the fees of record.37 CFR 1.378(b) provides that a patent may be reinstated at any time following expiration of the patent for failure to timely pay a maintenance fee. A petition to accept late payment of a maintenance fee, where the delay was unavoidable, must include:

(A) the required maintenance fee set forth in 37 CFR 1.20(e)-(g);

(B) the surcharge set forth in 37 CFR 1.20(i)(1); and

(C) a documented showing that the delay was unavoidable since reasonable care was taken to ensure that the maintenance fee would be paid timely and that the petition was filed promptly after the patentee was notified of, or otherwise became aware of, the expiration of the patent.

The required showing must enumerate the steps taken to ensure timely payment of the maintenance fee, the date and the manner in which patentee became aware of the expiration of the patent, and the steps taken to file the petition promptly. Furthermore, an adequate showing requires a statement by all persons with direct knowledge of the cause of the delay, setting forth the facts as they know them. Copies of all documentary evidence referred to in a statement should be furnished as exhibits to the statement. A general discussion of the "unavoidable delay" standard as applied to maintenance fee issues may be found in Manual of Patent Examining Procedure (MPEP) section 2590, subsection I, available on the USPTO website at: http://www.uspto.gov/web/offices/pac/mpep/documents/2500_2590.htm#sect2590

The foregoing was given for informational purposes only and should not be construed as a recommended course of action, or that such a course of action, if undertaken, would be likely to succeed, as the "unavoidable delay" standard is stringent. Petitioner is permitted to obtain the services of a registered practitioner, if he desires. The USPTO may not assist in the selection of a registered practitioner, but a list may be obtained from the USPTO web site at: http://des.uspto.gov/OEDCI/.

If this petition is not renewed or if renewed and not granted, then petitioner may request a refund of the maintenance and surcharge fees paid from the Office of Finance, Refunds Section (Mail Stop 16) at the USPTO address above. The fee for requesting reconsideration is not refundable.

Any forthcoming renewed petition under 37 CFR 1.378(c), or any forthcoming petition under 37 CFR 1.378(b) should be addressed as follows:

By mail: Mail Stop PETITIONS
Commissioner for Patents
Post Office Box 1450
Alexandria, VA 22313-1450

By hand: Customer Service Window
Randolph Building 401 Dulany Street
Alexandria, VA 22314:

By fax: (703) 571-273-8300
ATTN: Office of Petitions

Telephone inquiries related to this decision should be directed to the undersigned at (571) 272-3217.

Brian Hearn
Petitions Examiner
Office of Petitions

7403 Clement Road
Vacaville, California 95688
707-592-9493

Alexander Dan Johnson

Fax

FAX RECEIVED
APR 13 2007
OFFICE OF PETITIONS

To:	Beth Ann Dayoan	**From:**	Dan Johnson
Fax:	571-~~271~~ 273-0025	**Pages:**	9
Phone:	571-272-3209	**Date:**	~~4/11/2007~~ 4-13-07
Re:	Lost Petitions	**CC:**	Congresswoman Ellen Tauscher

x **Urgent** ☐ **For Review** x **Please Comment** ☐ **Please Reply** ☐ **Please Recycle**

• **Comments:** Beth Ann, this is the third time that I have sent in this information. The first time, your office cashed the check. The second time, your office processed the change of address. This time, I trust, something will be done about my petition. I am told that this process can take up to 4 months. I trust that this will be expedited due to the six months that I have already waited. Not to mention the money that I have lost, roughly $30,000.

The reason that I missed the maintenance fee payments is that the first payment was miss-applied as an administration fee. And, the change of address that I filed at that time was not processed. Therefore, I was not notified of the late payments. Can it be that your office really have this much trouble processing paperwork?

application 07968906
date Oct 30, 1992

Patent 5 326 455
date July 5 1994

US005326458A

United States Patent [19]

Johnson

[11] Patent Number: 5,326,458

[45] Date of Patent: Jul. 5, 1994

[54] LIQUID SKIMMING SYSTEM

[76] Inventor: Alexander D. Johnson, 2000 Woolner Ave., Fairfield, Calif. 94533

[21] Appl. No.: 968,986

[22] Filed: Oct. 30, 1992

[51] Int. Cl. C02F 1/40

[52] U.S. Cl. 210/222; 210/170; 210/242.3; 166/265

[58] Field of Search 210/122, 242.3, 242.4, 210/170, 923, 924; 166/265

[56] References Cited

U.S. PATENT DOCUMENTS

3,667,603	6/1972	Burroughs et al.	210/242.4
4,761,225	8/1988	Breslin	210/242.3
4,872,954	10/1989	Jakob	210/170
4,974,674	12/1990	Wells	210/242.3
5,207,897	5/1993	Baird et al.	210/242.3

Primary Examiner—Christopher Upton
Attorney, Agent, or Firm—Townsend and Townsend Khourie and Crew

[57] ABSTRACT

A skimmer assembly for use in a well has a shielded float/filter assembly with a hydrophobic/oleophilic filter element, which permits selective passage of lighter than water liquids, such as oil or other hydrocarbons, to the inlet of a pumping assembly. The pumping assembly is provided with two pumps: a lower pump for pumping the lighter than water liquid to the surface of the earth, and an upper pump for pumping water in the well to the surface of the earth. Each pump is operated by a common logic valve, to which compressed air is supplied and which regulates the application of compressed air to the upper side of a diaphragm in each pump. The lower side of the diaphragm is forced upwardly by means of a spring arranged within the pumping volume below the diaphragm. A bias spring between the backing plate and a centrally located inlet valve function to close the valve from the inlet to the pump. The logic valve provides an adjustable pumping cycle and incorporates a poppet valve and a pilot leading to an adjustable [illegible] in situ for extended periods of time without deterioration in the pumping operation. Because the pump has its controlling logic built in, there is no need for complicated above ground pump controls.

14 Claims, 7 Drawing Sheets

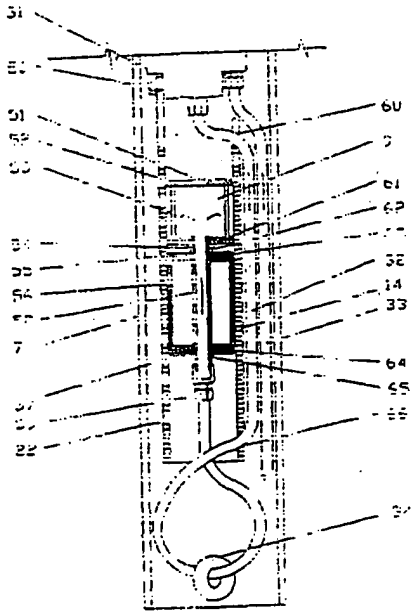

7403 Clement Rd.
Vacaville, CA 95688-9318

FAX RECEIVED

APR 13 2007

OFFICE OF PETITIONS

April 6, 2007

Ellen Tauscher
Congresswoman
2121 North California Blvd, Suite 555
Walnut Creek, CA 94596

Dear Ellen Tauscher,

I have an ongoing problem with the US Patent Office that I have not been able to resolve on my own. I hope that you will be able to help.

On Oct 3, 2006, I mailed a petition to the US Patent Office to have my patent reinstated. The mailing included the petition form, a change of address form, and a check for $4,690 for maintenance feeds and late charges. I called the patent office Oct 26, 2006 when I did not hear from them. I called again Nov 29, 2006. Again, I called on Jan 22, 2007. Each time I call, I get the same story; "We have a record of receiving your check. However, we don't have any record of receiving a petition of a change of address. Perhaps you should resend the petition and start the process over. It takes up to 4 months to process these petitions. To go any further, you will have to get someone to pull your file. But, I am not the one to pull the file and I can't tell you who will pull it." On Jan 24, 2007, I mailed a copy of the forms again. The last time I called, I asked to speak to a manager. She never called back. The reason that the patent has lapsed is because; my first maintenance fee was miss-applied as an administration fee instead of a maintenance fee. And, they did not process the change of address that I filed at that time. Therefore, I did not receive any notifications of the fees being due.

The patent office says that processing such a petition can take up to four months. It has now been more than six months. They have had $4,690 of my money tied up, not to mention $25,000 to $30,000 of lost royalties. Is there anything that you can do? Perhaps a call from your office will get some action.

This morning I called the patent office again and finally got a little information. The petitions are assigned based on the last two digits of the application number, in my case 06. Mr. John Gillon has been assigned my petition. Mr. Gillon has been on a YEAR LONG LEAVE OF ABLENCE. The gentleman that I spoke to said that he would send an e-mail to Beth Ann Dayoan 571-272-3209 who assigns the cases.

Sincerely,

Dan Johnson PE
A. D. Johnson Engineering

7403 Clement Road
Vacaville, California 95688
707-592-9493

Alexander Dan Johnson

Fax

FAX RECEIVED
APR 13 2007
OFFICE OF PETITIONS

To:	Beth Ann Dayoan	**From:**	Dan Johnson
Fax:	571-~~271~~ 273-0025	**Pages:**	9
Phone:	571-272-3209	**Date:**	~~4/11/2007~~ 4-13-07
Re:	Lost Petitions	**CC:**	Congresswoman Ellen Tauscher

x **Urgent** ☐ **For Review** x **Please Comment** ☐ **Please Reply** ☐ **Please Recycle**

• **Comments:** Beth Ann, this is the third time that I have sent in this information. The first time, your office cashed the check. The second time, your office processed the change of address. This time, I trust, something will be done about my petition. I am told that this process can take up to 4 months. I trust that this will be expedited due to the six months that I have already waited. Not to mention the money that I have lost, roughly $30,000.

The reason that I missed the maintenance fee payments is that the first payment was miss-applied as an administration fee. And, the change of address that I filed at that time was not processed. Therefore, I was not notified of the late payments. Can it be that your office really have this much trouble processing paperwork?

application 07968906
date Oct 30, 1992

Patent 5 326 455
date July 5 1994

US005326458A

United States Patent [19]

Johnson

[11] Patent Number: 5,326,458

[45] Date of Patent: Jul. 5, 1994

[54] LIQUID SKIMMING SYSTEM

[76] Inventor: Alexander D. Johnson, 2008 Woolner Ave., Fairfield, Calif. 94533

[21] Appl. No.: 968,906

[22] Filed: Oct. 30, 1992

[51] Int. Cl.[5] C02F 1/40

[52] U.S. Cl. 210/222; 210/170; 210/242.3; 166/265

[58] Field of Search 210/122, 242.3, 242.4, 210/170, 923, 924; 166/265

[56] References Cited

3,667,608	6/1972	Burroughs et al	210/242.4
4,761,225	8/1988	Breslin	210/242.3
4,872,994	10/1989	Jakob	210/170
4,974,674	12/1990	Wells	210/242.3
5,207,897	5/1993	Baird et al.	210/242.3

Primary Examiner—Christopher Upton
Attorney, Agent, or Firm—Townsend and Townsend Khourie and Crew

[57] ABSTRACT

A skimmer assembly for use in a well has a shielded float/filter assembly with a hydrophobic/oleophilic filter element, which permits selective passage of lighter than water liquids, such as oil or other hydrocarbons, to the inlet of a pumping assembly. The pumping assembly is provided with two pumps: a lower pump for pumping the lighter than water liquid to the surface of the earth, and an upper pump for pumping water in the well to the surface of the earth. Each pump is operated by a common logic valve, to which compressed air is supplied and which regulates the application of compressed air to the upper side of a diaphragm in each pump. The lower side of the diaphragm is forced upwardly by means of a spring arranged within the pumping volume below the diaphragm. A bias spring between the backing plate and a centrally located inlet valve function to close the valve from the inlet to the pump. The logic valve provides an adjustable pumping cycle and incorporates a poppet valve and a pilot leading to an adjustable [illegible] in situ for extended periods of time without deterioration in the pumping operation. Because the pump has its controlling logic built in, there is no need for complicated above ground pump controls.

14 Claims; 7 Drawing Sheets

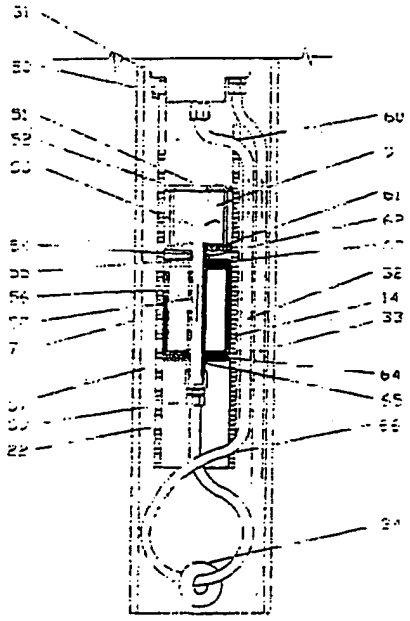

SKIMMER ATTACHMENT

7403 Clement Rd.
Vacaville, CA 95688-9318

FAX RECEIVED

APR 13 2007

OFFICE OF PETITIONS

April 6, 2007

Ellen Tauscher
Congresswoman
2121 North California Blvd, Suite 555
Walnut Creek, CA 94596

Dear Ellen Tauscher,

I have an ongoing problem with the US Patent Office that I have not been able to resolve on my own. I hope that you will be able to help.

On Oct 3, 2006, I mailed a petition to the US Patent Office to have my patent reinstated. The mailing included the petition form, a change of address form, and a check for $4,690 for maintenance feeds and late charges. I called the patent office Oct 26, 2006 when I did not hear from them. I called again Nov 29, 2006. Again, I called on Jan 22, 2007. Each time I call, I get the same story; "We have a record of receiving your check. However, we don't have any record of receiving a petition of a change of address. Perhaps you should resend the petition and start the process over. It takes up to 4 months to process these petitions. To go any further, you will have to get someone to pull your file. But, I am not the one to pull the file and I can't tell you who will pull it." On Jan 24, 2007, I mailed a copy of the forms again. The last time I called, I asked to speak to a manager. She never called back. The reason that the patent has lapsed is because; my first maintenance fee was miss-applied as an administration fee instead of a maintenance fee. And, they did not process the change of address that I filed at that time. Therefore, I did not receive any notifications of the fees being due.

The patent office says that processing such a petition can take up to four months. It has now been more than six months. They have had $4,690 of my money tied up, not to mention $25,000 to $30,000 of lost royalties. Is there anything that you can do? Perhaps a call from your office will get some action.

This morning I called the patent office again and finally got a little information. The petitions are assigned based on the last two digits of the application number, in my case 06. Mr. John Gillon has been assigned my petition. Mr. Gillon has been on a YEAR LONG LEAVE OF ABLENCE. The gentleman that I spoke to said that he would send an e-mail to Beth Ann Dayoan 571-272-3209 who assigns the cases.

Sincerely,

Dan Johnson PE
A. D. Johnson Engineering

XITECH
Instruments, Inc.
[illegible] Camino De Los Buenos Aires, Placitas, New Mexico, 87043 USA
Phone: 505-[illegible]-0000 FAX: 505-867-0212

FAX RECEIVED
APR 13 2007
OFFICE OF PETITIONS

September 22, 2006

Dan Johnson
7403 Clement Road
Vacaville, CA 95688

I am sorry to be the bearer of bad news but I just recently discovered a serious problem with our skimmer patent. I was doing a search for competitor patents on the www.uspto.gov site this week when I stumbled on a report (see enclosed) that indicated that our patent had expired back on August 6, 2002 due to "NonPayment of a Maintenance fee". I can't tell you how upsetting this news was to me. All I can suggest is that you get in touch with Townsend and get our patent reinstated. I have decided to suspend all royalty payments until you get the patent reinstated. I am very sorry for the bad news. We were supposed to be patent protected up to the year 2012.

Good Luck

Dwight Patterson
President

[illegible] xitechinc.com E mail: xitechinc@xitechinc.com

Dan Johnson
7403 Clement Rd.
Vacaville, CA 95688

FAX RECEIVED

APR 13 2007

OFFICE OF PETITIONS

January 23, 2007

Mail Stop Petition
Commissioner for Patents
P.O. Box 1450
Alexandria, VA 22313-1450

Dear Sir or Madam:

I am re-submitting these forms because there seems to be no record of you having receiving them other than my canceled check. Whenever I call, I am told that the patent office has a record of my check but no record of my petition or the change of address that accompanied the check. I originally mailed these forms October 3, 2006. I have submitted a change of address form several times including the letter sent on October 3. So, please use the above address for any further correspondence. I trust that the apparent loss of the Petition to Accept Unintentionally Delayed Payment of Maintenance Fee will not delay the processing time.

Sincerely,

Alexander Dan Johnson

Enclosure: Copy of Canceled check
Copy of Petition to Accept Unintentionally Delayed Payment of Maintenance Fee
Copy of Change of Correspondence Address

FAX RECEIVED
APR 13 2007
OFFICE OF PETITIONS

UNITED STATES POSTAL SERVICE

Track & Confirm

Search Results

Label/Receipt Number: EB12 8180 384U S
Detailed Results:

- Delivered, January 26, 2007, 8:55 am, ALEXANDRIA, VA 22313
- Arrival at Unit, January 26, 2007, 5:15 am, DULLES, VA 20102
- Enroute, January 24, 2007, 5:15 pm, WEST SACRAMENTO, CA 95799
- Acceptance, January 24, 2007, 10:47 am, VACAVILLE, CA 95687

Track & Confirm

Enter Label/Receipt Number.

Go >

< Back

Return to USPS.com Home >

Notification Options

Track & Confirm by email

Get current event information or updates for your item sent to you or others by email. Go >

Proof of Delivery

Verify who signed for your item by email, fax, or mail. Go >

Copyright © 1999-2004 USPS. All Rights Reserved. Terms of Use Privacy Policy

Date: January 22, 2007

Wells Fargo PhotoCopy Request

Reference: 2000097291478:2000097297478:2000097256478

FAX RECEIV
APR 13 2007
OFFICE OF PETITIC

A D JOHNSON ENGINEERING
7403 CLEMENT RD. PH. 707-592-9493
VACAVILLE, CA 95688

11-4288 4827
1210
8086301523

1123

Date 10-2-06

Pay to the Order of US Patent office $ 4690

Four thousand Six hundred ninety NO/100 Dollars

Wells Fargo Bank, N.A.
California
wellsfargo.com

Memo Patent # 5,326,458

⑆121042882⑆8086301523⑈ 01123 ⑈0000469000⑈

BANK OF AMERICA,NA LAC
122000661 E3791 90 1d
10/13/06
4760811697

WFB LA, CA 10132006
TRACER 0 0738 PKT. 001
122105278
0526970986

3052 72 1

PATENT AND TRADEMARK OFFICE
13-10-0001
10-10-2006
FOR CREDIT TO THE
U.S. TREASURY

⑆0312007304⑆
WACHOVIA NA SVC071 0443T
PHILA, PA 10122006- 16FK
1013595105

R/T Number	12104288	Processing Date	20061013
Sequence Number	526970986	Amount	4690.0
Account Number	8086301523	Check Number	1123

VACAVILLE MAIN PO
VACAVILLE, California
95687-998
0566760528 -0096
/2006 (800)275-8777 11:50:30 AM

Sale Receipt

ict iption	Sale Qty	Unit Price	Final Price
NDRIA VA 22313			$14.40
ss Mail PO-ADD			
z.			
l #: EQ792628867US			
Day 3PM / Normal			
very			
			========
e PVI:			$14.40
R	1	$0.39	$0.39
son PSA			
:			$14.79
by:			$15.00
e Due:			-$0.21

stamps at USPS com/shop or call
)-Stamp24. Go t
.com/clicknship print shipping
s with postage. For other
mation call 1-800-ASK-USPS.
#: 1000401974208
:: 06

l sales final stamps and postage.
funds for guaranteed services only.
Thank you for your business.
Customer Copy

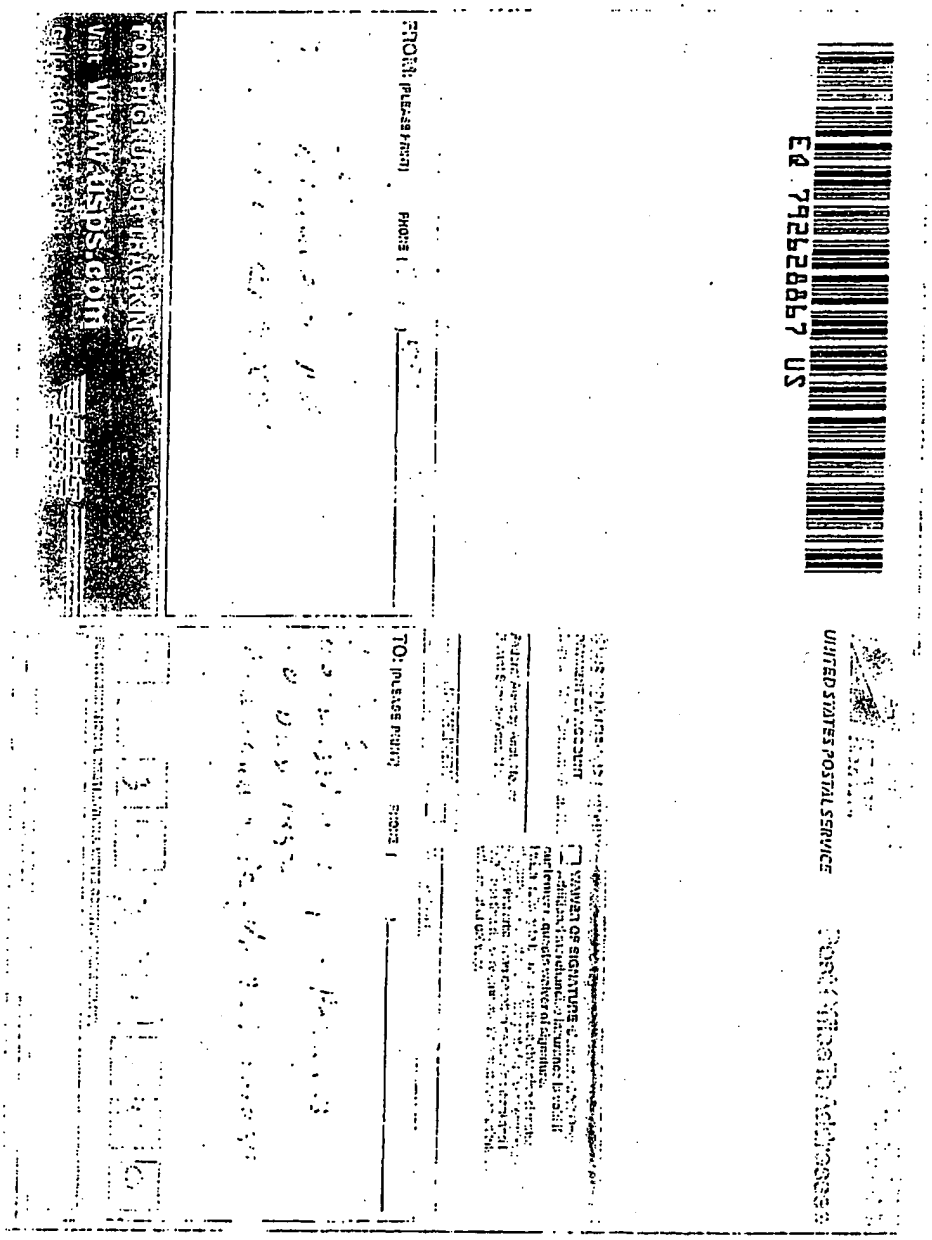

APR 13 2007

OFFICE OF PETITIONS

PTO/SB/66 (10-05)
Approved for use through 04/30/2009. OMB 0651-0016
U.S. Patent and Trademark Office; U.S. DEPARTMENT OF COMMERCE
Under the Paperwork Reduction Act of 1995, no persons are required to respond to a collection of information unless it displays a valid OMB control number.

PETITION TO ACCEPT UNINTENTIONALLY DELAYED PAYMENT OF MAINTENANCE FEE IN AN EXPIRED PATENT (37 CFR 1.378(c))

Docket Number (Optional)

Mail to: Mail Stop Petition
Commissioner for Patents
P.O. Box 1450
Alexandria, VA 22313-1450
Fax: (571) 273-8300

NOTE: If information or assistance is needed in completing this form, please contact Petitions Information at (571) 272-3282.

Patent No. 5,326,458 Application Number 07 968 906

Issue Date July 5, 1994 Filing Date Oct. 30, 1992

CAUTION: Maintenance fee (and surcharge, if any) payment must correctly identify: (1) the patent number (or reissue patent number, if a reissue) and (2) the application number of the actual U.S. application (or reissue application) leading to issuance of that patent to ensure the fee(s) is/are associated with the correct patent. 37 CFR 1.366(c) and (d).

Also complete the following information, if applicable

The above - identified patent:

☐ is a reissue of original Patent No. _____, original issue date _____; original application number _____, original filing date _____.

☐ resulted from the entry into the U.S. under 35 U.S.C. 371 of international application _____ filed on _____.

CERTIFICATE OF MAILING (37 CFR 1.8(a))

I hereby certify that this paper (along with any paper referred to as being attached or enclosed) is being deposited with the United States Postal Service on the date shown below with sufficient postage as first class mail in an envelope addressed to Mail Stop Petition, Commissioner for Patents, P.O. Box 1450, Alexandria, VA 22313-1450, or facsimile transmitted to the U.S. Patent and Trademark Office on the date shown below.

10-3-2006
Date

Dan Johnson
Signature

Alexander Dan Johnson
Typed or printed name of person signing Certificate

This collection of information is required by 37 CFR 1.378(c). The information is required to obtain or retain a benefit by the public which is to file (and by the USPTO to process) an application. Confidentiality is governed by 35 U.S.C. 122 and 37 CFR 1.11 and 1.14. This collection is estimated to take 1 hour to complete, including gathering, preparing, and submitting the completed application form to the USPTO. Time will vary depending upon the individual case. Any comments on the amount of time you require to complete this form and/or suggestions for reducing this burden, should be sent to the Chief Information Officer, U.S. Patent and Trademark Office, U.S. Department of Commerce, P.O. Box 1450, Alexandria, VA 22313-1450. DO NOT SEND FEES OR COMPLETED FORMS TO THIS ADDRESS. SEND TO: Mail Stop Petition, Commissioner for Patents; P.O. Box 1450, Alexandria, VA 22313-1450.

If you need assistance in completing the form, call 1-800-PTO-9199 and select option 2.

PTO/SB/66 (10-05)
Approved for use through 04/30/2009. OMB 0651-0016
U.S. Patent and Trademark Office; U.S. DEPARTMENT OF COMMERCE
Under the Paperwork Reduction Act of 1995, no persons are required to respond to a collection of information unless it displays a valid OMB control number.

1. SMALL ENTITY

☑ Patentee claims, or has previously claimed, small entity status. See 37 CFR 1.27.

2. LOSS OF ENTITLEMENT TO SMALL ENTITY STATUS

☐ Patentee is no longer entitled to small entity status. See 37 CFR 1.27(g).

3. MAINTENANCE FEE (37 CFR 1.20(e)-(g))

The appropriate maintenance fee must be submitted with this petition, unless it was paid earlier.

NOT Small Entity			Small Entity		
Amount	Fee	(Code)	Amount	Fee	(Code)
☐ $ _____	3 1/2 yr fee	(1551)	☑ $ 450	3 1/2 yr fee	(2551)
☐ $ _____	7 1/2 yr fee	(1552)	☑ $ 1150	7 1/2 yr fee	(2552)
☐ $ _____	11 1/2 yr fee	(1553)	☑ $ 1900	11 1/2 yr fee	(2553)

MAINTENANCE FEE BEING SUBMITTED $ 3500

4. SURCHARGE

The surcharge required by 37 CFR 1.20(i)(2) of $ 1190 (Fee Code 1558) must be paid as a condition of accepting unintentionally delayed payment of the maintenance fee.

SURCHARGE BEING SUBMITTED $ 1190

5. MANNER OF PAYMENT

☑ Enclosed is a check for the sum of $ 4690.00.

☐ Please charge Deposit Account No. _____ the sum of $ _____. A duplicate copy of this authorization is attached.

☐ Payment by credit card. Form PTO-2038 is attached.

6. AUTHORIZATION TO CHARGE ANY FEE DEFICIENCY

☐ The Director is hereby authorized to charge any maintenance fee, surcharge or petition deficiency to Deposit Account No. _____. A duplicate copy of this authorization is attached.

PTO/SB/66 (10-05)
Approved for use through 04/30/2009. OMB 0651-0016
U.S. Patent and Trademark Office; U.S. DEPARTMENT OF COMMERCE
Under the Paperwork Reduction Act of 1995, no persons are required to respond to a collection of information unless it displays a valid OMB control number

7. OVERPAYMENT

As to any overpayment made please

☐ Credit to Deposit Account No._____.

OR

☑ Send refund check.

WARNING:

Petitioner/applicant is cautioned to avoid submitting personal information in documents filed in a patent application that may contribute to identity theft. Personal information such as social security numbers, bank account numbers, or credit card numbers (other than a check or credit card authorization form PTO-2038 submitted for payment purposes) is never required by the USPTO to support a petition or an application. If this type of personal information is included in documents submitted to the USPTO, petitioners/applicants should consider redacting such personal information from the documents before submitting them to the USPTO. Petitioner/applicant is advised that the record of a patent application is available to the public after publication of the application (unless a non-publication request in compliance with 37 CFR 1.213(a) is made in the application) or issuance of a patent. Furthermore, the record from an abandoned application may also be available to the public if the application is referenced in a published application or an issued patent (see 37 CFR 1.14). Checks and credit card authorization forms PTO-2038 submitted for payment purposes are not retained in the application file and therefore are not publicly available.

8. STATEMENT

The delay in payment of the maintenance fee to this patent was unintentional.

9. PETITIONER(S) REQUEST THAT THE DELAYED PAYMENT OF THE MAINTENANCE FEE BE ACCEPTED AND THE PATENT REINSTATED.

Dan Johnson
Signature(s) of Petitioner(s)

10-3-2006
Date

Alexander Dan Johnson
Typed or printed name(s)

Registration Number, if applicable

707-592-9493
Telephone Number

7403 Clement Rd.
Address

Vacaville, California 95688
Address

37 CFR 1.378(d) states: "Any petition under this section must be signed by an attorney or agent registered to practice before the Patent and Trademark Office, or by the patentee, the assignee, or other party in interest."

ENCLOSURES:

☑ Maintenance Fee payment

☑ Surcharge under 37 CFR 1.20(i)(2) (fee for filing the maintenance fee petition)

☐ _____

FAX RECEIVED

APR 13 2007

OFFICE OF PETITIONS

PTO/SB/123 (01-06)
Approved for use through 12/31/2008. OMB 0651-0035
U.S. Patent and Trademark Office; U.S. DEPARTMENT OF COMMERCE

Under the Paperwork Reduction Act of 1995, no persons are required to respond to a collection of information unless it displays a valid OMB control number.

CHANGE OF CORRESPONDENCE ADDRESS
Patent

Address to:
Mail Stop Post Issue
Commissioner for Patents
P.O. Box 1450
Alexandria, VA 22313-1450

Patent Number	5,326,458
Issue Date	July 5, 1994
Application Number	07, 968, 906
Filing Date	Oct 30, 1992
First Named Inventor	Alexander Dan Johnson
Attorney Docket Number	

Please change the Correspondence Address for the above-identified patent to:

☐ The address associated with Customer Number:

OR

☒ Firm or Individual Name Alexander Dan Johnson

Address 7403 Clement Rd.

City Vacaville State CA ZIP 95688

Country USA

Telephone 707-592-9493 Email dan.johnson@solanowireless.com

This form cannot be used to change the data associated with a Customer Number. To change the data associated with an existing Customer Number use "Request for Customer Number Data Change" (PTO/SB/124).

This form will not affect any "fee address" provided for the above-identified patent. To change a "fee address" use the "Fee Address Indication Form" (PTO/SB/47).

I am the:

x ☒ Patentee.

☐ Assignee of record of the entire interest. See 37 CFR 3.71. Statement under 37 CFR 3.73(b) is enclosed. (Form PTO/SB/96).

☐ Attorney or agent of record. Registration Number _____.

Signature Alexander Dan Johnson

Typed or Printed Name Alexaner Dan Johnson

Date Jan. 23.2007 Telephone 707-592-9493

NOTE: Signatures of all the inventors or assignees of record of the entire interest or their representative(s) are required. Submit multiple forms if more than one signature is required, see below*.

☐ *Total of _____ forms are submitted.

This collection of information is required by 37 CFR 1.33. The information is required to obtain or retain a benefit by the public which is to file (and by the USPTO to process) an application. Confidentiality is governed by 35 U.S.C. 122 and 37 CFR 1.11 and 1.14. This collection is estimated to take 3 minutes to complete, including gathering, preparing, and submitting the completed application form to the USPTO. Time will vary depending upon the individual case. Any comments on the amount of time you require to complete this form and/or suggestions for reducing this burden, should be sent to the Chief Information Officer, U.S. Patent and Trademark Office, U.S. Department of Commerce, P.O. Box 1450, Alexandria, VA 22313-1450. DO NOT SEND FEES OR COMPLETED FORMS TO THIS ADDRESS. SEND TO: **Mail Stop Post Issue, Commissioner for Patents, P.O. Box 1450, Alexandria, VA 22313-1450.**

If you need assistance in completing the form, call 1-800-PTO-9199 and select option 2.

Under the Paperwork Reduction Act of 1995, no persons are required to respond to a collection of information unless it displays valid OMB control number.

PETITION TO ACCEPT UNINTENTIONALLY DELAYED PAYMENT OF MAINTENANCE FEE IN AN EXPIRED PATENT (37 CFR 1.378(c))

Patent Number	Issue Date (YYYY-MM-DD)	Application Number	Filing Date (YYYY-MM-DD)	Docket Number (if applicable)
5,369,263	1994-11-29	07970410	1992-10-30	12174-36653

CAUTION: Maintenance fee (and surcharge, if any) payment must correctly identify: (1) the patent number and (2) the application number of the actual U.S. application leading to issuance of that patent to ensure the fee(s) is/are associated with the correct patent. 37 CFR 1.366(c) and (d).

SMALL ENTITY
☐ Patentee claims, or has previously claimed, small entity status. See 37 CFR 1.27.

LOSS OF ENTITLEMENT TO SMALL ENTITY STATUS
☐ Patentee is no longer entitled to small entity status. See 37 CFR 1.27(g)

NOT Small Entity		Small Entity	
Fee	Code	Fee	Code
○ 3 ½ year	(1551)	○ 3 ½ year	(2551)
○ 7 ½ year	(1552)	○ 7 ½ year	(2552)
◉ 11 ½ year	(1553)	○ 11 ½ year	(2553)

SURCHARGE
The surcharge required by 37 CFR 1.20(i)(2) (Fee Code 1558) must be paid as a condition of accepting unintentionally delayed payment of the maintenance fee.

MAINTENANCE FEE (37 CFR 1.20(e)-(g))
The appropriate maintenance fee must be submitted with this petition.

STATEMENT
THE UNDERSIGNED CERTIFIES THAT THE DELAY IN PAYMENT OF THE MAINTENANCE FEE TO THIS PATENT WAS UNINTENTIONAL

PETITIONER(S) REQUEST THAT THE DELAYED PAYMENT OF THE MAINTENANCE FEE BE ACCEPTED AND THE PATENT REINSTATED

THIS PORTION MUST BE COMPLETED BY THE SIGNATORY OR SIGNATORIES

37 CFR 1.378(d) states: "Any petition under this section must be signed by an attorney or agent registered to practice before the Patent and Trademark Office, or by the patentee, the assignee, or other party in interest."

I certify, in accordance with 37 CFR 1.4(d)(4) that I am

◉ An attorney or agent registered to practice before the Patent and Trademark Office

○ A sole patentee

○ A joint patentee; I certify that I am authorized to sign this submission on behalf of all the other patentees.

○ A joint patentee; all of whom are signing this e-petition

○ The assignee of record of the entire interest

Patent Practitioner			
A signature of the applicant or representative is required in accordance with 37 CFR 1.33 and 10.18. Please see 37 CFR 1.4(d) for the form of the signature			
Signature	/John R. Harris/	Date (YYYY-MM-DD)	2007-07-18
Name	John R. Harris	Registration Number	30388

This collection of information is required by 37 CFR 1.378(c). The information is required to obtain or retain a benefit by the public which is to file (and by the USPTO to process) an application. Confidentiality is governed by 35 U.S.C. 122 and 37 CFR 1.11 and 1.14. This collection is estimated to take 1 hour to complete, including gathering, preparing, and submitting the completed application form to the USPTO. Time will vary depending upon the individual case. Any comments on the amount of time you require to complete this form and/ or suggestions for reducing this burden, should be sent to the Chief Information Officer, U.S. Patent and Trademark Office, U.S. Department of Commerce, P.O. Box 1450, Alexandria, VA 22313-1450. DO NOT SEND FEES OR COMPLETED FORMS TO THIS ADDRESS. **This form can only be used when in conjunction with EFS-Web. If this form is mailed to the USPTO, it may cause delays in reinstating the patent.**

Privacy Act Statement

The Privacy Act of 1974 (P.L. 93-579) requires that you be given certain information in connection with your submission of the attached form related to a patent application or patent. Accordingly, pursuant to the requirements of the Act, please be advised that: (1) the general authority for the collection of this information is 35 U.S.C. 2(b)(2); (2) furnishing of the information solicited is voluntary; and (3) the principal purpose for which the information is used by the U.S. Patent and Trademark Office is to process and/or examine your submission related to a patent application or patent. If you do not furnish the requested information, the U.S. Patent and Trademark Office may not be able to process and/or examine your submission, which may result in termination of proceedings or abandonment of the application or expiration of the patent.

The information provided by you in this form will be subject to the following routine uses:

1. The information on this form will be treated confidentially to the extent allowed under the Freedom of Information Act (5 U.S.C. 552) and the Privacy Act (5 U.S.C. 552a). Records from this system of records may be disclosed to the Department of Justice to determine whether the Freedom of Information Act requires disclosure of these record s.

2. A record from this system of records may be disclosed, as a routine use, in the course of presenting evidence to a court, magistrate, or administrative tribunal, including disclosures to opposing counsel in the course of settlement negotiations.

3. A record in this system of records may be disclosed, as a routine use, to a Member of Congress submitting a request involving an individual, to whom the record pertains, when the individual has requested assistance from the Member with respect to the subject matter of the record.

4. A record in this system of records may be disclosed, as a routine use, to a contractor of the Agency having need for the information in order to perform a contract. Recipients of information shall be required to comply with the requirements of the Privacy Act of 1974, as amended, pursuant to 5 U.S.C. 552a(m).

5. A record related to an International Application filed under the Patent Cooperation Treaty in this system of records may be disclosed, as a routine use, to the International Bureau of the World Intellectual Property Organization, pursuant to the Patent Cooperation Treaty.

6. A record in this system of records may be disclosed, as a routine use, to another federal agency for purposes of National Security review (35 U.S.C. 181) and for review pursuant to the Atomic Energy Act (42 U.S.C. 218(c)).

7. A record from this system of records may be disclosed, as a routine use, to the Administrator, General Services, or his/her designee, during an inspection of records conducted by GSA as part of that agency's responsibility to recommend improvements in records management practices and programs, under authority of 44 U.S.C. 2904 and 2906. Such disclosure shall be made in accordance with the GSA regulations governing inspection of records for this purpose, and any other relevant (i.e., GSA or Commerce) directive. Such disclosure shall not be used to make determinations about individuals.

8. A record from this system of records may be disclosed, as a routine use, to the public after either publication of the application pursuant to 35 U.S.C. 122(b) or issuance of a patent pursuant to 35 U.S.C. 151. Further, a record may be disclosed, subject to the limitations of 37 CFR 1.14, as a routine use, to the public if the record was filed in an application which became abandoned or in which the proceedings were terminated and which application is referenced by either a published application, an application open to public inspections or an issued patent.

9. A record from this system of records may be disclosed, as a routine use, to a Federal, State, or local law enforcement agency, if the USPTO becomes aware of a violation or potential violation of law or regulation.

UNITED STATES PATENT AND TRADEMARK OFFICE

Commissioner for Patents
United States Patent and Trademark Office
P.O. Box 1450
Alexandria, VA 22313-1450
www.uspto.gov

In re Patent No. 5369263
Issue Date: November 29,1994
Application No. 07970410
Filed: October 30,1992
Attorney Docket No. 13019-0150

:
:DECISION GRANTING PETITION
:UNDER 37 CFR 1.378(c)
:

This is a decision on the electronic petition, filed July 18,2007 ,under 37 CFR 1.378(c) to accept the unintentionally delayed payment of the 11.5 year maintenance fee for the above-identified patent.

The petition is GRANTED.

The maintenance fee is accepted, and the above-identified patent reinstated as of July 18,2007 . This decision also constitutes notice that the fee has been accepted. An electronic copy of the petition and this decision has been created as an entry in an Image File Wrapper. Nevertheless, petitioner should print and retain an independent copy

Telephone inquires related to this electronic decision should be directed to the Electronic Business Center at 1-866-217-9197.

Under the Paperwork Reduction Act of 1995, no persons are required to respond to a collection of information unless it displays valid OMB control number.

PETITION TO ACCEPT UNINTENTIONALLY DELAYED PAYMENT OF MAINTENANCE FEE IN AN EXPIRED PATENT (37 CFR 1.378(c))

Patent Number	Issue Date (YYYY-MM-DD)	Application Number	Filing Date (YYYY-MM-DD)	Docket Number (if applicable)
5275781	1994-01-04	07970488	1992-11-02	820701-1762

CAUTION: Maintenance fee (and surcharge, if any) payment must correctly identify: (1) the patent number and (2) the application number of the actual U.S. application leading to issuance of that patent to ensure the fee(s) is/are associated with the correct patent. 37 CFR 1.366(c) and (d).

SMALL ENTITY
☒ Patentee claims, or has previously claimed, small entity status. See 37 CFR 1.27.

LOSS OF ENTITLEMENT TO SMALL ENTITY STATUS
☐ Patentee is no longer entitled to small entity status. See 37 CFR 1.27(g)

NOT Small Entity			Small Entity		
	Fee	Code		Fee	Code
○	3 ½ year	(1551)	○	3 ½ year	(2551)
○	7 ½ year	(1552)	○	7 ½ year	(2552)
○	11 ½ year	(1553)	◉	11 ½ year	(2553)

SURCHARGE
The surcharge required by 37 CFR 1.20(i)(2) (Fee Code 1558) must be paid as a condition of accepting unintentionally delayed payment of the maintenance fee.

MAINTENANCE FEE (37 CFR 1.20(e)-(g))
The appropriate maintenance fee must be submitted with this petition.

STATEMENT
THE UNDERSIGNED CERTIFIES THAT THE DELAY IN PAYMENT OF THE MAINTENANCE FEE TO THIS PATENT WAS UNINTENTIONAL

PETITIONER(S) REQUEST THAT THE DELAYED PAYMENT OF THE MAINTENANCE FEE BE ACCEPTED AND THE PATENT REINSTATED

THIS PORTION MUST BE COMPLETED BY THE SIGNATORY OR SIGNATORIES

37 CFR 1.378(d) states: "Any petition under this section must be signed by an attorney or agent registered to practice before the Patent and Trademark Office, or by the patentee, the assignee, or other party in interest."

I certify, in accordance with 37 CFR 1.4(d)(4) that I am

◉ An attorney or agent registered to practice before the Patent and Trademark Office

○ A sole patentee

○ A joint patentee; I certify that I am authorized to sign this submission on behalf of all the other patentees.

○ A joint patentee; all of whom are signing this e-petition

○ The assignee of record of the entire interest

Patent Practitioner			
A signature of the applicant or representative is required in accordance with 37 CFR 1.33 and 10.18. Please see 37 CFR 1.4(d) for the form of the signature			
Signature	/todd deveau/	Date (YYYY-MM-DD)	2007-12-19
Name	Todd Deveau	Registration Number	29526

This collection of information is required by 37 CFR 1.378(c). The information is required to obtain or retain a benefit by the public which is to file (and by the USPTO to process) an application. Confidentiality is governed by 35 U.S.C. 122 and 37 CFR 1.11 and 1.14. This collection is estimated to take 1 hour to complete, including gathering, preparing, and submitting the completed application form to the USPTO. Time will vary depending upon the individual case. Any comments on the amount of time you require to complete this form and/ or suggestions for reducing this burden, should be sent to the Chief Information Officer, U.S. Patent and Trademark Office, U.S. Department of Commerce, P.O. Box 1450, Alexandria, VA 22313-1450. DO NOT SEND FEES OR COMPLETED FORMS TO THIS ADDRESS. **This form can only be used when in conjunction with EFS-Web. If this form is mailed to the USPTO, it may cause delays in reinstating the patent.**

Privacy Act Statement

The Privacy Act of 1974 (P.L. 93-579) requires that you be given certain information in connection with your submission of the attached form related to a patent application or patent. Accordingly, pursuant to the requirements of the Act, please be advised that: (1) the general authority for the collection of this information is 35 U.S.C. 2(b)(2); (2) furnishing of the information solicited is voluntary; and (3) the principal purpose for which the information is used by the U.S. Patent and Trademark Office is to process and/or examine your submission related to a patent application or patent. If you do not furnish the requested information, the U.S. Patent and Trademark Office may not be able to process and/or examine your submission, which may result in termination of proceedings or abandonment of the application or expiration of the patent.

The information provided by you in this form will be subject to the following routine uses:

1. The information on this form will be treated confidentially to the extent allowed under the Freedom of Information Act (5 U.S.C. 552) and the Privacy Act (5 U.S.C. 552a). Records from this system of records may be disclosed to the Department of Justice to determine whether the Freedom of Information Act requires disclosure of these record s.

2. A record from this system of records may be disclosed, as a routine use, in the course of presenting evidence to a court, magistrate, or administrative tribunal, including disclosures to opposing counsel in the course of settlement negotiations.

3. A record in this system of records may be disclosed, as a routine use, to a Member of Congress submitting a request involving an individual, to whom the record pertains, when the individual has requested assistance from the Member with respect to the subject matter of the record.

4. A record in this system of records may be disclosed, as a routine use, to a contractor of the Agency having need for the information in order to perform a contract. Recipients of information shall be required to comply with the requirements of the Privacy Act of 1974, as amended, pursuant to 5 U.S.C. 552a(m).

5. A record related to an International Application filed under the Patent Cooperation Treaty in this system of records may be disclosed, as a routine use, to the International Bureau of the World Intellectual Property Organization, pursuant to the Patent Cooperation Treaty.

6. A record in this system of records may be disclosed, as a routine use, to another federal agency for purposes of National Security review (35 U.S.C. 181) and for review pursuant to the Atomic Energy Act (42 U.S.C. 218(c)).

7. A record from this system of records may be disclosed, as a routine use, to the Administrator, General Services, or his/her designee, during an inspection of records conducted by GSA as part of that agency's responsibility to recommend improvements in records management practices and programs, under authority of 44 U.S.C. 2904 and 2906. Such disclosure shall be made in accordance with the GSA regulations governing inspection of records for this purpose, and any other relevant (i.e., GSA or Commerce) directive. Such disclosure shall not be used to make determinations about individuals.

8. A record from this system of records may be disclosed, as a routine use, to the public after either publication of the application pursuant to 35 U.S.C. 122(b) or issuance of a patent pursuant to 35 U.S.C. 151. Further, a record may be disclosed, subject to the limitations of 37 CFR 1.14, as a routine use, to the public if the record was filed in an application which became abandoned or in which the proceedings were terminated and which application is referenced by either a published application, an application open to public inspections or an issued patent.

9. A record from this system of records may be disclosed, as a routine use, to a Federal, State, or local law enforcement agency, if the USPTO becomes aware of a violation or potential violation of law or regulation.

UNITED STATES PATENT AND TRADEMARK OFFICE

Commissioner for Patents
United States Patent and Trademark Office
P.O. Box 1450
Alexandria, VA 22313-1450
www.uspto.gov

In re Patent No. 5275781
Issue Date: January 4,1994
Application No. 07970488
Filed: November 2,1992
Attorney Docket No. 10733-141

:
:DECISION GRANTING PETITION
:UNDER 37 CFR 1.378(c)
:

This is a decision on the electronic petition, filed December 19,2007 ,under 37 CFR 1.378(c) to accept the unintentionally delayed payment of the 11.5 year maintenance fee for the above-identified patent.

The petition is GRANTED.

The maintenance fee is accepted, and the above-identified patent reinstated as of December 19,2007. This decision also constitutes notice that the fee has been accepted. An electronic copy of the petition and this decision has been created as an entry in an Image File Wrapper. Nevertheless, petitioner should print and retain an independent copy

Telephone inquires related to this electronic decision should be directed to the Electronic Business Center at 1-866-217-9197.

Under the Paperwork Reduction Act of 1995, no persons are required to respond to a collection of information unless it displays valid OMB control number.

PETITION TO ACCEPT UNINTENTIONALLY DELAYED PAYMENT OF MAINTENANCE FEE IN AN EXPIRED PATENT (37 CFR 1.378(c))

Patent Number	Issue Date (YYYY-MM-DD)	Application Number	Filing Date (YYYY-MM-DD)	Docket Number (if applicable)
5310364	1994-05-10	07971053	1992-11-03	21729-0005

CAUTION: Maintenance fee (and surcharge, if any) payment must correctly identify: (1) the patent number and (2) the application number of the actual U.S. application leading to issuance of that patent to ensure the fee(s) is/are associated with the correct patent. 37 CFR 1.366(c) and (d).

SMALL ENTITY
☐ Patentee claims, or has previously claimed, small entity status. See 37 CFR 1.27.

LOSS OF ENTITLEMENT TO SMALL ENTITY STATUS
☐ Patentee is no longer entitled to small entity status. See 37 CFR 1.27(g)

NOT Small Entity			Small Entity		
	Fee	Code		Fee	Code
○	3 ½ year	(1551)	○	3 ½ year	(2551)
○	7 ½ year	(1552)	○	7 ½ year	(2552)
◉	11 ½ year	(1553)	○	11 ½ year	(2553)

SURCHARGE
The surcharge required by 37 CFR 1.20(i)(2) (Fee Code 1558) must be paid as a condition of accepting unintentionally delayed payment of the maintenance fee.

MAINTENANCE FEE (37 CFR 1.20(e)-(g))
The appropriate maintenance fee must be submitted with this petition.

STATEMENT
THE UNDERSIGNED CERTIFIES THAT THE DELAY IN PAYMENT OF THE MAINTENANCE FEE TO THIS PATENT WAS UNINTENTIONAL

PETITIONER(S) REQUEST THAT THE DELAYED PAYMENT OF THE MAINTENANCE FEE BE ACCEPTED AND THE PATENT REINSTATED

THIS PORTION MUST BE COMPLETED BY THE SIGNATORY OR SIGNATORIES

37 CFR 1.378(d) states: "Any petition under this section must be signed by an attorney or agent registered to practice before the Patent and Trademark Office, or by the patentee, the assignee, or other party in interest."

I certify, in accordance with 37 CFR 1.4(d)(4) that I am

◉ An attorney or agent registered to practice before the Patent and Trademark Office

○ A sole patentee

○ A joint patentee; I certify that I am authorized to sign this submission on behalf of all the other patentees.

○ A joint patentee; all of whom are signing this e-petition

○ The assignee of record of the entire interest

Patent Practitioner			
A signature of the applicant or representative is required in accordance with 37 CFR 1.33 and 10.18. Please see 37 CFR 1.4(d) for the form of the signature			
Signature	/K. Scott O'Brian/	Date (YYYY-MM-DD)	2007-02-13
Name	K. Scott O'Brian	Registration Number	42946

This collection of information is required by 37 CFR 1.378(c). The information is required to obtain or retain a benefit by the public which is to file (and by the USPTO to process) an application. Confidentiality is governed by 35 U.S.C. 122 and 37 CFR 1.11 and 1.14. This collection is estimated to take 1 hour to complete, including gathering, preparing, and submitting the completed application form to the USPTO. Time will vary depending upon the individual case. Any comments on the amount of time you require to complete this form and/ or suggestions for reducing this burden, should be sent to the Chief Information Officer, U.S. Patent and Trademark Office, U.S. Department of Commerce, P.O. Box 1450, Alexandria, VA 22313-1450. DO NOT SEND FEES OR COMPLETED FORMS TO THIS ADDRESS. **This form can only be used when in conjunction with EFS-Web. If this form is mailed to the USPTO, it may cause delays in reinstating the patent.**

Privacy Act Statement

The Privacy Act of 1974 (P.L. 93-579) requires that you be given certain information in connection with your submission of the attached form related to a patent application or patent. Accordingly, pursuant to the requirements of the Act, please be advised that: (1) the general authority for the collection of this information is 35 U.S.C. 2(b)(2); (2) furnishing of the information solicited is voluntary; and (3) the principal purpose for which the information is used by the U.S. Patent and Trademark Office is to process and/or examine your submission related to a patent application or patent. If you do not furnish the requested information, the U.S. Patent and Trademark Office may not be able to process and/or examine your submission, which may result in termination of proceedings or abandonment of the application or expiration of the patent.

The information provided by you in this form will be subject to the following routine uses:

1. The information on this form will be treated confidentially to the extent allowed under the Freedom of Information Act (5 U.S.C. 552) and the Privacy Act (5 U.S.C. 552a). Records from this system of records may be disclosed to the Department of Justice to determine whether the Freedom of Information Act requires disclosure of these record s.

2. A record from this system of records may be disclosed, as a routine use, in the course of presenting evidence to a court, magistrate, or administrative tribunal, including disclosures to opposing counsel in the course of settlement negotiations.

3. A record in this system of records may be disclosed, as a routine use, to a Member of Congress submitting a request involving an individual, to whom the record pertains, when the individual has requested assistance from the Member with respect to the subject matter of the record.

4. A record in this system of records may be disclosed, as a routine use, to a contractor of the Agency having need for the information in order to perform a contract. Recipients of information shall be required to comply with the requirements of the Privacy Act of 1974, as amended, pursuant to 5 U.S.C. 552a(m).

5. A record related to an International Application filed under the Patent Cooperation Treaty in this system of records may be disclosed, as a routine use, to the International Bureau of the World Intellectual Property Organization, pursuant to the Patent Cooperation Treaty.

6. A record in this system of records may be disclosed, as a routine use, to another federal agency for purposes of National Security review (35 U.S.C. 181) and for review pursuant to the Atomic Energy Act (42 U.S.C. 218(c)).

7. A record from this system of records may be disclosed, as a routine use, to the Administrator, General Services, or his/her designee, during an inspection of records conducted by GSA as part of that agency's responsibility to recommend improvements in records management practices and programs, under authority of 44 U.S.C. 2904 and 2906. Such disclosure shall be made in accordance with the GSA regulations governing inspection of records for this purpose, and any other relevant (i.e., GSA or Commerce) directive. Such disclosure shall not be used to make determinations about individuals.

8. A record from this system of records may be disclosed, as a routine use, to the public after either publication of the application pursuant to 35 U.S.C. 122(b) or issuance of a patent pursuant to 35 U.S.C. 151. Further, a record may be disclosed, subject to the limitations of 37 CFR 1.14, as a routine use, to the public if the record was filed in an application which became abandoned or in which the proceedings were terminated and which application is referenced by either a published application, an application open to public inspections or an issued patent.

9. A record from this system of records may be disclosed, as a routine use, to a Federal, State, or local law enforcement agency, if the USPTO becomes aware of a violation or potential violation of law or regulation.

UNITED STATES PATENT AND TRADEMARK OFFICE

Commissioner for Patents
United States Patent and Trademark Office
P.O. Box 1450
Alexandria, VA 22313-1450
www.uspto.gov

In re Patent No. 5310364
Issue Date: May 10,1994
Application No. 07971053
Filed: November 3,1992
Attorney Docket No. 002-923990-N

:
:DECISION GRANTING PETITION
:UNDER 37 CFR 1.378(c)
:

This is a decision on the electronic petition, filed February 13,2007 ,under 37 CFR 1.378(c) to accept the unintentionally delayed payment of the 11.5 year maintenance fee for the above-identified patent.

The petition is GRANTED.

The maintenance fee is accepted, and the above-identified patent reinstated as of February 13,2007 . This decision also constitutes notice that the fee has been accepted. An electronic copy of the petition and this decision has been created as an entry in an Image File Wrapper. Nevertheless, petitioner should print and retain an independent copy

Telephone inquires related to this electronic decision should be directed to the Electronic Business Center at 1-866-217-9197.

Under the Paperwork Reduction Act of 1995, no persons are required to respond to a collection of information unless it displays valid OMB control number.

PETITION TO ACCEPT UNINTENTIONALLY DELAYED PAYMENT OF MAINTENANCE FEE IN AN EXPIRED PATENT (37 CFR 1.378(c))

Patent Number	Issue Date (YYYY-MM-DD)	Application Number	Filing Date (YYYY-MM-DD)	Docket Number (if applicable)
5290197	1994-03-01	07974902	1992-11-12	ID 050306 -JLR

CAUTION: Maintenance fee (and surcharge, if any) payment must correctly identify: (1) the patent number and (2) the application number of the actual U.S. application leading to issuance of that patent to ensure the fee(s) is/are associated with the correct patent. 37 CFR 1.366(c) and (d).

SMALL ENTITY
☐ Patentee claims, or has previously claimed, small entity status. See 37 CFR 1.27.

LOSS OF ENTITLEMENT TO SMALL ENTITY STATUS
☐ Patentee is no longer entitled to small entity status. See 37 CFR 1.27(g)

NOT Small Entity		Small Entity	
Fee	Code	Fee	Code
○ 3 ½ year	(1551)	○ 3 ½ year	(2551)
○ 7 ½ year	(1552)	○ 7 ½ year	(2552)
◉ 11 ½ year	(1553)	○ 11 ½ year	(2553)

SURCHARGE
The surcharge required by 37 CFR 1.20(i)(2) (Fee Code 1558) must be paid as a condition of accepting unintentionally delayed payment of the maintenance fee.

MAINTENANCE FEE (37 CFR 1.20(e)-(g))
The appropriate maintenance fee must be submitted with this petition.

STATEMENT
THE UNDERSIGNED CERTIFIES THAT THE DELAY IN PAYMENT OF THE MAINTENANCE FEE TO THIS PATENT WAS UNINTENTIONAL

PETITIONER(S) REQUEST THAT THE DELAYED PAYMENT OF THE MAINTENANCE FEE BE ACCEPTED AND THE PATENT REINSTATED

THIS PORTION MUST BE COMPLETED BY THE SIGNATORY OR SIGNATORIES

37 CFR 1.378(d) states: "Any petition under this section must be signed by an attorney or agent registered to practice before the Patent and Trademark Office, or by the patentee, the assignee, or other party in interest."

I certify, in accordance with 37 CFR 1.4(d)(4) that I am

◉ An attorney or agent registered to practice before the Patent and Trademark Office

○ A sole patentee

○ A joint patentee; I certify that I am authorized to sign this submission on behalf of all the other patentees.

○ A joint patentee; all of whom are signing this e-petition

○ The assignee of record of the entire interest

Patent Practitioner			
A signature of the applicant or representative is required in accordance with 37 CFR 1.33 and 10.18. Please see 37 CFR 1.4(d) for the form of the signature			
Signature	/David J. Cushing/	Date (YYYY-MM-DD)	2006-10-27
Name	David J. Cushing	Registration Number	28703

This collection of information is required by 37 CFR 1.378(c). The information is required to obtain or retain a benefit by the public which is to file (and by the USPTO to process) an application. Confidentiality is governed by 35 U.S.C. 122 and 37 CFR 1.11 and 1.14. This collection is estimated to take 1 hour to complete, including gathering, preparing, and submitting the completed application form to the USPTO. Time will vary depending upon the individual case. Any comments on the amount of time you require to complete this form and/ or suggestions for reducing this burden, should be sent to the Chief Information Officer, U.S. Patent and Trademark Office, U.S. Department of Commerce, P.O. Box 1450, Alexandria, VA 22313-1450. DO NOT SEND FEES OR COMPLETED FORMS TO THIS ADDRESS. **This form can only be used when in conjunction with EFS-Web. If this form is mailed to the USPTO, it may cause delays in reinstating the patent.**

Privacy Act Statement

The Privacy Act of 1974 (P.L. 93-579) requires that you be given certain information in connection with your submission of the attached form related to a patent application or patent. Accordingly, pursuant to the requirements of the Act, please be advised that: (1) the general authority for the collection of this information is 35 U.S.C. 2(b)(2); (2) furnishing of the information solicited is voluntary; and (3) the principal purpose for which the information is used by the U.S. Patent and Trademark Office is to process and/or examine your submission related to a patent application or patent. If you do not furnish the requested information, the U.S. Patent and Trademark Office may not be able to process and/or examine your submission, which may result in termination of proceedings or abandonment of the application or expiration of the patent.

The information provided by you in this form will be subject to the following routine uses:

1. The information on this form will be treated confidentially to the extent allowed under the Freedom of Information Act (5 U.S.C. 552) and the Privacy Act (5 U.S.C. 552a). Records from this system of records may be disclosed to the Department of Justice to determine whether the Freedom of Information Act requires disclosure of these record s.

2. A record from this system of records may be disclosed, as a routine use, in the course of presenting evidence to a court, magistrate, or administrative tribunal, including disclosures to opposing counsel in the course of settlement negotiations.

3. A record in this system of records may be disclosed, as a routine use, to a Member of Congress submitting a request involving an individual, to whom the record pertains, when the individual has requested assistance from the Member with respect to the subject matter of the record.

4. A record in this system of records may be disclosed, as a routine use, to a contractor of the Agency having need for the information in order to perform a contract. Recipients of information shall be required to comply with the requirements of the Privacy Act of 1974, as amended, pursuant to 5 U.S.C. 552a(m).

5. A record related to an International Application filed under the Patent Cooperation Treaty in this system of records may be disclosed, as a routine use, to the International Bureau of the World Intellectual Property Organization, pursuant to the Patent Cooperation Treaty.

6. A record in this system of records may be disclosed, as a routine use, to another federal agency for purposes of National Security review (35 U.S.C. 181) and for review pursuant to the Atomic Energy Act (42 U.S.C. 218(c)).

7. A record from this system of records may be disclosed, as a routine use, to the Administrator, General Services, or his/her designee, during an inspection of records conducted by GSA as part of that agency's responsibility to recommend improvements in records management practices and programs, under authority of 44 U.S.C. 2904 and 2906. Such disclosure shall be made in accordance with the GSA regulations governing inspection of records for this purpose, and any other relevant (i.e., GSA or Commerce) directive. Such disclosure shall not be used to make determinations about individuals.

8. A record from this system of records may be disclosed, as a routine use, to the public after either publication of the application pursuant to 35 U.S.C. 122(b) or issuance of a patent pursuant to 35 U.S.C. 151. Further, a record may be disclosed, subject to the limitations of 37 CFR 1.14, as a routine use, to the public if the record was filed in an application which became abandoned or in which the proceedings were terminated and which application is referenced by either a published application, an application open to public inspections or an issued patent.

9. A record from this system of records may be disclosed, as a routine use, to a Federal, State, or local law enforcement agency, if the USPTO becomes aware of a violation or potential violation of law or regulation.

UNITED STATES PATENT AND TRADEMARK OFFICE

Commissioner for Patents
United States Patent and Trademark Office
P.O. Box 1450
Alexandria, VA 22313-1450
www.uspto.gov

In re Patent No. 5290197
Issue Date: March 1,1994
Application No. 07974902
Filed: November 12,1992
Attorney Docket No. 829-139

:
:DECISION GRANTING PETITION
:UNDER 37 CFR 1.378(c)
:

This is a decision on the electronic petition, filed October 27,2006 ,under 37 CFR 1.378(c) to accept the unintentionally delayed payment of the 11.5 year maintenance fee for the above-identified patent.

The petition is GRANTED.

The maintenance fee is accepted, and the above-identified patent reinstated as of October 27,2006 . This decision also constitutes notice that the fee has been accepted. An electronic copy of the petition and this decision has been created as an entry in an Image File Wrapper. Nevertheless, petitioner should print and retain an independent copy

Telephone inquires related to this electronic decision should be directed to the Electronic Business Center at 1-866-217-9197.

Under the Paperwork Reduction Act of 1995, no persons are required to respond to a collection of information unless it displays valid OMB control number.

PETITION TO ACCEPT UNINTENTIONALLY DELAYED PAYMENT OF MAINTENANCE FEE IN AN EXPIRED PATENT (37 CFR 1.378(c))

Patent Number	Issue Date (YYYY-MM-DD)	Application Number	Filing Date (YYYY-MM-DD)	Docket Number (if applicable)
5290197	1994-03-01	07974902	1992-11-12	ID 050306 -JLR

CAUTION: Maintenance fee (and surcharge, if any) payment must correctly identify: (1) the patent number and (2) the application number of the actual U.S. application leading to issuance of that patent to ensure the fee(s) is/are associated with the correct patent. 37 CFR 1.366(c) and (d).

SMALL ENTITY
☐ Patentee claims, or has previously claimed, small entity status. See 37 CFR 1.27.

LOSS OF ENTITLEMENT TO SMALL ENTITY STATUS
☐ Patentee is no longer entitled to small entity status. See 37 CFR 1.27(g)

NOT Small Entity		Small Entity	
Fee	Code	Fee	Code
○ 3 ½ year	(1551)	○ 3 ½ year	(2551)
○ 7 ½ year	(1552)	○ 7 ½ year	(2552)
◉ 11 ½ year	(1553)	○ 11 ½ year	(2553)

SURCHARGE
The surcharge required by 37 CFR 1.20(i)(2) (Fee Code 1558) must be paid as a condition of accepting unintentionally delayed payment of the maintenance fee.

MAINTENANCE FEE (37 CFR 1.20(e)-(g))
The appropriate maintenance fee must be submitted with this petition.

STATEMENT
THE UNDERSIGNED CERTIFIES THAT THE DELAY IN PAYMENT OF THE MAINTENANCE FEE TO THIS PATENT WAS UNINTENTIONAL

PETITIONER(S) REQUEST THAT THE DELAYED PAYMENT OF THE MAINTENANCE FEE BE ACCEPTED AND THE PATENT REINSTATED

THIS PORTION MUST BE COMPLETED BY THE SIGNATORY OR SIGNATORIES

37 CFR 1.378(d) states: "Any petition under this section must be signed by an attorney or agent registered to practice before the Patent and Trademark Office, or by the patentee, the assignee, or other party in interest."

I certify, in accordance with 37 CFR 1.4(d)(4) that I am

◉ An attorney or agent registered to practice before the Patent and Trademark Office

○ A sole patentee

○ A joint patentee; I certify that I am authorized to sign this submission on behalf of all the other patentees.

○ A joint patentee; all of whom are signing this e-petition

○ The assignee of record of the entire interest

Patent Practitioner			
A signature of the applicant or representative is required in accordance with 37 CFR 1.33 and 10.18. Please see 37 CFR 1.4(d) for the form of the signature			
Signature	/David J. Cushing/	Date (YYYY-MM-DD)	2006-10-27
Name	David J. Cushing	Registration Number	28703

This collection of information is required by 37 CFR 1.378(c). The information is required to obtain or retain a benefit by the public which is to file (and by the USPTO to process) an application. Confidentiality is governed by 35 U.S.C. 122 and 37 CFR 1.11 and 1.14. This collection is estimated to take 1 hour to complete, including gathering, preparing, and submitting the completed application form to the USPTO. Time will vary depending upon the individual case. Any comments on the amount of time you require to complete this form and/ or suggestions for reducing this burden, should be sent to the Chief Information Officer, U.S. Patent and Trademark Office, U.S. Department of Commerce, P.O. Box 1450, Alexandria, VA 22313-1450. DO NOT SEND FEES OR COMPLETED FORMS TO THIS ADDRESS. **This form can only be used when in conjunction with EFS-Web. If this form is mailed to the USPTO, it may cause delays in reinstating the patent.**

Privacy Act Statement

The Privacy Act of 1974 (P.L. 93-579) requires that you be given certain information in connection with your submission of the attached form related to a patent application or patent. Accordingly, pursuant to the requirements of the Act, please be advised that: (1) the general authority for the collection of this information is 35 U.S.C. 2(b)(2); (2) furnishing of the information solicited is voluntary; and (3) the principal purpose for which the information is used by the U.S. Patent and Trademark Office is to process and/or examine your submission related to a patent application or patent. If you do not furnish the requested information, the U.S. Patent and Trademark Office may not be able to process and/or examine your submission, which may result in termination of proceedings or abandonment of the application or expiration of the patent.

The information provided by you in this form will be subject to the following routine uses:

1. The information on this form will be treated confidentially to the extent allowed under the Freedom of Information Act (5 U.S.C. 552) and the Privacy Act (5 U.S.C. 552a). Records from this system of records may be disclosed to the Department of Justice to determine whether the Freedom of Information Act requires disclosure of these record s.

2. A record from this system of records may be disclosed, as a routine use, in the course of presenting evidence to a court, magistrate, or administrative tribunal, including disclosures to opposing counsel in the course of settlement negotiations.

3. A record in this system of records may be disclosed, as a routine use, to a Member of Congress submitting a request involving an individual, to whom the record pertains, when the individual has requested assistance from the Member with respect to the subject matter of the record.

4. A record in this system of records may be disclosed, as a routine use, to a contractor of the Agency having need for the information in order to perform a contract. Recipients of information shall be required to comply with the requirements of the Privacy Act of 1974, as amended, pursuant to 5 U.S.C. 552a(m).

5. A record related to an International Application filed under the Patent Cooperation Treaty in this system of records may be disclosed, as a routine use, to the International Bureau of the World Intellectual Property Organization, pursuant to the Patent Cooperation Treaty.

6. A record in this system of records may be disclosed, as a routine use, to another federal agency for purposes of National Security review (35 U.S.C. 181) and for review pursuant to the Atomic Energy Act (42 U.S.C. 218(c)).

7. A record from this system of records may be disclosed, as a routine use, to the Administrator, General Services, or his/her designee, during an inspection of records conducted by GSA as part of that agency's responsibility to recommend improvements in records management practices and programs, under authority of 44 U.S.C. 2904 and 2906. Such disclosure shall be made in accordance with the GSA regulations governing inspection of records for this purpose, and any other relevant (i.e., GSA or Commerce) directive. Such disclosure shall not be used to make determinations about individuals.

8. A record from this system of records may be disclosed, as a routine use, to the public after either publication of the application pursuant to 35 U.S.C. 122(b) or issuance of a patent pursuant to 35 U.S.C. 151. Further, a record may be disclosed, subject to the limitations of 37 CFR 1.14, as a routine use, to the public if the record was filed in an application which became abandoned or in which the proceedings were terminated and which application is referenced by either a published application, an application open to public inspections or an issued patent.

9. A record from this system of records may be disclosed, as a routine use, to a Federal, State, or local law enforcement agency, if the USPTO becomes aware of a violation or potential violation of law or regulation.

Under the Paperwork Reduction Act of 1995, no persons are required to respond to a collection of information unless it displays valid OMB control number.

PETITION TO ACCEPT UNINTENTIONALLY DELAYED PAYMENT OF MAINTENANCE FEE IN AN EXPIRED PATENT (37 CFR 1.378(c))

Patent Number	Issue Date (YYYY-MM-DD)	Application Number	Filing Date (YYYY-MM-DD)	Docket Number (if applicable)
5792852	1998-08-11	07977696	1992-11-16	SOMA1140

CAUTION: Maintenance fee (and surcharge, if any) payment must correctly identify: (1) the patent number and (2) the application number of the actual U.S. application leading to issuance of that patent to ensure the fee(s) is/are associated with the correct patent. 37 CFR 1.366(c) and (d).

SMALL ENTITY
☒ Patentee claims, or has previously claimed, small entity status. See 37 CFR 1.27.

LOSS OF ENTITLEMENT TO SMALL ENTITY STATUS
☐ Patentee is no longer entitled to small entity status. See 37 CFR 1.27(g)

NOT Small Entity		Small Entity	
Fee	Code	Fee	Code
○ 3 ½ year	(1551)	○ 3 ½ year	(2551)
○ 7 ½ year	(1552)	◉ 7 ½ year	(2552)
○ 11 ½ year	(1553)	○ 11 ½ year	(2553)

SURCHARGE
The surcharge required by 37 CFR 1.20(i)(2) (Fee Code 1558) must be paid as a condition of accepting unintentionally delayed payment of the maintenance fee.

MAINTENANCE FEE (37 CFR 1.20(e)-(g))
The appropriate maintenance fee must be submitted with this petition.

STATEMENT
THE UNDERSIGNED CERTIFIES THAT THE DELAY IN PAYMENT OF THE MAINTENANCE FEE TO THIS PATENT WAS UNINTENTIONAL

PETITIONER(S) REQUEST THAT THE DELAYED PAYMENT OF THE MAINTENANCE FEE BE ACCEPTED AND THE PATENT REINSTATED

THIS PORTION MUST BE COMPLETED BY THE SIGNATORY OR SIGNATORIES

37 CFR 1.378(d) states: "Any petition under this section must be signed by an attorney or agent registered to practice before the Patent and Trademark Office, or by the patentee, the assignee, or other party in interest."

I certify, in accordance with 37 CFR 1.4(d)(4) that I am

◉ An attorney or agent registered to practice before the Patent and Trademark Office

○ A sole patentee

○ A joint patentee; I certify that I am authorized to sign this submission on behalf of all the other patentees.

○ A joint patentee; all of whom are signing this e-petition

○ The assignee of record of the entire interest

Patent Practitioner			
A signature of the applicant or representative is required in accordance with 37 CFR 1.33 and 10.18. Please see 37 CFR 1.4(d) for the form of the signature			
Signature	/lah/	Date (YYYY-MM-DD)	2007-04-10
Name	Lisa A. Haile, J.D., Ph.D.	Registration Number	38347

This collection of information is required by 37 CFR 1.378(c). The information is required to obtain or retain a benefit by the public which is to file (and by the USPTO to process) an application. Confidentiality is governed by 35 U.S.C. 122 and 37 CFR 1.11 and 1.14. This collection is estimated to take 1 hour to complete, including gathering, preparing, and submitting the completed application form to the USPTO. Time will vary depending upon the individual case. Any comments on the amount of time you require to complete this form and/ or suggestions for reducing this burden, should be sent to the Chief Information Officer, U.S. Patent and Trademark Office, U.S. Department of Commerce, P.O. Box 1450, Alexandria, VA 22313-1450. DO NOT SEND FEES OR COMPLETED FORMS TO THIS ADDRESS. **This form can only be used when in conjunction with EFS-Web. If this form is mailed to the USPTO, it may cause delays in reinstating the patent.**

Privacy Act Statement

The Privacy Act of 1974 (P.L. 93-579) requires that you be given certain information in connection with your submission of the attached form related to a patent application or patent. Accordingly, pursuant to the requirements of the Act, please be advised that: (1) the general authority for the collection of this information is 35 U.S.C. 2(b)(2); (2) furnishing of the information solicited is voluntary; and (3) the principal purpose for which the information is used by the U.S. Patent and Trademark Office is to process and/or examine your submission related to a patent application or patent. If you do not furnish the requested information, the U.S. Patent and Trademark Office may not be able to process and/or examine your submission, which may result in termination of proceedings or abandonment of the application or expiration of the patent.

The information provided by you in this form will be subject to the following routine uses:

1. The information on this form will be treated confidentially to the extent allowed under the Freedom of Information Act (5 U.S.C. 552) and the Privacy Act (5 U.S.C. 552a). Records from this system of records may be disclosed to the Department of Justice to determine whether the Freedom of Information Act requires disclosure of these record s.

2. A record from this system of records may be disclosed, as a routine use, in the course of presenting evidence to a court, magistrate, or administrative tribunal, including disclosures to opposing counsel in the course of settlement negotiations.

3. A record in this system of records may be disclosed, as a routine use, to a Member of Congress submitting a request involving an individual, to whom the record pertains, when the individual has requested assistance from the Member with respect to the subject matter of the record.

4. A record in this system of records may be disclosed, as a routine use, to a contractor of the Agency having need for the information in order to perform a contract. Recipients of information shall be required to comply with the requirements of the Privacy Act of 1974, as amended, pursuant to 5 U.S.C. 552a(m).

5. A record related to an International Application filed under the Patent Cooperation Treaty in this system of records may be disclosed, as a routine use, to the International Bureau of the World Intellectual Property Organization, pursuant to the Patent Cooperation Treaty.

6. A record in this system of records may be disclosed, as a routine use, to another federal agency for purposes of National Security review (35 U.S.C. 181) and for review pursuant to the Atomic Energy Act (42 U.S.C. 218(c)).

7. A record from this system of records may be disclosed, as a routine use, to the Administrator, General Services, or his/her designee, during an inspection of records conducted by GSA as part of that agency's responsibility to recommend improvements in records management practices and programs, under authority of 44 U.S.C. 2904 and 2906. Such disclosure shall be made in accordance with the GSA regulations governing inspection of records for this purpose, and any other relevant (i.e., GSA or Commerce) directive. Such disclosure shall not be used to make determinations about individuals.

8. A record from this system of records may be disclosed, as a routine use, to the public after either publication of the application pursuant to 35 U.S.C. 122(b) or issuance of a patent pursuant to 35 U.S.C. 151. Further, a record may be disclosed, subject to the limitations of 37 CFR 1.14, as a routine use, to the public if the record was filed in an application which became abandoned or in which the proceedings were terminated and which application is referenced by either a published application, an application open to public inspections or an issued patent.

9. A record from this system of records may be disclosed, as a routine use, to a Federal, State, or local law enforcement agency, if the USPTO becomes aware of a violation or potential violation of law or regulation.

UNITED STATES PATENT AND TRADEMARK OFFICE

Commissioner for Patents
United States Patent and Trademark Office
P.O. Box 1450
Alexandria, VA 22313-1450
www.uspto.gov

In re Patent No. 5792852
Issue Date: August 11,1998
Application No. 07977696
Filed: November 16,1992
Attorney Docket No. CRFC00082

:
:DECISION GRANTING PETITION
:UNDER 37 CFR 1.378(c)
:

This is a decision on the electronic petition, filed April 10,2007 ,under 37 CFR 1.378(c) to accept the unintentionally delayed payment of the 7.5 year maintenance fee for the above-identified patent.

The petition is GRANTED.

The maintenance fee is accepted, and the above-identified patent reinstated as of April 10,2007 . This decision also constitutes notice that the fee has been accepted. An electronic copy of the petition and this decision has been created as an entry in an Image File Wrapper. Nevertheless, petitioner should print and retain an independent copy

Telephone inquires related to this electronic decision should be directed to the Electronic Business Center at 1-866-217-9197.

Under the Paperwork Reduction Act of 1995, no persons are required to respond to a collection of information unless it displays valid OMB control number.

PETITION TO ACCEPT UNINTENTIONALLY DELAYED PAYMENT OF MAINTENANCE FEE IN AN EXPIRED PATENT (37 CFR 1.378(c))

Patent Number	Issue Date (YYYY-MM-DD)	Application Number	Filing Date (YYYY-MM-DD)	Docket Number (if applicable)
5457630	1995-10-10	07978347	1992-11-18	PAD-081032

CAUTION: Maintenance fee (and surcharge, if any) payment must correctly identify: (1) the patent number and (2) the application number of the actual U.S. application leading to issuance of that patent to ensure the fee(s) is/are associated with the correct patent. 37 CFR 1.366(c) and (d).

SMALL ENTITY
☒ Patentee claims, or has previously claimed, small entity status. See 37 CFR 1.27.

LOSS OF ENTITLEMENT TO SMALL ENTITY STATUS
☐ Patentee is no longer entitled to small entity status. See 37 CFR 1.27(g)

NOT Small Entity			Small Entity		
	Fee	Code		Fee	Code
○	3 ½ year	(1551)	○	3 ½ year	(2551)
○	7 ½ year	(1552)	○	7 ½ year	(2552)
○	11 ½ year	(1553)	◉	11 ½ year	(2553)

SURCHARGE
The surcharge required by 37 CFR 1.20(i)(2) (Fee Code 1558) must be paid as a condition of accepting unintentionally delayed payment of the maintenance fee.

MAINTENANCE FEE (37 CFR 1.20(e)-(g))
The appropriate maintenance fee must be submitted with this petition.

STATEMENT
THE UNDERSIGNED CERTIFIES THAT THE DELAY IN PAYMENT OF THE MAINTENANCE FEE TO THIS PATENT WAS UNINTENTIONAL

PETITIONER(S) REQUEST THAT THE DELAYED PAYMENT OF THE MAINTENANCE FEE BE ACCEPTED AND THE PATENT REINSTATED

THIS PORTION MUST BE COMPLETED BY THE SIGNATORY OR SIGNATORIES

37 CFR 1.378(d) states: "Any petition under this section must be signed by an attorney or agent registered to practice before the Patent and Trademark Office, or by the patentee, the assignee, or other party in interest."

I certify, in accordance with 37 CFR 1.4(d)(4) that I am

◉ An attorney or agent registered to practice before the Patent and Trademark Office

○ A sole patentee

○ A joint patentee; I certify that I am authorized to sign this submission on behalf of all the other patentees.

○ A joint patentee; all of whom are signing this e-petition

○ The assignee of record of the entire interest

Patent Practitioner			
A signature of the applicant or representative is required in accordance with 37 CFR 1.33 and 10.18. Please see 37 CFR 1.4(d) for the form of the signature			
Signature	/Micheal D. Lake/	Date (YYYY-MM-DD)	2008-02-27
Name	Micheal D. Lake	Registration Number	33727

This collection of information is required by 37 CFR 1.378(c). The information is required to obtain or retain a benefit by the public which is to file (and by the USPTO to process) an application. Confidentiality is governed by 35 U.S.C. 122 and 37 CFR 1.11 and 1.14. This collection is estimated to take 1 hour to complete, including gathering, preparing, and submitting the completed application form to the USPTO. Time will vary depending upon the individual case. Any comments on the amount of time you require to complete this form and/ or suggestions for reducing this burden, should be sent to the Chief Information Officer, U.S. Patent and Trademark Office, U.S. Department of Commerce, P.O. Box 1450, Alexandria, VA 22313-1450. DO NOT SEND FEES OR COMPLETED FORMS TO THIS ADDRESS. **This form can only be used when in conjunction with EFS-Web. If this form is mailed to the USPTO, it may cause delays in reinstating the patent.**

Privacy Act Statement

The Privacy Act of 1974 (P.L. 93-579) requires that you be given certain information in connection with your submission of the attached form related to a patent application or patent. Accordingly, pursuant to the requirements of the Act, please be advised that: (1) the general authority for the collection of this information is 35 U.S.C. 2(b)(2); (2) furnishing of the information solicited is voluntary; and (3) the principal purpose for which the information is used by the U.S. Patent and Trademark Office is to process and/or examine your submission related to a patent application or patent. If you do not furnish the requested information, the U.S. Patent and Trademark Office may not be able to process and/or examine your submission, which may result in termination of proceedings or abandonment of the application or expiration of the patent.

The information provided by you in this form will be subject to the following routine uses:

1. The information on this form will be treated confidentially to the extent allowed under the Freedom of Information Act (5 U.S.C. 552) and the Privacy Act (5 U.S.C. 552a). Records from this system of records may be disclosed to the Department of Justice to determine whether the Freedom of Information Act requires disclosure of these record s.

2. A record from this system of records may be disclosed, as a routine use, in the course of presenting evidence to a court, magistrate, or administrative tribunal, including disclosures to opposing counsel in the course of settlement negotiations.

3. A record in this system of records may be disclosed, as a routine use, to a Member of Congress submitting a request involving an individual, to whom the record pertains, when the individual has requested assistance from the Member with respect to the subject matter of the record.

4. A record in this system of records may be disclosed, as a routine use, to a contractor of the Agency having need for the information in order to perform a contract. Recipients of information shall be required to comply with the requirements of the Privacy Act of 1974, as amended, pursuant to 5 U.S.C. 552a(m).

5. A record related to an International Application filed under the Patent Cooperation Treaty in this system of records may be disclosed, as a routine use, to the International Bureau of the World Intellectual Property Organization, pursuant to the Patent Cooperation Treaty.

6. A record in this system of records may be disclosed, as a routine use, to another federal agency for purposes of National Security review (35 U.S.C. 181) and for review pursuant to the Atomic Energy Act (42 U.S.C. 218(c)).

7. A record from this system of records may be disclosed, as a routine use, to the Administrator, General Services, or his/her designee, during an inspection of records conducted by GSA as part of that agency's responsibility to recommend improvements in records management practices and programs, under authority of 44 U.S.C. 2904 and 2906. Such disclosure shall be made in accordance with the GSA regulations governing inspection of records for this purpose, and any other relevant (i.e., GSA or Commerce) directive. Such disclosure shall not be used to make determinations about individuals.

8. A record from this system of records may be disclosed, as a routine use, to the public after either publication of the application pursuant to 35 U.S.C. 122(b) or issuance of a patent pursuant to 35 U.S.C. 151. Further, a record may be disclosed, subject to the limitations of 37 CFR 1.14, as a routine use, to the public if the record was filed in an application which became abandoned or in which the proceedings were terminated and which application is referenced by either a published application, an application open to public inspections or an issued patent.

9. A record from this system of records may be disclosed, as a routine use, to a Federal, State, or local law enforcement agency, if the USPTO becomes aware of a violation or potential violation of law or regulation.

UNITED STATES PATENT AND TRADEMARK OFFICE

Commissioner for Patents
United States Patent and Trademark Office
P.O. Box 1450
Alexandria, VA 22313-1450
www.uspto.gov

In re Patent No. 5457630
Issue Date: October 10,1995
Application No. 07978347
Filed: November 18,1992
Attorney Docket No. 227-P-008

:
:DECISION GRANTING PETITION
:UNDER 37 CFR 1.378(c)
:

This is a decision on the electronic petition, filed February 27,2008 ,under 37 CFR 1.378(c) to accept the unintentionally delayed payment of the 11.5 year maintenance fee for the above-identified patent.

The petition is GRANTED.

The maintenance fee is accepted, and the above-identified patent reinstated as of February 27,2008 . This decision also constitutes notice that the fee has been accepted. An electronic copy of the petition and this decision has been created as an entry in an Image File Wrapper. Nevertheless, petitioner should print and retain an independent copy

Telephone inquires related to this electronic decision should be directed to the Electronic Business Center at 1-866-217-9197.

UNITED STATES DEPARTMENT OF COMMERCE
Patent and Trademark Office
ASSISTANT SECRETARY OF COMMERCE AND
COMMISSIONER OF PATENTS AND TRADEMARKS
Washington, DC 20231

1/22/08

Patent No. :5324732
Inventor(s) : Schoen et al.
Issued : 6/28/2007
Title : CRYSTALLINE FUMARIC ACID SALTS OF 9,9-ALKYLENEN-3, 7 DIAZABICYCLONONANE COMPOUNDS AND PHARMACEUTICAL COMPOSITIONS CONTAINING THEM
Attydc./File No.

Request for Certificates of Correction

Consideration has been given to your request for the issuance of a Certificate of Correction, for the above – identified patent under the provisions of CFR 1.322.

Inspection of the application for the patent reveals that col. 2, col. 3, Claim 1, & 6 is printed with the record. Being no fault on the Patent and Trademark Office, It has no authority to issue a certificate of correction under the provision of 1.322.

In view of the forgoing, your request in this matter, is hereby denied.

Future written correspondence concerning this matter should be filed and directed to Decisions & Certificates of Correction Branch.

Henry Randall
Cecelia Newman
Decisions & Certificates
of Correction Branch
(703) 308-9390 Ext. 108

MAYER BROWN ROWE & MAW
P.O. BOX 2828
CHICAGO, IL 60690-2828

HR/CBN

UNITED STATES DEPARTMENT OF COMMERCE
Patent and Trademark Office
ASSISTANT SECRETARY AND COMMISSIONER
OF PATENTS AND TRADEMARKS
Washington, D.C. 20231

Paper No. 35

JAMES B. RADEN
JONES, DAY, REAVIS & POGUE
77 WEST WACKER DRIVE
CHICAGO, IL 60601-1692

COPY MAILED

DEC 19 2000

OFFICE OF PETITIONS
A/C PATENTS

In re Patent No. 5287270 :
Issue Date: February 15, 1994 :
Application No. 07/984,374 :NOTICE
Filed: December 2, 1992 :

This is a notice regarding your request for acceptance of a fee deficiency submission under 37 CFR 1.28. On September 1, 1998, the Court of Appeals for the Federal Circuit held that 37 CFR 1.28(c) is the sole provision governing the time for correction of the erroneous payment of the issue fee as a small entity. See DH Technology v. Synergystex International, Inc.. No. 97-1128, -1280, -1453, 1998 U.S. App. LEXIS 21409, at *30 (Fed. Cir. Sept. 1, 1998). Therefore, your fee deficiency submission under 37 CFR 1.28 is hereby **ACCEPTED**.

Inquiries related to this communication should be directed to the Office of Petitions Staff at (703) 305-9285.

This file is being forwarded to the Files Repository.

Irvin Dingle
Petitions Examiner
Office of Petitions
Office of the Deputy Assistant Commissioner
for Patent Policy and Projects

UNITED STATES PATENT AND TRADEMARK OFFICE

Commissioner for Patents
United States Patent and Trademark Office
P.O. Box 1450
Alexandria, VA 22313-1450
www.uspto.gov

In re Patent No. 5307299
Issue Date: April 26,1994
Application No. 07988095
Filed: December 9,1992
Attorney Docket No. 18767

:
:DECISION GRANTING PETITION
:UNDER 37 CFR 1.378(c)
:

This is a decision on the electronic petition, filed September 13,2007,under 37 CFR 1.378(c) to accept the unintentionally delayed payment of the 11.5 year maintenance fee for the above-identified patent.

The petition is GRANTED.

The maintenance fee is accepted, and the above-identified patent reinstated as of September 13,2007. This decision also constitutes notice that the fee has been accepted. An electronic copy of the petition and this decision has been created as an entry in an Image File Wrapper. Nevertheless, petitioner should print and retain an independent copy

Telephone inquires related to this electronic decision should be directed to the Electronic Business Center at 1-866-217-9197.

Under the Paperwork Reduction Act of 1995, no persons are required to respond to a collection of information unless it displays valid OMB control number.

PETITION TO ACCEPT UNINTENTIONALLY DELAYED PAYMENT OF MAINTENANCE FEE IN AN EXPIRED PATENT (37 CFR 1.378(c))

Patent Number	Issue Date (YYYY-MM-DD)	Application Number	Filing Date (YYYY-MM-DD)	Docket Number (if applicable)
5307299	1994-04-26	07988095	1992-12-09	BSSPT31

CAUTION: Maintenance fee (and surcharge, if any) payment must correctly identify: (1) the patent number and (2) the application number of the actual U.S. application leading to issuance of that patent to ensure the fee(s) is/are associated with the correct patent. 37 CFR 1.366(c) and (d).

SMALL ENTITY
☐ Patentee claims, or has previously claimed, small entity status. See 37 CFR 1.27.

LOSS OF ENTITLEMENT TO SMALL ENTITY STATUS
☐ Patentee is no longer entitled to small entity status. See 37 CFR 1.27(g)

NOT Small Entity			Small Entity		
	Fee	Code		Fee	Code
○	3 ½ year	(1551)	○	3 ½ year	(2551)
○	7 ½ year	(1552)	○	7 ½ year	(2552)
◉	11 ½ year	(1553)	○	11 ½ year	(2553)

SURCHARGE
The surcharge required by 37 CFR 1.20(i)(2) (Fee Code 1558) must be paid as a condition of accepting unintentionally delayed payment of the maintenance fee.

MAINTENANCE FEE (37 CFR 1.20(e)-(g))
The appropriate maintenance fee must be submitted with this petition.

STATEMENT
THE UNDERSIGNED CERTIFIES THAT THE DELAY IN PAYMENT OF THE MAINTENANCE FEE TO THIS PATENT WAS UNINTENTIONAL

PETITIONER(S) REQUEST THAT THE DELAYED PAYMENT OF THE MAINTENANCE FEE BE ACCEPTED AND THE PATENT REINSTATED

THIS PORTION MUST BE COMPLETED BY THE SIGNATORY OR SIGNATORIES

37 CFR 1.378(d) states: "Any petition under this section must be signed by an attorney or agent registered to practice before the Patent and Trademark Office, or by the patentee, the assignee, or other party in interest."

I certify, in accordance with 37 CFR 1.4(d)(4) that I am

◉ An attorney or agent registered to practice before the Patent and Trademark Office

○ A sole patentee

○ A joint patentee; I certify that I am authorized to sign this submission on behalf of all the other patentees.

○ A joint patentee; all of whom are signing this e-petition

○ The assignee of record of the entire interest

Patent Practitioner			
A signature of the applicant or representative is required in accordance with 37 CFR 1.33 and 10.18. Please see 37 CFR 1.4(d) for the form of the signature			
Signature	/thomas champagne/	Date (YYYY-MM-DD)	2007-09-13
Name	Thomas Champagne	Registration Number	36478

This collection of information is required by 37 CFR 1.378(c). The information is required to obtain or retain a benefit by the public which is to file (and by the USPTO to process) an application. Confidentiality is governed by 35 U.S.C. 122 and 37 CFR 1.11 and 1.14. This collection is estimated to take 1 hour to complete, including gathering, preparing, and submitting the completed application form to the USPTO. Time will vary depending upon the individual case. Any comments on the amount of time you require to complete this form and/ or suggestions for reducing this burden, should be sent to the Chief Information Officer, U.S. Patent and Trademark Office, U.S. Department of Commerce, P.O. Box 1450, Alexandria, VA 22313-1450. DO NOT SEND FEES OR COMPLETED FORMS TO THIS ADDRESS. **This form can only be used when in conjunction with EFS-Web. If this form is mailed to the USPTO, it may cause delays in reinstating the patent.**

Privacy Act Statement

The Privacy Act of 1974 (P.L. 93-579) requires that you be given certain information in connection with your submission of the attached form related to a patent application or patent. Accordingly, pursuant to the requirements of the Act, please be advised that: (1) the general authority for the collection of this information is 35 U.S.C. 2(b)(2); (2) furnishing of the information solicited is voluntary; and (3) the principal purpose for which the information is used by the U.S. Patent and Trademark Office is to process and/or examine your submission related to a patent application or patent. If you do not furnish the requested information, the U.S. Patent and Trademark Office may not be able to process and/or examine your submission, which may result in termination of proceedings or abandonment of the application or expiration of the patent.

The information provided by you in this form will be subject to the following routine uses:

1. The information on this form will be treated confidentially to the extent allowed under the Freedom of Information Act (5 U.S.C. 552) and the Privacy Act (5 U.S.C. 552a). Records from this system of records may be disclosed to the Department of Justice to determine whether the Freedom of Information Act requires disclosure of these record s.

2. A record from this system of records may be disclosed, as a routine use, in the course of presenting evidence to a court, magistrate, or administrative tribunal, including disclosures to opposing counsel in the course of settlement negotiations.

3. A record in this system of records may be disclosed, as a routine use, to a Member of Congress submitting a request involving an individual, to whom the record pertains, when the individual has requested assistance from the Member with respect to the subject matter of the record.

4. A record in this system of records may be disclosed, as a routine use, to a contractor of the Agency having need for the information in order to perform a contract. Recipients of information shall be required to comply with the requirements of the Privacy Act of 1974, as amended, pursuant to 5 U.S.C. 552a(m).

5. A record related to an International Application filed under the Patent Cooperation Treaty in this system of records may be disclosed, as a routine use, to the International Bureau of the World Intellectual Property Organization, pursuant to the Patent Cooperation Treaty.

6. A record in this system of records may be disclosed, as a routine use, to another federal agency for purposes of National Security review (35 U.S.C. 181) and for review pursuant to the Atomic Energy Act (42 U.S.C. 218(c)).

7. A record from this system of records may be disclosed, as a routine use, to the Administrator, General Services, or his/her designee, during an inspection of records conducted by GSA as part of that agency's responsibility to recommend improvements in records management practices and programs, under authority of 44 U.S.C. 2904 and 2906. Such disclosure shall be made in accordance with the GSA regulations governing inspection of records for this purpose, and any other relevant (i.e., GSA or Commerce) directive. Such disclosure shall not be used to make determinations about individuals.

8. A record from this system of records may be disclosed, as a routine use, to the public after either publication of the application pursuant to 35 U.S.C. 122(b) or issuance of a patent pursuant to 35 U.S.C. 151. Further, a record may be disclosed, subject to the limitations of 37 CFR 1.14, as a routine use, to the public if the record was filed in an application which became abandoned or in which the proceedings were terminated and which application is referenced by either a published application, an application open to public inspections or an issued patent.

9. A record from this system of records may be disclosed, as a routine use, to a Federal, State, or local law enforcement agency, if the USPTO becomes aware of a violation or potential violation of law or regulation.

Under the Paperwork Reduction Act of 1995, no persons are required to respond to a collection of information unless it displays valid OMB control number.

PETITION TO ACCEPT UNINTENTIONALLY DELAYED PAYMENT OF MAINTENANCE FEE IN AN EXPIRED PATENT (37 CFR 1.378(c))

Patent Number	Issue Date (YYYY-MM-DD)	Application Number	Filing Date (YYYY-MM-DD)	Docket Number (if applicable)
5,306,372	1994-04-26	07/989,759	1992-12-14	

CAUTION: Maintenance fee (and surcharge, if any) payment must correctly identify: (1) the patent number and (2) the application number of the actual U.S. application leading to issuance of that patent to ensure the fee(s) is/are associated with the correct patent. 37 CFR 1.366(c) and (d).

SMALL ENTITY
☒ Patentee claims, or has previously claimed, small entity status. See 37 CFR 1.27.

LOSS OF ENTITLEMENT TO SMALL ENTITY STATUS
☐ Patentee is no longer entitled to small entity status. See 37 CFR 1.27(g)

NOT Small Entity			Small Entity		
	Fee	Code		Fee	Code
○	3 ½ year	(1551)	○	3 ½ year	(2551)
○	7 ½ year	(1552)	○	7 ½ year	(2552)
○	11 ½ year	(1553)	◉	11 ½ year	(2553)

SURCHARGE
The surcharge required by 37 CFR 1.20(i)(2) (Fee Code 1558) must be paid as a condition of accepting unintentionally delayed payment of the maintenance fee.

MAINTENANCE FEE (37 CFR 1.20(e)-(g))
The appropriate maintenance fee must be submitted with this petition.

STATEMENT
THE UNDERSIGNED CERTIFIES THAT THE DELAY IN PAYMENT OF THE MAINTENANCE FEE TO THIS PATENT WAS UNINTENTIONAL

PETITIONER(S) REQUEST THAT THE DELAYED PAYMENT OF THE MAINTENANCE FEE BE ACCEPTED AND THE PATENT REINSTATED

THIS PORTION MUST BE COMPLETED BY THE SIGNATORY OR SIGNATORIES

37 CFR 1.378(d) states: "Any petition under this section must be signed by an attorney or agent registered to practice before the Patent and Trademark Office, or by the patentee, the assignee, or other party in interest."

I certify, in accordance with 37 CFR 1.4(d)(4) that I am

○ An attorney or agent registered to practice before the Patent and Trademark Office

○ A sole patentee

○ A joint patentee; I certify that I am authorized to sign this submission on behalf of all the other patentees.

◉ A joint patentee; all of whom are signing this e-petition

○ The assignee of record of the entire interest

A Joint Patentee, all of whom are signing this petition			
A signature of the applicant or representative is required in accordance with 37 CFR 1.33 and 10.18. Please see 37 CFR 1.4(d) for the form of the signature			
Patentee 1		Remove	
Signature	/NancyEHall/	Date (YYYY-MM-DD)	2008-04-21
Name	Nancy E. Hall		
Patentee 2		Remove	
Signature	/RobertCEconomos/	Date (YYYY-MM-DD)	2008-04-21
Name	Robert C Economos		
Additional Patentees may be generated within this form by selecting the Add Button		Add	

This collection of information is required by 37 CFR 1.378(c). The information is required to obtain or retain a benefit by the public which is to file (and by the USPTO to process) an application. Confidentiality is governed by 35 U.S.C. 122 and 37 CFR 1.11 and 1.14. This collection is estimated to take 1 hour to complete, including gathering, preparing, and submitting the completed application form to the USPTO. Time will vary depending upon the individual case. Any comments on the amount of time you require to complete this form and/or suggestions for reducing this burden, should be sent to the Chief Information Officer, U.S. Patent and Trademark Office, U.S. Department of Commerce, P.O. Box 1450, Alexandria, VA 22313-1450. DO NOT SEND FEES OR COMPLETED FORMS TO THIS ADDRESS. **This form can only be used when in conjunction with EFS-Web. If this form is mailed to the USPTO, it may cause delays in reinstating the patent.**

Privacy Act Statement

The Privacy Act of 1974 (P.L. 93-579) requires that you be given certain information in connection with your submission of the attached form related to a patent application or patent. Accordingly, pursuant to the requirements of the Act, please be advised that: (1) the general authority for the collection of this information is 35 U.S.C. 2(b)(2); (2) furnishing of the information solicited is voluntary; and (3) the principal purpose for which the information is used by the U.S. Patent and Trademark Office is to process and/or examine your submission related to a patent application or patent. If you do not furnish the requested information, the U.S. Patent and Trademark Office may not be able to process and/or examine your submission, which may result in termination of proceedings or abandonment of the application or expiration of the patent.

The information provided by you in this form will be subject to the following routine uses:

1. The information on this form will be treated confidentially to the extent allowed under the Freedom of Information Act (5 U.S.C. 552) and the Privacy Act (5 U.S.C. 552a). Records from this system of records may be disclosed to the Department of Justice to determine whether the Freedom of Information Act requires disclosure of these record s.

2. A record from this system of records may be disclosed, as a routine use, in the course of presenting evidence to a court, magistrate, or administrative tribunal, including disclosures to opposing counsel in the course of settlement negotiations.

3. A record in this system of records may be disclosed, as a routine use, to a Member of Congress submitting a request involving an individual, to whom the record pertains, when the individual has requested assistance from the Member with respect to the subject matter of the record.

4. A record in this system of records may be disclosed, as a routine use, to a contractor of the Agency having need for the information in order to perform a contract. Recipients of information shall be required to comply with the requirements of the Privacy Act of 1974, as amended, pursuant to 5 U.S.C. 552a(m).

5. A record related to an International Application filed under the Patent Cooperation Treaty in this system of records may be disclosed, as a routine use, to the International Bureau of the World Intellectual Property Organization, pursuant to the Patent Cooperation Treaty.

6. A record in this system of records may be disclosed, as a routine use, to another federal agency for purposes of National Security review (35 U.S.C. 181) and for review pursuant to the Atomic Energy Act (42 U.S.C. 218(c)).

7. A record from this system of records may be disclosed, as a routine use, to the Administrator, General Services, or his/her designee, during an inspection of records conducted by GSA as part of that agency's responsibility to recommend improvements in records management practices and programs, under authority of 44 U.S.C. 2904 and 2906. Such disclosure shall be made in accordance with the GSA regulations governing inspection of records for this purpose, and any other relevant (i.e., GSA or Commerce) directive. Such disclosure shall not be used to make determinations about individuals.

8. A record from this system of records may be disclosed, as a routine use, to the public after either publication of the application pursuant to 35 U.S.C. 122(b) or issuance of a patent pursuant to 35 U.S.C. 151. Further, a record may be disclosed, subject to the limitations of 37 CFR 1.14, as a routine use, to the public if the record was filed in an application which became abandoned or in which the proceedings were terminated and which application is referenced by either a published application, an application open to public inspections or an issued patent.

9. A record from this system of records may be disclosed, as a routine use, to a Federal, State, or local law enforcement agency, if the USPTO becomes aware of a violation or potential violation of law or regulation.

UNITED STATES PATENT AND TRADEMARK OFFICE

Commissioner for Patents
United States Patent and Trademark Office
P.O. Box 1450
Alexandria, VA 22313-1450
www.uspto.gov

In re Patent No. 5306372
Issue Date: April 26,1994
Application No. 07989759
Filed: December 14,1992
Attorney Docket No. 6483-001

:
:DECISION GRANTING PETITION
:UNDER 37 CFR 1.378(c)
:

This is a decision on the electronic petition, filed April 22,2008 ,under 37 CFR 1.378(c) to accept the unintentionally delayed payment of the 11.5 year maintenance fee for the above-identified patent.

The petition is GRANTED.

The maintenance fee is accepted, and the above-identified patent reinstated as of April 22,2008 . This decision also constitutes notice that the fee has been accepted. An electronic copy of the petition and this decision has been created as an entry in an Image File Wrapper. Nevertheless, petitioner should print and retain an independent copy

Telephone inquires related to this electronic decision should be directed to the Electronic Business Center at 1-866-217-9197.

Under the Paperwork Reduction Act of 1995, no persons are required to respond to a collection of information unless it displays valid OMB control number.

PETITION TO ACCEPT UNINTENTIONALLY DELAYED PAYMENT OF MAINTENANCE FEE IN AN EXPIRED PATENT (37 CFR 1.378(c))

Patent Number	Issue Date (YYYY-MM-DD)	Application Number	Filing Date (YYYY-MM-DD)	Docket Number (if applicable)
5,349,378	1994-09-20	07/993,393	1992-12-21	

CAUTION: Maintenance fee (and surcharge, if any) payment must correctly identify: (1) the patent number and (2) the application number of the actual U.S. application leading to issuance of that patent to ensure the fee(s) is/are associated with the correct patent. 37 CFR 1.366(c) and (d).

SMALL ENTITY
☒ Patentee claims, or has previously claimed, small entity status. See 37 CFR 1.27.

LOSS OF ENTITLEMENT TO SMALL ENTITY STATUS
☐ Patentee is no longer entitled to small entity status. See 37 CFR 1.27(g)

NOT Small Entity			Small Entity		
	Fee	Code		Fee	Code
○	3 ½ year	(1551)	○	3 ½ year	(2551)
○	7 ½ year	(1552)	○	7 ½ year	(2552)
○	11 ½ year	(1553)	◉	11 ½ year	(2553)

SURCHARGE
The surcharge required by 37 CFR 1.20(i)(2) (Fee Code 1558) must be paid as a condition of accepting unintentionally delayed payment of the maintenance fee.

MAINTENANCE FEE (37 CFR 1.20(e)-(g))
The appropriate maintenance fee must be submitted with this petition.

STATEMENT
THE UNDERSIGNED CERTIFIES THAT THE DELAY IN PAYMENT OF THE MAINTENANCE FEE TO THIS PATENT WAS UNINTENTIONAL

PETITIONER(S) REQUEST THAT THE DELAYED PAYMENT OF THE MAINTENANCE FEE BE ACCEPTED AND THE PATENT REINSTATED

THIS PORTION MUST BE COMPLETED BY THE SIGNATORY OR SIGNATORIES

37 CFR 1.378(d) states: "Any petition under this section must be signed by an attorney or agent registered to practice before the Patent and Trademark Office, or by the patentee, the assignee, or other party in interest."

I certify, in accordance with 37 CFR 1.4(d)(4) that I am

◉ An attorney or agent registered to practice before the Patent and Trademark Office

○ A sole patentee

○ A joint patentee; I certify that I am authorized to sign this submission on behalf of all the other patentees.

○ A joint patentee; all of whom are signing this e-petition

○ The assignee of record of the entire interest

Patent Practitioner			
A signature of the applicant or representative is required in accordance with 37 CFR 1.33 and 10.18. Please see 37 CFR 1.4(d) for the form of the signature			
Signature	/Abraham P. Ronai/	Date (YYYY-MM-DD)	2008-01-17
Name	Abraham P. Ronai	Registration Number	41275

This collection of information is required by 37 CFR 1.378(c). The information is required to obtain or retain a benefit by the public which is to file (and by the USPTO to process) an application. Confidentiality is governed by 35 U.S.C. 122 and 37 CFR 1.11 and 1.14. This collection is estimated to take 1 hour to complete, including gathering, preparing, and submitting the completed application form to the USPTO. Time will vary depending upon the individual case. Any comments on the amount of time you require to complete this form and/ or suggestions for reducing this burden, should be sent to the Chief Information Officer, U.S. Patent and Trademark Office, U.S. Department of Commerce, P.O. Box 1450, Alexandria, VA 22313-1450. DO NOT SEND FEES OR COMPLETED FORMS TO THIS ADDRESS. **This form can only be used when in conjunction with EFS-Web. If this form is mailed to the USPTO, it may cause delays in reinstating the patent.**

Privacy Act Statement

The Privacy Act of 1974 (P.L. 93-579) requires that you be given certain information in connection with your submission of the attached form related to a patent application or patent. Accordingly, pursuant to the requirements of the Act, please be advised that: (1) the general authority for the collection of this information is 35 U.S.C. 2(b)(2); (2) furnishing of the information solicited is voluntary; and (3) the principal purpose for which the information is used by the U.S. Patent and Trademark Office is to process and/or examine your submission related to a patent application or patent. If you do not furnish the requested information, the U.S. Patent and Trademark Office may not be able to process and/or examine your submission, which may result in termination of proceedings or abandonment of the application or expiration of the patent.

The information provided by you in this form will be subject to the following routine uses:

1. The information on this form will be treated confidentially to the extent allowed under the Freedom of Information Act (5 U.S.C. 552) and the Privacy Act (5 U.S.C. 552a). Records from this system of records may be disclosed to the Department of Justice to determine whether the Freedom of Information Act requires disclosure of these record s.

2. A record from this system of records may be disclosed, as a routine use, in the course of presenting evidence to a court, magistrate, or administrative tribunal, including disclosures to opposing counsel in the course of settlement negotiations.

3. A record in this system of records may be disclosed, as a routine use, to a Member of Congress submitting a request involving an individual, to whom the record pertains, when the individual has requested assistance from the Member with respect to the subject matter of the record.

4. A record in this system of records may be disclosed, as a routine use, to a contractor of the Agency having need for the information in order to perform a contract. Recipients of information shall be required to comply with the requirements of the Privacy Act of 1974, as amended, pursuant to 5 U.S.C. 552a(m).

5. A record related to an International Application filed under the Patent Cooperation Treaty in this system of records may be disclosed, as a routine use, to the International Bureau of the World Intellectual Property Organization, pursuant to the Patent Cooperation Treaty.

6. A record in this system of records may be disclosed, as a routine use, to another federal agency for purposes of National Security review (35 U.S.C. 181) and for review pursuant to the Atomic Energy Act (42 U.S.C. 218(c)).

7. A record from this system of records may be disclosed, as a routine use, to the Administrator, General Services, or his/her designee, during an inspection of records conducted by GSA as part of that agency's responsibility to recommend improvements in records management practices and programs, under authority of 44 U.S.C. 2904 and 2906. Such disclosure shall be made in accordance with the GSA regulations governing inspection of records for this purpose, and any other relevant (i.e., GSA or Commerce) directive. Such disclosure shall not be used to make determinations about individuals.

8. A record from this system of records may be disclosed, as a routine use, to the public after either publication of the application pursuant to 35 U.S.C. 122(b) or issuance of a patent pursuant to 35 U.S.C. 151. Further, a record may be disclosed, subject to the limitations of 37 CFR 1.14, as a routine use, to the public if the record was filed in an application which became abandoned or in which the proceedings were terminated and which application is referenced by either a published application, an application open to public inspections or an issued patent.

9. A record from this system of records may be disclosed, as a routine use, to a Federal, State, or local law enforcement agency, if the USPTO becomes aware of a violation or potential violation of law or regulation.

UNITED STATES PATENT AND TRADEMARK OFFICE

Commissioner for Patents
United States Patent and Trademark Office
P.O. Box 1450
Alexandria, VA 22313-1450
www.uspto.gov

In re Patent No. 5349378
Issue Date: September 20,1994
Application No. 07993393
Filed: December 21,1992
Attorney Docket No.

:

:DECISION GRANTING PETITION
:UNDER 37 CFR 1.378(c)

:

This is a decision on the electronic petition, filed January 17,2008 ,under 37 CFR 1.378(c) to accept the unintentionally delayed payment of the 11.5 year maintenance fee for the above-identified patent.

The petition is GRANTED.

The maintenance fee is accepted, and the above-identified patent reinstated as of January 17,2008 . This decision also constitutes notice that the fee has been accepted. An electronic copy of the petition and this decision has been created as an entry in an Image File Wrapper. Nevertheless, petitioner should print and retain an independent copy

Telephone inquires related to this electronic decision should be directed to the Electronic Business Center at 1-866-217-9197.

UNITED STATES PATENT AND TRADEMARK OFFICE

COMMISSIONER FOR PATENTS
UNITED STATES PATENT AND TRADEMARK OFFICE
P.O. BOX 1450
ALEXANDRIA, VA 22313-1450
www.uspto.gov

Paper No. 17

OLE K NILSSEN
200 N . HARRISON STREET
SUITE 103
ALGONQUIN, IL 60102

COPY MAILED

FEB 10 2006

OFFICE OF PETITIONS

In re Patent No. 5,510,680	:	
Issue Date: April 23, 1996	:	
Application No. 07/993,628	:	NOTICE
Filed: December 21, 1992	:	
Patentee: Ole K. Nilssen	:	

This is a notice regarding your request for acceptance of a fee deficiency submission under 37 CFR 1.28. On September 1, 1998, the Court of Appeals for the Federal Circuit held that 37 CFR 1.28(c) is the sole provision governing the time for correction of the erroneous payment of the issue fee as a small entity. **See DH Technology v. Synergystex International, Inc. 154 F.3d 1333, 47 USPQ2d 1865 (Fed. Cir. Sept. 1, 1998).**

The Office no longer investigates or rejects original or reissue applications under 37 CFR 1.56. **1098 Off. Gaz. Pat. Office 502 (January 3, 1989)**. Therefore, nothing in this Notice is intended to imply that an investigation was done.

Your fee deficiency submission under 37 CFR 1.28 is hereby **ACCEPTED**.

Inquiries related to this communication should be directed to the Office of Petitions Staff at (571) 272-3201.

This file is being returned to the Files Repository.

Sherry D. Brinkley
Petitions Examiner
Office of Petitions
Office of the Deputy Commissioner
for Patent Examination Policy

UNITED STATES PATENT AND TRADEMARK OFFICE

COMMISSIONER FOR PATENTS
UNITED STATES PATENT AND TRADEMARK OFFICE
P.O. BOX 1450
ALEXANDRIA, VA 22313-1450
www.uspto.gov

FITZPATRICK CELLA HARPER & SCINTO
30 ROCKEFELLER PLAZA
NEW YORK NY 10112

COPY MAILED

JUN 21 2007

OFFICE OF PETITIONS

In re Application of :
Takahashi, et al. :
Application No. 07/994,923 : DECISION ON PETITION
Filed: December 22, 1992 :
Docket No.: 35.C8906 :

This is a decision on the petition under 37 CFR 1.181, filed June 5, 2007, to withdraw the holding of abandonment.

The petition is **GRANTED**.

The application was held abandoned January 21, 2007 for failure to timely submit a properly reply to the Office communication mailed October 20, 2006. The Office communication set a three month shortened statutory period of time for reply. Notice of Abandonment was mailed May 25, 2007.

Petitioners assert non-receipt of the Office communication.

In the absence of any irregularity in the mailing of the Office communication, there is a strong presumption that the Office communication was properly mailed to practitioner at the address of record. This presumption may be overcome by a showing that the Office communication was not in fact received. The showing required to establish non-receipt of an Office communication must include a statement from the practitioner stating that the Office communication was not received by the practitioner and attesting to the fact that a search of the file jacket and docket records indicates that the Office communication was not received. A copy of the docket record where the non-received Office communication would have been entered had it been received and docketed must be attached to and referenced in practitioner's statement. *See*, MPEP 711.03(c). The showing outlined above may not be sufficient if there are circumstances that point to a conclusion that the Office communication may have been lost after receipt rather than a conclusion that the Office communication was lost in the mail.

The arguments and supporting documentation presented have been carefully considered. Moreover, petitioners have included a copy of a docket report covering the time period that a response would

have been due had it been received. In view thereof, the evidence presented support the conclusion that the non-final Office dated October 20, 2006 was not received.

In view thereof the Notice of Abandonment is hereby **VACATED** and the holding of abandonment is **WITHDRAWN**.

The application file is being forwarded to Technology Center 2100 for re-mailing of the non-final Office action. The time period for reply will be set in the re-mailed Office action.

Telephone inquiries concerning this matter may be directed to the undersigned at 571-272-3205.

Alesia M. Brown
Petitions Attorney
Office of Petitions

UNITED STATES PATENT AND TRADEMARK OFFICE

Commissioner for Patents
United States Patent and Trademark Office
P.O. Box 1450
Alexandria, VA 22313-1450
www.uspto.gov

Paper No. 29

OLE K. NILSSEN
200 N HARRISON STREET
SUITE 103
ALGONQUIN IL 60102

COPY MAILED

MAR 0 2 2006

OFFICE OF PETITIONS

In re Patent No. 5,489,823	:	
Issued: February 6, 1996	:	
Application No. 07/997,138	:	ON PETITION
Filed: December 22, 1992	:	
Title: ELECTRONIC BALLAST FOR GAS DISCHARGE LAMP	:	

This is a notice regarding your request for acceptance of a fee deficiency submission under 37 CFR 1.28. On September 1, 1998, the Court of Appeals for the Federal Circuit held that 37 CFR 1.28(c) is the sole provision governing the time for correction of the erroneous payment of the issue fee as a small entity. **See DH Technology v. Synergystex International, Inc. 154 F.3d 1333, 47 USPQ2d 1865 (Fed. Cir. Sept. 1, 1998).**

The Office no longer investigates or rejects original or reissue applications under 37 CFR 1.56. **1098 Off. Gaz. Pat. Office 502 (January 3, 1989)**. Therefore, nothing in this Notice is intended to imply that an investigation was done.

Your fee deficiency submission under 37 CFR 1.28 is hereby **ACCEPTED**.

Inquiries related to this communication should be directed to the undersigned at (571) 272-3282.

This file is being forwarded to the Files Repository.

Liana Chase
Petitions Examiner
Office of Petitions

Approved for use through 04/30/2009. OMB 0651-0016
U.S. Patent and Trademark Office: U.S. DEPARTMENT OF COMMERCE
Under the Paperwork Reduction Act of 1995, no persons are required to respond to a collection of information unless it displays valid OMB control number.

PETITION TO ACCEPT UNINTENTIONALLY DELAYED PAYMENT OF MAINTENANCE FEE IN AN EXPIRED PATENT (37 CFR 1.378(c))

Patent Number	Issue Date (YYYY-MM-DD)	Application Number	Filing Date (YYYY-MM-DD)	Docket Number (if applicable)
5,442,457	1995-08-15	08/002,607	1993-01-11	

CAUTION: Maintenance fee (and surcharge, if any) payment must correctly identify: (1) the patent number and (2) the application number of the actual U.S. application leading to issuance of that patent to ensure the fee(s) is/are associated with the correct patent. 37 CFR 1.366(c) and (d).

SMALL ENTITY
☒ Patentee claims, or has previously claimed, small entity status. See 37 CFR 1.27.

LOSS OF ENTITLEMENT TO SMALL ENTITY STATUS
☐ Patentee is no longer entitled to small entity status. See 37 CFR 1.27(g)

NOT Small Entity			Small Entity		
	Fee	Code		Fee	Code
○	3 ½ year	(1551)	○	3 ½ year	(2551)
○	7 ½ year	(1552)	○	7 ½ year	(2552)
○	11 ½ year	(1553)	◉	11 ½ year	(2553)

SURCHARGE
The surcharge required by 37 CFR 1.20(i)(2) (Fee Code 1558) must be paid as a condition of accepting unintentionally delayed payment of the maintenance fee.

MAINTENANCE FEE (37 CFR 1.20(e)-(g))
The appropriate maintenance fee must be submitted with this petition.

STATEMENT
THE UNDERSIGNED CERTIFIES THAT THE DELAY IN PAYMENT OF THE MAINTENANCE FEE TO THIS PATENT WAS UNINTENTIONAL

PETITIONER(S) REQUEST THAT THE DELAYED PAYMENT OF THE MAINTENANCE FEE BE ACCEPTED AND THE PATENT REINSTATED

THIS PORTION MUST BE COMPLETED BY THE SIGNATORY OR SIGNATORIES

37 CFR 1.378(d) states: "Any petition under this section must be signed by an attorney or agent registered to practice before the Patent and Trademark Office, or by the patentee, the assignee, or other party in interest."

I certify, in accordance with 37 CFR 1.4(d)(4) that I am

◉ An attorney or agent registered to practice before the Patent and Trademark Office

○ A sole patentee

○ A joint patentee; I certify that I am authorized to sign this submission on behalf of all the other patentees.

○ A joint patentee; all of whom are signing this e-petition

○ The assignee of record of the entire interest

Patent Practitioner			
A signature of the applicant or representative is required in accordance with 37 CFR 1.33 and 10.18. Please see 37 CFR 1.4(d) for the form of the signature			
Signature	/mark brown/	Date (YYYY-MM-DD)	2008-03-07
Name	Mark Brown	Registration Number	30361

This collection of information is required by 37 CFR 1.378(c). The information is required to obtain or retain a benefit by the public which is to file (and by the USPTO to process) an application. Confidentiality is governed by 35 U.S.C. 122 and 37 CFR 1.11 and 1.14. This collection is estimated to take 1 hour to complete, including gathering, preparing, and submitting the completed application form to the USPTO. Time will vary depending upon the individual case. Any comments on the amount of time you require to complete this form and/ or suggestions for reducing this burden, should be sent to the Chief Information Officer, U.S. Patent and Trademark Office, U.S. Department of Commerce, P.O. Box 1450, Alexandria, VA 22313-1450. DO NOT SEND FEES OR COMPLETED FORMS TO THIS ADDRESS. **This form can only be used when in conjunction with EFS-Web. If this form is mailed to the USPTO, it may cause delays in reinstating the patent.**

Privacy Act Statement

The Privacy Act of 1974 (P.L. 93-579) requires that you be given certain information in connection with your submission of the attached form related to a patent application or patent. Accordingly, pursuant to the requirements of the Act, please be advised that: (1) the general authority for the collection of this information is 35 U.S.C. 2(b)(2); (2) furnishing of the information solicited is voluntary; and (3) the principal purpose for which the information is used by the U.S. Patent and Trademark Office is to process and/or examine your submission related to a patent application or patent. If you do not furnish the requested information, the U.S. Patent and Trademark Office may not be able to process and/or examine your submission, which may result in termination of proceedings or abandonment of the application or expiration of the patent.

The information provided by you in this form will be subject to the following routine uses:

1. The information on this form will be treated confidentially to the extent allowed under the Freedom of Information Act (5 U.S.C. 552) and the Privacy Act (5 U.S.C. 552a). Records from this system of records may be disclosed to the Department of Justice to determine whether the Freedom of Information Act requires disclosure of these record s.

2. A record from this system of records may be disclosed, as a routine use, in the course of presenting evidence to a court, magistrate, or administrative tribunal, including disclosures to opposing counsel in the course of settlement negotiations.

3. A record in this system of records may be disclosed, as a routine use, to a Member of Congress submitting a request involving an individual, to whom the record pertains, when the individual has requested assistance from the Member with respect to the subject matter of the record.

4. A record in this system of records may be disclosed, as a routine use, to a contractor of the Agency having need for the information in order to perform a contract. Recipients of information shall be required to comply with the requirements of the Privacy Act of 1974, as amended, pursuant to 5 U.S.C. 552a(m).

5. A record related to an International Application filed under the Patent Cooperation Treaty in this system of records may be disclosed, as a routine use, to the International Bureau of the World Intellectual Property Organization, pursuant to the Patent Cooperation Treaty.

6. A record in this system of records may be disclosed, as a routine use, to another federal agency for purposes of National Security review (35 U.S.C. 181) and for review pursuant to the Atomic Energy Act (42 U.S.C. 218(c)).

7. A record from this system of records may be disclosed, as a routine use, to the Administrator, General Services, or his/her designee, during an inspection of records conducted by GSA as part of that agency's responsibility to recommend improvements in records management practices and programs, under authority of 44 U.S.C. 2904 and 2906. Such disclosure shall be made in accordance with the GSA regulations governing inspection of records for this purpose, and any other relevant (i.e., GSA or Commerce) directive. Such disclosure shall not be used to make determinations about individuals.

8. A record from this system of records may be disclosed, as a routine use, to the public after either publication of the application pursuant to 35 U.S.C. 122(b) or issuance of a patent pursuant to 35 U.S.C. 151. Further, a record may be disclosed, subject to the limitations of 37 CFR 1.14, as a routine use, to the public if the record was filed in an application which became abandoned or in which the proceedings were terminated and which application is referenced by either a published application, an application open to public inspections or an issued patent.

9. A record from this system of records may be disclosed, as a routine use, to a Federal, State, or local law enforcement agency, if the USPTO becomes aware of a violation or potential violation of law or regulation.

UNITED STATES PATENT AND TRADEMARK OFFICE

Commissioner for Patents
United States Patent and Trademark Office
P.O. Box 1450
Alexandria, VA 22313-1450
www.uspto.gov

In re Patent No. 5442457
Issue Date: August 15,1995
Application No. 08002607
Filed: January 11,1993
Attorney Docket No. B0735-900300

:
:DECISION GRANTING PETITION
:UNDER 37 CFR 1.378(c)
:

This is a decision on the electronic petition, filed March 7,2008 ,under 37 CFR 1.378(c) to accept the unintentionally delayed payment of the 11.5 year maintenance fee for the above-identified patent.

The petition is GRANTED.

The maintenance fee is accepted, and the above-identified patent reinstated as of March 7,2008 . This decision also constitutes notice that the fee has been accepted. An electronic copy of the petition and this decision has been created as an entry in an Image File Wrapper. Nevertheless, petitioner should print and retain an independent copy

Telephone inquires related to this electronic decision should be directed to the Electronic Business Center at 1-866-217-9197.

NOTICE RE: CERTIFICATES OF CORRECTION

DATE : _____ Paper No.: ___

TO : Supervisor, Art Unit _____

SUBJECT : Certificate of Correction Request in Patent No.: 5654301

A response to the following question(s) is requested with respect to the accompanying request for a certificate of correction.

☐ 1. Would the change(s) requested, under 37 C.F.R. 1.323, correcting Applicant/Attorney's (A or Atty.) errors, constitut new matter or require reexamination of the application?

☐ 2. Would the change(s) requested, under 37 C.F.R. 1.323, correcting Applicant/Attorney's (A or Atty.) errors, materially affect the scope or meaning of the claims allowed by the examiner in the patent?

☐ 3. Applicant disagrees with change(s) initialed and dated by Examiner in lieu of an Examiner's Amendment. Should the change request be granted?

☒ 4. With respect to the change(s) requested, correcting Office and/or printing (O, Off, C, and/or P) errors, should the patent read as shown in the certificate of correction?

☐ 5. If the amendment filed _____ had been considered by the Examiner, would the amendment have been entered?

PLEASE RESPOND WITHIN 7 DAYS AND RETURN THE FILE TO

PALM LOCATION. 7580,
CERTIFICATES OF CORRECTION BR, PARK 3 -922,
Thank you

Supervisory Legal Instrument Examiner
Tel. No. 305-8228

PLEASE CHECK THE BOX(ES) BELOW CORRESPONDING TO THE BOXES CHECKED FOR QUESTION(S) ABOVE AND RETURN FILE TO: PALM LOCATION 7580, CERT. OF CORREC. BR. , PK 3 - 922

DATE:

The decision regarding the change(s) requested in the certificate of correction is shown below.

☐ 1.YES	☐ NO	☐ Comments below
☐ 2.YES	☐ NO	☐ Comments below
☐ 3.YES	☐ NO	☐ Comments below
☒ 4.YES	☐ NO	☐ Comments below
☐ 5.YES	☐ NO	☐ Comments below

~~REVIEW~~

PUBLISH

☐ Comments _____

Approved

O. Chaudhuri

Supervisor

Art Unit

PTOL-306 (REV. 10/87)

U.S. DEPARTMENT OF COMMERCE Patent and Trademark Office

UNITED STATES PATENT AND TRADEMARK OFFICE

CERTIFICATE OF CORRECTION

PATENT NO. : 5,654,301
DATED : August 5, 1997
INVENTOR(S) : Harold Kohn, et al.

It is certified that error appears in the above-identified patent and that said Letters Patent is hereby corrected as shown below:

Column 34,
Line 59: "Ch $_3$ H)" should read -- C_3 H) --
Line 59: "8.62 Hz" should read -- 8.62 (d,J=7.7 --
Line 60: "H," should read -- Hz, --

Column 35,
Line 15: "form" should read -- formed --
Line 35: "8.89" should read -- 8.99 --

Column 37,
Line 53: "α" should read -- 2 --
Line 60: "or" should read -- of --

Column 38,
Line 65: "13_c" should read -- 13 $_C$ --

Column 40,
Line 25: "2.33" should read -- 2.23 --
Line 25: "425" should read -- 4.25 --
Line 67: "(M^{30}=1)" should read -- (M^+= 1) --

Column 41,
Line 25: "2-hydroxyamino" should read -- 2-(N-hydroxyamino) --

Column 42,
Line 55: "(M^+ + 100)" should read -- (M^+ + 1,100) --

Column 19,
Line 30: "intraperitoncally" should read -- intraperitoneally --

Column 27,
Line 45: "16 ° " should read -- 169 ° --

Column 28,
Line 56: "7.1.7" should read -- 7.17 --

Column 30,
Line 37: "63" should read -- 6.3 --
Line 64: "785" should read -- 735 --

UNITED STATES PATENT AND TRADEMARK OFFICE

CERTIFICATE OF CORRECTION

PATENT NO. : 5,654.301
DATED : August 5, 1997
INVENTOR(S) : Harold Kohn, et al.

It is certified that error appears in the above-identified patent and that said Letters Patent is hereby corrected as shown below:

Column 31,
Line 21: "cbloroform" should read -- chloroform --
Line 49: "2.78" should read -- 2.75 --

Column 33,
Line 16: "(D,L" should read -- (D,L) --
Line 38: "94:4" should read -- 96:4 --
Lines 41 & 42: "80" should read -- 8.0 --
Line 48: "C_3' "should read -- C_6' --

Column 34,
Line 15: "130" should read --139 --
Line 41: "M + 1" should read -- $M^+ + 1$ --

Column 43,
Lines 21 & 49: "acetamido" should read -- acetamide --
Line 59: "1.84"" should read -- 1.84 --

Column 44,
Line 46, "n" should read -- a --
Line 46: "ethoxyacetamido" should read -- ethoxyacetamide --
Line 65: "acetamido" should read -- acetamide --

Column 45,
Line 18: after "spectrum" insert -- (FD) --
Line 39: "7.5" should read -- 7.52 --
Line 56: "73.3" should read -- 7.33 --

Column 46,
Line 25: "CH_3Cl_2," should read -- CH_2Cl_2, --

Column 49,
Lines 57-58: "O-methylhydroxyamino" should read -- O-dimethylhydroxyamino --

Column 50,
Line 40: "149" should read -- 14.9 --

UNITED STATES PATENT AND TRADEMARK OFFICE

CERTIFICATE OF CORRECTION

PATENT NO. : 5,654.301
DATED : August 5, 1997
INVENTOR(S) : Harold Kohn, et al.

It is certified that error appears in the above-identified patent and that said Letters Patent is hereby corrected as shown below:

Column 51,
Line 24: "accetamido" should read -- acetamide --
Line 38: "Dicacetamido" should read -- Diacetamide --
Line 46: "and-was" should read -- and was --

Column 52,
Line 16: "166.3.9" should read -- 166.39 --

Column 54,
Line 16: "Time" should read -- The --

Column 55,
Line 7: "H" should read -- It --

Column 56,
Line 55: "C_1 " should read -- C_{12} --
Line 66: "while" should read -- white --
Line 66: "alter" should read -- after --

Column 58,
Line 30: "dr" should read -- dt --

Column 59,
Line 62: after "1.89" insert -- (s, --
Line 63: Delete -- (s, --

Column 60,
Line 4: "1" should read -- 91 --

Column 61,
Line 30: "(C_2), H" should read -- CH_2), --

Column 63,
Line 38: "add" should read -- acid --

Column 65,
Line 10: "8.62" should read -- 8.61 --
Line 21: "arthydride" should read -- anhydride --

UNITED STATES PATENT AND TRADEMARK OFFICE

CERTIFICATE OF CORRECTION

PATENT NO. : 5,654.301
DATED : August 5, 1997
INVENTOR(S) : Harold Kohn, et al.

It is certified that error appears in the above-identified patent and that said Letters Patent is hereby corrected as shown below:

Column 66,
Line 34: "600" should read -- 670 --

Column 67,
Line 22: "63.72" should read -- 63.22 --
Line 63: "170.30" should read -- 170.03 --
Line 66: "N_{402}" should read -- N_4 O_2 S --

Column 68,
Line 9: "while" should read -- white --
Line 67, "1.80" should read -- 181 --

Column 69,
Line 8: "176.5" should read -- 176.33 --
Lines 45-46: "Found: C,60.90: C, 61.16; H, 587; N, 1358.H, 5.77; N, 13.35." should read -- C, 61.16;H, 5.87; N, 13.58. Found: C, 60.90; H,5.77;N, 13.35. --
Line 57: "29o" should read -- 2o --

Column 70,
Line 41: "2g" should read 2q --

Column 76,
Line 3: "BF3" should read -- BF_3 --
Line 37, "NHH" should read -- NHH' --

Column 81,
Line 47: "imidazo" should read -- imidazoyl --

Column 82,
Line 6: "38.0 . 56.0" should read -- 38.0-56.0 --

Column 83,
Line 15: "CH_2 CH_6 H_5" should read -- CH_2C_6 H_5 --

Column 84,
Line 63: "206" should read -- 205 --

Column 86,
Line 47: "95" should read -- 9.5 --

UNITED STATES PATENT AND TRADEMARK OFFICE

CERTIFICATE OF CORRECTION

PATENT NO. : 5,654.301
DATED : August 5, 1997
INVENTOR(S) : Harold Kohn, et al.

It is certified that error appears in the above-identified patent and that said Letters Patent is hereby corrected as shown below:

Column 88, claim 1:
Line 24, "SO_3^{31}" should read -- SO_3 --

Column 89, claim 10:
Line 26, "O" should read -- A and Q --

Column 90, claim 14:
Line 28, "R_1" should read -- R_2 --

Column 90, claim 17:
Line 46, "1-15wherein" should read -- 1-16 wherein --

Column 90, claim 20:
Line 60, "1-15" should read -- 1-19 --

Signed and Sealed this

Twenty-seventh Day of November, 2001

Attest:

Nicholas P. Godici

Attesting Officer

NICHOLAS P. GODICI
Acting Director of the United States Patent and Trademark Office

UNITED STATES PATENT AND TRADEMARK OFFICE

COMMISSIONER FOR PATENTS
UNITED STATES PATENT AND TRADEMARK OFFICE
P.O. BOX 1450
ALEXANDRIA, VA 22313-1450
www.uspto.gov

Paper No. 20

ALLEN M. KRASS
GIFFORD KRASS GROH SPRINKLE
ANDERSON & CITKOWSKI, P.C.
280 N. OLD WOODWARD AVENUE, SUITE 400
BIRMINGHAM, MI 48009

COPY MAILED

NOV 1 8 2003

OFFICE OF PETITIONS

In re Application of :
Michael R. Levine :
Application No. 08/005,727 :
Filed: January 19, 1993 :
Attorney Docket No. LVN-023

NOTICE

This is a notice regarding your request for acceptance of a fee deficiency submission under 37 CFR 1.28. On September 1, 1998, the Court of Appeals for the Federal Circuit held that 37 CFR 1.28(c) is the sole provision governing the time for correction of the erroneous payment of the issue fee as a small entity. **See DH Technology v. Synergystex International, Inc. 154 F.3d 1333, 47 USPQ2d 1865 (Fed. Cir. Sept. 1, 1998).**

The Office no longer investigates or rejects original or reissue applications under 37 CFR 1.56. **1098 Off. Gaz. Pat. Office 502 (January 3, 1989)**. Therefore, nothing in this Notice is intended to imply that an investigation was done.

Your fee deficiency submission under 37 CFR 1.28 is hereby **ACCEPTED**.

Inquiries related to this communication should be directed to the Office of Petitions Staff at (703) 305-9285.

This file is being forwarded to Files Repository.

Irvin Dingle
Petitions Examiner
Office of Petitions
Office of the Deputy Commissioner
for Patent Examination Policy

UNITED STATES PATENT AND TRADEMARK OFFICE

COMMISSIONER FOR PATENTS
UNITED STATES PATENT AND TRADEMARK OFFICE
P.O. BOX 1450
ALEXANDRIA, VA 22313-1450
www.uspto.gov

NOV 19 2003

#44

FISH & RICHARDSON PC
225 FRANKLIN ST
BOSTON MA 02110

In re Application of
James S. Huston et al
Serial No.: 08/014,096
Filed: February 4, 1993
Attorney Docket No. : 03235-004002

WITHDRAWAL OF ABANDONMENT

This is in response to the petition under 37 CFR 1.181, filed September 10, 2003, requesting withdrawal of abandonment of the above-identified application based on non-receipt of an Office action.

A review of the file history of the application shows that the examiner mailed a non-Final Office action to applicants, on November 25, 2002, at the original correspondence address: MINTZ, LEVIN, COHN, FERRIS, GLOVSKY & POPEO, ONE FINANCIAL CENTER, Boston, MA 02111. A review of the PALM data base for the application confirms that the current correspondence address is: FISH & RICHARDSON PC, 225 FRANKLIN ST, BOSTON MA 02110. On July 8, 2003 the examiner mailed a Notice of Abandonment to applicants at the current address for failure to reply to the Office action. Applicants state that the Office action was never received and provide statements and docket record evidence of non-receipt in support thereof. Located in the Office file is a Change of Correspondence Address dated as accepted and entered on November 29, 2002, four days subsequent to the mailing of the Office action. This It is noted, however, that as early as March 15, 2002, applicants were using the new correspondence address above as their return mailing address on correspondence mailed to the Office (see Notice of Appeal mailed 3/07/02), but delayed more than six months before submitting it to the Office as the correspondence address for the above identified and hundreds of other applications. A review of the Petition under 37 CFR 1.129(a) filed September 16, 2002, does not include a change of correspondence address. Applicants are required to keep the Office informed of their current correspondence address and to promptly inform the Office of any change of correspondence address. Applicants' delay in submitting the change of correspondence address caused the Office action to be mailed to an incorrect address. In view thereof, the Notice of Abandonment is not withdrawn and the application is not restored to a pending status.

Applicants' petition is **DENIED** for the reasons set forth above. Should there be any other facts not evident in applicants' submitted petition, they should be submitted in a renewed petition for

reconsideration. Applicants may also submit a petition under 37 CFR 1.137(b) requesting revival of the above identified application. Any new or renewed petition must be submitted within TWO MONTHS of the mailing date of this decision in order to be considered timely.

Should there be any questions regarding this decision, please contact William R. Dixon, Jr., by mail addressed to Director, Technology Center 1600, P.O. Box 1450, Alexandria, VA 22313-1450, or by telephone at (703) 308-3824 or by facsimile transmission at (703) 305-7230.

Jasemine C. Chambers
Director, Technology Center 1600

UNITED STATES PATENT AND TRADEMARK OFFICE

Commissioner for Patents
United States Patent and Trademark Office
P.O. Box 1450
Alexandria, VA 22313-1450
www.uspto.gov

Paper No. 46

Fish & Richardson
225 Franklin Street
Boston, MA 02110

COPY MAILED

FEB 1 0 2004

OFFICE OF PETITIONS

In re Application of	:	
Huston et al.	:	
Application No. 08/014,096	:	ON PETITION
Filed: February 4, 1993	:	
Attorney Docket No. 13235-004002/00960-562DIVFWC	:	

This is a decision on the petition under 37 CFR 1.137(b), filed January 20, 2004, to revive the above-identified application.

The petition is granted.

The above-identified application became abandoned for failure to reply in a timely manner in reply to the non-final Office action mailed November 25, 2002, which set a shortened statutory period for reply of three months. No extensions of time under the provisions of 37 CFR 1.136 have been obtained. Accordingly, the application became abandoned on February 26, 2003.

The application file is being forwarded to Technology Center AU 1646 for further processing.

Telephone inquiries concerning this decision may be directed to Latrice Bond at (703) 308-6911.

Latrice Bond

Latrice Bond
Paralegal Specialist
Office of Petitions
Office of the Deputy Commissioner
For Patent Examination Policy

Raytheon

Raytheon Company
Office of the General Counsel
Intellectual Property & Licensing Dept.

13510 N. Central Expressway
M/S 200
Dallas, TX 75243-1108
P.O. Box 660246—M/S 200
Dallas, TX 75266
972.344.1201
972.344.1211/12 fax

Fax

Date	August 8, 2006	Message number	Pages (including cover) 9
To	Examiner Brad Harris	From	Theresa Van Zandt
Organization	US Patent & Trademark Office	Organization	
Fax	**571-270-9838**	Fax	972-344-1211
Telephone	703-308-9250x141	Telephone	972-344-1201
Location / mail stop			

Message / Instructions

Attached please find the decision we received from the USPTO on 11/18/02 (date mailed 11/02/02).

If you need anything further, please let us know.

Notes:
1. *No classified information shall be sent via facsimile.*
2. *No "Company Private" material shall be sent to an unattended machine and transmission to an attended machine requires telephone confirmation from intended recipient upon receipt.*
3. *No technical data related to defense articles or services shall be transmitted out of the United States.*
4. *If message is not received completely or not received by intended party, please contact sender.*

10-3540PC (6/98)
Ref: General Policies and Procedures
No. 39-5005-110

UNITED STATES PATENT AND TRADEMARK OFFICE

COMMISSIONER FOR PATENTS
UNITED STATES PATENT AND TRADEMARK OFFICE
WASHINGTON, D.C. 20231
www.uspto.gov

DGF:11-02

Paper 16

RAYTHEON
PATENTS & LICENSING
RECEIVED

NOV 18 2002

PATENT DOCKET ADMINISTRATION
RAYTHEON COMPANY
BLDG. RE/R11/M365
P.O. BOX 902
EL SEGUNDO CA 90245-0902

COPY MAILED

NOV 12 2002

OFFICE OF PETITIONS

In re Application of
Bates, et al.
Application No. 008/015,665
Filed: 9 February, 1993
Attorney Docket No.: PD-90138A

ON PETITION

This is a decision on the petition filed on 20 July, 2001 (and supplemented via FAX on 8 and 11 November, 2002), to revive under 37 C.F.R. §1.137(b),[1] and considered in light of the allegations as a petition to withdraw the holding of abandonment under 37 C.F.R. §1.181.[2]

The Office regrets the delay in addressing this matter.

---

[1] Effective December 1, 1997, the provisions of 37 C.F.R. §1.137(b) now provide that where the delay in reply was unintentional, a petition may be filed to revive an abandoned application or a lapsed patent pursuant to 37 C.F.R. §1.137(b). a grantable petition filed under the provisions of 37 C.F.R. §1.137(b) must be accompanied by:
(1) the required reply, unless previously filed. In a nonprovisional application abandoned for failure to prosecute, the required reply may be met by the filing of a continuing application. In an application or patent, abandoned or lapsed for failure to pay the issue fee or any portion thereof, the required reply must be the payment of the issue fee or any outstanding balance thereof.
(2) the petition fee as set forth in 37 C.F.R. §1.17(m);
(3) a statement that the entire delay in filing the required reply from the due date for the reply until the filing of a grantable petition pursuant to 37 C.F.R. §1.137(b) was unintentional. The Commissioner may require additional information where there is a question whether the delay was unintentional; and
(4) any terminal disclaimer (and fee set forth in 37 C.F.R. §1.20(d)) required pursuant to 37 C.F.R. §1.137(c). (Emphasis supplied.)

[2] The regulations at 37 C.F.R. §1.181 provide, in pertinent part:
§1.181 Petition to the Commissioner.
(a) Petition may be taken to the Commissioner: (1) From any action or requirement of any examiner in the *ex parte* prosecution of an application which is not subject to appeal to the Board of Patent Appeals and Interferences or to the court; (2) In cases in which a statute or the rules specify that the matter is to be determined directly by or reviewed by the Commissioner; and (3) To invoke the supervisory authority of the Commissioner in appropriate circumstances. * * *
(b) Any such petition must contain a statement of the facts involved and the point or points to be reviewed and the action requested. Brief or memoranda, if any, in support thereof should accompany or be embodied in the petition; and where facts are to be proven, the proof in the form of affidavits or declaration (and exhibits, if any) must accompany the petition.
© When a petition is taken from an action or requirement of an examiner in the *ex parte* prosecution of an application, it may be required that there have been a proper request for reconsideration (§1.111) and a repeated action by the examiner. The examiner may be directed by the Commissioner to furnish a written statement, within a specified time, setting forth the reasons for his decision upon the matters averred in the petition, supplying a copy thereof to the petitioner.
(d) Where a fee is required for a petition to the Commissioner the appropriate section of this part will so indicate. If any required fee does not accompany the petition, the petition will be dismissed. * * *
(f) Except as otherwise provided in these rules, any such petition not filed within 2 months from the action complained of, may be dismissed as untimely. The mere filing of a petition will not stay the period for reply to an Examiner's action which may be running against an application, nor act as a stay of other proceedings. * * *

Application No. 008/015,665

NOTE: The address data submitted in 1999 has been made of record, however, it appears that there is a difference some of the data as compared to Petitioner's latest filing. While a courtesy copy of this decision will be mailed to Petitioner, all future correspondence will be directed to the address of record until such time as appropriate instructions are received to the contrary.

For the reasons set forth below:

- the petition considered under 37 C.F.R. §1.181 to withdraw the holding of abandonment is **GRANTED**; and
- the petition under 37 C.F.R. §1.137(b) is **DISMISSED as moot**.[3]

BACKGROUND

A review of the record reveals:

- it appeared that the Applicant/Petitioner (Petitioner) failed to respond timely to the Notice of Allowance and Issue Fee Due mailed on 30 November, 1993, with response (payment of the Issue Fee) due under a non-extendable deadline on or before 28 February, 1994;
- Notice of Abandonment was mailed on 15 April, 1994;
- Petitioner submits, *inter alia*:

  (a) what purports to be copies of: (1) the Formal Drawings Transmittal dated 10 January, 1994, and (2) Petitioner's receipt card for said Transmittal date stamped as received by the Office on 13 January, 1994;

  (b) what purports to be copies of: (1) the Issue Fee Transmittal dated 9 February, 1994 (authorizing payment of the Issue Fee by charge to Deposit Account 08-3250), and (2) Petitioner's receipt card for said Issue Fee Transmittal date stamped as received by the Office on 13 February, 1994;

  (c) (1) a declaration of Counsel that no Notice of Abandonment was received, and (2) what purports to be a copy of the docket details for the instant application evidencing no receipt of such Notice;

[3] Pursuant to Petitioner's authorization, the petitioner fee ($1,280.00) is credited to Deposit Account 50-0616. The Terminal Disclaimer and fee are waived sua sponte.

(d) what purports to be a copy of a Status Request dated 22 August, 1995 (and, notably, the file contains the document date stamped as received on 25 August, 1995);

(e) what purports to be copies of: (1) a Status Request dated 6 January, 1999, with a Name and Address Change (and supporting documents), and (b) Petitioner's receipt card for said Request and Name and Address Change stamped as received by the Office on 13 January, 1999;

(f) what purports to be copies of: (1) a Status Request dated 21 April, 2000, and (b) Petitioner's receipt card for said Request stamped as received by the Office on 24 April, 2000; and

(g) what purports to be a copy of a Petitioner's incoming mail log/docket sheet for the instant application;

(h) what purports to be a copy of a Status Request dated 28 June, 2001, after which Petitioner indicates first receipt via FAX of the 15 April, 1994, Notice of Abandonment.

Petitioner submitted with the petition authorization for all fees, including the Issue Fee (the required reply).

The courts have determined the construct for properly supporting a petition seeking withdrawal of a holding of abandonment.[4]

CONCLUSION

Therefore , the petition considered under 37 C.F.R. §1.181 to withdraw the holding of abandonment is **granted**.

Accordingly, the holding of Abandonment is withdrawn, the Notice of Abandonment of 15 April, 1994, was mailed in error and is vacated, and the petition fee is waived.[5]

Thus, the petition under 37 C.F.R. §1.137(b) is **dismissed as moot**.

---

[4] See: Delgar v. Schulver, 172 USPQ 513 (D.D.C. 1971).

[5] Pursuant to Petitioner's authorization, the petition fee ($1,280.00) is being refunded and the Issue Fee ($1,280.00) is being charged to Deposit Account 50-1616.

This application is being forwarded to Publications Branch to be processed into a patent.

Telephone inquiries regarding this decision may be directed to the undersigned at (703) 305-9199.

11-19-02
APPA
CWL

John J. Gillon, Jr.
Senior Attorney
Office of Petitions
Office of the Deputy Commissioner
for Patent Examination Policy

cc:
Colin Raufer
Raytheon Company
P.O. Box 902
Bldg. E01, M/S E150
20000 E. El Segundo Boulevard
El Segundo, CA 90245-0902

UNITED STATES PATENT AND TRADEMARK OFFICE

COMMISSIONER FOR PATENT
UNITED STATES PATENT AND TRADEMARK OFFICE
WASHINGTON, D.C. 20231
www.uspto.gov

Paper 26

RAYTHEON
PATENTS & LICENSING
RECEIVED

NOV 18 2002

PATENT DOCKET ADMINISTRATION
RAYTHEON COMPANY
BLDG. RE/R11/M365
P.O. BOX 902
EL SEGUNDO CA 90245-0902

COPY MAILED

NOV 12 2002

OFFICE OF PETITIONS

In re Application of
Bates, et al. :
Application No. 008/015,665 : ON PETITION
Filed: 9 February, 1993 :
Attorney Docket No.: PD-90138A :

This is a decision on the petition filed on 20 July, 2001 (and supplemented via FAX on 8 and 11 November, 2002), to revive under 37 C.F.R. §1.137(b),[1] and considered in light of the allegations as a petition to withdraw the holding of abandonment under 37 C.F.R. §1.181.[2]

The Office regrets the delay in addressing this matter.

---

[1] Effective December 1, 1997, the provisions of 37 C.F.R. §1.137(b) now provide that where the delay in reply was unintentional, a petition may be filed to revive an abandoned application or a lapsed patent pursuant to 37 C.F.R. §1.137(b). a grantable petition filed under the provisions of 37 C.F.R. §1.137(b) must be accompanied by:
(1) the required reply, unless previously filed. In a nonprovisional application abandoned for failure to prosecute, the required reply may be met by the filing of a continuing application. In an application or patent, abandoned or lapsed for failure to pay the issue fee or any portion thereof, the required reply must be the payment of the issue fee or any outstanding balance thereof.
(2) the petition fee as set forth in 37 C.F.R. §1.17(m);
(3) a statement that the entire delay in filing the required reply from the due date for the reply until the filing of a grantable petition pursuant to 37 C.F.R. §1.137(b) was unintentional. The Commissioner may require additional information where there is a question whether the delay was unintentional; and
(4) any terminal disclaimer (and fee set forth in 37 C.F.R. §1.20(d)) required pursuant to 37 C.F.R. §1.137(c). (Emphasis supplied.)

[2] The regulations at 37 C.F.R. §1.181 provide, in pertinent part:
§1.181 Petition to the Commissioner.
(a) Petition may be taken to the Commissioner: (1) From any action or requirement of any examiner in the *ex parte* prosecution of an application which is not subject to appeal to the Board of Patent Appeals and Interferences or to the court; (2) In cases in which a statute or the rules specify that the matter is to be determined directly by or reviewed by the Commissioner; and (3) To invoke the supervisory authority of the Commissioner in appropriate circumstances. * * *
(b) Any such petition must contain a statement of the facts involved and the point or points to be reviewed and the action requested. Brief or memoranda, if any, in support thereof should accompany or be embodied in the petition; and where facts are to be proven, the proof in the form of affidavits or declaration (and exhibits, if any) must accompany the petition.
© When a petition is taken from an action or requirement of an examiner in the *ex parte* prosecution of an application, it may be required that there have been a proper request for reconsideration (§1.111) and a repeated action by the examiner. The examiner may be directed by the Commissioner to furnish a written statement, within a specified time, setting forth the reasons for his decision upon the matters averred in the petition, supplying a copy thereof to the petitioner.
(d) Where a fee is required for a petition to the Commissioner the appropriate section of this part will so indicate. If any required fee does not accompany the petition, the petition will be dismissed. * * *
(f) Except as otherwise provided in these rules, any such petition not filed within 2 months from the action complained of, may be dismissed as untimely. The mere filing of a petition will not stay the period for reply to an Examiner's action which may be running against an application, nor act as a stay of other proceedings. * * *

Application No. 008/015,665

NOTE: The address data submitted in 1999 has been made of record, however, it appears that there is a difference some of the data as compared to Petitioner's latest filing. While a courtesy copy of this decision will be mailed to Petitioner, all future correspondence will be directed to the address of record until such time as appropriate instructions are received to the contrary.

For the reasons set forth below:

- the petition considered under 37 C.F.R. §1.181 to withdraw the holding of abandonment is **GRANTED**; and
- the petition under 37 C.F.R. §1.137(b) is **DISMISSED as moot**.[3]

BACKGROUND

A review of the record reveals:

- it appeared that the Applicant/Petitioner (Petitioner) failed to respond timely to the Notice of Allowance and Issue Fee Due mailed on 30 November, 1993, with response (payment of the Issue Fee) due under a non-extendable deadline on or before 28 February, 1994;
- Notice of Abandonment was mailed on 15 April, 1994;
- Petitioner submits, *inter alia*:

  (a) what purports to be copies of: (1) the Formal Drawings Transmittal dated 10 January, 1994, and (2) Petitioner's receipt card for said Transmittal date stamped as received by the Office on 13 January, 1994;

  (b) what purports to be copies of: (1) the Issue Fee Transmittal dated 9 February, 1994 (authorizing payment of the Issue Fee by charge to Deposit Account 08-3250), and (2) Petitioner's receipt card for said Issue Fee Transmittal date stamped as received by the Office on 13 February, 1994;

  (c) (1) a declaration of Counsel that no Notice of Abandonment was received, and (2) what purports to be a copy of the docket details for the instant application evidencing no receipt of such Notice;

[3] Pursuant to Petitioner's authorization, the petitioner fee ($1,280.00) is credited to Deposit Account 50-0616. The Terminal Disclaimer and fee are waived sua sponte.

(d) what purports to be a copy of a Status Request dated 22 August, 1995 (and, notably, the file contains the document date stamped as received on 25 August, 1995);

(e) what purports to be copies of: (1) a Status Request dated 6 January, 1999, with a Name and Address Change (and supporting documents), and (b) Petitioner's receipt card for said Request and Name and Address Change stamped as received by the Office on 13 January, 1999;

(f) what purports to be copies of: (1) a Status Request dated 21 April, 2000, and (b) Petitioner's receipt card for said Request stamped as received by the Office on 24 April, 2000; and

(g) what purports to be a copy of a Petitioner's incoming mail log/docket sheet for the instant application;

(h) what purports to be a copy of a Status Request dated 28 June, 2001, after which Petitioner indicates first receipt via FAX of the 15 April, 1994, Notice of Abandonment.

Petitioner submitted with the petition authorization for all fees, including the Issue Fee (the required reply).

The courts have determined the construct for properly supporting a petition seeking withdrawal of a holding of abandonment.[4]

CONCLUSION

Therefore , the petition considered under 37 C.F.R. §1.181 to withdraw the holding of abandonment is **granted**.

Accordingly, the holding of Abandonment is withdrawn, the Notice of Abandonment of 15 April, 1994, was mailed in error and is vacated, and the petition fee is waived.[5]

Thus, the petition under 37 C.F.R. §1.137(b) is **dismissed as moot**.

---

[4] See: Delgar v. Schulyer, 172 USPQ 513 (D.D.C. 1971).

[5] Pursuant to Petitioner's authorization, the petition fee ($1,280.00) is being refunded and the Issue Fee ($1,280.00) is being charged to Deposit Account 50-1616.

UNITED STATES PATENT AND TRADEMARK OFFICE

COMMISSIONER FOR PATENT
UNITED STATES PATENT AND TRADEMARK OFFIC
WASHINGTON, D.C. 2023
www.uspto.go

JJGJr.:11-02

Paper 16

PATENT DOCKET ADMINISTRATION
RAYTHEON COMPANY
BLDG. RE/R11/M365
P.O. BOX 902
EL SEGUNDO CA 90245-0902

COPY MAILED

NOV 1 2 2002

OFFICE OF PETITIONS

In re Application of
Bates, et al. :
Application No. 008/015,665 : ON PETITION
Filed: 9 February, 1993 :
Attorney Docket No.: PD-90138A :

This is a decision on the petition filed on 20 July, 2001 (and supplemented via FAX on 8 and 11 November, 2002), to revive under 37 C.F.R. §1.137(b),[1] and considered in light of the allegations as a petition to withdraw the holding of abandonment under 37 C.F.R. §1.181.[2]

The Office regrets the delay in addressing this matter.

---

[1] Effective December 1, 1997, the provisions of 37 C.F.R. §1.137(b) now provide that where the delay in reply was unintentional, a petition may be filed to revive an abandoned application or a lapsed patent pursuant to 37 C.F.R. §1.137(b). a grantable petition filed under the provisions of 37 C.F.R. §1.137(b) must be accompanied by:
(1) the required reply, unless previously filed. In a nonprovisional application abandoned for failure to prosecute, the required reply may be met by the filing of a continuing application. In an application or patent, abandoned or lapsed for failure to pay the issue fee or any portion thereof, the required reply must be the payment of the issue fee or any outstanding balance thereof.
(2) the petition fee as set forth in 37 C.F.R. §1.17(m);
(3) a statement that the entire delay in filing the required reply from the due date for the reply until the filing of a grantable petition pursuant to 37 C.F.R. §1.137(b) was unintentional. The Commissioner may require additional information where there is a question whether the delay was unintentional; and
(4) any terminal disclaimer (and fee set forth in 37 C.F.R. §1.20(d)) required pursuant to 37 C.F.R. §1.137(c). (Emphasis supplied.)

[2] The regulations at 37 C.F.R. §1.181 provide, in pertinent part:
§1.181 Petition to the Commissioner.
(a) Petition may be taken to the Commissioner: (1) From any action or requirement of any examiner in the *ex parte* prosecution of an application which is not subject to appeal to the Board of Patent Appeals and Interferences or to the court; (2) In cases in which a statute or the rules specify that the matter is to be determined directly by or reviewed by the Commissioner; and (3) To invoke the supervisory authority of the Commissioner in appropriate circumstances. * * *
(b) Any such petition must contain a statement of the facts involved and the point or points to be reviewed and the action requested. Brief or memoranda, if any, in support thereof should accompany or be embodied in the petition; and where facts are to be proven, the proof in the form of affidavits or declaration (and exhibits, if any) must accompany the petition.
© When a petition is taken from an action or requirement of an examiner in the *ex parte* prosecution of an application, it may be required that there have been a proper request for reconsideration (§1.111) and a repeated action by the examiner. The examiner may be directed by the Commissioner to furnish a written statement, within a specified time, setting forth the reasons for his decision upon the matters averred in the petition, supplying a copy thereof to the petitioner.
(d) Where a fee is required for a petition to the Commissioner the appropriate section of this part will so indicate. If any required fee does not accompany the petition, the petition will be dismissed. * * *
(f) Except as otherwise provided in these rules, any such petition not filed within 2 months from the action complained of, may be dismissed as untimely. The mere filing of a petition will not stay the period for reply to an Examiner's action which may be running against an application, nor act as a stay of other proceedings. * * *

NOTE: The address data submitted in 1999 has been made of record, however, it appears that there is a difference some of the data as compared to Petitioner's latest filing. While a courtesy copy of this decision will be mailed to Petitioner, all future correspondence will be directed to the address of record until such time as appropriate instructions are received to the contrary.

For the reasons set forth below:

- the petition considered under 37 C.F.R. §1.181 to withdraw the holding of abandonment is **GRANTED**; and
- the petition under 37 C.F.R. §1.137(b) is **DISMISSED as moot**.[3]

BACKGROUND

A review of the record reveals:

- it appeared that the Applicant/Petitioner (Petitioner) failed to respond timely to the Notice of Allowance and Issue Fee Due mailed on 30 November, 1993, with response (payment of the Issue Fee) due under a non-extendable deadline on or before 28 February, 1994;
- Notice of Abandonment was mailed on 15 April, 1994;
- Petitioner submits, *inter alia*:

  (a) what purports to be copies of: (1) the Formal Drawings Transmittal dated 10 January, 1994, and (2) Petitioner's receipt card for said Transmittal date stamped as received by the Office on 13 January, 1994;

  (b) what purports to be copies of: (1) the Issue Fee Transmittal dated 9 February, 1994 (authorizing payment of the Issue Fee by charge to Deposit Account 08-3250), and (2) Petitioner's receipt card for said Issue Fee Transmittal date stamped as received by the Office on 13 February, 1994;

  (c) (1) a declaration of Counsel that no Notice of Abandonment was received, and (2) what purports to be a copy of the docket details for the instant application evidencing no receipt of such Notice;

---

[3] Pursuant to Petitioner's authorization, the petitioner fee ($1,280.00) is credited to Deposit Account 50-0616. The Terminal Disclaimer and fee are waived sua sponte.

(d) what purports to be a copy of a Status Request dated 22 August, 1995 (and, notably, the file contains the document date stamped as received on 25 August, 1995);

(e) what purports to be copies of: (1) a Status Request dated 6 January, 1999, with a Name and Address Change (and supporting documents), and (b) Petitioner's receipt card for said Request and Name and Address Change stamped as received by the Office on 13 January, 1999;

(f) what purports to be copies of: (1) a Status Request dated 21 April, 2000, and (b) Petitioner's receipt card for said Request stamped as received by the Office on 24 April, 2000; and

(g) what purports to be a copy of a Petitioner's incoming mail log/docket sheet for the instant application;

(h) what purports to be a copy of a Status Request dated 28 June, 2001, after which Petitioner indicates first receipt via FAX of the 15 April, 1994, Notice of Abandonment.

Petitioner submitted with the petition authorization for all fees, including the Issue Fee (the required reply).

The courts have determined the construct for properly supporting a petition seeking withdrawal of a holding of abandonment.[4]

CONCLUSION

Therefore , the petition considered under 37 C.F.R. §1.181 to withdraw the holding of abandonment is **granted**.

Accordingly, the holding of Abandonment is withdrawn, the Notice of Abandonment of 15 April, 1994, was mailed in error and is vacated, and the petition fee is waived.[5]

Thus, the petition under 37 C.F.R. §1.137(b) is **dismissed as moot**.

---

[4] See: Delgar v. Schulyer, 172 USPQ 513 (D.D.C. 1971).

[5] Pursuant to Petitioner's authorization, the petition fee ($1,280.00) is being refunded and the Issue Fee ($1,280.00) is being charged to Deposit Account 50-1616.

This application is being forwarded to Publications Branch to be processed into a patent.

Telephone inquiries regarding this decision may be directed to the undersigned at (703) 305-9199.

John J. Gillon, Jr.
Senior Attorney
Office of Petitions
Office of the Deputy Commissioner
for Patent Examination Policy

cc:
Colin Raufer
Raytheon Company
P.O. Box 902
Bldg. E01, M/S E150
20000 E. El Segundo Boulevard
El Segundo, CA 90245-0902

Under the Paperwork Reduction Act of 1995, no persons are required to respond to a collection of information unless it displays valid OMB control number.

PETITION TO ACCEPT UNINTENTIONALLY DELAYED PAYMENT OF MAINTENANCE FEE IN AN EXPIRED PATENT (37 CFR 1.378(c))

Patent Number	Issue Date (YYYY-MM-DD)	Application Number	Filing Date (YYYY-MM-DD)	Docket Number (if applicable)
5316483	1994-05-31	08015777	1993-02-10	

CAUTION: Maintenance fee (and surcharge, if any) payment must correctly identify: (1) the patent number and (2) the application number of the actual U.S. application leading to issuance of that patent to ensure the fee(s) is/are associated with the correct patent. 37 CFR 1.366(c) and (d).

SMALL ENTITY
☒ Patentee claims, or has previously claimed, small entity status. See 37 CFR 1.27.

LOSS OF ENTITLEMENT TO SMALL ENTITY STATUS
☐ Patentee is no longer entitled to small entity status. See 37 CFR 1.27(g)

NOT Small Entity		Small Entity	
Fee	Code	Fee	Code
○ 3 ½ year	(1551)	○ 3 ½ year	(2551)
○ 7 ½ year	(1552)	○ 7 ½ year	(2552)
○ 11 ½ year	(1553)	◉ 11 ½ year	(2553)

SURCHARGE
The surcharge required by 37 CFR 1.20(i)(2) (Fee Code 1558) must be paid as a condition of accepting unintentionally delayed payment of the maintenance fee.

MAINTENANCE FEE (37 CFR 1.20(e)-(g))
The appropriate maintenance fee must be submitted with this petition.

STATEMENT
THE UNDERSIGNED CERTIFIES THAT THE DELAY IN PAYMENT OF THE MAINTENANCE FEE TO THIS PATENT WAS UNINTENTIONAL

PETITIONER(S) REQUEST THAT THE DELAYED PAYMENT OF THE MAINTENANCE FEE BE ACCEPTED AND THE PATENT REINSTATED

THIS PORTION MUST BE COMPLETED BY THE SIGNATORY OR SIGNATORIES

37 CFR 1.378(d) states: "Any petition under this section must be signed by an attorney or agent registered to practice before the Patent and Trademark Office, or by the patentee, the assignee, or other party in interest."

I certify, in accordance with 37 CFR 1.4(d)(4) that I am

○ An attorney or agent registered to practice before the Patent and Trademark Office

◉ A sole patentee

○ A joint patentee; I certify that I am authorized to sign this submission on behalf of all the other patentees.

○ A joint patentee; all of whom are signing this e-petition

○ The assignee of record of the entire interest

Sole Patentee			
A signature of the applicant or representative is required in accordance with 37 CFR 1.33 and 10.18. Please see 37 CFR 1.4(d) for the form of the signature.			
Signature	/Richard B Esterle/	Date (YYYY-MM-DD)	2007-12-19
Name	Richard B Esterle		

This collection of information is required by 37 CFR 1.378(c). The information is required to obtain or retain a benefit by the public which is to file (and by the USPTO to process) an application. Confidentiality is governed by 35 U.S.C. 122 and 37 CFR 1.11 and 1.14. This collection is estimated to take 1 hour to complete, including gathering, preparing, and submitting the completed application form to the USPTO. Time will vary depending upon the individual case. Any comments on the amount of time you require to complete this form and/ or suggestions for reducing this burden, should be sent to the Chief Information Officer, U.S. Patent and Trademark Office, U.S. Department of Commerce, P.O. Box 1450, Alexandria, VA 22313-1450. DO NOT SEND FEES OR COMPLETED FORMS TO THIS ADDRESS. **This form can only be used when in conjunction with EFS-Web. If this form is mailed to the USPTO, it may cause delays in reinstating the patent.**

Privacy Act Statement

The Privacy Act of 1974 (P.L. 93-579) requires that you be given certain information in connection with your submission of the attached form related to a patent application or patent. Accordingly, pursuant to the requirements of the Act, please be advised that: (1) the general authority for the collection of this information is 35 U.S.C. 2(b)(2); (2) furnishing of the information solicited is voluntary; and (3) the principal purpose for which the information is used by the U.S. Patent and Trademark Office is to process and/or examine your submission related to a patent application or patent. If you do not furnish the requested information, the U.S. Patent and Trademark Office may not be able to process and/or examine your submission, which may result in termination of proceedings or abandonment of the application or expiration of the patent.

The information provided by you in this form will be subject to the following routine uses:

1. The information on this form will be treated confidentially to the extent allowed under the Freedom of Information Act (5 U.S.C. 552) and the Privacy Act (5 U.S.C. 552a). Records from this system of records may be disclosed to the Department of Justice to determine whether the Freedom of Information Act requires disclosure of these record s.

2. A record from this system of records may be disclosed, as a routine use, in the course of presenting evidence to a court, magistrate, or administrative tribunal, including disclosures to opposing counsel in the course of settlement negotiations.

3. A record in this system of records may be disclosed, as a routine use, to a Member of Congress submitting a request involving an individual, to whom the record pertains, when the individual has requested assistance from the Member with respect to the subject matter of the record.

4. A record in this system of records may be disclosed, as a routine use, to a contractor of the Agency having need for the information in order to perform a contract. Recipients of information shall be required to comply with the requirements of the Privacy Act of 1974, as amended, pursuant to 5 U.S.C. 552a(m).

5. A record related to an International Application filed under the Patent Cooperation Treaty in this system of records may be disclosed, as a routine use, to the International Bureau of the World Intellectual Property Organization, pursuant to the Patent Cooperation Treaty.

6. A record in this system of records may be disclosed, as a routine use, to another federal agency for purposes of National Security review (35 U.S.C. 181) and for review pursuant to the Atomic Energy Act (42 U.S.C. 218(c)).

7. A record from this system of records may be disclosed, as a routine use, to the Administrator, General Services, or his/her designee, during an inspection of records conducted by GSA as part of that agency's responsibility to recommend improvements in records management practices and programs, under authority of 44 U.S.C. 2904 and 2906. Such disclosure shall be made in accordance with the GSA regulations governing inspection of records for this purpose, and any other relevant (i.e., GSA or Commerce) directive. Such disclosure shall not be used to make determinations about individuals.

8. A record from this system of records may be disclosed, as a routine use, to the public after either publication of the application pursuant to 35 U.S.C. 122(b) or issuance of a patent pursuant to 35 U.S.C. 151. Further, a record may be disclosed, subject to the limitations of 37 CFR 1.14, as a routine use, to the public if the record was filed in an application which became abandoned or in which the proceedings were terminated and which application is referenced by either a published application, an application open to public inspections or an issued patent.

9. A record from this system of records may be disclosed, as a routine use, to a Federal, State, or local law enforcement agency, if the USPTO becomes aware of a violation or potential violation of law or regulation.

UNITED STATES PATENT AND TRADEMARK OFFICE

Commissioner for Patents
United States Patent and Trademark Office
P.O. Box 1450
Alexandria, VA 22313-1450
www.uspto.gov

In re Patent No. 5316483
Issue Date: May 31,1994
Application No. 08015777
Filed: February 10,1993
Attorney Docket No. 2179-4000

:
:DECISION GRANTING PETITION
:UNDER 37 CFR 1.378(c)
:

This is a decision on the electronic petition, filed December 19,2007 ,under 37 CFR 1.378(c) to accept the unintentionally delayed payment of the 11.5 year maintenance fee for the above-identified patent.

The petition is GRANTED.

The maintenance fee is accepted, and the above-identified patent reinstated as of December 19,2007. This decision also constitutes notice that the fee has been accepted. An electronic copy of the petition and this decision has been created as an entry in an Image File Wrapper. Nevertheless, petitioner should print and retain an independent copy

Telephone inquires related to this electronic decision should be directed to the Electronic Business Center at 1-866-217-9197.

Under the Paperwork Reduction Act of 1995, no persons are required to respond to a collection of information unless it displays valid OMB control number.

PETITION TO ACCEPT UNINTENTIONALLY DELAYED PAYMENT OF MAINTENANCE FEE IN AN EXPIRED PATENT (37 CFR 1.378(c))

Patent Number	Issue Date (YYYY-MM-DD)	Application Number	Filing Date (YYYY-MM-DD)	Docket Number (if applicable)
5406956	1995-04-18	08/016,215	1993-02-11	2754

CAUTION: Maintenance fee (and surcharge, if any) payment must correctly identify: (1) the patent number and (2) the application number of the actual U.S. application leading to issuance of that patent to ensure the fee(s) is/are associated with the correct patent. 37 CFR 1.366(c) and (d).

SMALL ENTITY
☒ Patentee claims, or has previously claimed, small entity status. See 37 CFR 1.27.

LOSS OF ENTITLEMENT TO SMALL ENTITY STATUS
☐ Patentee is no longer entitled to small entity status. See 37 CFR 1.27(g)

NOT Small Entity			Small Entity		
	Fee	Code		Fee	Code
○	3 ½ year	(1551)	○	3 ½ year	(2551)
○	7 ½ year	(1552)	○	7 ½ year	(2552)
○	11 ½ year	(1553)	◉	11 ½ year	(2553)

SURCHARGE
The surcharge required by 37 CFR 1.20(i)(2) (Fee Code 1558) must be paid as a condition of accepting unintentionally delayed payment of the maintenance fee.

MAINTENANCE FEE (37 CFR 1.20(e)-(g))
The appropriate maintenance fee must be submitted with this petition.

STATEMENT
THE UNDERSIGNED CERTIFIES THAT THE DELAY IN PAYMENT OF THE MAINTENANCE FEE TO THIS PATENT WAS UNINTENTIONAL

PETITIONER(S) REQUEST THAT THE DELAYED PAYMENT OF THE MAINTENANCE FEE BE ACCEPTED AND THE PATENT REINSTATED

THIS PORTION MUST BE COMPLETED BY THE SIGNATORY OR SIGNATORIES

37 CFR 1.378(d) states: "Any petition under this section must be signed by an attorney or agent registered to practice before the Patent and Trademark Office, or by the patentee, the assignee, or other party in interest."

I certify, in accordance with 37 CFR 1.4(d)(4) that I am

◉ An attorney or agent registered to practice before the Patent and Trademark Office

○ A sole patentee

○ A joint patentee; I certify that I am authorized to sign this submission on behalf of all the other patentees.

○ A joint patentee; all of whom are signing this e-petition

○ The assignee of record of the entire interest

Patent Practitioner			
A signature of the applicant or representative is required in accordance with 37 CFR 1.33 and 10.18. Please see 37 CFR 1.4(d) for the form of the signature			
Signature	/Charles E. Bruzga/	Date (YYYY-MM-DD)	2007-10-03
Name	Charles E. Bruzga	Registration Number	28935

This collection of information is required by 37 CFR 1.378(c). The information is required to obtain or retain a benefit by the public which is to file (and by the USPTO to process) an application. Confidentiality is governed by 35 U.S.C. 122 and 37 CFR 1.11 and 1.14. This collection is estimated to take 1 hour to complete, including gathering, preparing, and submitting the completed application form to the USPTO. Time will vary depending upon the individual case. Any comments on the amount of time you require to complete this form and/ or suggestions for reducing this burden, should be sent to the Chief Information Officer, U.S. Patent and Trademark Office, U.S. Department of Commerce, P.O. Box 1450, Alexandria, VA 22313-1450. DO NOT SEND FEES OR COMPLETED FORMS TO THIS ADDRESS. **This form can only be used when in conjunction with EFS-Web. If this form is mailed to the USPTO, it may cause delays in reinstating the patent.**

Privacy Act Statement

The Privacy Act of 1974 (P.L. 93-579) requires that you be given certain information in connection with your submission of the attached form related to a patent application or patent. Accordingly, pursuant to the requirements of the Act, please be advised that: (1) the general authority for the collection of this information is 35 U.S.C. 2(b)(2); (2) furnishing of the information solicited is voluntary; and (3) the principal purpose for which the information is used by the U.S. Patent and Trademark Office is to process and/or examine your submission related to a patent application or patent. If you do not furnish the requested information, the U.S. Patent and Trademark Office may not be able to process and/or examine your submission, which may result in termination of proceedings or abandonment of the application or expiration of the patent.

The information provided by you in this form will be subject to the following routine uses:

1. The information on this form will be treated confidentially to the extent allowed under the Freedom of Information Act (5 U.S.C. 552) and the Privacy Act (5 U.S.C. 552a). Records from this system of records may be disclosed to the Department of Justice to determine whether the Freedom of Information Act requires disclosure of these record s.

2. A record from this system of records may be disclosed, as a routine use, in the course of presenting evidence to a court, magistrate, or administrative tribunal, including disclosures to opposing counsel in the course of settlement negotiations.

3. A record in this system of records may be disclosed, as a routine use, to a Member of Congress submitting a request involving an individual, to whom the record pertains, when the individual has requested assistance from the Member with respect to the subject matter of the record.

4. A record in this system of records may be disclosed, as a routine use, to a contractor of the Agency having need for the information in order to perform a contract. Recipients of information shall be required to comply with the requirements of the Privacy Act of 1974, as amended, pursuant to 5 U.S.C. 552a(m).

5. A record related to an International Application filed under the Patent Cooperation Treaty in this system of records may be disclosed, as a routine use, to the International Bureau of the World Intellectual Property Organization, pursuant to the Patent Cooperation Treaty.

6. A record in this system of records may be disclosed, as a routine use, to another federal agency for purposes of National Security review (35 U.S.C. 181) and for review pursuant to the Atomic Energy Act (42 U.S.C. 218(c)).

7. A record from this system of records may be disclosed, as a routine use, to the Administrator, General Services, or his/her designee, during an inspection of records conducted by GSA as part of that agency's responsibility to recommend improvements in records management practices and programs, under authority of 44 U.S.C. 2904 and 2906. Such disclosure shall be made in accordance with the GSA regulations governing inspection of records for this purpose, and any other relevant (i.e., GSA or Commerce) directive. Such disclosure shall not be used to make determinations about individuals.

8. A record from this system of records may be disclosed, as a routine use, to the public after either publication of the application pursuant to 35 U.S.C. 122(b) or issuance of a patent pursuant to 35 U.S.C. 151. Further, a record may be disclosed, subject to the limitations of 37 CFR 1.14, as a routine use, to the public if the record was filed in an application which became abandoned or in which the proceedings were terminated and which application is referenced by either a published application, an application open to public inspections or an issued patent.

9. A record from this system of records may be disclosed, as a routine use, to a Federal, State, or local law enforcement agency, if the USPTO becomes aware of a violation or potential violation of law or regulation.

UNITED STATES PATENT AND TRADEMARK OFFICE

Commissioner for Patents
United States Patent and Trademark Office
P.O. Box 1450
Alexandria, VA 22313-1450
www.uspto.gov

In re Patent No. 5406956
Issue Date: April 18,1995
Application No. 08016215
Filed: February 11,1993
Attorney Docket No. 012648002

:

:DECISION GRANTING PETITION
:UNDER 37 CFR 1.378(c)

:

This is a decision on the electronic petition, filed October 3,2007 ,under 37 CFR 1.378(c) to accept the unintentionally delayed payment of the 11.5 year maintenance fee for the above-identified patent.

The petition is GRANTED.

The maintenance fee is accepted, and the above-identified patent reinstated as of October 3,2007 . This decision also constitutes notice that the fee has been accepted. An electronic copy of the petition and this decision has been created as an entry in an Image File Wrapper. Nevertheless, petitioner should print and retain an independent copy

Telephone inquires related to this electronic decision should be directed to the Electronic Business Center at 1-866-217-9197.

Under the Paperwork Reduction Act of 1995, no persons are required to respond to a collection of information unless it displays valid OMB control number.

PETITION TO ACCEPT UNINTENTIONALLY DELAYED PAYMENT OF MAINTENANCE FEE IN AN EXPIRED PATENT (37 CFR 1.378(c))

Patent Number	Issue Date (YYYY-MM-DD)	Application Number	Filing Date (YYYY-MM-DD)	Docket Number (if applicable)
5,336,398	1994-08-09	08/016,788	1993-02-11	REED1008

CAUTION: Maintenance fee (and surcharge, if any) payment must correctly identify: (1) the patent number and (2) the application number of the actual U.S. application leading to issuance of that patent to ensure the fee(s) is/are associated with the correct patent. 37 CFR 1.366(c) and (d).

SMALL ENTITY
☒ Patentee claims, or has previously claimed, small entity status. See 37 CFR 1.27.

LOSS OF ENTITLEMENT TO SMALL ENTITY STATUS
☐ Patentee is no longer entitled to small entity status. See 37 CFR 1.27(g)

NOT Small Entity			Small Entity		
	Fee	Code		Fee	Code
○	3 ½ year	(1551)	○	3 ½ year	(2551)
○	7 ½ year	(1552)	○	7 ½ year	(2552)
○	11 ½ year	(1553)	◉	11 ½ year	(2553)

SURCHARGE
The surcharge required by 37 CFR 1.20(i)(2) (Fee Code 1558) must be paid as a condition of accepting unintentionally delayed payment of the maintenance fee.

MAINTENANCE FEE (37 CFR 1.20(e)-(g))
The appropriate maintenance fee must be submitted with this petition.

STATEMENT
THE UNDERSIGNED CERTIFIES THAT THE DELAY IN PAYMENT OF THE MAINTENANCE FEE TO THIS PATENT WAS UNINTENTIONAL

PETITIONER(S) REQUEST THAT THE DELAYED PAYMENT OF THE MAINTENANCE FEE BE ACCEPTED AND THE PATENT REINSTATED

THIS PORTION MUST BE COMPLETED BY THE SIGNATORY OR SIGNATORIES

37 CFR 1.378(d) states: "Any petition under this section must be signed by an attorney or agent registered to practice before the Patent and Trademark Office, or by the patentee, the assignee, or other party in interest."

I certify, in accordance with 37 CFR 1.4(d)(4) that I am

◉ An attorney or agent registered to practice before the Patent and Trademark Office

○ A sole patentee

○ A joint patentee; I certify that I am authorized to sign this submission on behalf of all the other patentees.

○ A joint patentee; all of whom are signing this e-petition

○ The assignee of record of the entire interest

Patent Practitioner			
A signature of the applicant or representative is required in accordance with 37 CFR 1.33 and 10.18. Please see 37 CFR 1.4(d) for the form of the signature			
Signature	/Karry W. Wang/	Date (YYYY-MM-DD)	2008-02-29
Name	Karry W. Wang	Registration Number	50178

This collection of information is required by 37 CFR 1.378(c). The information is required to obtain or retain a benefit by the public which is to file (and by the USPTO to process) an application. Confidentiality is governed by 35 U.S.C. 122 and 37 CFR 1.11 and 1.14. This collection is estimated to take 1 hour to complete, including gathering, preparing, and submitting the completed application form to the USPTO. Time will vary depending upon the individual case. Any comments on the amount of time you require to complete this form and/ or suggestions for reducing this burden, should be sent to the Chief Information Officer, U.S. Patent and Trademark Office, U.S. Department of Commerce, P.O. Box 1450, Alexandria, VA 22313-1450. DO NOT SEND FEES OR COMPLETED FORMS TO THIS ADDRESS. **This form can only be used when in conjunction with EFS-Web. If this form is mailed to the USPTO, it may cause delays in reinstating the patent.**

Privacy Act Statement

The Privacy Act of 1974 (P.L. 93-579) requires that you be given certain information in connection with your submission of the attached form related to a patent application or patent. Accordingly, pursuant to the requirements of the Act, please be advised that: (1) the general authority for the collection of this information is 35 U.S.C. 2(b)(2); (2) furnishing of the information solicited is voluntary; and (3) the principal purpose for which the information is used by the U.S. Patent and Trademark Office is to process and/or examine your submission related to a patent application or patent. If you do not furnish the requested information, the U.S. Patent and Trademark Office may not be able to process and/or examine your submission, which may result in termination of proceedings or abandonment of the application or expiration of the patent.

The information provided by you in this form will be subject to the following routine uses:

1. The information on this form will be treated confidentially to the extent allowed under the Freedom of Information Act (5 U.S.C. 552) and the Privacy Act (5 U.S.C. 552a). Records from this system of records may be disclosed to the Department of Justice to determine whether the Freedom of Information Act requires disclosure of these record s.

2. A record from this system of records may be disclosed, as a routine use, in the course of presenting evidence to a court, magistrate, or administrative tribunal, including disclosures to opposing counsel in the course of settlement negotiations.

3. A record in this system of records may be disclosed, as a routine use, to a Member of Congress submitting a request involving an individual, to whom the record pertains, when the individual has requested assistance from the Member with respect to the subject matter of the record.

4. A record in this system of records may be disclosed, as a routine use, to a contractor of the Agency having need for the information in order to perform a contract. Recipients of information shall be required to comply with the requirements of the Privacy Act of 1974, as amended, pursuant to 5 U.S.C. 552a(m).

5. A record related to an International Application filed under the Patent Cooperation Treaty in this system of records may be disclosed, as a routine use, to the International Bureau of the World Intellectual Property Organization, pursuant to the Patent Cooperation Treaty.

6. A record in this system of records may be disclosed, as a routine use, to another federal agency for purposes of National Security review (35 U.S.C. 181) and for review pursuant to the Atomic Energy Act (42 U.S.C. 218(c)).

7. A record from this system of records may be disclosed, as a routine use, to the Administrator, General Services, or his/her designee, during an inspection of records conducted by GSA as part of that agency's responsibility to recommend improvements in records management practices and programs, under authority of 44 U.S.C. 2904 and 2906. Such disclosure shall be made in accordance with the GSA regulations governing inspection of records for this purpose, and any other relevant (i.e., GSA or Commerce) directive. Such disclosure shall not be used to make determinations about individuals.

8. A record from this system of records may be disclosed, as a routine use, to the public after either publication of the application pursuant to 35 U.S.C. 122(b) or issuance of a patent pursuant to 35 U.S.C. 151. Further, a record may be disclosed, subject to the limitations of 37 CFR 1.14, as a routine use, to the public if the record was filed in an application which became abandoned or in which the proceedings were terminated and which application is referenced by either a published application, an application open to public inspections or an issued patent.

9. A record from this system of records may be disclosed, as a routine use, to a Federal, State, or local law enforcement agency, if the USPTO becomes aware of a violation or potential violation of law or regulation.

UNITED STATES PATENT AND TRADEMARK OFFICE

Commissioner for Patents
United States Patent and Trademark Office
P.O. Box 1450
Alexandria, VA 22313-1450
www.uspto.gov

In re Patent No. 5336398
Issue Date: August 9,1994
Application No. 08016788
Filed: February 11,1993
Attorney Docket No. CCLD00200

:

:DECISION GRANTING PETITION
:UNDER 37 CFR 1.378(c)

:

This is a decision on the electronic petition, filed February 29,2008 ,under 37 CFR 1.378(c) to accept the unintentionally delayed payment of the 11.5 year maintenance fee for the above-identified patent.

The petition is GRANTED.

The maintenance fee is accepted, and the above-identified patent reinstated as of February 29,2008 . This decision also constitutes notice that the fee has been accepted. An electronic copy of the petition and this decision has been created as an entry in an Image File Wrapper. Nevertheless, petitioner should print and retain an independent copy

Telephone inquires related to this electronic decision should be directed to the Electronic Business Center at 1-866-217-9197.

Approved for use through 04/30/2009. OMB 0651-0016
U.S. Patent and Trademark Office: U.S. DEPARTMENT OF COMMERCE
Under the Paperwork Reduction Act of 1995, no persons are required to respond to a collection of information unless it displays valid OMB control number.

PETITION TO ACCEPT UNINTENTIONALLY DELAYED PAYMENT OF MAINTENANCE FEE IN AN EXPIRED PATENT (37 CFR 1.378(c))

Patent Number	Issue Date (YYYY-MM-DD)	Application Number	Filing Date (YYYY-MM-DD)	Docket Number (if applicable)
5,356,475	1994-10-18	08/021,009	1993-02-22	LLC-2128

CAUTION: Maintenance fee (and surcharge, if any) payment must correctly identify: (1) the patent number and (2) the application number of the actual U.S. application leading to issuance of that patent to ensure the fee(s) is/are associated with the correct patent. 37 CFR 1.366(c) and (d).

SMALL ENTITY
☐ Patentee claims, or has previously claimed, small entity status. See 37 CFR 1.27.

LOSS OF ENTITLEMENT TO SMALL ENTITY STATUS
☐ Patentee is no longer entitled to small entity status. See 37 CFR 1.27(g)

NOT Small Entity		Small Entity	
Fee	Code	Fee	Code
○ 3 ½ year	(1551)	○ 3 ½ year	(2551)
○ 7 ½ year	(1552)	○ 7 ½ year	(2552)
◉ 11 ½ year	(1553)	○ 11 ½ year	(2553)

SURCHARGE
The surcharge required by 37 CFR 1.20(i)(2) (Fee Code 1558) must be paid as a condition of accepting unintentionally delayed payment of the maintenance fee.

MAINTENANCE FEE (37 CFR 1.20(e)-(g))
The appropriate maintenance fee must be submitted with this petition.

STATEMENT
THE UNDERSIGNED CERTIFIES THAT THE DELAY IN PAYMENT OF THE MAINTENANCE FEE TO THIS PATENT WAS UNINTENTIONAL

PETITIONER(S) REQUEST THAT THE DELAYED PAYMENT OF THE MAINTENANCE FEE BE ACCEPTED AND THE PATENT REINSTATED

THIS PORTION MUST BE COMPLETED BY THE SIGNATORY OR SIGNATORIES

37 CFR 1.378(d) states: "Any petition under this section must be signed by an attorney or agent registered to practice before the Patent and Trademark Office, or by the patentee, the assignee, or other party in interest."

I certify, in accordance with 37 CFR 1.4(d)(4) that I am

◉ An attorney or agent registered to practice before the Patent and Trademark Office

○ A sole patentee

○ A joint patentee; I certify that I am authorized to sign this submission on behalf of all the other patentees.

○ A joint patentee; all of whom are signing this e-petition

○ The assignee of record of the entire interest

Patent Practitioner			
A signature of the applicant or representative is required in accordance with 37 CFR 1.33 and 10.18. Please see 37 CFR 1.4(d) for the form of the signature			
Signature	/Christopher P. Maiorana/	Date (YYYY-MM-DD)	2007-03-30
Name	Christopher P. Maiorana	Registration Number	42829

This collection of information is required by 37 CFR 1.378(c). The information is required to obtain or retain a benefit by the public which is to file (and by the USPTO to process) an application. Confidentiality is governed by 35 U.S.C. 122 and 37 CFR 1.11 and 1.14. This collection is estimated to take 1 hour to complete, including gathering, preparing, and submitting the completed application form to the USPTO. Time will vary depending upon the individual case. Any comments on the amount of time you require to complete this form and/ or suggestions for reducing this burden, should be sent to the Chief Information Officer, U.S. Patent and Trademark Office, U.S. Department of Commerce, P.O. Box 1450, Alexandria, VA 22313-1450. DO NOT SEND FEES OR COMPLETED FORMS TO THIS ADDRESS. **This form can only be used when in conjunction with EFS-Web. If this form is mailed to the USPTO, it may cause delays in reinstating the patent.**

Privacy Act Statement

The Privacy Act of 1974 (P.L. 93-579) requires that you be given certain information in connection with your submission of the attached form related to a patent application or patent. Accordingly, pursuant to the requirements of the Act, please be advised that: (1) the general authority for the collection of this information is 35 U.S.C. 2(b)(2); (2) furnishing of the information solicited is voluntary; and (3) the principal purpose for which the information is used by the U.S. Patent and Trademark Office is to process and/or examine your submission related to a patent application or patent. If you do not furnish the requested information, the U.S. Patent and Trademark Office may not be able to process and/or examine your submission, which may result in termination of proceedings or abandonment of the application or expiration of the patent.

The information provided by you in this form will be subject to the following routine uses:

1. The information on this form will be treated confidentially to the extent allowed under the Freedom of Information Act (5 U.S.C. 552) and the Privacy Act (5 U.S.C. 552a). Records from this system of records may be disclosed to the Department of Justice to determine whether the Freedom of Information Act requires disclosure of these record s.

2. A record from this system of records may be disclosed, as a routine use, in the course of presenting evidence to a court, magistrate, or administrative tribunal, including disclosures to opposing counsel in the course of settlement negotiations.

3. A record in this system of records may be disclosed, as a routine use, to a Member of Congress submitting a request involving an individual, to whom the record pertains, when the individual has requested assistance from the Member with respect to the subject matter of the record.

4. A record in this system of records may be disclosed, as a routine use, to a contractor of the Agency having need for the information in order to perform a contract. Recipients of information shall be required to comply with the requirements of the Privacy Act of 1974, as amended, pursuant to 5 U.S.C. 552a(m).

5. A record related to an International Application filed under the Patent Cooperation Treaty in this system of records may be disclosed, as a routine use, to the International Bureau of the World Intellectual Property Organization, pursuant to the Patent Cooperation Treaty.

6. A record in this system of records may be disclosed, as a routine use, to another federal agency for purposes of National Security review (35 U.S.C. 181) and for review pursuant to the Atomic Energy Act (42 U.S.C. 218(c)).

7. A record from this system of records may be disclosed, as a routine use, to the Administrator, General Services, or his/her designee, during an inspection of records conducted by GSA as part of that agency's responsibility to recommend improvements in records management practices and programs, under authority of 44 U.S.C. 2904 and 2906. Such disclosure shall be made in accordance with the GSA regulations governing inspection of records for this purpose, and any other relevant (i.e., GSA or Commerce) directive. Such disclosure shall not be used to make determinations about individuals.

8. A record from this system of records may be disclosed, as a routine use, to the public after either publication of the application pursuant to 35 U.S.C. 122(b) or issuance of a patent pursuant to 35 U.S.C. 151. Further, a record may be disclosed, subject to the limitations of 37 CFR 1.14, as a routine use, to the public if the record was filed in an application which became abandoned or in which the proceedings were terminated and which application is referenced by either a published application, an application open to public inspections or an issued patent.

9. A record from this system of records may be disclosed, as a routine use, to a Federal, State, or local law enforcement agency, if the USPTO becomes aware of a violation or potential violation of law or regulation.

UNITED STATES PATENT AND TRADEMARK OFFICE

Commissioner for Patents
United States Patent and Trademark Office
P.O. Box 1450
Alexandria, VA 22313-1450
www.uspto.gov

In re Patent No. 5356475
Issue Date: October 18,1994
Application No. 08021009
Filed: February 22,1993
Attorney Docket No. LLC-2128

:
:DECISION GRANTING PETITION
:UNDER 37 CFR 1.378(c)
:

This is a decision on the electronic petition, filed March 30,2007 ,under 37 CFR 1.378(c) to accept the unintentionally delayed payment of the 11.5 year maintenance fee for the above-identified patent.

The petition is GRANTED.

The maintenance fee is accepted, and the above-identified patent reinstated as of March 30,2007 . This decision also constitutes notice that the fee has been accepted. An electronic copy of the petition and this decision has been created as an entry in an Image File Wrapper. Nevertheless, petitioner should print and retain an independent copy

Telephone inquires related to this electronic decision should be directed to the Electronic Business Center at 1-866-217-9197.

Approved for use through 04/30/2009. OMB 0651-0016
U.S. Patent and Trademark Office: U.S. DEPARTMENT OF COMMERCE
Under the Paperwork Reduction Act of 1995, no persons are required to respond to a collection of information unless it displays valid OMB control number.

PETITION TO ACCEPT UNINTENTIONALLY DELAYED PAYMENT OF MAINTENANCE FEE IN AN EXPIRED PATENT (37 CFR 1.378(c))

Patent Number	Issue Date (YYYY-MM-DD)	Application Number	Filing Date (YYYY-MM-DD)	Docket Number (if applicable)
5,362,353	1994-11-08	08/023,305	1993-02-26	LLC-2125

CAUTION: Maintenance fee (and surcharge, if any) payment must correctly identify: (1) the patent number and (2) the application number of the actual U.S. application leading to issuance of that patent to ensure the fee(s) is/are associated with the correct patent. 37 CFR 1.366(c) and (d).

SMALL ENTITY
☐ Patentee claims, or has previously claimed, small entity status. See 37 CFR 1.27.

LOSS OF ENTITLEMENT TO SMALL ENTITY STATUS
☐ Patentee is no longer entitled to small entity status. See 37 CFR 1.27(g)

NOT Small Entity		Small Entity	
Fee	Code	Fee	Code
○ 3 ½ year	(1551)	○ 3 ½ year	(2551)
○ 7 ½ year	(1552)	○ 7 ½ year	(2552)
◉ 11 ½ year	(1553)	○ 11 ½ year	(2553)

SURCHARGE
The surcharge required by 37 CFR 1.20(i)(2) (Fee Code 1558) must be paid as a condition of accepting unintentionally delayed payment of the maintenance fee.

MAINTENANCE FEE (37 CFR 1.20(e)-(g))
The appropriate maintenance fee must be submitted with this petition.

STATEMENT
THE UNDERSIGNED CERTIFIES THAT THE DELAY IN PAYMENT OF THE MAINTENANCE FEE TO THIS PATENT WAS UNINTENTIONAL

PETITIONER(S) REQUEST THAT THE DELAYED PAYMENT OF THE MAINTENANCE FEE BE ACCEPTED AND THE PATENT REINSTATED

THIS PORTION MUST BE COMPLETED BY THE SIGNATORY OR SIGNATORIES

37 CFR 1.378(d) states: "Any petition under this section must be signed by an attorney or agent registered to practice before the Patent and Trademark Office, or by the patentee, the assignee, or other party in interest."

I certify, in accordance with 37 CFR 1.4(d)(4) that I am

◉ An attorney or agent registered to practice before the Patent and Trademark Office

○ A sole patentee

○ A joint patentee; I certify that I am authorized to sign this submission on behalf of all the other patentees.

○ A joint patentee; all of whom are signing this e-petition

○ The assignee of record of the entire interest

Patent Practitioner			
A signature of the applicant or representative is required in accordance with 37 CFR 1.33 and 10.18. Please see 37 CFR 1.4(d) for the form of the signature			
Signature	/Christopher P. Maiorana/	Date (YYYY-MM-DD)	2007-03-30
Name	Christopher P. Maiorana	Registration Number	42829

This collection of information is required by 37 CFR 1.378(c). The information is required to obtain or retain a benefit by the public which is to file (and by the USPTO to process) an application. Confidentiality is governed by 35 U.S.C. 122 and 37 CFR 1.11 and 1.14. This collection is estimated to take 1 hour to complete, including gathering, preparing, and submitting the completed application form to the USPTO. Time will vary depending upon the individual case. Any comments on the amount of time you require to complete this form and/ or suggestions for reducing this burden, should be sent to the Chief Information Officer, U.S. Patent and Trademark Office, U.S. Department of Commerce, P.O. Box 1450, Alexandria, VA 22313-1450. DO NOT SEND FEES OR COMPLETED FORMS TO THIS ADDRESS. **This form can only be used when in conjunction with EFS-Web. If this form is mailed to the USPTO, it may cause delays in reinstating the patent.**

Privacy Act Statement

The Privacy Act of 1974 (P.L. 93-579) requires that you be given certain information in connection with your submission of the attached form related to a patent application or patent. Accordingly, pursuant to the requirements of the Act, please be advised that: (1) the general authority for the collection of this information is 35 U.S.C. 2(b)(2); (2) furnishing of the information solicited is voluntary; and (3) the principal purpose for which the information is used by the U.S. Patent and Trademark Office is to process and/or examine your submission related to a patent application or patent. If you do not furnish the requested information, the U.S. Patent and Trademark Office may not be able to process and/or examine your submission, which may result in termination of proceedings or abandonment of the application or expiration of the patent.

The information provided by you in this form will be subject to the following routine uses:

1. The information on this form will be treated confidentially to the extent allowed under the Freedom of Information Act (5 U.S.C. 552) and the Privacy Act (5 U.S.C. 552a). Records from this system of records may be disclosed to the Department of Justice to determine whether the Freedom of Information Act requires disclosure of these record s.

2. A record from this system of records may be disclosed, as a routine use, in the course of presenting evidence to a court, magistrate, or administrative tribunal, including disclosures to opposing counsel in the course of settlement negotiations.

3. A record in this system of records may be disclosed, as a routine use, to a Member of Congress submitting a request involving an individual, to whom the record pertains, when the individual has requested assistance from the Member with respect to the subject matter of the record.

4. A record in this system of records may be disclosed, as a routine use, to a contractor of the Agency having need for the information in order to perform a contract. Recipients of information shall be required to comply with the requirements of the Privacy Act of 1974, as amended, pursuant to 5 U.S.C. 552a(m).

5. A record related to an International Application filed under the Patent Cooperation Treaty in this system of records may be disclosed, as a routine use, to the International Bureau of the World Intellectual Property Organization, pursuant to the Patent Cooperation Treaty.

6. A record in this system of records may be disclosed, as a routine use, to another federal agency for purposes of National Security review (35 U.S.C. 181) and for review pursuant to the Atomic Energy Act (42 U.S.C. 218(c)).

7. A record from this system of records may be disclosed, as a routine use, to the Administrator, General Services, or his/her designee, during an inspection of records conducted by GSA as part of that agency's responsibility to recommend improvements in records management practices and programs, under authority of 44 U.S.C. 2904 and 2906. Such disclosure shall be made in accordance with the GSA regulations governing inspection of records for this purpose, and any other relevant (i.e., GSA or Commerce) directive. Such disclosure shall not be used to make determinations about individuals.

8. A record from this system of records may be disclosed, as a routine use, to the public after either publication of the application pursuant to 35 U.S.C. 122(b) or issuance of a patent pursuant to 35 U.S.C. 151. Further, a record may be disclosed, subject to the limitations of 37 CFR 1.14, as a routine use, to the public if the record was filed in an application which became abandoned or in which the proceedings were terminated and which application is referenced by either a published application, an application open to public inspections or an issued patent.

9. A record from this system of records may be disclosed, as a routine use, to a Federal, State, or local law enforcement agency, if the USPTO becomes aware of a violation or potential violation of law or regulation.

UNITED STATES PATENT AND TRADEMARK OFFICE

Commissioner for Patents
United States Patent and Trademark Office
P.O. Box 1450
Alexandria, VA 22313-1450
www.uspto.gov

In re Patent No. 5362353
Issue Date: November 8,1994
Application No. 08023305
Filed: February 26,1993
Attorney Docket No. LLC-2125

:
:DECISION GRANTING PETITION
:UNDER 37 CFR 1.378(c)
:

This is a decision on the electronic petition, filed March 30,2007 ,under 37 CFR 1.378(c) to accept the unintentionally delayed payment of the 11.5 year maintenance fee for the above-identified patent.

The petition is GRANTED.

The maintenance fee is accepted, and the above-identified patent reinstated as of March 30,2007 . This decision also constitutes notice that the fee has been accepted. An electronic copy of the petition and this decision has been created as an entry in an Image File Wrapper. Nevertheless, petitioner should print and retain an independent copy

Telephone inquires related to this electronic decision should be directed to the Electronic Business Center at 1-866-217-9197.

Under the Paperwork Reduction Act of 1995, no persons are required to respond to a collection of information unless it displays valid OMB control number.

PETITION TO ACCEPT UNINTENTIONALLY DELAYED PAYMENT OF MAINTENANCE FEE IN AN EXPIRED PATENT (37 CFR 1.378(c))

Patent Number	Issue Date (YYYY-MM-DD)	Application Number	Filing Date (YYYY-MM-DD)	Docket Number (if applicable)
5483579	1996-01-09	08023791	1993-02-25	410.001 / 09202516

CAUTION: Maintenance fee (and surcharge, if any) payment must correctly identify: (1) the patent number and (2) the application number of the actual U.S. application leading to issuance of that patent to ensure the fee(s) is/are associated with the correct patent. 37 CFR 1.366(c) and (d).

SMALL ENTITY
☒ Patentee claims, or has previously claimed, small entity status. See 37 CFR 1.27.

LOSS OF ENTITLEMENT TO SMALL ENTITY STATUS
☐ Patentee is no longer entitled to small entity status. See 37 CFR 1.27(g)

NOT Small Entity			Small Entity		
	Fee	Code		Fee	Code
○	3 ½ year	(1551)	○	3 ½ year	(2551)
○	7 ½ year	(1552)	○	7 ½ year	(2552)
○	11 ½ year	(1553)	◉	11 ½ year	(2553)

SURCHARGE
The surcharge required by 37 CFR 1.20(i)(2) (Fee Code 1558) must be paid as a condition of accepting unintentionally delayed payment of the maintenance fee.

MAINTENANCE FEE (37 CFR 1.20(e)-(g))
The appropriate maintenance fee must be submitted with this petition.

STATEMENT
THE UNDERSIGNED CERTIFIES THAT THE DELAY IN PAYMENT OF THE MAINTENANCE FEE TO THIS PATENT WAS UNINTENTIONAL

PETITIONER(S) REQUEST THAT THE DELAYED PAYMENT OF THE MAINTENANCE FEE BE ACCEPTED AND THE PATENT REINSTATED

THIS PORTION MUST BE COMPLETED BY THE SIGNATORY OR SIGNATORIES

37 CFR 1.378(d) states: "Any petition under this section must be signed by an attorney or agent registered to practice before the Patent and Trademark Office, or by the patentee, the assignee, or other party in interest."

I certify, in accordance with 37 CFR 1.4(d)(4) that I am

◉ An attorney or agent registered to practice before the Patent and Trademark Office

○ A sole patentee

○ A joint patentee; I certify that I am authorized to sign this submission on behalf of all the other patentees.

○ A joint patentee; all of whom are signing this e-petition

○ The assignee of record of the entire interest

Patent Practitioner			
A signature of the applicant or representative is required in accordance with 37 CFR 1.33 and 10.18. Please see 37 CFR 1.4(d) for the form of the signature			
Signature	/Michael J. Strauss/	Date (YYYY-MM-DD)	2008-05-14
Name	Michael J. Strauss	Registration Number	32443

This collection of information is required by 37 CFR 1.378(c). The information is required to obtain or retain a benefit by the public which is to file (and by the USPTO to process) an application. Confidentiality is governed by 35 U.S.C. 122 and 37 CFR 1.11 and 1.14. This collection is estimated to take 1 hour to complete, including gathering, preparing, and submitting the completed application form to the USPTO. Time will vary depending upon the individual case. Any comments on the amount of time you require to complete this form and/ or suggestions for reducing this burden, should be sent to the Chief Information Officer, U.S. Patent and Trademark Office, U.S. Department of Commerce, P.O. Box 1450, Alexandria, VA 22313-1450. DO NOT SEND FEES OR COMPLETED FORMS TO THIS ADDRESS. **This form can only be used when in conjunction with EFS-Web. If this form is mailed to the USPTO, it may cause delays in reinstating the patent.**

Privacy Act Statement

The Privacy Act of 1974 (P.L. 93-579) requires that you be given certain information in connection with your submission of the attached form related to a patent application or patent. Accordingly, pursuant to the requirements of the Act, please be advised that: (1) the general authority for the collection of this information is 35 U.S.C. 2(b)(2); (2) furnishing of the information solicited is voluntary; and (3) the principal purpose for which the information is used by the U.S. Patent and Trademark Office is to process and/or examine your submission related to a patent application or patent. If you do not furnish the requested information, the U.S. Patent and Trademark Office may not be able to process and/or examine your submission, which may result in termination of proceedings or abandonment of the application or expiration of the patent.

The information provided by you in this form will be subject to the following routine uses:

1. The information on this form will be treated confidentially to the extent allowed under the Freedom of Information Act (5 U.S.C. 552) and the Privacy Act (5 U.S.C. 552a). Records from this system of records may be disclosed to the Department of Justice to determine whether the Freedom of Information Act requires disclosure of these record s.

2. A record from this system of records may be disclosed, as a routine use, in the course of presenting evidence to a court, magistrate, or administrative tribunal, including disclosures to opposing counsel in the course of settlement negotiations.

3. A record in this system of records may be disclosed, as a routine use, to a Member of Congress submitting a request involving an individual, to whom the record pertains, when the individual has requested assistance from the Member with respect to the subject matter of the record.

4. A record in this system of records may be disclosed, as a routine use, to a contractor of the Agency having need for the information in order to perform a contract. Recipients of information shall be required to comply with the requirements of the Privacy Act of 1974, as amended, pursuant to 5 U.S.C. 552a(m).

5. A record related to an International Application filed under the Patent Cooperation Treaty in this system of records may be disclosed, as a routine use, to the International Bureau of the World Intellectual Property Organization, pursuant to the Patent Cooperation Treaty.

6. A record in this system of records may be disclosed, as a routine use, to another federal agency for purposes of National Security review (35 U.S.C. 181) and for review pursuant to the Atomic Energy Act (42 U.S.C. 218(c)).

7. A record from this system of records may be disclosed, as a routine use, to the Administrator, General Services, or his/her designee, during an inspection of records conducted by GSA as part of that agency's responsibility to recommend improvements in records management practices and programs, under authority of 44 U.S.C. 2904 and 2906. Such disclosure shall be made in accordance with the GSA regulations governing inspection of records for this purpose, and any other relevant (i.e., GSA or Commerce) directive. Such disclosure shall not be used to make determinations about individuals.

8. A record from this system of records may be disclosed, as a routine use, to the public after either publication of the application pursuant to 35 U.S.C. 122(b) or issuance of a patent pursuant to 35 U.S.C. 151. Further, a record may be disclosed, subject to the limitations of 37 CFR 1.14, as a routine use, to the public if the record was filed in an application which became abandoned or in which the proceedings were terminated and which application is referenced by either a published application, an application open to public inspections or an issued patent.

9. A record from this system of records may be disclosed, as a routine use, to a Federal, State, or local law enforcement agency, if the USPTO becomes aware of a violation or potential violation of law or regulation.

UNITED STATES PATENT AND TRADEMARK OFFICE

Commissioner for Patents
United States Patent and Trademark Office
P.O. Box 1450
Alexandria, VA 22313-1450
www.uspto.gov

In re Patent No. 5483579
Issue Date: January 9,1996
Application No. 08023791
Filed: February 25,1993
Attorney Docket No. 410.001

:
:DECISION GRANTING PETITION
:UNDER 37 CFR 1.378(c)
:

This is a decision on the electronic petition, filed May 14,2008 ,under 37 CFR 1.378(c) to accept the unintentionally delayed payment of the 11.5 year maintenance fee for the above-identified patent.

The petition is GRANTED.

The maintenance fee is accepted, and the above-identified patent reinstated as of May 14,2008 . This decision also constitutes notice that the fee has been accepted. An electronic copy of the petition and this decision has been created as an entry in an Image File Wrapper. Nevertheless, petitioner should print and retain an independent copy

Telephone inquires related to this electronic decision should be directed to the Electronic Business Center at 1-866-217-9197.

Under the Paperwork Reduction Act of 1995, no persons are required to respond to a collection of information unless it displays valid OMB control number.

PETITION TO ACCEPT UNINTENTIONALLY DELAYED PAYMENT OF MAINTENANCE FEE IN AN EXPIRED PATENT (37 CFR 1.378(c))

Patent Number	Issue Date (YYYY-MM-DD)	Application Number	Filing Date (YYYY-MM-DD)	Docket Number (if applicable)
5327801	1994-07-12	08024181	1993-02-26	AND1547.01A

CAUTION: Maintenance fee (and surcharge, if any) payment must correctly identify: (1) the patent number and (2) the application number of the actual U.S. application leading to issuance of that patent to ensure the fee(s) is/are associated with the correct patent. 37 CFR 1.366(c) and (d).

SMALL ENTITY
☒ Patentee claims, or has previously claimed, small entity status. See 37 CFR 1.27.

LOSS OF ENTITLEMENT TO SMALL ENTITY STATUS
☐ Patentee is no longer entitled to small entity status. See 37 CFR 1.27(g)

NOT Small Entity			Small Entity		
	Fee	Code		Fee	Code
○	3 ½ year	(1551)	○	3 ½ year	(2551)
○	7 ½ year	(1552)	○	7 ½ year	(2552)
○	11 ½ year	(1553)	◉	11 ½ year	(2553)

SURCHARGE
The surcharge required by 37 CFR 1.20(i)(2) (Fee Code 1558) must be paid as a condition of accepting unintentionally delayed payment of the maintenance fee.

MAINTENANCE FEE (37 CFR 1.20(e)-(g))
The appropriate maintenance fee must be submitted with this petition.

STATEMENT
THE UNDERSIGNED CERTIFIES THAT THE DELAY IN PAYMENT OF THE MAINTENANCE FEE TO THIS PATENT WAS UNINTENTIONAL

PETITIONER(S) REQUEST THAT THE DELAYED PAYMENT OF THE MAINTENANCE FEE BE ACCEPTED AND THE PATENT REINSTATED

THIS PORTION MUST BE COMPLETED BY THE SIGNATORY OR SIGNATORIES

37 CFR 1.378(d) states: "Any petition under this section must be signed by an attorney or agent registered to practice before the Patent and Trademark Office, or by the patentee, the assignee, or other party in interest."

I certify, in accordance with 37 CFR 1.4(d)(4) that I am

○ An attorney or agent registered to practice before the Patent and Trademark Office

○ A sole patentee

○ A joint patentee; I certify that I am authorized to sign this submission on behalf of all the other patentees.

◉ A joint patentee; all of whom are signing this e-petition

○ The assignee of record of the entire interest

A Joint Patentee, all of whom are signing this petition			
A signature of the applicant or representative is required in accordance with 37 CFR 1.33 and 10.18. Please see 37 CFR 1.4(d) for the form of the signature			
Patentee 1		Remove	
Signature	/Jon R. Andreasen/	Date (YYYY-MM-DD)	2007-12-13
Name	Jon R. Andreasen		
Patentee 2		Remove	
Signature	/Anthony M. Patsfield/	Date (YYYY-MM-DD)	2007-12-13
Name	Anthony M. Patsfield		
Additional Patentees may be generated within this form by selecting the Add Button		Add	

This collection of information is required by 37 CFR 1.378(c). The information is required to obtain or retain a benefit by the public which is to file (and by the USPTO to process) an application. Confidentiality is governed by 35 U.S.C. 122 and 37 CFR 1.11 and 1.14. This collection is estimated to take 1 hour to complete, including gathering, preparing, and submitting the completed application form to the USPTO. Time will vary depending upon the individual case. Any comments on the amount of time you require to complete this form and/or suggestions for reducing this burden, should be sent to the Chief Information Officer, U.S. Patent and Trademark Office, U.S. Department of Commerce, P.O. Box 1450, Alexandria, VA 22313-1450. DO NOT SEND FEES OR COMPLETED FORMS TO THIS ADDRESS. **This form can only be used when in conjunction with EFS-Web. If this form is mailed to the USPTO, it may cause delays in reinstating the patent.**

Privacy Act Statement

The Privacy Act of 1974 (P.L. 93-579) requires that you be given certain information in connection with your submission of the attached form related to a patent application or patent. Accordingly, pursuant to the requirements of the Act, please be advised that: (1) the general authority for the collection of this information is 35 U.S.C. 2(b)(2); (2) furnishing of the information solicited is voluntary; and (3) the principal purpose for which the information is used by the U.S. Patent and Trademark Office is to process and/or examine your submission related to a patent application or patent. If you do not furnish the requested information, the U.S. Patent and Trademark Office may not be able to process and/or examine your submission, which may result in termination of proceedings or abandonment of the application or expiration of the patent.

The information provided by you in this form will be subject to the following routine uses:

1. The information on this form will be treated confidentially to the extent allowed under the Freedom of Information Act (5 U.S.C. 552) and the Privacy Act (5 U.S.C. 552a). Records from this system of records may be disclosed to the Department of Justice to determine whether the Freedom of Information Act requires disclosure of these record s.

2. A record from this system of records may be disclosed, as a routine use, in the course of presenting evidence to a court, magistrate, or administrative tribunal, including disclosures to opposing counsel in the course of settlement negotiations.

3. A record in this system of records may be disclosed, as a routine use, to a Member of Congress submitting a request involving an individual, to whom the record pertains, when the individual has requested assistance from the Member with respect to the subject matter of the record.

4. A record in this system of records may be disclosed, as a routine use, to a contractor of the Agency having need for the information in order to perform a contract. Recipients of information shall be required to comply with the requirements of the Privacy Act of 1974, as amended, pursuant to 5 U.S.C. 552a(m).

5. A record related to an International Application filed under the Patent Cooperation Treaty in this system of records may be disclosed, as a routine use, to the International Bureau of the World Intellectual Property Organization, pursuant to the Patent Cooperation Treaty.

6. A record in this system of records may be disclosed, as a routine use, to another federal agency for purposes of National Security review (35 U.S.C. 181) and for review pursuant to the Atomic Energy Act (42 U.S.C. 218(c)).

7. A record from this system of records may be disclosed, as a routine use, to the Administrator, General Services, or his/her designee, during an inspection of records conducted by GSA as part of that agency's responsibility to recommend improvements in records management practices and programs, under authority of 44 U.S.C. 2904 and 2906. Such disclosure shall be made in accordance with the GSA regulations governing inspection of records for this purpose, and any other relevant (i.e., GSA or Commerce) directive. Such disclosure shall not be used to make determinations about individuals.

8. A record from this system of records may be disclosed, as a routine use, to the public after either publication of the application pursuant to 35 U.S.C. 122(b) or issuance of a patent pursuant to 35 U.S.C. 151. Further, a record may be disclosed, subject to the limitations of 37 CFR 1.14, as a routine use, to the public if the record was filed in an application which became abandoned or in which the proceedings were terminated and which application is referenced by either a published application, an application open to public inspections or an issued patent.

9. A record from this system of records may be disclosed, as a routine use, to a Federal, State, or local law enforcement agency, if the USPTO becomes aware of a violation or potential violation of law or regulation.

UNITED STATES PATENT AND TRADEMARK OFFICE

Commissioner for Patents
United States Patent and Trademark Office
P.O. Box 1450
Alexandria, VA 22313-1450
www.uspto.gov

In re Patent No. 5327801
Issue Date: July 12,1994
Application No. 08024181
Filed: February 26,1993
Attorney Docket No. 1547.01A

:

:DECISION GRANTING PETITION
:UNDER 37 CFR 1.378(c)

:

This is a decision on the electronic petition, filed December 13,2007 ,under 37 CFR 1.378(c) to accept the unintentionally delayed payment of the 11.5 year maintenance fee for the above-identified patent.

The petition is GRANTED.

The maintenance fee is accepted, and the above-identified patent reinstated as of December 13,2007. This decision also constitutes notice that the fee has been accepted. An electronic copy of the petition and this decision has been created as an entry in an Image File Wrapper. Nevertheless, petitioner should print and retain an independent copy

Telephone inquires related to this electronic decision should be directed to the Electronic Business Center at 1-866-217-9197.

UNITED STATES DEPARTMENT OF COMMERCE
Patent and Trademark Office
ASSISTANT SECRETARY AND COMMISSIONER
OF PATENTS AND TRADEMARKS
Washington, D.C. 20231

#5

Sughrue, Mion, Macpeak & Seas
2100 Pennsylvania Avenue, N.W.
Washington, D.C. 20037

AUG - 9 1993

In re Application of :
Jeong Jae-Chang, et al :
Serial No. 08/0234,305 : DECISION ON PETITION
Filed: March 1, 1993 :
Attorney Docket No. Q31672 :

This is a decision on the petition filed April 28, 1993, requesting that the above-identified application be accorded a filing date of March 1, 1993.

On March 1, 1993, the application was deposited without an executed declaration.

On April 13, 1993, Application Division mailed a Notice stating that a drawing of Figure 3 described in the specification was required in compliance with 35 USC 111 and that the filing date would be the date of receipt of the drawing. An oath or declaration in compliance with 37 CFR 1.63 was also required.

In response, on April 28 1993, the present petition and a $130.00 check were filed. Petitioners argue that all the figures for this application were present on filing and that the reference in the specification to a drawing of Figure 3 rather than Figures 3A-3H was the result of an inadvertent error. In support of the petition, a preliminary amendment to the specification conforming the drawing figure mentioned in the specification with those labeled in the drawings, as filed, was submitted. Copies of the three (3) sheets of drawings, filed March 1, 1993, were also submitted. Petitioners request that the application be accorded a filing date of March 1, 1993 and the petition fee be refunded.

MPEP 608.01(f) states, in part, that an application is considered incomplete if it omits drawings which are described in the specification.

Upon review of the record, it appears that applicants erroneously referred to Figure 3 in the brief description of the drawings when, in fact, the drawings contained no Figure 3. The drawings actually being described were Figures 3A-3H. The evidence is convincing that the reference to

Figure 3 in the specification was an inadvertent errors which has been corrected by the preliminary amendment.

Since it has been determined that all the drawing figures for this application were present on filing, even though the specification contained an inadvertent error, on petition, the application may be accorded the requested filing date. The petition fee will not be refunded since the present petition and petition fee were necessary in view of applicants' filing error.

The petition is granted.

The preliminary amendment to the specification filed April 28, 1993, will be entered in due course.

Receipt is acknowledged of a priority document filed March 1, 1993; and an assignment, an executed declaration and surcharge filed April 28, 1993.

The application is being returned to Application Division for further processing with a filing date of March 1, 1993, using the application papers filed March 1, 1993 and the declaration filed April 28, 1993, and an indication on the file wrapper that three (3) sheets of drawings were present on filing.

Fred A. Silverberg
Special Program Examiner
Office of the A/C for Patents

jaj

UNITED STATES PATENT AND TRADEMARK OFFICE

Commissioner for Patents
United States Patent and Trademark Office
P.O. Box 1450
Alexandria, VA 22313-1450
www.uspto.gov

Paper No. 33

SUGHRUE, MION, ZINN, MACPEAK & SEAS
2100 PENNSYLVANIA AVE, NW
WASHINGTON, DC 20037-3202

COPY MAILED

AUG 0 5 2004

OFFICE OF PETITIONS

In re Patent No. 6,263,026	:	
Issue Date: July 17, 2001	:	ON PETITION
Application No. 08/024,305	:	
Filed: March 1, 1993	:	
Attorney Docket No. Q31672	:	

This is a decision on the petition under 37 CFR 1.182, filed July 12, 2004, requesting issuance of duplicate Letters Patent for the above-identified application.

The petition is **granted.**

The Office of Patent Publication is directed to issue duplicate Letters Patent.

A copy of this decision is being forwarded to Office of Patent Publication for issuance of a duplicate Letters Patent. The patent file is being forwarded to the Files Repository.

Any questions concerning this matter may be directed to the Office of Patent Publication at (703) 308-6789.

Christina Tartera Donnell

Christina Tartera Donnell
Senior Petitions Attorney
Office of Petitions
(703) 306-5589

cc: Krystal Paige, Crystal Park 3-920 (FAX 703-746-4642)

Under the Paperwork Reduction Act of 1995, no persons are required to respond to a collection of information unless it displays valid OMB control number.

PETITION TO ACCEPT UNINTENTIONALLY DELAYED PAYMENT OF MAINTENANCE FEE IN AN EXPIRED PATENT (37 CFR 1.378(c))

Patent Number	Issue Date (YYYY-MM-DD)	Application Number	Filing Date (YYYY-MM-DD)	Docket Number (if applicable)
5,394,667	1995-03-07	08/024,360	1993-03-01	56120

CAUTION: Maintenance fee (and surcharge, if any) payment must correctly identify: (1) the patent number and (2) the application number of the actual U.S. application leading to issuance of that patent to ensure the fee(s) is/are associated with the correct patent. 37 CFR 1.366(c) and (d).

SMALL ENTITY
☒ Patentee claims, or has previously claimed, small entity status. See 37 CFR 1.27.

LOSS OF ENTITLEMENT TO SMALL ENTITY STATUS
☐ Patentee is no longer entitled to small entity status. See 37 CFR 1.27(g)

NOT Small Entity			Small Entity		
	Fee	Code		Fee	Code
○	3 ½ year	(1551)	○	3 ½ year	(2551)
○	7 ½ year	(1552)	○	7 ½ year	(2552)
○	11 ½ year	(1553)	◉	11 ½ year	(2553)

SURCHARGE
The surcharge required by 37 CFR 1.20(i)(2) (Fee Code 1558) must be paid as a condition of accepting unintentionally delayed payment of the maintenance fee.

MAINTENANCE FEE (37 CFR 1.20(e)-(g))
The appropriate maintenance fee must be submitted with this petition.

STATEMENT
THE UNDERSIGNED CERTIFIES THAT THE DELAY IN PAYMENT OF THE MAINTENANCE FEE TO THIS PATENT WAS UNINTENTIONAL

PETITIONER(S) REQUEST THAT THE DELAYED PAYMENT OF THE MAINTENANCE FEE BE ACCEPTED AND THE PATENT REINSTATED

THIS PORTION MUST BE COMPLETED BY THE SIGNATORY OR SIGNATORIES

37 CFR 1.378(d) states: "Any petition under this section must be signed by an attorney or agent registered to practice before the Patent and Trademark Office, or by the patentee, the assignee, or other party in interest."

I certify, in accordance with 37 CFR 1.4(d)(4) that I am

◉ An attorney or agent registered to practice before the Patent and Trademark Office

○ A sole patentee

○ A joint patentee; I certify that I am authorized to sign this submission on behalf of all the other patentees.

○ A joint patentee; all of whom are signing this e-petition

○ The assignee of record of the entire interest

Patent Practitioner			
A signature of the applicant or representative is required in accordance with 37 CFR 1.33 and 10.18. Please see 37 CFR 1.4(d) for the form of the signature			
Signature	/Dennis Lambert/	Date (YYYY-MM-DD)	2007-04-09
Name	Dennis H. Lambert	Registration Number	25017

This collection of information is required by 37 CFR 1.378(c). The information is required to obtain or retain a benefit by the public which is to file (and by the USPTO to process) an application. Confidentiality is governed by 35 U.S.C. 122 and 37 CFR 1.11 and 1.14. This collection is estimated to take 1 hour to complete, including gathering, preparing, and submitting the completed application form to the USPTO. Time will vary depending upon the individual case. Any comments on the amount of time you require to complete this form and/ or suggestions for reducing this burden, should be sent to the Chief Information Officer, U.S. Patent and Trademark Office, U.S. Department of Commerce, P.O. Box 1450, Alexandria, VA 22313-1450. DO NOT SEND FEES OR COMPLETED FORMS TO THIS ADDRESS. **This form can only be used when in conjunction with EFS-Web. If this form is mailed to the USPTO, it may cause delays in reinstating the patent.**

Privacy Act Statement

The Privacy Act of 1974 (P.L. 93-579) requires that you be given certain information in connection with your submission of the attached form related to a patent application or patent. Accordingly, pursuant to the requirements of the Act, please be advised that: (1) the general authority for the collection of this information is 35 U.S.C. 2(b)(2); (2) furnishing of the information solicited is voluntary; and (3) the principal purpose for which the information is used by the U.S. Patent and Trademark Office is to process and/or examine your submission related to a patent application or patent. If you do not furnish the requested information, the U.S. Patent and Trademark Office may not be able to process and/or examine your submission, which may result in termination of proceedings or abandonment of the application or expiration of the patent.

The information provided by you in this form will be subject to the following routine uses:

1. The information on this form will be treated confidentially to the extent allowed under the Freedom of Information Act (5 U.S.C. 552) and the Privacy Act (5 U.S.C. 552a). Records from this system of records may be disclosed to the Department of Justice to determine whether the Freedom of Information Act requires disclosure of these record s.

2. A record from this system of records may be disclosed, as a routine use, in the course of presenting evidence to a court, magistrate, or administrative tribunal, including disclosures to opposing counsel in the course of settlement negotiations.

3. A record in this system of records may be disclosed, as a routine use, to a Member of Congress submitting a request involving an individual, to whom the record pertains, when the individual has requested assistance from the Member with respect to the subject matter of the record.

4. A record in this system of records may be disclosed, as a routine use, to a contractor of the Agency having need for the information in order to perform a contract. Recipients of information shall be required to comply with the requirements of the Privacy Act of 1974, as amended, pursuant to 5 U.S.C. 552a(m).

5. A record related to an International Application filed under the Patent Cooperation Treaty in this system of records may be disclosed, as a routine use, to the International Bureau of the World Intellectual Property Organization, pursuant to the Patent Cooperation Treaty.

6. A record in this system of records may be disclosed, as a routine use, to another federal agency for purposes of National Security review (35 U.S.C. 181) and for review pursuant to the Atomic Energy Act (42 U.S.C. 218(c)).

7. A record from this system of records may be disclosed, as a routine use, to the Administrator, General Services, or his/her designee, during an inspection of records conducted by GSA as part of that agency's responsibility to recommend improvements in records management practices and programs, under authority of 44 U.S.C. 2904 and 2906. Such disclosure shall be made in accordance with the GSA regulations governing inspection of records for this purpose, and any other relevant (i.e., GSA or Commerce) directive. Such disclosure shall not be used to make determinations about individuals.

8. A record from this system of records may be disclosed, as a routine use, to the public after either publication of the application pursuant to 35 U.S.C. 122(b) or issuance of a patent pursuant to 35 U.S.C. 151. Further, a record may be disclosed, subject to the limitations of 37 CFR 1.14, as a routine use, to the public if the record was filed in an application which became abandoned or in which the proceedings were terminated and which application is referenced by either a published application, an application open to public inspections or an issued patent.

9. A record from this system of records may be disclosed, as a routine use, to a Federal, State, or local law enforcement agency, if the USPTO becomes aware of a violation or potential violation of law or regulation.

UNITED STATES PATENT AND TRADEMARK OFFICE

Commissioner for Patents
United States Patent and Trademark Office
P.O. Box 1450
Alexandria, VA 22313-1450
www.uspto.gov

In re Patent No. 5394667
Issue Date: March 7,1995
Application No. 08024360
Filed: March 1,1993
Attorney Docket No.

:

:DECISION GRANTING PETITION
:UNDER 37 CFR 1.378(c)

:

This is a decision on the electronic petition, filed April 9,2007 ,under 37 CFR 1.378(c) to accept the unintentionally delayed payment of the 11.5 year maintenance fee for the above-identified patent.

The petition is GRANTED.

The maintenance fee is accepted, and the above-identified patent reinstated as of April 9,2007 . This decision also constitutes notice that the fee has been accepted. An electronic copy of the petition and this decision has been created as an entry in an Image File Wrapper. Nevertheless, petitioner should print and retain an independent copy

Telephone inquires related to this electronic decision should be directed to the Electronic Business Center at 1-866-217-9197.

UNITED STATES PATENT AND TRADEMARK OFFICE

Commissioner for Patents
United States Patent and Trademark Office
P.O. Box 1450
Alexandria, VA 22313-1450
www.uspto.gov

PROSKAUER ROSE LLP
ONE INTERNATIONAL PLACE 14TH FL
BOSTON MA 02110

COPY MAILED

MAR 2 0 2006

OFFICE OF PETITIONS

In re Application of
Couch et al. :
Patent No. 5,380,976 :
Application No. 08/024,416 : NOTICE
Filed: March 1, 1993 :
Issue Date: January 10, 1995 :
Title: PROCESS FOR HIGH QUALITY :
PLASMA ARC AND LASER CUTTING :
OF STAINLESS STEEL AN ALUMINUM

This is a notice regarding your request filed on February 27, 2006, that small entity status be entered for the above identified patent pursuant to 37 CFR 1.27.

The change of status to a small entity has been entered and made of record.

Telephone inquiries concerning this matter should be directed to the undersigned at (571) 272-3215.

Charlema R. Grant

Charlema R. Grant
Petitions Attorney
Office of Petitions

UNITED STATES PATENT AND TRADEMARK OFFICE

Commissioner for Patents
United States Patent and Trademark Office
P.O. Box 1450
Alexandria, VA 22313-1450
www.uspto.gov

COPY MAILED
APR 27 2006
OFFICE OF PETITIONS

PROSKAUER ROSE LLP
ONE INTERNATIONAL PLACE 14TH FL
BOSTON MA 02110

In re Application of	
Couch et al.	:
Patent No. 5,380,976	: CORRECTED
Application No. 08/024,416	: NOTICE
Filed: March 1, 1993	:
Issue Date: January 10, 1995	:
Title: PROCESS FOR HIGH QUALITY	:
PLASMA ARC AND LASER CUTTING	:
OF STAINLESS STEEL AN ALUMINUM	

This is a notice regarding your request filed on February 27, 2006, that small entity status be removed for the above identified patent pursuant to 37 CFR 1.27.

The change in status to a large entity has been entered and made of record.

Telephone inquiries concerning this matter should be directed to the undersigned at (571) 272-3215.

Charlema R. Grant
Petitions Attorney
Office of Petitions

UNITED STATES PATENT AND TRADEMARK OFFICE

Commissioner for Patents
United States Patent and Trademark Office
P.O. Box 1450
Alexandria, VA 22313-1450

GREENBERG TRAURIG LLP
Met Life Building
200 Park Avenue
New York, New York 10166

COPY MAILED

JUL 06 2007

OFFICE OF PETITIONS

In re Application of	:	
David Platt	:	
Application No. 08/024,487	:	DECISION ON PETITION
Filed: March 1, 1993	:	
Attorney Docket No. 89918.021000	:	

This is a decision on the petition under the unintentional provisions of 37 CFR 1.137(b), filed August 15, 2006, to revive the above-identified application and petition under 37 CFR 1.183 to waive the terminal disclaimer requirement of 37 CFR 1.137(b).

The petition under 37 CFR 1.137(b) is **DISMISSED** as moot.

The petition under 37 CFR 1.183 is **DISMISSED** as moot.

This instant petition to revive the above identified-application was filed prior to actual abandonment of the application as a timely Notice of Appeal and Appeal fee were submitted on July 5, 2006, July 4, 2006 being a Holiday. Accordingly, the application could not have become abandoned until September 6, 2006. The instant petition includes an amendment in accordance with 37 CFR 41.33.

In view of the amendment filed August 15, 2006, this application was never abandoned. The response will be considered to be in accordance with 37 CFR 41.33, the submission of an amendment after the date of the filing of an appeal, placing the case in condition for allowance. Since the response filed August 15, 2006 prima facie placed the application in condition for allowance no abandonment occurred.

The $3050 fees collected and charged to Deposit Account 50-1561will be credited to Deposit Account 50-1561 in accordance with petitioner's instructions.

Telephone inquiries concerning this decision should be directed to Thurman K. Page at (571) 272-0602.

This application file is being forwarded to Technology Center AU 1623 for appropriate action on the concurrently filed amendment.

David Bucci
Petitions Examiner
Office of Petitions

SPE: D. Sample

SPE RESPONSE FOR CERTIFICATE OF CORRECTION

Paper No.: _____

DATE : 6/23/07

TO SPE OF : ART UNIT 1723

SUBJECT : Request for Certificate of Correction for Appl. No.: 08/025,547 Patent No.: 5324422

Please respond to this request for a certificate of correction within 7 days.

Please review the requested changes/corrections as shown in the **COCIN** document(s) in the IFW application image. No new matter should be introduced, nor should the scope or meaning of the claims be changed.

Please complete the response (see below) and forward the completed response to scanning using document code **COCX**.

Lamonte M. Newsome
Certificates of Correction Branch
703-308-9390 ext. 112

Thank You For Your Assistance

The request for issuing the above-identified correction(s) is hereby:

Note your decision on the appropriate box.

- [X] **Approved** — All changes apply.
- [ ] **Approved in Part** — Specify below which changes do not apply.
- [ ] **Denied** — State the reasons for denial below.

Comments: _____

DAVID SAMPLE — SPE

1723 — Art Unit

Under the Paperwork Reduction Act of 1995, no persons are required to respond to a collection of information unless it displays valid OMB control number.

PETITION TO ACCEPT UNINTENTIONALLY DELAYED PAYMENT OF MAINTENANCE FEE IN AN EXPIRED PATENT (37 CFR 1.378(c))

Patent Number	Issue Date (YYYY-MM-DD)	Application Number	Filing Date (YYYY-MM-DD)	Docket Number (if applicable)
5247709	1993-09-28	08025672	1993-03-03	5885

CAUTION: Maintenance fee (and surcharge, if any) payment must correctly identify: (1) the patent number and (2) the application number of the actual U.S. application leading to issuance of that patent to ensure the fee(s) is/are associated with the correct patent. 37 CFR 1.366(c) and (d).

SMALL ENTITY
☒ Patentee claims, or has previously claimed, small entity status. See 37 CFR 1.27.

LOSS OF ENTITLEMENT TO SMALL ENTITY STATUS
☐ Patentee is no longer entitled to small entity status. See 37 CFR 1.27(g)

NOT Small Entity			Small Entity		
	Fee	Code		Fee	Code
○	3 ½ year	(1551)	○	3 ½ year	(2551)
○	7 ½ year	(1552)	○	7 ½ year	(2552)
○	11 ½ year	(1553)	◉	11 ½ year	(2553)

SURCHARGE
The surcharge required by 37 CFR 1.20(i)(2) (Fee Code 1558) must be paid as a condition of accepting unintentionally delayed payment of the maintenance fee.

MAINTENANCE FEE (37 CFR 1.20(e)-(g))
The appropriate maintenance fee must be submitted with this petition.

STATEMENT
THE UNDERSIGNED CERTIFIES THAT THE DELAY IN PAYMENT OF THE MAINTENANCE FEE TO THIS PATENT WAS UNINTENTIONAL

PETITIONER(S) REQUEST THAT THE DELAYED PAYMENT OF THE MAINTENANCE FEE BE ACCEPTED AND THE PATENT REINSTATED

THIS PORTION MUST BE COMPLETED BY THE SIGNATORY OR SIGNATORIES

37 CFR 1.378(d) states: "Any petition under this section must be signed by an attorney or agent registered to practice before the Patent and Trademark Office, or by the patentee, the assignee, or other party in interest."

I certify, in accordance with 37 CFR 1.4(d)(4) that I am

◉ An attorney or agent registered to practice before the Patent and Trademark Office

○ A sole patentee

○ A joint patentee; I certify that I am authorized to sign this submission on behalf of all the other patentees.

○ A joint patentee; all of whom are signing this e-petition

○ The assignee of record of the entire interest

Patent Practitioner			
A signature of the applicant or representative is required in accordance with 37 CFR 1.33 and 10.18. Please see 37 CFR 1.4(d) for the form of the signature			
Signature	/Charles Fallow/	Date (YYYY-MM-DD)	2006-10-24
Name	Charles W. Fallow	Registration Number	28946

This collection of information is required by 37 CFR 1.378(c). The information is required to obtain or retain a benefit by the public which is to file (and by the USPTO to process) an application. Confidentiality is governed by 35 U.S.C. 122 and 37 CFR 1.11 and 1.14. This collection is estimated to take 1 hour to complete, including gathering, preparing, and submitting the completed application form to the USPTO. Time will vary depending upon the individual case. Any comments on the amount of time you require to complete this form and/ or suggestions for reducing this burden, should be sent to the Chief Information Officer, U.S. Patent and Trademark Office, U.S. Department of Commerce, P.O. Box 1450, Alexandria, VA 22313-1450. DO NOT SEND FEES OR COMPLETED FORMS TO THIS ADDRESS. **This form can only be used when in conjunction with EFS-Web. If this form is mailed to the USPTO, it may cause delays in reinstating the patent.**

Privacy Act Statement

The Privacy Act of 1974 (P.L. 93-579) requires that you be given certain information in connection with your submission of the attached form related to a patent application or patent. Accordingly, pursuant to the requirements of the Act, please be advised that: (1) the general authority for the collection of this information is 35 U.S.C. 2(b)(2); (2) furnishing of the information solicited is voluntary; and (3) the principal purpose for which the information is used by the U.S. Patent and Trademark Office is to process and/or examine your submission related to a patent application or patent. If you do not furnish the requested information, the U.S. Patent and Trademark Office may not be able to process and/or examine your submission, which may result in termination of proceedings or abandonment of the application or expiration of the patent.

The information provided by you in this form will be subject to the following routine uses:

1. The information on this form will be treated confidentially to the extent allowed under the Freedom of Information Act (5 U.S.C. 552) and the Privacy Act (5 U.S.C. 552a). Records from this system of records may be disclosed to the Department of Justice to determine whether the Freedom of Information Act requires disclosure of these record s.

2. A record from this system of records may be disclosed, as a routine use, in the course of presenting evidence to a court, magistrate, or administrative tribunal, including disclosures to opposing counsel in the course of settlement negotiations.

3. A record in this system of records may be disclosed, as a routine use, to a Member of Congress submitting a request involving an individual, to whom the record pertains, when the individual has requested assistance from the Member with respect to the subject matter of the record.

4. A record in this system of records may be disclosed, as a routine use, to a contractor of the Agency having need for the information in order to perform a contract. Recipients of information shall be required to comply with the requirements of the Privacy Act of 1974, as amended, pursuant to 5 U.S.C. 552a(m).

5. A record related to an International Application filed under the Patent Cooperation Treaty in this system of records may be disclosed, as a routine use, to the International Bureau of the World Intellectual Property Organization, pursuant to the Patent Cooperation Treaty.

6. A record in this system of records may be disclosed, as a routine use, to another federal agency for purposes of National Security review (35 U.S.C. 181) and for review pursuant to the Atomic Energy Act (42 U.S.C. 218(c)).

7. A record from this system of records may be disclosed, as a routine use, to the Administrator, General Services, or his/her designee, during an inspection of records conducted by GSA as part of that agency's responsibility to recommend improvements in records management practices and programs, under authority of 44 U.S.C. 2904 and 2906. Such disclosure shall be made in accordance with the GSA regulations governing inspection of records for this purpose, and any other relevant (i.e., GSA or Commerce) directive. Such disclosure shall not be used to make determinations about individuals.

8. A record from this system of records may be disclosed, as a routine use, to the public after either publication of the application pursuant to 35 U.S.C. 122(b) or issuance of a patent pursuant to 35 U.S.C. 151. Further, a record may be disclosed, subject to the limitations of 37 CFR 1.14, as a routine use, to the public if the record was filed in an application which became abandoned or in which the proceedings were terminated and which application is referenced by either a published application, an application open to public inspections or an issued patent.

9. A record from this system of records may be disclosed, as a routine use, to a Federal, State, or local law enforcement agency, if the USPTO becomes aware of a violation or potential violation of law or regulation.

PTO/SB/66 (03-09)
Approved for use through 03/31/2012. OMB 0651-0016
U.S. Patent and Trademark Office: U.S. DEPARTMENT OF COMMERCE
Under the Paperwork Reduction Act of 1995, no persons are required to respond to a collection of information unless it displays valid OMB control number.

PETITION TO ACCEPT UNINTENTIONALLY DELAYED PAYMENT OF MAINTENANCE FEE IN AN EXPIRED PATENT (37 CFR 1.378(c))

Patent Number	Issue Date (YYYY-MM-DD)	Application Number	Filing Date (YYYY-MM-DD)	Docket Number (if applicable)
6175066	2001-01-16	08027729	1993-01-14	MCA1A

CAUTION: Maintenance fee (and surcharge, if any) payment must correctly identify: (1) the patent number and (2) the application number of the actual U.S. application leading to issuance of that patent to ensure the fee(s) is/are associated with the correct patent. 37 CFR 1.366(c) and (d).

SMALL ENTITY
☒ Patentee claims, or has previously claimed, small entity status. See 37 CFR 1.27.

LOSS OF ENTITLEMENT TO SMALL ENTITY STATUS
☐ Patentee is no longer entitled to small entity status. See 37 CFR 1.27(g)

NOT Small Entity			Small Entity		
	Fee	Code		Fee	Code
○	3 ½ year	(1551)	○	3 ½ year	(2551)
○	7 ½ year	(1552)	◉	7 ½ year	(2552)
○	11 ½ year	(1553)	○	11 ½ year	(2553)

SURCHARGE
The surcharge required by 37 CFR 1.20(i)(2) (Fee Code 1558) must be paid as a condition of accepting unintentionally delayed payment of the maintenance fee.

MAINTENANCE FEE (37 CFR 1.20(e)-(g))
The appropriate maintenance fee must be submitted with this petition.

STATEMENT
THE UNDERSIGNED CERTIFIES THAT THE DELAY IN PAYMENT OF THE MAINTENANCE FEE TO THIS PATENT WAS UNINTENTIONAL

PETITIONER(S) REQUEST THAT THE DELAYED PAYMENT OF THE MAINTENANCE FEE BE ACCEPTED AND THE PATENT REINSTATED

THIS PORTION MUST BE COMPLETED BY THE SIGNATORY OR SIGNATORIES

37 CFR 1.378(d) states: "Any petition under this section must be signed by an attorney or agent registered to practice before the Patent and Trademark Office, or by the patentee, the assignee, or other party in interest."

I certify, in accordance with 37 CFR 1.4(d)(4) that I am

○ An attorney or agent registered to practice before the Patent and Trademark Office

◉ A sole patentee

○ A joint patentee; I certify that I am authorized to sign this submission on behalf of all the other patentees.

○ A joint patentee; all of whom are signing this e-petition

○ The assignee of record of the entire interest

Sole Patentee			
A signature of the applicant or representative is required in accordance with 37 CFR 1.33 and 10.18. Please see 37 CFR 1.4(d) for the form of the signature.			
Signature	//Geoffrey Lee McCabe//	Date (YYYY-MM-DD)	2009-10-06
Name	Geoffrey Lee McCabe		

This collection of information is required by 37 CFR 1.378(c). The information is required to obtain or retain a benefit by the public which is to file (and by the USPTO to process) an application. Confidentiality is governed by 35 U.S.C. 122 and 37 CFR 1.11 and 1.14. This collection is estimated to take 1 hour to complete, including gathering, preparing, and submitting the completed application form to the USPTO. Time will vary depending upon the individual case. Any comments on the amount of time you require to complete this form and/or suggestions for reducing this burden, should be sent to the Chief Information Officer, U.S. Patent and Trademark Office, U.S. Department of Commerce, P.O. Box 1450, Alexandria, VA 22313-1450. DO NOT SEND FEES OR COMPLETED FORMS TO THIS ADDRESS. **This form can only be used when in conjunction with EFS-Web. If this form is mailed to the USPTO, it may cause delays in reinstating the patent.**

Privacy Act Statement

The Privacy Act of 1974 (P.L. 93-579) requires that you be given certain information in connection with your submission of the attached form related to a patent application or patent. Accordingly, pursuant to the requirements of the Act, please be advised that: (1) the general authority for the collection of this information is 35 U.S.C. 2(b)(2); (2) furnishing of the information solicited is voluntary; and (3) the principal purpose for which the information is used by the U.S. Patent and Trademark Office is to process and/or examine your submission related to a patent application or patent. If you do not furnish the requested information, the U.S. Patent and Trademark Office may not be able to process and/or examine your submission, which may result in termination of proceedings or abandonment of the application or expiration of the patent.

The information provided by you in this form will be subject to the following routine uses:

1. The information on this form will be treated confidentially to the extent allowed under the Freedom of Information Act (5 U.S.C. 552) and the Privacy Act (5 U.S.C. 552a). Records from this system of records may be disclosed to the Department of Justice to determine whether the Freedom of Information Act requires disclosure of these records.

2. A record from this system of records may be disclosed, as a routine use, in the course of presenting evidence to a court, magistrate, or administrative tribunal, including disclosures to opposing counsel in the course of settlement negotiations.

3. A record in this system of records may be disclosed, as a routine use, to a Member of Congress submitting a request involving an individual, to whom the record pertains, when the individual has requested assistance from the Member with respect to the subject matter of the record.

4. A record in this system of records may be disclosed, as a routine use, to a contractor of the Agency having need for the information in order to perform a contract. Recipients of information shall be required to comply with the requirements of the Privacy Act of 1974, as amended, pursuant to 5 U.S.C. 552a(m).

5. A record related to an International Application filed under the Patent Cooperation Treaty in this system of records may be disclosed, as a routine use, to the International Bureau of the World Intellectual Property Organization, pursuant to the Patent Cooperation Treaty.

6. A record in this system of records may be disclosed, as a routine use, to another federal agency for purposes of National Security review (35 U.S.C. 181) and for review pursuant to the Atomic Energy Act (42 U.S.C. 218(c)).

7. A record from this system of records may be disclosed, as a routine use, to the Administrator, General Services, or his/her designee, during an inspection of records conducted by GSA as part of that agency's responsibility to recommend improvements in records management practices and programs, under authority of 44 U.S.C. 2904 and 2906. Such disclosure shall be made in accordance with the GSA regulations governing inspection of records for this purpose, and any other relevant (i.e., GSA or Commerce) directive. Such disclosure shall not be used to make determinations about individuals.

8. A record from this system of records may be disclosed, as a routine use, to the public after either publication of the application pursuant to 35 U.S.C. 122(b) or issuance of a patent pursuant to 35 U.S.C. 151. Further, a record may be disclosed, subject to the limitations of 37 CFR 1.14, as a routine use, to the public if the record was filed in an application which became abandoned or in which the proceedings were terminated and which application is referenced by either a published application, an application open to public inspections or an issued patent.

9. A record from this system of records may be disclosed, as a routine use, to a Federal, State, or local law enforcement agency, if the USPTO becomes aware of a violation or potential violation of law or regulation.

UNITED STATES PATENT AND TRADEMARK OFFICE

Commissioner for Patents
United States Patent and Trademark Office
P.O. Box 1450
Alexandria, VA 22313-1450
www.uspto.gov

In re Patent No. 6175066
Issue Date: January 16,2001
Application No. 08027729
Filed: January 14,1993
Attorney Docket No. MCA1A

:
:DECISION GRANTING PETITION
:UNDER 37 CFR 1.378(c)
:

This is a decision on the electronic petition, filed October 6,2009 ,under 37 CFR 1.378(c) to accept the unintentionally delayed payment of the 7.5 year maintenance fee for the above-identified patent.

The petition is **GRANTED**.

The maintenance fee is accepted, and the above-identified patent reinstated as of October 6,2009 .
This decision also constitutes notice that the fee has been accepted. An electronic copy of the petition and this decision has been created as an entry in the Image File Wrapper. Nevertheless, petitioner should print and retain an independent copy.

Telephone inquiries related to this electronic decision should be directed to the Electronic Business Center at 1-866-217-9197.

UNITED STATES PATENT AND TRADEMARK OFFICE

Commissioner for Patents
United States Patent and Trademark Office
P.O. Box 1450
Alexandria, VA 22313-1450
www.uspto.gov

DUANE MORRIS, LLP
101 WEST BROADWAY
SUITE 900
SAN DIEGO CA 92101-8285

COPY MAILED

JAN 26 2007

OFFICE OF PETITIONS

In re Patent No. 5,454,562 :
Issue Date: 10/03/1995 : DECISION ON PETITION
Application No. 08/030,332 :
Filed: 05/20/1993 :
Attorney Docket No. E3614-00004 :

This is a decision is in response to the "PETITION UNDER 37 CFR § 1.183 REQUESTING EXTENSION OF TIME FOR FILING PETITION FOR RECONSIDERATION PURSUANT TO 37 CFR § 1.378(e)."

On May 5, 2006, petitioner filed a petition under 37 CFR 1.378(b) to accept the delayed payment of the maintenance fee for the above-identified patent. On December 6, 2006, the Office mailed a decision dismissing the petition under 37 CFR 1.378(b). The decision set a TWO-MONTH non-extendable period from the mail date of the decision to file a petition for reconsideration under 37 CFR 1.378(e) accompanied by the $400.00 fee.

In the present petition, petitioner seeks a waiver of the two (2) month time period for filing a petition for reconsideration pursuant to 37 CFR 1.378(e). Specifically, petitioner requests a three (3) month extension of time for filing a petition for reconsideration (i.e. until May 6, 2007).

Pursuant to 37 CFR 1.183, in an extraordinary situation, when justice requires, any requirement of the regulations, which is not a requirement of the statutes, may be suspended or waived by the Director or the Director's designee, *sua sponte*, or on petition of the interested party.

In support of the request to waive the two-month time period, petitioner has made the following argument:

> Through their undersigned representative, Petitioner has diligently attempted to obtain the requested information and statements necessary for responding to the Decision on Petition. Petitioner is diligently attempting to procure the items noted in the Decision on Petition but because of extraordinary circumstances including translation of foreign

language documents, an initial lack of cooperation with the Luderschmidt Law Firm and language and geographical barriers associated with contacting the Luderschmidt Law firm and coordinating communications with Patentee Roland Sommer (resident in Taiwan), Petitioner will require and respectfully requests additional time for obtaining the information requested in the Decision on Petition and filing the same in a Petition for Reconsideration under 37 CFR § 1.378(e).

In view of the specific circumstances of this case, it is agreed that justice would be served by waiving the two (2) month period for filing a petition for reconsideration pursuant to 37 CFR 1.378(e). Accordingly, the petition under 37 CFR 1.183 is **granted**. The period to file a petition for reconsideration is **extended to May 6, 2007**. If petitioner should require any further extensions of this new time period, petitioner must submit a petition under 37 CFR 1.183 and a $400.00 fee.

Telephone inquiries concerning this matter may be directed to the undersigned at (571) 272-3211.

Christina Tartera Donnell

Christina Tartera Donnell
Senior Petitions Attorney
Office of Petitions

UNITED STATES PATENT AND TRADEMARK OFFICE

Commissioner for Patents
United States Patent and Trademark Office
P.O. Box 1450
Alexandria, VA 22313-1450
www.uspto.gov

DUANE MORRIS, LLP
101 WEST BROADWAY
SUITE 900
SAN DIEGO CA 92101-8285

COPY MAILED

MAY 03 2007

OFFICE OF PETITIONS

In re Patent No. 5,454,562	:	
Issue Date: 10/03/1995	:	DECISION ON PETITION
Application No. 08/030,332	:	
Filed: 05/20/1993	:	
Attorney Docket No. E3614-00004	:	

This is a decision is in response to the "PETITION UNDER 37 CFR § 1.183 REQUESTING EXTENSION OF TIME FOR FILING PETITION FOR RECONSIDERATION PURSUANT TO 37 CFR § 1.378(e)," filed May 1, 2007.

On May 5, 2006, petitioner filed a petition under 37 CFR 1.378(b) to accept the delayed payment of the maintenance fee for the above-identified patent. On December 6, 2006, the Office mailed a decision dismissing the petition under 37 CFR 1.378(b). The decision set a TWO-MONTH non-extendable period from the mail date of the decision to file a petition for reconsideration under 37 CFR 1.378(e) accompanied by the $400.00 fee.

On January 23, 2007, petitioner filed a "PETITION UNDER 37 CFR § 1.183 REQUESTING EXTENSION OF TIME FOR FILING PETITION FOR RECONSIDERATION PURSUANT TO 37 CFR § 1.378(e)." On January 26, 2007, the Office mailed a decision granting the petition and extending the period for filing a petition for reconsideration until May 6, 2007.

In the present petition, petitioner again seeks a waiver of the two (2) month time period for filing a petition for reconsideration pursuant to 37 CFR 1.378(e). Specifically, petitioner requests a four (4) month extension of time for filing a petition for reconsideration (i.e. until June 6, 2007).

Pursuant to 37 CFR 1.183, in an extraordinary situation, when justice requires, any requirement of the regulations, which is not a requirement of the statutes, may be suspended or waived by the Director or the Director's designee, *sua sponte*, or on petition of the interested party.

In support of the request to waive the two-month time period, petitioner provided the following explanation:

> Petitioner has dutifully attempted to contact the Luderschmidt Law Firm of Wiesbaden, Germany on several occasions and by several means, finally beginning a productive dialogue with the Luderschmidt firm after they appointed U.S. counsel. Although progress is now being made, there have been delays in communications regarding the identification of appropriate parties to make statements, generation of the statements, and, now, finalization of the Statements in support of the Petition for Reconsideration as such communications go through Luderschmidt's appointed U.S. Counsel, the Luderschmidt firm, a former Luderschmidt employee tentatively identified for providing a Statement and other Luderschmidt advisers such as their insurance company.

Petition dated 05/01/07, pp. 2-3.

In view of the specific circumstances of this case, it is agreed that justice would be served by waiving the two (2) month period for filing a petition for reconsideration pursuant to 37 CFR 1.378(e). Accordingly, the petition under 37 CFR 1.183 is **granted**. The period to file a petition for reconsideration is **extended to June 6, 2007**. If petitioner should require any further extensions of this new time period, petitioner must submit a petition under 37 CFR 1.183 and a $400.00 fee.

Telephone inquiries concerning this matter may be directed to the undersigned at (571) 272-3211.

Christina Tartera Donnell

Christina Tartera Donnell
Senior Petitions Attorney
Office of Petitions

UNITED STATES PATENT AND TRADEMARK OFFICE

Commissioner for Patents
United States Patent and Trademark Office
P.O. Box 1450
Alexandria, VA 22313-1450
www.uspto.gov

In re Patent No. 6869790
Issue Date: March 22,2005
Application No. 08032171
Filed: March 12,1993
Attorney Docket No. 02481.0399-0

:DECISION GRANTING PETITION
:UNDER 37 CFR 1.378(c)

This is a decision on the electronic petition, filed August 5,2009 ,under 37 CFR 1.378(c) to accept the unintentionally delayed payment of the 3.5 year maintenance fee for the above-identified patent.

The petition is **GRANTED**.

The maintenance fee is accepted, and the above-identified patent reinstated as of August 5,2009 . This decision also constitutes notice that the fee has been accepted. An electronic copy of the petition and this decision has been created as an entry in the Image File Wrapper. Nevertheless, petitioner should print and retain an independent copy.

Telephone inquiries related to this electronic decision should be directed to the Electronic Business Center at 1-866-217-9197.

PTO/SB/66 (03-09)
Approved for use through 03/31/2012. OMB 0651-0016
U.S. Patent and Trademark Office: U.S. DEPARTMENT OF COMMERCE
Under the Paperwork Reduction Act of 1995, no persons are required to respond to a collection of information unless it displays valid OMB control number.

PETITION TO ACCEPT UNINTENTIONALLY DELAYED PAYMENT OF MAINTENANCE FEE IN AN EXPIRED PATENT (37 CFR 1.378(c))

Patent Number	Issue Date (YYYY-MM-DD)	Application Number	Filing Date (YYYY-MM-DD)	Docket Number (if applicable)
6869790	2005-03-22	08032171	1993-03-12	7102.220-US

CAUTION: Maintenance fee (and surcharge, if any) payment must correctly identify: (1) the patent number and (2) the application number of the actual U.S. application leading to issuance of that patent to ensure the fee(s) is/are associated with the correct patent. 37 CFR 1.366(c) and (d).

SMALL ENTITY

☐ Patentee claims, or has previously claimed, small entity status. See 37 CFR 1.27.

LOSS OF ENTITLEMENT TO SMALL ENTITY STATUS

☐ Patentee is no longer entitled to small entity status. See 37 CFR 1.27(g)

NOT Small Entity			Small Entity		
	Fee	Code		Fee	Code
◉	3 ½ year	(1551)	○	3 ½ year	(2551)
○	7 ½ year	(1552)	○	7 ½ year	(2552)
○	11 ½ year	(1553)	○	11 ½ year	(2553)

SURCHARGE

The surcharge required by 37 CFR 1.20(i)(2) (Fee Code 1558) must be paid as a condition of accepting unintentionally delayed payment of the maintenance fee.

MAINTENANCE FEE (37 CFR 1.20(e)-(g))

The appropriate maintenance fee must be submitted with this petition.

STATEMENT

THE UNDERSIGNED CERTIFIES THAT THE DELAY IN PAYMENT OF THE MAINTENANCE FEE TO THIS PATENT WAS UNINTENTIONAL

PETITIONER(S) REQUEST THAT THE DELAYED PAYMENT OF THE MAINTENANCE FEE BE ACCEPTED AND THE PATENT REINSTATED

THIS PORTION MUST BE COMPLETED BY THE SIGNATORY OR SIGNATORIES

37 CFR 1.378(d) states: "Any petition under this section must be signed by an attorney or agent registered to practice before the Patent and Trademark Office, or by the patentee, the assignee, or other party in interest."

I certify, in accordance with 37 CFR 1.4(d)(4) that I am

◉ An attorney or agent registered to practice before the Patent and Trademark Office

○ A sole patentee

○ A joint patentee; I certify that I am authorized to sign this submission on behalf of all the other patentees.

○ A joint patentee; all of whom are signing this e-petition

○ The assignee of record of the entire interest

Patent Practitioner			
A signature of the applicant or representative is required in accordance with 37 CFR 1.33 and 10.18. Please see 37 CFR 1.4(d) for the form of the signature			
Signature	/Len S. Smith, Reg. No. 43,139/	Date (YYYY-MM-DD)	2009-08-04
Name	Len S. Smith	Registration Number	43139

This collection of information is required by 37 CFR 1.378(c). The information is required to obtain or retain a benefit by the public which is to file (and by the USPTO to process) an application. Confidentiality is governed by 35 U.S.C. 122 and 37 CFR 1.11 and 1.14. This collection is estimated to take 1 hour to complete, including gathering, preparing, and submitting the completed application form to the USPTO. Time will vary depending upon the individual case. Any comments on the amount of time you require to complete this form and/ or suggestions for reducing this burden, should be sent to the Chief Information Officer, U.S. Patent and Trademark Office, U.S. Department of Commerce, P.O. Box 1450, Alexandria, VA 22313-1450. DO NOT SEND FEES OR COMPLETED FORMS TO THIS ADDRESS. **This form can only be used when in conjunction with EFS-Web. If this form is mailed to the USPTO, it may cause delays in reinstating the patent.**

Privacy Act Statement

The Privacy Act of 1974 (P.L. 93-579) requires that you be given certain information in connection with your submission of the attached form related to a patent application or patent. Accordingly, pursuant to the requirements of the Act, please be advised that: (1) the general authority for the collection of this information is 35 U.S.C. 2(b)(2); (2) furnishing of the information solicited is voluntary; and (3) the principal purpose for which the information is used by the U.S. Patent and Trademark Office is to process and/or examine your submission related to a patent application or patent. If you do not furnish the requested information, the U.S. Patent and Trademark Office may not be able to process and/or examine your submission, which may result in termination of proceedings or abandonment of the application or expiration of the patent.

The information provided by you in this form will be subject to the following routine uses:

1. The information on this form will be treated confidentially to the extent allowed under the Freedom of Information Act (5 U.S.C. 552) and the Privacy Act (5 U.S.C. 552a). Records from this system of records may be disclosed to the Department of Justice to determine whether the Freedom of Information Act requires disclosure of these records.

2. A record from this system of records may be disclosed, as a routine use, in the course of presenting evidence to a court, magistrate, or administrative tribunal, including disclosures to opposing counsel in the course of settlement negotiations.

3. A record in this system of records may be disclosed, as a routine use, to a Member of Congress submitting a request involving an individual, to whom the record pertains, when the individual has requested assistance from the Member with respect to the subject matter of the record.

4. A record in this system of records may be disclosed, as a routine use, to a contractor of the Agency having need for the information in order to perform a contract. Recipients of information shall be required to comply with the requirements of the Privacy Act of 1974, as amended, pursuant to 5 U.S.C. 552a(m).

5. A record related to an International Application filed under the Patent Cooperation Treaty in this system of records may be disclosed, as a routine use, to the International Bureau of the World Intellectual Property Organization, pursuant to the Patent Cooperation Treaty.

6. A record in this system of records may be disclosed, as a routine use, to another federal agency for purposes of National Security review (35 U.S.C. 181) and for review pursuant to the Atomic Energy Act (42 U.S.C. 218(c)).

7. A record from this system of records may be disclosed, as a routine use, to the Administrator, General Services, or his/her designee, during an inspection of records conducted by GSA as part of that agency's responsibility to recommend improvements in records management practices and programs, under authority of 44 U.S.C. 2904 and 2906. Such disclosure shall be made in accordance with the GSA regulations governing inspection of records for this purpose, and any other relevant (i.e., GSA or Commerce) directive. Such disclosure shall not be used to make determinations about individuals.

8. A record from this system of records may be disclosed, as a routine use, to the public after either publication of the application pursuant to 35 U.S.C. 122(b) or issuance of a patent pursuant to 35 U.S.C. 151. Further, a record may be disclosed, subject to the limitations of 37 CFR 1.14, as a routine use, to the public if the record was filed in an application which became abandoned or in which the proceedings were terminated and which application is referenced by either a published application, an application open to public inspections or an issued patent.

9. A record from this system of records may be disclosed, as a routine use, to a Federal, State, or local law enforcement agency, if the USPTO becomes aware of a violation or potential violation of law or regulation.

PTO/SB/66 (03-09)
Approved for use through 03/31/2012. OMB 0651-0016
U.S. Patent and Trademark Office: U.S. DEPARTMENT OF COMMERCE
Under the Paperwork Reduction Act of 1995, no persons are required to respond to a collection of information unless it displays valid OMB control number.

PETITION TO ACCEPT UNINTENTIONALLY DELAYED PAYMENT OF MAINTENANCE FEE IN AN EXPIRED PATENT (37 CFR 1.378(c))

Patent Number	Issue Date (YYYY-MM-DD)	Application Number	Filing Date (YYYY-MM-DD)	Docket Number (if applicable)
5570714	1996-11-05	08033135	1993-03-18	432.01

CAUTION: Maintenance fee (and surcharge, if any) payment must correctly identify: (1) the patent number and (2) the application number of the actual U.S. application leading to issuance of that patent to ensure the fee(s) is/are associated with the correct patent. 37 CFR 1.366(c) and (d).

SMALL ENTITY
☒ Patentee claims, or has previously claimed, small entity status. See 37 CFR 1.27.

LOSS OF ENTITLEMENT TO SMALL ENTITY STATUS
☐ Patentee is no longer entitled to small entity status. See 37 CFR 1.27(g)

NOT Small Entity			Small Entity		
	Fee	Code		Fee	Code
○	3 ½ year	(1551)	○	3 ½ year	(2551)
○	7 ½ year	(1552)	○	7 ½ year	(2552)
○	11 ½ year	(1553)	◉	11 ½ year	(2553)

SURCHARGE
The surcharge required by 37 CFR 1.20(i)(2) (Fee Code 1558) must be paid as a condition of accepting unintentionally delayed payment of the maintenance fee.

MAINTENANCE FEE (37 CFR 1.20(e)-(g))
The appropriate maintenance fee must be submitted with this petition.

STATEMENT
THE UNDERSIGNED CERTIFIES THAT THE DELAY IN PAYMENT OF THE MAINTENANCE FEE TO THIS PATENT WAS UNINTENTIONAL

PETITIONER(S) REQUEST THAT THE DELAYED PAYMENT OF THE MAINTENANCE FEE BE ACCEPTED AND THE PATENT REINSTATED

THIS PORTION MUST BE COMPLETED BY THE SIGNATORY OR SIGNATORIES

37 CFR 1.378(d) states: "Any petition under this section must be signed by an attorney or agent registered to practice before the Patent and Trademark Office, or by the patentee, the assignee, or other party in interest."

I certify, in accordance with 37 CFR 1.4(d)(4) that I am

○ An attorney or agent registered to practice before the Patent and Trademark Office

○ A sole patentee

○ A joint patentee; I certify that I am authorized to sign this submission on behalf of all the other patentees.

○ A joint patentee; all of whom are signing this e-petition

◉ The assignee of record of the entire interest

The Assignee of record of the entire interest			
Under 37 CFR 3.71 an assignee becomes of record by filing a statement in compliance with 37 CFR 3.73(b). Signature requirements are set forth in 37 CFR 1.4(d), and the undersigned certifies that he / she is empowered to act on behalf of the assignee of the entire interest			
Signature	/cliffordltager/	Date (YYYY-MM-DD)	2009-07-07
Name	Clifford L. Tager		
Enter Reel and Frame Number		Remove	
Reel Number	008144	Frame Number	0961
Click ADD for additional Reel Number and Frame Number		Add	

This collection of information is required by 37 CFR 1.378(c). The information is required to obtain or retain a benefit by the public which is to file (and by the USPTO to process) an application. Confidentiality is governed by 35 U.S.C. 122 and 37 CFR 1.11 and 1.14. This collection is estimated to take 1 hour to complete, including gathering, preparing, and submitting the completed application form to the USPTO. Time will vary depending upon the individual case. Any comments on the amount of time you require to complete this form and/ or suggestions for reducing this burden, should be sent to the Chief Information Officer, U.S. Patent and Trademark Office, U.S. Department of Commerce, P.O. Box 1450, Alexandria, VA 22313-1450. DO NOT SEND FEES OR COMPLETED FORMS TO THIS ADDRESS. **This form can only be used when in conjunction with EFS-Web. If this form is mailed to the USPTO, it may cause delays in reinstating the patent.**

Privacy Act Statement

The Privacy Act of 1974 (P.L. 93-579) requires that you be given certain information in connection with your submission of the attached form related to a patent application or patent. Accordingly, pursuant to the requirements of the Act, please be advised that: (1) the general authority for the collection of this information is 35 U.S.C. 2(b)(2); (2) furnishing of the information solicited is voluntary; and (3) the principal purpose for which the information is used by the U.S. Patent and Trademark Office is to process and/or examine your submission related to a patent application or patent. If you do not furnish the requested information, the U.S. Patent and Trademark Office may not be able to process and/or examine your submission, which may result in termination of proceedings or abandonment of the application or expiration of the patent.

The information provided by you in this form will be subject to the following routine uses:

1. The information on this form will be treated confidentially to the extent allowed under the Freedom of Information Act (5 U.S.C. 552) and the Privacy Act (5 U.S.C. 552a). Records from this system of records may be disclosed to the Department of Justice to determine whether the Freedom of Information Act requires disclosure of these records.

2. A record from this system of records may be disclosed, as a routine use, in the course of presenting evidence to a court, magistrate, or administrative tribunal, including disclosures to opposing counsel in the course of settlement negotiations.

3. A record in this system of records may be disclosed, as a routine use, to a Member of Congress submitting a request involving an individual, to whom the record pertains, when the individual has requested assistance from the Member with respect to the subject matter of the record.

4. A record in this system of records may be disclosed, as a routine use, to a contractor of the Agency having need for the information in order to perform a contract. Recipients of information shall be required to comply with the requirements of the Privacy Act of 1974, as amended, pursuant to 5 U.S.C. 552a(m).

5. A record related to an International Application filed under the Patent Cooperation Treaty in this system of records may be disclosed, as a routine use, to the International Bureau of the World Intellectual Property Organization, pursuant to the Patent Cooperation Treaty.

6. A record in this system of records may be disclosed, as a routine use, to another federal agency for purposes of National Security review (35 U.S.C. 181) and for review pursuant to the Atomic Energy Act (42 U.S.C. 218(c)).

7. A record from this system of records may be disclosed, as a routine use, to the Administrator, General Services, or his/her designee, during an inspection of records conducted by GSA as part of that agency's responsibility to recommend improvements in records management practices and programs, under authority of 44 U.S.C. 2904 and 2906. Such disclosure shall be made in accordance with the GSA regulations governing inspection of records for this purpose, and any other relevant (i.e., GSA or Commerce) directive. Such disclosure shall not be used to make determinations about individuals.

8. A record from this system of records may be disclosed, as a routine use, to the public after either publication of the application pursuant to 35 U.S.C. 122(b) or issuance of a patent pursuant to 35 U.S.C. 151. Further, a record may be disclosed, subject to the limitations of 37 CFR 1.14, as a routine use, to the public if the record was filed in an application which became abandoned or in which the proceedings were terminated and which application is referenced by either a published application, an application open to public inspections or an issued patent.

9. A record from this system of records may be disclosed, as a routine use, to a Federal, State, or local law enforcement agency, if the USPTO becomes aware of a violation or potential violation of law or regulation.

UNITED STATES PATENT AND TRADEMARK OFFICE

Commissioner for Patents
United States Patent and Trademark Office
P.O. Box 1450
Alexandria, VA 22313-1450
www.uspto.gov

In re Patent No. 5570714
Issue Date: November 5,1996
Application No. 08033135
Filed: March 18,1993
Attorney Docket No. 432.01

:
:DECISION GRANTING PETITION
:UNDER 37 CFR 1.378(c)
:

This is a decision on the electronic petition, filed July 7,2009 ,under 37 CFR 1.378(c) to accept the unintentionally delayed payment of the 11.5 year maintenance fee for the above-identified patent.

The petition is **GRANTED**.

The maintenance fee is accepted, and the above-identified patent reinstated as of July 7,2009 . This decision also constitutes notice that the fee has been accepted. An electronic copy of the petition and this decision has been created as an entry in the Image File Wrapper. Nevertheless, petitioner should print and retain an independent copy.

Telephone inquiries related to this electronic decision should be directed to the Electronic Business Center at 1-866-217-9197.

Under the Paperwork Reduction Act of 1995, no persons are required to respond to a collection of information unless it displays valid OMB control number.

PETITION TO ACCEPT UNINTENTIONALLY DELAYED PAYMENT OF MAINTENANCE FEE IN AN EXPIRED PATENT (37 CFR 1.378(c))

Patent Number	Issue Date (YYYY-MM-DD)	Application Number	Filing Date (YYYY-MM-DD)	Docket Number (if applicable)
5441218	1995-08-15	08034100	1993-03-22	2852

CAUTION: Maintenance fee (and surcharge, if any) payment must correctly identify: (1) the patent number and (2) the application number of the actual U.S. application leading to issuance of that patent to ensure the fee(s) is/are associated with the correct patent. 37 CFR 1.366(c) and (d).

SMALL ENTITY
☐ Patentee claims, or has previously claimed, small entity status. See 37 CFR 1.27.

LOSS OF ENTITLEMENT TO SMALL ENTITY STATUS
☐ Patentee is no longer entitled to small entity status. See 37 CFR 1.27(g)

NOT Small Entity			Small Entity		
	Fee	Code		Fee	Code
○	3 ½ year	(1551)	○	3 ½ year	(2551)
○	7 ½ year	(1552)	○	7 ½ year	(2552)
◉	11 ½ year	(1553)	○	11 ½ year	(2553)

SURCHARGE
The surcharge required by 37 CFR 1.20(i)(2) (Fee Code 1558) must be paid as a condition of accepting unintentionally delayed payment of the maintenance fee.

MAINTENANCE FEE (37 CFR 1.20(e)-(g))
The appropriate maintenance fee must be submitted with this petition.

STATEMENT
THE UNDERSIGNED CERTIFIES THAT THE DELAY IN PAYMENT OF THE MAINTENANCE FEE TO THIS PATENT WAS UNINTENTIONAL

PETITIONER(S) REQUEST THAT THE DELAYED PAYMENT OF THE MAINTENANCE FEE BE ACCEPTED AND THE PATENT REINSTATED

THIS PORTION MUST BE COMPLETED BY THE SIGNATORY OR SIGNATORIES

37 CFR 1.378(d) states: "Any petition under this section must be signed by an attorney or agent registered to practice before the Patent and Trademark Office, or by the patentee, the assignee, or other party in interest."

I certify, in accordance with 37 CFR 1.4(d)(4) that I am

◉ An attorney or agent registered to practice before the Patent and Trademark Office

○ A sole patentee

○ A joint patentee; I certify that I am authorized to sign this submission on behalf of all the other patentees.

○ A joint patentee; all of whom are signing this e-petition

○ The assignee of record of the entire interest

Patent Practitioner			
A signature of the applicant or representative is required in accordance with 37 CFR 1.33 and 10.18. Please see 37 CFR 1.4(d) for the form of the signature			
Signature	/Walter F. Fasse #36132/	Date (YYYY-MM-DD)	2007-10-19
Name	Walter F. Fasse	Registration Number	36132

This collection of information is required by 37 CFR 1.378(c). The information is required to obtain or retain a benefit by the public which is to file (and by the USPTO to process) an application. Confidentiality is governed by 35 U.S.C. 122 and 37 CFR 1.11 and 1.14. This collection is estimated to take 1 hour to complete, including gathering, preparing, and submitting the completed application form to the USPTO. Time will vary depending upon the individual case. Any comments on the amount of time you require to complete this form and/ or suggestions for reducing this burden, should be sent to the Chief Information Officer, U.S. Patent and Trademark Office, U.S. Department of Commerce, P.O. Box 1450, Alexandria, VA 22313-1450. DO NOT SEND FEES OR COMPLETED FORMS TO THIS ADDRESS. **This form can only be used when in conjunction with EFS-Web. If this form is mailed to the USPTO, it may cause delays in reinstating the patent.**

Privacy Act Statement

The Privacy Act of 1974 (P.L. 93-579) requires that you be given certain information in connection with your submission of the attached form related to a patent application or patent. Accordingly, pursuant to the requirements of the Act, please be advised that: (1) the general authority for the collection of this information is 35 U.S.C. 2(b)(2); (2) furnishing of the information solicited is voluntary; and (3) the principal purpose for which the information is used by the U.S. Patent and Trademark Office is to process and/or examine your submission related to a patent application or patent. If you do not furnish the requested information, the U.S. Patent and Trademark Office may not be able to process and/or examine your submission, which may result in termination of proceedings or abandonment of the application or expiration of the patent.

The information provided by you in this form will be subject to the following routine uses:

1. The information on this form will be treated confidentially to the extent allowed under the Freedom of Information Act (5 U.S.C. 552) and the Privacy Act (5 U.S.C. 552a). Records from this system of records may be disclosed to the Department of Justice to determine whether the Freedom of Information Act requires disclosure of these record s.

2. A record from this system of records may be disclosed, as a routine use, in the course of presenting evidence to a court, magistrate, or administrative tribunal, including disclosures to opposing counsel in the course of settlement negotiations.

3. A record in this system of records may be disclosed, as a routine use, to a Member of Congress submitting a request involving an individual, to whom the record pertains, when the individual has requested assistance from the Member with respect to the subject matter of the record.

4. A record in this system of records may be disclosed, as a routine use, to a contractor of the Agency having need for the information in order to perform a contract. Recipients of information shall be required to comply with the requirements of the Privacy Act of 1974, as amended, pursuant to 5 U.S.C. 552a(m).

5. A record related to an International Application filed under the Patent Cooperation Treaty in this system of records may be disclosed, as a routine use, to the International Bureau of the World Intellectual Property Organization, pursuant to the Patent Cooperation Treaty.

6. A record in this system of records may be disclosed, as a routine use, to another federal agency for purposes of National Security review (35 U.S.C. 181) and for review pursuant to the Atomic Energy Act (42 U.S.C. 218(c)).

7. A record from this system of records may be disclosed, as a routine use, to the Administrator, General Services, or his/her designee, during an inspection of records conducted by GSA as part of that agency's responsibility to recommend improvements in records management practices and programs, under authority of 44 U.S.C. 2904 and 2906. Such disclosure shall be made in accordance with the GSA regulations governing inspection of records for this purpose, and any other relevant (i.e., GSA or Commerce) directive. Such disclosure shall not be used to make determinations about individuals.

8. A record from this system of records may be disclosed, as a routine use, to the public after either publication of the application pursuant to 35 U.S.C. 122(b) or issuance of a patent pursuant to 35 U.S.C. 151. Further, a record may be disclosed, subject to the limitations of 37 CFR 1.14, as a routine use, to the public if the record was filed in an application which became abandoned or in which the proceedings were terminated and which application is referenced by either a published application, an application open to public inspections or an issued patent.

9. A record from this system of records may be disclosed, as a routine use, to a Federal, State, or local law enforcement agency, if the USPTO becomes aware of a violation or potential violation of law or regulation.

UNITED STATES PATENT AND TRADEMARK OFFICE

Commissioner for Patents
United States Patent and Trademark Office
P.O. Box 1450
Alexandria, VA 22313-1450
www.uspto.gov

In re Patent No. 5441218
Issue Date: August 15,1995
Application No. 08034100
Filed: March 22,1993
Attorney Docket No. 2852

:
:DECISION GRANTING PETITION
:UNDER 37 CFR 1.378(c)
:

This is a decision on the electronic petition, filed October 19,2007 ,under 37 CFR 1.378(c) to accept the unintentionally delayed payment of the 11.5 year maintenance fee for the above-identified patent.

The petition is GRANTED.

The maintenance fee is accepted, and the above-identified patent reinstated as of October 19,2007 . This decision also constitutes notice that the fee has been accepted. An electronic copy of the petition and this decision has been created as an entry in an Image File Wrapper. Nevertheless, petitioner should print and retain an independent copy

Telephone inquires related to this electronic decision should be directed to the Electronic Business Center at 1-866-217-9197.

UNITED STATES PATENT AND TRADEMARK OFFICE

Commissioner for Patents
United States Patent and Trademark Office
P.O. Box 1450
Alexandria, VA 22313-1450
www.uspto.gov

In re Patent No. 5530492
Issue Date: June 25,1996
Application No. 08034717
Filed: March 22,1993
Attorney Docket No. 3147-PA

:DECISION GRANTING PETITION
:UNDER 37 CFR 1.378(c)

This is a decision on the electronic petition, filed June 23,2010 ,under 37 CFR 1.378(c) to accept the unintentionally delayed payment of the 11.5 year maintenance fee for the above-identified patent.

The petition is **GRANTED**.

The maintenance fee is accepted, and the above-identified patent reinstated as of June 23,2010 .
This decision also constitutes notice that the fee has been accepted. An electronic copy of the petition and this decision has been created as an entry in the Image File Wrapper. Nevertheless, petitioner should print and retain an independent copy.

Telephone inquiries related to this electronic decision should be directed to the Electronic Business Center at 1-866-217-9197.

PTO/SB/66 (03-09)
Approved for use through 03/31/2012. OMB 0651-0016
U.S. Patent and Trademark Office: U.S. DEPARTMENT OF COMMERCE
Under the Paperwork Reduction Act of 1995, no persons are required to respond to a collection of information unless it displays valid OMB control number.

PETITION TO ACCEPT UNINTENTIONALLY DELAYED PAYMENT OF MAINTENANCE FEE IN AN EXPIRED PATENT (37 CFR 1.378(c))

Patent Number	Issue Date (YYYY-MM-DD)	Application Number	Filing Date (YYYY-MM-DD)	Docket Number (if applicable)
5530492	1996-06-25	08034717	1993-03-22	20061.002.NPUS00

CAUTION: Maintenance fee (and surcharge, if any) payment must correctly identify: (1) the patent number and (2) the application number of the actual U.S. application leading to issuance of that patent to ensure the fee(s) is/are associated with the correct patent. 37 CFR 1.366(c) and (d).

SMALL ENTITY
☒ Patentee claims, or has previously claimed, small entity status. See 37 CFR 1.27.

LOSS OF ENTITLEMENT TO SMALL ENTITY STATUS
☐ Patentee is no longer entitled to small entity status. See 37 CFR 1.27(g)

NOT Small Entity			Small Entity		
	Fee	Code		Fee	Code
○	3 ½ year	(1551)	○	3 ½ year	(2551)
○	7 ½ year	(1552)	○	7 ½ year	(2552)
○	11 ½ year	(1553)	◉	11 ½ year	(2553)

SURCHARGE
The surcharge required by 37 CFR 1.20(i)(2) (Fee Code 1558) must be paid as a condition of accepting unintentionally delayed payment of the maintenance fee.

MAINTENANCE FEE (37 CFR 1.20(e)-(g))
The appropriate maintenance fee must be submitted with this petition.

STATEMENT
THE UNDERSIGNED CERTIFIES THAT THE DELAY IN PAYMENT OF THE MAINTENANCE FEE TO THIS PATENT WAS UNINTENTIONAL

PETITIONER(S) REQUEST THAT THE DELAYED PAYMENT OF THE MAINTENANCE FEE BE ACCEPTED AND THE PATENT REINSTATED

THIS PORTION MUST BE COMPLETED BY THE SIGNATORY OR SIGNATORIES

37 CFR 1.378(d) states: "Any petition under this section must be signed by an attorney or agent registered to practice before the Patent and Trademark Office, or by the patentee, the assignee, or other party in interest."

I certify, in accordance with 37 CFR 1.4(d)(4) that I am

○ An attorney or agent registered to practice before the Patent and Trademark Office

○ A sole patentee

○ A joint patentee; I certify that I am authorized to sign this submission on behalf of all the other patentees.

○ A joint patentee; all of whom are signing this e-petition

◉ The assignee of record of the entire interest

The Assignee of record of the entire interest			
Under 37 CFR 3.71 an assignee becomes of record by filing a statement in compliance with 37 CFR 3.73(b). Signature requirements are set forth in 37 CFR 1.4(d), and the undersigned certifies that he / she is empowered to act on behalf of the assignee of the entire interest			
Signature	/Samuel Ron/	Date (YYYY-MM-DD)	2010-06-22
Name	Samuel Ron		
Enter Reel and Frame Number		Remove	
Reel Number	006489	Frame Number	0938
Enter Reel and Frame Number		Remove	
Reel Number	007102	Frame Number	0442
Click ADD for additional Reel Number and Frame Number		Add	

This collection of information is required by 37 CFR 1.378(c). The information is required to obtain or retain a benefit by the public which is to file (and by the USPTO to process) an application. Confidentiality is governed by 35 U.S.C. 122 and 37 CFR 1.11 and 1.14. This collection is estimated to take 1 hour to complete, including gathering, preparing, and submitting the completed application form to the USPTO. Time will vary depending upon the individual case. Any comments on the amount of time you require to complete this form and/ or suggestions for reducing this burden, should be sent to the Chief Information Officer, U.S. Patent and Trademark Office, U.S. Department of Commerce, P.O. Box 1450, Alexandria, VA 22313-1450. DO NOT SEND FEES OR COMPLETED FORMS TO THIS ADDRESS. **This form can only be used when in conjunction with EFS-Web. If this form is mailed to the USPTO, it may cause delays in reinstating the patent.**

Privacy Act Statement

The Privacy Act of 1974 (P.L. 93-579) requires that you be given certain information in connection with your submission of the attached form related to a patent application or patent. Accordingly, pursuant to the requirements of the Act, please be advised that: (1) the general authority for the collection of this information is 35 U.S.C. 2(b)(2); (2) furnishing of the information solicited is voluntary; and (3) the principal purpose for which the information is used by the U.S. Patent and Trademark Office is to process and/or examine your submission related to a patent application or patent. If you do not furnish the requested information, the U.S. Patent and Trademark Office may not be able to process and/or examine your submission, which may result in termination of proceedings or abandonment of the application or expiration of the patent.

The information provided by you in this form will be subject to the following routine uses:

1. The information on this form will be treated confidentially to the extent allowed under the Freedom of Information Act (5 U.S.C. 552) and the Privacy Act (5 U.S.C. 552a). Records from this system of records may be disclosed to the Department of Justice to determine whether the Freedom of Information Act requires disclosure of these records.

2. A record from this system of records may be disclosed, as a routine use, in the course of presenting evidence to a court, magistrate, or administrative tribunal, including disclosures to opposing counsel in the course of settlement negotiations.

3. A record in this system of records may be disclosed, as a routine use, to a Member of Congress submitting a request involving an individual, to whom the record pertains, when the individual has requested assistance from the Member with respect to the subject matter of the record.

4. A record in this system of records may be disclosed, as a routine use, to a contractor of the Agency having need for the information in order to perform a contract. Recipients of information shall be required to comply with the requirements of the Privacy Act of 1974, as amended, pursuant to 5 U.S.C. 552a(m).

5. A record related to an International Application filed under the Patent Cooperation Treaty in this system of records may be disclosed, as a routine use, to the International Bureau of the World Intellectual Property Organization, pursuant to the Patent Cooperation Treaty.

6. A record in this system of records may be disclosed, as a routine use, to another federal agency for purposes of National Security review (35 U.S.C. 181) and for review pursuant to the Atomic Energy Act (42 U.S.C. 218(c)).

7. A record from this system of records may be disclosed, as a routine use, to the Administrator, General Services, or his/her designee, during an inspection of records conducted by GSA as part of that agency's responsibility to recommend improvements in records management practices and programs, under authority of 44 U.S.C. 2904 and 2906. Such disclosure shall be made in accordance with the GSA regulations governing inspection of records for this purpose, and any other relevant (i.e., GSA or Commerce) directive. Such disclosure shall not be used to make determinations about individuals.

8. A record from this system of records may be disclosed, as a routine use, to the public after either publication of the application pursuant to 35 U.S.C. 122(b) or issuance of a patent pursuant to 35 U.S.C. 151. Further, a record may be disclosed, subject to the limitations of 37 CFR 1.14, as a routine use, to the public if the record was filed in an application which became abandoned or in which the proceedings were terminated and which application is referenced by either a published application, an application open to public inspections or an issued patent.

9. A record from this system of records may be disclosed, as a routine use, to a Federal, State, or local law enforcement agency, if the USPTO becomes aware of a violation or potential violation of law or regulation.

UNITED STATES PATENT AND TRADEMARK OFFICE

Commissioner for Patents
United States Patent and Trademark Office
P.O. Box 1450
Alexandria, VA 22313-1450
www.uspto.gov

Paper No. 16

EVERETT D. ROBINSON
PARSONS BEHLE & LATIMER
333 SOUTH 520 WEST, SUITE 220
LINDON, UTAH 84042

COPY MAILED

JUN 1 4 2004

OFFICE OF PETITIONS

In re Patent No. 5,308,196 :
Issue Date: May 3, 1994 :
Application No. 08/035,722 : ON PETITION
Filed: March 23, 1993 :
Attorney Docket No. 1112 P :

This is a decision on the petition, received May 27, 2004,[1] under 37 CFR 1.378(c) to accept the unintentionally delayed payment of a maintenance fee for the above-identified patent.

The petition is GRANTED.

The patent issued May 3, 1994. The grace period for paying the second maintenance fee expired at midnight on May 3, 2004. Since the maintenance and reinstatement surcharge fees were submitted within twenty-four months after the six-month grace period provided in 37 CFR 1.362(e), it is appropriate herein to accept the unintentionally delayed payment of the second maintenance fee.

Accordingly, the maintenance fee in this case is hereby accepted.

Telephone inquiries concerning this matter may be directed to the undersigned at (703) 305-8680.

Frances Hicks
Frances Hicks
Petitions Examiner
Office of Petitions

---

[1] The petition asserted to have been previously filed cannot be located. A review of the copy of the post card submitted with the petition of May 27, 2004 fails to show a stamped receipt date of a petition in the USPTO. However, Office finance records disclose receipt of a $1,640 reinstatement surcharge fee and a $2,020 eight year maintenance fee on October 8, 2002. In view thereof, the two year period within which to file the petition is considered to have been tolled by the submission of the maintenance and surcharge fees on October 8, 2002.

Under the Paperwork Reduction Act of 1995, no persons are required to respond to a collection of information unless it displays valid OMB control number.

PETITION TO ACCEPT UNINTENTIONALLY DELAYED PAYMENT OF MAINTENANCE FEE IN AN EXPIRED PATENT (37 CFR 1.378(c))

Patent Number	Issue Date (YYYY-MM-DD)	Application Number	Filing Date (YYYY-MM-DD)	Docket Number (if applicable)
5481712	1996-01-02	08043295	1993-04-06	PM 007100/0000007

CAUTION: Maintenance fee (and surcharge, if any) payment must correctly identify: (1) the patent number and (2) the application number of the actual U.S. application leading to issuance of that patent to ensure the fee(s) is/are associated with the correct patent. 37 CFR 1.366(c) and (d).

SMALL ENTITY
☐ Patentee claims, or has previously claimed, small entity status. See 37 CFR 1.27.

LOSS OF ENTITLEMENT TO SMALL ENTITY STATUS
☐ Patentee is no longer entitled to small entity status. See 37 CFR 1.27(g)

NOT Small Entity		Small Entity	
Fee	Code	Fee	Code
○ 3 ½ year	(1551)	○ 3 ½ year	(2551)
○ 7 ½ year	(1552)	○ 7 ½ year	(2552)
◉ 11 ½ year	(1553)	○ 11 ½ year	(2553)

SURCHARGE
The surcharge required by 37 CFR 1.20(i)(2) (Fee Code 1558) must be paid as a condition of accepting unintentionally delayed payment of the maintenance fee.

MAINTENANCE FEE (37 CFR 1.20(e)-(g))
The appropriate maintenance fee must be submitted with this petition.

STATEMENT
THE UNDERSIGNED CERTIFIES THAT THE DELAY IN PAYMENT OF THE MAINTENANCE FEE TO THIS PATENT WAS UNINTENTIONAL

PETITIONER(S) REQUEST THAT THE DELAYED PAYMENT OF THE MAINTENANCE FEE BE ACCEPTED AND THE PATENT REINSTATED

THIS PORTION MUST BE COMPLETED BY THE SIGNATORY OR SIGNATORIES

37 CFR 1.378(d) states: "Any petition under this section must be signed by an attorney or agent registered to practice before the Patent and Trademark Office, or by the patentee, the assignee, or other party in interest."

I certify, in accordance with 37 CFR 1.4(d)(4) that I am

◉ An attorney or agent registered to practice before the Patent and Trademark Office

○ A sole patentee

○ A joint patentee; I certify that I am authorized to sign this submission on behalf of all the other patentees.

○ A joint patentee; all of whom are signing this e-petition

○ The assignee of record of the entire interest

Patent Practitioner			
A signature of the applicant or representative is required in accordance with 37 CFR 1.33 and 10.18. Please see 37 CFR 1.4(d) for the form of the signature			
Signature	/Tracy M. Calabresi/	Date (YYYY-MM-DD)	2008-03-31
Name	Tracy M. Calabresi	Registration Number	38920

This collection of information is required by 37 CFR 1.378(c). The information is required to obtain or retain a benefit by the public which is to file (and by the USPTO to process) an application. Confidentiality is governed by 35 U.S.C. 122 and 37 CFR 1.11 and 1.14. This collection is estimated to take 1 hour to complete, including gathering, preparing, and submitting the completed application form to the USPTO. Time will vary depending upon the individual case. Any comments on the amount of time you require to complete this form and/ or suggestions for reducing this burden, should be sent to the Chief Information Officer, U.S. Patent and Trademark Office, U.S. Department of Commerce, P.O. Box 1450, Alexandria, VA 22313-1450. DO NOT SEND FEES OR COMPLETED FORMS TO THIS ADDRESS. **This form can only be used when in conjunction with EFS-Web. If this form is mailed to the USPTO, it may cause delays in reinstating the patent.**

Privacy Act Statement

The Privacy Act of 1974 (P.L. 93-579) requires that you be given certain information in connection with your submission of the attached form related to a patent application or patent. Accordingly, pursuant to the requirements of the Act, please be advised that: (1) the general authority for the collection of this information is 35 U.S.C. 2(b)(2); (2) furnishing of the information solicited is voluntary; and (3) the principal purpose for which the information is used by the U.S. Patent and Trademark Office is to process and/or examine your submission related to a patent application or patent. If you do not furnish the requested information, the U.S. Patent and Trademark Office may not be able to process and/or examine your submission, which may result in termination of proceedings or abandonment of the application or expiration of the patent.

The information provided by you in this form will be subject to the following routine uses:

1. The information on this form will be treated confidentially to the extent allowed under the Freedom of Information Act (5 U.S.C. 552) and the Privacy Act (5 U.S.C. 552a). Records from this system of records may be disclosed to the Department of Justice to determine whether the Freedom of Information Act requires disclosure of these record s.

2. A record from this system of records may be disclosed, as a routine use, in the course of presenting evidence to a court, magistrate, or administrative tribunal, including disclosures to opposing counsel in the course of settlement negotiations.

3. A record in this system of records may be disclosed, as a routine use, to a Member of Congress submitting a request involving an individual, to whom the record pertains, when the individual has requested assistance from the Member with respect to the subject matter of the record.

4. A record in this system of records may be disclosed, as a routine use, to a contractor of the Agency having need for the information in order to perform a contract. Recipients of information shall be required to comply with the requirements of the Privacy Act of 1974, as amended, pursuant to 5 U.S.C. 552a(m).

5. A record related to an International Application filed under the Patent Cooperation Treaty in this system of records may be disclosed, as a routine use, to the International Bureau of the World Intellectual Property Organization, pursuant to the Patent Cooperation Treaty.

6. A record in this system of records may be disclosed, as a routine use, to another federal agency for purposes of National Security review (35 U.S.C. 181) and for review pursuant to the Atomic Energy Act (42 U.S.C. 218(c)).

7. A record from this system of records may be disclosed, as a routine use, to the Administrator, General Services, or his/her designee, during an inspection of records conducted by GSA as part of that agency's responsibility to recommend improvements in records management practices and programs, under authority of 44 U.S.C. 2904 and 2906. Such disclosure shall be made in accordance with the GSA regulations governing inspection of records for this purpose, and any other relevant (i.e., GSA or Commerce) directive. Such disclosure shall not be used to make determinations about individuals.

8. A record from this system of records may be disclosed, as a routine use, to the public after either publication of the application pursuant to 35 U.S.C. 122(b) or issuance of a patent pursuant to 35 U.S.C. 151. Further, a record may be disclosed, subject to the limitations of 37 CFR 1.14, as a routine use, to the public if the record was filed in an application which became abandoned or in which the proceedings were terminated and which application is referenced by either a published application, an application open to public inspections or an issued patent.

9. A record from this system of records may be disclosed, as a routine use, to a Federal, State, or local law enforcement agency, if the USPTO becomes aware of a violation or potential violation of law or regulation.

UNITED STATES PATENT AND TRADEMARK OFFICE

Commissioner for Patents
United States Patent and Trademark Office
P.O. Box 1450
Alexandria, VA 22313-1450
www.uspto.gov

In re Patent No. 5481712
Issue Date: January 2,1996
Application No. 08043295
Filed: April 6,1993
Attorney Docket No. PM 007100/0000007

:
:DECISION GRANTING PETITION
:UNDER 37 CFR 1.378(c)
:

This is a decision on the electronic petition, filed April 1,2008 ,under 37 CFR 1.378(c) to accept the unintentionally delayed payment of the 11.5 year maintenance fee for the above-identified patent.

The petition is GRANTED.

The maintenance fee is accepted, and the above-identified patent reinstated as of April 1,2008 . This decision also constitutes notice that the fee has been accepted. An electronic copy of the petition and this decision has been created as an entry in an Image File Wrapper. Nevertheless, petitioner should print and retain an independent copy

Telephone inquires related to this electronic decision should be directed to the Electronic Business Center at 1-866-217-9197.

UNITED STATES PATENT AND TRADEMARK OFFICE

Commissioner for Patents
United States Patent and Trademark Office
P.O. Box 1450
Alexandria, VA 22313-1450
www.uspto.gov

SUGHRUE, MION, ZINN, MAC PEAK & SEAS
2100 PENNSYLVANIA AVE., N.W.
WASHINGTON DC 20037

COPY MAILED

JAN 3 1 2008

OFFICE OF PETITIONS

In re Patent No. 6091373	:	
Issue Date: 07/18/2000	:	
Application No. 08/044113	:	ON PETITION
Filing or 371(c) Date: 04/08/1993	:	
Atty. Docket No. Q-27533-1	:	

This is a decision on the Petition Under 37 CFR 1.182 for Duplicate Letters Patent Under 37 CFR 1.182, filed August 24, 2007. The delay in treating this petition is regretted.

The petition is **GRANTED**.

The Publishing Division is directed to issue a duplicate Letters Patent.

The $400 fee for the petition under 37 CFR 1.182 has been assessed to petitioner's deposit account.

Questions concerning this decision may be directed to the undersigned at 571-232-3232. Inquiries regarding the issuance of a duplicate Letters Patent may be directed to Krystal Paige in the Publishing Division at (703) 308-9250, Ext. 139.

A copy of this decision is being faxed to Publishing Division for issuance of a duplicate Letters Patent.

Derek L. Woods
Attorney
Office of Petitions

CC: Krystal Paige
South Tower 8th floor, Room C-32 (FAX 571-270-9937)

Under the Paperwork Reduction Act of 1995, no persons are required to respond to a collection of information unless it displays valid OMB control number.

PETITION TO ACCEPT UNINTENTIONALLY DELAYED PAYMENT OF MAINTENANCE FEE IN AN EXPIRED PATENT (37 CFR 1.378(c))

Patent Number	Issue Date (YYYY-MM-DD)	Application Number	Filing Date (YYYY-MM-DD)	Docket Number (if applicable)
5,468,611	1995-11-21	08/045,530	1993-04-08	160180.00043

CAUTION: Maintenance fee (and surcharge, if any) payment must correctly identify: (1) the patent number and (2) the application number of the actual U.S. application leading to issuance of that patent to ensure the fee(s) is/are associated with the correct patent. 37 CFR 1.366(c) and (d).

SMALL ENTITY
☐ Patentee claims, or has previously claimed, small entity status. See 37 CFR 1.27.

LOSS OF ENTITLEMENT TO SMALL ENTITY STATUS
☒ Patentee is no longer entitled to small entity status. See 37 CFR 1.27(g)

NOT Small Entity		Small Entity	
Fee	Code	Fee	Code
○ 3 ½ year	(1551)	○ 3 ½ year	(2551)
○ 7 ½ year	(1552)	○ 7 ½ year	(2552)
◉ 11 ½ year	(1553)	○ 11 ½ year	(2553)

SURCHARGE
The surcharge required by 37 CFR 1.20(i)(2) (Fee Code 1558) must be paid as a condition of accepting unintentionally delayed payment of the maintenance fee.

MAINTENANCE FEE (37 CFR 1.20(e)-(g))
The appropriate maintenance fee must be submitted with this petition.

STATEMENT
THE UNDERSIGNED CERTIFIES THAT THE DELAY IN PAYMENT OF THE MAINTENANCE FEE TO THIS PATENT WAS UNINTENTIONAL

PETITIONER(S) REQUEST THAT THE DELAYED PAYMENT OF THE MAINTENANCE FEE BE ACCEPTED AND THE PATENT REINSTATED

THIS PORTION MUST BE COMPLETED BY THE SIGNATORY OR SIGNATORIES

37 CFR 1.378(d) states: "Any petition under this section must be signed by an attorney or agent registered to practice before the Patent and Trademark Office, or by the patentee, the assignee, or other party in interest."

I certify, in accordance with 37 CFR 1.4(d)(4) that I am

◉ An attorney or agent registered to practice before the Patent and Trademark Office

○ A sole patentee

○ A joint patentee; I certify that I am authorized to sign this submission on behalf of all the other patentees.

○ A joint patentee; all of whom are signing this e-petition

○ The assignee of record of the entire interest

Patent Practitioner			
A signature of the applicant or representative is required in accordance with 37 CFR 1.33 and 10.18. Please see 37 CFR 1.4(d) for the form of the signature			
Signature	/Keith H. Heidmann/	Date (YYYY-MM-DD)	2008-09-29
Name	Keith H. Heidmann	Registration Number	61774

This collection of information is required by 37 CFR 1.378(c). The information is required to obtain or retain a benefit by the public which is to file (and by the USPTO to process) an application. Confidentiality is governed by 35 U.S.C. 122 and 37 CFR 1.11 and 1.14. This collection is estimated to take 1 hour to complete, including gathering, preparing, and submitting the completed application form to the USPTO. Time will vary depending upon the individual case. Any comments on the amount of time you require to complete this form and/ or suggestions for reducing this burden, should be sent to the Chief Information Officer, U.S. Patent and Trademark Office, U.S. Department of Commerce, P.O. Box 1450, Alexandria, VA 22313-1450. DO NOT SEND FEES OR COMPLETED FORMS TO THIS ADDRESS. **This form can only be used when in conjunction with EFS-Web. If this form is mailed to the USPTO, it may cause delays in reinstating the patent.**

Privacy Act Statement

The Privacy Act of 1974 (P.L. 93-579) requires that you be given certain information in connection with your submission of the attached form related to a patent application or patent. Accordingly, pursuant to the requirements of the Act, please be advised that: (1) the general authority for the collection of this information is 35 U.S.C. 2(b)(2); (2) furnishing of the information solicited is voluntary; and (3) the principal purpose for which the information is used by the U.S. Patent and Trademark Office is to process and/or examine your submission related to a patent application or patent. If you do not furnish the requested information, the U.S. Patent and Trademark Office may not be able to process and/or examine your submission, which may result in termination of proceedings or abandonment of the application or expiration of the patent.

The information provided by you in this form will be subject to the following routine uses:

1. The information on this form will be treated confidentially to the extent allowed under the Freedom of Information Act (5 U.S.C. 552) and the Privacy Act (5 U.S.C. 552a). Records from this system of records may be disclosed to the Department of Justice to determine whether the Freedom of Information Act requires disclosure of these record s.

2. A record from this system of records may be disclosed, as a routine use, in the course of presenting evidence to a court, magistrate, or administrative tribunal, including disclosures to opposing counsel in the course of settlement negotiations.

3. A record in this system of records may be disclosed, as a routine use, to a Member of Congress submitting a request involving an individual, to whom the record pertains, when the individual has requested assistance from the Member with respect to the subject matter of the record.

4. A record in this system of records may be disclosed, as a routine use, to a contractor of the Agency having need for the information in order to perform a contract. Recipients of information shall be required to comply with the requirements of the Privacy Act of 1974, as amended, pursuant to 5 U.S.C. 552a(m).

5. A record related to an International Application filed under the Patent Cooperation Treaty in this system of records may be disclosed, as a routine use, to the International Bureau of the World Intellectual Property Organization, pursuant to the Patent Cooperation Treaty.

6. A record in this system of records may be disclosed, as a routine use, to another federal agency for purposes of National Security review (35 U.S.C. 181) and for review pursuant to the Atomic Energy Act (42 U.S.C. 218(c)).

7. A record from this system of records may be disclosed, as a routine use, to the Administrator, General Services, or his/her designee, during an inspection of records conducted by GSA as part of that agency's responsibility to recommend improvements in records management practices and programs, under authority of 44 U.S.C. 2904 and 2906. Such disclosure shall be made in accordance with the GSA regulations governing inspection of records for this purpose, and any other relevant (i.e., GSA or Commerce) directive. Such disclosure shall not be used to make determinations about individuals.

8. A record from this system of records may be disclosed, as a routine use, to the public after either publication of the application pursuant to 35 U.S.C. 122(b) or issuance of a patent pursuant to 35 U.S.C. 151. Further, a record may be disclosed, subject to the limitations of 37 CFR 1.14, as a routine use, to the public if the record was filed in an application which became abandoned or in which the proceedings were terminated and which application is referenced by either a published application, an application open to public inspections or an issued patent.

9. A record from this system of records may be disclosed, as a routine use, to a Federal, State, or local law enforcement agency, if the USPTO becomes aware of a violation or potential violation of law or regulation.

UNITED STATES PATENT AND TRADEMARK OFFICE

Commissioner for Patents
United States Patent and Trademark Office
P.O. Box 1450
Alexandria, VA 22313-1450
www.uspto.gov

In re Patent No. 5468611
Issue Date: November 21,1995
Application No. 08045530
Filed: April 8,1993
Attorney Docket No. 54760/143

:
:DECISION GRANTING PETITION
:UNDER 37 CFR 1.378(c)
:

This is a decision on the electronic petition, filed September 29,2008 ,under 37 CFR 1.378(c) to accept the unintentionally delayed payment of the 11.5 year maintenance fee for the above-identified patent.

The petition is **GRANTED**.

The maintenance fee is accepted, and the above-identified patent reinstated as of September 29,2008 . This decision also constitutes notice that the fee has been accepted. An electronic copy of the petition and this decision has been created as an entry in the Image File Wrapper. Nevertheless, petitioner should print and retain an independent copy.

Telephone inquiries related to this electronic decision should be directed to the Electronic Business Center at 1-866-217-9197.

UNITED STATES PATENT AND TRADEMARK OFFICE

Commissioner for Patents
United States Patent and Trademark Office
P.O. Box 1450
Alexandria, VA 22313-1450
www.uspto.gov

Paper No. 24

PETER I. LIPPMAN
4385 OCEAN VIEW BLVD.
MONTROSE, CA 91020

COPY MAILED

JUL 15 2005

OFFICE OF PETITIONS

In re Application of
Bowker et al.
Patent No. 5,467,122
Application No. 08/046,335
Filed: April 12, 1993
Issued: November 14, 1995
Attorney Docket No. xAA-05

ON PETITION

This is a decision on the petition under 37 CFR 1.378(c), filed March 15, 2004, to accept the delayed payment of a maintenance fee for the above-identified patent.

The petition is **DISMISSED**.

If reconsideration of this decision is desired, a petition for reconsideration under 37 CFR 1.378(e) must be filed within TWO (2) MONTHS from the mail date of this decision. No extension of this two-month time limit can be granted under 37 CFR 1.136(a) or (b). This is **not** final agency action within the meaning of 5 U.S.C. § 704.

A petition to accept the unintentionally delayed payment of a maintenance fee under 35 U.S.C. § 41(c) and 37 CFR 1.378(c) must be accompanied by: (1) a statement that the delay was unintentional; (2) payment of the appropriate maintenance fee, unless previously submitted; (3) payment of the surcharge set forth in 37 CFR 1.20(i)(2).

This petition lacks items (2) and (3) above. The funds were attempted to be collected from petitioner's deposit account, No. 12-1639 numerous times, but there was never sufficient funds. As of July 2005, the account is listed as having a negative balance. Accordingly, to reinstate the above-identified application, petitioner must supply the maintenance fee and the $1640.00 surcharge.

Any petition for reconsideration of this decision must be accompanied by the petition fee of $130 as set forth in 37 CFR 1.17(h). The petition for reconsideration must include the lacking item(s) noted above, since, after a decision on the petition for reconsideration, no further reconsideration or review of the matter will be undertaken by the Commissioner.

Petitioner should note that if this petition is not renewed, or if renewed and not granted, then the maintenance fees and post expiration surcharge are refundable. Petitioner may request a refund of the fees submitted on March 17, 2004. Please send all requests for refunds to the following address:

Mail Stop 16
Director of the US Patent and Trademark Office
P.O. Box 1450
Alexandria, VA 22313-1450

A copy of this decision should accompany petitioner's request.

Further correspondence with respect to this matter should be addressed as follows:

By mail: Mail Stop PETITIONS
Commissioner for Patents
Post Office Box 1450
Alexandria, VA 22313-1450

By hand: Customer Window located at:

U.S. Patent and Trademark Office
Customer Service Window Randolph Building
401 Dulany Street
Alexandria, VA 22314

By fax: (571) 273-8300
ATTN: Office of Petitions

Any questions concerning this matter may be directed to the undersigned at (571) 272-3206.

Liana Chase

Liana Chase
Petitions Examiner
Office of Petitions
Office of the Deputy Commissioner
for Patent Examination Policy

UNITED STATES PATENT AND TRADEMARK OFFICE

Commissioner for Patents
United States Patent and Trademark Office
P.O. Box 1450
Alexandria, VA 22313-1450
www.uspto.gov

PETER I. LIPPMAN
17900 MOCKINGBIRD DRIVE
RENO NV 89506

COPY MAILED

JAN 23 2008

OFFICE OF PETITIONS

In re Patent No. 5,467,122	:	
Issued: 11/14/1995	:	DECISION ON PETITION
Application No. 08/046,335	:	
Filed: 04/12/1993	:	
Attorney Docket No. xAA-05	:	

This is in response to the petition under 37 CFR 1.378(b), filed June 5, 2007, to accept the unavoidably delayed payment of the maintenance fee for the above-identified patent.

The petition is dismissed.

If reconsideration of this decision is desired, a petition for reconsideration under 37 CFR 1.378(e) must be filed within TWO (2) MONTHS from the mail date of this decision. No extension of this two-month time limit can be granted under 37 CFR 1.136(a) or (b). Any such petition for reconsideration must be accompanied by the petition fee of $400.00 as set forth in 37 CFR 1.17(f). The petition for reconsideration should include an exhaustive attempt to provide the lacking item(s) noted below because the Director will not undertaken any further reconsideration or review of the matter after a decision on the petition for reconsideration.

The patent issued on November 14, 1995. The second maintenance fee could have been paid during the period from November 14, 2002 through May 14, 2003 or with a surcharge during the period from May 15, 2003 through November 14, 2003. Accordingly, this patent expired on November 15, 2003, for failure to timely remit the second maintenance fee.

On March 15, 2004, petitioners filed a petition under 37 CFR 1.378(c), which was dismissed by the decision of July 15, 2005. The decision stated that the Office attempted to collect the maintenance fee payment and the surcharge from petitioners' Deposit Account numerous times; however, as of July of 2005, the account was listed as having a negative balance. The decision set a two-month period, with no extensions of the time limit, to file a request for reconsideration under 37 CFR 1.378(e), accompanied by a petition fee, the maintenance fee, and the surcharge. On June 5, 2007, petitioners submitted the present petition under 37 CFR 1.378(b) and a check in the amount of $3,815.00 as payment for the second and third maintenance fees and the surcharge.

The Director may accept the payment of any maintenance fee due on a patent after expiration of the patent if, upon petition, the delay in payment of the maintenance fee is shown to the satisfaction of the Director to have been unavoidable and if the surcharge required by § 1.20(i) is paid as a condition of accepting payment of the maintenance fee. 37 CFR 1.378(a).

A grantable petition to accept a delayed maintenance fee payment under 37 CFR 1.378(b) must include the following:

> (1) the required maintenance fee set forth in § 1.20(e) through (g);
>
> (2) the surcharge set forth in § 1.20(i)(1); and
>
> (3) a showing that the delay was unavoidable since reasonable care was taken to ensure that the maintenance fee would be paid timely and that the petition was filed promptly after the patentee was notified of, or otherwise became aware of, the expiration of the patent. The showing must enumerate the steps taken to ensure timely payment of the maintenance fee, the date and the manner in which patentee became aware of the expiration of the patent, and the steps taken to file the petition promptly.

This petition lacks requirement (3).

Acceptance of a late maintenance fee under the unavoidable delay standard is considered under the same standard for reviving an abandoned application under 35 U.S.C. § 133. This is a very stringent standard. Decisions on reviving abandoned applications on the basis of "unavoidable" delay have adopted the reasonably prudent person standard in determining if the delay was unavoidable:

> The word unavoidable' . . . is applicable to ordinary human affairs, and requires no more or greater care or diligence than is generally used and observed by prudent and careful men in relation to their most important business. It permits them in the exercise of this care to rely upon the ordinary and trustworthy agencies of mail and telegraph, worthy and reliable employees, and such other means and instrumentalities as are usually employed in such important business. If unexpectedly, or through the unforeseen fault or imperfection of these agencies and instrumentalities, there occurs a failure, it may properly be said to be unavoidable, all other conditions of promptness in its rectification being present. In re Mattullath, 38 App. D.C. 497, 514-15 (1912) (quoting Pratt, 1887 Dec. Comm'r Pat. 31, 32-33 (1887)); see also Winkler v. Ladd, 221 F. Supp. 550, 552, 138 USPQ 666, 667-68 (D.D.C. 1963), aff'd, 143 USPQ 172 (D.C. Cir. 1963); Ex parte Henrich, 1913 Dec. Comm'r Pat. 139, 141 (1913).

In addition, decisions on revival are made on a "case-by-case basis, taking all the facts and circumstances into account." Smith v. Mossinghoff, 671 F.2d 533, 538, 213 USPQ 977, 982 (D.C. Cir. 1982). Finally, a petition cannot be granted where a petitioner has failed to meet his or her

burden of establishing that the delay was "unavoidable." Haines v. Quigg, 673 F. Supp. 314, 316-17, 5 USPQ2d 1130, 1131-32 (N.D. Ind. 1987).

In determining whether the delay in paying a maintenance fee was unavoidable, one looks to whether the party responsible for payment of the maintenance fee exercised the due care of a reasonably prudent person. Ray v. Lehman, 55 F.3d 606, 608-609, 34 USPQ2d 1786, 1787 (Fed. Cir. 1995). The patent owner at the time of the expiration of the patent is ultimately the person responsible to ensure the timely payment of the maintenance fees. The patent owner may engage another to track and/or pay the maintenance fees; however, merely engaging another does not relieve the patent owner from his obligation to take appropriate steps to ensure the timely payment of such maintenance fees. See California Medical Prods. v. Tecnol Medical Prods., 921 F. Supp. 1219, 1259 (D. Del. 1995). Moreover, the USPTO must rely on the actions or inactions of duly authorized and voluntarily chosen representatives of an applicant, and an applicant is bound by the consequences of those actions or inactions. Link v. Wabash, 370 U.S. 626, 633-34 (1962); Huston v. Ladner, 973 F.2d 1564, 1567, 23 USPQ2d 1910, 1913 (Fed. Cir. 1992).

35 U.S.C. § 41(c)(1) does not require an affirmative finding that the delay was avoidable, but only an explanation as to why the petitioner has failed to carry his burden to establish that the delay was unavoidable. See Commissariat A. L'Energie Atomique v. Watson, 274 F.2d 594, 597, 124 USPQ 126, 128 (D.C. Cir. 1960). Petitioners are reminded that it is the patentee's burden under the statutes and regulations to make a showing to the satisfaction of the Director that the delay in payment of a maintenance fee is unavoidable. See Rydeen v. Quigg, 748 F. Supp. 900, 16 USPQ2d 1876 (D.D.C. 1990), aff'd 937 F.2d 623 (Fed. Cir. 1991).

As 35 USC § 41(b) requires the payment of fees at specified intervals to maintain a patent in force, rather than some response to a specific action by the Office under 35 USC § 133, a reasonably prudent person in the exercise of due care and diligence would have taken steps to ensure the timely payment of such maintenance fees. Ray v. Lehman, 55 F.3d 606, 609, 34 USPQ2d 1786, 1787 (Fed. Cir. 1995). That is, an adequate showing that the delay in payment of the maintenance fee at issue was "unavoidable" within the meaning of 35 U.S.C. § 41(c) and 37 CFR 1.378(b)(3) requires a showing of the steps taken by the responsible party to ensure the timely payment of the second maintenance fee for this patent. Ray, 55 F.3d at 609, 34 USPQ2d at 1788.

There are three periods to be considered during the evaluation of a petition under 37 CFR 1.378(b):

(1) The delay in reply that originally resulted in expiration;
(2) The delay in filing an initial petition pursuant to § 1.378(b) to revive the application; and
(3) The delay in filing a *grantable* petition pursuant to § 1.378(b) to revive the application.

This petition lacks the showing required by periods (2) and (3).

Petitioners asserted that the delay in paying the second maintenance fee was unavoidable because they were not aware of the decision dismissing their petition under 37 CFR 1.378(c), filed March

15, 2004. Specifically, petitioners explained that they submitted a change of correspondence address associated with the Customer Number on June 9, 2004, which was acknowledged by the USPTO on December 14, 2004. Petitioners asserted they did not receive a copy of the original decision of July 15, 2004, dismissing their petition under 37 CFR 1.378(c) because the USPTO mailed the decision to an obsolete address. In support of the assertion of non-receipt of the decision of July 15, 2004, petitioners provided a copy of the docket calendar of practitioner, Peter Lippman, which revealed no deadline for reply to the dismissal had been entered. Petitioners indicated that they first became aware that the patent was not in force on March 21, 2007, when Lippman was looking on the USPTO website to determine the amount of the third maintenance fee. Petitioners stated that they did not receive a facsimile copy of the decision until April 27, 2007.

Petitioners stated that "[i]n [Lippman's] bookkeeping system previously he has simply distributed, after the fact, funds flowing out of the deposit account -- based upon the monthly deposit-account reports – and has relied upon 'the system' to eventually sort out all such transactions." *Petition dated 06/05/07, p. 2.* Additionally, petitioners asserted that "unfortunately [Lippman] had taken for granted that the fees for his 2004 Petition would be withdrawn from his account within a few months --whether or not a Decision on Petition was generated in that time--and accordingly he was not watching the balance closely during the time interval (thirteen months later) when [the deciding official] apparently was checking for those Petition fees. *Petition dated 06/05/07, p. 27.*

At the onset, the Office sincerely apologizes for the mailing the decision of July 15, 2005, to an obsolete address. The Office concurs with petitioners that they submitted a timely change of correspondence with the USPTO prior to the mailing date the decision dismissing the petition. However, even if the Office excuses the delay attributed to the mailing of the decision to an incorrect address, the Office notes petitioners did not have sufficient funds in their deposit account to pay the maintenance fee and surcharge as of July 15, 2005.

Pursuant to 37 CFR 1.25(a),

> A minimum deposit of $1,000 [in the deposit account] is required for paying any fee due or in ordering any services offered by the Office.... At the end of each month, a deposit account statement will be rendered. A remittance must be made promptly upon receipt of the statement to cover the value of items or services charged to the account and thus restore the account to its established normal deposit value. An amount sufficient to cover all fees, services, copies, etc., requested must always be on deposit. Charges to accounts with insufficient funds will not be accepted. A service charge (§ 1.21(b)(2)) will be assessed for each month that the balance at the end of the month is below $1,000.

Therefore, "[a]n overdrawn account will be immediately suspended and no charges will be accepted against it until a proper balance is restored, together with a payment of $10 (37 CFR 1.21(b)(1)) to cover the work done by the U.S. Patent and Trademark Office incident to suspending and reinstating the account and dealing with charges which may have been made in the meantime."

MPEP 509.01. Moreover, the Office expects that an applicant or patentee will take reasonable precautions in all cases to avoid overdrafts. Id. A delay resulting from a lack of knowledge or improper application of the patent statute, rules of practice, or the MPEP does not constitute an "unavoidable" delay. See Haines v. Quigg, 673 F. Supp. 314, 317, 5 USPQ 1130, 1132 (N.D. Ind. 1987), Vincent v. Mossinghoff, 230 USPQ 621, 624 (D.D.C. 1985); Smith v. Diamond, 209 USPQ 1091 (D.D.C. 1981); Potter v. Dann, 201 USPQ 574 (D.D.C. 1978); Ex parte Murray, 1891 Dec. Comm'r Pat. 130, 131 (1891).

With respect to petitioners' statement that the Office did not notify them that the Office was unable to charge the deposit account for the maintenance fee and surcharge, it is petitioners' duty to ensure that a proper and timely response is submitted to the USPTO. While the Office attempts to timely notify applicants and patentees of deficiencies in their responses, it is under no obligation to do so. Furthermore, it is petitioners' responsibility to take reasonable precautions to avoid overdrafts and to make certain that the deposit account contains the required minimum deposit of $1,000 when authorizing the payment of any fees due. A payment of less than the required amount, a payment in a manner other than that set forth in 37 CFR 1.23, or the filing of an authorization to charge a deposit account having insufficient funds, will not constitute payment of a maintenance fee and any necessary surcharge. In this instance, petitioners admitted that they did not regularly monitor the balance of the deposit account during the period in question. Petitioners' failure to keep sufficient funds in the deposit account constitutes an avoidable mistake.

Moreover, a showing of diligence in matters before the USPTO is essential to support a finding of unavoidable delay. See Futures Technology, Ltd. v. Quigg, 684 F. Supp. 430, 431, 7 USPQ2d 1588 (E.D. Va. 1988)(applicant's diligent inquiry into the status of the application is required to show unavoidable delay); Douglas v. Manbeck, 21 USPQ2d 1697, 1699-1700 (E.D. Pa. 1991), *aff'd*, 975 F.2d 869, 24 USPQ2d 1318 (Fed. Cir. 1992) (representation by counsel does not relieve the applicant from his obligation to exercise diligence before the USPTO; applicant's lack of diligence extending two and one half years overcame and superseded any omissions by his counsel). Diligent inquiry into the status of the patent is required.

Petitioners explained that "[t]he Petitioners in 2003 and 2004 communicated with the PTO in good faith, attempting to maintain the subject patent -- but until late April [of 2007] received no message stating that their communications had failed." *Petition dated 06/05/07, p. 1.* "Until then they also were not able to obtain a statement of the reason for failure of their 2004 communication." Id. Petitioners averred that their actions did not equate to a lapse in their duty of due care as they were not aware of any "standard" time period for deciding a petition under 37 CFR 1.378(c). Rather, petitioners indicated that the length of time seemed to be long but plausible for consideration of a petition and that the staff of the Office of Petitions appeared "swamped with work." Petitioners stated that it did not seem helpful or courteous for Mr. Lippman to "pester" the Office of Petitions staff. "Rather seemed more appropriate (and perhaps a patriotic duty) that he patiently let the matter lie -- until receiving a decision in due course." *Petition dated 06/05/07, pp. 20-21.*

There is no evidence that petitioners were misled to believe that the USPTO granted their original petition, accepted the maintenance fee and surcharge, or reinstated the patent. Petitioners may not have received the decision of July 15, 2005, dismissing their petition; however, the test is whether petitioners exercised due diligence to find out and correct the problem. See generally, Douglas v. Manbeck, 21 USPQ2d 1697, 1699-1700 (E.D. Pa. 1991), *aff'd*, 975 F.2d 869, 24 USPQ2d 1318 (Fed. Cir. 1992) (applicant has a duty to make sure his application is being prosecuted). The record reveals that petitioners failed to exercise due diligence with regard to the maintenance of the patent as petitioners did not inquire into the status of their petition for approximately three years from its filing. Petitioner simply had no system in place at that time for following up on the status of a petition if they did not receive a decision from the USPTO. Therefore, since petitioners did not receive the decision of July 15, 2005, petitioners did not make any entry into the docket calendar regarding the status of the petition or any action needed. Petitioners admitted that they could have followed up with the USPTO but decided "to let the matter lie – until receiving a decision in due course." *Petition dated 06/05/07, pp. 20.* This inaction is the antithesis of diligence on the part of petitioners to ensure that the patent was maintained. A prudent and careful person acting in relation to his most important business would have taken steps to confirm whether the petition was granted, that the maintenance fee and any surcharge were accepted, and that the patent was reinstated. Accordingly, the lack of due diligence by petitioners overcame any error in mailing the decision of July 15, 2005, to an obsolete address. If petitioners would have exercised due care of a reasonably prudent person and monitored their deposit account or inquired into the status of the petition, petitioners could have avoided or been able to act to correct the situation in a more timely fashion.

The showing of record is inadequate to establish to the satisfaction of the Office that the delay in payment of a maintenance fee is unavoidable within the meaning of 37 CFR 1.378(b). Accordingly, the petition is **dismissed**.

The Office acknowledges receipt of the maintenance fee payments due at 7.5 and 11.5 years in the amounts of $1,150.00 and $1,900.00, respectively, as well as the $700.00 surcharge after expiration. The $65.00 surcharge for late payment within six months in unnecessary and will be refunded to the Deposit Account. Petitioners should note that if this petition is not renewed, or if renewed and not granted, then the maintenance fees and post expiration surcharge are refundable. The $400.00 petition fee for seeking reconsideration is not refundable. Any request for refund should be in writing to the following address:

Mail Stop 16
Director of the US Patent and Trademark Office
PO Box 1450
Alexandria, VA 22313-1450

A copy of this decision should accompany petitioners' request.

Further correspondence with respect to this matter should be addressed as follows:

By mail: Mail Stop Petition
Commissioner for Patents
P.O. Box 1450
Alexandria, VA 22313-1450

By FAX: (571) 273-8300
Attn: Office of Petitions

By hand: Customer Service Window
Randolph Building
401 Dulany Street
Alexandria, VA 22314

Additionally, correspondence may be submitted electronically by EFS-Web.

Telephone inquiries concerning this matter may be directed to the undersigned at (571) 272-3211.

C. T. Donnell

Christina Tartera Donnell
Senior Petitions Attorney
Office of Petitions

UNITED STATES PATENT AND TRADEMARK OFFICE

Commissioner for Patents
United States Patent and Trademark Office
P.O. Box 1450
Alexandria, VA 22313-1450
www.uspto.gov

COPY MAILED

MAY 28 2008

OFFICE OF PETITIONS

PETER I. LIPPMAN
17900 MOCKINGBIRD DRIVE
RENO NV 89506

In re Patent No. 5,467,122	:	
Issued: 11/14/1995	:	DECISION ON PETITION
Application No. 08/046,335	:	
Filed: 04/12/1993	:	
Attorney Docket No. xAA-05	:	

This is in response to the petition under 37 CFR 1.378(e), filed March 24, 2008, to accept the unavoidably delayed payment of the maintenance fee for the above-identified patent.

The patent issued on November 14, 1995. The second maintenance fee could have been paid during the period from November 14, 2002 through May 14, 2003 or with a surcharge during the period from May 15, 2003 through November 14, 2003. Accordingly, this patent expired on November 15, 2003, for failure to timely remit the second maintenance fee.

In the present petition, petitioners showed that the delay in paying the maintenance was unavoidable. Additionally, petitioner paid the appropriate maintenance fees, surcharge and petition fee. Accordingly, the petition is granted. The maintenance fee in this case is accepted and the above-identified patent is hereby reinstated as of the mail date of this decision.

Telephone inquiries concerning this matter may be directed to the undersigned at (571) 272-3211.

Christina Tartera Donnell

Christina Tartera Donnell
Senior Petitions Attorney
Office of Petitions

Approved for use through 04/30/2009. OMB 0651-0016
U.S. Patent and Trademark Office: U.S. DEPARTMENT OF COMMERCE
Under the Paperwork Reduction Act of 1995, no persons are required to respond to a collection of information unless it displays valid OMB control number.

PETITION TO ACCEPT UNINTENTIONALLY DELAYED PAYMENT OF MAINTENANCE FEE IN AN EXPIRED PATENT (37 CFR 1.378(c))

Patent Number	Issue Date (YYYY-MM-DD)	Application Number	Filing Date (YYYY-MM-DD)	Docket Number (if applicable)
5361083	1994-11-01	08046467	1993-04-12	

CAUTION: Maintenance fee (and surcharge, if any) payment must correctly identify: (1) the patent number and (2) the application number of the actual U.S. application leading to issuance of that patent to ensure the fee(s) is/are associated with the correct patent. 37 CFR 1.366(c) and (d).

SMALL ENTITY
☒ Patentee claims, or has previously claimed, small entity status. See 37 CFR 1.27.

LOSS OF ENTITLEMENT TO SMALL ENTITY STATUS
☐ Patentee is no longer entitled to small entity status. See 37 CFR 1.27(g)

NOT Small Entity			Small Entity		
	Fee	Code		Fee	Code
○	3 ½ year	(1551)	○	3 ½ year	(2551)
○	7 ½ year	(1552)	○	7 ½ year	(2552)
○	11 ½ year	(1553)	◉	11 ½ year	(2553)

SURCHARGE
The surcharge required by 37 CFR 1.20(i)(2) (Fee Code 1558) must be paid as a condition of accepting unintentionally delayed payment of the maintenance fee.

MAINTENANCE FEE (37 CFR 1.20(e)-(g))
The appropriate maintenance fee must be submitted with this petition.

STATEMENT
THE UNDERSIGNED CERTIFIES THAT THE DELAY IN PAYMENT OF THE MAINTENANCE FEE TO THIS PATENT WAS UNINTENTIONAL

PETITIONER(S) REQUEST THAT THE DELAYED PAYMENT OF THE MAINTENANCE FEE BE ACCEPTED AND THE PATENT REINSTATED

THIS PORTION MUST BE COMPLETED BY THE SIGNATORY OR SIGNATORIES

37 CFR 1.378(d) states: "Any petition under this section must be signed by an attorney or agent registered to practice before the Patent and Trademark Office, or by the patentee, the assignee, or other party in interest."

I certify, in accordance with 37 CFR 1.4(d)(4) that I am

◉ An attorney or agent registered to practice before the Patent and Trademark Office

○ A sole patentee

○ A joint patentee; I certify that I am authorized to sign this submission on behalf of all the other patentees.

○ A joint patentee; all of whom are signing this e-petition

○ The assignee of record of the entire interest

Patent Practitioner			
A signature of the applicant or representative is required in accordance with 37 CFR 1.33 and 10.18. Please see 37 CFR 1.4(d) for the form of the signature			
Signature	/allan jacobson/	Date (YYYY-MM-DD)	2007-06-14
Name	ALLAN JACOBSON	Registration Number	29079

This collection of information is required by 37 CFR 1.378(c). The information is required to obtain or retain a benefit by the public which is to file (and by the USPTO to process) an application. Confidentiality is governed by 35 U.S.C. 122 and 37 CFR 1.11 and 1.14. This collection is estimated to take 1 hour to complete, including gathering, preparing, and submitting the completed application form to the USPTO. Time will vary depending upon the individual case. Any comments on the amount of time you require to complete this form and/ or suggestions for reducing this burden, should be sent to the Chief Information Officer, U.S. Patent and Trademark Office, U.S. Department of Commerce, P.O. Box 1450, Alexandria, VA 22313-1450. DO NOT SEND FEES OR COMPLETED FORMS TO THIS ADDRESS. **This form can only be used when in conjunction with EFS-Web. If this form is mailed to the USPTO, it may cause delays in reinstating the patent.**

Privacy Act Statement

The Privacy Act of 1974 (P.L. 93-579) requires that you be given certain information in connection with your submission of the attached form related to a patent application or patent. Accordingly, pursuant to the requirements of the Act, please be advised that: (1) the general authority for the collection of this information is 35 U.S.C. 2(b)(2); (2) furnishing of the information solicited is voluntary; and (3) the principal purpose for which the information is used by the U.S. Patent and Trademark Office is to process and/or examine your submission related to a patent application or patent. If you do not furnish the requested information, the U.S. Patent and Trademark Office may not be able to process and/or examine your submission, which may result in termination of proceedings or abandonment of the application or expiration of the patent.

The information provided by you in this form will be subject to the following routine uses:

1. The information on this form will be treated confidentially to the extent allowed under the Freedom of Information Act (5 U.S.C. 552) and the Privacy Act (5 U.S.C. 552a). Records from this system of records may be disclosed to the Department of Justice to determine whether the Freedom of Information Act requires disclosure of these record s.

2. A record from this system of records may be disclosed, as a routine use, in the course of presenting evidence to a court, magistrate, or administrative tribunal, including disclosures to opposing counsel in the course of settlement negotiations.

3. A record in this system of records may be disclosed, as a routine use, to a Member of Congress submitting a request involving an individual, to whom the record pertains, when the individual has requested assistance from the Member with respect to the subject matter of the record.

4. A record in this system of records may be disclosed, as a routine use, to a contractor of the Agency having need for the information in order to perform a contract. Recipients of information shall be required to comply with the requirements of the Privacy Act of 1974, as amended, pursuant to 5 U.S.C. 552a(m).

5. A record related to an International Application filed under the Patent Cooperation Treaty in this system of records may be disclosed, as a routine use, to the International Bureau of the World Intellectual Property Organization, pursuant to the Patent Cooperation Treaty.

6. A record in this system of records may be disclosed, as a routine use, to another federal agency for purposes of National Security review (35 U.S.C. 181) and for review pursuant to the Atomic Energy Act (42 U.S.C. 218(c)).

7. A record from this system of records may be disclosed, as a routine use, to the Administrator, General Services, or his/her designee, during an inspection of records conducted by GSA as part of that agency's responsibility to recommend improvements in records management practices and programs, under authority of 44 U.S.C. 2904 and 2906. Such disclosure shall be made in accordance with the GSA regulations governing inspection of records for this purpose, and any other relevant (i.e., GSA or Commerce) directive. Such disclosure shall not be used to make determinations about individuals.

8. A record from this system of records may be disclosed, as a routine use, to the public after either publication of the application pursuant to 35 U.S.C. 122(b) or issuance of a patent pursuant to 35 U.S.C. 151. Further, a record may be disclosed, subject to the limitations of 37 CFR 1.14, as a routine use, to the public if the record was filed in an application which became abandoned or in which the proceedings were terminated and which application is referenced by either a published application, an application open to public inspections or an issued patent.

9. A record from this system of records may be disclosed, as a routine use, to a Federal, State, or local law enforcement agency, if the USPTO becomes aware of a violation or potential violation of law or regulation.

UNITED STATES PATENT AND TRADEMARK OFFICE

Commissioner for Patents
United States Patent and Trademark Office
P.O. Box 1450
Alexandria, VA 22313-1450
www.uspto.gov

In re Patent No. 5361083
Issue Date: November 1,1994
Application No. 08046467
Filed: April 12,1993
Attorney Docket No. ROBICON2011I

:DECISION GRANTING PETITION
:UNDER 37 CFR 1.378(c)

This is a decision on the electronic petition, filed June 14,2007 ,under 37 CFR 1.378(c) to accept the unintentionally delayed payment of the 11.5 year maintenance fee for the above-identified patent.

The petition is GRANTED.

The maintenance fee is accepted, and the above-identified patent reinstated as of June 14,2007 . This decision also constitutes notice that the fee has been accepted. An electronic copy of the petition and this decision has been created as an entry in an Image File Wrapper. Nevertheless, petitioner should print and retain an independent copy

Telephone inquires related to this electronic decision should be directed to the Electronic Business Center at 1-866-217-9197.

PTO/SB/66 (03-09)
Approved for use through 03/31/2012. OMB 0651-0016
U.S. Patent and Trademark Office: U.S. DEPARTMENT OF COMMERCE
Under the Paperwork Reduction Act of 1995, no persons are required to respond to a collection of information unless it displays valid OMB control number.

PETITION TO ACCEPT UNINTENTIONALLY DELAYED PAYMENT OF MAINTENANCE FEE IN AN EXPIRED PATENT (37 CFR 1.378(c))

Patent Number	Issue Date (YYYY-MM-DD)	Application Number	Filing Date (YYYY-MM-DD)	Docket Number (if applicable)
6094306	2000-07-25	08047238	1993-04-13	ANVIK-273889

CAUTION: Maintenance fee (and surcharge, if any) payment must correctly identify: (1) the patent number and (2) the application number of the actual U.S. application leading to issuance of that patent to ensure the fee(s) is/are associated with the correct patent. 37 CFR 1.366(c) and (d).

SMALL ENTITY
☒ Patentee claims, or has previously claimed, small entity status. See 37 CFR 1.27.

LOSS OF ENTITLEMENT TO SMALL ENTITY STATUS
☐ Patentee is no longer entitled to small entity status. See 37 CFR 1.27(g)

NOT Small Entity		Small Entity	
Fee	Code	Fee	Code
○ 3 ½ year	(1551)	○ 3 ½ year	(2551)
○ 7 ½ year	(1552)	◉ 7 ½ year	(2552)
○ 11 ½ year	(1553)	○ 11 ½ year	(2553)

SURCHARGE
The surcharge required by 37 CFR 1.20(i)(2) (Fee Code 1558) must be paid as a condition of accepting unintentionally delayed payment of the maintenance fee.

MAINTENANCE FEE (37 CFR 1.20(e)-(g))
The appropriate maintenance fee must be submitted with this petition.

STATEMENT
THE UNDERSIGNED CERTIFIES THAT THE DELAY IN PAYMENT OF THE MAINTENANCE FEE TO THIS PATENT WAS UNINTENTIONAL

PETITIONER(S) REQUEST THAT THE DELAYED PAYMENT OF THE MAINTENANCE FEE BE ACCEPTED AND THE PATENT REINSTATED

THIS PORTION MUST BE COMPLETED BY THE SIGNATORY OR SIGNATORIES

37 CFR 1.378(d) states: "Any petition under this section must be signed by an attorney or agent registered to practice before the Patent and Trademark Office, or by the patentee, the assignee, or other party in interest."

I certify, in accordance with 37 CFR 1.4(d)(4) that I am

◉ An attorney or agent registered to practice before the Patent and Trademark Office

○ A sole patentee

○ A joint patentee; I certify that I am authorized to sign this submission on behalf of all the other patentees.

○ A joint patentee; all of whom are signing this e-petition

○ The assignee of record of the entire interest

Patent Practitioner			
A signature of the applicant or representative is required in accordance with 37 CFR 1.33 and 10.18. Please see 37 CFR 1.4(d) for the form of the signature			
Signature	/martin g. raskin/	Date (YYYY-MM-DD)	2010-07-20
Name	Martin G. Raskin	Registration Number	25642

This collection of information is required by 37 CFR 1.378(c). The information is required to obtain or retain a benefit by the public which is to file (and by the USPTO to process) an application. Confidentiality is governed by 35 U.S.C. 122 and 37 CFR 1.11 and 1.14. This collection is estimated to take 1 hour to complete, including gathering, preparing, and submitting the completed application form to the USPTO. Time will vary depending upon the individual case. Any comments on the amount of time you require to complete this form and/ or suggestions for reducing this burden, should be sent to the Chief Information Officer, U.S. Patent and Trademark Office, U.S. Department of Commerce, P.O. Box 1450, Alexandria, VA 22313-1450. DO NOT SEND FEES OR COMPLETED FORMS TO THIS ADDRESS. **This form can only be used when in conjunction with EFS-Web. If this form is mailed to the USPTO, it may cause delays in reinstating the patent.**

Privacy Act Statement

The Privacy Act of 1974 (P.L. 93-579) requires that you be given certain information in connection with your submission of the attached form related to a patent application or patent. Accordingly, pursuant to the requirements of the Act, please be advised that: (1) the general authority for the collection of this information is 35 U.S.C. 2(b)(2); (2) furnishing of the information solicited is voluntary; and (3) the principal purpose for which the information is used by the U.S. Patent and Trademark Office is to process and/or examine your submission related to a patent application or patent. If you do not furnish the requested information, the U.S. Patent and Trademark Office may not be able to process and/or examine your submission, which may result in termination of proceedings or abandonment of the application or expiration of the patent.

The information provided by you in this form will be subject to the following routine uses:

1. The information on this form will be treated confidentially to the extent allowed under the Freedom of Information Act (5 U.S.C. 552) and the Privacy Act (5 U.S.C. 552a). Records from this system of records may be disclosed to the Department of Justice to determine whether the Freedom of Information Act requires disclosure of these records.

2. A record from this system of records may be disclosed, as a routine use, in the course of presenting evidence to a court, magistrate, or administrative tribunal, including disclosures to opposing counsel in the course of settlement negotiations.

3. A record in this system of records may be disclosed, as a routine use, to a Member of Congress submitting a request involving an individual, to whom the record pertains, when the individual has requested assistance from the Member with respect to the subject matter of the record.

4. A record in this system of records may be disclosed, as a routine use, to a contractor of the Agency having need for the information in order to perform a contract. Recipients of information shall be required to comply with the requirements of the Privacy Act of 1974, as amended, pursuant to 5 U.S.C. 552a(m).

5. A record related to an International Application filed under the Patent Cooperation Treaty in this system of records may be disclosed, as a routine use, to the International Bureau of the World Intellectual Property Organization, pursuant to the Patent Cooperation Treaty.

6. A record in this system of records may be disclosed, as a routine use, to another federal agency for purposes of National Security review (35 U.S.C. 181) and for review pursuant to the Atomic Energy Act (42 U.S.C. 218(c)).

7. A record from this system of records may be disclosed, as a routine use, to the Administrator, General Services, or his/her designee, during an inspection of records conducted by GSA as part of that agency's responsibility to recommend improvements in records management practices and programs, under authority of 44 U.S.C. 2904 and 2906. Such disclosure shall be made in accordance with the GSA regulations governing inspection of records for this purpose, and any other relevant (i.e., GSA or Commerce) directive. Such disclosure shall not be used to make determinations about individuals.

8. A record from this system of records may be disclosed, as a routine use, to the public after either publication of the application pursuant to 35 U.S.C. 122(b) or issuance of a patent pursuant to 35 U.S.C. 151. Further, a record may be disclosed, subject to the limitations of 37 CFR 1.14, as a routine use, to the public if the record was filed in an application which became abandoned or in which the proceedings were terminated and which application is referenced by either a published application, an application open to public inspections or an issued patent.

9. A record from this system of records may be disclosed, as a routine use, to a Federal, State, or local law enforcement agency, if the USPTO becomes aware of a violation or potential violation of law or regulation.

UNITED STATES PATENT AND TRADEMARK OFFICE

Commissioner for Patents
United States Patent and Trademark Office
P.O. Box 1450
Alexandria, VA 22313-1450
www.uspto.gov

In re Patent No. 6094306
Issue Date: July 25,2000
Application No. 08047238
Filed: April 13,1993
Attorney Docket No. A931

:
:DECISION GRANTING PETITION
:UNDER 37 CFR 1.378(c)
:

This is a decision on the electronic petition, filed July 20,2010 ,under 37 CFR 1.378(c) to accept the unintentionally delayed payment of the 7.5 year maintenance fee for the above-identified patent.

The petition is **GRANTED**.

The maintenance fee is accepted, and the above-identified patent reinstated as of July 20,2010 .
This decision also constitutes notice that the fee has been accepted. An electronic copy of the petition and this decision has been created as an entry in the Image File Wrapper. Nevertheless, petitioner should print and retain an independent copy.

Telephone inquiries related to this electronic decision should be directed to the Electronic Business Center at 1-866-217-9197.

PTO/SB/66 (03-09)
Approved for use through 03/31/2012. OMB 0651-0016
U.S. Patent and Trademark Office: U.S. DEPARTMENT OF COMMERCE
Under the Paperwork Reduction Act of 1995, no persons are required to respond to a collection of information unless it displays valid OMB control number.

PETITION TO ACCEPT UNINTENTIONALLY DELAYED PAYMENT OF MAINTENANCE FEE IN AN EXPIRED PATENT (37 CFR 1.378(c))

Patent Number	Issue Date (YYYY-MM-DD)	Application Number	Filing Date (YYYY-MM-DD)	Docket Number (if applicable)
5,543,778	1996-08-06	08/049,464	1993-04-19	8002A-0 (5543778)

CAUTION: Maintenance fee (and surcharge, if any) payment must correctly identify: (1) the patent number and (2) the application number of the actual U.S. application leading to issuance of that patent to ensure the fee(s) is/are associated with the correct patent. 37 CFR 1.366(c) and (d).

SMALL ENTITY
☐ Patentee claims, or has previously claimed, small entity status. See 37 CFR 1.27.

LOSS OF ENTITLEMENT TO SMALL ENTITY STATUS
☒ Patentee is no longer entitled to small entity status. See 37 CFR 1.27(g)

NOT Small Entity		Small Entity	
Fee	Code	Fee	Code
○ 3 ½ year	(1551)	○ 3 ½ year	(2551)
○ 7 ½ year	(1552)	○ 7 ½ year	(2552)
◉ 11 ½ year	(1553)	○ 11 ½ year	(2553)

SURCHARGE
The surcharge required by 37 CFR 1.20(i)(2) (Fee Code 1558) must be paid as a condition of accepting unintentionally delayed payment of the maintenance fee.

MAINTENANCE FEE (37 CFR 1.20(e)-(g))
The appropriate maintenance fee must be submitted with this petition.

STATEMENT
THE UNDERSIGNED CERTIFIES THAT THE DELAY IN PAYMENT OF THE MAINTENANCE FEE TO THIS PATENT WAS UNINTENTIONAL

PETITIONER(S) REQUEST THAT THE DELAYED PAYMENT OF THE MAINTENANCE FEE BE ACCEPTED AND THE PATENT REINSTATED

THIS PORTION MUST BE COMPLETED BY THE SIGNATORY OR SIGNATORIES

37 CFR 1.378(d) states: "Any petition under this section must be signed by an attorney or agent registered to practice before the Patent and Trademark Office, or by the patentee, the assignee, or other party in interest."

I certify, in accordance with 37 CFR 1.4(d)(4) that I am

◉ An attorney or agent registered to practice before the Patent and Trademark Office

○ A sole patentee

○ A joint patentee; I certify that I am authorized to sign this submission on behalf of all the other patentees.

○ A joint patentee; all of whom are signing this e-petition

○ The assignee of record of the entire interest

Patent Practitioner			
A signature of the applicant or representative is required in accordance with 37 CFR 1.33 and 10.18. Please see 37 CFR 1.4(d) for the form of the signature			
Signature	/Richard D. Ratchford Jr./	Date (YYYY-MM-DD)	2009-05-22
Name	Richard D. Ratchford Jr.	Registration Number	53865

This collection of information is required by 37 CFR 1.378(c). The information is required to obtain or retain a benefit by the public which is to file (and by the USPTO to process) an application. Confidentiality is governed by 35 U.S.C. 122 and 37 CFR 1.11 and 1.14. This collection is estimated to take 1 hour to complete, including gathering, preparing, and submitting the completed application form to the USPTO. Time will vary depending upon the individual case. Any comments on the amount of time you require to complete this form and/or suggestions for reducing this burden, should be sent to the Chief Information Officer, U.S. Patent and Trademark Office, U.S. Department of Commerce, P.O. Box 1450, Alexandria, VA 22313-1450. DO NOT SEND FEES OR COMPLETED FORMS TO THIS ADDRESS. **This form can only be used when in conjunction with EFS-Web. If this form is mailed to the USPTO, it may cause delays in reinstating the patent.**

Privacy Act Statement

The Privacy Act of 1974 (P.L. 93-579) requires that you be given certain information in connection with your submission of the attached form related to a patent application or patent. Accordingly, pursuant to the requirements of the Act, please be advised that: (1) the general authority for the collection of this information is 35 U.S.C. 2(b)(2); (2) furnishing of the information solicited is voluntary; and (3) the principal purpose for which the information is used by the U.S. Patent and Trademark Office is to process and/or examine your submission related to a patent application or patent. If you do not furnish the requested information, the U.S. Patent and Trademark Office may not be able to process and/or examine your submission, which may result in termination of proceedings or abandonment of the application or expiration of the patent.

The information provided by you in this form will be subject to the following routine uses:

1. The information on this form will be treated confidentially to the extent allowed under the Freedom of Information Act (5 U.S.C. 552) and the Privacy Act (5 U.S.C. 552a). Records from this system of records may be disclosed to the Department of Justice to determine whether the Freedom of Information Act requires disclosure of these records.

2. A record from this system of records may be disclosed, as a routine use, in the course of presenting evidence to a court, magistrate, or administrative tribunal, including disclosures to opposing counsel in the course of settlement negotiations.

3. A record in this system of records may be disclosed, as a routine use, to a Member of Congress submitting a request involving an individual, to whom the record pertains, when the individual has requested assistance from the Member with respect to the subject matter of the record.

4. A record in this system of records may be disclosed, as a routine use, to a contractor of the Agency having need for the information in order to perform a contract. Recipients of information shall be required to comply with the requirements of the Privacy Act of 1974, as amended, pursuant to 5 U.S.C. 552a(m).

5. A record related to an International Application filed under the Patent Cooperation Treaty in this system of records may be disclosed, as a routine use, to the International Bureau of the World Intellectual Property Organization, pursuant to the Patent Cooperation Treaty.

6. A record in this system of records may be disclosed, as a routine use, to another federal agency for purposes of National Security review (35 U.S.C. 181) and for review pursuant to the Atomic Energy Act (42 U.S.C. 218(c)).

7. A record from this system of records may be disclosed, as a routine use, to the Administrator, General Services, or his/her designee, during an inspection of records conducted by GSA as part of that agency's responsibility to recommend improvements in records management practices and programs, under authority of 44 U.S.C. 2904 and 2906. Such disclosure shall be made in accordance with the GSA regulations governing inspection of records for this purpose, and any other relevant (i.e., GSA or Commerce) directive. Such disclosure shall not be used to make determinations about individuals.

8. A record from this system of records may be disclosed, as a routine use, to the public after either publication of the application pursuant to 35 U.S.C. 122(b) or issuance of a patent pursuant to 35 U.S.C. 151. Further, a record may be disclosed, subject to the limitations of 37 CFR 1.14, as a routine use, to the public if the record was filed in an application which became abandoned or in which the proceedings were terminated and which application is referenced by either a published application, an application open to public inspections or an issued patent.

9. A record from this system of records may be disclosed, as a routine use, to a Federal, State, or local law enforcement agency, if the USPTO becomes aware of a violation or potential violation of law or regulation.

UNITED STATES PATENT AND TRADEMARK OFFICE

Commissioner for Patents
United States Patent and Trademark Office
P.O. Box 1450
Alexandria, VA 22313-1450
www.uspto.gov

In re Patent No. 5543778
Issue Date: August 6,1996
Application No. 08049464
Filed: April 19,1993
Attorney Docket No. 64.234-002

:DECISION GRANTING PETITION
:UNDER 37 CFR 1.378(c)

This is a decision on the electronic petition, filed May 22,2009 ,under 37 CFR 1.378(c) to accept the unintentionally delayed payment of the 11.5 year maintenance fee for the above-identified patent.

The petition is **GRANTED**.

The maintenance fee is accepted, and the above-identified patent reinstated as of May 22,2009 .
This decision also constitutes notice that the fee has been accepted. An electronic copy of the petition and this decision has been created as an entry in the Image File Wrapper. Nevertheless, petitioner should print and retain an independent copy.

Telephone inquiries related to this electronic decision should be directed to the Electronic Business Center at 1-866-217-9197.

Under the Paperwork Reduction Act of 1995, no persons are required to respond to a collection of information unless it displays valid OMB control number.

PETITION TO ACCEPT UNINTENTIONALLY DELAYED PAYMENT OF MAINTENANCE FEE IN AN EXPIRED PATENT (37 CFR 1.378(c))

Patent Number	Issue Date (YYYY-MM-DD)	Application Number	Filing Date (YYYY-MM-DD)	Docket Number (if applicable)
5,392,950	1995-02-28	08/049,812	1993-04-20	046223/330921

CAUTION: Maintenance fee (and surcharge, if any) payment must correctly identify: (1) the patent number and (2) the application number of the actual U.S. application leading to issuance of that patent to ensure the fee(s) is/are associated with the correct patent. 37 CFR 1.366(c) and (d).

SMALL ENTITY
☐ Patentee claims, or has previously claimed, small entity status. See 37 CFR 1.27.

LOSS OF ENTITLEMENT TO SMALL ENTITY STATUS
☐ Patentee is no longer entitled to small entity status. See 37 CFR 1.27(g)

NOT Small Entity		Small Entity	
Fee	Code	Fee	Code
○ 3 ½ year	(1551)	○ 3 ½ year	(2551)
○ 7 ½ year	(1552)	○ 7 ½ year	(2552)
◉ 11 ½ year	(1553)	○ 11 ½ year	(2553)

SURCHARGE
The surcharge required by 37 CFR 1.20(i)(2) (Fee Code 1558) must be paid as a condition of accepting unintentionally delayed payment of the maintenance fee.

MAINTENANCE FEE (37 CFR 1.20(e)-(g))
The appropriate maintenance fee must be submitted with this petition.

STATEMENT
THE UNDERSIGNED CERTIFIES THAT THE DELAY IN PAYMENT OF THE MAINTENANCE FEE TO THIS PATENT WAS UNINTENTIONAL

PETITIONER(S) REQUEST THAT THE DELAYED PAYMENT OF THE MAINTENANCE FEE BE ACCEPTED AND THE PATENT REINSTATED

THIS PORTION MUST BE COMPLETED BY THE SIGNATORY OR SIGNATORIES

37 CFR 1.378(d) states: "Any petition under this section must be signed by an attorney or agent registered to practice before the Patent and Trademark Office, or by the patentee, the assignee, or other party in interest."

I certify, in accordance with 37 CFR 1.4(d)(4) that I am

◉ An attorney or agent registered to practice before the Patent and Trademark Office

○ A sole patentee

○ A joint patentee; I certify that I am authorized to sign this submission on behalf of all the other patentees.

○ A joint patentee; all of whom are signing this e-petition

○ The assignee of record of the entire interest

Patent Practitioner			
A signature of the applicant or representative is required in accordance with 37 CFR 1.33 and 10.18. Please see 37 CFR 1.4(d) for the form of the signature			
Signature	/Scott E. Brient/	Date (YYYY-MM-DD)	2008-09-03
Name	Scott E. Brient	Registration Number	44561

This collection of information is required by 37 CFR 1.378(c). The information is required to obtain or retain a benefit by the public which is to file (and by the USPTO to process) an application. Confidentiality is governed by 35 U.S.C. 122 and 37 CFR 1.11 and 1.14. This collection is estimated to take 1 hour to complete, including gathering, preparing, and submitting the completed application form to the USPTO. Time will vary depending upon the individual case. Any comments on the amount of time you require to complete this form and/ or suggestions for reducing this burden, should be sent to the Chief Information Officer, U.S. Patent and Trademark Office, U.S. Department of Commerce, P.O. Box 1450, Alexandria, VA 22313-1450. DO NOT SEND FEES OR COMPLETED FORMS TO THIS ADDRESS. **This form can only be used when in conjunction with EFS-Web. If this form is mailed to the USPTO, it may cause delays in reinstating the patent.**

Privacy Act Statement

The Privacy Act of 1974 (P.L. 93-579) requires that you be given certain information in connection with your submission of the attached form related to a patent application or patent. Accordingly, pursuant to the requirements of the Act, please be advised that: (1) the general authority for the collection of this information is 35 U.S.C. 2(b)(2); (2) furnishing of the information solicited is voluntary; and (3) the principal purpose for which the information is used by the U.S. Patent and Trademark Office is to process and/or examine your submission related to a patent application or patent. If you do not furnish the requested information, the U.S. Patent and Trademark Office may not be able to process and/or examine your submission, which may result in termination of proceedings or abandonment of the application or expiration of the patent.

The information provided by you in this form will be subject to the following routine uses:

1. The information on this form will be treated confidentially to the extent allowed under the Freedom of Information Act (5 U.S.C. 552) and the Privacy Act (5 U.S.C. 552a). Records from this system of records may be disclosed to the Department of Justice to determine whether the Freedom of Information Act requires disclosure of these record s.

2. A record from this system of records may be disclosed, as a routine use, in the course of presenting evidence to a court, magistrate, or administrative tribunal, including disclosures to opposing counsel in the course of settlement negotiations.

3. A record in this system of records may be disclosed, as a routine use, to a Member of Congress submitting a request involving an individual, to whom the record pertains, when the individual has requested assistance from the Member with respect to the subject matter of the record.

4. A record in this system of records may be disclosed, as a routine use, to a contractor of the Agency having need for the information in order to perform a contract. Recipients of information shall be required to comply with the requirements of the Privacy Act of 1974, as amended, pursuant to 5 U.S.C. 552a(m).

5. A record related to an International Application filed under the Patent Cooperation Treaty in this system of records may be disclosed, as a routine use, to the International Bureau of the World Intellectual Property Organization, pursuant to the Patent Cooperation Treaty.

6. A record in this system of records may be disclosed, as a routine use, to another federal agency for purposes of National Security review (35 U.S.C. 181) and for review pursuant to the Atomic Energy Act (42 U.S.C. 218(c)).

7. A record from this system of records may be disclosed, as a routine use, to the Administrator, General Services, or his/her designee, during an inspection of records conducted by GSA as part of that agency's responsibility to recommend improvements in records management practices and programs, under authority of 44 U.S.C. 2904 and 2906. Such disclosure shall be made in accordance with the GSA regulations governing inspection of records for this purpose, and any other relevant (i.e., GSA or Commerce) directive. Such disclosure shall not be used to make determinations about individuals.

8. A record from this system of records may be disclosed, as a routine use, to the public after either publication of the application pursuant to 35 U.S.C. 122(b) or issuance of a patent pursuant to 35 U.S.C. 151. Further, a record may be disclosed, subject to the limitations of 37 CFR 1.14, as a routine use, to the public if the record was filed in an application which became abandoned or in which the proceedings were terminated and which application is referenced by either a published application, an application open to public inspections or an issued patent.

9. A record from this system of records may be disclosed, as a routine use, to a Federal, State, or local law enforcement agency, if the USPTO becomes aware of a violation or potential violation of law or regulation.

UNITED STATES PATENT AND TRADEMARK OFFICE

Commissioner for Patents
United States Patent and Trademark Office
P.O. Box 1450
Alexandria, VA 22313-1450
www.uspto.gov

In re Patent No. 5392950
Issue Date: February 28,1995
Application No. 08049812
Filed: April 20,1993
Attorney Docket No. C3T-116

:
:DECISION GRANTING PETITION
:UNDER 37 CFR 1.378(c)
:

This is a decision on the electronic petition, filed September 3,2008 ,under 37 CFR 1.378(c) to accept the unintentionally delayed payment of the 11.5 year maintenance fee for the above-identified patent.

The petition is **GRANTED**.

The maintenance fee is accepted, and the above-identified patent reinstated as of September 3,2008 . This decision also constitutes notice that the fee has been accepted. An electronic copy of the petition and this decision has been created as an entry in the Image File Wrapper. Nevertheless, petitioner should print and retain an independent copy.

Telephone inquiries related to this electronic decision should be directed to the Electronic Business Center at 1-866-217-9197.

UNITED STATES PATENT AND TRADEMARK OFFICE

Commissioner for Patents
United States Patent and Trademark Office
P.O. Box 1450
Alexandria, VA 22313-1450
www.uspto.gov

SF BAY AREA PATENTS LLC
ATTN: ANDREW V SMITH PHD
601 VAN NESS AVENUE #1108
SAN FRANCISCO CA 94102

COPY MAILED

APR 15 2009

OFFICE OF PETITIONS

In re Patent No. 5,984,916	:	
Issue Date: November 16, 1999	:	
Application No. 08/051,033	:	DECISION ON PETITION
Filed: April 20, 1993	:	
Attorney Docket No. DL-06-02CON	:	

This is a decision on the petition under 37 CFR 1.377, filed March 12, 2009

The petition is **GRANTED**.

The above-identified patent issued on November 16, 1999. Therefore, the window for paying the second maintenance fee extended from November 16, 2006 to May 16, 2007 without surcharge, and from May 17, 2007 to November 16, 2007 with surcharge. No maintenance fee having been received in the above patent, the patent expired on May 17, 2007.

37 CFR 1.377 states, in pertinent part, that a "patentee who is dissatisfied with the refusal of the Patent and Trademark Office to accept and record a maintenance fee which was filed prior to the expiration of the patent may petition the Commissioner to accept and record the maintenance fee."[1] The petition "must be filed within 2 months of the action complained of", and must accompanied by a $200 fee. However, the petition may include a request that the fee be refunded if the refusal to accept and

[1] 37 CFR 1.377(a).

record the maintenance fee is determined to have resulted from an error by the Patent and Trademark Office.[2]

Petitioner explains that the second maintenance fee (small entity) in the amount of $1,150, was timely paid on January 19, 2007. However, petitioner states that the fee was not entered and was refunded, because the Office erroneously entered a loss of entitlement to small entity status, which petitioner explains was never filed.

Petitioner's arguments have been considered and found to be persuasive. No loss of entitlement to small entity status document could be found in the file. Moreover, the Maintenance Fee Statement, mailed by the Office on February 28, 2007, in which the Office acknowledged receipt of the second maintenance fee, indicated that as of that date, the patent was claiming small entity status.

Petitioner also states that the $1,150 maintenance fee need not be paid with the petition, as it was never refunded by the Office. In support thereof, petitioner has included a copy of a credit cart statement for July of 2007, for account ending in the digits -8593. However, Office records indicates that the $1,150 maintenance fee was refunded to the account ending in digits -4599 on July 13, 2007.

As such, the $1,150 fee for the second maintenance fee has now been charged to Deposit Account No. 50-4425, as authorized.

Given the basis for granting this petition, the $200 petition fee has been refunded to Deposit Account No. 50-4425.

In view of the above, the petition is granted and the above identified patent is hereby reinstated as if it never expired.

Telephone inquiries concerning this matter may be directed to the undersigned at (571)272-3207.

Cliff Congo
Petitions Attorney
Office of Petitions

---

[2] See 37 CFR 1.377(b).

SPE RESPONSE FOR CERTIFICATE OF CORRECTION

Paper No.: 30

DATE : June 4, 2008

TO SPE OF : ART UNIT 1614

SUBJECT : Request for Certificate of Correction on Patent No.: 5,719,119 /08/053291

A response is requested with respect to the accompanying request for a certificate of correction.

Please complete this form and return with file, within **7** days to:
Palm location **7580, Certificates of Correction Branch – South Tower – 9A22**
If response is for an IFW, **return to employee (named below) via PUBSCofC Team in MADRAS.**
With respect to the change(s) requested, correcting Office and/or Applicant's errors, should the patent read as shown in the certificate of correction (COCIN)? No new matter should be introduced, nor should the scope or meaning of the claims be changed.

Magdalene Talley

Thank You For Your Assistance

Certificates of Correction Branch
Tel. No. 703-308-9390 ext. 116

The request for issuing the above-identified correction(s) is hereby:
Note your decision on the appropriate box.

- ☒ **Approved** — **All** changes apply.
- ☐ **Approved in Part** — Specify below which changes **do not** apply.
- ☐ **Denied** — State the reasons for denial below.

Comments:

Kevin T. Weddington
Primary Examiner
Art Unit 1614

ARDIN H. MARSCHEL
SUPERVISORY PATENT EXAMINER
SPE

1614
Art Unit

UNITED STATES PATENT AND TRADEMARK OFFICE

CERTIFICATE OF CORRECTION

PATENT NO. : 5,719,119
APPLICATION NO. : 08/053291
DATED : February 17, 1998
INVENTOR(S) : Richard L. Veech

It is certified that error appears in the above-identified patent and that said Letters Patent is hereby corrected as shown below:

COLUMN 24

Line 9, change "compound" to --composition--.

Signed and Sealed this

Eighth Day of July, 2008

JON W. DUDAS
Director of the United States Patent and Trademark Office

UNITED STATES PATENT AND TRADEMARK OFFICE

Commissioner for Patents
United States Patent and Trademark Office
P.O. Box 1450
Alexandria, VA 22313-1450
www.uspto.gov

NOV 30 2009

Dechert LLP
c/o Ann M. Caviani Pease
2440 W. El Camino Real, Suite 700
Mountain View CA 94040-1499

In Re: Patent Term Extension
Application for
U.S. Patent No. 5,407,914

Dear Ms. Pease:

An order granting interim extension under 35 U.S.C. § 156(d)(5) is enclosed extending the term of U.S. Patent No. 5,407,914 for a period of 1 year. A copy of the Federal Register notice, published on November 20, 2009 at 74 Fed. Reg. 60240, regarding the issuance of the interim extension under 35 U.S.C. § 156(d)(5) is also enclosed. While a courtesy copy of this letter is being sent to the Food and Drug Administration (FDA), you should directly correspond with the FDA regarding any required changes to the patent expiration dates which are pertinent to any filings before the FDA.

Inquiries regarding this communication should be directed to the undersigned by telephone at (571) 272-7755, or by e-mail at mary.till@uspto.gov.

Mary C. Till
Legal Advisor
Office of Patent Legal Administration
Office of the Deputy Commissioner
for Patent Examination Policy

cc: Office of Regulatory Policy
Food and Drug Administration
10903 New Hampshire Ave., Bldg. 51, Rm. 6222
Silver Spring, MD 20993-0002

RE: SURFAXIN® (lucinactant)
FDA Docket No.:

Attention: Beverly Friedman

UNITED STATES PATENT AND TRADEMARK OFFICE

In re Scripps Research Institute Request for Patent Term Extension U.S. Patent No. 5,407,914	**ORDER GRANTING INTERIM EXTENSION**

On October 6, 2009, Discovery Laboratories Inc., on behalf of patent owner Scripps Research Institute, timely filed an application under 35 U.S.C. § 156(d)(5) for an interim extension of the term of U.S. Patent No. 5,407,914. The patent claims the human drug product SURFAXIN® (lucinactant). The application indicates that a New Drug Application for the human drug product SURFAXIN® (lucinactant), having active ingredients, sinapultide, colfosceril palmitate, palmitoyloleylphosphatidyl glycerol sodium salt and palmitic acid, has been filed and is currently undergoing regulatory review before the Food and Drug Administration for permission to market or use the product commercially.

Review of the application indicates that except for permission to market or use the product commercially, the subject patent would be eligible for an extension of the patent term under 35 U.S.C. § 156, and that the patent should be extended for one year as required by 35 U.S.C. § 156(d)(5)(B). Because it is apparent that the regulatory review period will continue beyond the expiration date of the patent, November 17, 2009, interim extension of the patent term under 35 U.S.C. § 156(d)(5) is appropriate.

An interim extension under 35 U.S.C. § 156(d)(5) of the term of U.S. Patent No. 5,407,914 is granted for a period of one year from the expiration date of the patent, i.e., until November 17, 2010

11/16/09
Date

David J. Kappos
Under Secretary of Commerce for Intellectual Property and
Director of the United States Patent and Trademark Office

UNITED STATES PATENT AND TRADEMARK OFFICE

Commissioner for Patents
United States Patent and Trademark Office
P.O. Box 1450
Alexandria, VA 22313-1450
www.uspto.gov

OLE K. NILSSEN
SUITE 103
200 N. HARRISON ST.
ALGONQUIN IL 60102

COPY MAILED

MAR 0 1 2006

OFFICE OF PETITIONS

ON PETITION

In re Patent No.: 5,416,386 :
Issued: May 16, 1995 :
Application No. 08/063,075 :
Filed: May 10, 1993 :
Title of Invention: **ELECTRONIC BALLAST WITH CONTROLLED DC RAIL VOLTAGE** :

This is a decision regarding your request for acceptance of a fee deficiency submission under 37 CFR 1.28 filed December 5, 2005

On September 1, 1998, the Court of Appeals for the Federal Circuit held that 37 CFR 1.28(c) is the sole provision governing the time for correction of the erroneous payment of the issue fee as a small entity. See DH Technology v. Synergystex International, Inc.. 154 F.33d 1333, 47 USPQ2d 1865 (Fed. Cir. Sept. 1, 1998).

The Office no longer investigates or rejects original or reissue applications under 37 CFR 1.56. 1098 Off. Gaz. Pat. Office 502 (January 3, 1989). Therefore nothing in this Notice is intended to imply that an investigation was done.

Your fee deficiency submission under 37 CFR 1.28 is hereby accepted and the petition is **GRANTED**.

Inquiries related to this communication should be directed to the Office of Petitions Staff at (571) 272-3282.

This file is being forwarded to the Files Repository.

Patricia Faison-Ball

Patricia Faison-Ball
Senior Petitions Attorney
Office of Petitions

Under the Paperwork Reduction Act of 1995, no persons are required to respond to a collection of information unless it displays valid OMB control number.

PETITION TO ACCEPT UNINTENTIONALLY DELAYED PAYMENT OF MAINTENANCE FEE IN AN EXPIRED PATENT (37 CFR 1.378(c))

Patent Number	Issue Date (YYYY-MM-DD)	Application Number	Filing Date (YYYY-MM-DD)	Docket Number (if applicable)
5327263	1994-07-05	08063780	1993-05-20	ID 018007 -JLR

CAUTION: Maintenance fee (and surcharge, if any) payment must correctly identify: (1) the patent number and (2) the application number of the actual U.S. application leading to issuance of that patent to ensure the fee(s) is/are associated with the correct patent. 37 CFR 1.366(c) and (d).

SMALL ENTITY
☐ Patentee claims, or has previously claimed, small entity status. See 37 CFR 1.27.

LOSS OF ENTITLEMENT TO SMALL ENTITY STATUS
☐ Patentee is no longer entitled to small entity status. See 37 CFR 1.27(g)

NOT Small Entity		Small Entity	
Fee	Code	Fee	Code
○ 3 ½ year	(1551)	○ 3 ½ year	(2551)
○ 7 ½ year	(1552)	○ 7 ½ year	(2552)
◉ 11 ½ year	(1553)	○ 11 ½ year	(2553)

SURCHARGE
The surcharge required by 37 CFR 1.20(i)(2) (Fee Code 1558) must be paid as a condition of accepting unintentionally delayed payment of the maintenance fee.

MAINTENANCE FEE (37 CFR 1.20(e)-(g))
The appropriate maintenance fee must be submitted with this petition.

STATEMENT
THE UNDERSIGNED CERTIFIES THAT THE DELAY IN PAYMENT OF THE MAINTENANCE FEE TO THIS PATENT WAS UNINTENTIONAL

PETITIONER(S) REQUEST THAT THE DELAYED PAYMENT OF THE MAINTENANCE FEE BE ACCEPTED AND THE PATENT REINSTATED

THIS PORTION MUST BE COMPLETED BY THE SIGNATORY OR SIGNATORIES

37 CFR 1.378(d) states: "Any petition under this section must be signed by an attorney or agent registered to practice before the Patent and Trademark Office, or by the patentee, the assignee, or other party in interest."

I certify, in accordance with 37 CFR 1.4(d)(4) that I am

◉ An attorney or agent registered to practice before the Patent and Trademark Office

○ A sole patentee

○ A joint patentee; I certify that I am authorized to sign this submission on behalf of all the other patentees.

○ A joint patentee; all of whom are signing this e-petition

○ The assignee of record of the entire interest

Patent Practitioner			
A signature of the applicant or representative is required in accordance with 37 CFR 1.33 and 10.18. Please see 37 CFR 1.4(d) for the form of the signature			
Signature	/DJCushing/	Date (YYYY-MM-DD)	2007-03-20
Name	David J. Cushing	Registration Number	28703

This collection of information is required by 37 CFR 1.378(c). The information is required to obtain or retain a benefit by the public which is to file (and by the USPTO to process) an application. Confidentiality is governed by 35 U.S.C. 122 and 37 CFR 1.11 and 1.14. This collection is estimated to take 1 hour to complete, including gathering, preparing, and submitting the completed application form to the USPTO. Time will vary depending upon the individual case. Any comments on the amount of time you require to complete this form and/ or suggestions for reducing this burden, should be sent to the Chief Information Officer, U.S. Patent and Trademark Office, U.S. Department of Commerce, P.O. Box 1450, Alexandria, VA 22313-1450. DO NOT SEND FEES OR COMPLETED FORMS TO THIS ADDRESS. **This form can only be used when in conjunction with EFS-Web. If this form is mailed to the USPTO, it may cause delays in reinstating the patent.**

Privacy Act Statement

The Privacy Act of 1974 (P.L. 93-579) requires that you be given certain information in connection with your submission of the attached form related to a patent application or patent. Accordingly, pursuant to the requirements of the Act, please be advised that: (1) the general authority for the collection of this information is 35 U.S.C. 2(b)(2); (2) furnishing of the information solicited is voluntary; and (3) the principal purpose for which the information is used by the U.S. Patent and Trademark Office is to process and/or examine your submission related to a patent application or patent. If you do not furnish the requested information, the U.S. Patent and Trademark Office may not be able to process and/or examine your submission, which may result in termination of proceedings or abandonment of the application or expiration of the patent.

The information provided by you in this form will be subject to the following routine uses:

1. The information on this form will be treated confidentially to the extent allowed under the Freedom of Information Act (5 U.S.C. 552) and the Privacy Act (5 U.S.C. 552a). Records from this system of records may be disclosed to the Department of Justice to determine whether the Freedom of Information Act requires disclosure of these record s.

2. A record from this system of records may be disclosed, as a routine use, in the course of presenting evidence to a court, magistrate, or administrative tribunal, including disclosures to opposing counsel in the course of settlement negotiations.

3. A record in this system of records may be disclosed, as a routine use, to a Member of Congress submitting a request involving an individual, to whom the record pertains, when the individual has requested assistance from the Member with respect to the subject matter of the record.

4. A record in this system of records may be disclosed, as a routine use, to a contractor of the Agency having need for the information in order to perform a contract. Recipients of information shall be required to comply with the requirements of the Privacy Act of 1974, as amended, pursuant to 5 U.S.C. 552a(m).

5. A record related to an International Application filed under the Patent Cooperation Treaty in this system of records may be disclosed, as a routine use, to the International Bureau of the World Intellectual Property Organization, pursuant to the Patent Cooperation Treaty.

6. A record in this system of records may be disclosed, as a routine use, to another federal agency for purposes of National Security review (35 U.S.C. 181) and for review pursuant to the Atomic Energy Act (42 U.S.C. 218(c)).

7. A record from this system of records may be disclosed, as a routine use, to the Administrator, General Services, or his/her designee, during an inspection of records conducted by GSA as part of that agency's responsibility to recommend improvements in records management practices and programs, under authority of 44 U.S.C. 2904 and 2906. Such disclosure shall be made in accordance with the GSA regulations governing inspection of records for this purpose, and any other relevant (i.e., GSA or Commerce) directive. Such disclosure shall not be used to make determinations about individuals.

8. A record from this system of records may be disclosed, as a routine use, to the public after either publication of the application pursuant to 35 U.S.C. 122(b) or issuance of a patent pursuant to 35 U.S.C. 151. Further, a record may be disclosed, subject to the limitations of 37 CFR 1.14, as a routine use, to the public if the record was filed in an application which became abandoned or in which the proceedings were terminated and which application is referenced by either a published application, an application open to public inspections or an issued patent.

9. A record from this system of records may be disclosed, as a routine use, to a Federal, State, or local law enforcement agency, if the USPTO becomes aware of a violation or potential violation of law or regulation.

UNITED STATES PATENT AND TRADEMARK OFFICE

Commissioner for Patents
United States Patent and Trademark Office
P.O. Box 1450
Alexandria, VA 22313-1450
www.uspto.gov

In re Patent No. 5327263
Issue Date: July 5,1994
Application No. 08063780
Filed: May 20,1993
Attorney Docket No. 110462

:
:DECISION GRANTING PETITION
:UNDER 37 CFR 1.378(c)
:

This is a decision on the electronic petition, filed March 20,2007 ,under 37 CFR 1.378(c) to accept the unintentionally delayed payment of the 11.5 year maintenance fee for the above-identified patent.

The petition is GRANTED.

The maintenance fee is accepted, and the above-identified patent reinstated as of March 20,2007 . This decision also constitutes notice that the fee has been accepted. An electronic copy of the petition and this decision has been created as an entry in an Image File Wrapper. Nevertheless, petitioner should print and retain an independent copy

Telephone inquires related to this electronic decision should be directed to the Electronic Business Center at 1-866-217-9197.

Approved for use through 04/30/2009. OMB 0651-0016
U.S. Patent and Trademark Office: U.S. DEPARTMENT OF COMMERCE
Under the Paperwork Reduction Act of 1995, no persons are required to respond to a collection of information unless it displays valid OMB control number.

PETITION TO ACCEPT UNINTENTIONALLY DELAYED PAYMENT OF MAINTENANCE FEE IN AN EXPIRED PATENT (37 CFR 1.378(c))

Patent Number	Issue Date (YYYY-MM-DD)	Application Number	Filing Date (YYYY-MM-DD)	Docket Number (if applicable)
5553204	1996-09-03	08063958	1993-05-20	ID 040208 - JLR

CAUTION: Maintenance fee (and surcharge, if any) payment must correctly identify: (1) the patent number and (2) the application number of the actual U.S. application leading to issuance of that patent to ensure the fee(s) is/are associated with the correct patent. 37 CFR 1.366(c) and (d).

SMALL ENTITY
☐ Patentee claims, or has previously claimed, small entity status. See 37 CFR 1.27.

LOSS OF ENTITLEMENT TO SMALL ENTITY STATUS
☐ Patentee is no longer entitled to small entity status. See 37 CFR 1.27(g)

NOT Small Entity			Small Entity		
	Fee	Code		Fee	Code
○	3 ½ year	(1551)	○	3 ½ year	(2551)
○	7 ½ year	(1552)	○	7 ½ year	(2552)
◉	11 ½ year	(1553)	○	11 ½ year	(2553)

SURCHARGE
The surcharge required by 37 CFR 1.20(i)(2) (Fee Code 1558) must be paid as a condition of accepting unintentionally delayed payment of the maintenance fee.

MAINTENANCE FEE (37 CFR 1.20(e)-(g))
The appropriate maintenance fee must be submitted with this petition.

STATEMENT
THE UNDERSIGNED CERTIFIES THAT THE DELAY IN PAYMENT OF THE MAINTENANCE FEE TO THIS PATENT WAS UNINTENTIONAL

PETITIONER(S) REQUEST THAT THE DELAYED PAYMENT OF THE MAINTENANCE FEE BE ACCEPTED AND THE PATENT REINSTATED

THIS PORTION MUST BE COMPLETED BY THE SIGNATORY OR SIGNATORIES

37 CFR 1.378(d) states: "Any petition under this section must be signed by an attorney or agent registered to practice before the Patent and Trademark Office, or by the patentee, the assignee, or other party in interest."

I certify, in accordance with 37 CFR 1.4(d)(4) that I am

◉ An attorney or agent registered to practice before the Patent and Trademark Office

○ A sole patentee

○ A joint patentee; I certify that I am authorized to sign this submission on behalf of all the other patentees.

○ A joint patentee; all of whom are signing this e-petition

○ The assignee of record of the entire interest

Patent Practitioner			
A signature of the applicant or representative is required in accordance with 37 CFR 1.33 and 10.18. Please see 37 CFR 1.4(d) for the form of the signature			
Signature	/DJCushing/	Date (YYYY-MM-DD)	2008-11-25
Name	David J. Cushing	Registration Number	28703

This collection of information is required by 37 CFR 1.378(c). The information is required to obtain or retain a benefit by the public which is to file (and by the USPTO to process) an application. Confidentiality is governed by 35 U.S.C. 122 and 37 CFR 1.11 and 1.14. This collection is estimated to take 1 hour to complete, including gathering, preparing, and submitting the completed application form to the USPTO. Time will vary depending upon the individual case. Any comments on the amount of time you require to complete this form and/ or suggestions for reducing this burden, should be sent to the Chief Information Officer, U.S. Patent and Trademark Office, U.S. Department of Commerce, P.O. Box 1450, Alexandria, VA 22313-1450. DO NOT SEND FEES OR COMPLETED FORMS TO THIS ADDRESS. **This form can only be used when in conjunction with EFS-Web. If this form is mailed to the USPTO, it may cause delays in reinstating the patent.**

Privacy Act Statement

The Privacy Act of 1974 (P.L. 93-579) requires that you be given certain information in connection with your submission of the attached form related to a patent application or patent. Accordingly, pursuant to the requirements of the Act, please be advised that: (1) the general authority for the collection of this information is 35 U.S.C. 2(b)(2); (2) furnishing of the information solicited is voluntary; and (3) the principal purpose for which the information is used by the U.S. Patent and Trademark Office is to process and/or examine your submission related to a patent application or patent. If you do not furnish the requested information, the U.S. Patent and Trademark Office may not be able to process and/or examine your submission, which may result in termination of proceedings or abandonment of the application or expiration of the patent.

The information provided by you in this form will be subject to the following routine uses:

1. The information on this form will be treated confidentially to the extent allowed under the Freedom of Information Act (5 U.S.C. 552) and the Privacy Act (5 U.S.C. 552a). Records from this system of records may be disclosed to the Department of Justice to determine whether the Freedom of Information Act requires disclosure of these record s.

2. A record from this system of records may be disclosed, as a routine use, in the course of presenting evidence to a court, magistrate, or administrative tribunal, including disclosures to opposing counsel in the course of settlement negotiations.

3. A record in this system of records may be disclosed, as a routine use, to a Member of Congress submitting a request involving an individual, to whom the record pertains, when the individual has requested assistance from the Member with respect to the subject matter of the record.

4. A record in this system of records may be disclosed, as a routine use, to a contractor of the Agency having need for the information in order to perform a contract. Recipients of information shall be required to comply with the requirements of the Privacy Act of 1974, as amended, pursuant to 5 U.S.C. 552a(m).

5. A record related to an International Application filed under the Patent Cooperation Treaty in this system of records may be disclosed, as a routine use, to the International Bureau of the World Intellectual Property Organization, pursuant to the Patent Cooperation Treaty.

6. A record in this system of records may be disclosed, as a routine use, to another federal agency for purposes of National Security review (35 U.S.C. 181) and for review pursuant to the Atomic Energy Act (42 U.S.C. 218(c)).

7. A record from this system of records may be disclosed, as a routine use, to the Administrator, General Services, or his/her designee, during an inspection of records conducted by GSA as part of that agency's responsibility to recommend improvements in records management practices and programs, under authority of 44 U.S.C. 2904 and 2906. Such disclosure shall be made in accordance with the GSA regulations governing inspection of records for this purpose, and any other relevant (i.e., GSA or Commerce) directive. Such disclosure shall not be used to make determinations about individuals.

8. A record from this system of records may be disclosed, as a routine use, to the public after either publication of the application pursuant to 35 U.S.C. 122(b) or issuance of a patent pursuant to 35 U.S.C. 151. Further, a record may be disclosed, subject to the limitations of 37 CFR 1.14, as a routine use, to the public if the record was filed in an application which became abandoned or in which the proceedings were terminated and which application is referenced by either a published application, an application open to public inspections or an issued patent.

9. A record from this system of records may be disclosed, as a routine use, to a Federal, State, or local law enforcement agency, if the USPTO becomes aware of a violation or potential violation of law or regulation.

UNITED STATES PATENT AND TRADEMARK OFFICE

Commissioner for Patents
United States Patent and Trademark Office
P.O. Box 1450
Alexandria, VA 22313-1450
www.uspto.gov

In re Patent No. 5553204
Issue Date: September 3,1996
Application No. 08063958
Filed: May 20,1993
Attorney Docket No. 522.1951HJS

:
:DECISION GRANTING PETITION
:UNDER 37 CFR 1.378(c)
:

This is a decision on the electronic petition, filed November 26,2008 ,under 37 CFR 1.378(c) to accept the unintentionally delayed payment of the 11.5 year maintenance fee for the above-identified patent.

The petition is **GRANTED**.

The maintenance fee is accepted, and the above-identified patent reinstated as of November 26,2008 . This decision also constitutes notice that the fee has been accepted. An electronic copy of the petition and this decision has been created as an entry in the Image File Wrapper. Nevertheless, petitioner should print and retain an independent copy.

Telephone inquiries related to this electronic decision should be directed to the Electronic Business Center at 1-866-217-9197.

Approved for use through 04/30/2009. OMB 0651-0016
U.S. Patent and Trademark Office: U.S. DEPARTMENT OF COMMERCE
Under the Paperwork Reduction Act of 1995, no persons are required to respond to a collection of information unless it displays valid OMB control number.

PETITION TO ACCEPT UNINTENTIONALLY DELAYED PAYMENT OF MAINTENANCE FEE IN AN EXPIRED PATENT (37 CFR 1.378(c))

Patent Number	Issue Date (YYYY-MM-DD)	Application Number	Filing Date (YYYY-MM-DD)	Docket Number (if applicable)
5487982	1996-01-30	08065612	1993-05-21	92-244-US

CAUTION: Maintenance fee (and surcharge, if any) payment must correctly identify: (1) the patent number and (2) the application number of the actual U.S. application leading to issuance of that patent to ensure the fee(s) is/are associated with the correct patent. 37 CFR 1.366(c) and (d).

SMALL ENTITY
☒ Patentee claims, or has previously claimed, small entity status. See 37 CFR 1.27.

LOSS OF ENTITLEMENT TO SMALL ENTITY STATUS
☐ Patentee is no longer entitled to small entity status. See 37 CFR 1.27(g)

NOT Small Entity			Small Entity		
	Fee	Code		Fee	Code
○	3 ½ year	(1551)	○	3 ½ year	(2551)
○	7 ½ year	(1552)	○	7 ½ year	(2552)
○	11 ½ year	(1553)	◉	11 ½ year	(2553)

SURCHARGE
The surcharge required by 37 CFR 1.20(i)(2) (Fee Code 1558) must be paid as a condition of accepting unintentionally delayed payment of the maintenance fee.

MAINTENANCE FEE (37 CFR 1.20(e)-(g))
The appropriate maintenance fee must be submitted with this petition.

STATEMENT
THE UNDERSIGNED CERTIFIES THAT THE DELAY IN PAYMENT OF THE MAINTENANCE FEE TO THIS PATENT WAS UNINTENTIONAL

PETITIONER(S) REQUEST THAT THE DELAYED PAYMENT OF THE MAINTENANCE FEE BE ACCEPTED AND THE PATENT REINSTATED

THIS PORTION MUST BE COMPLETED BY THE SIGNATORY OR SIGNATORIES

37 CFR 1.378(d) states: "Any petition under this section must be signed by an attorney or agent registered to practice before the Patent and Trademark Office, or by the patentee, the assignee, or other party in interest."

I certify, in accordance with 37 CFR 1.4(d)(4) that I am

◉ An attorney or agent registered to practice before the Patent and Trademark Office

○ A sole patentee

○ A joint patentee; I certify that I am authorized to sign this submission on behalf of all the other patentees.

○ A joint patentee; all of whom are signing this e-petition

○ The assignee of record of the entire interest

Patent Practitioner			
A signature of the applicant or representative is required in accordance with 37 CFR 1.33 and 10.18. Please see 37 CFR 1.4(d) for the form of the signature			
Signature	/Frederick H. Colen/	Date (YYYY-MM-DD)	2008-03-14
Name	Frederick H. Colen	Registration Number	28061

This collection of information is required by 37 CFR 1.378(c). The information is required to obtain or retain a benefit by the public which is to file (and by the USPTO to process) an application. Confidentiality is governed by 35 U.S.C. 122 and 37 CFR 1.11 and 1.14. This collection is estimated to take 1 hour to complete, including gathering, preparing, and submitting the completed application form to the USPTO. Time will vary depending upon the individual case. Any comments on the amount of time you require to complete this form and/ or suggestions for reducing this burden, should be sent to the Chief Information Officer, U.S. Patent and Trademark Office, U.S. Department of Commerce, P.O. Box 1450, Alexandria, VA 22313-1450. DO NOT SEND FEES OR COMPLETED FORMS TO THIS ADDRESS. **This form can only be used when in conjunction with EFS-Web. If this form is mailed to the USPTO, it may cause delays in reinstating the patent.**

Privacy Act Statement

The Privacy Act of 1974 (P.L. 93-579) requires that you be given certain information in connection with your submission of the attached form related to a patent application or patent. Accordingly, pursuant to the requirements of the Act, please be advised that: (1) the general authority for the collection of this information is 35 U.S.C. 2(b)(2); (2) furnishing of the information solicited is voluntary; and (3) the principal purpose for which the information is used by the U.S. Patent and Trademark Office is to process and/or examine your submission related to a patent application or patent. If you do not furnish the requested information, the U.S. Patent and Trademark Office may not be able to process and/or examine your submission, which may result in termination of proceedings or abandonment of the application or expiration of the patent.

The information provided by you in this form will be subject to the following routine uses:

1. The information on this form will be treated confidentially to the extent allowed under the Freedom of Information Act (5 U.S.C. 552) and the Privacy Act (5 U.S.C. 552a). Records from this system of records may be disclosed to the Department of Justice to determine whether the Freedom of Information Act requires disclosure of these record s.

2. A record from this system of records may be disclosed, as a routine use, in the course of presenting evidence to a court, magistrate, or administrative tribunal, including disclosures to opposing counsel in the course of settlement negotiations.

3. A record in this system of records may be disclosed, as a routine use, to a Member of Congress submitting a request involving an individual, to whom the record pertains, when the individual has requested assistance from the Member with respect to the subject matter of the record.

4. A record in this system of records may be disclosed, as a routine use, to a contractor of the Agency having need for the information in order to perform a contract. Recipients of information shall be required to comply with the requirements of the Privacy Act of 1974, as amended, pursuant to 5 U.S.C. 552a(m).

5. A record related to an International Application filed under the Patent Cooperation Treaty in this system of records may be disclosed, as a routine use, to the International Bureau of the World Intellectual Property Organization, pursuant to the Patent Cooperation Treaty.

6. A record in this system of records may be disclosed, as a routine use, to another federal agency for purposes of National Security review (35 U.S.C. 181) and for review pursuant to the Atomic Energy Act (42 U.S.C. 218(c)).

7. A record from this system of records may be disclosed, as a routine use, to the Administrator, General Services, or his/her designee, during an inspection of records conducted by GSA as part of that agency's responsibility to recommend improvements in records management practices and programs, under authority of 44 U.S.C. 2904 and 2906. Such disclosure shall be made in accordance with the GSA regulations governing inspection of records for this purpose, and any other relevant (i.e., GSA or Commerce) directive. Such disclosure shall not be used to make determinations about individuals.

8. A record from this system of records may be disclosed, as a routine use, to the public after either publication of the application pursuant to 35 U.S.C. 122(b) or issuance of a patent pursuant to 35 U.S.C. 151. Further, a record may be disclosed, subject to the limitations of 37 CFR 1.14, as a routine use, to the public if the record was filed in an application which became abandoned or in which the proceedings were terminated and which application is referenced by either a published application, an application open to public inspections or an issued patent.

9. A record from this system of records may be disclosed, as a routine use, to a Federal, State, or local law enforcement agency, if the USPTO becomes aware of a violation or potential violation of law or regulation.

UNITED STATES PATENT AND TRADEMARK OFFICE

Commissioner for Patents
United States Patent and Trademark Office
P.O. Box 1450
Alexandria, VA 22313-1450
www.uspto.gov

In re Patent No. 5487982
Issue Date: January 30,1996
Application No. 08065612
Filed: May 21,1993
Attorney Docket No. 92244

:

:DECISION GRANTING PETITION
:UNDER 37 CFR 1.378(c)

:

This is a decision on the electronic petition, filed March 14,2008 ,under 37 CFR 1.378(c) to accept the unintentionally delayed payment of the 11.5 year maintenance fee for the above-identified patent.

The petition is GRANTED.

The maintenance fee is accepted, and the above-identified patent reinstated as of March 14,2008 . This decision also constitutes notice that the fee has been accepted. An electronic copy of the petition and this decision has been created as an entry in an Image File Wrapper. Nevertheless, petitioner should print and retain an independent copy

Telephone inquires related to this electronic decision should be directed to the Electronic Business Center at 1-866-217-9197.

Under the Paperwork Reduction Act of 1995, no persons are required to respond to a collection of information unless it displays valid OMB control number.

PETITION TO ACCEPT UNINTENTIONALLY DELAYED PAYMENT OF MAINTENANCE FEE IN AN EXPIRED PATENT (37 CFR 1.378(c))

Patent Number	Issue Date (YYYY-MM-DD)	Application Number	Filing Date (YYYY-MM-DD)	Docket Number (if applicable)
5,455,670	1995-10-03	08/068,543	1993-05-27	8127.009.US

CAUTION: Maintenance fee (and surcharge, if any) payment must correctly identify: (1) the patent number and (2) the application number of the actual U.S. application leading to issuance of that patent to ensure the fee(s) is/are associated with the correct patent. 37 CFR 1.366(c) and (d).

SMALL ENTITY
☒ Patentee claims, or has previously claimed, small entity status. See 37 CFR 1.27.

LOSS OF ENTITLEMENT TO SMALL ENTITY STATUS
☐ Patentee is no longer entitled to small entity status. See 37 CFR 1.27(g)

NOT Small Entity			Small Entity		
	Fee	Code		Fee	Code
○	3 ½ year	(1551)	○	3 ½ year	(2551)
○	7 ½ year	(1552)	○	7 ½ year	(2552)
○	11 ½ year	(1553)	◉	11 ½ year	(2553)

SURCHARGE
The surcharge required by 37 CFR 1.20(i)(2) (Fee Code 1558) must be paid as a condition of accepting unintentionally delayed payment of the maintenance fee.

MAINTENANCE FEE (37 CFR 1.20(e)-(g))
The appropriate maintenance fee must be submitted with this petition.

STATEMENT
THE UNDERSIGNED CERTIFIES THAT THE DELAY IN PAYMENT OF THE MAINTENANCE FEE TO THIS PATENT WAS UNINTENTIONAL

PETITIONER(S) REQUEST THAT THE DELAYED PAYMENT OF THE MAINTENANCE FEE BE ACCEPTED AND THE PATENT REINSTATED

THIS PORTION MUST BE COMPLETED BY THE SIGNATORY OR SIGNATORIES

37 CFR 1.378(d) states: "Any petition under this section must be signed by an attorney or agent registered to practice before the Patent and Trademark Office, or by the patentee, the assignee, or other party in interest."

I certify, in accordance with 37 CFR 1.4(d)(4) that I am

◉ An attorney or agent registered to practice before the Patent and Trademark Office

○ A sole patentee

○ A joint patentee; I certify that I am authorized to sign this submission on behalf of all the other patentees.

○ A joint patentee; all of whom are signing this e-petition

○ The assignee of record of the entire interest

Patent Practitioner			
A signature of the applicant or representative is required in accordance with 37 CFR 1.33 and 10.18. Please see 37 CFR 1.4(d) for the form of the signature			
Signature	/James Remenick/	Date (YYYY-MM-DD)	2008-12-04
Name	James Remenick	Registration Number	36902

This collection of information is required by 37 CFR 1.378(c). The information is required to obtain or retain a benefit by the public which is to file (and by the USPTO to process) an application. Confidentiality is governed by 35 U.S.C. 122 and 37 CFR 1.11 and 1.14. This collection is estimated to take 1 hour to complete, including gathering, preparing, and submitting the completed application form to the USPTO. Time will vary depending upon the individual case. Any comments on the amount of time you require to complete this form and/ or suggestions for reducing this burden, should be sent to the Chief Information Officer, U.S. Patent and Trademark Office, U.S. Department of Commerce, P.O. Box 1450, Alexandria, VA 22313-1450. DO NOT SEND FEES OR COMPLETED FORMS TO THIS ADDRESS. **This form can only be used when in conjunction with EFS-Web. If this form is mailed to the USPTO, it may cause delays in reinstating the patent.**

Privacy Act Statement

The Privacy Act of 1974 (P.L. 93-579) requires that you be given certain information in connection with your submission of the attached form related to a patent application or patent. Accordingly, pursuant to the requirements of the Act, please be advised that: (1) the general authority for the collection of this information is 35 U.S.C. 2(b)(2); (2) furnishing of the information solicited is voluntary; and (3) the principal purpose for which the information is used by the U.S. Patent and Trademark Office is to process and/or examine your submission related to a patent application or patent. If you do not furnish the requested information, the U.S. Patent and Trademark Office may not be able to process and/or examine your submission, which may result in termination of proceedings or abandonment of the application or expiration of the patent.

The information provided by you in this form will be subject to the following routine uses:

1. The information on this form will be treated confidentially to the extent allowed under the Freedom of Information Act (5 U.S.C. 552) and the Privacy Act (5 U.S.C. 552a). Records from this system of records may be disclosed to the Department of Justice to determine whether the Freedom of Information Act requires disclosure of these record s.

2. A record from this system of records may be disclosed, as a routine use, in the course of presenting evidence to a court, magistrate, or administrative tribunal, including disclosures to opposing counsel in the course of settlement negotiations.

3. A record in this system of records may be disclosed, as a routine use, to a Member of Congress submitting a request involving an individual, to whom the record pertains, when the individual has requested assistance from the Member with respect to the subject matter of the record.

4. A record in this system of records may be disclosed, as a routine use, to a contractor of the Agency having need for the information in order to perform a contract. Recipients of information shall be required to comply with the requirements of the Privacy Act of 1974, as amended, pursuant to 5 U.S.C. 552a(m).

5. A record related to an International Application filed under the Patent Cooperation Treaty in this system of records may be disclosed, as a routine use, to the International Bureau of the World Intellectual Property Organization, pursuant to the Patent Cooperation Treaty.

6. A record in this system of records may be disclosed, as a routine use, to another federal agency for purposes of National Security review (35 U.S.C. 181) and for review pursuant to the Atomic Energy Act (42 U.S.C. 218(c)).

7. A record from this system of records may be disclosed, as a routine use, to the Administrator, General Services, or his/her designee, during an inspection of records conducted by GSA as part of that agency's responsibility to recommend improvements in records management practices and programs, under authority of 44 U.S.C. 2904 and 2906. Such disclosure shall be made in accordance with the GSA regulations governing inspection of records for this purpose, and any other relevant (i.e., GSA or Commerce) directive. Such disclosure shall not be used to make determinations about individuals.

8. A record from this system of records may be disclosed, as a routine use, to the public after either publication of the application pursuant to 35 U.S.C. 122(b) or issuance of a patent pursuant to 35 U.S.C. 151. Further, a record may be disclosed, subject to the limitations of 37 CFR 1.14, as a routine use, to the public if the record was filed in an application which became abandoned or in which the proceedings were terminated and which application is referenced by either a published application, an application open to public inspections or an issued patent.

9. A record from this system of records may be disclosed, as a routine use, to a Federal, State, or local law enforcement agency, if the USPTO becomes aware of a violation or potential violation of law or regulation.

UNITED STATES PATENT AND TRADEMARK OFFICE

Commissioner for Patents
United States Patent and Trademark Office
P.O. Box 1450
Alexandria, VA 22313-1450
www.uspto.gov

In re Patent No. 5455670
Issue Date: October 3,1995
Application No. 08068543
Filed: May 27,1993
Attorney Docket No. NRAO01

:
:DECISION GRANTING PETITION
:UNDER 37 CFR 1.378(c)
:

This is a decision on the electronic petition, filed December 4,2008 ,under 37 CFR 1.378(c) to accept the unintentionally delayed payment of the 11.5 year maintenance fee for the above-identified patent.

The petition is **GRANTED**.

The maintenance fee is accepted, and the above-identified patent reinstated as of December 4,2008 . This decision also constitutes notice that the fee has been accepted. An electronic copy of the petition and this decision has been created as an entry in the Image File Wrapper. Nevertheless, petitioner should print and retain an independent copy.

Telephone inquiries related to this electronic decision should be directed to the Electronic Business Center at 1-866-217-9197.

Under the Paperwork Reduction Act of 1995, no persons are required to respond to a collection of information unless it displays valid OMB control number.

PETITION TO ACCEPT UNINTENTIONALLY DELAYED PAYMENT OF MAINTENANCE FEE IN AN EXPIRED PATENT (37 CFR 1.378(c))

Patent Number	Issue Date (YYYY-MM-DD)	Application Number	Filing Date (YYYY-MM-DD)	Docket Number (if applicable)
5,334,101	1994-08-02	08/068,544	1993-05-27	R07,0161 (30205-0008)

CAUTION: Maintenance fee (and surcharge, if any) payment must correctly identify: (1) the patent number and (2) the application number of the actual U.S. application leading to issuance of that patent to ensure the fee(s) is/are associated with the correct patent. 37 CFR 1.366(c) and (d).

SMALL ENTITY
☒ Patentee claims, or has previously claimed, small entity status. See 37 CFR 1.27.

LOSS OF ENTITLEMENT TO SMALL ENTITY STATUS
☐ Patentee is no longer entitled to small entity status. See 37 CFR 1.27(g)

NOT Small Entity			Small Entity		
	Fee	Code		Fee	Code
○	3 ½ year	(1551)	○	3 ½ year	(2551)
○	7 ½ year	(1552)	○	7 ½ year	(2552)
○	11 ½ year	(1553)	◉	11 ½ year	(2553)

SURCHARGE
The surcharge required by 37 CFR 1.20(i)(2) (Fee Code 1558) must be paid as a condition of accepting unintentionally delayed payment of the maintenance fee.

MAINTENANCE FEE (37 CFR 1.20(e)-(g))
The appropriate maintenance fee must be submitted with this petition.

STATEMENT
THE UNDERSIGNED CERTIFIES THAT THE DELAY IN PAYMENT OF THE MAINTENANCE FEE TO THIS PATENT WAS UNINTENTIONAL

PETITIONER(S) REQUEST THAT THE DELAYED PAYMENT OF THE MAINTENANCE FEE BE ACCEPTED AND THE PATENT REINSTATED

THIS PORTION MUST BE COMPLETED BY THE SIGNATORY OR SIGNATORIES

37 CFR 1.378(d) states: "Any petition under this section must be signed by an attorney or agent registered to practice before the Patent and Trademark Office, or by the patentee, the assignee, or other party in interest."

I certify, in accordance with 37 CFR 1.4(d)(4) that I am

◉ An attorney or agent registered to practice before the Patent and Trademark Office

○ A sole patentee

○ A joint patentee; I certify that I am authorized to sign this submission on behalf of all the other patentees.

○ A joint patentee; all of whom are signing this e-petition

○ The assignee of record of the entire interest

Patent Practitioner			
A signature of the applicant or representative is required in accordance with 37 CFR 1.33 and 10.18. Please see 37 CFR 1.4(d) for the form of the signature			
Signature	/Mark Bergner/	Date (YYYY-MM-DD)	2007-06-21
Name	Mark Bergner	Registration Number	45877

This collection of information is required by 37 CFR 1.378(c). The information is required to obtain or retain a benefit by the public which is to file (and by the USPTO to process) an application. Confidentiality is governed by 35 U.S.C. 122 and 37 CFR 1.11 and 1.14. This collection is estimated to take 1 hour to complete, including gathering, preparing, and submitting the completed application form to the USPTO. Time will vary depending upon the individual case. Any comments on the amount of time you require to complete this form and/ or suggestions for reducing this burden, should be sent to the Chief Information Officer, U.S. Patent and Trademark Office, U.S. Department of Commerce, P.O. Box 1450, Alexandria, VA 22313-1450. DO NOT SEND FEES OR COMPLETED FORMS TO THIS ADDRESS. **This form can only be used when in conjunction with EFS-Web. If this form is mailed to the USPTO, it may cause delays in reinstating the patent.**

Privacy Act Statement

The Privacy Act of 1974 (P.L. 93-579) requires that you be given certain information in connection with your submission of the attached form related to a patent application or patent. Accordingly, pursuant to the requirements of the Act, please be advised that: (1) the general authority for the collection of this information is 35 U.S.C. 2(b)(2); (2) furnishing of the information solicited is voluntary; and (3) the principal purpose for which the information is used by the U.S. Patent and Trademark Office is to process and/or examine your submission related to a patent application or patent. If you do not furnish the requested information, the U.S. Patent and Trademark Office may not be able to process and/or examine your submission, which may result in termination of proceedings or abandonment of the application or expiration of the patent.

The information provided by you in this form will be subject to the following routine uses:

1. The information on this form will be treated confidentially to the extent allowed under the Freedom of Information Act (5 U.S.C. 552) and the Privacy Act (5 U.S.C. 552a). Records from this system of records may be disclosed to the Department of Justice to determine whether the Freedom of Information Act requires disclosure of these record s.

2. A record from this system of records may be disclosed, as a routine use, in the course of presenting evidence to a court, magistrate, or administrative tribunal, including disclosures to opposing counsel in the course of settlement negotiations.

3. A record in this system of records may be disclosed, as a routine use, to a Member of Congress submitting a request involving an individual, to whom the record pertains, when the individual has requested assistance from the Member with respect to the subject matter of the record.

4. A record in this system of records may be disclosed, as a routine use, to a contractor of the Agency having need for the information in order to perform a contract. Recipients of information shall be required to comply with the requirements of the Privacy Act of 1974, as amended, pursuant to 5 U.S.C. 552a(m).

5. A record related to an International Application filed under the Patent Cooperation Treaty in this system of records may be disclosed, as a routine use, to the International Bureau of the World Intellectual Property Organization, pursuant to the Patent Cooperation Treaty.

6. A record in this system of records may be disclosed, as a routine use, to another federal agency for purposes of National Security review (35 U.S.C. 181) and for review pursuant to the Atomic Energy Act (42 U.S.C. 218(c)).

7. A record from this system of records may be disclosed, as a routine use, to the Administrator, General Services, or his/her designee, during an inspection of records conducted by GSA as part of that agency's responsibility to recommend improvements in records management practices and programs, under authority of 44 U.S.C. 2904 and 2906. Such disclosure shall be made in accordance with the GSA regulations governing inspection of records for this purpose, and any other relevant (i.e., GSA or Commerce) directive. Such disclosure shall not be used to make determinations about individuals.

8. A record from this system of records may be disclosed, as a routine use, to the public after either publication of the application pursuant to 35 U.S.C. 122(b) or issuance of a patent pursuant to 35 U.S.C. 151. Further, a record may be disclosed, subject to the limitations of 37 CFR 1.14, as a routine use, to the public if the record was filed in an application which became abandoned or in which the proceedings were terminated and which application is referenced by either a published application, an application open to public inspections or an issued patent.

9. A record from this system of records may be disclosed, as a routine use, to a Federal, State, or local law enforcement agency, if the USPTO becomes aware of a violation or potential violation of law or regulation.

UNITED STATES PATENT AND TRADEMARK OFFICE

Commissioner for Patents
United States Patent and Trademark Office
P.O. Box 1450
Alexandria, VA 22313-1450
www.uspto.gov

In re Patent No. 5334101
Issue Date: August 2,1994
Application No. 08068544
Filed: May 27,1993
Attorney Docket No. MCM8565

:
:DECISION GRANTING PETITION
:UNDER 37 CFR 1.378(c)
:

This is a decision on the electronic petition, filed June 21,2007 ,under 37 CFR 1.378(c) to accept the unintentionally delayed payment of the 11.5 year maintenance fee for the above-identified patent.

The petition is GRANTED.

The maintenance fee is accepted, and the above-identified patent reinstated as of June 21,2007 . This decision also constitutes notice that the fee has been accepted. An electronic copy of the petition and this decision has been created as an entry in an Image File Wrapper. Nevertheless, petitioner should print and retain an independent copy

Telephone inquires related to this electronic decision should be directed to the Electronic Business Center at 1-866-217-9197.

Under the Paperwork Reduction Act of 1995, no persons are required to respond to a collection of information unless it displays valid OMB control number.

PETITION TO ACCEPT UNINTENTIONALLY DELAYED PAYMENT OF MAINTENANCE FEE IN AN EXPIRED PATENT (37 CFR 1.378(c))

Patent Number	Issue Date (YYYY-MM-DD)	Application Number	Filing Date (YYYY-MM-DD)	Docket Number (if applicable)
5,367,925	1994-11-29	08/069,537	1993-06-01	834/014

CAUTION: Maintenance fee (and surcharge, if any) payment must correctly identify: (1) the patent number and (2) the application number of the actual U.S. application leading to issuance of that patent to ensure the fee(s) is/are associated with the correct patent. 37 CFR 1.366(c) and (d).

SMALL ENTITY
☒ Patentee claims, or has previously claimed, small entity status. See 37 CFR 1.27.

LOSS OF ENTITLEMENT TO SMALL ENTITY STATUS
☐ Patentee is no longer entitled to small entity status. See 37 CFR 1.27(g)

NOT Small Entity			Small Entity		
	Fee	Code		Fee	Code
○	3 ½ year	(1551)	○	3 ½ year	(2551)
○	7 ½ year	(1552)	○	7 ½ year	(2552)
○	11 ½ year	(1553)	◉	11 ½ year	(2553)

SURCHARGE
The surcharge required by 37 CFR 1.20(i)(2) (Fee Code 1558) must be paid as a condition of accepting unintentionally delayed payment of the maintenance fee.

MAINTENANCE FEE (37 CFR 1.20(e)-(g))
The appropriate maintenance fee must be submitted with this petition.

STATEMENT
THE UNDERSIGNED CERTIFIES THAT THE DELAY IN PAYMENT OF THE MAINTENANCE FEE TO THIS PATENT WAS UNINTENTIONAL

PETITIONER(S) REQUEST THAT THE DELAYED PAYMENT OF THE MAINTENANCE FEE BE ACCEPTED AND THE PATENT REINSTATED

THIS PORTION MUST BE COMPLETED BY THE SIGNATORY OR SIGNATORIES

37 CFR 1.378(d) states: "Any petition under this section must be signed by an attorney or agent registered to practice before the Patent and Trademark Office, or by the patentee, the assignee, or other party in interest."

I certify, in accordance with 37 CFR 1.4(d)(4) that I am

◉ An attorney or agent registered to practice before the Patent and Trademark Office

○ A sole patentee

○ A joint patentee; I certify that I am authorized to sign this submission on behalf of all the other patentees.

○ A joint patentee; all of whom are signing this e-petition

○ The assignee of record of the entire interest

Patent Practitioner			
A signature of the applicant or representative is required in accordance with 37 CFR 1.33 and 10.18. Please see 37 CFR 1.4(d) for the form of the signature			
Signature	/David S. Kashman/	Date (YYYY-MM-DD)	2008-07-16
Name	David S. Kashman	Registration Number	28725

This collection of information is required by 37 CFR 1.378(c). The information is required to obtain or retain a benefit by the public which is to file (and by the USPTO to process) an application. Confidentiality is governed by 35 U.S.C. 122 and 37 CFR 1.11 and 1.14. This collection is estimated to take 1 hour to complete, including gathering, preparing, and submitting the completed application form to the USPTO. Time will vary depending upon the individual case. Any comments on the amount of time you require to complete this form and/ or suggestions for reducing this burden, should be sent to the Chief Information Officer, U.S. Patent and Trademark Office, U.S. Department of Commerce, P.O. Box 1450, Alexandria, VA 22313-1450. DO NOT SEND FEES OR COMPLETED FORMS TO THIS ADDRESS. **This form can only be used when in conjunction with EFS-Web. If this form is mailed to the USPTO, it may cause delays in reinstating the patent.**

Privacy Act Statement

The Privacy Act of 1974 (P.L. 93-579) requires that you be given certain information in connection with your submission of the attached form related to a patent application or patent. Accordingly, pursuant to the requirements of the Act, please be advised that: (1) the general authority for the collection of this information is 35 U.S.C. 2(b)(2); (2) furnishing of the information solicited is voluntary; and (3) the principal purpose for which the information is used by the U.S. Patent and Trademark Office is to process and/or examine your submission related to a patent application or patent. If you do not furnish the requested information, the U.S. Patent and Trademark Office may not be able to process and/or examine your submission, which may result in termination of proceedings or abandonment of the application or expiration of the patent.

The information provided by you in this form will be subject to the following routine uses:

1. The information on this form will be treated confidentially to the extent allowed under the Freedom of Information Act (5 U.S.C. 552) and the Privacy Act (5 U.S.C. 552a). Records from this system of records may be disclosed to the Department of Justice to determine whether the Freedom of Information Act requires disclosure of these record s.

2. A record from this system of records may be disclosed, as a routine use, in the course of presenting evidence to a court, magistrate, or administrative tribunal, including disclosures to opposing counsel in the course of settlement negotiations.

3. A record in this system of records may be disclosed, as a routine use, to a Member of Congress submitting a request involving an individual, to whom the record pertains, when the individual has requested assistance from the Member with respect to the subject matter of the record.

4. A record in this system of records may be disclosed, as a routine use, to a contractor of the Agency having need for the information in order to perform a contract. Recipients of information shall be required to comply with the requirements of the Privacy Act of 1974, as amended, pursuant to 5 U.S.C. 552a(m).

5. A record related to an International Application filed under the Patent Cooperation Treaty in this system of records may be disclosed, as a routine use, to the International Bureau of the World Intellectual Property Organization, pursuant to the Patent Cooperation Treaty.

6. A record in this system of records may be disclosed, as a routine use, to another federal agency for purposes of National Security review (35 U.S.C. 181) and for review pursuant to the Atomic Energy Act (42 U.S.C. 218(c)).

7. A record from this system of records may be disclosed, as a routine use, to the Administrator, General Services, or his/her designee, during an inspection of records conducted by GSA as part of that agency's responsibility to recommend improvements in records management practices and programs, under authority of 44 U.S.C. 2904 and 2906. Such disclosure shall be made in accordance with the GSA regulations governing inspection of records for this purpose, and any other relevant (i.e., GSA or Commerce) directive. Such disclosure shall not be used to make determinations about individuals.

8. A record from this system of records may be disclosed, as a routine use, to the public after either publication of the application pursuant to 35 U.S.C. 122(b) or issuance of a patent pursuant to 35 U.S.C. 151. Further, a record may be disclosed, subject to the limitations of 37 CFR 1.14, as a routine use, to the public if the record was filed in an application which became abandoned or in which the proceedings were terminated and which application is referenced by either a published application, an application open to public inspections or an issued patent.

9. A record from this system of records may be disclosed, as a routine use, to a Federal, State, or local law enforcement agency, if the USPTO becomes aware of a violation or potential violation of law or regulation.

UNITED STATES PATENT AND TRADEMARK OFFICE

Commissioner for Patents
United States Patent and Trademark Office
P.O. Box 1450
Alexandria, VA 22313-1450
www.uspto.gov

In re Patent No. 5367925
Issue Date: November 29,1994
Application No. 08069537
Filed: June 1,1993
Attorney Docket No.

:

:DECISION GRANTING PETITION
:UNDER 37 CFR 1.378(c)

:

This is a decision on the electronic petition, filed July 16,2008 ,under 37 CFR 1.378(c) to accept the unintentionally delayed payment of the 11.5 year maintenance fee for the above-identified patent.

The petition is GRANTED.

The maintenance fee is accepted, and the above-identified patent reinstated as of July 16,2008 . This decision also constitutes notice that the fee has been accepted. An electronic copy of the petition and this decision has been created as an entry in an Image File Wrapper. Nevertheless, petitioner should print and retain an independent copy

Telephone inquires related to this electronic decision should be directed to the Electronic Business Center at 1-866-217-9197.

UNITED STATES PATENT AND TRADEMARK OFFICE

COMMISSIONER FOR PATENTS
UNITED STATES PATENT AND TRADEMARK OFFICE
WASHINGTON, D.C. 20231
www.uspto.gov

JJGJr.:08-00

Paper 22

COPY MAILED

SEP 01 2000

SPECIAL PROGRAMS OFFICE
DAC FOR PATENTS

DAVIS HOCKENBER WINE
BROWN KOEHN & SHORS
666 WALNUT ST./STE 2500
DES MOINES, IA 50309

In re Application of
Kreamer
Application No. 08/071,052
Filed: 4 June, 1993
Attorney Docket No. 467312465

ON PETITION

This is a decision on the petition filed herein on 13 June, 2000, under 37 C.F.R. §1.137(a),[1] and supplemented on 3 August, 2000, under 37 C.F.R. §1.137(b),[2] to revive the above-identified application.

The petition under §1.137(b) is **GRANTED**;[3] the petition under §1.137(a) is **dismissed as moot** for failing to satisfy the evidentiary burden under the rule.[4]

The record indicates that:

- the application became abandoned for failure to reply timely within the one- (1-) month shortened statutory period (SSP) to a restriction requirement mailed on 19 August, 1999, and due on or before 19 September, 1999;

---

[1] A Petition filed under the provisions of 37 C.F.R. §1.137(a) must be accompanied by:
(1) The required reply, unless previously filed. In a nonprovisional application abandoned for failure to prosecute, the required reply may be met by the filing of a continuing application. In an application for patent, abandoned or lapsed for failure to pay the issue fee or any portion thereof, the required reply must be the payment of the issue fee or any outstanding balance thereof;
(2) the petition fee required by 37 C.F.R. §1.17(l);
(3) A showing to the satisfaction of the Commissioner that the entire delay in filing the required reply from the reply due date until the filing of a grantable petition pursuant to the is paragraph was unavoidable; and
(4) Any terminal disclaimer (and fee set forth in 37 C.F.R. §1.20(d)) required pursuant to 37 C.F.R. §1.137(c).

[2] Effective December 1, 1997, the provisions of 37 C.F.R. §1.137(b) now provide that where the delay in reply was unintentional, a petition may be filed to revive an abandoned application or a lapsed patent pursuant to 37 C.F.R. §1.137(b). A grantable petition filed under the provisions of 37 C.F.R. §1.137(b) must be accompanied by:
(1) the required reply, unless previously filed. In a nonprovisional application abandoned for failure to prosecute, the required reply may be met by the filing of a continuing application. In an application or patent, abandoned or lapsed for failure to pay the issue fee or any portion thereof, the required reply must be the payment of the issue fee or any outstanding balance thereof.
(2) the petition fee as set forth in 37 C.F.R. §1.17(m);
(3) a statement that the entire delay in filing the required reply from the due date for the reply until the filing of a grantable petition pursuant to 37 C.F.R. §1.137(b) was unintentional. The Commissioner may require additional information where there is a question whether the delay was unintentional; and
(4) any terminal disclaimer (and fee set forth in 37 C.F.R. §1.20(d)) required pursuant to 37 C.F.R. §1.137(c).

[3] Petitioner authorizes charges and credits to Deposit Account 12-2250 as necessary herein, and said account is charged $605.00 for the instant petition under 37 C.F.R. §1.137(b) and credited $55.00 for the petition under 37 C.F.R. §1.137(a).

[4] An application is "unavoidably" abandoned only where Petitioner (or Petitioner's counsel) takes all action necessary for a proper response to the outstanding Office action, but through the intervention of unforeseen circumstances, the response is not timely received in the Office. That is, in the context of ordinary human affairs the test is such care as is generally used and observed by prudent and careful persons in relation to their most important business. Ex parte Pratt, 1887 Dec. Comm'r Pat. 31 (Comm'r Pat. 1887); Ex parte Henrich, 1913 Dec. Comm'r Pat. 139, 141 (Comm'r. Pat. 1913). The petition recitation (see: infra) as the basis for unavoidable delay is completely unsupported by documentary evidence and declaration(s), fails to satisfy the test set forth in Pratt, and, thus, the petition cannot be affirmatively decided under the unavoidable standard.

- the application went abandoned after midnight on 19 September, 1999;[5] and
- the Notice of Abandonment was mailed on 8 May, 2000.

The Terminal Disclaimer filed 13 June, 2000, is accepted, and the term disclaimed is eleven (11) months, which is equivalent to the period of abandonment.

The file is being sent to Technology Center 1600 for further processing.

Telephone inquiries concerning this matter may be directed to Petitions Attorney John J. Gillon, Jr, at (703) 305-9199.

Beverly M. Flanagan
Supervisory Petitions Examiner
Office of Petitions
Office of the Deputy Commissioner
for Patent Examination Policy

---

[5] As a basis for unavoidable delay under 37 C.F.R. §1.137(a), Petitioner alleges that:

On [5 November, 1999] we received an Office action with the cover sheet missing PTO-90C). The response to the action received on [5 November] was a restriction requirement and was filed via facsimile on [30 November, 1999]. Operating with the understanding that the mailing date was early November 1999, the November filing was thought to be a timely response to the Office action. However, on [12 May, 2000], we received a Notice of Abandonment stating that the response was late and without a Petition to Extend the time to Answer and the required fee. On [7 June, 2000], we learned from Examiner Criares that the actual mailing date of the Office action was [19 August, 1999]. As such the time to respond to the action had already expired by the time we received it in November.

Based on the foregoing, the entire delay in replying to the original action was unavoidable due to the unforeseen fault or imperfection of the U.S. Postal Service, or the U.S. PTO, in delivering and/or mailing the original action. All actions in response to the Office action were timely and diligent and did not lead to the abandonment.

It is notable that: (1) the cover sheet to which Petitioner refers is the only location in the Office action in which the delivery address for the paper is set forth, and, in the absence of the cover sheet, delivery (whether timely or untimely) would be unlikely; (2) extensions of time were available to, but unused by, Petitioner to obtain and assure timely response to the restriction requirement; and (3) in satisfaction of the Pratt test (see: Fn. 3, above), one pursuing a matter in a fashion concordant with the handling one's most important business affairs might be expected to contact the Examiner and/or the Examiner's supervisor immediately upon receipt of a partial paper.

UNITED STATES PATENT AND TRADEMARK OFFICE

COMMISSIONER FOR PATENTS
UNITED STATES PATENT AND TRADEMARK OFFICE
WASHINGTON, D.C. 20231
www.uspto.gov

Paper No. 35

Davis, Broun, Koehn, Shors, & Roberts, P.C.
The Financial Center
666 Walnut Street
Suite 2500
Des Moines, IA 50309-3993

COPY MAILED

FEB 28 2002

OFFICE OF PETITIONS

In re Application of:
Kreamer
Application No. 08/071,052
Filed: June 4, 1993
Attorney Docket No. 467312465

ON PETITION

This is a decision on the January 10, 2002 petition to revive the above-identified application.

This application became abandoned for failure to timely file a proper reply to the final office action mailed on May 14, 2001. A shortened statutory period of three months was set for reply. On November 14, 2001, Petitioner filed a request for a three month extension of time and proposed amendments. However, those amendments were not entered because they did not place the application in condition for allowance. Because the deadline then passed without a timely and proper reply, the application became abandoned as of the following day, November 15, 2001.[1] The USPTO mailed a notice of abandonment on December 4, 2001.

All requirements for a grantable petition under the rule have been met. Therefore, this petition is **GRANTED**.

This application is being revived solely for purposes of continuity with the Continued Prosecution Application, filed with this petition, and is again abandoned in favor of the CPA.

This application is being forwarded to Technology Center 1600 for examination.

Telephone inquiries concerning this matter may be directed to the undersigned in the Office of Petitions at (703) 306-5593.

Scott M. Ledford
Attorney
Office of Petitions
Office of the Deputy Commissioner
for Patent Examination Policy

[1] *See* 35 U.S.C. §133, 37 C.F.R. §1.134-136.

UNITED STATES PATENT AND TRADEMARK OFFICE

Commissioner for Patents
United States Patent and Trademark Office
P.O. Box 1450
Alexandria, VA 22313-1450
www.uspto.gov

DAVIS BROWN KOEHN
SHORS & ROBERTS, P.C.
666 WALNUT ST., SUITE 2500
DES MOINES, IOWA 50309

COPY MAILED
AUG 1 8 2004
OFFICE OF PETITIONS

In re Application of :
Jeffry W. Kreamer et al :
Application No. 08/071,052 :
Filed: June 4, 1993 :
Attorney Docket No. 467312465 :

ON PETITION

This is a decision on the petition under 37 CFR 1.137(b), filed May 25, 2004, to revive the above-identified application.

The petition is **GRANTED.**

The above-identified application became abandoned for failure to reply in a timely manner to the final Office action mailed May 7, 2003, which set a shortened statutory period for reply of three (3) months. No extensions of time under the provisions of 37 CFR 1.136(a) were obtained. Accordingly, the above-identified application became abandoned on August 8, 2003.

The above-identified application is being revived solely for purposes of continuity with a Request For Continued Examination (RCE) filed on May 25, 2004.

Telephone inquiries concerning this decision should be directed to Irvin Dingle at (703) 306-5684.

The application file is being forwarded to Technology Center AU 1617 for further processing.

Irvin Dingle
Petitions Examiner
Office of Petitions
Office of the Deputy Commissioner
for Patent Examination Policy

Under the Paperwork Reduction Act of 1995, no persons are required to respond to a collection of information unless it displays valid OMB control number.

PETITION TO ACCEPT UNINTENTIONALLY DELAYED PAYMENT OF MAINTENANCE FEE IN AN EXPIRED PATENT (37 CFR 1.378(c))

Patent Number	Issue Date (YYYY-MM-DD)	Application Number	Filing Date (YYYY-MM-DD)	Docket Number (if applicable)
5359734	1994-11-01	08071588	1993-06-02	

CAUTION: Maintenance fee (and surcharge, if any) payment must correctly identify: (1) the patent number and (2) the application number of the actual U.S. application leading to issuance of that patent to ensure the fee(s) is/are associated with the correct patent. 37 CFR 1.366(c) and (d).

SMALL ENTITY
☒ Patentee claims, or has previously claimed, small entity status. See 37 CFR 1.27.

LOSS OF ENTITLEMENT TO SMALL ENTITY STATUS
☐ Patentee is no longer entitled to small entity status. See 37 CFR 1.27(g)

NOT Small Entity			Small Entity		
	Fee	Code		Fee	Code
○	3 ½ year	(1551)	○	3 ½ year	(2551)
○	7 ½ year	(1552)	○	7 ½ year	(2552)
○	11 ½ year	(1553)	◉	11 ½ year	(2553)

SURCHARGE
The surcharge required by 37 CFR 1.20(i)(2) (Fee Code 1558) must be paid as a condition of accepting unintentionally delayed payment of the maintenance fee.

MAINTENANCE FEE (37 CFR 1.20(e)-(g))
The appropriate maintenance fee must be submitted with this petition.

STATEMENT
THE UNDERSIGNED CERTIFIES THAT THE DELAY IN PAYMENT OF THE MAINTENANCE FEE TO THIS PATENT WAS UNINTENTIONAL

PETITIONER(S) REQUEST THAT THE DELAYED PAYMENT OF THE MAINTENANCE FEE BE ACCEPTED AND THE PATENT REINSTATED

THIS PORTION MUST BE COMPLETED BY THE SIGNATORY OR SIGNATORIES

37 CFR 1.378(d) states: "Any petition under this section must be signed by an attorney or agent registered to practice before the Patent and Trademark Office, or by the patentee, the assignee, or other party in interest."

I certify, in accordance with 37 CFR 1.4(d)(4) that I am

○ An attorney or agent registered to practice before the Patent and Trademark Office

◉ A sole patentee

○ A joint patentee; I certify that I am authorized to sign this submission on behalf of all the other patentees.

○ A joint patentee; all of whom are signing this e-petition

○ The assignee of record of the entire interest

Sole Patentee			
A signature of the applicant or representative is required in accordance with 37 CFR 1.33 and 10.18. Please see 37 CFR 1.4(d) for the form of the signature.			
Signature	/WILLIAM H. RATHBURN/	Date (YYYY-MM-DD)	2007-04-18
Name	WILLIAM H. RATHBURN		

This collection of information is required by 37 CFR 1.378(c). The information is required to obtain or retain a benefit by the public which is to file (and by the USPTO to process) an application. Confidentiality is governed by 35 U.S.C. 122 and 37 CFR 1.11 and 1.14. This collection is estimated to take 1 hour to complete, including gathering, preparing, and submitting the completed application form to the USPTO. Time will vary depending upon the individual case. Any comments on the amount of time you require to complete this form and/ or suggestions for reducing this burden, should be sent to the Chief Information Officer, U.S. Patent and Trademark Office, U.S. Department of Commerce, P.O. Box 1450, Alexandria, VA 22313-1450. DO NOT SEND FEES OR COMPLETED FORMS TO THIS ADDRESS. **This form can only be used when in conjunction with EFS-Web. If this form is mailed to the USPTO, it may cause delays in reinstating the patent.**

Privacy Act Statement

The Privacy Act of 1974 (P.L. 93-579) requires that you be given certain information in connection with your submission of the attached form related to a patent application or patent. Accordingly, pursuant to the requirements of the Act, please be advised that: (1) the general authority for the collection of this information is 35 U.S.C. 2(b)(2); (2) furnishing of the information solicited is voluntary; and (3) the principal purpose for which the information is used by the U.S. Patent and Trademark Office is to process and/or examine your submission related to a patent application or patent. If you do not furnish the requested information, the U.S. Patent and Trademark Office may not be able to process and/or examine your submission, which may result in termination of proceedings or abandonment of the application or expiration of the patent.

The information provided by you in this form will be subject to the following routine uses:

1. The information on this form will be treated confidentially to the extent allowed under the Freedom of Information Act (5 U.S.C. 552) and the Privacy Act (5 U.S.C. 552a). Records from this system of records may be disclosed to the Department of Justice to determine whether the Freedom of Information Act requires disclosure of these record s.

2. A record from this system of records may be disclosed, as a routine use, in the course of presenting evidence to a court, magistrate, or administrative tribunal, including disclosures to opposing counsel in the course of settlement negotiations.

3. A record in this system of records may be disclosed, as a routine use, to a Member of Congress submitting a request involving an individual, to whom the record pertains, when the individual has requested assistance from the Member with respect to the subject matter of the record.

4. A record in this system of records may be disclosed, as a routine use, to a contractor of the Agency having need for the information in order to perform a contract. Recipients of information shall be required to comply with the requirements of the Privacy Act of 1974, as amended, pursuant to 5 U.S.C. 552a(m).

5. A record related to an International Application filed under the Patent Cooperation Treaty in this system of records may be disclosed, as a routine use, to the International Bureau of the World Intellectual Property Organization, pursuant to the Patent Cooperation Treaty.

6. A record in this system of records may be disclosed, as a routine use, to another federal agency for purposes of National Security review (35 U.S.C. 181) and for review pursuant to the Atomic Energy Act (42 U.S.C. 218(c)).

7. A record from this system of records may be disclosed, as a routine use, to the Administrator, General Services, or his/her designee, during an inspection of records conducted by GSA as part of that agency's responsibility to recommend improvements in records management practices and programs, under authority of 44 U.S.C. 2904 and 2906. Such disclosure shall be made in accordance with the GSA regulations governing inspection of records for this purpose, and any other relevant (i.e., GSA or Commerce) directive. Such disclosure shall not be used to make determinations about individuals.

8. A record from this system of records may be disclosed, as a routine use, to the public after either publication of the application pursuant to 35 U.S.C. 122(b) or issuance of a patent pursuant to 35 U.S.C. 151. Further, a record may be disclosed, subject to the limitations of 37 CFR 1.14, as a routine use, to the public if the record was filed in an application which became abandoned or in which the proceedings were terminated and which application is referenced by either a published application, an application open to public inspections or an issued patent.

9. A record from this system of records may be disclosed, as a routine use, to a Federal, State, or local law enforcement agency, if the USPTO becomes aware of a violation or potential violation of law or regulation.

UNITED STATES PATENT AND TRADEMARK OFFICE

Commissioner for Patents
United States Patent and Trademark Office
P.O. Box 1450
Alexandria, VA 22313-1450
www.uspto.gov

In re Patent No. 5359734
Issue Date: November 1,1994
Application No. 08071588
Filed: June 2,1993
Attorney Docket No. 1250447281

:
:DECISION GRANTING PETITION
:UNDER 37 CFR 1.378(c)
:

This is a decision on the electronic petition, filed April 18,2007 ,under 37 CFR 1.378(c) to accept the unintentionally delayed payment of the 11.5 year maintenance fee for the above-identified patent.

The petition is GRANTED.

The maintenance fee is accepted, and the above-identified patent reinstated as of April 18,2007 . This decision also constitutes notice that the fee has been accepted. An electronic copy of the petition and this decision has been created as an entry in an Image File Wrapper. Nevertheless, petitioner should print and retain an independent copy

Telephone inquires related to this electronic decision should be directed to the Electronic Business Center at 1-866-217-9197.

PTO/SB/66 (03-09)
Approved for use through 03/31/2012. OMB 0651-0016
U.S. Patent and Trademark Office: U.S. DEPARTMENT OF COMMERCE
Under the Paperwork Reduction Act of 1995, no persons are required to respond to a collection of information unless it displays valid OMB control number.

PETITION TO ACCEPT UNINTENTIONALLY DELAYED PAYMENT OF MAINTENANCE FEE IN AN EXPIRED PATENT (37 CFR 1.378(c))

Patent Number	Issue Date (YYYY-MM-DD)	Application Number	Filing Date (YYYY-MM-DD)	Docket Number (if applicable)
5,622,414	1997-04-22	08/073,124	1993-06-07	60816-5147

CAUTION: Maintenance fee (and surcharge, if any) payment must correctly identify: (1) the patent number and (2) the application number of the actual U.S. application leading to issuance of that patent to ensure the fee(s) is/are associated with the correct patent. 37 CFR 1.366(c) and (d).

SMALL ENTITY
☐ Patentee claims, or has previously claimed, small entity status. See 37 CFR 1.27.

LOSS OF ENTITLEMENT TO SMALL ENTITY STATUS
☐ Patentee is no longer entitled to small entity status. See 37 CFR 1.27(g)

NOT Small Entity			Small Entity		
	Fee	Code		Fee	Code
○	3 ½ year	(1551)	○	3 ½ year	(2551)
○	7 ½ year	(1552)	○	7 ½ year	(2552)
◉	11 ½ year	(1553)	○	11 ½ year	(2553)

SURCHARGE
The surcharge required by 37 CFR 1.20(i)(2) (Fee Code 1558) must be paid as a condition of accepting unintentionally delayed payment of the maintenance fee.

MAINTENANCE FEE (37 CFR 1.20(e)-(g))
The appropriate maintenance fee must be submitted with this petition.

STATEMENT
THE UNDERSIGNED CERTIFIES THAT THE DELAY IN PAYMENT OF THE MAINTENANCE FEE TO THIS PATENT WAS UNINTENTIONAL

PETITIONER(S) REQUEST THAT THE DELAYED PAYMENT OF THE MAINTENANCE FEE BE ACCEPTED AND THE PATENT REINSTATED

THIS PORTION MUST BE COMPLETED BY THE SIGNATORY OR SIGNATORIES

37 CFR 1.378(d) states: "Any petition under this section must be signed by an attorney or agent registered to practice before the Patent and Trademark Office, or by the patentee, the assignee, or other party in interest."

I certify, in accordance with 37 CFR 1.4(d)(4) that I am

◉ An attorney or agent registered to practice before the Patent and Trademark Office

○ A sole patentee

○ A joint patentee; I certify that I am authorized to sign this submission on behalf of all the other patentees.

○ A joint patentee; all of whom are signing this e-petition

○ The assignee of record of the entire interest

Patent Practitioner			
A signature of the applicant or representative is required in accordance with 37 CFR 1.33 and 10.18. Please see 37 CFR 1.4(d) for the form of the signature			
Signature	/Brennan C. Swain/	Date (YYYY-MM-DD)	2010-01-05
Name	Brennan C. Swain	Registration Number	43175

This collection of information is required by 37 CFR 1.378(c). The information is required to obtain or retain a benefit by the public which is to file (and by the USPTO to process) an application. Confidentiality is governed by 35 U.S.C. 122 and 37 CFR 1.11 and 1.14. This collection is estimated to take 1 hour to complete, including gathering, preparing, and submitting the completed application form to the USPTO. Time will vary depending upon the individual case. Any comments on the amount of time you require to complete this form and/ or suggestions for reducing this burden, should be sent to the Chief Information Officer, U.S. Patent and Trademark Office, U.S. Department of Commerce, P.O. Box 1450, Alexandria, VA 22313-1450. DO NOT SEND FEES OR COMPLETED FORMS TO THIS ADDRESS. **This form can only be used when in conjunction with EFS-Web. If this form is mailed to the USPTO, it may cause delays in reinstating the patent.**

Privacy Act Statement

The Privacy Act of 1974 (P.L. 93-579) requires that you be given certain information in connection with your submission of the attached form related to a patent application or patent. Accordingly, pursuant to the requirements of the Act, please be advised that: (1) the general authority for the collection of this information is 35 U.S.C. 2(b)(2); (2) furnishing of the information solicited is voluntary; and (3) the principal purpose for which the information is used by the U.S. Patent and Trademark Office is to process and/or examine your submission related to a patent application or patent. If you do not furnish the requested information, the U.S. Patent and Trademark Office may not be able to process and/or examine your submission, which may result in termination of proceedings or abandonment of the application or expiration of the patent.

The information provided by you in this form will be subject to the following routine uses:

1. The information on this form will be treated confidentially to the extent allowed under the Freedom of Information Act (5 U.S.C. 552) and the Privacy Act (5 U.S.C. 552a). Records from this system of records may be disclosed to the Department of Justice to determine whether the Freedom of Information Act requires disclosure of these records.

2. A record from this system of records may be disclosed, as a routine use, in the course of presenting evidence to a court, magistrate, or administrative tribunal, including disclosures to opposing counsel in the course of settlement negotiations.

3. A record in this system of records may be disclosed, as a routine use, to a Member of Congress submitting a request involving an individual, to whom the record pertains, when the individual has requested assistance from the Member with respect to the subject matter of the record.

4. A record in this system of records may be disclosed, as a routine use, to a contractor of the Agency having need for the information in order to perform a contract. Recipients of information shall be required to comply with the requirements of the Privacy Act of 1974, as amended, pursuant to 5 U.S.C. 552a(m).

5. A record related to an International Application filed under the Patent Cooperation Treaty in this system of records may be disclosed, as a routine use, to the International Bureau of the World Intellectual Property Organization, pursuant to the Patent Cooperation Treaty.

6. A record in this system of records may be disclosed, as a routine use, to another federal agency for purposes of National Security review (35 U.S.C. 181) and for review pursuant to the Atomic Energy Act (42 U.S.C. 218(c)).

7. A record from this system of records may be disclosed, as a routine use, to the Administrator, General Services, or his/her designee, during an inspection of records conducted by GSA as part of that agency's responsibility to recommend improvements in records management practices and programs, under authority of 44 U.S.C. 2904 and 2906. Such disclosure shall be made in accordance with the GSA regulations governing inspection of records for this purpose, and any other relevant (i.e., GSA or Commerce) directive. Such disclosure shall not be used to make determinations about individuals.

8. A record from this system of records may be disclosed, as a routine use, to the public after either publication of the application pursuant to 35 U.S.C. 122(b) or issuance of a patent pursuant to 35 U.S.C. 151. Further, a record may be disclosed, subject to the limitations of 37 CFR 1.14, as a routine use, to the public if the record was filed in an application which became abandoned or in which the proceedings were terminated and which application is referenced by either a published application, an application open to public inspections or an issued patent.

9. A record from this system of records may be disclosed, as a routine use, to a Federal, State, or local law enforcement agency, if the USPTO becomes aware of a violation or potential violation of law or regulation.

UNITED STATES PATENT AND TRADEMARK OFFICE

Commissioner for Patents
United States Patent and Trademark Office
P.O. Box 1450
Alexandria, VA 22313-1450
www.uspto.gov

In re Patent No. 5622414
Issue Date: April 22,1997
Application No. 08073124
Filed: June 7,1993
Attorney Docket No. 56237

:

:DECISION GRANTING PETITION
:UNDER 37 CFR 1.378(c)

:

This is a decision on the electronic petition, filed January 5,2010 ,under 37 CFR 1.378(c) to accept the unintentionally delayed payment of the 11.5 year maintenance fee for the above-identified patent.

The petition is **GRANTED**.

The maintenance fee is accepted, and the above-identified patent reinstated as of January 5,2010 .
This decision also constitutes notice that the fee has been accepted. An electronic copy of the petition and this decision has been created as an entry in the Image File Wrapper. Nevertheless, petitioner should print and retain an independent copy.

Telephone inquiries related to this electronic decision should be directed to the Electronic Business Center at 1-866-217-9197.

Under the Paperwork Reduction Act of 1995, no persons are required to respond to a collection of information unless it displays valid OMB control number.

PETITION TO ACCEPT UNINTENTIONALLY DELAYED PAYMENT OF MAINTENANCE FEE IN AN EXPIRED PATENT (37 CFR 1.378(c))

Patent Number	Issue Date (YYYY-MM-DD)	Application Number	Filing Date (YYYY-MM-DD)	Docket Number (if applicable)
5370245	1994-12-06	08/075,112	1993-06-11	9761.3501

CAUTION: Maintenance fee (and surcharge, if any) payment must correctly identify: (1) the patent number and (2) the application number of the actual U.S. application leading to issuance of that patent to ensure the fee(s) is/are associated with the correct patent. 37 CFR 1.366(c) and (d).

SMALL ENTITY
☒ Patentee claims, or has previously claimed, small entity status. See 37 CFR 1.27.

LOSS OF ENTITLEMENT TO SMALL ENTITY STATUS
☐ Patentee is no longer entitled to small entity status. See 37 CFR 1.27(g)

NOT Small Entity			Small Entity		
	Fee	Code		Fee	Code
○	3 ½ year	(1551)	○	3 ½ year	(2551)
○	7 ½ year	(1552)	○	7 ½ year	(2552)
○	11 ½ year	(1553)	◉	11 ½ year	(2553)

SURCHARGE
The surcharge required by 37 CFR 1.20(i)(2) (Fee Code 1558) must be paid as a condition of accepting unintentionally delayed payment of the maintenance fee.

MAINTENANCE FEE (37 CFR 1.20(e)-(g))
The appropriate maintenance fee must be submitted with this petition.

STATEMENT
THE UNDERSIGNED CERTIFIES THAT THE DELAY IN PAYMENT OF THE MAINTENANCE FEE TO THIS PATENT WAS UNINTENTIONAL

PETITIONER(S) REQUEST THAT THE DELAYED PAYMENT OF THE MAINTENANCE FEE BE ACCEPTED AND THE PATENT REINSTATED

THIS PORTION MUST BE COMPLETED BY THE SIGNATORY OR SIGNATORIES

37 CFR 1.378(d) states: "Any petition under this section must be signed by an attorney or agent registered to practice before the Patent and Trademark Office, or by the patentee, the assignee, or other party in interest."

I certify, in accordance with 37 CFR 1.4(d)(4) that I am

◉ An attorney or agent registered to practice before the Patent and Trademark Office

○ A sole patentee

○ A joint patentee; I certify that I am authorized to sign this submission on behalf of all the other patentees.

○ A joint patentee; all of whom are signing this e-petition

○ The assignee of record of the entire interest

Patent Practitioner			
A signature of the applicant or representative is required in accordance with 37 CFR 1.33 and 10.18. Please see 37 CFR 1.4(d) for the form of the signature			
Signature	/barry lee haley/	Date (YYYY-MM-DD)	2007-06-13
Name	Barry Lee Haley	Registration Number	25339

This collection of information is required by 37 CFR 1.378(c). The information is required to obtain or retain a benefit by the public which is to file (and by the USPTO to process) an application. Confidentiality is governed by 35 U.S.C. 122 and 37 CFR 1.11 and 1.14. This collection is estimated to take 1 hour to complete, including gathering, preparing, and submitting the completed application form to the USPTO. Time will vary depending upon the individual case. Any comments on the amount of time you require to complete this form and/ or suggestions for reducing this burden, should be sent to the Chief Information Officer, U.S. Patent and Trademark Office, U.S. Department of Commerce, P.O. Box 1450, Alexandria, VA 22313-1450. DO NOT SEND FEES OR COMPLETED FORMS TO THIS ADDRESS. **This form can only be used when in conjunction with EFS-Web. If this form is mailed to the USPTO, it may cause delays in reinstating the patent.**

Privacy Act Statement

The Privacy Act of 1974 (P.L. 93-579) requires that you be given certain information in connection with your submission of the attached form related to a patent application or patent. Accordingly, pursuant to the requirements of the Act, please be advised that: (1) the general authority for the collection of this information is 35 U.S.C. 2(b)(2); (2) furnishing of the information solicited is voluntary; and (3) the principal purpose for which the information is used by the U.S. Patent and Trademark Office is to process and/or examine your submission related to a patent application or patent. If you do not furnish the requested information, the U.S. Patent and Trademark Office may not be able to process and/or examine your submission, which may result in termination of proceedings or abandonment of the application or expiration of the patent.

The information provided by you in this form will be subject to the following routine uses:

1. The information on this form will be treated confidentially to the extent allowed under the Freedom of Information Act (5 U.S.C. 552) and the Privacy Act (5 U.S.C. 552a). Records from this system of records may be disclosed to the Department of Justice to determine whether the Freedom of Information Act requires disclosure of these record s.

2. A record from this system of records may be disclosed, as a routine use, in the course of presenting evidence to a court, magistrate, or administrative tribunal, including disclosures to opposing counsel in the course of settlement negotiations.

3. A record in this system of records may be disclosed, as a routine use, to a Member of Congress submitting a request involving an individual, to whom the record pertains, when the individual has requested assistance from the Member with respect to the subject matter of the record.

4. A record in this system of records may be disclosed, as a routine use, to a contractor of the Agency having need for the information in order to perform a contract. Recipients of information shall be required to comply with the requirements of the Privacy Act of 1974, as amended, pursuant to 5 U.S.C. 552a(m).

5. A record related to an International Application filed under the Patent Cooperation Treaty in this system of records may be disclosed, as a routine use, to the International Bureau of the World Intellectual Property Organization, pursuant to the Patent Cooperation Treaty.

6. A record in this system of records may be disclosed, as a routine use, to another federal agency for purposes of National Security review (35 U.S.C. 181) and for review pursuant to the Atomic Energy Act (42 U.S.C. 218(c)).

7. A record from this system of records may be disclosed, as a routine use, to the Administrator, General Services, or his/her designee, during an inspection of records conducted by GSA as part of that agency's responsibility to recommend improvements in records management practices and programs, under authority of 44 U.S.C. 2904 and 2906. Such disclosure shall be made in accordance with the GSA regulations governing inspection of records for this purpose, and any other relevant (i.e., GSA or Commerce) directive. Such disclosure shall not be used to make determinations about individuals.

8. A record from this system of records may be disclosed, as a routine use, to the public after either publication of the application pursuant to 35 U.S.C. 122(b) or issuance of a patent pursuant to 35 U.S.C. 151. Further, a record may be disclosed, subject to the limitations of 37 CFR 1.14, as a routine use, to the public if the record was filed in an application which became abandoned or in which the proceedings were terminated and which application is referenced by either a published application, an application open to public inspections or an issued patent.

9. A record from this system of records may be disclosed, as a routine use, to a Federal, State, or local law enforcement agency, if the USPTO becomes aware of a violation or potential violation of law or regulation.

UNITED STATES PATENT AND TRADEMARK OFFICE

Commissioner for Patents
United States Patent and Trademark Office
P.O. Box 1450
Alexandria, VA 22313-1450
www.uspto.gov

In re Patent No. 5370245
Issue Date: December 6,1994
Application No. 08075112
Filed: June 11,1993
Attorney Docket No. 3447A

:
:DECISION GRANTING PETITION
:UNDER 37 CFR 1.378(c)
:

This is a decision on the electronic petition, filed June 13,2007 ,under 37 CFR 1.378(c) to accept the unintentionally delayed payment of the 11.5 year maintenance fee for the above-identified patent.

The petition is GRANTED.

The maintenance fee is accepted, and the above-identified patent reinstated as of June 13,2007 . This decision also constitutes notice that the fee has been accepted. An electronic copy of the petition and this decision has been created as an entry in an Image File Wrapper. Nevertheless, petitioner should print and retain an independent copy

Telephone inquires related to this electronic decision should be directed to the Electronic Business Center at 1-866-217-9197.

UNITED STATES PATENT AND TRADEMARK OFFICE

Commissioner for Patents
United States Patent and Trademark Office
P.O. Box 1450
Alexandria, VA 22313-1450
www.uspto.gov

Paper No. 15

James V. Lilly
Office of Intellectual Property Counsel
3M Innovative Properties Company
P.O. Box 33427
St. Paul, MN 55133-3427

COPY MAILED

MAY 2 4 2005

OFFICE OF PETITIONS

In re Patent No. 5,386,772	:	
Issue Date: February 7, 1995	:	
Application No. 08/077,289	:	ON PETITION
Filed: June 15, 1993	:	
Patentee(s) Charles V. Tolle, et. al.	:	

This is a decision on the petition under 37 CFR 1.378(c), filed by facsimile transmission on April 7, 2005, to accept the delayed payment of a maintenance fee for the above-identified patent.

The petition is **DISMISSED**.

If reconsideration of this decision is desired, a petition for reconsideration under 37 CFR 1.378(e) must be filed within **TWO (2) MONTHS** from the mail date of this decision and accompanied by the petition fee of $400, as set forth in 37 CFR 1.17(f). No extension of this two-month time limit can be granted under 37 CFR 1.136(a) or (b). This is **not** a final agency action within the meaning of 5 U.S.C. § 704.

A petition under 37 CFR 1.378(c) must be filed within twenty-four months after the six month grace period specified in 35 USC 41(b). The six month grace period for the instant patent expired after midnight on February 7, 2003. Accordingly, an unintentional petition to reinstate the instant patent must have been submitted no later than February 7, 2005. Since the petition was not timely filed, the instant patent will not be reinstated under the unintentional provisions of 37 CFR 1.378(c).

35 U.S.C. § 41(c)(1) authorizes the Commissioner to accept a delayed maintenance fee payment within twenty-four (24) months after the expiration of the six-month grace period specified in 35 U.S.C. § 41(b) if the delay is shown to have been unintentional, and authorizes the Commissioner to accept a delayed maintenance fee payment at any time if the delay is shown to have been unavoidable. Thus, 35 U.S.C. § 41(c)(1) does not authorize the Commissioner to accept a delayed maintenance fee payment later than twenty-four (24) months after the expiration of the six-month grace period specified in 35 U.S.C. § 41(b) unless the delay is shown to have been unavoidable. Since the instant petition was not filed within twenty-four (24) months after the expiration of the six-month grace period specified in 35 U.S.C. § 41(b), the Commissioner cannot accept a delayed maintenance fee payment for the above-identified patent under 37 CFR 1.378(c).

Should petitioner wish to pursue reinstatement of the above-identified patent on the basis of unavoidable delay, petitioner should file a petition under 35 U.S.C. § 41(c) and 37 CFR 1.378(b), which must be accompanied by (1) an adequate showing that the delay was unavoidable, since reasonable care was taken to ensure that the maintenance fee would be paid timely, (2) payment of the appropriate maintenance fee, unless previously submitted, and (3) payment of the surcharge set forth in 37 CFR 1.20(i)(1).

There is no indication that the person signing the instant petition was ever given a power of attorney or authorization of agent to prosecute the above-identified patent. However, in accordance with 37 CFR 1.34(a), the signature appearing on the petition shall constitute a representation to the United States Patent and Trademark Office that he/she is authorized to represent the particular party in whose behalf he/she acts.

Further correspondence with respect to this matter should be addressed as follows:

By Mail: Mail Stop PETITIONS
Commissioner for Patents
Post Office Box 1450
Alexandria, VA 22313-1450

By Hand: Customer Service Window
Randolph Building
401 Dulany Street
Alexandria, VA 22314

By Fax: (703) 872-9306
ATTN: Office of Petitions

Any questions concerning this matter may be directed to the undersigned at (571) 272-3226.

Andrea Smith
Petitions Examiner
Office of Petitions
Office of the Deputy Commissioner
for Patent Examination Policy

UNITED STATES PATENT AND TRADEMARK OFFICE

Commissioner for Patents
United States Patent and Trademark Office
P.O. Box 1450
Alexandria, VA 22313-1450
www.uspto.gov

Paper No. 17

DANIEL BERTRAM
DATAMETRICS CORPORATION
1717 DIPLOMACY ROW
ORLANDO FL 32809

COPY MAILED
FEB 2 2 2006
OFFICE OF PETITIONS

In re Application of	:	
Charles V. Tolle et al.	:	
Application No. 08/077,289	:	
Patent No. 5,386,772	:	
Filed: June 15, 1993	:	LETTER
Issue Date: February 7, 1995	:	
Attorney Docket Number: 7260	:	
Title: HIGH SPEED MEDIA	:	
MANAGEMENT DEVICE	:	

This is a decision on the petition filed June 16, 2005, pursuant to 37 C.F.R. §1.378(b)[1], to revive the above-identified application.

The Office regrets the delay in issuing this decision.

---

1 Any petition to accept an unavoidably delayed payment of a maintenance fee filed under 37 C.F.R. §1.378(b) must include:

(1) The required maintenance fee set forth in 37 C.F.R. §1.20 (e) through (g);

(2) The surcharge set forth in 37 C.F.R. §1.20(i)(1), and;

(3) A showing that the delay was unavoidable since reasonable care was taken to ensure that the maintenance fee would be paid timely and that the petition was filed promptly after the patentee was notified of, or otherwise became aware of, the expiration of the patent. The showing must enumerate the steps taken to ensure timely payment of the maintenance fee, the date and the manner in which patentee became aware of the expiration of the patent, and the steps taken to file the petition promptly.

The patent issued on February 7, 1995. The grace period for paying the 7½ year maintenance fee provided in 37 CFR §1.362(e) expired at midnight on February 7, 2003, with no payment received. Accordingly, the patent expired on February 7, 2003 at midnight.

37 C.F.R. §1.378(d) sets forth, *in toto*: "Any petition under this section must be signed by an attorney or agent registered to practice before the Patent and Trademark Office, or by the patentee, the assignee, or other party in interest."

Petitioner has not established that the person who signed the petition form, James Lilly of the Office Intellectual Property Counsel of the 3M Innovative Properties Company, is authorized to sign on behalf of the patentee, assignee, or other party in interest.

Petitioner should complete a Statement Under 37 CFR 3.73(b) and return it with a properly signed petition under 37 CFR 1.378(b). Petitioner may wish to download the form from http://www.uspto.gov/web/forms/sb0096.pdf.

Any reply to this communication must be submitted within **ONE MONTH** from the mail date of this decision. Extensions of time under 37 C.F.R. §1.136(a) are permitted. The reply should indicate in a prominent manner that the attorney handling this matter is Paul Shanoski, and may be submitted by mail[2], hand-delivery[3], or facsimile[4]. Telephone inquiries regarding *this decision* should be directed to the undersigned at (571) 272-3225. All other inquiries concerning examination procedures or status of the application should be directed to the Technology Center.

Paul Shanoski
Senior Attorney
Office of Petitions
United States Patent and Trademark Office

cc: James Lilly
3M Center
PO Box 33427
St. Paul, MN 55133-3427

2 Mail Stop Petition, Commissioner for Patents, United States Patent and Trademark Office, P.O. Box 1450, Alexandria, VA, 22313-1450.
3 Customer Window, Randolph Building, 401 Dulaney Street, Alexandria, VA, 22314.
4 (571) 273-8300- please note this is a central facsimile number.

UNITED STATES PATENT AND TRADEMARK OFFICE

COMMISSIONER FOR PATENTS
UNITED STATES PATENT AND TRADEMARK OFFICE
WASHINGTON, D.C. 20231
www.uspto.gov

Paper No. 8

AKOO-TOREN
521 FIFTH AVENUE
NEW YORK, NY 10175

COPY MAILED

MAY 0 8 2003

OFFICE OF PETITIONS

In re Application of :
Takayuki Nemoto :
Application No. 08/077,704 : ON PETITION
Filed: June 15, 1993 :
Attorney Docket No. A-8963 :

This is a decision on the petition under 37 CFR 1.182, filed January 22, 1998, "to vacate the notice of abandonment of January 16, 1997 and restore the application to pending status." The Office sincerely apologizes for the delay in responding to the instant petition and any inconvenience caused to petitioner by this delay.

The petition is **GRANTED**.

This application became abandoned for failure to file a response to the "Decision on Petition" mailed October 18, 1994. A Notice of Abandonment was mailed on January 16, 1997.

The "Decision on Petition," mailed October 18, 1994, required the revival of the prior application 07/766,824 to establish continuity with the above-identified application. Applicant petitioned for revival in application no. 07/766,824, which was granted on June 2, 1995, thereby establishing the required continuity with the above-identified application and, accordingly, meeting the response requirement of the "Decision on Petition," mailed October 18, 1994.

As such, the holding of abandonment is hereby withdrawn and the Notice of abandonment, dated January 16, 1997, is vacated.

The file is being forwarded to the Office of Initial Patent Examination for further processing and issuance of a corrected filing receipt indicating the above-identified application as a continuation of application no. 07/766,824.

Telephone inquiries concerning this matter may be directed to the undersigned at (703) 306-9200.

Edward J. Tannouse
Petitions Attorney
Office of Petitions
United States Patent and Trademark Office

UNITED STATES PATENT AND TRADEMARK OFFICE

JAN 26 2005

Commissioner for Patents
United States Patent and Trademark Office
P.O. Box 1450
Alexandria, VA 22313-1450
www.uspto.gov

WOODWOCK WASHBURN LLP
ONE LIBERTY PLACE 46TH FLOOR
PHILADELPHIA PA 19103

In re Application of
Tullis, Richard H.
Serial No. : 08/078,768
Filed : 16 July 1993
Attorney Dkt No. : ISIS-4502

Decision on Petition

This letter is in response to the Petition under 37 C.F.R. 1.181, filed on 18 October 2004, to request reconsideration of the notice of defective appeal brief. The delay in acting on this petition is regretted.

BACKGROUND

A final rejection was mailed to applicants' representative on 12/15/2003. Applicants responded by filing an appeal brief on 4/15/2004 along with a number of additional references. Applicants' representative was sent a notice of defective appeal brief on 6/8/2004. Applicants responded by filing a second appeal brief on 7/8/2004, along with a number of additional references and a supplemental information disclosure statement. Applicants' representative was sent a second notice of defective appeal brief on 9/15/2004. On 10/18/2004, applicants' representative filed arguments in response to the second notice of defective appeal brief, a petition in which appellants argue that the second brief is not defective, and finally a third appeal brief.

DISCUSSION

The application, prosecution history and petition have been reviewed and carefully considered. Applicants petition under 37 C.F.R. 1.181, to reconsider the determination of non-compliance under 37 CFR 1.192 of the Appeal Brief filed 8 July 2004.

The petition argues that citation of references not of record is not a valid reason fro finding the Appeal Brief defective under 37 CFR 1.192. Applicants are correct.

However the filing of a third Appeal Brief on the same day as the petition was filed precludes the Office from entering the second Appeal Brief. The Third Appeal Brief will be considered by the Examiner and if found compliant with 37 CFR 1.192, an Examiner's Answer will be set forth.

It is noted that timeliness of evidence, declarations or affidavits is not grounds for considering an Appeal Brief Non-Compliant under 37 CDR 1.192. If evidence, declarations or affidavits are submitted in an untimely manner absent good and sufficient reasons for the delay, the Examiner may refuse entry of the evidence, declarations or affidavits under 37 CFR 1.195. When an application is after final, a refusal to enter untimely material would be communicated to Applicants by way of an Advisory Action so that the file record is clear as to what material is of record and under consideration.

If an Appeal Brief contains arguments directed to material not of record, the Examiner's Answer will note the arguments directed to evidence not of record are not sufficient to overcome any rejections and have not been considered further.

DECISION

For the reasons set forth above, the Petition under 37 C.F.R. 1.181 to withdraw the notice of non-compliance under 37 CFR 1.192 is **DISMISSED** in view of the Appeal Brief filed 18 October 2004.

Any request for consideration of this petition decision must be filed within two (2) months of the mailing date of this decision.

This application will be forwarded to the Examiner for consideration of the Appeal Brief filed 18 October 2004.

Should there be any questions regarding this decision, please contact Special Program Examiner Julie Burke, by mail addressed to Director, Technology Center 1600, PO BOX 1450, ALEXANDRIA, VA 22313-1450, or by telephone at (571) 272-1600 or by Official Fax at 703-872-9306.

Jasemine C. Chambers

Jasemine Chambers

Director, Technology Center 1600

Under the Paperwork Reduction Act of 1995, no persons are required to respond to a collection of information unless it displays valid OMB control number.

PETITION TO ACCEPT UNINTENTIONALLY DELAYED PAYMENT OF MAINTENANCE FEE IN AN EXPIRED PATENT (37 CFR 1.378(c))

Patent Number	Issue Date (YYYY-MM-DD)	Application Number	Filing Date (YYYY-MM-DD)	Docket Number (if applicable)
5,404,000	1995-04-04	08079517	1993-06-18	14174-36650

CAUTION: Maintenance fee (and surcharge, if any) payment must correctly identify: (1) the patent number and (2) the application number of the actual U.S. application leading to issuance of that patent to ensure the fee(s) is/are associated with the correct patent. 37 CFR 1.366(c) and (d).

SMALL ENTITY
☐ Patentee claims, or has previously claimed, small entity status. See 37 CFR 1.27.

LOSS OF ENTITLEMENT TO SMALL ENTITY STATUS
☐ Patentee is no longer entitled to small entity status. See 37 CFR 1.27(g)

NOT Small Entity			Small Entity		
	Fee	Code		Fee	Code
○	3 ½ year	(1551)	○	3 ½ year	(2551)
○	7 ½ year	(1552)	○	7 ½ year	(2552)
◉	11 ½ year	(1553)	○	11 ½ year	(2553)

SURCHARGE
The surcharge required by 37 CFR 1.20(i)(2) (Fee Code 1558) must be paid as a condition of accepting unintentionally delayed payment of the maintenance fee.

MAINTENANCE FEE (37 CFR 1.20(e)-(g))
The appropriate maintenance fee must be submitted with this petition.

STATEMENT
THE UNDERSIGNED CERTIFIES THAT THE DELAY IN PAYMENT OF THE MAINTENANCE FEE TO THIS PATENT WAS UNINTENTIONAL

PETITIONER(S) REQUEST THAT THE DELAYED PAYMENT OF THE MAINTENANCE FEE BE ACCEPTED AND THE PATENT REINSTATED

THIS PORTION MUST BE COMPLETED BY THE SIGNATORY OR SIGNATORIES

37 CFR 1.378(d) states: "Any petition under this section must be signed by an attorney or agent registered to practice before the Patent and Trademark Office, or by the patentee, the assignee, or other party in interest."

I certify, in accordance with 37 CFR 1.4(d)(4) that I am

◉ An attorney or agent registered to practice before the Patent and Trademark Office

○ A sole patentee

○ A joint patentee; I certify that I am authorized to sign this submission on behalf of all the other patentees.

○ A joint patentee; all of whom are signing this e-petition

○ The assignee of record of the entire interest

Patent Practitioner			
A signature of the applicant or representative is required in accordance with 37 CFR 1.33 and 10.18. Please see 37 CFR 1.4(d) for the form of the signature			
Signature	/John R. Harris/	Date (YYYY-MM-DD)	2007-07-18
Name	John R. Harris	Registration Number	30388

This collection of information is required by 37 CFR 1.378(c). The information is required to obtain or retain a benefit by the public which is to file (and by the USPTO to process) an application. Confidentiality is governed by 35 U.S.C. 122 and 37 CFR 1.11 and 1.14. This collection is estimated to take 1 hour to complete, including gathering, preparing, and submitting the completed application form to the USPTO. Time will vary depending upon the individual case. Any comments on the amount of time you require to complete this form and/ or suggestions for reducing this burden, should be sent to the Chief Information Officer, U.S. Patent and Trademark Office, U.S. Department of Commerce, P.O. Box 1450, Alexandria, VA 22313-1450. DO NOT SEND FEES OR COMPLETED FORMS TO THIS ADDRESS. **This form can only be used when in conjunction with EFS-Web. If this form is mailed to the USPTO, it may cause delays in reinstating the patent.**

Privacy Act Statement

The Privacy Act of 1974 (P.L. 93-579) requires that you be given certain information in connection with your submission of the attached form related to a patent application or patent. Accordingly, pursuant to the requirements of the Act, please be advised that: (1) the general authority for the collection of this information is 35 U.S.C. 2(b)(2); (2) furnishing of the information solicited is voluntary; and (3) the principal purpose for which the information is used by the U.S. Patent and Trademark Office is to process and/or examine your submission related to a patent application or patent. If you do not furnish the requested information, the U.S. Patent and Trademark Office may not be able to process and/or examine your submission, which may result in termination of proceedings or abandonment of the application or expiration of the patent.

The information provided by you in this form will be subject to the following routine uses:

1. The information on this form will be treated confidentially to the extent allowed under the Freedom of Information Act (5 U.S.C. 552) and the Privacy Act (5 U.S.C. 552a). Records from this system of records may be disclosed to the Department of Justice to determine whether the Freedom of Information Act requires disclosure of these record s.

2. A record from this system of records may be disclosed, as a routine use, in the course of presenting evidence to a court, magistrate, or administrative tribunal, including disclosures to opposing counsel in the course of settlement negotiations.

3. A record in this system of records may be disclosed, as a routine use, to a Member of Congress submitting a request involving an individual, to whom the record pertains, when the individual has requested assistance from the Member with respect to the subject matter of the record.

4. A record in this system of records may be disclosed, as a routine use, to a contractor of the Agency having need for the information in order to perform a contract. Recipients of information shall be required to comply with the requirements of the Privacy Act of 1974, as amended, pursuant to 5 U.S.C. 552a(m).

5. A record related to an International Application filed under the Patent Cooperation Treaty in this system of records may be disclosed, as a routine use, to the International Bureau of the World Intellectual Property Organization, pursuant to the Patent Cooperation Treaty.

6. A record in this system of records may be disclosed, as a routine use, to another federal agency for purposes of National Security review (35 U.S.C. 181) and for review pursuant to the Atomic Energy Act (42 U.S.C. 218(c)).

7. A record from this system of records may be disclosed, as a routine use, to the Administrator, General Services, or his/her designee, during an inspection of records conducted by GSA as part of that agency's responsibility to recommend improvements in records management practices and programs, under authority of 44 U.S.C. 2904 and 2906. Such disclosure shall be made in accordance with the GSA regulations governing inspection of records for this purpose, and any other relevant (i.e., GSA or Commerce) directive. Such disclosure shall not be used to make determinations about individuals.

8. A record from this system of records may be disclosed, as a routine use, to the public after either publication of the application pursuant to 35 U.S.C. 122(b) or issuance of a patent pursuant to 35 U.S.C. 151. Further, a record may be disclosed, subject to the limitations of 37 CFR 1.14, as a routine use, to the public if the record was filed in an application which became abandoned or in which the proceedings were terminated and which application is referenced by either a published application, an application open to public inspections or an issued patent.

9. A record from this system of records may be disclosed, as a routine use, to a Federal, State, or local law enforcement agency, if the USPTO becomes aware of a violation or potential violation of law or regulation.

UNITED STATES PATENT AND TRADEMARK OFFICE

Commissioner for Patents
United States Patent and Trademark Office
P.O. Box 1450
Alexandria, VA 22313-1450
www.uspto.gov

In re Patent No. 5404000
Issue Date: April 4,1995
Application No. 08079517
Filed: June 18,1993
Attorney Docket No. 130190123

:
:DECISION GRANTING PETITION
:UNDER 37 CFR 1.378(c)
:

This is a decision on the electronic petition, filed July 18,2007 ,under 37 CFR 1.378(c) to accept the unintentionally delayed payment of the 11.5 year maintenance fee for the above-identified patent.

The petition is GRANTED.

The maintenance fee is accepted, and the above-identified patent reinstated as of July 18,2007 . This decision also constitutes notice that the fee has been accepted. An electronic copy of the petition and this decision has been created as an entry in an Image File Wrapper. Nevertheless, petitioner should print and retain an independent copy

Telephone inquires related to this electronic decision should be directed to the Electronic Business Center at 1-866-217-9197.

Approved for use through 04/30/2009. OMB 0651-0016
U.S. Patent and Trademark Office: U.S. DEPARTMENT OF COMMERCE
Under the Paperwork Reduction Act of 1995, no persons are required to respond to a collection of information unless it displays valid OMB control number.

PETITION TO ACCEPT UNINTENTIONALLY DELAYED PAYMENT OF MAINTENANCE FEE IN AN EXPIRED PATENT (37 CFR 1.378(c))

Patent Number	Issue Date (YYYY-MM-DD)	Application Number	Filing Date (YYYY-MM-DD)	Docket Number (if applicable)
5,348,614	1994-09-20	08080896	1993-06-22	LLC-2245

CAUTION: Maintenance fee (and surcharge, if any) payment must correctly identify: (1) the patent number and (2) the application number of the actual U.S. application leading to issuance of that patent to ensure the fee(s) is/are associated with the correct patent. 37 CFR 1.366(c) and (d).

SMALL ENTITY
☐ Patentee claims, or has previously claimed, small entity status. See 37 CFR 1.27.

LOSS OF ENTITLEMENT TO SMALL ENTITY STATUS
☐ Patentee is no longer entitled to small entity status. See 37 CFR 1.27(g)

NOT Small Entity		Small Entity	
Fee	Code	Fee	Code
○ 3 ½ year	(1551)	○ 3 ½ year	(2551)
○ 7 ½ year	(1552)	○ 7 ½ year	(2552)
◉ 11 ½ year	(1553)	○ 11 ½ year	(2553)

SURCHARGE
The surcharge required by 37 CFR 1.20(i)(2) (Fee Code 1558) must be paid as a condition of accepting unintentionally delayed payment of the maintenance fee.

MAINTENANCE FEE (37 CFR 1.20(e)-(g))
The appropriate maintenance fee must be submitted with this petition.

STATEMENT
THE UNDERSIGNED CERTIFIES THAT THE DELAY IN PAYMENT OF THE MAINTENANCE FEE TO THIS PATENT WAS UNINTENTIONAL

PETITIONER(S) REQUEST THAT THE DELAYED PAYMENT OF THE MAINTENANCE FEE BE ACCEPTED AND THE PATENT REINSTATED

THIS PORTION MUST BE COMPLETED BY THE SIGNATORY OR SIGNATORIES

37 CFR 1.378(d) states: "Any petition under this section must be signed by an attorney or agent registered to practice before the Patent and Trademark Office, or by the patentee, the assignee, or other party in interest."

I certify, in accordance with 37 CFR 1.4(d)(4) that I am

◉ An attorney or agent registered to practice before the Patent and Trademark Office

○ A sole patentee

○ A joint patentee; I certify that I am authorized to sign this submission on behalf of all the other patentees.

○ A joint patentee; all of whom are signing this e-petition

○ The assignee of record of the entire interest

Patent Practitioner			
A signature of the applicant or representative is required in accordance with 37 CFR 1.33 and 10.18. Please see 37 CFR 1.4(d) for the form of the signature			
Signature	/Christopher P. Maiorana/	Date (YYYY-MM-DD)	2007-03-30
Name	Christopher P. Maiorana	Registration Number	42829

This collection of information is required by 37 CFR 1.378(c). The information is required to obtain or retain a benefit by the public which is to file (and by the USPTO to process) an application. Confidentiality is governed by 35 U.S.C. 122 and 37 CFR 1.11 and 1.14. This collection is estimated to take 1 hour to complete, including gathering, preparing, and submitting the completed application form to the USPTO. Time will vary depending upon the individual case. Any comments on the amount of time you require to complete this form and/ or suggestions for reducing this burden, should be sent to the Chief Information Officer, U.S. Patent and Trademark Office, U.S. Department of Commerce, P.O. Box 1450, Alexandria, VA 22313-1450. DO NOT SEND FEES OR COMPLETED FORMS TO THIS ADDRESS. **This form can only be used when in conjunction with EFS-Web. If this form is mailed to the USPTO, it may cause delays in reinstating the patent.**

Privacy Act Statement

The Privacy Act of 1974 (P.L. 93-579) requires that you be given certain information in connection with your submission of the attached form related to a patent application or patent. Accordingly, pursuant to the requirements of the Act, please be advised that: (1) the general authority for the collection of this information is 35 U.S.C. 2(b)(2); (2) furnishing of the information solicited is voluntary; and (3) the principal purpose for which the information is used by the U.S. Patent and Trademark Office is to process and/or examine your submission related to a patent application or patent. If you do not furnish the requested information, the U.S. Patent and Trademark Office may not be able to process and/or examine your submission, which may result in termination of proceedings or abandonment of the application or expiration of the patent.

The information provided by you in this form will be subject to the following routine uses:

1. The information on this form will be treated confidentially to the extent allowed under the Freedom of Information Act (5 U.S.C. 552) and the Privacy Act (5 U.S.C. 552a). Records from this system of records may be disclosed to the Department of Justice to determine whether the Freedom of Information Act requires disclosure of these record s.

2. A record from this system of records may be disclosed, as a routine use, in the course of presenting evidence to a court, magistrate, or administrative tribunal, including disclosures to opposing counsel in the course of settlement negotiations.

3. A record in this system of records may be disclosed, as a routine use, to a Member of Congress submitting a request involving an individual, to whom the record pertains, when the individual has requested assistance from the Member with respect to the subject matter of the record.

4. A record in this system of records may be disclosed, as a routine use, to a contractor of the Agency having need for the information in order to perform a contract. Recipients of information shall be required to comply with the requirements of the Privacy Act of 1974, as amended, pursuant to 5 U.S.C. 552a(m).

5. A record related to an International Application filed under the Patent Cooperation Treaty in this system of records may be disclosed, as a routine use, to the International Bureau of the World Intellectual Property Organization, pursuant to the Patent Cooperation Treaty.

6. A record in this system of records may be disclosed, as a routine use, to another federal agency for purposes of National Security review (35 U.S.C. 181) and for review pursuant to the Atomic Energy Act (42 U.S.C. 218(c)).

7. A record from this system of records may be disclosed, as a routine use, to the Administrator, General Services, or his/her designee, during an inspection of records conducted by GSA as part of that agency's responsibility to recommend improvements in records management practices and programs, under authority of 44 U.S.C. 2904 and 2906. Such disclosure shall be made in accordance with the GSA regulations governing inspection of records for this purpose, and any other relevant (i.e., GSA or Commerce) directive. Such disclosure shall not be used to make determinations about individuals.

8. A record from this system of records may be disclosed, as a routine use, to the public after either publication of the application pursuant to 35 U.S.C. 122(b) or issuance of a patent pursuant to 35 U.S.C. 151. Further, a record may be disclosed, subject to the limitations of 37 CFR 1.14, as a routine use, to the public if the record was filed in an application which became abandoned or in which the proceedings were terminated and which application is referenced by either a published application, an application open to public inspections or an issued patent.

9. A record from this system of records may be disclosed, as a routine use, to a Federal, State, or local law enforcement agency, if the USPTO becomes aware of a violation or potential violation of law or regulation.

UNITED STATES PATENT AND TRADEMARK OFFICE

Commissioner for Patents
United States Patent and Trademark Office
P.O. Box 1450
Alexandria, VA 22313-1450
www.uspto.gov

In re Patent No. 5348614
Issue Date: September 20,1994
Application No. 08080896
Filed: June 22,1993
Attorney Docket No. LLC2245

:
:DECISION GRANTING PETITION
:UNDER 37 CFR 1.378(c)
:

This is a decision on the electronic petition, filed March 30,2007 ,under 37 CFR 1.378(c) to accept the unintentionally delayed payment of the 11.5 year maintenance fee for the above-identified patent.

The petition is GRANTED.

The maintenance fee is accepted, and the above-identified patent reinstated as of March 30,2007 . This decision also constitutes notice that the fee has been accepted. An electronic copy of the petition and this decision has been created as an entry in an Image File Wrapper. Nevertheless, petitioner should print and retain an independent copy

Telephone inquires related to this electronic decision should be directed to the Electronic Business Center at 1-866-217-9197.

UNITED STATES PATENT AND TRADEMARK OFFICE

#22

UNDER SECRETARY OF COMMERCE FOR INTELLECTUAL PROPERTY
AND DIRECTOR OF THE UNITED STATES PATENT AND TRADEMARK OFFICE
PO BOX 1450, ALEXANDRIA, VA 22313-1450
WWW.USPTO.GOV

AUG 26 2003

PETER J. DEHLINGER
DEHLIINGER & ASSOCIATES
P. O. BOX 60850
PALO ALTO, CA 94306

Certificate
AUG 28 2003
of Correction

In re Patent of
Alan Justice et al
Patent No.: 5,364,842
Issued: November 15, 1994
Attorney Docket No.: 865-0009.20

: PETITION DECISION

This is a decision on the petition originally filed under 37 CFR 1.48(a) and being treated as a petition under 37 CFR 1.324, filed May 11, 1994, requesting correction of inventorship in the above identified issued patent. The delay in acting on this petition is regretted and is likely due to the post-allowance processing which allowed the petition to be overlooked. The undecided petition was recently brought to the attention of the Office.

The petition under 37 CFR 1.324 is **GRANTED.**

The patented file is being forwarded to Certificate of Correction Branch for issuance of a certificate adding the name of an inventor inadvertently omitted.

Should there be any questions with respect to this decision, please contact William R. Dixon, Jr., by mail addressed to: Director, Technology Center 1600, PO BOX 1450, ALEXANDRIA, VA 22313-1450, or by telephone at (703)308-3824 or by facsimile transmission at (703) 305-7230.

William R. Dixon, Jr.
Special Program Examiner
Technology Center 1600

Under the Paperwork Reduction Act of 1995, no persons are required to respond to a collection of information unless it displays valid OMB control number.

PETITION TO ACCEPT UNINTENTIONALLY DELAYED PAYMENT OF MAINTENANCE FEE IN AN EXPIRED PATENT (37 CFR 1.378(c))

Patent Number	Issue Date (YYYY-MM-DD)	Application Number	Filing Date (YYYY-MM-DD)	Docket Number (if applicable)
5380346	1995-01-10	08083826	1993-06-25	OXYL115180

CAUTION: Maintenance fee (and surcharge, if any) payment must correctly identify: (1) the patent number and (2) the application number of the actual U.S. application leading to issuance of that patent to ensure the fee(s) is/are associated with the correct patent. 37 CFR 1.366(c) and (d).

SMALL ENTITY
☒ Patentee claims, or has previously claimed, small entity status. See 37 CFR 1.27.

LOSS OF ENTITLEMENT TO SMALL ENTITY STATUS
☐ Patentee is no longer entitled to small entity status. See 37 CFR 1.27(g)

NOT Small Entity			Small Entity		
	Fee	Code		Fee	Code
○	3 ½ year	(1551)	○	3 ½ year	(2551)
○	7 ½ year	(1552)	○	7 ½ year	(2552)
○	11 ½ year	(1553)	◉	11 ½ year	(2553)

SURCHARGE
The surcharge required by 37 CFR 1.20(i)(2) (Fee Code 1558) must be paid as a condition of accepting unintentionally delayed payment of the maintenance fee.

MAINTENANCE FEE (37 CFR 1.20(e)-(g))
The appropriate maintenance fee must be submitted with this petition.

STATEMENT
THE UNDERSIGNED CERTIFIES THAT THE DELAY IN PAYMENT OF THE MAINTENANCE FEE TO THIS PATENT WAS UNINTENTIONAL

PETITIONER(S) REQUEST THAT THE DELAYED PAYMENT OF THE MAINTENANCE FEE BE ACCEPTED AND THE PATENT REINSTATED

THIS PORTION MUST BE COMPLETED BY THE SIGNATORY OR SIGNATORIES

37 CFR 1.378(d) states: "Any petition under this section must be signed by an attorney or agent registered to practice before the Patent and Trademark Office, or by the patentee, the assignee, or other party in interest."

I certify, in accordance with 37 CFR 1.4(d)(4) that I am

◉ An attorney or agent registered to practice before the Patent and Trademark Office

○ A sole patentee

○ A joint patentee; I certify that I am authorized to sign this submission on behalf of all the other patentees.

○ A joint patentee; all of whom are signing this e-petition

○ The assignee of record of the entire interest

Patent Practitioner			
A signature of the applicant or representative is required in accordance with 37 CFR 1.33 and 10.18. Please see 37 CFR 1.4(d) for the form of the signature			
Signature	/Ward Brown/	Date (YYYY-MM-DD)	2007-01-22
Name	Ward Brown	Registration Number	28400

This collection of information is required by 37 CFR 1.378(c). The information is required to obtain or retain a benefit by the public which is to file (and by the USPTO to process) an application. Confidentiality is governed by 35 U.S.C. 122 and 37 CFR 1.11 and 1.14. This collection is estimated to take 1 hour to complete, including gathering, preparing, and submitting the completed application form to the USPTO. Time will vary depending upon the individual case. Any comments on the amount of time you require to complete this form and/ or suggestions for reducing this burden, should be sent to the Chief Information Officer, U.S. Patent and Trademark Office, U.S. Department of Commerce, P.O. Box 1450, Alexandria, VA 22313-1450. DO NOT SEND FEES OR COMPLETED FORMS TO THIS ADDRESS. **This form can only be used when in conjunction with EFS-Web. If this form is mailed to the USPTO, it may cause delays in reinstating the patent.**

Privacy Act Statement

The Privacy Act of 1974 (P.L. 93-579) requires that you be given certain information in connection with your submission of the attached form related to a patent application or patent. Accordingly, pursuant to the requirements of the Act, please be advised that: (1) the general authority for the collection of this information is 35 U.S.C. 2(b)(2); (2) furnishing of the information solicited is voluntary; and (3) the principal purpose for which the information is used by the U.S. Patent and Trademark Office is to process and/or examine your submission related to a patent application or patent. If you do not furnish the requested information, the U.S. Patent and Trademark Office may not be able to process and/or examine your submission, which may result in termination of proceedings or abandonment of the application or expiration of the patent.

The information provided by you in this form will be subject to the following routine uses:

1. The information on this form will be treated confidentially to the extent allowed under the Freedom of Information Act (5 U.S.C. 552) and the Privacy Act (5 U.S.C. 552a). Records from this system of records may be disclosed to the Department of Justice to determine whether the Freedom of Information Act requires disclosure of these record s.

2. A record from this system of records may be disclosed, as a routine use, in the course of presenting evidence to a court, magistrate, or administrative tribunal, including disclosures to opposing counsel in the course of settlement negotiations.

3. A record in this system of records may be disclosed, as a routine use, to a Member of Congress submitting a request involving an individual, to whom the record pertains, when the individual has requested assistance from the Member with respect to the subject matter of the record.

4. A record in this system of records may be disclosed, as a routine use, to a contractor of the Agency having need for the information in order to perform a contract. Recipients of information shall be required to comply with the requirements of the Privacy Act of 1974, as amended, pursuant to 5 U.S.C. 552a(m).

5. A record related to an International Application filed under the Patent Cooperation Treaty in this system of records may be disclosed, as a routine use, to the International Bureau of the World Intellectual Property Organization, pursuant to the Patent Cooperation Treaty.

6. A record in this system of records may be disclosed, as a routine use, to another federal agency for purposes of National Security review (35 U.S.C. 181) and for review pursuant to the Atomic Energy Act (42 U.S.C. 218(c)).

7. A record from this system of records may be disclosed, as a routine use, to the Administrator, General Services, or his/her designee, during an inspection of records conducted by GSA as part of that agency's responsibility to recommend improvements in records management practices and programs, under authority of 44 U.S.C. 2904 and 2906. Such disclosure shall be made in accordance with the GSA regulations governing inspection of records for this purpose, and any other relevant (i.e., GSA or Commerce) directive. Such disclosure shall not be used to make determinations about individuals.

8. A record from this system of records may be disclosed, as a routine use, to the public after either publication of the application pursuant to 35 U.S.C. 122(b) or issuance of a patent pursuant to 35 U.S.C. 151. Further, a record may be disclosed, subject to the limitations of 37 CFR 1.14, as a routine use, to the public if the record was filed in an application which became abandoned or in which the proceedings were terminated and which application is referenced by either a published application, an application open to public inspections or an issued patent.

9. A record from this system of records may be disclosed, as a routine use, to a Federal, State, or local law enforcement agency, if the USPTO becomes aware of a violation or potential violation of law or regulation.

UNITED STATES PATENT AND TRADEMARK OFFICE

Commissioner for Patents
United States Patent and Trademark Office
P.O. Box 1450
Alexandria, VA 22313-1450
www.uspto.gov

In re Patent No. 5380346
Issue Date: January 10,1995
Application No. 08083826
Filed: June 25,1993
Attorney Docket No. 1093

:
:DECISION GRANTING PETITION
:UNDER 37 CFR 1.378(c)
:

This is a decision on the electronic petition, filed January 22,2007 ,under 37 CFR 1.378(c) to accept the unintentionally delayed payment of the 11.5 year maintenance fee for the above-identified patent.

The petition is GRANTED.

The maintenance fee is accepted, and the above-identified patent reinstated as of January 22,2007 . This decision also constitutes notice that the fee has been accepted. An electronic copy of the petition and this decision has been created as an entry in an Image File Wrapper. Nevertheless, petitioner should print and retain an independent copy

Telephone inquires related to this electronic decision should be directed to the Electronic Business Center at 1-866-217-9197.

UNITED STATES PATENT AND TRADEMARK OFFICE

Commissioner for Patents
United States Patent and Trademark Office
P.O. Box 1450
Alexandria, VA 22313-1450
www.uspto.gov

OIPE
AUG 07 2008
PATENT & TRADEMARK OFFICE

ALLIANCE SEMICONDUCTOR CORPORATION
2575 AUGUSTINE DRIVE
SANTA CLARA CA 95054

COPY MAILED
JUL 30 2008

COMPLETED

In re Patent No. 5,375,097
Issue Date: 12/20/1994
Application No. 08/084,010
Filed: 06/29/1993
Attorney Docket No. ALNC01500

DECISION ON PETITION

This is a decision on the petition under 37 CFR 1.182, filed July 14, 2008, requesting issuance of duplicate Letters Patent for the above-identified patent.

The petition is **dismissed**. Any request for reconsideration must be filed within TWO MONTHS of the date of this decision and include a cover letter indicating "Renewed Petition under 37 CFR 1.182." No additional fee is required.

The present petition was signed by Lou P. Yang, V.P. of Business Development. An assignment to INTEGRATED SILICON SOLUTION, INC. is of record. However, petitioners did not submit a Statement under 37 CFR 3.73(b) establishing the right of the assignee to take action in this matter.

Pursuant to 37 CFR 3.73:

(a) The inventor is presumed to be the owner of a patent application, and any patent that may issue therefrom, unless there is an assignment. The original applicant is presumed to be the owner of a trademark application or registration, unless there is an assignment.

(b)

(1) In order to request or take action in a patent or trademark matter, the assignee must establish its ownership of the patent or trademark property of paragraph (a) of this section to the satisfaction of the Director. The establishment of ownership by the assignee may be combined with the paper that requests or takes the action. Ownership is established by submitting to the Office a signed statement identifying the assignee, accompanied by either:

(i) Documentary evidence of a chain of title from the original owner to the assignee (e.g., copy of an executed assignment). For trademark matters only, the documents submitted to establish ownership may be required to be recorded pursuant to § 3.11 in the assignment records of the Office as a condition to permitting the assignee to take action in a matter pending before the Office. For patent matters only, the submission of the documentary evidence must be accompanied by a statement affirming that the documentary evidence of the chain of title from the original owner to the assignee was or concurrently is being submitted for recordation pursuant to § 3.11; or

(ii) A statement specifying where documentary evidence of a chain of title from the original owner to the assignee is recorded in the assignment records of the Office (e.g., reel and frame number).

(2) The submission establishing ownership must show that the person signing the submission is a person authorized to act on behalf of the assignee by:

(i) Including a statement that the person signing the submission is authorized to act on behalf of the assignee; or

(ii) Being signed by a person having apparent authority to sign on behalf of the assignee, e.g., an officer of the assignee.

It appears that Mr. Yang is acting on behalf of the assignee. However, the assignee has not established its ownership of the patent to the satisfaction of the Director in accordance with 37 CFR 3.73. Consequently, the Office will not address the merits of the present petition.

The Office further notes that it appears that the address submitted in the petition is different from the address of record. As a one-time courtesy, the Office will mail this decision to Mr. Yang at the address indicated in the petition. However, all future correspondence will continue to be mailed to the correspondence address of record indicated above, absent a change of correspondence signed by the appropriate person(s). The Office reminds petitioner that an assignee of the entire interest may change the correspondence address if such assignee has taken action in the application in accordance with 37 CFR 3.71. See 37 CFR 1.33.

Further correspondence with respect to this matter should be addressed as follows:

By mail: Mail Stop Petition
Commissioner for Patents
P.O. Box 1450
Alexandria, VA 22313-1450

By fax: (571) 273-8300
ATTN: Office of Petitions

By hand: Customer Service Window
Randolph Building
401 Dulany Street
Alexandria, VA 22314

Telephone inquiries related to this decision should be directed to the undersigned at (571) 272-3211.

C. T. Donnell

Christina Tartera Donnell
Senior Petitions Attorney
Office of Petitions

Enclosure: Form PTO/SB/96

Cc: Lou P. Yang, V.P. Business Development
1940 Zanker Road
San Jose, CA 95112-4216

PTO/SB/96 (01-08)
Approved for use through 07/31/2008. OMB 0651-0031
U.S. Patent and Trademark Office; U.S. DEPARTMENT OF COMMERCE
Under the Paperwork Reduction Act of 1995, no persons are required to respond to a collection of information unless it displays a valid OMB control number.

STATEMENT UNDER 37 CFR 3.73(b)

Applicant/Patent Owner: _____

Application No./Patent No.: _____ Filed/Issue Date: _____

Entitled:

_____, a _____
(Name of Assignee) (Type of Assignee, e.g., corporation, partnership, university, government agency, etc.)

states that it is:

1. ☐ the assignee of the entire right, title, and interest; or

2. ☐ an assignee of less than the entire right, title and interest
(The extent (by percentage) of its ownership interest is _____%)

in the patent application/patent identified above by virtue of either:

A. ☐ An assignment from the inventor(s) of the patent application/patent identified above. The assignment was recorded in the United States Patent and Trademark Office at Reel _____, Frame _____, or for which a copy thereof is attached.

OR

B. ☐ A chain of title from the inventor(s), of the patent application/patent identified above, to the current assignee as follows:

1. From: _____ To: _____
The document was recorded in the United States Patent and Trademark Office at
Reel _____, Frame _____, or for which a copy thereof is attached.

2. From: _____ To: _____
The document was recorded in the United States Patent and Trademark Office at
Reel _____, Frame _____, or for which a copy thereof is attached.

3. From: _____ To: _____
The document was recorded in the United States Patent and Trademark Office at
Reel _____, Frame _____, or for which a copy thereof is attached.

☐ Additional documents in the chain of title are listed on a supplemental sheet.

☐ As required by 37 CFR 3.73(b)(1)(i), the documentary evidence of the chain of title from the original owner to the assignee was, or concurrently is being, submitted for recordation pursuant to 37 CFR 3.11.

[NOTE: A separate copy (*i.e.*, a true copy of the original assignment document(s)) must be submitted to Assignment Division in accordance with 37 CFR Part 3, to record the assignment in the records of the USPTO. See MPEP 302.08]

The undersigned (whose title is supplied below) is authorized to act on behalf of the assignee.

Signature	Date
Printed or Typed Name	Telephone Number
Title	

This collection of information is required by 37 CFR 3.73(b). The information is required to obtain or retain a benefit by the public which is to file (and by the USPTO to process) an application. Confidentiality is governed by 35 U.S.C. 122 and 37 CFR 1.11 and 1.14. This collection is estimated to take 12 minutes to complete, including gathering, preparing, and submitting the completed application form to the USPTO. Time will vary depending upon the individual case. Any comments on the amount of time you require to complete this form and/or suggestions for reducing this burden, should be sent to the Chief Information Officer, U.S. Patent and Trademark Office, U.S. Department of Commerce, P.O. Box 1450, Alexandria, VA 22313-1450. DO NOT SEND FEES OR COMPLETED FORMS TO THIS ADDRESS. SEND TO: **Commissioner for Patents, P.O. Box 1450, Alexandria, VA 22313-1450.**

If you need assistance in completing the form, call 1-800-PTO-9199 and select option 2.

Privacy Act Statement

The **Privacy Act of 1974 (P.L. 93-579)** requires that you be given certain information in connection with your submission of the attached form related to a patent application or patent. Accordingly, pursuant to the requirements of the Act, please be advised that: (1) the general authority for the collection of this information is 35 U.S.C. 2(b)(2); (2) furnishing of the information solicited is voluntary; and (3) the principal purpose for which the information is used by the U.S. Patent and Trademark Office is to process and/or examine your submission related to a patent application or patent. If you do not furnish the requested information, the U.S. Patent and Trademark Office may not be able to process and/or examine your submission, which may result in termination of proceedings or abandonment of the application or expiration of the patent.

The information provided by you in this form will be subject to the following routine uses:

1. The information on this form will be treated confidentially to the extent allowed under the Freedom of Information Act (5 U.S.C. 552) and the Privacy Act (5 U.S.C 552a). Records from this system of records may be disclosed to the Department of Justice to determine whether disclosure of these records is required by the Freedom of Information Act.
2. A record from this system of records may be disclosed, as a routine use, in the course of presenting evidence to a court, magistrate, or administrative tribunal, including disclosures to opposing counsel in the course of settlement negotiations.
3. A record in this system of records may be disclosed, as a routine use, to a Member of Congress submitting a request involving an individual, to whom the record pertains, when the individual has requested assistance from the Member with respect to the subject matter of the record.
4. A record in this system of records may be disclosed, as a routine use, to a contractor of the Agency having need for the information in order to perform a contract. Recipients of information shall be required to comply with the requirements of the Privacy Act of 1974, as amended, pursuant to 5 U.S.C. 552a(m).
5. A record related to an International Application filed under the Patent Cooperation Treaty in this system of records may be disclosed, as a routine use, to the International Bureau of the World Intellectual Property Organization, pursuant to the Patent Cooperation Treaty.
6. A record in this system of records may be disclosed, as a routine use, to another federal agency for purposes of National Security review (35 U.S.C. 181) and for review pursuant to the Atomic Energy Act (42 U.S.C. 218(c)).
7. A record from this system of records may be disclosed, as a routine use, to the Administrator, General Services, or his/her designee, during an inspection of records conducted by GSA as part of that agency's responsibility to recommend improvements in records management practices and programs, under authority of 44 U.S.C. 2904 and 2906. Such disclosure shall be made in accordance with the GSA regulations governing inspection of records for this purpose, and any other relevant (*i.e.*, GSA or Commerce) directive. Such disclosure shall not be used to make determinations about individuals.
8. A record from this system of records may be disclosed, as a routine use, to the public after either publication of the application pursuant to 35 U.S.C. 122(b) or issuance of a patent pursuant to 35 U.S.C. 151. Further, a record may be disclosed, subject to the limitations of 37 CFR 1.14, as a routine use, to the public if the record was filed in an application which became abandoned or in which the proceedings were terminated and which application is referenced by either a published application, an application open to public inspection or an issued patent.
9. A record from this system of records may be disclosed, as a routine use, to a Federal, State, or local law enforcement agency, if the USPTO becomes aware of a violation or potential violation of law or regulation.

UNITED STATES PATENT AND TRADEMARK OFFICE

Commissioner for Patents
United States Patent and Trademark Office
P.O. Box 1450
Alexandria, VA 22313-1450
www.uspto.gov

Integrated Silicon Solutions, Inc.
1940 Zanker Road
San Jose CA 95112

COPY MAILED
SEP 18 2008

In re Patent No. 5,375,097
Issue Date: 12/20/1994
Application No. 08/084,010
Filed: 06/29/1993
Attorney Docket No. ALNC01500

DECISION ON PETITION

This is a decision on the renewed petition under 37 CFR 1.182, filed September 11, 2008, requesting issuance of duplicate Letters Patent for the above-identified patent.

The petition is GRANTED.

The Office of Data Management is directed to issue a duplicate Letters Patent.

Telephone inquiries concerning this decision may be directed to the undersigned at (571) 272-3211. Inquiries regarding the issuance of a duplicate Letters Patent may be directed to Niomi Farmer, Office of Data Management at (703) 308-9250, Ext. 119.

A copy of this decision is being faxed to the Office of Data Management for issuance of a duplicate Letters Patent.

C. T. Donnell

Christina Tartera Donnell
Senior Petitions Attorney
Office of Petitions

cc: Niomi Farmer, Office of Data Management, South Tower, 8th Floor, Room C23 (Fax No. (571) 270-9937)

IN THE UNITED STATES PATENT AND TRADEMARK OFFICE

In Re Patent of: Sung C. PARK | Confirmation No.: 7161

Patent No: 5,351,223 | Issue Date: 9/27/1994

Serial No: 08/085,022 | Filed: 6/30/1993

Group Art Unit: 2513 | Examiner: Young, Wayne R.

For: TRACKING INDUCTION SYSTEM AND METHOD FOR OPTICAL DISC DRIVERS

Honorable Commissioner of Patents and Trademarks
Washington, D.C. 20231

COMMUNICATION REGARDING PETITION TO ACCEPT UNINTENTIONALLY DELAYED PAYMENT OF MAINTENANCE FEE IN AN EXPIRED PATENT (37 CFR 1.378(C))

The payment of the maintenance fee for the above-referenced patent application, U.S. Patent No. 5,351,223 was unintentionally delayed, resulting in an expired patent.

1. There are three periods to be considered during the evaluation of a petition under 35 CFR 1.137(b):

(1) The delay in reply that originally resulted in the abandonment;

(2) The delay in filing an initial petition pursuant to 35 CFR 1.137(b) to revive the petition; and

(3) The delay in filing a grantable petition pursuant to 37 CFR 1.137(b) to revive the application.

The question under 37 CFR 1.137(b) is whether the entire delay on the part

of the party having the right or authority to reply to avoid abandonment (or not reply) was unintentional.

For all three of these periods the delay was unintentional by both the Patentee and the undersigned attorney. Accordingly, Patentee respectfully requests reinstatement of the above identified patent.

As background, the Patentee asked Sawyer Law Group to file a Power of Attorney as well as a statement under 37 CFR 3.73b in the office and to take over representation of the patent on or about July 2007. Patentee had recently acquired the patent and wanted it kept in force. Although the POA and a statement under 37 CFR 3.73b were prepared, they were never filed or docketed by the responsible party. The responsible party for filing and docketing this item was Ms. Nikia McNillion, a lead paralegal/office manager hired by Sawyer Law Group in January 2007. Ms. McNillion was hired on the belief that she was an experienced and knowledgeable IP manager with extensive prosecution, administrative and docketing experience. Ms. McNillion began assisting with overflow work under the supervision of the managing attorney and lead paralegal. Gradually, Ms. McNillion assumed full control of docketing and filing processes. By mid-2007 Ms. McNillion replaced the lead paralegal filing clerk. With Ms. McNillion's reputed background and experience, the managing attorney of Sawyer Law Group had every confidence that Ms. McNillion could carry out her duties in a timely and expedient manner.

By 2008 it became evident that Ms. McNillion was not carrying out her duties as contracted. Not only was Ms. McNillion not maintaining Sawyer Law Group's

client service standards, but she was actively maneuvering against the Firm, the details of which are the subject of the attached Complaint, Case No. 180CV129432 filed in Superior Court of California. Recently orders against her have been obtained in which a default judgement has been entered (copy attached) and Sawyer Law Group is currently seeking monetary damages from her. Ms. McNillion's actions affect the present case in two ways, explained as follows:

Firstly, the undersigned attorney asserts that Ms. McNillion intentionally and maliciously altered successful existing procedures, without authority or approval by the managing attorney. Ms Jackie Tanda who worked for Sawyer Law Group for over ten years as the docketing paralegal and transferred responsibility for the docketing processes to Ms McNillion. Ms. Tanda came back to work for Sawyer Law Group on or about January 11, 2010. One of her responsibilities was to audit the docketing system upon her return. As shown by her attached declaration, from the audit Ms. Tanda it is clear that Ms McNillion significantly altered the docketing system and changed procedures associated therewith. Specifically, Ms. McNillion stopped docketing items in the Sawyer Law Group shortly after Ms. Tanda left the Sawyer Law Group.

Secondly, by altering the docketing system and its associated procedures, Ms. McNillion maliciously and intentionally damaged the Firm. With regard to the maintenance fee due for the above identified patent Ms McNillion did not enter this due date in the docketing system. In so doing, neither the Patentee nor the undersigned attorney realized that the maintenance fee was due and/or had not

been paid. Therefore, the undersigned attorney only became aware that the maintenance fee had not been paid on or about June 23, 2010.

By the attached complaint and orders, it has been established that Ms. McNillion organized an exodus of staff from the Firm for the purposes of establishing her own IP administration service. This exodus made it difficult to hire competent people and significantly affected the operation of the Firm. It took over 18 months from the time Ms. McNillion left the Firm, to hire competent administrative staff. Ms. McNillion pilfered the Firm's client list, document templates and records database and attempted to solicit the Firm's clients on her own.

By Ms. McNillion not performing the docketing in a competent manner, in many cases, as well as in this particular case, matters were not filed and deadlines were not docketed. The undersigned attorney did not become aware of many of these issues until they were brought to his attention by clients or others. In this instance the expiration of the above identified patent due to nonpayment of the maintenance fee came to the undersigned attorney's attention via a correspondence from the Patentee on or about June 23, 2010 (copy of email attached). In fact we have not been able to locate the original physical file due to Ms. McNillion's conduct.

It would be a manifestly unjust for the Patentee to lose their rights in this patent due to Ms. McNillion's conduct. The Patentee and the undersigned attorney never had any intention to abandon this patent and had every intention that the patent be kept in force as shown by the email dated June 23, 2010. Accordingly, as before mentioned, it would be manifestly unjust to the Patentee to not reinstate the

above-identified patent of the unintentionally delayed payment of the maintenance fees based upon Ms. McNillion's conduct.

Accordingly, the Patentee respectfully requests that this petition to revive be granted for the unintentionally delayed payment of the maintenance fees based on the above-identified reasons. If the Examiner has any questions or would like to discuss this matter, please contact Patentee's attorney at the telephone number indicated below.

Respectfully submitted,

7/27/2010

/Joseph A. Sawyer, Jr./
Joseph A. Sawyer, Jr.
Attorney for Applicants
Reg. No.: 30,801

Sawyer Law Group, P.C.
2465 E. Bayshore Road, Suite 406
Palo Alto, CA 94303
(650) 493-4540
(650) 493-4549 (fax)
sawyer@sawyerlawgroup.com

UNITED STATES PATENT AND TRADEMARK OFFICE

OIPE IAP21
FEB 25 2009
PATENT & TRADEMARK OFFICE

Commissioner for Patents
United States Patent and Trademark Office
P.O. Box 1450
Alexandria, VA 22313-1450
www.uspto.gov

MAILED

FEB 11 2009

OFFICE OF PETITIONS

Paper No. 20

COMPLETED

JAYADEEP R. DESHMUKH
C/O MICROPYRETICS HEATERS INTERNATIONAL, INC., 613 REDNA TERRACE
CINCINNATI, OH 45215

In re Patent No. 5,560,846 :
Issue Date: October 1, 1996 :
Application No. 08/085,313 : ON PETITION
Filed: June 29, 1993 :
Attorney Docket No. 58100502 :

This is a decision on the petition under 37 CFR 1.378(c), filed October 8 2008, to accept the delayed payment of a maintenance fee for the above-identified patent.

The petition is **DISMISSED**.

A grantable petition to accept the unintentionally delayed payment of a maintenance fee under 35 U.S.C. 41(c) and 37 CFR 1.378(c) must be accompanied by: (1) a statement that the delay was unintentional; (2) payment of the appropriate maintenance fee, unless previously submitted; (3) payment of the surcharge set forth in 37 CFR 1.20(i)(2). This petition lacks items (1) and (3) above.

With regards to item (1), the statement of unintentional delay cannot be accepted because it does not meet the requisite of 37 CFR 1.378(d). 37 CFR 1.378(d) states that any petition under this section must be signed by an attorney or agent registered to practice before the U.S. Patent and Trademark Office, or by the patentee, the assignee, or other party of interest. Petitioner has not established that the person who signed the petition form, Erin Rucker, is authorized to sign on behalf of the patentee, assignee, or other party of interest.

With regards to item (3), petitioner indicated in the above petition that the 3 ½ year maintenance and surcharge fees totaling $2,130 are being paid. However, the 3 ½ and 7 ½ year maintenance fees were previously paid on their respective anniversary. The total fees required to reinstate this patent on October 8, 2008 is $3,695; $2,055 for the 11 ½ year maintenance fee and $1,640 for the petition surcharge. The $2,130 fees submitted are deficient by $1,565.

Further, the file does not indicate a change of address has been submitted, although the address given on the petition differs from the address of record. If appropriate, a change of address should be filed in accordance with MPEP 601.03. A courtesy copy of this decision is being mailed to the address given on the petition; however, the Office will mail all future correspondence solely to the address of record.

If reconsideration of this decision is desired, a petition for reconsideration under 37 CFR 1.378(e) must be filed within TWO (2) MONTHS from the mail date of this decision. No extension of this two-month time limit can be granted under 37 CFR 1.136(a) or (b). This is **not** a final agency action within the meaning of 5 U.S.C. § 704.

Any petition for reconsideration of this decision must be accompanied by the petition fee of $400 as set forth in 37 CFR 1.17(f). The petition for reconsideration must include the lacking item(s) noted above, since, after a decision on the petition for reconsideration, no further reconsideration or review of the matter will be undertaken by the Director.

If petitioner does not wish to pursue reinstatement of this expired patent, petitioner may request a refund of the $2,130 fee submitted with the petition. The request should be made in writing and addressed to: Mail Stop 16, Director of the U.S. Patent and Trademark Office, P. O. Box 1450, Alexandria, VA 22313-1450. A copy of this decision should accompany petitioner's request.

Further correspondence with respect to this matter should be addressed as follows:

By Mail: Mail Stop PETITION
Commissioner for Patents
Post Office Box 1450
Alexandria, VA 22313-1450

By hand: U. S. Patent and Trademark Office
Customer Service Window, Mail Stop Petitions
Randolph Building
401 Dulany Street
Alexandria, VA 22314

The centralized facsimile number is (571) 273-8300.

Telephone inquiries should be directed to Alicia Kelley at (571) 272-6059.

Carl Friedman
Petitions Examiner
Office of Petitions

cc: ERIN RUCKER
750 REDNA TERRACE
CINCINNATI, OH 45215

UNITED STATES PATENT AND TRADEMARK OFFICE

Commissioner for Patents
United States Patent and Trademark Office
P.O. Box 1450
Alexandria, VA 22313-1450
www.uspto.gov

MCANDREWS HELD & MALLOY, LTD.
500 WEST MADISON STREET
SUITE 3400
CHICAGO IL 60661

COPY MAILED
FEB 16 2010

In re Patent No. 5,428,699 :
Issue Date: June 27, 1995 :
Application No. 08/086,014 :
Filed: July 2, 1993 :
Attorney Docket No. AMS-3135-US :

NOTICE

This is a notice regarding your request for acceptance of a fee deficiency submission under 37 CFR 1.28 received on November 19, 2009.

The Office no longer investigates or rejects original or reissue patent under 37 CFR 1.56. **1098 Off. Gaz. Pat. Office 502 (January 3, 1989)**. Therefore, nothing in this Notice is intended to imply that an investigation was done.

Your fee deficiency submission under 37 CFR 1.28 is hereby **ACCEPTED**.

It is noted that since the filing of the above request, a power of attorney has been accepted on January 28, 2010. Therefore, this request is being forwarded to the above address of record rather than the address on the request submitted on November 19, 2009.

This patent is no longer entitled to small entity status. Accordingly, all future fees paid in this patent must be paid at the large entity rate.

Inquiries related to this communication should be directed to the undersigned at (571) 272-3208.

/KOC/
Karen Creasy
Petitions Examiner
Office of Petitions

Approved for use through 04/30/2009. OMB 0651-0016
U.S. Patent and Trademark Office: U.S. DEPARTMENT OF COMMERCE
Under the Paperwork Reduction Act of 1995, no persons are required to respond to a collection of information unless it displays valid OMB control number.

PETITION TO ACCEPT UNINTENTIONALLY DELAYED PAYMENT OF MAINTENANCE FEE IN AN EXPIRED PATENT (37 CFR 1.378(c))

Patent Number	Issue Date (YYYY-MM-DD)	Application Number	Filing Date (YYYY-MM-DD)	Docket Number (if applicable)
5,358,886	1994-10-25	08/086,487	1993-07-01	LLC-2186

CAUTION: Maintenance fee (and surcharge, if any) payment must correctly identify: (1) the patent number and (2) the application number of the actual U.S. application leading to issuance of that patent to ensure the fee(s) is/are associated with the correct patent. 37 CFR 1.366(c) and (d).

SMALL ENTITY
☐ Patentee claims, or has previously claimed, small entity status. See 37 CFR 1.27.

LOSS OF ENTITLEMENT TO SMALL ENTITY STATUS
☐ Patentee is no longer entitled to small entity status. See 37 CFR 1.27(g)

NOT Small Entity			Small Entity		
	Fee	Code		Fee	Code
○	3 ½ year	(1551)	○	3 ½ year	(2551)
○	7 ½ year	(1552)	○	7 ½ year	(2552)
◉	11 ½ year	(1553)	○	11 ½ year	(2553)

SURCHARGE
The surcharge required by 37 CFR 1.20(i)(2) (Fee Code 1558) must be paid as a condition of accepting unintentionally delayed payment of the maintenance fee.

MAINTENANCE FEE (37 CFR 1.20(e)-(g))
The appropriate maintenance fee must be submitted with this petition.

STATEMENT
THE UNDERSIGNED CERTIFIES THAT THE DELAY IN PAYMENT OF THE MAINTENANCE FEE TO THIS PATENT WAS UNINTENTIONAL

PETITIONER(S) REQUEST THAT THE DELAYED PAYMENT OF THE MAINTENANCE FEE BE ACCEPTED AND THE PATENT REINSTATED

THIS PORTION MUST BE COMPLETED BY THE SIGNATORY OR SIGNATORIES

37 CFR 1.378(d) states: "Any petition under this section must be signed by an attorney or agent registered to practice before the Patent and Trademark Office, or by the patentee, the assignee, or other party in interest."

I certify, in accordance with 37 CFR 1.4(d)(4) that I am

◉ An attorney or agent registered to practice before the Patent and Trademark Office

○ A sole patentee

○ A joint patentee; I certify that I am authorized to sign this submission on behalf of all the other patentees.

○ A joint patentee; all of whom are signing this e-petition

○ The assignee of record of the entire interest

Patent Practitioner			
A signature of the applicant or representative is required in accordance with 37 CFR 1.33 and 10.18. Please see 37 CFR 1.4(d) for the form of the signature			
Signature	/Christopher P. Maiorana/	Date (YYYY-MM-DD)	2007-03-30
Name	Christopher P. Maiorana	Registration Number	42829

This collection of information is required by 37 CFR 1.378(c). The information is required to obtain or retain a benefit by the public which is to file (and by the USPTO to process) an application. Confidentiality is governed by 35 U.S.C. 122 and 37 CFR 1.11 and 1.14. This collection is estimated to take 1 hour to complete, including gathering, preparing, and submitting the completed application form to the USPTO. Time will vary depending upon the individual case. Any comments on the amount of time you require to complete this form and/ or suggestions for reducing this burden, should be sent to the Chief Information Officer, U.S. Patent and Trademark Office, U.S. Department of Commerce, P.O. Box 1450, Alexandria, VA 22313-1450. DO NOT SEND FEES OR COMPLETED FORMS TO THIS ADDRESS. **This form can only be used when in conjunction with EFS-Web. If this form is mailed to the USPTO, it may cause delays in reinstating the patent.**

Privacy Act Statement

The Privacy Act of 1974 (P.L. 93-579) requires that you be given certain information in connection with your submission of the attached form related to a patent application or patent. Accordingly, pursuant to the requirements of the Act, please be advised that: (1) the general authority for the collection of this information is 35 U.S.C. 2(b)(2); (2) furnishing of the information solicited is voluntary; and (3) the principal purpose for which the information is used by the U.S. Patent and Trademark Office is to process and/or examine your submission related to a patent application or patent. If you do not furnish the requested information, the U.S. Patent and Trademark Office may not be able to process and/or examine your submission, which may result in termination of proceedings or abandonment of the application or expiration of the patent.

The information provided by you in this form will be subject to the following routine uses:

1. The information on this form will be treated confidentially to the extent allowed under the Freedom of Information Act (5 U.S.C. 552) and the Privacy Act (5 U.S.C. 552a). Records from this system of records may be disclosed to the Department of Justice to determine whether the Freedom of Information Act requires disclosure of these record s.

2. A record from this system of records may be disclosed, as a routine use, in the course of presenting evidence to a court, magistrate, or administrative tribunal, including disclosures to opposing counsel in the course of settlement negotiations.

3. A record in this system of records may be disclosed, as a routine use, to a Member of Congress submitting a request involving an individual, to whom the record pertains, when the individual has requested assistance from the Member with respect to the subject matter of the record.

4. A record in this system of records may be disclosed, as a routine use, to a contractor of the Agency having need for the information in order to perform a contract. Recipients of information shall be required to comply with the requirements of the Privacy Act of 1974, as amended, pursuant to 5 U.S.C. 552a(m).

5. A record related to an International Application filed under the Patent Cooperation Treaty in this system of records may be disclosed, as a routine use, to the International Bureau of the World Intellectual Property Organization, pursuant to the Patent Cooperation Treaty.

6. A record in this system of records may be disclosed, as a routine use, to another federal agency for purposes of National Security review (35 U.S.C. 181) and for review pursuant to the Atomic Energy Act (42 U.S.C. 218(c)).

7. A record from this system of records may be disclosed, as a routine use, to the Administrator, General Services, or his/her designee, during an inspection of records conducted by GSA as part of that agency's responsibility to recommend improvements in records management practices and programs, under authority of 44 U.S.C. 2904 and 2906. Such disclosure shall be made in accordance with the GSA regulations governing inspection of records for this purpose, and any other relevant (i.e., GSA or Commerce) directive. Such disclosure shall not be used to make determinations about individuals.

8. A record from this system of records may be disclosed, as a routine use, to the public after either publication of the application pursuant to 35 U.S.C. 122(b) or issuance of a patent pursuant to 35 U.S.C. 151. Further, a record may be disclosed, subject to the limitations of 37 CFR 1.14, as a routine use, to the public if the record was filed in an application which became abandoned or in which the proceedings were terminated and which application is referenced by either a published application, an application open to public inspections or an issued patent.

9. A record from this system of records may be disclosed, as a routine use, to a Federal, State, or local law enforcement agency, if the USPTO becomes aware of a violation or potential violation of law or regulation.

UNITED STATES PATENT AND TRADEMARK OFFICE

Commissioner for Patents
United States Patent and Trademark Office
P.O. Box 1450
Alexandria, VA 22313-1450
www.uspto.gov

In re Patent No. 5358886
Issue Date: October 25,1994
Application No. 08086487
Filed: July 1,1993
Attorney Docket No. LLC2186

:

:DECISION GRANTING PETITION
:UNDER 37 CFR 1.378(c)

:

This is a decision on the electronic petition, filed March 30,2007 ,under 37 CFR 1.378(c) to accept the unintentionally delayed payment of the 11.5 year maintenance fee for the above-identified patent.

The petition is GRANTED.

The maintenance fee is accepted, and the above-identified patent reinstated as of March 30,2007 . This decision also constitutes notice that the fee has been accepted. An electronic copy of the petition and this decision has been created as an entry in an Image File Wrapper. Nevertheless, petitioner should print and retain an independent copy

Telephone inquires related to this electronic decision should be directed to the Electronic Business Center at 1-866-217-9197.

UNITED STATES PATENT AND TRADEMARK OFFICE

Commissioner for Patents
United States Patent and Trademark Office
P.O. Box 1450
Alexandria, VA 22313-1450
www.uspto.gov

DEC 14 2007

MATTHEWS, COLLINS, SHEPHERD & GOULD, PA
SUITE 306
100 THANET CIRCLE
PRINCETON, NJ 08540-3662

In re Application of	:
Richard Gregory	:
Serial No.: 08/087,132	: PETITION DECISION
Filed: July 2, 1993	:
Attorney Docket No.: IG1012CN	:

This is in response to the petition under 37 CFR 1.181, filed November 26, 2004, for withdrawal of Express Abandonment inadvertently filed in this application.

A review of the file history shows that the examiner mailed a Final Office action to applicant on October 14, 2004, setting a three month shortened statutory period for reply. Following a telephone interview with the examiner on November 4, 2004, applicant prepared and filed an amendment on November 8, 2004, responding to the rejection. A letter of Express Abandonment was also prepared and inadvertently filed in this application on the same day, but was intended for a companion application. Upon discovery of the error applicant took appropriate steps to correct the error by contacting the examiner and by filing a request that the letter of Express Abandonment be disregarded. However, due to recent paper processing changes, letters of Express Abandonment are processed in the mail receipt area, not in the Technology Centers. Thus a letter acknowledging the Express Abandonment was mailed to applicant on November 16, 2004. This petition was then filed on November 26, 2004, with verified statements of how the error occurred. In view of the statements and clear inadvertent error on applicant's part as evidenced by a complete reply to the Office action filed the same day as the letter of Express Abandonment, the Notice of Abandonment is withdrawn and the application restored to pending status with the mailing of this decision.

The petition is **GRANTED**.

The application will be forwarded to the examiner for consideration of the amendment filed November 4, 2004.

Should there be any questions about this decision please contact William R. Dixon, Jr., by letter addressed to Director, TC 1600, P.O. Box 1450, Alexandria, VA 22313-1450, or by telephone at 571-272-0519 or by facsimile sent to the general Office facsimile number.

Bruce M. Kisliuk
Director, Technology Center 1600

PTO/SB/66 (03-09)
Approved for use through 03/31/2012. OMB 0651-0016
U.S. Patent and Trademark Office: U.S. DEPARTMENT OF COMMERCE
Under the Paperwork Reduction Act of 1995, no persons are required to respond to a collection of information unless it displays valid OMB control number.

PETITION TO ACCEPT UNINTENTIONALLY DELAYED PAYMENT OF MAINTENANCE FEE IN AN EXPIRED PATENT (37 CFR 1.378(c))

Patent Number	Issue Date (YYYY-MM-DD)	Application Number	Filing Date (YYYY-MM-DD)	Docket Number (if applicable)
5,489,001	1996-02-06	08/087,269	1993-07-08	GIAN 134

CAUTION: Maintenance fee (and surcharge, if any) payment must correctly identify: (1) the patent number and (2) the application number of the actual U.S. application leading to issuance of that patent to ensure the fee(s) is/are associated with the correct patent. 37 CFR 1.366(c) and (d).

SMALL ENTITY
☒ Patentee claims, or has previously claimed, small entity status. See 37 CFR 1.27.

LOSS OF ENTITLEMENT TO SMALL ENTITY STATUS
☐ Patentee is no longer entitled to small entity status. See 37 CFR 1.27(g)

NOT Small Entity			Small Entity		
	Fee	Code		Fee	Code
○	3 ½ year	(1551)	○	3 ½ year	(2551)
○	7 ½ year	(1552)	○	7 ½ year	(2552)
○	11 ½ year	(1553)	◉	11 ½ year	(2553)

SURCHARGE
The surcharge required by 37 CFR 1.20(i)(2) (Fee Code 1558) must be paid as a condition of accepting unintentionally delayed payment of the maintenance fee.

MAINTENANCE FEE (37 CFR 1.20(e)-(g))
The appropriate maintenance fee must be submitted with this petition.

STATEMENT
THE UNDERSIGNED CERTIFIES THAT THE DELAY IN PAYMENT OF THE MAINTENANCE FEE TO THIS PATENT WAS UNINTENTIONAL

PETITIONER(S) REQUEST THAT THE DELAYED PAYMENT OF THE MAINTENANCE FEE BE ACCEPTED AND THE PATENT REINSTATED

THIS PORTION MUST BE COMPLETED BY THE SIGNATORY OR SIGNATORIES

37 CFR 1.378(d) states: "Any petition under this section must be signed by an attorney or agent registered to practice before the Patent and Trademark Office, or by the patentee, the assignee, or other party in interest."

I certify, in accordance with 37 CFR 1.4(d)(4) that I am

◉ An attorney or agent registered to practice before the Patent and Trademark Office

○ A sole patentee

○ A joint patentee; I certify that I am authorized to sign this submission on behalf of all the other patentees.

○ A joint patentee; all of whom are signing this e-petition

○ The assignee of record of the entire interest

Patent Practitioner			
A signature of the applicant or representative is required in accordance with 37 CFR 1.33 and 10.18. Please see 37 CFR 1.4(d) for the form of the signature			
Signature	/Steven M. Rabin/	Date (YYYY-MM-DD)	2009-09-30
Name	Steven M. Rabin	Registration Number	29102

This collection of information is required by 37 CFR 1.378(c). The information is required to obtain or retain a benefit by the public which is to file (and by the USPTO to process) an application. Confidentiality is governed by 35 U.S.C. 122 and 37 CFR 1.11 and 1.14. This collection is estimated to take 1 hour to complete, including gathering, preparing, and submitting the completed application form to the USPTO. Time will vary depending upon the individual case. Any comments on the amount of time you require to complete this form and/ or suggestions for reducing this burden, should be sent to the Chief Information Officer, U.S. Patent and Trademark Office, U.S. Department of Commerce, P.O. Box 1450, Alexandria, VA 22313-1450. DO NOT SEND FEES OR COMPLETED FORMS TO THIS ADDRESS. **This form can only be used when in conjunction with EFS-Web. If this form is mailed to the USPTO, it may cause delays in reinstating the patent.**

Privacy Act Statement

The Privacy Act of 1974 (P.L. 93-579) requires that you be given certain information in connection with your submission of the attached form related to a patent application or patent. Accordingly, pursuant to the requirements of the Act, please be advised that: (1) the general authority for the collection of this information is 35 U.S.C. 2(b)(2); (2) furnishing of the information solicited is voluntary; and (3) the principal purpose for which the information is used by the U.S. Patent and Trademark Office is to process and/or examine your submission related to a patent application or patent. If you do not furnish the requested information, the U.S. Patent and Trademark Office may not be able to process and/or examine your submission, which may result in termination of proceedings or abandonment of the application or expiration of the patent.

The information provided by you in this form will be subject to the following routine uses:

1. The information on this form will be treated confidentially to the extent allowed under the Freedom of Information Act (5 U.S.C. 552) and the Privacy Act (5 U.S.C. 552a). Records from this system of records may be disclosed to the Department of Justice to determine whether the Freedom of Information Act requires disclosure of these records.

2. A record from this system of records may be disclosed, as a routine use, in the course of presenting evidence to a court, magistrate, or administrative tribunal, including disclosures to opposing counsel in the course of settlement negotiations.

3. A record in this system of records may be disclosed, as a routine use, to a Member of Congress submitting a request involving an individual, to whom the record pertains, when the individual has requested assistance from the Member with respect to the subject matter of the record.

4. A record in this system of records may be disclosed, as a routine use, to a contractor of the Agency having need for the information in order to perform a contract. Recipients of information shall be required to comply with the requirements of the Privacy Act of 1974, as amended, pursuant to 5 U.S.C. 552a(m).

5. A record related to an International Application filed under the Patent Cooperation Treaty in this system of records may be disclosed, as a routine use, to the International Bureau of the World Intellectual Property Organization, pursuant to the Patent Cooperation Treaty.

6. A record in this system of records may be disclosed, as a routine use, to another federal agency for purposes of National Security review (35 U.S.C. 181) and for review pursuant to the Atomic Energy Act (42 U.S.C. 218(c)).

7. A record from this system of records may be disclosed, as a routine use, to the Administrator, General Services, or his/her designee, during an inspection of records conducted by GSA as part of that agency's responsibility to recommend improvements in records management practices and programs, under authority of 44 U.S.C. 2904 and 2906. Such disclosure shall be made in accordance with the GSA regulations governing inspection of records for this purpose, and any other relevant (i.e., GSA or Commerce) directive. Such disclosure shall not be used to make determinations about individuals.

8. A record from this system of records may be disclosed, as a routine use, to the public after either publication of the application pursuant to 35 U.S.C. 122(b) or issuance of a patent pursuant to 35 U.S.C. 151. Further, a record may be disclosed, subject to the limitations of 37 CFR 1.14, as a routine use, to the public if the record was filed in an application which became abandoned or in which the proceedings were terminated and which application is referenced by either a published application, an application open to public inspections or an issued patent.

9. A record from this system of records may be disclosed, as a routine use, to a Federal, State, or local law enforcement agency, if the USPTO becomes aware of a violation or potential violation of law or regulation.

UNITED STATES PATENT AND TRADEMARK OFFICE

Commissioner for Patents
United States Patent and Trademark Office
P.O. Box 1450
Alexandria, VA 22313-1450
www.uspto.gov

In re Patent No. 5489001
Issue Date: February 6,1996
Application No. 08087269
Filed: July 8,1993
Attorney Docket No. EMYANG414

:

:DECISION GRANTING PETITION
:UNDER 37 CFR 1.378(c)

:

This is a decision on the electronic petition, filed September 30,2009 ,under 37 CFR 1.378(c) to accept the unintentionally delayed payment of the 11.5 year maintenance fee for the above-identified patent.

The petition is **GRANTED**.

The maintenance fee is accepted, and the above-identified patent reinstated as of September 30,2009 . This decision also constitutes notice that the fee has been accepted. An electronic copy of the petition and this decision has been created as an entry in the Image File Wrapper. Nevertheless, petitioner should print and retain an independent copy.

Telephone inquiries related to this electronic decision should be directed to the Electronic Business Center at 1-866-217-9197.

PTO/SB/66 (03-09)
Approved for use through 03/31/2012. OMB 0651-0016
U.S. Patent and Trademark Office: U.S. DEPARTMENT OF COMMERCE
Under the Paperwork Reduction Act of 1995, no persons are required to respond to a collection of information unless it displays valid OMB control number.

PETITION TO ACCEPT UNINTENTIONALLY DELAYED PAYMENT OF MAINTENANCE FEE IN AN EXPIRED PATENT (37 CFR 1.378(c))

Patent Number	Issue Date (YYYY-MM-DD)	Application Number	Filing Date (YYYY-MM-DD)	Docket Number (if applicable)
5684527	1997-11-04	08088336	1993-07-09	354991USMF

CAUTION: Maintenance fee (and surcharge, if any) payment must correctly identify: (1) the patent number and (2) the application number of the actual U.S. application leading to issuance of that patent to ensure the fee(s) is/are associated with the correct patent. 37 CFR 1.366(c) and (d).

SMALL ENTITY
☐ Patentee claims, or has previously claimed, small entity status. See 37 CFR 1.27.

LOSS OF ENTITLEMENT TO SMALL ENTITY STATUS
☐ Patentee is no longer entitled to small entity status. See 37 CFR 1.27(g)

NOT Small Entity		Small Entity	
Fee	Code	Fee	Code
○ 3 ½ year	(1551)	○ 3 ½ year	(2551)
○ 7 ½ year	(1552)	○ 7 ½ year	(2552)
◉ 11 ½ year	(1553)	○ 11 ½ year	(2553)

SURCHARGE
The surcharge required by 37 CFR 1.20(i)(2) (Fee Code 1558) must be paid as a condition of accepting unintentionally delayed payment of the maintenance fee.

MAINTENANCE FEE (37 CFR 1.20(e)-(g))
The appropriate maintenance fee must be submitted with this petition.

STATEMENT
THE UNDERSIGNED CERTIFIES THAT THE DELAY IN PAYMENT OF THE MAINTENANCE FEE TO THIS PATENT WAS UNINTENTIONAL

PETITIONER(S) REQUEST THAT THE DELAYED PAYMENT OF THE MAINTENANCE FEE BE ACCEPTED AND THE PATENT REINSTATED

THIS PORTION MUST BE COMPLETED BY THE SIGNATORY OR SIGNATORIES

37 CFR 1.378(d) states: "Any petition under this section must be signed by an attorney or agent registered to practice before the Patent and Trademark Office, or by the patentee, the assignee, or other party in interest."

I certify, in accordance with 37 CFR 1.4(d)(4) that I am

◉ An attorney or agent registered to practice before the Patent and Trademark Office

○ A sole patentee

○ A joint patentee; I certify that I am authorized to sign this submission on behalf of all the other patentees.

○ A joint patentee; all of whom are signing this e-petition

○ The assignee of record of the entire interest

Patent Practitioner			
A signature of the applicant or representative is required in accordance with 37 CFR 1.33 and 10.18. Please see 37 CFR 1.4(d) for the form of the signature			
Signature	/Marvin J. Spviak/	Date (YYYY-MM-DD)	2010-02-16
Name	Marvin J. Spivak	Registration Number	24913

This collection of information is required by 37 CFR 1.378(c). The information is required to obtain or retain a benefit by the public which is to file (and by the USPTO to process) an application. Confidentiality is governed by 35 U.S.C. 122 and 37 CFR 1.11 and 1.14. This collection is estimated to take 1 hour to complete, including gathering, preparing, and submitting the completed application form to the USPTO. Time will vary depending upon the individual case. Any comments on the amount of time you require to complete this form and/ or suggestions for reducing this burden, should be sent to the Chief Information Officer, U.S. Patent and Trademark Office, U.S. Department of Commerce, P.O. Box 1450, Alexandria, VA 22313-1450. DO NOT SEND FEES OR COMPLETED FORMS TO THIS ADDRESS. **This form can only be used when in conjunction with EFS-Web. If this form is mailed to the USPTO, it may cause delays in reinstating the patent.**

Privacy Act Statement

The Privacy Act of 1974 (P.L. 93-579) requires that you be given certain information in connection with your submission of the attached form related to a patent application or patent. Accordingly, pursuant to the requirements of the Act, please be advised that: (1) the general authority for the collection of this information is 35 U.S.C. 2(b)(2); (2) furnishing of the information solicited is voluntary; and (3) the principal purpose for which the information is used by the U.S. Patent and Trademark Office is to process and/or examine your submission related to a patent application or patent. If you do not furnish the requested information, the U.S. Patent and Trademark Office may not be able to process and/or examine your submission, which may result in termination of proceedings or abandonment of the application or expiration of the patent.

The information provided by you in this form will be subject to the following routine uses:

1. The information on this form will be treated confidentially to the extent allowed under the Freedom of Information Act (5 U.S.C. 552) and the Privacy Act (5 U.S.C. 552a). Records from this system of records may be disclosed to the Department of Justice to determine whether the Freedom of Information Act requires disclosure of these records.

2. A record from this system of records may be disclosed, as a routine use, in the course of presenting evidence to a court, magistrate, or administrative tribunal, including disclosures to opposing counsel in the course of settlement negotiations.

3. A record in this system of records may be disclosed, as a routine use, to a Member of Congress submitting a request involving an individual, to whom the record pertains, when the individual has requested assistance from the Member with respect to the subject matter of the record.

4. A record in this system of records may be disclosed, as a routine use, to a contractor of the Agency having need for the information in order to perform a contract. Recipients of information shall be required to comply with the requirements of the Privacy Act of 1974, as amended, pursuant to 5 U.S.C. 552a(m).

5. A record related to an International Application filed under the Patent Cooperation Treaty in this system of records may be disclosed, as a routine use, to the International Bureau of the World Intellectual Property Organization, pursuant to the Patent Cooperation Treaty.

6. A record in this system of records may be disclosed, as a routine use, to another federal agency for purposes of National Security review (35 U.S.C. 181) and for review pursuant to the Atomic Energy Act (42 U.S.C. 218(c)).

7. A record from this system of records may be disclosed, as a routine use, to the Administrator, General Services, or his/her designee, during an inspection of records conducted by GSA as part of that agency's responsibility to recommend improvements in records management practices and programs, under authority of 44 U.S.C. 2904 and 2906. Such disclosure shall be made in accordance with the GSA regulations governing inspection of records for this purpose, and any other relevant (i.e., GSA or Commerce) directive. Such disclosure shall not be used to make determinations about individuals.

8. A record from this system of records may be disclosed, as a routine use, to the public after either publication of the application pursuant to 35 U.S.C. 122(b) or issuance of a patent pursuant to 35 U.S.C. 151. Further, a record may be disclosed, subject to the limitations of 37 CFR 1.14, as a routine use, to the public if the record was filed in an application which became abandoned or in which the proceedings were terminated and which application is referenced by either a published application, an application open to public inspections or an issued patent.

9. A record from this system of records may be disclosed, as a routine use, to a Federal, State, or local law enforcement agency, if the USPTO becomes aware of a violation or potential violation of law or regulation.

UNITED STATES PATENT AND TRADEMARK OFFICE

Commissioner for Patents
United States Patent and Trademark Office
P.O. Box 1450
Alexandria, VA 22313-1450
www.uspto.gov

In re Patent No. 5684527
Issue Date: November 4,1997
Application No. 08088336
Filed: July 9,1993
Attorney Docket No. 522.1973HJS

:DECISION GRANTING PETITION
:UNDER 37 CFR 1.378(c)

This is a decision on the electronic petition, filed February 16,2010 ,under 37 CFR 1.378(c) to accept the unintentionally delayed payment of the 11.5 year maintenance fee for the above-identified patent.

The petition is **GRANTED**.

The maintenance fee is accepted, and the above-identified patent reinstated as of February 16,2010 . This decision also constitutes notice that the fee has been accepted. An electronic copy of the petition and this decision has been created as an entry in the Image File Wrapper. Nevertheless, petitioner should print and retain an independent copy.

Telephone inquiries related to this electronic decision should be directed to the Electronic Business Center at 1-866-217-9197.

UNITED STATES PATENT AND TRADEMARK OFFICE

COMMISSIONER FOR PATENTS
UNITED STATES PATENT AND TRADEMARK OFFICE
P.O. BOX 1450
ALEXANDRIA, VA 22313-1450
www.uspto.gov

SAND & SEBOLT
AEGIS TOWER, SUITE 1100
4940 MUNSON STREET, NW
CANTON, OH 44718-3615

COPY MAILED
APR 14 2006
OFFICE OF PETITIONS

In re Patent No. 5,357,585	:	
Issue Date: October 18, 1994	:	
Application No. 08/088,685	:	NOTICE
Filed: July 9, 1993	:	
Attorney Docket No. 1386B	:	

This is a notice regarding your request for acceptance of a fee deficiency submission under 37 CFR 1.28, filed March 27, 2006. On September 1, 1998, the Court of Appeals for the Federal Circuit held that 37 CFR 1.28(c) is the sole provision governing the time for correction of the erroneous payment of the issue fee as a small entity. **See DH Technology v. Synergystex International, Inc. 154 F.3d 1333, 47 USPQ2d 1865 (Fed. Cir. Sept. 1, 1998).**

The Office no longer investigates or rejects original or reissue applications under 37 CFR 1.56. **1098 Off. Gaz. Pat. Office 502 (January 3, 1989)**. Therefore, nothing in this Notice is intended to imply that an investigation was done.

Your fee deficiency submission under 37 CFR 1.28 is hereby **ACCEPTED**.

This patent is no longer entitled to small entity status. Accordingly, all future fees paid must be paid at the large entity rate.

Inquiries related to this communication should be directed to the undersigned at (571) 272-3226.

Andrea Smith
Petitions Examiner
Office of Petitions

Under the Paperwork Reduction Act of 1995, no persons are required to respond to a collection of information unless it displays valid OMB control number.

PETITION TO ACCEPT UNINTENTIONALLY DELAYED PAYMENT OF MAINTENANCE FEE IN AN EXPIRED PATENT (37 CFR 1.378(c))

Patent Number	Issue Date (YYYY-MM-DD)	Application Number	Filing Date (YYYY-MM-DD)	Docket Number (if applicable)
5418979	1995-05-30	08088919	1993-07-07	

CAUTION: Maintenance fee (and surcharge, if any) payment must correctly identify: (1) the patent number and (2) the application number of the actual U.S. application leading to issuance of that patent to ensure the fee(s) is/are associated with the correct patent. 37 CFR 1.366(c) and (d).

SMALL ENTITY
☒ Patentee claims, or has previously claimed, small entity status. See 37 CFR 1.27.

LOSS OF ENTITLEMENT TO SMALL ENTITY STATUS
☐ Patentee is no longer entitled to small entity status. See 37 CFR 1.27(g)

NOT Small Entity			Small Entity		
	Fee	Code		Fee	Code
○	3 ½ year	(1551)	○	3 ½ year	(2551)
○	7 ½ year	(1552)	○	7 ½ year	(2552)
○	11 ½ year	(1553)	◉	11 ½ year	(2553)

SURCHARGE
The surcharge required by 37 CFR 1.20(i)(2) (Fee Code 1558) must be paid as a condition of accepting unintentionally delayed payment of the maintenance fee.

MAINTENANCE FEE (37 CFR 1.20(e)-(g))
The appropriate maintenance fee must be submitted with this petition.

STATEMENT
THE UNDERSIGNED CERTIFIES THAT THE DELAY IN PAYMENT OF THE MAINTENANCE FEE TO THIS PATENT WAS UNINTENTIONAL

PETITIONER(S) REQUEST THAT THE DELAYED PAYMENT OF THE MAINTENANCE FEE BE ACCEPTED AND THE PATENT REINSTATED

THIS PORTION MUST BE COMPLETED BY THE SIGNATORY OR SIGNATORIES

37 CFR 1.378(d) states: "Any petition under this section must be signed by an attorney or agent registered to practice before the Patent and Trademark Office, or by the patentee, the assignee, or other party in interest."

I certify, in accordance with 37 CFR 1.4(d)(4) that I am

○ An attorney or agent registered to practice before the Patent and Trademark Office

◉ A sole patentee

○ A joint patentee; I certify that I am authorized to sign this submission on behalf of all the other patentees.

○ A joint patentee; all of whom are signing this e-petition

○ The assignee of record of the entire interest

Sole Patentee			
A signature of the applicant or representative is required in accordance with 37 CFR 1.33 and 10.18. Please see 37 CFR 1.4(d) for the form of the signature.			
Signature	/Khoi N. Senderowicz/	Date (YYYY-MM-DD)	2007-07-07
Name	Khoi N. Senderowicz		

This collection of information is required by 37 CFR 1.378(c). The information is required to obtain or retain a benefit by the public which is to file (and by the USPTO to process) an application. Confidentiality is governed by 35 U.S.C. 122 and 37 CFR 1.11 and 1.14. This collection is estimated to take 1 hour to complete, including gathering, preparing, and submitting the completed application form to the USPTO. Time will vary depending upon the individual case. Any comments on the amount of time you require to complete this form and/or suggestions for reducing this burden, should be sent to the Chief Information Officer, U.S. Patent and Trademark Office, U.S. Department of Commerce, P.O. Box 1450, Alexandria, VA 22313-1450. DO NOT SEND FEES OR COMPLETED FORMS TO THIS ADDRESS. **This form can only be used when in conjunction with EFS-Web. If this form is mailed to the USPTO, it may cause delays in reinstating the patent.**

Privacy Act Statement

The Privacy Act of 1974 (P.L. 93-579) requires that you be given certain information in connection with your submission of the attached form related to a patent application or patent. Accordingly, pursuant to the requirements of the Act, please be advised that: (1) the general authority for the collection of this information is 35 U.S.C. 2(b)(2); (2) furnishing of the information solicited is voluntary; and (3) the principal purpose for which the information is used by the U.S. Patent and Trademark Office is to process and/or examine your submission related to a patent application or patent. If you do not furnish the requested information, the U.S. Patent and Trademark Office may not be able to process and/or examine your submission, which may result in termination of proceedings or abandonment of the application or expiration of the patent.

The information provided by you in this form will be subject to the following routine uses:

1. The information on this form will be treated confidentially to the extent allowed under the Freedom of Information Act (5 U.S.C. 552) and the Privacy Act (5 U.S.C. 552a). Records from this system of records may be disclosed to the Department of Justice to determine whether the Freedom of Information Act requires disclosure of these record s.

2. A record from this system of records may be disclosed, as a routine use, in the course of presenting evidence to a court, magistrate, or administrative tribunal, including disclosures to opposing counsel in the course of settlement negotiations.

3. A record in this system of records may be disclosed, as a routine use, to a Member of Congress submitting a request involving an individual, to whom the record pertains, when the individual has requested assistance from the Member with respect to the subject matter of the record.

4. A record in this system of records may be disclosed, as a routine use, to a contractor of the Agency having need for the information in order to perform a contract. Recipients of information shall be required to comply with the requirements of the Privacy Act of 1974, as amended, pursuant to 5 U.S.C. 552a(m).

5. A record related to an International Application filed under the Patent Cooperation Treaty in this system of records may be disclosed, as a routine use, to the International Bureau of the World Intellectual Property Organization, pursuant to the Patent Cooperation Treaty.

6. A record in this system of records may be disclosed, as a routine use, to another federal agency for purposes of National Security review (35 U.S.C. 181) and for review pursuant to the Atomic Energy Act (42 U.S.C. 218(c)).

7. A record from this system of records may be disclosed, as a routine use, to the Administrator, General Services, or his/her designee, during an inspection of records conducted by GSA as part of that agency's responsibility to recommend improvements in records management practices and programs, under authority of 44 U.S.C. 2904 and 2906. Such disclosure shall be made in accordance with the GSA regulations governing inspection of records for this purpose, and any other relevant (i.e., GSA or Commerce) directive. Such disclosure shall not be used to make determinations about individuals.

8. A record from this system of records may be disclosed, as a routine use, to the public after either publication of the application pursuant to 35 U.S.C. 122(b) or issuance of a patent pursuant to 35 U.S.C. 151. Further, a record may be disclosed, subject to the limitations of 37 CFR 1.14, as a routine use, to the public if the record was filed in an application which became abandoned or in which the proceedings were terminated and which application is referenced by either a published application, an application open to public inspections or an issued patent.

9. A record from this system of records may be disclosed, as a routine use, to a Federal, State, or local law enforcement agency, if the USPTO becomes aware of a violation or potential violation of law or regulation.

UNITED STATES PATENT AND TRADEMARK OFFICE

Commissioner for Patents
United States Patent and Trademark Office
P.O. Box 1450
Alexandria, VA 22313-1450
www.uspto.gov

In re Patent No. 5418979
Issue Date: May 30,1995
Application No. 08088919
Filed: July 7,1993
Attorney Docket No.

:

:DECISION GRANTING PETITION
:UNDER 37 CFR 1.378(c)

:

This is a decision on the electronic petition, filed July 26,2007 ,under 37 CFR 1.378(c) to accept the unintentionally delayed payment of the 11.5 year maintenance fee for the above-identified patent.

The petition is GRANTED.

The maintenance fee is accepted, and the above-identified patent reinstated as of July 26,2007 . This decision also constitutes notice that the fee has been accepted. An electronic copy of the petition and this decision has been created as an entry in an Image File Wrapper. Nevertheless, petitioner should print and retain an independent copy

Telephone inquires related to this electronic decision should be directed to the Electronic Business Center at 1-866-217-9197.

Under the Paperwork Reduction Act of 1995, no persons are required to respond to a collection of information unless it displays valid OMB control number.

PETITION TO ACCEPT UNINTENTIONALLY DELAYED PAYMENT OF MAINTENANCE FEE IN AN EXPIRED PATENT (37 CFR 1.378(c))

Patent Number	Issue Date (YYYY-MM-DD)	Application Number	Filing Date (YYYY-MM-DD)	Docket Number (if applicable)
5505229	1996-04-09	08090500	1993-07-12	7041.P14

CAUTION: Maintenance fee (and surcharge, if any) payment must correctly identify: (1) the patent number and (2) the application number of the actual U.S. application leading to issuance of that patent to ensure the fee(s) is/are associated with the correct patent. 37 CFR 1.366(c) and (d).

SMALL ENTITY
☐ Patentee claims, or has previously claimed, small entity status. See 37 CFR 1.27.

LOSS OF ENTITLEMENT TO SMALL ENTITY STATUS
☐ Patentee is no longer entitled to small entity status. See 37 CFR 1.27(g)

NOT Small Entity		Small Entity	
Fee	Code	Fee	Code
○ 3 ½ year	(1551)	○ 3 ½ year	(2551)
○ 7 ½ year	(1552)	○ 7 ½ year	(2552)
◉ 11 ½ year	(1553)	○ 11 ½ year	(2553)

SURCHARGE
The surcharge required by 37 CFR 1.20(i)(2) (Fee Code 1558) must be paid as a condition of accepting unintentionally delayed payment of the maintenance fee.

MAINTENANCE FEE (37 CFR 1.20(e)-(g))
The appropriate maintenance fee must be submitted with this petition.

STATEMENT
THE UNDERSIGNED CERTIFIES THAT THE DELAY IN PAYMENT OF THE MAINTENANCE FEE TO THIS PATENT WAS UNINTENTIONAL

PETITIONER(S) REQUEST THAT THE DELAYED PAYMENT OF THE MAINTENANCE FEE BE ACCEPTED AND THE PATENT REINSTATED

THIS PORTION MUST BE COMPLETED BY THE SIGNATORY OR SIGNATORIES

37 CFR 1.378(d) states: "Any petition under this section must be signed by an attorney or agent registered to practice before the Patent and Trademark Office, or by the patentee, the assignee, or other party in interest."

I certify, in accordance with 37 CFR 1.4(d)(4) that I am

◉ An attorney or agent registered to practice before the Patent and Trademark Office

○ A sole patentee

○ A joint patentee; I certify that I am authorized to sign this submission on behalf of all the other patentees.

○ A joint patentee; all of whom are signing this e-petition

○ The assignee of record of the entire interest

Patent Practitioner			
A signature of the applicant or representative is required in accordance with 37 CFR 1.33 and 10.18. Please see 37 CFR 1.4(d) for the form of the signature			
Signature	/philipjlee/	Date (YYYY-MM-DD)	2008-04-29
Name	Philip J. Lee	Registration Number	32869

This collection of information is required by 37 CFR 1.378(c). The information is required to obtain or retain a benefit by the public which is to file (and by the USPTO to process) an application. Confidentiality is governed by 35 U.S.C. 122 and 37 CFR 1.11 and 1.14. This collection is estimated to take 1 hour to complete, including gathering, preparing, and submitting the completed application form to the USPTO. Time will vary depending upon the individual case. Any comments on the amount of time you require to complete this form and/ or suggestions for reducing this burden, should be sent to the Chief Information Officer, U.S. Patent and Trademark Office, U.S. Department of Commerce, P.O. Box 1450, Alexandria, VA 22313-1450. DO NOT SEND FEES OR COMPLETED FORMS TO THIS ADDRESS. **This form can only be used when in conjunction with EFS-Web. If this form is mailed to the USPTO, it may cause delays in reinstating the patent.**

Privacy Act Statement

The Privacy Act of 1974 (P.L. 93-579) requires that you be given certain information in connection with your submission of the attached form related to a patent application or patent. Accordingly, pursuant to the requirements of the Act, please be advised that: (1) the general authority for the collection of this information is 35 U.S.C. 2(b)(2); (2) furnishing of the information solicited is voluntary; and (3) the principal purpose for which the information is used by the U.S. Patent and Trademark Office is to process and/or examine your submission related to a patent application or patent. If you do not furnish the requested information, the U.S. Patent and Trademark Office may not be able to process and/or examine your submission, which may result in termination of proceedings or abandonment of the application or expiration of the patent.

The information provided by you in this form will be subject to the following routine uses:

1. The information on this form will be treated confidentially to the extent allowed under the Freedom of Information Act (5 U.S.C. 552) and the Privacy Act (5 U.S.C. 552a). Records from this system of records may be disclosed to the Department of Justice to determine whether the Freedom of Information Act requires disclosure of these record s.

2. A record from this system of records may be disclosed, as a routine use, in the course of presenting evidence to a court, magistrate, or administrative tribunal, including disclosures to opposing counsel in the course of settlement negotiations.

3. A record in this system of records may be disclosed, as a routine use, to a Member of Congress submitting a request involving an individual, to whom the record pertains, when the individual has requested assistance from the Member with respect to the subject matter of the record.

4. A record in this system of records may be disclosed, as a routine use, to a contractor of the Agency having need for the information in order to perform a contract. Recipients of information shall be required to comply with the requirements of the Privacy Act of 1974, as amended, pursuant to 5 U.S.C. 552a(m).

5. A record related to an International Application filed under the Patent Cooperation Treaty in this system of records may be disclosed, as a routine use, to the International Bureau of the World Intellectual Property Organization, pursuant to the Patent Cooperation Treaty.

6. A record in this system of records may be disclosed, as a routine use, to another federal agency for purposes of National Security review (35 U.S.C. 181) and for review pursuant to the Atomic Energy Act (42 U.S.C. 218(c)).

7. A record from this system of records may be disclosed, as a routine use, to the Administrator, General Services, or his/her designee, during an inspection of records conducted by GSA as part of that agency's responsibility to recommend improvements in records management practices and programs, under authority of 44 U.S.C. 2904 and 2906. Such disclosure shall be made in accordance with the GSA regulations governing inspection of records for this purpose, and any other relevant (i.e., GSA or Commerce) directive. Such disclosure shall not be used to make determinations about individuals.

8. A record from this system of records may be disclosed, as a routine use, to the public after either publication of the application pursuant to 35 U.S.C. 122(b) or issuance of a patent pursuant to 35 U.S.C. 151. Further, a record may be disclosed, subject to the limitations of 37 CFR 1.14, as a routine use, to the public if the record was filed in an application which became abandoned or in which the proceedings were terminated and which application is referenced by either a published application, an application open to public inspections or an issued patent.

9. A record from this system of records may be disclosed, as a routine use, to a Federal, State, or local law enforcement agency, if the USPTO becomes aware of a violation or potential violation of law or regulation.

UNITED STATES PATENT AND TRADEMARK OFFICE

Commissioner for Patents
United States Patent and Trademark Office
P.O. Box 1450
Alexandria, VA 22313-1450
www.uspto.gov

In re Patent No. 5505229
Issue Date: April 9,1996
Application No. 08090500
Filed: July 12,1993
Attorney Docket No. 7041.P14

:
:DECISION GRANTING PETITION
:UNDER 37 CFR 1.378(c)
:

This is a decision on the electronic petition, filed April 29,2008 ,under 37 CFR 1.378(c) to accept the unintentionally delayed payment of the 11.5 year maintenance fee for the above-identified patent.

The petition is GRANTED.

The maintenance fee is accepted, and the above-identified patent reinstated as of April 29,2008 . This decision also constitutes notice that the fee has been accepted. An electronic copy of the petition and this decision has been created as an entry in an Image File Wrapper. Nevertheless, petitioner should print and retain an independent copy

Telephone inquires related to this electronic decision should be directed to the Electronic Business Center at 1-866-217-9197.

UNITED STATES PATENT AND TRADEMARK OFFICE

Commissioner for Patents
United States Patent and Trademark Office
P.O. Box 1450
Alexandria, VA 22313-1450
www.uspto.gov

DAVID WALDMAN
APRILIS, INC.
5 CLOCK TOWER PLACE, SUITE 200
MAYNARD, MA 01754

COPY MAILED

APR 2 0 2006

OFFICE OF PETITIONS

In re Application of	:	
Redfield et al.	:	
Patent No. 5,477,347	:	ON PETITION
Application No. 08/091,620	:	
Filed: July 14, 1993	:	
Issued: December 19, 1995		
Attorney Docket No. TAMA21817		

This is a decision on the renewed petition under 37 CFR 1.378(c), filed November 19, 2004, and supplemented on July 5, 2005,[1] to accept the unintentionally delayed payment of a maintenance fee for the above-identified patent.

The petition is **GRANTED**.

The maintenance fee is hereby accepted and the above-identified patent is reinstated as of the mail date of this decision.

Telephone inquiries concerning this decision should be directed to the undersigned at (571) 272-3282.

The patent file is being forwarded to Files Repository.

Liana Chase
Petitions Examiner
Office of Petitions

[1] A response to the Petition Decision was submitted on November 19, 2004, according to USTPO Palm records. However, the application has been deemed lost. The documents submitted in response to the Petition Decision in Patent No. 5,896,210 are being used to render this decision.

UNITED STATES
PATENT AND
TRADEMARK OFFICE

UNDER SECRETARY OF COMMERCE FOR INTELLECTUAL PROPERTY
AND DIRECTOR OF THE UNITED STATES PATENT AND TRADEMARK OFFICE
WASHINGTON, D.C. 20231
WWW.USPTO.GOV

BROWN & MICHAELS, PC
400 M & T BANK BUILDING
118 NORTH TIOGA ST
ITHACA NY 14850

#32

In re Application of
Robert R. Granados et al
Serial No.: 08/091,655
Filed: July 14, 1993
Attorney Docket No.: BTI-24

: PETITION DECISION

This is in response to applicant's petition under 37 CFR 1.181, filed September 26, 2002, to withdraw the abandonment of the above identified application based on timely filing of a reply.

A review of the file history shows that the examiner mailed an Office action to applicants on December 21, 2001, setting a three month shortened statutory period for reply. When no reply was correlated with the file a Notice of Abandonment was mailed to applicants on March 20, 2002. Applicants state that a reply was filed on January 18, 2002, including a properly executed Certificate of Mailing. The originally submitted papers have not been matched with the file, however the copy of the amendment submitted with the petition will be used. It is concluded in view of the evidence that the reply was timely filed. Hence the Notice of Abandonment was mailed in error and is hereby withdrawn and the application restored to pending status with the mailing of this decision.

Applicants' petition is **GRANTED**.

The application will be forwarded to the examiner for further consideration.

Should there be any questions with respect to this decision, please contact William R. Dixon, Jr., by mail addressed to: Director, Technology Center 1600, Washington, D.C. 20231, or by telephone at (703)308-3824 or by facsimile transmission at (703) 308-7230.

John Doll
Director, Technology Center 1600

Under the Paperwork Reduction Act of 1995, no persons are required to respond to a collection of information unless it displays valid OMB control number.

PETITION TO ACCEPT UNINTENTIONALLY DELAYED PAYMENT OF MAINTENANCE FEE IN AN EXPIRED PATENT (37 CFR 1.378(c))

Patent Number	Issue Date (YYYY-MM-DD)	Application Number	Filing Date (YYYY-MM-DD)	Docket Number (if applicable)
5419532	1995-05-30	08093804	1993-07-19	327.001

CAUTION: Maintenance fee (and surcharge, if any) payment must correctly identify: (1) the patent number and (2) the application number of the actual U.S. application leading to issuance of that patent to ensure the fee(s) is/are associated with the correct patent. 37 CFR 1.366(c) and (d).

SMALL ENTITY
☒ Patentee claims, or has previously claimed, small entity status. See 37 CFR 1.27.

LOSS OF ENTITLEMENT TO SMALL ENTITY STATUS
☐ Patentee is no longer entitled to small entity status. See 37 CFR 1.27(g)

NOT Small Entity			Small Entity		
	Fee	Code		Fee	Code
○	3 ½ year	(1551)	○	3 ½ year	(2551)
○	7 ½ year	(1552)	○	7 ½ year	(2552)
○	11 ½ year	(1553)	◉	11 ½ year	(2553)

SURCHARGE
The surcharge required by 37 CFR 1.20(i)(2) (Fee Code 1558) must be paid as a condition of accepting unintentionally delayed payment of the maintenance fee.

MAINTENANCE FEE (37 CFR 1.20(e)-(g))
The appropriate maintenance fee must be submitted with this petition.

STATEMENT
THE UNDERSIGNED CERTIFIES THAT THE DELAY IN PAYMENT OF THE MAINTENANCE FEE TO THIS PATENT WAS UNINTENTIONAL

PETITIONER(S) REQUEST THAT THE DELAYED PAYMENT OF THE MAINTENANCE FEE BE ACCEPTED AND THE PATENT REINSTATED

THIS PORTION MUST BE COMPLETED BY THE SIGNATORY OR SIGNATORIES

37 CFR 1.378(d) states: "Any petition under this section must be signed by an attorney or agent registered to practice before the Patent and Trademark Office, or by the patentee, the assignee, or other party in interest."

I certify, in accordance with 37 CFR 1.4(d)(4) that I am

◉ An attorney or agent registered to practice before the Patent and Trademark Office

○ A sole patentee

○ A joint patentee; I certify that I am authorized to sign this submission on behalf of all the other patentees.

○ A joint patentee; all of whom are signing this e-petition

○ The assignee of record of the entire interest

Patent Practitioner			
A signature of the applicant or representative is required in accordance with 37 CFR 1.33 and 10.18. Please see 37 CFR 1.4(d) for the form of the signature			
Signature	/WBUSKOP/	Date (YYYY-MM-DD)	2008-01-25
Name	Wendy Buskop	Registration Number	32202

This collection of information is required by 37 CFR 1.378(c). The information is required to obtain or retain a benefit by the public which is to file (and by the USPTO to process) an application. Confidentiality is governed by 35 U.S.C. 122 and 37 CFR 1.11 and 1.14. This collection is estimated to take 1 hour to complete, including gathering, preparing, and submitting the completed application form to the USPTO. Time will vary depending upon the individual case. Any comments on the amount of time you require to complete this form and/ or suggestions for reducing this burden, should be sent to the Chief Information Officer, U.S. Patent and Trademark Office, U.S. Department of Commerce, P.O. Box 1450, Alexandria, VA 22313-1450. DO NOT SEND FEES OR COMPLETED FORMS TO THIS ADDRESS. **This form can only be used when in conjunction with EFS-Web. If this form is mailed to the USPTO, it may cause delays in reinstating the patent.**

Privacy Act Statement

The Privacy Act of 1974 (P.L. 93-579) requires that you be given certain information in connection with your submission of the attached form related to a patent application or patent. Accordingly, pursuant to the requirements of the Act, please be advised that: (1) the general authority for the collection of this information is 35 U.S.C. 2(b)(2); (2) furnishing of the information solicited is voluntary; and (3) the principal purpose for which the information is used by the U.S. Patent and Trademark Office is to process and/or examine your submission related to a patent application or patent. If you do not furnish the requested information, the U.S. Patent and Trademark Office may not be able to process and/or examine your submission, which may result in termination of proceedings or abandonment of the application or expiration of the patent.

The information provided by you in this form will be subject to the following routine uses:

1. The information on this form will be treated confidentially to the extent allowed under the Freedom of Information Act (5 U.S.C. 552) and the Privacy Act (5 U.S.C. 552a). Records from this system of records may be disclosed to the Department of Justice to determine whether the Freedom of Information Act requires disclosure of these record s.

2. A record from this system of records may be disclosed, as a routine use, in the course of presenting evidence to a court, magistrate, or administrative tribunal, including disclosures to opposing counsel in the course of settlement negotiations.

3. A record in this system of records may be disclosed, as a routine use, to a Member of Congress submitting a request involving an individual, to whom the record pertains, when the individual has requested assistance from the Member with respect to the subject matter of the record.

4. A record in this system of records may be disclosed, as a routine use, to a contractor of the Agency having need for the information in order to perform a contract. Recipients of information shall be required to comply with the requirements of the Privacy Act of 1974, as amended, pursuant to 5 U.S.C. 552a(m).

5. A record related to an International Application filed under the Patent Cooperation Treaty in this system of records may be disclosed, as a routine use, to the International Bureau of the World Intellectual Property Organization, pursuant to the Patent Cooperation Treaty.

6. A record in this system of records may be disclosed, as a routine use, to another federal agency for purposes of National Security review (35 U.S.C. 181) and for review pursuant to the Atomic Energy Act (42 U.S.C. 218(c)).

7. A record from this system of records may be disclosed, as a routine use, to the Administrator, General Services, or his/her designee, during an inspection of records conducted by GSA as part of that agency's responsibility to recommend improvements in records management practices and programs, under authority of 44 U.S.C. 2904 and 2906. Such disclosure shall be made in accordance with the GSA regulations governing inspection of records for this purpose, and any other relevant (i.e., GSA or Commerce) directive. Such disclosure shall not be used to make determinations about individuals.

8. A record from this system of records may be disclosed, as a routine use, to the public after either publication of the application pursuant to 35 U.S.C. 122(b) or issuance of a patent pursuant to 35 U.S.C. 151. Further, a record may be disclosed, subject to the limitations of 37 CFR 1.14, as a routine use, to the public if the record was filed in an application which became abandoned or in which the proceedings were terminated and which application is referenced by either a published application, an application open to public inspections or an issued patent.

9. A record from this system of records may be disclosed, as a routine use, to a Federal, State, or local law enforcement agency, if the USPTO becomes aware of a violation or potential violation of law or regulation.

UNITED STATES PATENT AND TRADEMARK OFFICE

Commissioner for Patents
United States Patent and Trademark Office
P.O. Box 1450
Alexandria, VA 22313-1450
www.uspto.gov

In re Patent No. 5419532
Issue Date: May 30,1995
Application No. 08093804
Filed: July 19,1993
Attorney Docket No. ZIDPATUS001

:
:DECISION GRANTING PETITION
:UNDER 37 CFR 1.378(c)
:

This is a decision on the electronic petition, filed January 25,2008 ,under 37 CFR 1.378(c) to accept the unintentionally delayed payment of the 11.5 year maintenance fee for the above-identified patent.

The petition is GRANTED.

The maintenance fee is accepted, and the above-identified patent reinstated as of January 25,2008 . This decision also constitutes notice that the fee has been accepted. An electronic copy of the petition and this decision has been created as an entry in an Image File Wrapper. Nevertheless, petitioner should print and retain an independent copy

Telephone inquires related to this electronic decision should be directed to the Electronic Business Center at 1-866-217-9197.

Under the Paperwork Reduction Act of 1995, no persons are required to respond to a collection of information unless it displays valid OMB control number.

PETITION TO ACCEPT UNINTENTIONALLY DELAYED PAYMENT OF MAINTENANCE FEE IN AN EXPIRED PATENT (37 CFR 1.378(c))

Patent Number	Issue Date (YYYY-MM-DD)	Application Number	Filing Date (YYYY-MM-DD)	Docket Number (if applicable)
5496179	1996-03-05	08094230	1993-07-21	

CAUTION: Maintenance fee (and surcharge, if any) payment must correctly identify: (1) the patent number and (2) the application number of the actual U.S. application leading to issuance of that patent to ensure the fee(s) is/are associated with the correct patent. 37 CFR 1.366(c) and (d).

SMALL ENTITY
☒ Patentee claims, or has previously claimed, small entity status. See 37 CFR 1.27.

LOSS OF ENTITLEMENT TO SMALL ENTITY STATUS
☐ Patentee is no longer entitled to small entity status. See 37 CFR 1.27(g)

NOT Small Entity		Small Entity	
Fee	Code	Fee	Code
○ 3 ½ year	(1551)	○ 3 ½ year	(2551)
○ 7 ½ year	(1552)	○ 7 ½ year	(2552)
○ 11 ½ year	(1553)	◉ 11 ½ year	(2553)

SURCHARGE
The surcharge required by 37 CFR 1.20(i)(2) (Fee Code 1558) must be paid as a condition of accepting unintentionally delayed payment of the maintenance fee.

MAINTENANCE FEE (37 CFR 1.20(e)-(g))
The appropriate maintenance fee must be submitted with this petition.

STATEMENT
THE UNDERSIGNED CERTIFIES THAT THE DELAY IN PAYMENT OF THE MAINTENANCE FEE TO THIS PATENT WAS UNINTENTIONAL

PETITIONER(S) REQUEST THAT THE DELAYED PAYMENT OF THE MAINTENANCE FEE BE ACCEPTED AND THE PATENT REINSTATED

THIS PORTION MUST BE COMPLETED BY THE SIGNATORY OR SIGNATORIES

37 CFR 1.378(d) states: "Any petition under this section must be signed by an attorney or agent registered to practice before the Patent and Trademark Office, or by the patentee, the assignee, or other party in interest."

I certify, in accordance with 37 CFR 1.4(d)(4) that I am

○ An attorney or agent registered to practice before the Patent and Trademark Office

◉ A sole patentee

○ A joint patentee; I certify that I am authorized to sign this submission on behalf of all the other patentees.

○ A joint patentee; all of whom are signing this e-petition

○ The assignee of record of the entire interest

Sole Patentee			
A signature of the applicant or representative is required in accordance with 37 CFR 1.33 and 10.18. Please see 37 CFR 1.4(d) for the form of the signature.			
Signature	/christine hoffman/	Date (YYYY-MM-DD)	1944-06-02
Name	/christine hoffman/		

This collection of information is required by 37 CFR 1.378(c). The information is required to obtain or retain a benefit by the public which is to file (and by the USPTO to process) an application. Confidentiality is governed by 35 U.S.C. 122 and 37 CFR 1.11 and 1.14. This collection is estimated to take 1 hour to complete, including gathering, preparing, and submitting the completed application form to the USPTO. Time will vary depending upon the individual case. Any comments on the amount of time you require to complete this form and/or suggestions for reducing this burden, should be sent to the Chief Information Officer, U.S. Patent and Trademark Office, U.S. Department of Commerce, P.O. Box 1450, Alexandria, VA 22313-1450. DO NOT SEND FEES OR COMPLETED FORMS TO THIS ADDRESS. **This form can only be used when in conjunction with EFS-Web. If this form is mailed to the USPTO, it may cause delays in reinstating the patent.**

Privacy Act Statement

The Privacy Act of 1974 (P.L. 93-579) requires that you be given certain information in connection with your submission of the attached form related to a patent application or patent. Accordingly, pursuant to the requirements of the Act, please be advised that: (1) the general authority for the collection of this information is 35 U.S.C. 2(b)(2); (2) furnishing of the information solicited is voluntary; and (3) the principal purpose for which the information is used by the U.S. Patent and Trademark Office is to process and/or examine your submission related to a patent application or patent. If you do not furnish the requested information, the U.S. Patent and Trademark Office may not be able to process and/or examine your submission, which may result in termination of proceedings or abandonment of the application or expiration of the patent.

The information provided by you in this form will be subject to the following routine uses:

1. The information on this form will be treated confidentially to the extent allowed under the Freedom of Information Act (5 U.S.C. 552) and the Privacy Act (5 U.S.C. 552a). Records from this system of records may be disclosed to the Department of Justice to determine whether the Freedom of Information Act requires disclosure of these record s.

2. A record from this system of records may be disclosed, as a routine use, in the course of presenting evidence to a court, magistrate, or administrative tribunal, including disclosures to opposing counsel in the course of settlement negotiations.

3. A record in this system of records may be disclosed, as a routine use, to a Member of Congress submitting a request involving an individual, to whom the record pertains, when the individual has requested assistance from the Member with respect to the subject matter of the record.

4. A record in this system of records may be disclosed, as a routine use, to a contractor of the Agency having need for the information in order to perform a contract. Recipients of information shall be required to comply with the requirements of the Privacy Act of 1974, as amended, pursuant to 5 U.S.C. 552a(m).

5. A record related to an International Application filed under the Patent Cooperation Treaty in this system of records may be disclosed, as a routine use, to the International Bureau of the World Intellectual Property Organization, pursuant to the Patent Cooperation Treaty.

6. A record in this system of records may be disclosed, as a routine use, to another federal agency for purposes of National Security review (35 U.S.C. 181) and for review pursuant to the Atomic Energy Act (42 U.S.C. 218(c)).

7. A record from this system of records may be disclosed, as a routine use, to the Administrator, General Services, or his/her designee, during an inspection of records conducted by GSA as part of that agency's responsibility to recommend improvements in records management practices and programs, under authority of 44 U.S.C. 2904 and 2906. Such disclosure shall be made in accordance with the GSA regulations governing inspection of records for this purpose, and any other relevant (i.e., GSA or Commerce) directive. Such disclosure shall not be used to make determinations about individuals.

8. A record from this system of records may be disclosed, as a routine use, to the public after either publication of the application pursuant to 35 U.S.C. 122(b) or issuance of a patent pursuant to 35 U.S.C. 151. Further, a record may be disclosed, subject to the limitations of 37 CFR 1.14, as a routine use, to the public if the record was filed in an application which became abandoned or in which the proceedings were terminated and which application is referenced by either a published application, an application open to public inspections or an issued patent.

9. A record from this system of records may be disclosed, as a routine use, to a Federal, State, or local law enforcement agency, if the USPTO becomes aware of a violation or potential violation of law or regulation.

UNITED STATES PATENT AND TRADEMARK OFFICE

Commissioner for Patents
United States Patent and Trademark Office
P.O. Box 1450
Alexandria, VA 22313-1450
www.uspto.gov

In re Patent No. 5496179
Issue Date: March 5,1996
Application No. 08094230
Filed: July 21,1993
Attorney Docket No. 1

:

:DECISION GRANTING PETITION
:UNDER 37 CFR 1.378(c)

:

This is a decision on the electronic petition, filed March 4,2009 ,under 37 CFR 1.378(c) to accept the unintentionally delayed payment of the 11.5 year maintenance fee for the above-identified patent.

The petition is **GRANTED**.

The maintenance fee is accepted, and the above-identified patent reinstated as of March 4,2009 .
This decision also constitutes notice that the fee has been accepted. An electronic copy of the petition and this decision has been created as an entry in the Image File Wrapper. Nevertheless, petitioner should print and retain an independent copy.

Telephone inquiries related to this electronic decision should be directed to the Electronic Business Center at 1-866-217-9197.

UNITED STATES PATENT AND TRADEMARK OFFICE

COMMISSIONER FOR PATENTS
UNITED STATES PATENT AND TRADEMARK OFFICE
P.O. BOX 1450
ALEXANDRIA, VA 22313-1450
www.uspto.gov

Paper No. 14

BENESCH, FRIEDLANDER, COPLAN & ARONOFF LLP
ATTN: IP DEPARTMENT DOCKET CLERK
2300 BP TOWER
200 PUBLIC SQUARE
CLEVELAND OH 44114

COPY MAILED

MAY 0 2 2008

OFFICE OF PETITIONS

In re Patent No. 5,472,438	:	
Issue Date: December 5, 1995	:	
Application No. 08/096,031	:	ON PETITION
Filed: July 22, 1993	:	
Patentee: Brian D. Schmit, et al.	:	

This is a decision on the petition under 37 CFR 1.378(c), filed January 3, 2008, to accept the delayed payment of a maintenance fee for the above-identified patent.

The petition is **DISMISSED**.

This patent issued on December 5, 1995. Accordingly, this patent expired on December 5, 2007 for failure to pay the third maintenance fee. Since the petition was submitted within twenty-four months after the six –month grace period provided in 37 CFR 1.362(e), the petition was timely filed under the provisions of 37 CFR 1.378(c).

A petition to accept the unintentionally delayed payment of a maintenance fee under 35 U.S.C. 41(c) and 37 CFR 1.378(c) must be accompanied by: (1) a statement that the delay was unintentional; (2) payment of the appropriate maintenance fee, unless previously submitted; (3) payment of the surcharge set forth in 37 CFR 1.20(i)(2).

The petition lacks item (1) above. In this regard, the petition is not signed, as required by 37 CFR 1.378(d), by an attorney or agent registered to practice before the Patent and Trademark Office, the patentee, or the assignee or other party in interest as established by 37 CFR 3.73(b).[1] Consequently, the petition is considered not to contain a proper statement of unintentional delay and cannot be accepted.

[1]37 CFR 3.73(b) provides that: (1) when an assignee seeks to take action in a matter before the Office, the assignee must establish its ownership of the property to the satisfaction of the Commissioner; (2) ownership is established by submitting to the Office, in the Office file related to the matter in which action is sought to be taken, documentary evidence of a chain of title from the original owner to the assignee (e.g., copy of an executed assignment submitted for recording) or by specifying (e.g., reel and frame number) where such evidence is recorded in the Office; (3) the submission establishing ownership must be signed by a party authorized to act on behalf of the assignee; and (4) documents submitted to establish ownership may be required to be recorded as a condition to permitting the assignee to take action in a matter pending before the Office.

If reconsideration of this decision is desired, a properly signed petition for reconsideration under 37 CFR 1.378(e) must be filed within TWO (2) MONTHS from the mail date of this decision. No extension of this 2-month time limit can be granted under 37 CFR 1.136(a) or (b). **Any such petition for reconsideration must be accompanied by the petition fee of $400 as set forth in 37 CFR 1.17(f).** The petition for reconsideration must also include any lacking item(s) noted above, since, after a decision on the petition for reconsideration, no further reconsideration or review of the matter will be undertaken by the Director. For applicant's convenience a Statement under 37 CFR 3.73(b) is attached.

The file does not indicate a change of address has been submitted, although the address given on the petition differs from the address of record. If appropriate, a change of address should be filed in accordance with MPEP 601.03. A courtesy copy of this decision is being mailed to the address given on the petition; however, the Office will mail all future correspondence solely to the address of record.

Further correspondence with respect to this matter should be addressed as follows:

By mail: Mail Stop PETITION
Commissioner for Patents
Post Office Box 1450
Alexandria, VA 22313-1450

By hand: U.S. Patent and Trademark Office
Customer Service Window, Mail Stop PETITION
Randolph Building
401 Dulany Street
Alexandria, VA 22314

The centralized facsimile number is **(571) 273-8300.**

If petitioner does not wish to pursue reinstatement of this expired patent, petitioner may request a refund of the $1,955 maintenance fee and the $1,640 surcharge fee submitted with the petition. The request should be made in writing and addressed to: Mail Stop 16, Director of the U.S. Patent and Trademark Office, P. O. Box 1450, Alexandria, VA 22313-1450. A copy of this decision should accompany petitioner's request.

Any questions concerning this matter may be directed to the undersigned at (571) 272-3204.

Sherry D. Brinkley
Petitions Examiner
Office of Petitions

Attachment: Statement Under 37 CFR 3.73(b)

cc: JOSEPH JANKOWSKI, PH. D., ASSOC. VP OF TECHNOLOGY TRANSFER
CASE WESTERN RESERVE UNIVERSITY
SEARS LIBRARY, 6TH FLOOR
CLEVELAND, OH 44106

PTO/SB/96 (01-08)
Approved for use through 04/30/2008. OMB 0651-0031
U.S. Patent and Trademark Office; U.S. DEPARTMENT OF COMMERCE
Under the Paperwork Reduction Act of 1995, no persons are required to respond to a collection of information unless it displays a valid OMB control number.

STATEMENT UNDER 37 CFR 3.73(b)

Applicant/Patent Owner: _____

Application No./Patent No.: _____ Filed/Issue Date: _____

Entitled:

_____, a _____
(Name of Assignee) (Type of Assignee, e.g., corporation, partnership, university, government agency, etc.)

states that it is:
1. ☐ the assignee of the entire right, title, and interest; or

2. ☐ an assignee of less than the entire right, title and interest
(The extent (by percentage) of its ownership interest is _____%)

in the patent application/patent identified above by virtue of either:

A. ☐ An assignment from the inventor(s) of the patent application/patent identified above. The assignment was recorded in the United States Patent and Trademark Office at Reel _____, Frame _____, or for which a copy thereof is attached.

OR

B. ☐ A chain of title from the inventor(s), of the patent application/patent identified above, to the current assignee as follows:

1. From: _____ To: _____
The document was recorded in the United States Patent and Trademark Office at
Reel _____, Frame _____, or for which a copy thereof is attached.

2. From: _____ To: _____
The document was recorded in the United States Patent and Trademark Office at
Reel _____, Frame _____, or for which a copy thereof is attached.

3. From: _____ To: _____
The document was recorded in the United States Patent and Trademark Office at
Reel _____, Frame _____, or for which a copy thereof is attached.

☐ Additional documents in the chain of title are listed on a supplemental sheet.

☐ As required by 37 CFR 3.73(b)(1)(i), the documentary evidence of the chain of title from the original owner to the assignee was, or concurrently is being, submitted for recordation pursuant to 37 CFR 3.11.

[NOTE: A separate copy (*i.e.*, a true copy of the original assignment document(s)) must be submitted to Assignment Division in accordance with 37 CFR Part 3, to record the assignment in the records of the USPTO. See MPEP 302.08]

The undersigned (whose title is supplied below) is authorized to act on behalf of the assignee.

Signature	Date
Printed or Typed Name	Telephone Number
Title	

This collection of information is required by 37 CFR 3.73(b). The information is required to obtain or retain a benefit by the public which is to file (and by the USPTO to process) an application. Confidentiality is governed by 35 U.S.C. 122 and 37 CFR 1.11 and 1.14. This collection is estimated to take 12 minutes to complete, including gathering, preparing, and submitting the completed application form to the USPTO. Time will vary depending upon the individual case. Any comments on the amount of time you require to complete this form and/or suggestions for reducing this burden, should be sent to the Chief Information Officer, U.S. Patent and Trademark Office, U.S. Department of Commerce, P.O. Box 1450, Alexandria, VA 22313-1450. DO NOT SEND FEES OR COMPLETED FORMS TO THIS ADDRESS. **SEND TO: Commissioner for Patents, P.O. Box 1450, Alexandria, VA 22313-1450.**

If you need assistance in completing the form, call 1-800-PTO-9199 and select option 2.

Privacy Act Statement

The **Privacy Act of 1974 (P.L. 93-579)** requires that you be given certain information in connection with your submission of the attached form related to a patent application or patent. Accordingly, pursuant to the requirements of the Act, please be advised that: (1) the general authority for the collection of this information is 35 U.S.C. 2(b)(2); (2) furnishing of the information solicited is voluntary; and (3) the principal purpose for which the information is used by the U.S. Patent and Trademark Office is to process and/or examine your submission related to a patent application or patent. If you do not furnish the requested information, the U.S. Patent and Trademark Office may not be able to process and/or examine your submission, which may result in termination of proceedings or abandonment of the application or expiration of the patent.

The information provided by you in this form will be subject to the following routine uses:

1. The information on this form will be treated confidentially to the extent allowed under the Freedom of Information Act (5 U.S.C. 552) and the Privacy Act (5 U.S.C 552a). Records from this system of records may be disclosed to the Department of Justice to determine whether disclosure of these records is required by the Freedom of Information Act.
2. A record from this system of records may be disclosed, as a routine use, in the course of presenting evidence to a court, magistrate, or administrative tribunal, including disclosures to opposing counsel in the course of settlement negotiations.
3. A record in this system of records may be disclosed, as a routine use, to a Member of Congress submitting a request involving an individual, to whom the record pertains, when the individual has requested assistance from the Member with respect to the subject matter of the record.
4. A record in this system of records may be disclosed, as a routine use, to a contractor of the Agency having need for the information in order to perform a contract. Recipients of information shall be required to comply with the requirements of the Privacy Act of 1974, as amended, pursuant to 5 U.S.C. 552a(m).
5. A record related to an International Application filed under the Patent Cooperation Treaty in this system of records may be disclosed, as a routine use, to the International Bureau of the World Intellectual Property Organization, pursuant to the Patent Cooperation Treaty.
6. A record in this system of records may be disclosed, as a routine use, to another federal agency for purposes of National Security review (35 U.S.C. 181) and for review pursuant to the Atomic Energy Act (42 U.S.C. 218(c)).
7. A record from this system of records may be disclosed, as a routine use, to the Administrator, General Services, or his/her designee, during an inspection of records conducted by GSA as part of that agency's responsibility to recommend improvements in records management practices and programs, under authority of 44 U.S.C. 2904 and 2906. Such disclosure shall be made in accordance with the GSA regulations governing inspection of records for this purpose, and any other relevant (*i.e.*, GSA or Commerce) directive. Such disclosure shall not be used to make determinations about individuals.
8. A record from this system of records may be disclosed, as a routine use, to the public after either publication of the application pursuant to 35 U.S.C. 122(b) or issuance of a patent pursuant to 35 U.S.C. 151. Further, a record may be disclosed, subject to the limitations of 37 CFR 1.14, as a routine use, to the public if the record was filed in an application which became abandoned or in which the proceedings were terminated and which application is referenced by either a published application, an application open to public inspection or an issued patent.
9. A record from this system of records may be disclosed, as a routine use, to a Federal, State, or local law enforcement agency, if the USPTO becomes aware of a violation or potential violation of law or regulation.

UNITED STATES PATENT AND TRADEMARK OFFICE

Commissioner for Patents
United States Patent and Trademark Office
P.O. Box 1450
Alexandria, VA 22313-1450
www.uspto.gov

Paper No. 16

BENESCH, FRIEDLANDER, COPLAN & ARONOFF LLP
ATTN: IP DEPARTMENT DOCKET CLERK
2300 BP TOWER
200 PUBLIC SQUARE
CLEVELAND, OH 44114

COPY MAILED

SEP 09 2008

OFFICE OF PETITIONS

In re Patent No. 5,472,438	:	
Issue Date: December 5, 1995	:	
Application No. 08/096,031	:	ON PETITION
Filed: July 22, 1993	:	
Attorney Docket No. CWR2164	:	

This is a decision on the renewed petition under 37 CFR 1.378(e), filed June 30, 2008, requesting reconsideration of a prior decision which refused to accept the delayed payment of a maintenance fee under 37 CFR 1.378(c) for the above identified patent.

The petition is not signed by a registered patent attorney or agent of record. However, in accordance with 37 CFR 1.34, the signature of Gregory S. Kolocouris appearing on the correspondence shall constitute a representation to the United States Patent and Trademark Office that he is authorized to represent the particular party on whose behalf he acts

The renewed petition is found to comply with the requirements of 35 U.S.C. 41(c) and 37 CFR 1.378(c) (d) and (e). Accordingly, the petition is **GRANTED**.

The 11 ½ year maintenance fee in this case is hereby accepted and the above-identified patent is reinstated as of the mail date of this decision.

This file is being forwarded to Files Repository.

Telephone inquiries concerning this matter may be directed to the undersigned at (571) 272-3204.

Sherry D. Brinkley
Petitions Examiner
Office of Petitions

UNITED STATES PATENT AND TRADEMARK OFFICE

Commissioner for Patents
United States Patent and Trademark Office
P.O. Box 1450
Alexandria, VA 22313-1450
www.uspto.gov

PAPER NO. 14

RONALD P. KANANEN
MARKS & MURASE, L.L.P.
2001 L STREET, N.W.
SUITE 750
WASHINGTON DC 20036

COPY MAILED

MAY 17 2007

OFFICE OF PETITIONS

ON PETITION

In re Patent No. 5,453,758 :
Issue Date: September 26, 1995 :
Application No. 08/098,896 :
Filed: July 29, 1993 :
Attorney Docket No. SON417 :

This is a decision on the petition under 37 CFR 1.378(b), filed June 30, 2006, to accept the unavoidably delayed payment of a maintenance fee for the above-identified patent.

The petition is **DISMISSED**.

If reconsideration of this decision is desired, a petition for reconsideration under 37 CFR 1.378(e) must be filed within TWO (2) MONTHS from the mail date of this decision. No extension of this 2-month time limit can be granted under 37 CFR 1.136(a) or (b). Any such petition for reconsideration must be accompanied by the petition fee of $400 as set forth in 37 CFR 1.17(f). **The petition for reconsideration should include an exhaustive attempt to provide the lacking item(s) noted below, since, after a decision on the petition for reconsideration, the Director will undertake no further reconsideration or review of the matter.**

A petition to accept the delayed payment of a maintenance fee under 35 USC 41(c) and 37 CFR 1.378(b) must be accompanied by (1) an adequate showing that the delay was unavoidable, since reasonable care was taken to insure that the maintenance fee would be paid timely, (2) payment of the appropriate maintenance fee, unless previously submitted, and (3) payment of the surcharge set forth in 37 CFR 1.20(i)(1). **This petition lacks item (1) above.**

The patent issued on September 26, 1995. Accordingly, the second maintenance fee (7 ½ year) could have been paid during the period from September 26, 2002 through March 26, 2003 without a surcharge, or during the period from March 27, 2003 through September 26, 2003 with a surcharge. Because the second maintenance fee was not received within either of the aforementioned periods of time, the patent expired midnight on September 26, 2003. 35 USC 41(b).

Petitioner states that the failure to pay the 7 ½ year maintenance fee was the result of a clerical error. The firm Rader, Fishman, and Grauer (hereinafter "Rader") was the responsible party for docketing and paying the maintenance fees until they received a notice dated January 10, 2003 from applicant that

stated that the responsibility for the reissue application (and by implication, the original patent) was being transferred to Computer Packages Inc. (hereinafter "CPI"). While Rader was notified of the transfer of responsibility to CPI, it is alleged that due to a clerical error the instant application was coded with an incorrect status code and was not included in the list of applications in the notification given to CPI. Therefore CPI was not apprised that they had responsibility for the application and failed to remit the maintenance fee payment in the corresponding original patent.

A delay resulting from an error (e.g., a docketing error) on the part of an employee in the performance of a clerical function may provide the basis for a showing of "unavoidable" delay, provided it is shown that: (1) the error was the cause of the delay at issue; (2) there was in place a business routine for performing the clerical function that could reasonably be relied upon to avoid errors in its performance; (3) and the employee was sufficiently trained and experienced with regard to the function and routine for its performance that reliance upon such employee represented the exercise of due care. See MPEP 711.03(c)(III)(C)(2).

An adequate showing requires statements by all persons at Sony with direct knowledge of the circumstances surrounding the delay, setting forth the facts, as they know them. Petitioner must supply a thorough explanation of the docketing (at Sony) and call-up system in use and must identify the type of records kept and the person responsible for the maintenance of the system. This showing must include copies of mail ledger, docket sheets, filewrappers and such other records as may exist which would substantiate an error in docketing, and include an indication as to why the system failed in this instance to provide adequate notice that a reply was due. Petitioner must also supply information regarding the training provided to the Sony personnel responsible for the docketing error, degree of supervision of their work, examples of other work functions carried out, and checks on the described work which were used to assure proper execution of assigned tasks.

The explanation provided in the letter dated June 26, 2006 from Sanae Takada from Sony is insufficient to support a showing of unavoidable delay due to docketing error, i.e. there is a lack of evidence showing items (1) thru (3) above. The letter from Takada stated that there was no written procedure for managing the docketing of applications having a related reissue case at the time this error occurred and the personnel responsible for the error was assumed to be an inexperience clerk. Therefore one cannot deem that the cause of the delay was unavoidable since there is no showing that applicant was careful or prudent in his most important business in relying on Sony's system and personnel within the meaning of *In re Katrapat.*

Accordingly, the showing of record fails to demonstrate that the delay was unavoidable within the meaning of 37 CFR 1.378(b) and 35 USC 41 (c).

Further correspondence with respect to this matter should be addressed as follows:

By Mail: Mail Stop PETITION
Commissioner for Patents
Post Office Box 1450
Alexandria, VA 22313-1450

By Hand: U. S. Patent and Trademark Office
Customer Service Window, Mail Stop Petitions
Randolph Building

401 Dulany Street
Alexandria, VA 22314

The centralized facsimile number is (571) 273-8300.

Telephone inquiries should be directed to Amelia Au at (571) 272-7414.

Brian Hearn
Petitions Examiner
Office of Petitions

UNITED STATES PATENT AND TRADEMARK OFFICE

Commissioner for Patents
United States Patent and Trademark Office
P.O. Box 1450
Alexandria, VA 22313-1450
www.uspto.gov

#16

RONALD P KANANEN
RADER FISHMAN & GRAUER PLLC
LION BUILDING
1233 20TH STREET N.W., SUITE 501
WASHINGTON, DC 20036

COPY MAILED

SEP 28 2007

OFFICE OF PETITIONS

In re Patent No.5,453,758
issue Date: September 26, 1995
Application No. 08/098,896
Filed: July 29, 1993
For: Input Apparatus.

:REQUIREMENT FOR INFORMATION

This is a decision on the renewed petition under 37 CFR 1.378(b) filed July 17, 2007, to accept as unavoidable delayed a maintenance fee for the above-identified patent.

The petition under 37 CFR 1.378(b) is **dismissed**.

If reconsideration of this decision is desired, a reply responding to the issues noted in more detail below must be filed within TWO (2) MONTHS from the mail date of this decision. No extension of this 2-month time limit can be granted under 37 CFR 1.136(a) or (b).

The renewed petition raises several issues requiring additional information. First, it is not clear that Ms. Miyamoto used the appropriate form. The form employed is entitled "Request for Final Disposition." The title of this form appears inconsistent with the situation where a patent is to be maintained in force; rather is seems to match the circumstance where an application or patent is to be permitted to lapse. Was this form employed because Ms. Miyamoto had assumed (incorrectly) the prior patent/application was withdrawn/dismissed, as indicated by her use of status code 9? If she had not made that incorrect assumption, would she have used the same form? Furthermore, what was the proper clerical routine for the instance where, as here, the prior patent is in force, but there is a pending reissue application? What form would be employed? What status code is employed in that situation? Was Ms. Miyamoto properly trained in the clerical routine, and informed of the proper status code and her work reviewed for the instance where a patent is in force and a pending reissue application has been filed? If so, please supply such evidence and reviews. If Ms. Miyamoto was sufficiently trained and experienced in the specific circumstances applicable to this specific instance, then why did Mr. Tanaka have to approve her work? Was Mr. Tanaka properly trained in the clerical routine, and proper status code and his work reviewed for the instance where a patent is in force and a pending reissue application has been filed? If so, please supply such evidence and reviews.

Any renewed petition may be addressed as follows:

By mail: Mail Stop PETITIONS
Commissioner for Patents
Post Office Box 1450
Alexandria, VA 22313-1450

By hand: Customer Service Window
Randolph Building 401 Dulany Street
Alexandria, VA 22314:

By fax: (571) 273-8300
ATTN: Office of Petitions

Any inquiries concerning this decision may be directed to the undersigned at (571) 272-3217.

Brian Hearn
Petitions Examiner

UNITED STATES PATENT AND TRADEMARK OFFICE

Commissioner for Patents
United States Patent and Trademark Office
P.O. Box 1450
Alexandria, VA 22313-1450
www.uspto.gov

Paper No. 18

MAILED

MAY 20 2009

OFFICE OF PETITIONS

RADER FISHMAN & GRAUER PLLC
LION BUILDING
1233 20TH STREET N.W., SUITE 501
WASHINGTON DC 20036

In re Patent No. 5,453,758 :
Issue Date: September 26, 1995 : Decision on Petition
Application No. 08/098,896 :
Filing Date: July 29, 1993 :
Attorney Docket No. SON417 :

This is a decision on the reconsideration petition under 37 CFR 1.378(e) filed July 17, 2007 and supplemented on November 28, 2007 in response to a Request for Information, mailed September 28, 2007, to reinstate the above-identified patent.

The petition is **DENIED**.[1]

Background

The patent issued September 26, 1995. The 7 ½ year maintenance fee could have been paid from September 26, 2002 through March 26, 2003 without a surcharge, or from March 27, 2003 through September 26, 2003 with a surcharge. The Office did not receive a timely payment. Accordingly, the patent expired September 27, 2003 for failure to timely submit the first maintenance fee.

A petition under 37 CFR 1.378(b) was filed on June 30, 2006. The petition was dismissed in a decision mailed May 17, 2007. On July 17, 2007 petitioner filed a reconsideration petition under 37 CFR 1.378(e). In response, on September 28, 2007, the Office mailed a Request for Information. On November 28, 2007, petitioner filed a petition for reconsideration under 37 CFR 1.378(e).

The contents of the prior decision on petition and the Request for Information are incorporated by reference into the present decision.

[1] This decision may be viewed as a final agency action within the meaning of 5 USC § 704 for purposes of seeking judicial review. See MPEP 1002.02. The terms of 37 C.F.R. 1.137(d) *do not apply* to this decision.

Applicable Statute and Regulation

35 U.S.C .41(c)(1) states that:

> "The Director may accept the payment of any maintenance fee required by subsection (b) of this section which is made within twenty-four months after the six-month grace period if the delay is shown to the satisfaction of the Director to have been unintentional, or at any time after the six-month grace period if the delay is shown to the satisfaction of the Director to have been unavoidable."

37 CFR 1.378(b) states that:

> Any petition to accept an unavoidably delayed payment of a maintenance fee filed under paragraph (a) of this section must include:
>
> (1) the required maintenance fee set forth in §1.20 (e)-(g);
>
> (2) the surcharge set forth in § 1.20(i)(1); and
>
> (3) a showing that the delay was unavoidable since reasonable care was taken to ensure that the maintenance fee would be paid timely and that the petition was filed promptly after the patentee was notified of, or otherwise became aware of, the expiration of the patent. The showing must enumerate the steps taken to ensure timely payment of the maintenance fee, the date and the manner in which patentee became aware of the expiration of the patent, and the steps taken to file the petition promptly.

The Burden of Proof

The statute requires a "showing" by petitioner. Specifically 35 U.S.C. 41(c)(1) states, "The Director may accept the payment ... if the delay is shown to the satisfaction of the Director to have been unavoidable." Therefore, petitioner has the burden of proof.

Opinion

Petitioner asserts that the delay in payment of the second maintenance fee was due to a docketing error. Ms. Nao Miyamoto, a member of Sony's foreign patent administration group, inadvertently completed an incorrect form, "Request for Final Disposition," and entered status code 9, meaning "application withdrawn/dismissed," for the above-identified patent on May 6, 1998. This information was entered into Sony's docketing system. On the same day that she completed the "Request for Final Disposition" form for the patent, she entered that an application was filed for the reissue application in Sony's docketing system (November 28, 2007 petition, p. 4). Her supervisor, Mr. Keisuke Tanaka reviewed the work of Ms. Miyamoto in

1998. One of his duties was to assure proper execution of tasks assigned to Ms. Miyamoto (July 17, 2007 petition, p. 12). Mr. Tanaka approved the use of the "Request for Final Disposition" form and the status code selection, as shown by his stamp on the form (July 17, 2007 petition, p. 7). This direction was not reviewed and confirmed by the individual responsible for annuities (July 17, 2007 petition, p. 8). As a result of these actions, the patent was dropped from Sony's docketing system and was not included in the list of patents given to Computer Packages Inc. (CPI) for scheduling and paying maintenance fees. CPI did not pay the 7 ½ year maintenance fee.

A late maintenance fee is considered under the same standard as that for reviving an abandoned application under 35 U.S.C. 133 because 35 U.S.C. 41(c)(1) uses the identical language, i.e., "unavoidable delay". Ray v. Lehman, 55 F.3d 606, 608-609, 34 USPQ2d 1786, 1787 (Fed. Cir. 1995)(quoting In Re Patent No. 4,409,763, 7 USPQ2d 1798, 1800 (Comm'r Pat 1898)). Decisions on reviving abandoned applications have adopted the reasonably prudent person standard in determining if the delay was unavoidable. Ex Parte Pratt, 1887 Dec. Comm'r Pat. 31, 32-33 (Comm'r Pat. 1887)(the term "unavoidable" "is applicable to ordinary human affairs, and requires no more or greater care or diligence than is generally used by prudent and careful men in relation to their most important business"); In Re Mattullath, 38 App. D.C. 497, 514-515 (D.C. Cir. 1912); Ex Parte Henrich, 1913 Dec. Comm'r Pat. 139, 141 (Comm'r Pat. 1913). In addition, decisions on revival are made on a "case-by-case basis, taking all the facts and circumstances into account." Smith v. Mossinghoff, 671 F.2d 533, 538, 213 USPQ 977, 982 (D.C. Cir. 1982). Finally, a petition to revive an application as unavoidably abandoned cannot be granted where a petitioner has failed to meet his or her burden of establishing the cause of the unavoidable delay. Haines v. Quigg, 673 F. Supp. 314, 5 USPQ2d 1130 (N.D. Ind. 1987).

35 U.S.C. 41(c) requires the payment of fees at specified intervals to maintain a patent in force, rather than some response to a specific action by the Office under 35 U.S.C. 133. Consequently, a reasonably prudent person in the exercise of due care and diligence will take steps to ensure the timely payment of maintenance fees. Ray, 55 F.3d at 609, 34 USPQ2d at 1788. Thus, it follows that an adequate showing of unavoidable delay in payment of a maintenance fee, within the meaning of 35 U.S.C. 41(c) and 37 CFR 1.378(b)(3), requires a showing of the steps taken to ensure the timely payment of the maintenance fees for the patent. Id. Where the record fails to disclose that the patentee took reasonable steps, or discloses that the patentee took no steps, to ensure timely payment of the maintenance fee, 35 U.S.C. 41(c) and 37 CFR 1.378(b)(3) preclude acceptance of the delayed payment of the maintenance fee.

The showing of record is inadequate to establish unavoidable delay within the meaning of 37 CFR 1.378(b)(3).

Per MPEP 2590 Acceptance of Delayed Payment of Maintenance Fee in Expired Patent to Reinstate Patent, I. Unavoidable Delay: "...[E]vidence that despite reasonable care on behalf of the patentee and/or the patentee's agents, and reasonable steps to ensure timely payment, the maintenance fee was unavoidably not paid, could be submitted in support of an argument that the delay in payment was unavoidable. For example, an error in a docketing system could possibly result in a finding that a delay in payment was unavoidable if it were shown that reasonable care was exercised in designing and operating the system and that the

patentee took reasonable steps to ensure that the patent was entered into the system to ensure timely payment of the maintenance fees.

Petitioner has failed to establish that reasonable care was exercised in operating the docketing system.

The person responsible for entering information into the docketing database was Ms. Miyamoto. Ms. Miyamoto entered the filing information of the reissue application on May 6, 1998. On the same day, Ms. Miyamoto entered a status code to withdraw/dismiss the present patent from the docketing system (status code 9) (July 17, 2007 petition, p. 9). Routine practices and procedures within Sony at the time when the error occurred provided for the designation of status code 9 in the database of the original patent once the original patent reissues (July 17, 2007 petition, p. 8).

Petitioner has not shown that relying on Ms. Miyamoto represented the exercise of due care. Petitioner has not fully described Ms. Miyamoto's training or experience or reliability. Petitioner has not established that Ms. Miyamoto was properly trained in the clerical routine and informed of the proper status code and her work reviewed for the instance where a patent is in force and a pending reissue application has been filed. Petitioner has not provided a training manual or other written directions provided to Ms. Miyamoto. As stated by Sanae Takada in Exhibit G to the original petition, ".. There was not a written manual for managing reissue cases in our section at that time. (Our present written manual was made in July 1999.) So I assume that an inexperienced clerk might input the status code "07" = withdrawal to the '758 patent by error although the application for the reissue for the '758 was still pending." (Status code 07 was formerly known as status code 9 (July 17, 2007 petition, p. 9)).

Petitioner states that Ms. Miyamoto received training from two experienced workers, both of whom have since left Sony. Ms. Miyamoto has left Sony, as well. Petitioner has not provided written reviews of <u>any</u> of Ms. Miyamoto's work, let alone whether or not her work had been reviewed for the instance where a reissue application was pending and the underlying patent had not lapsed.

Mr. Tanaka reviewed the work of Ms. Miyamoto. Mr. Tanaka approved the use of the "Request for Final Disposition" form, as well as the status 9 code, as shown by his stamp on the form (July 17, 2007 petition, p. 7). He approved the completed form on May 7, 1998, notwithstanding an instruction found within status code 9 to process after receiving the Letters Patent for the reissue (July 17, 2007 petition, p 8). Petitioner believes Mr. Tanaka was properly trained in the clerical routine and proper status code (November 28, 2007 petition, p. 9). However, petitioner has provided no evidence to support the belief. Mr. Tanaka left Sony in 2005 (November 28, 2007 petition, p. 9).

Petitioner states that the Request for Final Disposition requires a confirmation of the person assigned to annuity matters. Ms. Masako Motosugi was assigned to annuity matters during the time that the error occurred. However, there is no indication of the Request being forwarded to Ms. Motosugi for her review and confirmation. Ms. Motosugi left Sony in 2006 (July 17, 2007 petition, p. 8).

Thus, three levels of the docketing system failed. Ms. Miyamoto selected an incorrect form and an incorrect code for the patent, Mr. Tanaka reviewed and approved the incorrect form and incorrect code for the patent, and Ms. Motosugi, the individual assigned to annuity matters, never reviewed and confirmed the instruction to abandon/withdraw the patent. Reasonable care was not exercised in the operation of the docketing system. Petitioner has not established that Ms. Miyamoto and Mr. Tanaka were sufficiently trained and experienced with regard to the clerical function and routine for its performance that reliance upon them represented the exercise of due care.

It is noted that petitioner has not provided any evidence that attempts to contact Ms. Miyamoto, Mr. Tanaka, Ms. Motosugi, or other individuals with knowledge of pertinent events or performance appraisals or training were undertaken.

The record, as it stands now, fails to show that petitioner took the due care of a reasonably prudent and careful person, in relation to his most important business. Pratt, supra. The record fails to establish that reasonable care was exercised in operating the docketing system.

Decision

The prior decision which refused to accept under 37 CFR 1.378(b) the delayed payment of a maintenance fee for the above-identified patent has been reconsidered. For the reasons herein and stated in the previous decision and request for information, the entire delay in this case cannot be regarded as unavoidable within the meaning of 35 U.S.C. 41(c)(1) and 37 CFR 1.378(b). Therefore, the petition is **denied**. As stated in 37 CFR 1.378(e), the Office will not further consider or review the matter of the reinstatement of the patent.

A review of Office financial records for this patent reveals that despite the fact that petitioner authorized payment, the $700.00 surcharge, the 7 ½ year maintenance fee, and the 11 ½ year maintenance fee have not been charged. Deposit account no. 18-0013 will be charged the $700.00 surcharge. However, as the petition is denied, no maintenance fees will be charged. The reconsideration fee of $400.00, submitted on mailroom date July 17, 2007, will be retained.

The patent file is being forwarded to Files Repository.

Telephone inquiries may be directed to Petitions Attorney Shirene Willis Brantley at (571) 272-3230.

Charles Pearson
Director
Office of Petitions

UNITED STATES PATENT AND TRADEMARK OFFICE

Commissioner for Patents
United States Patent and Trademark Office
P.O. Box 1450
Alexandria, VA22313-1450
www.uspto.gov

PILLSBURY WINTHROP SHAW PITTMAN, LLP
P.O. BOX 10500
MCLEAN VA 22102

COPY MAILED

APR 25 2007

OFFICE OF PETITIONS

ON PETITION

In re Patent No. 5,744,144 :
Issue Date: April 28, 1998 :
Application No. 08/099,354 :
Filed: July 30, 1993 :
Attorney Docket No: 202246 :

This is a decision on the petition, filed December 5, 2006, under 37 CFR 1.378(c) to accept the unintentionally delayed payment of a maintenance fee for the above-identified patent.

The petition is GRANTED.

The patent issued April 28. 1998. Accordingly, the second maintenance fee due could have been paid during the period from April 28, 2005 through October 30, 2005, or with a surcharge during the period from October 31, 2005 through April 28, 2006. This patent expired on April 28, 2006. Therefore, since a petition was filed within twenty-four months after the six-month grace period provided in 37 CFR 1.362(e), this petition was timely filed under the provisions of 37 CFR 1.378(c).

Accordingly, the maintenance fee in this case is hereby accepted and the above-identified patent is hereby reinstated as of the mail date of this decision. Fees in the amount of $2300.00 for the second maintenance fee and $1,640.00 have been charged to deposit account no. 03-3975.

Telephone inquiries concerning this matter may be directed to the undersigned Petitions Attorney at (571) 272-3212.

Patricia Faison-Ball

Patricia Faison-Ball
Senior Petitions Attorney
Office of Petitions

Under the Paperwork Reduction Act of 1995, no persons are required to respond to a collection of information unless it displays valid OMB control number.

PETITION TO ACCEPT UNINTENTIONALLY DELAYED PAYMENT OF MAINTENANCE FEE IN AN EXPIRED PATENT (37 CFR 1.378(c))

Patent Number	Issue Date (YYYY-MM-DD)	Application Number	Filing Date (YYYY-MM-DD)	Docket Number (if applicable)
5,452,133	1995-09-19	08/101,544	1993-08-02	218-08

CAUTION: Maintenance fee (and surcharge, if any) payment must correctly identify: (1) the patent number and (2) the application number of the actual U.S. application leading to issuance of that patent to ensure the fee(s) is/are associated with the correct patent. 37 CFR 1.366(c) and (d).

SMALL ENTITY
☒ Patentee claims, or has previously claimed, small entity status. See 37 CFR 1.27.

LOSS OF ENTITLEMENT TO SMALL ENTITY STATUS
☐ Patentee is no longer entitled to small entity status. See 37 CFR 1.27(g)

NOT Small Entity			Small Entity		
	Fee	Code		Fee	Code
○	3 ½ year	(1551)	○	3 ½ year	(2551)
○	7 ½ year	(1552)	○	7 ½ year	(2552)
○	11 ½ year	(1553)	◉	11 ½ year	(2553)

SURCHARGE
The surcharge required by 37 CFR 1.20(i)(2) (Fee Code 1558) must be paid as a condition of accepting unintentionally delayed payment of the maintenance fee.

MAINTENANCE FEE (37 CFR 1.20(e)-(g))
The appropriate maintenance fee must be submitted with this petition.

STATEMENT
THE UNDERSIGNED CERTIFIES THAT THE DELAY IN PAYMENT OF THE MAINTENANCE FEE TO THIS PATENT WAS UNINTENTIONAL

PETITIONER(S) REQUEST THAT THE DELAYED PAYMENT OF THE MAINTENANCE FEE BE ACCEPTED AND THE PATENT REINSTATED

THIS PORTION MUST BE COMPLETED BY THE SIGNATORY OR SIGNATORIES

37 CFR 1.378(d) states: "Any petition under this section must be signed by an attorney or agent registered to practice before the Patent and Trademark Office, or by the patentee, the assignee, or other party in interest."

I certify, in accordance with 37 CFR 1.4(d)(4) that I am

◉ An attorney or agent registered to practice before the Patent and Trademark Office

○ A sole patentee

○ A joint patentee; I certify that I am authorized to sign this submission on behalf of all the other patentees.

○ A joint patentee; all of whom are signing this e-petition

○ The assignee of record of the entire interest

Patent Practitioner			
A signature of the applicant or representative is required in accordance with 37 CFR 1.33 and 10.18. Please see 37 CFR 1.4(d) for the form of the signature			
Signature	/michaelcurtis/	Date (YYYY-MM-DD)	2009-01-07
Name	Michael Curtis	Registration Number	54053

This collection of information is required by 37 CFR 1.378(c). The information is required to obtain or retain a benefit by the public which is to file (and by the USPTO to process) an application. Confidentiality is governed by 35 U.S.C. 122 and 37 CFR 1.11 and 1.14. This collection is estimated to take 1 hour to complete, including gathering, preparing, and submitting the completed application form to the USPTO. Time will vary depending upon the individual case. Any comments on the amount of time you require to complete this form and/ or suggestions for reducing this burden, should be sent to the Chief Information Officer, U.S. Patent and Trademark Office, U.S. Department of Commerce, P.O. Box 1450, Alexandria, VA 22313-1450. DO NOT SEND FEES OR COMPLETED FORMS TO THIS ADDRESS. **This form can only be used when in conjunction with EFS-Web. If this form is mailed to the USPTO, it may cause delays in reinstating the patent.**

Privacy Act Statement

The Privacy Act of 1974 (P.L. 93-579) requires that you be given certain information in connection with your submission of the attached form related to a patent application or patent. Accordingly, pursuant to the requirements of the Act, please be advised that: (1) the general authority for the collection of this information is 35 U.S.C. 2(b)(2); (2) furnishing of the information solicited is voluntary; and (3) the principal purpose for which the information is used by the U.S. Patent and Trademark Office is to process and/or examine your submission related to a patent application or patent. If you do not furnish the requested information, the U.S. Patent and Trademark Office may not be able to process and/or examine your submission, which may result in termination of proceedings or abandonment of the application or expiration of the patent.

The information provided by you in this form will be subject to the following routine uses:

1. The information on this form will be treated confidentially to the extent allowed under the Freedom of Information Act (5 U.S.C. 552) and the Privacy Act (5 U.S.C. 552a). Records from this system of records may be disclosed to the Department of Justice to determine whether the Freedom of Information Act requires disclosure of these record s.

2. A record from this system of records may be disclosed, as a routine use, in the course of presenting evidence to a court, magistrate, or administrative tribunal, including disclosures to opposing counsel in the course of settlement negotiations.

3. A record in this system of records may be disclosed, as a routine use, to a Member of Congress submitting a request involving an individual, to whom the record pertains, when the individual has requested assistance from the Member with respect to the subject matter of the record.

4. A record in this system of records may be disclosed, as a routine use, to a contractor of the Agency having need for the information in order to perform a contract. Recipients of information shall be required to comply with the requirements of the Privacy Act of 1974, as amended, pursuant to 5 U.S.C. 552a(m).

5. A record related to an International Application filed under the Patent Cooperation Treaty in this system of records may be disclosed, as a routine use, to the International Bureau of the World Intellectual Property Organization, pursuant to the Patent Cooperation Treaty.

6. A record in this system of records may be disclosed, as a routine use, to another federal agency for purposes of National Security review (35 U.S.C. 181) and for review pursuant to the Atomic Energy Act (42 U.S.C. 218(c)).

7. A record from this system of records may be disclosed, as a routine use, to the Administrator, General Services, or his/her designee, during an inspection of records conducted by GSA as part of that agency's responsibility to recommend improvements in records management practices and programs, under authority of 44 U.S.C. 2904 and 2906. Such disclosure shall be made in accordance with the GSA regulations governing inspection of records for this purpose, and any other relevant (i.e., GSA or Commerce) directive. Such disclosure shall not be used to make determinations about individuals.

8. A record from this system of records may be disclosed, as a routine use, to the public after either publication of the application pursuant to 35 U.S.C. 122(b) or issuance of a patent pursuant to 35 U.S.C. 151. Further, a record may be disclosed, subject to the limitations of 37 CFR 1.14, as a routine use, to the public if the record was filed in an application which became abandoned or in which the proceedings were terminated and which application is referenced by either a published application, an application open to public inspections or an issued patent.

9. A record from this system of records may be disclosed, as a routine use, to a Federal, State, or local law enforcement agency, if the USPTO becomes aware of a violation or potential violation of law or regulation.

UNITED STATES PATENT AND TRADEMARK OFFICE

Commissioner for Patents
United States Patent and Trademark Office
P.O. Box 1450
Alexandria, VA 22313-1450
www.uspto.gov

In re Patent No. 5452133
Issue Date: September 19,1995
Application No. 08101544
Filed: August 2,1993
Attorney Docket No. 218-08

:DECISION GRANTING PETITION
:UNDER 37 CFR 1.378(c)

This is a decision on the electronic petition, filed January 7,2009 ,under 37 CFR 1.378(c) to accept the unintentionally delayed payment of the 11.5 year maintenance fee for the above-identified patent.

The petition is **GRANTED**.

The maintenance fee is accepted, and the above-identified patent reinstated as of January 7,2009 . This decision also constitutes notice that the fee has been accepted. An electronic copy of the petition and this decision has been created as an entry in the Image File Wrapper. Nevertheless, petitioner should print and retain an independent copy.

Telephone inquiries related to this electronic decision should be directed to the Electronic Business Center at 1-866-217-9197.

PTO/SB/66 (03-09)
Approved for use through 03/31/2012. OMB 0651-0016
U.S. Patent and Trademark Office: U.S. DEPARTMENT OF COMMERCE
Under the Paperwork Reduction Act of 1995, no persons are required to respond to a collection of information unless it displays valid OMB control number.

PETITION TO ACCEPT UNINTENTIONALLY DELAYED PAYMENT OF MAINTENANCE FEE IN AN EXPIRED PATENT (37 CFR 1.378(c))

Patent Number	Issue Date (YYYY-MM-DD)	Application Number	Filing Date (YYYY-MM-DD)	Docket Number (if applicable)
5,528,507	1996-06-18	08/104,750	1993-08-11	5056

CAUTION: Maintenance fee (and surcharge, if any) payment must correctly identify: (1) the patent number and (2) the application number of the actual U.S. application leading to issuance of that patent to ensure the fee(s) is/are associated with the correct patent. 37 CFR 1.366(c) and (d).

SMALL ENTITY

☐ Patentee claims, or has previously claimed, small entity status. See 37 CFR 1.27.

LOSS OF ENTITLEMENT TO SMALL ENTITY STATUS

☐ Patentee is no longer entitled to small entity status. See 37 CFR 1.27(g)

NOT Small Entity			Small Entity		
	Fee	Code		Fee	Code
○	3 ½ year	(1551)	○	3 ½ year	(2551)
○	7 ½ year	(1552)	○	7 ½ year	(2552)
◉	11 ½ year	(1553)	○	11 ½ year	(2553)

SURCHARGE

The surcharge required by 37 CFR 1.20(i)(2) (Fee Code 1558) must be paid as a condition of accepting unintentionally delayed payment of the maintenance fee.

MAINTENANCE FEE (37 CFR 1.20(e)-(g))

The appropriate maintenance fee must be submitted with this petition.

STATEMENT

THE UNDERSIGNED CERTIFIES THAT THE DELAY IN PAYMENT OF THE MAINTENANCE FEE TO THIS PATENT WAS UNINTENTIONAL

PETITIONER(S) REQUEST THAT THE DELAYED PAYMENT OF THE MAINTENANCE FEE BE ACCEPTED AND THE PATENT REINSTATED

THIS PORTION MUST BE COMPLETED BY THE SIGNATORY OR SIGNATORIES

37 CFR 1.378(d) states: "Any petition under this section must be signed by an attorney or agent registered to practice before the Patent and Trademark Office, or by the patentee, the assignee, or other party in interest."

I certify, in accordance with 37 CFR 1.4(d)(4) that I am

◉ An attorney or agent registered to practice before the Patent and Trademark Office

○ A sole patentee

○ A joint patentee; I certify that I am authorized to sign this submission on behalf of all the other patentees.

○ A joint patentee; all of whom are signing this e-petition

○ The assignee of record of the entire interest

Patent Practitioner			
A signature of the applicant or representative is required in accordance with 37 CFR 1.33 and 10.18. Please see 37 CFR 1.4(d) for the form of the signature			
Signature	/Seth L. Hudson/	Date (YYYY-MM-DD)	2009-11-17
Name	Seth L. Hudson	Registration Number	48281

This collection of information is required by 37 CFR 1.378(c). The information is required to obtain or retain a benefit by the public which is to file (and by the USPTO to process) an application. Confidentiality is governed by 35 U.S.C. 122 and 37 CFR 1.11 and 1.14. This collection is estimated to take 1 hour to complete, including gathering, preparing, and submitting the completed application form to the USPTO. Time will vary depending upon the individual case. Any comments on the amount of time you require to complete this form and/ or suggestions for reducing this burden, should be sent to the Chief Information Officer, U.S. Patent and Trademark Office, U.S. Department of Commerce, P.O. Box 1450, Alexandria, VA 22313-1450. DO NOT SEND FEES OR COMPLETED FORMS TO THIS ADDRESS. **This form can only be used when in conjunction with EFS-Web. If this form is mailed to the USPTO, it may cause delays in reinstating the patent.**

Privacy Act Statement

The Privacy Act of 1974 (P.L. 93-579) requires that you be given certain information in connection with your submission of the attached form related to a patent application or patent. Accordingly, pursuant to the requirements of the Act, please be advised that: (1) the general authority for the collection of this information is 35 U.S.C. 2(b)(2); (2) furnishing of the information solicited is voluntary; and (3) the principal purpose for which the information is used by the U.S. Patent and Trademark Office is to process and/or examine your submission related to a patent application or patent. If you do not furnish the requested information, the U.S. Patent and Trademark Office may not be able to process and/or examine your submission, which may result in termination of proceedings or abandonment of the application or expiration of the patent.

The information provided by you in this form will be subject to the following routine uses:

1. The information on this form will be treated confidentially to the extent allowed under the Freedom of Information Act (5 U.S.C. 552) and the Privacy Act (5 U.S.C. 552a). Records from this system of records may be disclosed to the Department of Justice to determine whether the Freedom of Information Act requires disclosure of these records.

2. A record from this system of records may be disclosed, as a routine use, in the course of presenting evidence to a court, magistrate, or administrative tribunal, including disclosures to opposing counsel in the course of settlement negotiations.

3. A record in this system of records may be disclosed, as a routine use, to a Member of Congress submitting a request involving an individual, to whom the record pertains, when the individual has requested assistance from the Member with respect to the subject matter of the record.

4. A record in this system of records may be disclosed, as a routine use, to a contractor of the Agency having need for the information in order to perform a contract. Recipients of information shall be required to comply with the requirements of the Privacy Act of 1974, as amended, pursuant to 5 U.S.C. 552a(m).

5. A record related to an International Application filed under the Patent Cooperation Treaty in this system of records may be disclosed, as a routine use, to the International Bureau of the World Intellectual Property Organization, pursuant to the Patent Cooperation Treaty.

6. A record in this system of records may be disclosed, as a routine use, to another federal agency for purposes of National Security review (35 U.S.C. 181) and for review pursuant to the Atomic Energy Act (42 U.S.C. 218(c)).

7. A record from this system of records may be disclosed, as a routine use, to the Administrator, General Services, or his/her designee, during an inspection of records conducted by GSA as part of that agency's responsibility to recommend improvements in records management practices and programs, under authority of 44 U.S.C. 2904 and 2906. Such disclosure shall be made in accordance with the GSA regulations governing inspection of records for this purpose, and any other relevant (i.e., GSA or Commerce) directive. Such disclosure shall not be used to make determinations about individuals.

8. A record from this system of records may be disclosed, as a routine use, to the public after either publication of the application pursuant to 35 U.S.C. 122(b) or issuance of a patent pursuant to 35 U.S.C. 151. Further, a record may be disclosed, subject to the limitations of 37 CFR 1.14, as a routine use, to the public if the record was filed in an application which became abandoned or in which the proceedings were terminated and which application is referenced by either a published application, an application open to public inspections or an issued patent.

9. A record from this system of records may be disclosed, as a routine use, to a Federal, State, or local law enforcement agency, if the USPTO becomes aware of a violation or potential violation of law or regulation.

UNITED STATES PATENT AND TRADEMARK OFFICE

Commissioner for Patents
United States Patent and Trademark Office
P.O. Box 1450
Alexandria, VA 22313-1450
www.uspto.gov

In re Patent No. 5528507
Issue Date: June 18,1996
Application No. 08104750
Filed: August 11,1993
Attorney Docket No. 27550

:
:DECISION GRANTING PETITION
:UNDER 37 CFR 1.378(c)
:

This is a decision on the electronic petition, filed November 17,2009 ,under 37 CFR 1.378(c) to accept the unintentionally delayed payment of the 11.5 year maintenance fee for the above-identified patent.

The petition is **GRANTED**.

The maintenance fee is accepted, and the above-identified patent reinstated as of November 17,2009 . This decision also constitutes notice that the fee has been accepted. An electronic copy of the petition and this decision has been created as an entry in the Image File Wrapper. Nevertheless, petitioner should print and retain an independent copy.

Telephone inquiries related to this electronic decision should be directed to the Electronic Business Center at 1-866-217-9197.

Approved for use through 04/30/2009. OMB 0651-0016
U.S. Patent and Trademark Office: U.S. DEPARTMENT OF COMMERCE
Under the Paperwork Reduction Act of 1995, no persons are required to respond to a collection of information unless it displays valid OMB control number.

PETITION TO ACCEPT UNINTENTIONALLY DELAYED PAYMENT OF MAINTENANCE FEE IN AN EXPIRED PATENT (37 CFR 1.378(c))

Patent Number	Issue Date (YYYY-MM-DD)	Application Number	Filing Date (YYYY-MM-DD)	Docket Number (if applicable)
5491362	1996-02-13	08106146	1993-08-13	A 052162USB

CAUTION: Maintenance fee (and surcharge, if any) payment must correctly identify: (1) the patent number and (2) the application number of the actual U.S. application leading to issuance of that patent to ensure the fee(s) is/are associated with the correct patent. 37 CFR 1.366(c) and (d).

SMALL ENTITY
☐ Patentee claims, or has previously claimed, small entity status. See 37 CFR 1.27.

LOSS OF ENTITLEMENT TO SMALL ENTITY STATUS
☐ Patentee is no longer entitled to small entity status. See 37 CFR 1.27(g)

NOT Small Entity		Small Entity	
Fee	Code	Fee	Code
○ 3 ½ year	(1551)	○ 3 ½ year	(2551)
○ 7 ½ year	(1552)	○ 7 ½ year	(2552)
◉ 11 ½ year	(1553)	○ 11 ½ year	(2553)

SURCHARGE
The surcharge required by 37 CFR 1.20(i)(2) (Fee Code 1558) must be paid as a condition of accepting unintentionally delayed payment of the maintenance fee.

MAINTENANCE FEE (37 CFR 1.20(e)-(g))
The appropriate maintenance fee must be submitted with this petition.

STATEMENT
THE UNDERSIGNED CERTIFIES THAT THE DELAY IN PAYMENT OF THE MAINTENANCE FEE TO THIS PATENT WAS UNINTENTIONAL

PETITIONER(S) REQUEST THAT THE DELAYED PAYMENT OF THE MAINTENANCE FEE BE ACCEPTED AND THE PATENT REINSTATED

THIS PORTION MUST BE COMPLETED BY THE SIGNATORY OR SIGNATORIES

37 CFR 1.378(d) states: "Any petition under this section must be signed by an attorney or agent registered to practice before the Patent and Trademark Office, or by the patentee, the assignee, or other party in interest."

I certify, in accordance with 37 CFR 1.4(d)(4) that I am

◉ An attorney or agent registered to practice before the Patent and Trademark Office

○ A sole patentee

○ A joint patentee; I certify that I am authorized to sign this submission on behalf of all the other patentees.

○ A joint patentee; all of whom are signing this e-petition

○ The assignee of record of the entire interest

Patent Practitioner			
A signature of the applicant or representative is required in accordance with 37 CFR 1.33 and 10.18. Please see 37 CFR 1.4(d) for the form of the signature			
Signature	/Aaron M Waxler/	Date (YYYY-MM-DD)	2008-12-16
Name	Aaron Waxler	Registration Number	48027

This collection of information is required by 37 CFR 1.378(c). The information is required to obtain or retain a benefit by the public which is to file (and by the USPTO to process) an application. Confidentiality is governed by 35 U.S.C. 122 and 37 CFR 1.11 and 1.14. This collection is estimated to take 1 hour to complete, including gathering, preparing, and submitting the completed application form to the USPTO. Time will vary depending upon the individual case. Any comments on the amount of time you require to complete this form and/ or suggestions for reducing this burden, should be sent to the Chief Information Officer, U.S. Patent and Trademark Office, U.S. Department of Commerce, P.O. Box 1450, Alexandria, VA 22313-1450. DO NOT SEND FEES OR COMPLETED FORMS TO THIS ADDRESS. **This form can only be used when in conjunction with EFS-Web. If this form is mailed to the USPTO, it may cause delays in reinstating the patent.**

Privacy Act Statement

The Privacy Act of 1974 (P.L. 93-579) requires that you be given certain information in connection with your submission of the attached form related to a patent application or patent. Accordingly, pursuant to the requirements of the Act, please be advised that: (1) the general authority for the collection of this information is 35 U.S.C. 2(b)(2); (2) furnishing of the information solicited is voluntary; and (3) the principal purpose for which the information is used by the U.S. Patent and Trademark Office is to process and/or examine your submission related to a patent application or patent. If you do not furnish the requested information, the U.S. Patent and Trademark Office may not be able to process and/or examine your submission, which may result in termination of proceedings or abandonment of the application or expiration of the patent.

The information provided by you in this form will be subject to the following routine uses:

1. The information on this form will be treated confidentially to the extent allowed under the Freedom of Information Act (5 U.S.C. 552) and the Privacy Act (5 U.S.C. 552a). Records from this system of records may be disclosed to the Department of Justice to determine whether the Freedom of Information Act requires disclosure of these record s.

2. A record from this system of records may be disclosed, as a routine use, in the course of presenting evidence to a court, magistrate, or administrative tribunal, including disclosures to opposing counsel in the course of settlement negotiations.

3. A record in this system of records may be disclosed, as a routine use, to a Member of Congress submitting a request involving an individual, to whom the record pertains, when the individual has requested assistance from the Member with respect to the subject matter of the record.

4. A record in this system of records may be disclosed, as a routine use, to a contractor of the Agency having need for the information in order to perform a contract. Recipients of information shall be required to comply with the requirements of the Privacy Act of 1974, as amended, pursuant to 5 U.S.C. 552a(m).

5. A record related to an International Application filed under the Patent Cooperation Treaty in this system of records may be disclosed, as a routine use, to the International Bureau of the World Intellectual Property Organization, pursuant to the Patent Cooperation Treaty.

6. A record in this system of records may be disclosed, as a routine use, to another federal agency for purposes of National Security review (35 U.S.C. 181) and for review pursuant to the Atomic Energy Act (42 U.S.C. 218(c)).

7. A record from this system of records may be disclosed, as a routine use, to the Administrator, General Services, or his/her designee, during an inspection of records conducted by GSA as part of that agency's responsibility to recommend improvements in records management practices and programs, under authority of 44 U.S.C. 2904 and 2906. Such disclosure shall be made in accordance with the GSA regulations governing inspection of records for this purpose, and any other relevant (i.e., GSA or Commerce) directive. Such disclosure shall not be used to make determinations about individuals.

8. A record from this system of records may be disclosed, as a routine use, to the public after either publication of the application pursuant to 35 U.S.C. 122(b) or issuance of a patent pursuant to 35 U.S.C. 151. Further, a record may be disclosed, subject to the limitations of 37 CFR 1.14, as a routine use, to the public if the record was filed in an application which became abandoned or in which the proceedings were terminated and which application is referenced by either a published application, an application open to public inspections or an issued patent.

9. A record from this system of records may be disclosed, as a routine use, to a Federal, State, or local law enforcement agency, if the USPTO becomes aware of a violation or potential violation of law or regulation.

UNITED STATES PATENT AND TRADEMARK OFFICE

Commissioner for Patents
United States Patent and Trademark Office
P.O. Box 1450
Alexandria, VA 22313-1450
www.uspto.gov

In re Patent No. 5491362
Issue Date: February 13,1996
Application No. 08106146
Filed: August 13,1993
Attorney Docket No. VTI1P057.FWC

:
:DECISION GRANTING PETITION
:UNDER 37 CFR 1.378(c)
:

This is a decision on the electronic petition, filed December 17,2008 ,under 37 CFR 1.378(c) to accept the unintentionally delayed payment of the 11.5 year maintenance fee for the above-identified patent.

The petition is **GRANTED**.

The maintenance fee is accepted, and the above-identified patent reinstated as of December 17,2008 . This decision also constitutes notice that the fee has been accepted. An electronic copy of the petition and this decision has been created as an entry in the Image File Wrapper. Nevertheless, petitioner should print and retain an independent copy.

Telephone inquiries related to this electronic decision should be directed to the Electronic Business Center at 1-866-217-9197.

UNITED STATES PATENT AND TRADEMARK OFFICE

Commissioner for Patents
United States Patent and Trademark Office
P.O. Box 1450
Alexandria, VA 22313-1450
www.uspto.gov
DIW Apr-07

Paper No. 15

GIFFORD, KRASS, SPRINKLE,ANDERSON & CITKOWSKI, P.C
PO BOX 7021
TROY MI 48007-7021

COPY MAILED

APR 17 2007

OFFICE OF PETITIONS

In re Patent No. 5,383,829	:	
Issued: 24 January, 1995	:	
Application No. 08/106,378	:	ON PETITION
Filed: 13 August, 1993	:	
For: STATIONARY EXERCISE DEVICE	:	

This is in response to the deficiency fee payment filed pursuant to 37 CFR 1.28(c) on 16 January, 2007.

37 CFR 1.28(c) states, "The deficiency is based on the amount of the fee, for other than a small entity, in effect at the time the deficiency is paid in full."

The Office no longer investigates or rejects original or reissue applications under 37 CFR 1.56. **1098 Off. Gaz. Pat. Office 502 (January 3, 1989).** Therefore, nothing in this Notice is intended to imply that an investigation was done.

Your fee deficiency submission under 37 CFR 1.28 is hereby **ACCEPTED.**

Small entity status will no longer apply.

Telephone inquiries should be directed to the undersigned at (571) 272-3231.

D Wood

Douglas I. Wood
Senior Petitions Attorney
Office of Petitions

UNITED STATES PATENT AND TRADEMARK OFFICE

Commissioner for Patents
United States Patent and Trademark Office
P. O. Box 1450
Alexandria, VA 22313-1450
www.uspto.gov

OLE K. NILSSEN
200 N HARRISON STREET
SUITE 103
ALGONQUIN, IL 60102

COPY MAILED

SEP 01 2006

OFFICE OF PETITIONS

In re Patent No. 5,426,349	:	
Issue Date: June 20, 1995	:	
Application No. 08/107,649	:	NOTICE
Filed: August 18, 1993	:	
Attorney Docket No.		

This is a notice regarding your request for acceptance of a fee deficiency submission under 37 CFR 1.28. On September 1, 1998, the Court of Appeals for the Federal Circuit held that 37 CFR 1.28(c) is the sole provision governing the time for correction of the erroneous payment of the issue fee as a small entity. **See DH Technology v. Synergystex International, Inc. 154 F.3d 1333, 47 USPQ2d 1865 (Fed. Cir. Sept. 1, 1998).**

The Office no longer investigates or rejects original or reissue applications under 37 CFR 1.56. **1098 Off. Gaz. Pat. Office 502 (January 3, 1989)**. Therefore, nothing in this Notice is intended to imply that an investigation was done.

Your fee deficiency submission under 37 CFR 1.28 is hereby **ACCEPTED**.

Inquiries related to this communication should be directed to Irvin Dingle at (571) 272-3210.

Irvin Dingle
Petitions Examiner
Office of Petitions

Under the Paperwork Reduction Act of 1995, no persons are required to respond to a collection of information unless it displays valid OMB control number.

PETITION TO ACCEPT UNINTENTIONALLY DELAYED PAYMENT OF MAINTENANCE FEE IN AN EXPIRED PATENT (37 CFR 1.378(c))

Patent Number	Issue Date (YYYY-MM-DD)	Application Number	Filing Date (YYYY-MM-DD)	Docket Number (if applicable)
5430486	1995-07-04	08107988	1993-08-17	

CAUTION: Maintenance fee (and surcharge, if any) payment must correctly identify: (1) the patent number and (2) the application number of the actual U.S. application leading to issuance of that patent to ensure the fee(s) is/are associated with the correct patent. 37 CFR 1.366(c) and (d).

SMALL ENTITY
☒ Patentee claims, or has previously claimed, small entity status. See 37 CFR 1.27.

LOSS OF ENTITLEMENT TO SMALL ENTITY STATUS
☐ Patentee is no longer entitled to small entity status. See 37 CFR 1.27(g)

NOT Small Entity			Small Entity		
	Fee	Code		Fee	Code
○	3 ½ year	(1551)	○	3 ½ year	(2551)
○	7 ½ year	(1552)	○	7 ½ year	(2552)
○	11 ½ year	(1553)	◉	11 ½ year	(2553)

SURCHARGE
The surcharge required by 37 CFR 1.20(i)(2) (Fee Code 1558) must be paid as a condition of accepting unintentionally delayed payment of the maintenance fee.

MAINTENANCE FEE (37 CFR 1.20(e)-(g))
The appropriate maintenance fee must be submitted with this petition.

STATEMENT
THE UNDERSIGNED CERTIFIES THAT THE DELAY IN PAYMENT OF THE MAINTENANCE FEE TO THIS PATENT WAS UNINTENTIONAL

PETITIONER(S) REQUEST THAT THE DELAYED PAYMENT OF THE MAINTENANCE FEE BE ACCEPTED AND THE PATENT REINSTATED

THIS PORTION MUST BE COMPLETED BY THE SIGNATORY OR SIGNATORIES

37 CFR 1.378(d) states: "Any petition under this section must be signed by an attorney or agent registered to practice before the Patent and Trademark Office, or by the patentee, the assignee, or other party in interest."

I certify, in accordance with 37 CFR 1.4(d)(4) that I am

○ An attorney or agent registered to practice before the Patent and Trademark Office

○ A sole patentee

○ A joint patentee; I certify that I am authorized to sign this submission on behalf of all the other patentees.

○ A joint patentee; all of whom are signing this e-petition

◉ The assignee of record of the entire interest

The Assignee of record of the entire interest			
Under 37 CFR 3.71 an assignee becomes of record by filing a statement in compliance with 37 CFR 3.73(b). Signature requirements are set forth in 37 CFR 1.4(d), and the undersigned certifies that he / she is empowered to act on behalf of the assignee of the entire interest			
Signature	/Robert P. Marcus/	Date (YYYY-MM-DD)	2007-08-04
Name	Robert P. Marcus		
Enter Reel and Frame Number		Remove	
Reel Number	000660	Frame Number	0413
Enter Reel and Frame Number		Remove	
Reel Number	008495	Frame Number	0985
Click ADD for additional Reel Number and Frame Number		Add	

This collection of information is required by 37 CFR 1.378(c). The information is required to obtain or retain a benefit by the public which is to file (and by the USPTO to process) an application. Confidentiality is governed by 35 U.S.C. 122 and 37 CFR 1.11 and 1.14. This collection is estimated to take 1 hour to complete, including gathering, preparing, and submitting the completed application form to the USPTO. Time will vary depending upon the individual case. Any comments on the amount of time you require to complete this form and/ or suggestions for reducing this burden, should be sent to the Chief Information Officer, U.S. Patent and Trademark Office, U.S. Department of Commerce, P.O. Box 1450, Alexandria, VA 22313-1450. DO NOT SEND FEES OR COMPLETED FORMS TO THIS ADDRESS. **This form can only be used when in conjunction with EFS-Web. If this form is mailed to the USPTO, it may cause delays in reinstating the patent.**

Privacy Act Statement

The Privacy Act of 1974 (P.L. 93-579) requires that you be given certain information in connection with your submission of the attached form related to a patent application or patent. Accordingly, pursuant to the requirements of the Act, please be advised that: (1) the general authority for the collection of this information is 35 U.S.C. 2(b)(2); (2) furnishing of the information solicited is voluntary; and (3) the principal purpose for which the information is used by the U.S. Patent and Trademark Office is to process and/or examine your submission related to a patent application or patent. If you do not furnish the requested information, the U.S. Patent and Trademark Office may not be able to process and/or examine your submission, which may result in termination of proceedings or abandonment of the application or expiration of the patent.

The information provided by you in this form will be subject to the following routine uses:

1. The information on this form will be treated confidentially to the extent allowed under the Freedom of Information Act (5 U.S.C. 552) and the Privacy Act (5 U.S.C. 552a). Records from this system of records may be disclosed to the Department of Justice to determine whether the Freedom of Information Act requires disclosure of these record s.

2. A record from this system of records may be disclosed, as a routine use, in the course of presenting evidence to a court, magistrate, or administrative tribunal, including disclosures to opposing counsel in the course of settlement negotiations.

3. A record in this system of records may be disclosed, as a routine use, to a Member of Congress submitting a request involving an individual, to whom the record pertains, when the individual has requested assistance from the Member with respect to the subject matter of the record.

4. A record in this system of records may be disclosed, as a routine use, to a contractor of the Agency having need for the information in order to perform a contract. Recipients of information shall be required to comply with the requirements of the Privacy Act of 1974, as amended, pursuant to 5 U.S.C. 552a(m).

5. A record related to an International Application filed under the Patent Cooperation Treaty in this system of records may be disclosed, as a routine use, to the International Bureau of the World Intellectual Property Organization, pursuant to the Patent Cooperation Treaty.

6. A record in this system of records may be disclosed, as a routine use, to another federal agency for purposes of National Security review (35 U.S.C. 181) and for review pursuant to the Atomic Energy Act (42 U.S.C. 218(c)).

7. A record from this system of records may be disclosed, as a routine use, to the Administrator, General Services, or his/her designee, during an inspection of records conducted by GSA as part of that agency's responsibility to recommend improvements in records management practices and programs, under authority of 44 U.S.C. 2904 and 2906. Such disclosure shall be made in accordance with the GSA regulations governing inspection of records for this purpose, and any other relevant (i.e., GSA or Commerce) directive. Such disclosure shall not be used to make determinations about individuals.

8. A record from this system of records may be disclosed, as a routine use, to the public after either publication of the application pursuant to 35 U.S.C. 122(b) or issuance of a patent pursuant to 35 U.S.C. 151. Further, a record may be disclosed, subject to the limitations of 37 CFR 1.14, as a routine use, to the public if the record was filed in an application which became abandoned or in which the proceedings were terminated and which application is referenced by either a published application, an application open to public inspections or an issued patent.

9. A record from this system of records may be disclosed, as a routine use, to a Federal, State, or local law enforcement agency, if the USPTO becomes aware of a violation or potential violation of law or regulation.

UNITED STATES PATENT AND TRADEMARK OFFICE

Commissioner for Patents
United States Patent and Trademark Office
P.O. Box 1450
Alexandria, VA 22313-1450
www.uspto.gov

In re Patent No. 5430486
Issue Date: July 4,1995
Application No. 08107988
Filed: August 17,1993
Attorney Docket No. RGB18763.001

:
:DECISION GRANTING PETITION
:UNDER 37 CFR 1.378(c)
:

This is a decision on the electronic petition, filed August 8,2007 ,under 37 CFR 1.378(c) to accept the unintentionally delayed payment of the 11.5 year maintenance fee for the above-identified patent.

The petition is GRANTED.

The maintenance fee is accepted, and the above-identified patent reinstated as of August 8,2007 . This decision also constitutes notice that the fee has been accepted. An electronic copy of the petition and this decision has been created as an entry in an Image File Wrapper. Nevertheless, petitioner should print and retain an independent copy

Telephone inquires related to this electronic decision should be directed to the Electronic Business Center at 1-866-217-9197.

Under the Paperwork Reduction Act of 1995, no persons are required to respond to a collection of information unless it displays valid OMB control number.

PETITION TO ACCEPT UNINTENTIONALLY DELAYED PAYMENT OF MAINTENANCE FEE IN AN EXPIRED PATENT (37 CFR 1.378(c))

Patent Number	Issue Date (YYYY-MM-DD)	Application Number	Filing Date (YYYY-MM-DD)	Docket Number (if applicable)
5355238	1994-10-11	08108338	1993-08-18	124256.01601

CAUTION: Maintenance fee (and surcharge, if any) payment must correctly identify: (1) the patent number and (2) the application number of the actual U.S. application leading to issuance of that patent to ensure the fee(s) is/are associated with the correct patent. 37 CFR 1.366(c) and (d).

SMALL ENTITY
☐ Patentee claims, or has previously claimed, small entity status. See 37 CFR 1.27.

LOSS OF ENTITLEMENT TO SMALL ENTITY STATUS
☐ Patentee is no longer entitled to small entity status. See 37 CFR 1.27(g)

NOT Small Entity		Small Entity	
Fee	Code	Fee	Code
○ 3 ½ year	(1551)	○ 3 ½ year	(2551)
○ 7 ½ year	(1552)	○ 7 ½ year	(2552)
◉ 11 ½ year	(1553)	○ 11 ½ year	(2553)

SURCHARGE
The surcharge required by 37 CFR 1.20(i)(2) (Fee Code 1558) must be paid as a condition of accepting unintentionally delayed payment of the maintenance fee.

MAINTENANCE FEE (37 CFR 1.20(e)-(g))
The appropriate maintenance fee must be submitted with this petition.

STATEMENT
THE UNDERSIGNED CERTIFIES THAT THE DELAY IN PAYMENT OF THE MAINTENANCE FEE TO THIS PATENT WAS UNINTENTIONAL

PETITIONER(S) REQUEST THAT THE DELAYED PAYMENT OF THE MAINTENANCE FEE BE ACCEPTED AND THE PATENT REINSTATED

THIS PORTION MUST BE COMPLETED BY THE SIGNATORY OR SIGNATORIES

37 CFR 1.378(d) states: "Any petition under this section must be signed by an attorney or agent registered to practice before the Patent and Trademark Office, or by the patentee, the assignee, or other party in interest."

I certify, in accordance with 37 CFR 1.4(d)(4) that I am

◉ An attorney or agent registered to practice before the Patent and Trademark Office

○ A sole patentee

○ A joint patentee; I certify that I am authorized to sign this submission on behalf of all the other patentees.

○ A joint patentee; all of whom are signing this e-petition

○ The assignee of record of the entire interest

Patent Practitioner			
A signature of the applicant or representative is required in accordance with 37 CFR 1.33 and 10.18. Please see 37 CFR 1.4(d) for the form of the signature			
Signature	/James M. Singer/	Date (YYYY-MM-DD)	2008-08-18
Name	James M. Singer	Registration Number	45111

This collection of information is required by 37 CFR 1.378(c). The information is required to obtain or retain a benefit by the public which is to file (and by the USPTO to process) an application. Confidentiality is governed by 35 U.S.C. 122 and 37 CFR 1.11 and 1.14. This collection is estimated to take 1 hour to complete, including gathering, preparing, and submitting the completed application form to the USPTO. Time will vary depending upon the individual case. Any comments on the amount of time you require to complete this form and/ or suggestions for reducing this burden, should be sent to the Chief Information Officer, U.S. Patent and Trademark Office, U.S. Department of Commerce, P.O. Box 1450, Alexandria, VA 22313-1450. DO NOT SEND FEES OR COMPLETED FORMS TO THIS ADDRESS. **This form can only be used when in conjunction with EFS-Web. If this form is mailed to the USPTO, it may cause delays in reinstating the patent.**

Privacy Act Statement

The Privacy Act of 1974 (P.L. 93-579) requires that you be given certain information in connection with your submission of the attached form related to a patent application or patent. Accordingly, pursuant to the requirements of the Act, please be advised that: (1) the general authority for the collection of this information is 35 U.S.C. 2(b)(2); (2) furnishing of the information solicited is voluntary; and (3) the principal purpose for which the information is used by the U.S. Patent and Trademark Office is to process and/or examine your submission related to a patent application or patent. If you do not furnish the requested information, the U.S. Patent and Trademark Office may not be able to process and/or examine your submission, which may result in termination of proceedings or abandonment of the application or expiration of the patent.

The information provided by you in this form will be subject to the following routine uses:

1. The information on this form will be treated confidentially to the extent allowed under the Freedom of Information Act (5 U.S.C. 552) and the Privacy Act (5 U.S.C. 552a). Records from this system of records may be disclosed to the Department of Justice to determine whether the Freedom of Information Act requires disclosure of these record s.

2. A record from this system of records may be disclosed, as a routine use, in the course of presenting evidence to a court, magistrate, or administrative tribunal, including disclosures to opposing counsel in the course of settlement negotiations.

3. A record in this system of records may be disclosed, as a routine use, to a Member of Congress submitting a request involving an individual, to whom the record pertains, when the individual has requested assistance from the Member with respect to the subject matter of the record.

4. A record in this system of records may be disclosed, as a routine use, to a contractor of the Agency having need for the information in order to perform a contract. Recipients of information shall be required to comply with the requirements of the Privacy Act of 1974, as amended, pursuant to 5 U.S.C. 552a(m).

5. A record related to an International Application filed under the Patent Cooperation Treaty in this system of records may be disclosed, as a routine use, to the International Bureau of the World Intellectual Property Organization, pursuant to the Patent Cooperation Treaty.

6. A record in this system of records may be disclosed, as a routine use, to another federal agency for purposes of National Security review (35 U.S.C. 181) and for review pursuant to the Atomic Energy Act (42 U.S.C. 218(c)).

7. A record from this system of records may be disclosed, as a routine use, to the Administrator, General Services, or his/her designee, during an inspection of records conducted by GSA as part of that agency's responsibility to recommend improvements in records management practices and programs, under authority of 44 U.S.C. 2904 and 2906. Such disclosure shall be made in accordance with the GSA regulations governing inspection of records for this purpose, and any other relevant (i.e., GSA or Commerce) directive. Such disclosure shall not be used to make determinations about individuals.

8. A record from this system of records may be disclosed, as a routine use, to the public after either publication of the application pursuant to 35 U.S.C. 122(b) or issuance of a patent pursuant to 35 U.S.C. 151. Further, a record may be disclosed, subject to the limitations of 37 CFR 1.14, as a routine use, to the public if the record was filed in an application which became abandoned or in which the proceedings were terminated and which application is referenced by either a published application, an application open to public inspections or an issued patent.

9. A record from this system of records may be disclosed, as a routine use, to a Federal, State, or local law enforcement agency, if the USPTO becomes aware of a violation or potential violation of law or regulation.

UNITED STATES PATENT AND TRADEMARK OFFICE

Commissioner for Patents
United States Patent and Trademark Office
P.O. Box 1450
Alexandria, VA 22313-1450
www.uspto.gov

In re Patent No. 5355238
Issue Date: October 11,1994
Application No. 08108338
Filed: August 18,1993
Attorney Docket No.

:

:DECISION GRANTING PETITION
:UNDER 37 CFR 1.378(c)

:

This is a decision on the electronic petition, filed August 18,2008 ,under 37 CFR 1.378(c) to accept the unintentionally delayed payment of the 11.5 year maintenance fee for the above-identified patent.

The petition is **GRANTED**.

The maintenance fee is accepted, and the above-identified patent reinstated as of August 18,2008 .
This decision also constitutes notice that the fee has been accepted. An electronic copy of the petition and this decision has been created as an entry in the Image File Wrapper. Nevertheless, petitioner should print and retain an independent copy.

Telephone inquiries related to this electronic decision should be directed to the Electronic Business Center at 1-866-217-9197.

Under the Paperwork Reduction Act of 1995, no persons are required to respond to a collection of information unless it displays valid OMB control number.

PETITION TO ACCEPT UNINTENTIONALLY DELAYED PAYMENT OF MAINTENANCE FEE IN AN EXPIRED PATENT (37 CFR 1.378(c))

Patent Number	Issue Date (YYYY-MM-DD)	Application Number	Filing Date (YYYY-MM-DD)	Docket Number (if applicable)
5525892	1996-06-11	08110991	1993-08-24	328542-1013

CAUTION: Maintenance fee (and surcharge, if any) payment must correctly identify: (1) the patent number and (2) the application number of the actual U.S. application leading to issuance of that patent to ensure the fee(s) is/are associated with the correct patent. 37 CFR 1.366(c) and (d).

SMALL ENTITY
☒ Patentee claims, or has previously claimed, small entity status. See 37 CFR 1.27.

LOSS OF ENTITLEMENT TO SMALL ENTITY STATUS
☐ Patentee is no longer entitled to small entity status. See 37 CFR 1.27(g)

NOT Small Entity			Small Entity		
	Fee	Code		Fee	Code
○	3 ½ year	(1551)	○	3 ½ year	(2551)
○	7 ½ year	(1552)	○	7 ½ year	(2552)
○	11 ½ year	(1553)	◉	11 ½ year	(2553)

SURCHARGE
The surcharge required by 37 CFR 1.20(i)(2) (Fee Code 1558) must be paid as a condition of accepting unintentionally delayed payment of the maintenance fee.

MAINTENANCE FEE (37 CFR 1.20(e)-(g))
The appropriate maintenance fee must be submitted with this petition.

STATEMENT
THE UNDERSIGNED CERTIFIES THAT THE DELAY IN PAYMENT OF THE MAINTENANCE FEE TO THIS PATENT WAS UNINTENTIONAL

PETITIONER(S) REQUEST THAT THE DELAYED PAYMENT OF THE MAINTENANCE FEE BE ACCEPTED AND THE PATENT REINSTATED

THIS PORTION MUST BE COMPLETED BY THE SIGNATORY OR SIGNATORIES

37 CFR 1.378(d) states: "Any petition under this section must be signed by an attorney or agent registered to practice before the Patent and Trademark Office, or by the patentee, the assignee, or other party in interest."

I certify, in accordance with 37 CFR 1.4(d)(4) that I am

◉ An attorney or agent registered to practice before the Patent and Trademark Office

○ A sole patentee

○ A joint patentee; I certify that I am authorized to sign this submission on behalf of all the other patentees.

○ A joint patentee; all of whom are signing this e-petition

○ The assignee of record of the entire interest

Patent Practitioner			
A signature of the applicant or representative is required in accordance with 37 CFR 1.33 and 10.18. Please see 37 CFR 1.4(d) for the form of the signature			
Signature	/Andre M. Szuwalski/	Date (YYYY-MM-DD)	2008-09-24
Name	Andre M. Szuwalski	Registration Number	35701

This collection of information is required by 37 CFR 1.378(c). The information is required to obtain or retain a benefit by the public which is to file (and by the USPTO to process) an application. Confidentiality is governed by 35 U.S.C. 122 and 37 CFR 1.11 and 1.14. This collection is estimated to take 1 hour to complete, including gathering, preparing, and submitting the completed application form to the USPTO. Time will vary depending upon the individual case. Any comments on the amount of time you require to complete this form and/ or suggestions for reducing this burden, should be sent to the Chief Information Officer, U.S. Patent and Trademark Office, U.S. Department of Commerce, P.O. Box 1450, Alexandria, VA 22313-1450. DO NOT SEND FEES OR COMPLETED FORMS TO THIS ADDRESS. **This form can only be used when in conjunction with EFS-Web. If this form is mailed to the USPTO, it may cause delays in reinstating the patent.**

Privacy Act Statement

The Privacy Act of 1974 (P.L. 93-579) requires that you be given certain information in connection with your submission of the attached form related to a patent application or patent. Accordingly, pursuant to the requirements of the Act, please be advised that: (1) the general authority for the collection of this information is 35 U.S.C. 2(b)(2); (2) furnishing of the information solicited is voluntary; and (3) the principal purpose for which the information is used by the U.S. Patent and Trademark Office is to process and/or examine your submission related to a patent application or patent. If you do not furnish the requested information, the U.S. Patent and Trademark Office may not be able to process and/or examine your submission, which may result in termination of proceedings or abandonment of the application or expiration of the patent.

The information provided by you in this form will be subject to the following routine uses:

1. The information on this form will be treated confidentially to the extent allowed under the Freedom of Information Act (5 U.S.C. 552) and the Privacy Act (5 U.S.C. 552a). Records from this system of records may be disclosed to the Department of Justice to determine whether the Freedom of Information Act requires disclosure of these record s.

2. A record from this system of records may be disclosed, as a routine use, in the course of presenting evidence to a court, magistrate, or administrative tribunal, including disclosures to opposing counsel in the course of settlement negotiations.

3. A record in this system of records may be disclosed, as a routine use, to a Member of Congress submitting a request involving an individual, to whom the record pertains, when the individual has requested assistance from the Member with respect to the subject matter of the record.

4. A record in this system of records may be disclosed, as a routine use, to a contractor of the Agency having need for the information in order to perform a contract. Recipients of information shall be required to comply with the requirements of the Privacy Act of 1974, as amended, pursuant to 5 U.S.C. 552a(m).

5. A record related to an International Application filed under the Patent Cooperation Treaty in this system of records may be disclosed, as a routine use, to the International Bureau of the World Intellectual Property Organization, pursuant to the Patent Cooperation Treaty.

6. A record in this system of records may be disclosed, as a routine use, to another federal agency for purposes of National Security review (35 U.S.C. 181) and for review pursuant to the Atomic Energy Act (42 U.S.C. 218(c)).

7. A record from this system of records may be disclosed, as a routine use, to the Administrator, General Services, or his/her designee, during an inspection of records conducted by GSA as part of that agency's responsibility to recommend improvements in records management practices and programs, under authority of 44 U.S.C. 2904 and 2906. Such disclosure shall be made in accordance with the GSA regulations governing inspection of records for this purpose, and any other relevant (i.e., GSA or Commerce) directive. Such disclosure shall not be used to make determinations about individuals.

8. A record from this system of records may be disclosed, as a routine use, to the public after either publication of the application pursuant to 35 U.S.C. 122(b) or issuance of a patent pursuant to 35 U.S.C. 151. Further, a record may be disclosed, subject to the limitations of 37 CFR 1.14, as a routine use, to the public if the record was filed in an application which became abandoned or in which the proceedings were terminated and which application is referenced by either a published application, an application open to public inspections or an issued patent.

9. A record from this system of records may be disclosed, as a routine use, to a Federal, State, or local law enforcement agency, if the USPTO becomes aware of a violation or potential violation of law or regulation.

UNITED STATES PATENT AND TRADEMARK OFFICE

Commissioner for Patents
United States Patent and Trademark Office
P.O. Box 1450
Alexandria, VA 22313-1450
www.uspto.gov

In re Patent No. 5525892
Issue Date: June 11,1996
Application No. 08110991
Filed: August 24,1993
Attorney Docket No. 67165131

:
:DECISION GRANTING PETITION
:UNDER 37 CFR 1.378(c)
:

This is a decision on the electronic petition, filed September 24,2008 ,under 37 CFR 1.378(c) to accept the unintentionally delayed payment of the 11.5 year maintenance fee for the above-identified patent.

The petition is **GRANTED**.

The maintenance fee is accepted, and the above-identified patent reinstated as of September 24,2008 . This decision also constitutes notice that the fee has been accepted. An electronic copy of the petition and this decision has been created as an entry in the Image File Wrapper. Nevertheless, petitioner should print and retain an independent copy.

Telephone inquiries related to this electronic decision should be directed to the Electronic Business Center at 1-866-217-9197.

SPE RESPONSE FOR CERTIFICATE OF CORRECTION

Paper No.: _____

DATE : 9/8/09

TO SPE OF : ART UNIT 1600 Nguyen Dave

SUBJECT : Request for Certificate of Correction for Appl. No.: 08/113320 Patent No.: 5532372

Please respond to this request for a certificate of correction within 7 days.

FOR IFW FILES:

Please review the requested changes/corrections as shown in the **COCIN** document(s) in the IFW application image. No new matter should be introduced, nor should the scope or meaning of the claims be changed.

Please complete the response (see below) and forward the completed response to scanning using document code **COCX**.

FOR PAPER FILES:

Please review the requested changes/corrections as shown in the attached certificate of correction. Please complete this form (see below) and forward it with the file to:

Certificates of Correction Branch (CofC)
South Tower - 9A22
Palm Location 7580

Certificates of Correction Branch
703-308-9390 ext. _____

Thank You For Your Assistance

The request for issuing the above-identified correction(s) is hereby:
Note your decision on the appropriate box.

- ☒ **Approved** — **All** changes apply.
- ☐ **Approved in Part** — Specify below which changes **do not** apply.
- ☐ **Denied** — State the reasons for denial below.

Comments:

Corrections address the renumbering of the claims at Allowance. No changes to claim breadth are made by the changes.

JOSEPH WOITACH, PH.D.
SUPERVISORY PATENT EXAMINER
TECHNOLOGY CENTER 1600

SPE **Art Unit** 1633

(REV. 7/03) U.S. DEPARTMENT OF COMMERCE Patent and Trademark Office

Under the Paperwork Reduction Act of 1995, no persons are required to respond to a collection of information unless it displays valid OMB control number.

PETITION TO ACCEPT UNINTENTIONALLY DELAYED PAYMENT OF MAINTENANCE FEE IN AN EXPIRED PATENT (37 CFR 1.378(c))

Patent Number	Issue Date (YYYY-MM-DD)	Application Number	Filing Date (YYYY-MM-DD)	Docket Number (if applicable)
5463913	1995-11-07	08/114,892	1993-08-31	5541

CAUTION: Maintenance fee (and surcharge, if any) payment must correctly identify: (1) the patent number and (2) the application number of the actual U.S. application leading to issuance of that patent to ensure the fee(s) is/are associated with the correct patent. 37 CFR 1.366(c) and (d).

SMALL ENTITY
☐ Patentee claims, or has previously claimed, small entity status. See 37 CFR 1.27.

LOSS OF ENTITLEMENT TO SMALL ENTITY STATUS
☐ Patentee is no longer entitled to small entity status. See 37 CFR 1.27(g)

NOT Small Entity			Small Entity		
	Fee	Code		Fee	Code
○	3 ½ year	(1551)	○	3 ½ year	(2551)
○	7 ½ year	(1552)	○	7 ½ year	(2552)
◉	11 ½ year	(1553)	○	11 ½ year	(2553)

SURCHARGE
The surcharge required by 37 CFR 1.20(i)(2) (Fee Code 1558) must be paid as a condition of accepting unintentionally delayed payment of the maintenance fee.

MAINTENANCE FEE (37 CFR 1.20(e)-(g))
The appropriate maintenance fee must be submitted with this petition.

STATEMENT
THE UNDERSIGNED CERTIFIES THAT THE DELAY IN PAYMENT OF THE MAINTENANCE FEE TO THIS PATENT WAS UNINTENTIONAL

PETITIONER(S) REQUEST THAT THE DELAYED PAYMENT OF THE MAINTENANCE FEE BE ACCEPTED AND THE PATENT REINSTATED

THIS PORTION MUST BE COMPLETED BY THE SIGNATORY OR SIGNATORIES

37 CFR 1.378(d) states: "Any petition under this section must be signed by an attorney or agent registered to practice before the Patent and Trademark Office, or by the patentee, the assignee, or other party in interest."

I certify, in accordance with 37 CFR 1.4(d)(4) that I am

◉ An attorney or agent registered to practice before the Patent and Trademark Office

○ A sole patentee

○ A joint patentee; I certify that I am authorized to sign this submission on behalf of all the other patentees.

○ A joint patentee; all of whom are signing this e-petition

○ The assignee of record of the entire interest

Patent Practitioner			
A signature of the applicant or representative is required in accordance with 37 CFR 1.33 and 10.18. Please see 37 CFR 1.4(d) for the form of the signature			
Signature	/Adam A Bennett/	Date (YYYY-MM-DD)	2008-08-18
Name	Adam A Bennett	Registration Number	57489

This collection of information is required by 37 CFR 1.378(c). The information is required to obtain or retain a benefit by the public which is to file (and by the USPTO to process) an application. Confidentiality is governed by 35 U.S.C. 122 and 37 CFR 1.11 and 1.14. This collection is estimated to take 1 hour to complete, including gathering, preparing, and submitting the completed application form to the USPTO. Time will vary depending upon the individual case. Any comments on the amount of time you require to complete this form and/ or suggestions for reducing this burden, should be sent to the Chief Information Officer, U.S. Patent and Trademark Office, U.S. Department of Commerce, P.O. Box 1450, Alexandria, VA 22313-1450. DO NOT SEND FEES OR COMPLETED FORMS TO THIS ADDRESS. **This form can only be used when in conjunction with EFS-Web. If this form is mailed to the USPTO, it may cause delays in reinstating the patent.**

Privacy Act Statement

The Privacy Act of 1974 (P.L. 93-579) requires that you be given certain information in connection with your submission of the attached form related to a patent application or patent. Accordingly, pursuant to the requirements of the Act, please be advised that: (1) the general authority for the collection of this information is 35 U.S.C. 2(b)(2); (2) furnishing of the information solicited is voluntary; and (3) the principal purpose for which the information is used by the U.S. Patent and Trademark Office is to process and/or examine your submission related to a patent application or patent. If you do not furnish the requested information, the U.S. Patent and Trademark Office may not be able to process and/or examine your submission, which may result in termination of proceedings or abandonment of the application or expiration of the patent.

The information provided by you in this form will be subject to the following routine uses:

1. The information on this form will be treated confidentially to the extent allowed under the Freedom of Information Act (5 U.S.C. 552) and the Privacy Act (5 U.S.C. 552a). Records from this system of records may be disclosed to the Department of Justice to determine whether the Freedom of Information Act requires disclosure of these record s.

2. A record from this system of records may be disclosed, as a routine use, in the course of presenting evidence to a court, magistrate, or administrative tribunal, including disclosures to opposing counsel in the course of settlement negotiations.

3. A record in this system of records may be disclosed, as a routine use, to a Member of Congress submitting a request involving an individual, to whom the record pertains, when the individual has requested assistance from the Member with respect to the subject matter of the record.

4. A record in this system of records may be disclosed, as a routine use, to a contractor of the Agency having need for the information in order to perform a contract. Recipients of information shall be required to comply with the requirements of the Privacy Act of 1974, as amended, pursuant to 5 U.S.C. 552a(m).

5. A record related to an International Application filed under the Patent Cooperation Treaty in this system of records may be disclosed, as a routine use, to the International Bureau of the World Intellectual Property Organization, pursuant to the Patent Cooperation Treaty.

6. A record in this system of records may be disclosed, as a routine use, to another federal agency for purposes of National Security review (35 U.S.C. 181) and for review pursuant to the Atomic Energy Act (42 U.S.C. 218(c)).

7. A record from this system of records may be disclosed, as a routine use, to the Administrator, General Services, or his/her designee, during an inspection of records conducted by GSA as part of that agency's responsibility to recommend improvements in records management practices and programs, under authority of 44 U.S.C. 2904 and 2906. Such disclosure shall be made in accordance with the GSA regulations governing inspection of records for this purpose, and any other relevant (i.e., GSA or Commerce) directive. Such disclosure shall not be used to make determinations about individuals.

8. A record from this system of records may be disclosed, as a routine use, to the public after either publication of the application pursuant to 35 U.S.C. 122(b) or issuance of a patent pursuant to 35 U.S.C. 151. Further, a record may be disclosed, subject to the limitations of 37 CFR 1.14, as a routine use, to the public if the record was filed in an application which became abandoned or in which the proceedings were terminated and which application is referenced by either a published application, an application open to public inspections or an issued patent.

9. A record from this system of records may be disclosed, as a routine use, to a Federal, State, or local law enforcement agency, if the USPTO becomes aware of a violation or potential violation of law or regulation.

UNITED STATES PATENT AND TRADEMARK OFFICE

Commissioner for Patents
United States Patent and Trademark Office
P.O. Box 1450
Alexandria, VA 22313-1450
www.uspto.gov

In re Patent No. 5463913
Issue Date: November 7,1995
Application No. 08114892
Filed: August 31,1993
Attorney Docket No. 5541

:
:DECISION GRANTING PETITION
:UNDER 37 CFR 1.378(c)
:

This is a decision on the electronic petition, filed August 18,2008 ,under 37 CFR 1.378(c) to accept the unintentionally delayed payment of the 11.5 year maintenance fee for the above-identified patent.

The petition is **GRANTED**.

The maintenance fee is accepted, and the above-identified patent reinstated as of August 18,2008 .
This decision also constitutes notice that the fee has been accepted. An electronic copy of the petition and this decision has been created as an entry in the Image File Wrapper. Nevertheless, petitioner should print and retain an independent copy.

Telephone inquiries related to this electronic decision should be directed to the Electronic Business Center at 1-866-217-9197.

UNITED STATES PATENT AND TRADEMARK OFFICE

COMMISSIONER FOR PATENTS
UNITED STATES PATENT AND TRADEMARK OFFICE
P.O. BOX 1450
ALEXANDRIA, VA 22313-1450
www.uspto.gov

OIPE IAP76
DEC 0 3 2007
PATENT & TRADEMARK OFFICE

Paper No. 19

Gad Aharoni
10 Nevatim Street
Petach Tikva, Israel 49561

COPY MAILED
SEP 1 4 2007
OFFICE OF PETITIONS

In re Patent No. 5,406,624	:	
Issue Date: April 11, 1995	:	
Application No. 08/115,067	:	ON PETITION
Filed: September 2, 1993	:	
Attorney Docket No. 8589	:	

This is a decision on the petition under 37 CFR 1.378(c), filed July 26, 2007, to accept the delayed payment of a maintenance fee for the above-identified patent.

The petition is **DISMISSED**.

If reconsideration of this decision is desired, a petition for reconsideration under 37 CFR 1.378(e) must be filed within TWO (2) MONTHS from the mail date of this decision. No extension of this two-month time limit can be granted under 37 CFR 1.136(a) or (b). This is **not** a final agency action within the meaning of 5 U.S.C. § 704.

Any petition for reconsideration of this decision must be accompanied by the petition fee of $400 as set forth in 37 CFR 1.17(f). The petition for reconsideration must include the lacking item(s) noted above, since, after a decision on the petition for reconsideration, no further reconsideration or review of the matter will be undertaken by the Commissioner.

It is noted that the petition is not signed by all the applicants or owners of this application. 37 CFR 1.33(b) states that:

Amendments and other papers filed in the application must be signed by:

(1) An attorney or agent of record appointed in compliance with § 1.34(b);
(2) A registered attorney or agent not of record who acts in a representative capacity under the provision of § 1.34(a);
(3) The assignee of record of the entire interest, if there is an assignee of record of the entire interest;

(4) An assignee of record of an undivided part interest, and any assignee(s) of the remaining interest and any applicant retaining an interest, if there is an assignee of record of an undivided part interest; or (5) **All of the applicants (§§ 1.42, 1.43 and 1.47) for patent, unless there is an assignee of record of the entire interest and such assignee has taken action in the application in accordance with §§ 3.71 and 3.73.**

If the petition is filed by or on behalf of the assignee, the petition must also comply with 37 CFR 3.73(b). 37 CFR 3.73(b) provides that: (1) when an assignee seeks to take action in a matter before the Office, the assignee must establish its ownership of the property to the satisfaction of the Commissioner; (2) ownership is established by submitting to the Office, in the Office file related to the matter in which action is sought to be taken, documentary evidence of a chain of title from the original owner to the assignee (*e.g.*, copy of an executed assignment submitted for recording) or by specifying (*e.g.*, reel and frame number) where such evidence is recorded in the Office; (3) the submission establishing ownership must be signed by a party authorized to act on behalf of the assignee; and (4) documents submitted to establish ownership may be required to be recorded as a condition to permitting the assignee to take action in a matter pending before the Office. A 37 CFR 3.73(b) statement is enclosed with this requirement for information.

Further correspondence with respect to this matter should be addressed as follows:

By Mail: Mail Stop PETITION
Commissioner for Patents
Post Office Box 1450
Alexandria, VA 22313-1450

By hand: U. S. Patent and Trademark Office
Customer Service Window, Mail Stop Petitions
Randolph Building
401 Dulany Street
Alexandria, VA 22314

The centralized facsimile number is **(571) 273-8300.**

Telephone inquiries should be directed to the undersigned at (571)272-3213.

Cheryl Gibson-Baylor

Cheryl Gibson-Baylor
Petitions Examin
Office of Petitions

OIPE IAP76
DEC 0 3 2007
PATENT & TRADEMARK OFFICE

PTO/SB/96 (04-07)
Approved for use through 09/30/2007. OMB 0651-0031
U.S. Patent and Trademark Office; U.S. DEPARTMENT OF COMMERCE
Under the Paperwork Reduction Act of 1995, no persons are required to respond to a collection of information unless it displays a valid OMB control number.

STATEMENT UNDER 37 CFR 3.73(b)

Applicant/Patent Owner: _____

Application No./Patent No.: _____ Filed/Issue Date: _____

Entitled:

_____, a _____
(Name of Assignee) (Type of Assignee, e.g., corporation, partnership, university, government agency, etc.)

states that it is:

1. ☐ the assignee of the entire right, title, and interest; or

2. ☐ an assignee of less than the entire right, title and interest
(The extent (by percentage) of its ownership interest is _____%)

in the patent application/patent identified above by virtue of either:

A. ☐ An assignment from the inventor(s) of the patent application/patent identified above. The assignment was recorded in the United States Patent and Trademark Office at Reel _____, Frame _____, or for which a copy thereof is attached.

OR

B. ☐ A chain of title from the inventor(s), of the patent application/patent identified above, to the current assignee as follows:

1. From: _____ To: _____
The document was recorded in the United States Patent and Trademark Office at
Reel _____, Frame _____, or for which a copy thereof is attached.

2. From: _____ To: _____
The document was recorded in the United States Patent and Trademark Office at
Reel _____, Frame _____, or for which a copy thereof is attached.

3. From: _____ To: _____
The document was recorded in the United States Patent and Trademark Office at
Reel _____, Frame _____, or for which a copy thereof is attached.

☐ Additional documents in the chain of title are listed on a supplemental sheet.

☐ As required by 37 CFR 3.73(b)(1)(i), the documentary evidence of the chain of title from the original owner to the assignee was, or concurrently is being, submitted for recordation pursuant to 37 CFR 3.11.

[NOTE: A separate copy (*i.e.*, a true copy of the original assignment document(s)) must be submitted to Assignment Division in accordance with 37 CFR Part 3, to record the assignment in the records of the USPTO. See MPEP 302.08]

The undersigned (whose title is supplied below) is authorized to act on behalf of the assignee.

_____	_____
Signature	Date
_____	_____
Printed or Typed Name	Telephone Number
_____	
Title	

This collection of information is required by 37 CFR 3.73(b). The information is required to obtain or retain a benefit by the public which is to file (and by the USPTO to process) an application. Confidentiality is governed by 35 U.S.C. 122 and 37 CFR 1.11 and 1.14. This collection is estimated to take 12 minutes to complete, including gathering, preparing, and submitting the completed application form to the USPTO. Time will vary depending upon the individual case. Any comments on the amount of time you require to complete this form and/or suggestions for reducing this burden, should be sent to the Chief Information Officer, U.S. Patent and Trademark Office, U.S. Department of Commerce, P.O. Box 1450, Alexandria, VA 22313-1450. DO NOT SEND FEES OR COMPLETED FORMS TO THIS ADDRESS. SEND TO: **Commissioner for Patents, P.O. Box 1450, Alexandria, VA 22313-1450.**

If you need assistance in completing the form, call 1-800-PTO-9199 and select option 2.

OIPE IAP78
DEC 0 3 2007
PATENT & TRADEMARK OFFICE

Privacy Act Statement

The **Privacy Act of 1974 (P.L. 93-579)** requires that you be given certain information in connection with your submission of the attached form related to a patent application or patent. Accordingly, pursuant to the requirements of the Act, please be advised that: (1) the general authority for the collection of this information is 35 U.S.C. 2(b)(2); (2) furnishing of the information solicited is voluntary; and (3) the principal purpose for which the information is used by the U.S. Patent and Trademark Office is to process and/or examine your submission related to a patent application or patent. If you do not furnish the requested information, the U.S. Patent and Trademark Office may not be able to process and/or examine your submission, which may result in termination of proceedings or abandonment of the application or expiration of the patent.

The information provided by you in this form will be subject to the following routine uses:

1. The information on this form will be treated confidentially to the extent allowed under the Freedom of Information Act (5 U.S.C. 552) and the Privacy Act (5 U.S.C 552a). Records from this system of records may be disclosed to the Department of Justice to determine whether disclosure of these records is required by the Freedom of Information Act.
2. A record from this system of records may be disclosed, as a routine use, in the course of presenting evidence to a court, magistrate, or administrative tribunal, including disclosures to opposing counsel in the course of settlement negotiations.
3. A record in this system of records may be disclosed, as a routine use, to a Member of Congress submitting a request involving an individual, to whom the record pertains, when the individual has requested assistance from the Member with respect to the subject matter of the record.
4. A record in this system of records may be disclosed, as a routine use, to a contractor of the Agency having need for the information in order to perform a contract. Recipients of information shall be required to comply with the requirements of the Privacy Act of 1974, as amended, pursuant to 5 U.S.C. 552a(m).
5. A record related to an International Application filed under the Patent Cooperation Treaty in this system of records may be disclosed, as a routine use, to the International Bureau of the World Intellectual Property Organization, pursuant to the Patent Cooperation Treaty.
6. A record in this system of records may be disclosed, as a routine use, to another federal agency for purposes of National Security review (35 U.S.C. 181) and for review pursuant to the Atomic Energy Act (42 U.S.C. 218(c)).
7. A record from this system of records may be disclosed, as a routine use, to the Administrator, General Services, or his/her designee, during an inspection of records conducted by GSA as part of that agency's responsibility to recommend improvements in records management practices and programs, under authority of 44 U.S.C. 2904 and 2906. Such disclosure shall be made in accordance with the GSA regulations governing inspection of records for this purpose, and any other relevant (*i.e.*, GSA or Commerce) directive. Such disclosure shall not be used to make determinations about individuals.
8. A record from this system of records may be disclosed, as a routine use, to the public after either publication of the application pursuant to 35 U.S.C. 122(b) or issuance of a patent pursuant to 35 U.S.C. 151. Further, a record may be disclosed, subject to the limitations of 37 CFR 1.14, as a routine use, to the public if the record was filed in an application which became abandoned or in which the proceedings were terminated and which application is referenced by either a published application, an application open to public inspection or an issued patent.
9. A record from this system of records may be disclosed, as a routine use, to a Federal, State, or local law enforcement agency, if the USPTO becomes aware of a violation or potential violation of law or regulation.

Under the Paperwork Reduction Act of 1995, no persons are required to respond to a collection of information unless it displays valid OMB control number.

PETITION TO ACCEPT UNINTENTIONALLY DELAYED PAYMENT OF MAINTENANCE FEE IN AN EXPIRED PATENT (37 CFR 1.378(c))

Patent Number	Issue Date (YYYY-MM-DD)	Application Number	Filing Date (YYYY-MM-DD)	Docket Number (if applicable)
5479285	1995-12-26	08/115,295	1993-09-01	5819

CAUTION: Maintenance fee (and surcharge, if any) payment must correctly identify: (1) the patent number and (2) the application number of the actual U.S. application leading to issuance of that patent to ensure the fee(s) is/are associated with the correct patent. 37 CFR 1.366(c) and (d).

SMALL ENTITY
☐ Patentee claims, or has previously claimed, small entity status. See 37 CFR 1.27.

LOSS OF ENTITLEMENT TO SMALL ENTITY STATUS
☐ Patentee is no longer entitled to small entity status. See 37 CFR 1.27(g)

NOT Small Entity		Small Entity	
Fee	Code	Fee	Code
○ 3 ½ year	(1551)	○ 3 ½ year	(2551)
○ 7 ½ year	(1552)	○ 7 ½ year	(2552)
◉ 11 ½ year	(1553)	○ 11 ½ year	(2553)

SURCHARGE
The surcharge required by 37 CFR 1.20(i)(2) (Fee Code 1558) must be paid as a condition of accepting unintentionally delayed payment of the maintenance fee.

MAINTENANCE FEE (37 CFR 1.20(e)-(g))
The appropriate maintenance fee must be submitted with this petition.

STATEMENT
THE UNDERSIGNED CERTIFIES THAT THE DELAY IN PAYMENT OF THE MAINTENANCE FEE TO THIS PATENT WAS UNINTENTIONAL

PETITIONER(S) REQUEST THAT THE DELAYED PAYMENT OF THE MAINTENANCE FEE BE ACCEPTED AND THE PATENT REINSTATED

THIS PORTION MUST BE COMPLETED BY THE SIGNATORY OR SIGNATORIES

37 CFR 1.378(d) states: "Any petition under this section must be signed by an attorney or agent registered to practice before the Patent and Trademark Office, or by the patentee, the assignee, or other party in interest."

I certify, in accordance with 37 CFR 1.4(d)(4) that I am

◉ An attorney or agent registered to practice before the Patent and Trademark Office

○ A sole patentee

○ A joint patentee; I certify that I am authorized to sign this submission on behalf of all the other patentees.

○ A joint patentee; all of whom are signing this e-petition

○ The assignee of record of the entire interest

Patent Practitioner			
A signature of the applicant or representative is required in accordance with 37 CFR 1.33 and 10.18. Please see 37 CFR 1.4(d) for the form of the signature			
Signature	/AdamABennett/	Date (YYYY-MM-DD)	2008-12-15
Name	Adam A. Bennett	Registration Number	57849

This collection of information is required by 37 CFR 1.378(c). The information is required to obtain or retain a benefit by the public which is to file (and by the USPTO to process) an application. Confidentiality is governed by 35 U.S.C. 122 and 37 CFR 1.11 and 1.14. This collection is estimated to take 1 hour to complete, including gathering, preparing, and submitting the completed application form to the USPTO. Time will vary depending upon the individual case. Any comments on the amount of time you require to complete this form and/ or suggestions for reducing this burden, should be sent to the Chief Information Officer, U.S. Patent and Trademark Office, U.S. Department of Commerce, P.O. Box 1450, Alexandria, VA 22313-1450. DO NOT SEND FEES OR COMPLETED FORMS TO THIS ADDRESS. **This form can only be used when in conjunction with EFS-Web. If this form is mailed to the USPTO, it may cause delays in reinstating the patent.**

Privacy Act Statement

The Privacy Act of 1974 (P.L. 93-579) requires that you be given certain information in connection with your submission of the attached form related to a patent application or patent. Accordingly, pursuant to the requirements of the Act, please be advised that: (1) the general authority for the collection of this information is 35 U.S.C. 2(b)(2); (2) furnishing of the information solicited is voluntary; and (3) the principal purpose for which the information is used by the U.S. Patent and Trademark Office is to process and/or examine your submission related to a patent application or patent. If you do not furnish the requested information, the U.S. Patent and Trademark Office may not be able to process and/or examine your submission, which may result in termination of proceedings or abandonment of the application or expiration of the patent.

The information provided by you in this form will be subject to the following routine uses:

1. The information on this form will be treated confidentially to the extent allowed under the Freedom of Information Act (5 U.S.C. 552) and the Privacy Act (5 U.S.C. 552a). Records from this system of records may be disclosed to the Department of Justice to determine whether the Freedom of Information Act requires disclosure of these record s.

2. A record from this system of records may be disclosed, as a routine use, in the course of presenting evidence to a court, magistrate, or administrative tribunal, including disclosures to opposing counsel in the course of settlement negotiations.

3. A record in this system of records may be disclosed, as a routine use, to a Member of Congress submitting a request involving an individual, to whom the record pertains, when the individual has requested assistance from the Member with respect to the subject matter of the record.

4. A record in this system of records may be disclosed, as a routine use, to a contractor of the Agency having need for the information in order to perform a contract. Recipients of information shall be required to comply with the requirements of the Privacy Act of 1974, as amended, pursuant to 5 U.S.C. 552a(m).

5. A record related to an International Application filed under the Patent Cooperation Treaty in this system of records may be disclosed, as a routine use, to the International Bureau of the World Intellectual Property Organization, pursuant to the Patent Cooperation Treaty.

6. A record in this system of records may be disclosed, as a routine use, to another federal agency for purposes of National Security review (35 U.S.C. 181) and for review pursuant to the Atomic Energy Act (42 U.S.C. 218(c)).

7. A record from this system of records may be disclosed, as a routine use, to the Administrator, General Services, or his/her designee, during an inspection of records conducted by GSA as part of that agency's responsibility to recommend improvements in records management practices and programs, under authority of 44 U.S.C. 2904 and 2906. Such disclosure shall be made in accordance with the GSA regulations governing inspection of records for this purpose, and any other relevant (i.e., GSA or Commerce) directive. Such disclosure shall not be used to make determinations about individuals.

8. A record from this system of records may be disclosed, as a routine use, to the public after either publication of the application pursuant to 35 U.S.C. 122(b) or issuance of a patent pursuant to 35 U.S.C. 151. Further, a record may be disclosed, subject to the limitations of 37 CFR 1.14, as a routine use, to the public if the record was filed in an application which became abandoned or in which the proceedings were terminated and which application is referenced by either a published application, an application open to public inspections or an issued patent.

9. A record from this system of records may be disclosed, as a routine use, to a Federal, State, or local law enforcement agency, if the USPTO becomes aware of a violation or potential violation of law or regulation.

UNITED STATES PATENT AND TRADEMARK OFFICE

Commissioner for Patents
United States Patent and Trademark Office
P.O. Box 1450
Alexandria, VA 22313-1450
www.uspto.gov

In re Patent No. 5479285
Issue Date: December 26,1995
Application No. 08115295
Filed: September 1,1993
Attorney Docket No. 252016-9014

:
:DECISION GRANTING PETITION
:UNDER 37 CFR 1.378(c)
:

This is a decision on the electronic petition, filed December 15,2008 ,under 37 CFR 1.378(c) to accept the unintentionally delayed payment of the 11.5 year maintenance fee for the above-identified patent.

The petition is **GRANTED**.

The maintenance fee is accepted, and the above-identified patent reinstated as of December 15,2008 . This decision also constitutes notice that the fee has been accepted. An electronic copy of the petition and this decision has been created as an entry in the Image File Wrapper. Nevertheless, petitioner should print and retain an independent copy.

Telephone inquiries related to this electronic decision should be directed to the Electronic Business Center at 1-866-217-9197.

UNITED STATES PATENT AND TRADEMARK OFFICE

COMMISSIONER FOR PATENTS
UNITED STATES PATENT AND TRADEMARK OFFICE
P.O. BOX 1450
ALEXANDRIA, VA 22313-1450
www.uspto.gov

Ole K. Nilssen
200 N Harrison Street
Suite 103
Algonquin, IL 60102

COPY MAILED
AUG 29 2006
OFFICE OF PETITIONS

In re Patent No. 5,440,209 :
Issue Date: August 8, 1995 :
Application No. 08/115,586 : NOTICE
Filed: September 3, 1993 :
Patentee(s): Ole K. Nilssen :

This is a notice regarding your request for acceptance of a fee deficiency submission under 37 CFR 1.28, filed June 26, 2006. On September 1, 1998, the Court of Appeals for the Federal Circuit held that 37 CFR 1.28(c) is the sole provision governing the time for correction of the erroneous payment of the issue fee as a small entity. **See DH Technology v. Synergystex International, Inc. 154 F.3d 1333, 47 USPQ2d 1865 (Fed. Cir. Sept. 1, 1998).**

The Office no longer investigates or rejects original or reissue applications under 37 CFR 1.56. **1098 Off. Gaz. Pat. Office 502 (January 3, 1989).** Therefore, nothing in this Notice is intended to imply that an investigation was done.

Your fee deficiency submission under 37 CFR 1.28 is hereby **ACCEPTED**.

This patent is no longer entitled to small entity status. Accordingly, all future fees paid must be paid at the large entity rate.

Inquiries related to this communication should be directed to the undersigned at (571) 272-3226.

Andrea Smith
Petitions Examiner
Office of Petitions

SPE RESPONSE FOR CERTIFICATE OF CORRECTION

Paper No.: #25

DATE : 7/15/05

TO SPE OF : ART UNIT 2100

SUBJECT : Request for Certificate of Correction on Patent No.: RE37814

A response is requested with respect to the accompanying request for a certificate of correction.

Please complete this form and return with file, within 7 days to:
Certificates of Correction Branch - PK 3-915
Palm location **7580** - Tel. No. 305-8309

With respect to the change(s) requested, correcting Office and/or Applicant's errors, should the patent read as shown in the certificate of correction? No new matter should be introduced, nor should the scope or meaning of the claims be changed.

Henry Randall
Certificates of Correction Branch

Thank You For Your Assistance

The request for issuing the above-identified correction(s) is hereby:
Note your decision on the appropriate box.

- ☐ **Approved** — All changes apply.
- ☐ **Approved in Part** — Specify below which changes **do not** apply.
- ☒ **Denied** — State the reasons for denial below.

Comments:

The proposed certificate of correction does not comply with 37CFR 1.177(a). It does not identify each reissue application by relationship, application number, and filing date

SPE

2121
Art Unit

PTOL-306 (REV. 7/03)

U.S. DEPARTMENT OF COMMERCE Patent and Trademark

UNITED STATES PATENT AND TRADEMARK OFFICE

Commissioner for Patents
United States Patent and Trademark Office
P.O. Box 1450
Alexandria, VA 22313-1450
www.uspto.gov
DIW Nov-06

THOMAS A. BECK
15 ALAMEDA PLACE
MOUNT VERNON NY 10552

COPY MAILED
NOV 0 2 2006
OFFICE OF PETITIONS

In re Application of	:	
Afzali-Ardakani et al.	:	DECISION ON PETITION TO
Application No. 08/118,475	:	WITHDRAW HOLDING OF
Filed: 7 September, 1993	:	ABANDONMENT
Attny Docket No. IBM-109A	:	

This is a decision on the petition filed on 14 August, 2006, to withdraw the holding of abandonment in the above-identified application.

The petition is **GRANTED**.

The application was held abandoned for failure to timely submit corrected drawings in response to the Notice of Allowability mailed on 11 August, 1998, which set a three (3) month shortened statutory period for reply. Notice of Abandonment was mailed on 17 January, 2000.

Petitioners assert that the Notice mailed on 11 August, 1998, was not received because it was mailed to the wrong address due to USPTO error. Specifically, petitioners assert that a Change of Correspondence Address was filed, but that the Notice of Allowance was mailed to an old address.

In the absence of any irregularity in the mailing of the final Office action, there is a strong presumption that the final Office action was properly mailed to practitioner at the address of record. This presumption may be overcome by a showing that the final Office action was not in fact received. The showing required to establish the failure to receive an Office communication must include a statement from the practitioner stating that the Office communication was not received by the practitioner and attesting to the fact that a search of the file jacket and docket records indicates that the Office action was not received. A copy of the docket record where the non-received

Office action would have been entered had it been received and docketed must be attached to and referenced in practitioner's statement. See "Withdrawing the Holding of Abandonment When Office Actions Are Not Received" 1156 Official Gazette 53 (November 16, 1993) and M.P.E.P. § 711.03(c). The showing outlined above may not be sufficient if there are circumstances that point to a conclusion that the final Office action may have been lost after receipt rather than a conclusion that the final Office action was lost in the mail.

A review of the official file reveals that on 26 February, 1998, a Change of Correspondence was filed listing Thomas A. Beck, 15 Alameda Place, Mount Vernon, NY 10552 as the correspondence address. However, the Office communication mailed on 11 August, 1998, as well as the Notice of Abandonment mailed on 17 January, 2000, were mailed to the previous address of record and were returned as undeliverable. As such, the showing of record is that there was an irregularity in the mailing of the Notice mailed on 11 August, 1998, in that said Notice was not mailed to the proper address.

The Office apologizes for any inconvenience to petitioners.

Accordingly, the Notice of Abandonment is hereby vacated and the holding of abandonment withdrawn.

Although petitioners filed corrected drawings with the petition, the drawings have been objected to by the draftsperson. A copy of the draftsperson's review is enclosed for petitioner's reference. As the drawings are objected to, the Notice of Allowability will be remailed with a new time period for submission of corrected drawings. Petitioners should file corrected drawings.

The address on the petition is different than the correspondence address. A copy of this decision is being mailed to the address in the petition. All future correspondence, however, will be mailed solely to the address of record. A change of correspondence address should be filed if petitioners' address has changed.

The application is being referred to Technology Center 1700 Technical Support Staff for remailing of the Notice of Allowability mailed on 11 August, 1998.

Telephone inquiries concerning this matter may be directed to the undersigned at (571)272-3231.

D Wood

Douglas I. Wood
Senior Petitions Attorney
Office of Petitions

cc: Thomas A. Beck
26 Rockledge Lane
New Milford, CT 06776-3949

Encl: PTO-948

Form PTO-948 (Rev. 06/03)
Application No. 08/118475

U.S. DEPARTMENT OF COMMERCE
U.S. Patent and Trademark Office

NOTICE OF DRAFTSPERSON'S PATENT DRAWING REVIEW

The drawing(s) filed (insert date) 08/09/2004 are:

A. ____ approved by the Draftsperson under 37 CFR 1.84 or 1.152.

B. 5 objected to by the Draftsperson under 37 CFR 1.84 or 1.152 for the reasons indicated below. Corrected drawings are required.

1. DRAWINGS. 37 CFR 1.84(a): Acceptable categories of drawings: Black ink or Color (3 sets required).

___ Color drawings are not acceptable until petition is granted. Fig(s)____

___ Pencil and non black ink not permitted. Fig(s)____

2. PHOTOGRAPHS. 37 CFR 1.84(b)

___ One (1) full-tone set is required. Fig(s)____

___ Photographs may not be mounted. 37 CFR 1.84(e)

___ Photographs must meet paper size requirements of 37 CFR 1.84(f). Fig(s)____

___ Poor quality (half-tone). Fig(s)____

3. TYPE OF PAPER. 37 CFR 1.84(e)

___ Paper not flexible, strong, white, and durable. Fig(s)____

5 Erasures, alterations, overwritings. interlineations, folds, copy machine marks not accepted. Fig(s) 1-11 (Copy Marks)

4. SIZE OF PAPER. 37 CFR 1.84(f): Acceptable sizes:
21.0 cm by 29.7 cm (DIN size A4) or
21.6 cm by 27.9 cm (8 1/2x 11 inches)

___ All drawing sheets not the same size. Sheet(s)____

___ Drawings sheets not an acceptable size. Fig(s)____

5. MARGINS. 37 CFR 1.84(g): Acceptable margins: Top 2.5 cm Left 2.5 cm Right 1.5 cm Bottom 1.0 cm

___ Margins not acceptable. Fig(s)____

____Top (T) ____ Left (L)

____Right (R) ____ Bottom (B)

6. VIEWS. 37 CFR 1.84(h)

REMINDER: Specification may require revision to correspond to drawing changes, e.g., if Fig. 1 is changed to Fig. 1A, Fig 1B and Fig. 1C, etc., the specification, at the Brief Description of the Drawings, must likewise be changed.

___Views not labeled separately or properly. Fig(s)____

7. SECTIONAL VIEWS. 37 CFR 1.84(h)(3)

____ Sectional designation should be noted with Arabic or Roman numbers. Fig(s)____

8. ARRANGEMENT OF VIEWS. 37 CFR 1.84(i)

___ Words do not appear on a horizontal, left-to-right fashion when page is either upright or turned so that the top becomes the right side, except for graphs. Fig(s)____

9. SCALE. 37 CFR 1.84(k)

___ Scale not large enough to show mechanism without crowding when drawing is reduced in size to two-thirds in reproduction. Fig(s)____

10. CHARACTER OF LINES, NUMBERS, & LETTERS. 37 CFR 1.84(l)

___ Lines, numbers & letters not uniformly thick and well defined, clean, durable, and black (poor line quality). Fig(s)____

11. SHADING. 37 CFR 1.84(m)

___ Solid black areas pale. Fig(s) ____

___ Solid black shading not permitted. Fig(s)____

12. NUMBERS, LETTERS, & REFERENCE CHARACTERS. 37 CFR 1.84(p)

___ Numbers and reference characters not plain and legible. Fig(s)____

___ Figure legends are poor. Fig(s)____

___ Numbers and reference characters not oriented in the same direction as the view. 37 CFR 1.84(p)(1) Fig(s)____

___ English alphabet not used. 37 CFR 1.84(p)(2) Fig(s)____

___ Numbers, letters and reference characters must be at least 32 cm (1/8 inch) in height. 37 CFR 1.84(p)(3). Fig(s)____

13. LEAD LINES. 37 CFR 1.84(q)

___ Lead lines missing. Fig(s)____

14. NUMBERING OF SHEETS OF DRAWINGS. 37 CFR 1.84(t)

___ Sheets not numbered consecutively, and in Arabic numbers beginning with number 1. Sheet(s)____

15. NUMBERING OF VIEWS. 37 CFR 1.84(u)

___ Views not numbered consecutively, and in Arabic numerals, beginning with number 1. Fig(s)____

16. DESIGN DRAWINGS. 37 CFR 1.152

___ Surface shading shown not appropriate. Fig(s)____

___ Solid black surface shading is not permitted except when used to represent the color black as well as color contrast. Fig(s)____

COMMENTS:

Reviewer SON LAM

Date 10/31/2006

If you have questions, call (703) ~~305-8404~~ 305-0333 (EXT. 133)

Attachment to Paper No. ____

☆ U.S. GOVERNMENT PRINTING OFFICE: 2003-300-153

UNITED STATES PATENT AND TRADEMARK OFFICE

UNITED STATES DEPARTMENT OF COMMERCE
United States Patent and Trademark Office
Address: COMMISSIONER FOR PATENTS
P.O. Box 1450
Alexandria, Virginia 22313-1450
www.uspto.gov

THOMAS A. BECK
6136 West Kimberly Way
Glendale, AZ 85308-7627

Mail Date: 04/23/2010

Applicant	: ALI AFZALI-ARDAKANI	: DECISION ON REQUEST FOR
Patent Number	: 7585431	: RECALCULATION of PATENT
Issue Date	: 09/08/2009	: TERM ADJUSTMENT IN VIEW
Appliction No	: 08/118,475	: OF WYETH
Filed	: 09/07/1993	:
		:

The Patentee's Request for Recalculation is **DISMISSED.**

This Request is deemed ineligible for consideration for one or more of the following reasons:

(A). The patent for which PTA recalculation is requested is either a design or reissue application or is a reexamination proceeding;

(B). The patent for which PTA recalculation is requested resulted from a utility or plant application filed under 35 USC 111(a) before May 29, 2000 and no CPA filed in the application on/after May 29, 2000;

(C). The patent for which PTA recalculation is requested resulted from an international application in which the international filing date was before May 29, 2000 and no CPA filed in the application on/after May 29, 2000;

(D). The patent for which PTA recalculation is requested issued on/after March 2, 2010;

(E). The Request for Recalculation was filed more than 180 days after the grant date of the patent and the request was not filed within two months of a dismissal of a request for reconsideration of the of the patent term under 37 CFR 1.705(d);

(F). The Request for Recalculation is not solely limited to USPTO pre-Wyeth interpretation of 35 U.S.C. 154(b)(2)(A);

or

(G). A civil action was filed pursuant to 35 U.S.C. 154(b)(4)(A)concerning the same patent at issue in this request.

Patentee may file a reply to this decision dismissing the Request for Recalculation. Patentee must file such reply within one month or thirty days, whichever is longer, of the mail date of the decision dismissing the Request for Recalculation. No fee is required if patentee is asserting in the reply that the dismissal for ineligibility is improper.

Patentee should use document code PET.OP if electronically filing a reply to this dismissal. If the USPTO finds that the request was improperly deemed ineligible, the USPTO will mail applicant a recalculation determination.

Patentee should be aware that in order to preserve the right to review in the United States District Court for the District of Columbia of the USPTO patent term adjustment determination, patentee must ensure that he or she also take the steps required under 35 U.S.C. 154(b)(4)(A). Nothing in the request for recalculation should be construed as providing an alternative time frame for commencing a civil action under 35 U.S.C. 154 (b)(4)(A).

Any questions concerning this decision should be directed to the Office of Patent Legal Administration at 571-272-7702.

UNITED STATES PATENT AND TRADEMARK OFFICE

Commissioner for Patents
United States Patent and Trademark Office
P.O. Box 1450
Alexandria, VA 22313-1450
www.uspto.gov

In re Patent No. 5391925
Issue Date: February 21,1995
Application No. 08118629
Filed: September 10,1993
Attorney Docket No. 41466

:
:DECISION GRANTING PETITION
:UNDER 37 CFR 1.378(c)
:

This is a decision on the electronic petition, filed December 11,2008 ,under 37 CFR 1.378(c) to accept the unintentionally delayed payment of the 11.5 year maintenance fee for the above-identified patent.

The petition is **GRANTED**.

The maintenance fee is accepted, and the above-identified patent reinstated as of December 11,2008 . This decision also constitutes notice that the fee has been accepted. An electronic copy of the petition and this decision has been created as an entry in the Image File Wrapper. Nevertheless, petitioner should print and retain an independent copy.

Telephone inquiries related to this electronic decision should be directed to the Electronic Business Center at 1-866-217-9197.

Under the Paperwork Reduction Act of 1995, no persons are required to respond to a collection of information unless it displays valid OMB control number.

PETITION TO ACCEPT UNINTENTIONALLY DELAYED PAYMENT OF MAINTENANCE FEE IN AN EXPIRED PATENT (37 CFR 1.378(c))

Patent Number	Issue Date (YYYY-MM-DD)	Application Number	Filing Date (YYYY-MM-DD)	Docket Number (if applicable)
5391925	1995-02-21	08118629	1993-09-10	08-1646

CAUTION: Maintenance fee (and surcharge, if any) payment must correctly identify: (1) the patent number and (2) the application number of the actual U.S. application leading to issuance of that patent to ensure the fee(s) is/are associated with the correct patent. 37 CFR 1.366(c) and (d).

SMALL ENTITY
☐ Patentee claims, or has previously claimed, small entity status. See 37 CFR 1.27.

LOSS OF ENTITLEMENT TO SMALL ENTITY STATUS
☐ Patentee is no longer entitled to small entity status. See 37 CFR 1.27(g)

NOT Small Entity		Small Entity	
Fee	Code	Fee	Code
○ 3 ½ year	(1551)	○ 3 ½ year	(2551)
○ 7 ½ year	(1552)	○ 7 ½ year	(2552)
◉ 11 ½ year	(1553)	○ 11 ½ year	(2553)

SURCHARGE
The surcharge required by 37 CFR 1.20(i)(2) (Fee Code 1558) must be paid as a condition of accepting unintentionally delayed payment of the maintenance fee.

MAINTENANCE FEE (37 CFR 1.20(e)-(g))
The appropriate maintenance fee must be submitted with this petition.

STATEMENT
THE UNDERSIGNED CERTIFIES THAT THE DELAY IN PAYMENT OF THE MAINTENANCE FEE TO THIS PATENT WAS UNINTENTIONAL

PETITIONER(S) REQUEST THAT THE DELAYED PAYMENT OF THE MAINTENANCE FEE BE ACCEPTED AND THE PATENT REINSTATED

THIS PORTION MUST BE COMPLETED BY THE SIGNATORY OR SIGNATORIES

37 CFR 1.378(d) states: "Any petition under this section must be signed by an attorney or agent registered to practice before the Patent and Trademark Office, or by the patentee, the assignee, or other party in interest."

I certify, in accordance with 37 CFR 1.4(d)(4) that I am

◉ An attorney or agent registered to practice before the Patent and Trademark Office

○ A sole patentee

○ A joint patentee; I certify that I am authorized to sign this submission on behalf of all the other patentees.

○ A joint patentee; all of whom are signing this e-petition

○ The assignee of record of the entire interest

Patent Practitioner			
A signature of the applicant or representative is required in accordance with 37 CFR 1.33 and 10.18. Please see 37 CFR 1.4(d) for the form of the signature			
Signature	/Thomas E. Wettermann/	Date (YYYY-MM-DD)	2008-12-11
Name	Thomas E. Wettermann	Registration Number	41523

This collection of information is required by 37 CFR 1.378(c). The information is required to obtain or retain a benefit by the public which is to file (and by the USPTO to process) an application. Confidentiality is governed by 35 U.S.C. 122 and 37 CFR 1.11 and 1.14. This collection is estimated to take 1 hour to complete, including gathering, preparing, and submitting the completed application form to the USPTO. Time will vary depending upon the individual case. Any comments on the amount of time you require to complete this form and/ or suggestions for reducing this burden, should be sent to the Chief Information Officer, U.S. Patent and Trademark Office, U.S. Department of Commerce, P.O. Box 1450, Alexandria, VA 22313-1450. DO NOT SEND FEES OR COMPLETED FORMS TO THIS ADDRESS. **This form can only be used when in conjunction with EFS-Web. If this form is mailed to the USPTO, it may cause delays in reinstating the patent.**

Privacy Act Statement

The Privacy Act of 1974 (P.L. 93-579) requires that you be given certain information in connection with your submission of the attached form related to a patent application or patent. Accordingly, pursuant to the requirements of the Act, please be advised that: (1) the general authority for the collection of this information is 35 U.S.C. 2(b)(2); (2) furnishing of the information solicited is voluntary; and (3) the principal purpose for which the information is used by the U.S. Patent and Trademark Office is to process and/or examine your submission related to a patent application or patent. If you do not furnish the requested information, the U.S. Patent and Trademark Office may not be able to process and/or examine your submission, which may result in termination of proceedings or abandonment of the application or expiration of the patent.

The information provided by you in this form will be subject to the following routine uses:

1. The information on this form will be treated confidentially to the extent allowed under the Freedom of Information Act (5 U.S.C. 552) and the Privacy Act (5 U.S.C. 552a). Records from this system of records may be disclosed to the Department of Justice to determine whether the Freedom of Information Act requires disclosure of these record s.

2. A record from this system of records may be disclosed, as a routine use, in the course of presenting evidence to a court, magistrate, or administrative tribunal, including disclosures to opposing counsel in the course of settlement negotiations.

3. A record in this system of records may be disclosed, as a routine use, to a Member of Congress submitting a request involving an individual, to whom the record pertains, when the individual has requested assistance from the Member with respect to the subject matter of the record.

4. A record in this system of records may be disclosed, as a routine use, to a contractor of the Agency having need for the information in order to perform a contract. Recipients of information shall be required to comply with the requirements of the Privacy Act of 1974, as amended, pursuant to 5 U.S.C. 552a(m).

5. A record related to an International Application filed under the Patent Cooperation Treaty in this system of records may be disclosed, as a routine use, to the International Bureau of the World Intellectual Property Organization, pursuant to the Patent Cooperation Treaty.

6. A record in this system of records may be disclosed, as a routine use, to another federal agency for purposes of National Security review (35 U.S.C. 181) and for review pursuant to the Atomic Energy Act (42 U.S.C. 218(c)).

7. A record from this system of records may be disclosed, as a routine use, to the Administrator, General Services, or his/her designee, during an inspection of records conducted by GSA as part of that agency's responsibility to recommend improvements in records management practices and programs, under authority of 44 U.S.C. 2904 and 2906. Such disclosure shall be made in accordance with the GSA regulations governing inspection of records for this purpose, and any other relevant (i.e., GSA or Commerce) directive. Such disclosure shall not be used to make determinations about individuals.

8. A record from this system of records may be disclosed, as a routine use, to the public after either publication of the application pursuant to 35 U.S.C. 122(b) or issuance of a patent pursuant to 35 U.S.C. 151. Further, a record may be disclosed, subject to the limitations of 37 CFR 1.14, as a routine use, to the public if the record was filed in an application which became abandoned or in which the proceedings were terminated and which application is referenced by either a published application, an application open to public inspections or an issued patent.

9. A record from this system of records may be disclosed, as a routine use, to a Federal, State, or local law enforcement agency, if the USPTO becomes aware of a violation or potential violation of law or regulation.

UNITED STATES PATENT AND TRADEMARK OFFICE

Commissioner for Patents
United States Patent and Trademark Office
P.O. Box 1450
Alexandria, VA 22313-1450
www.uspto.gov

MAILED
NOV 24 2009
OFFICE OF PETITIONS

BLACK LOWE & GRAHAM, PLLC
701 FIFTH AVENUE
SUITE 4800
SEATTLE WA 98104

In re Patent No. 5,954,638	:	
Issue Date: 09/21/1999	:	
Application No. 08/118,810	:	DECISION ON PETITION
Filed: 09/10/1993	:	
For: SURGICAL HARDWARE FOR	:	
HOLDING LIVE TISSUE	:	

This is a decision on the petition under 37 CFR 1.378(c), filed April 2, 2009, to accept the unintentionally delayed payment of the maintenance fee for the above-identified patent.

The petition is **granted**.

The patent issued September 21, 1999. The grace period for paying the maintenance fee expired on September 22, 2007. This petition was filed timely under the provisions of 37 CFR 1.378(c) because it was filed within twenty-four months after the six-month grace period provided in 37 CFR 1.362(e). Accordingly, the maintenance fee in this case is accepted and the above-identified patent is hereby reinstated as of the mail date of this decision.

The $1,640.00 surcharge and the $1,240.00 maintenance fee due at 7.5 years will be charged to the Deposit Account as authorized.

Telephone inquiries concerning this decision should be directed to the undersigned at (571) 272-3211.

Christina Tartera Donnell

Christina Tartera Donnell
Senior Petitions Attorney
Office of Petitions

Under the Paperwork Reduction Act of 1995, no persons are required to respond to a collection of information unless it displays valid OMB control number.

PETITION TO ACCEPT UNINTENTIONALLY DELAYED PAYMENT OF MAINTENANCE FEE IN AN EXPIRED PATENT (37 CFR 1.378(c))

Patent Number	Issue Date (YYYY-MM-DD)	Application Number	Filing Date (YYYY-MM-DD)	Docket Number (if applicable)
5,425,346	1995-06-20	08/120,545	1993-09-14	11495-297

CAUTION: Maintenance fee (and surcharge, if any) payment must correctly identify: (1) the patent number and (2) the application number of the actual U.S. application leading to issuance of that patent to ensure the fee(s) is/are associated with the correct patent. 37 CFR 1.366(c) and (d).

SMALL ENTITY
☐ Patentee claims, or has previously claimed, small entity status. See 37 CFR 1.27.

LOSS OF ENTITLEMENT TO SMALL ENTITY STATUS
☐ Patentee is no longer entitled to small entity status. See 37 CFR 1.27(g)

NOT Small Entity		Small Entity	
Fee	Code	Fee	Code
○ 3 ½ year	(1551)	○ 3 ½ year	(2551)
○ 7 ½ year	(1552)	○ 7 ½ year	(2552)
◉ 11 ½ year	(1553)	○ 11 ½ year	(2553)

SURCHARGE
The surcharge required by 37 CFR 1.20(i)(2) (Fee Code 1558) must be paid as a condition of accepting unintentionally delayed payment of the maintenance fee.

MAINTENANCE FEE (37 CFR 1.20(e)-(g))
The appropriate maintenance fee must be submitted with this petition.

STATEMENT
THE UNDERSIGNED CERTIFIES THAT THE DELAY IN PAYMENT OF THE MAINTENANCE FEE TO THIS PATENT WAS UNINTENTIONAL

PETITIONER(S) REQUEST THAT THE DELAYED PAYMENT OF THE MAINTENANCE FEE BE ACCEPTED AND THE PATENT REINSTATED

THIS PORTION MUST BE COMPLETED BY THE SIGNATORY OR SIGNATORIES

37 CFR 1.378(d) states: "Any petition under this section must be signed by an attorney or agent registered to practice before the Patent and Trademark Office, or by the patentee, the assignee, or other party in interest."

I certify, in accordance with 37 CFR 1.4(d)(4) that I am

◉ An attorney or agent registered to practice before the Patent and Trademark Office

○ A sole patentee

○ A joint patentee; I certify that I am authorized to sign this submission on behalf of all the other patentees.

○ A joint patentee; all of whom are signing this e-petition

○ The assignee of record of the entire interest

Patent Practitioner			
A signature of the applicant or representative is required in accordance with 37 CFR 1.33 and 10.18. Please see 37 CFR 1.4(d) for the form of the signature			
Signature	/stephencsmith/	Date (YYYY-MM-DD)	2007-11-08
Name	Stephen C Smith	Registration Number	56250

This collection of information is required by 37 CFR 1.378(c). The information is required to obtain or retain a benefit by the public which is to file (and by the USPTO to process) an application. Confidentiality is governed by 35 U.S.C. 122 and 37 CFR 1.11 and 1.14. This collection is estimated to take 1 hour to complete, including gathering, preparing, and submitting the completed application form to the USPTO. Time will vary depending upon the individual case. Any comments on the amount of time you require to complete this form and/ or suggestions for reducing this burden, should be sent to the Chief Information Officer, U.S. Patent and Trademark Office, U.S. Department of Commerce, P.O. Box 1450, Alexandria, VA 22313-1450. DO NOT SEND FEES OR COMPLETED FORMS TO THIS ADDRESS. **This form can only be used when in conjunction with EFS-Web. If this form is mailed to the USPTO, it may cause delays in reinstating the patent.**

Privacy Act Statement

The Privacy Act of 1974 (P.L. 93-579) requires that you be given certain information in connection with your submission of the attached form related to a patent application or patent. Accordingly, pursuant to the requirements of the Act, please be advised that: (1) the general authority for the collection of this information is 35 U.S.C. 2(b)(2); (2) furnishing of the information solicited is voluntary; and (3) the principal purpose for which the information is used by the U.S. Patent and Trademark Office is to process and/or examine your submission related to a patent application or patent. If you do not furnish the requested information, the U.S. Patent and Trademark Office may not be able to process and/or examine your submission, which may result in termination of proceedings or abandonment of the application or expiration of the patent.

The information provided by you in this form will be subject to the following routine uses:

1. The information on this form will be treated confidentially to the extent allowed under the Freedom of Information Act (5 U.S.C. 552) and the Privacy Act (5 U.S.C. 552a). Records from this system of records may be disclosed to the Department of Justice to determine whether the Freedom of Information Act requires disclosure of these record s.

2. A record from this system of records may be disclosed, as a routine use, in the course of presenting evidence to a court, magistrate, or administrative tribunal, including disclosures to opposing counsel in the course of settlement negotiations.

3. A record in this system of records may be disclosed, as a routine use, to a Member of Congress submitting a request involving an individual, to whom the record pertains, when the individual has requested assistance from the Member with respect to the subject matter of the record.

4. A record in this system of records may be disclosed, as a routine use, to a contractor of the Agency having need for the information in order to perform a contract. Recipients of information shall be required to comply with the requirements of the Privacy Act of 1974, as amended, pursuant to 5 U.S.C. 552a(m).

5. A record related to an International Application filed under the Patent Cooperation Treaty in this system of records may be disclosed, as a routine use, to the International Bureau of the World Intellectual Property Organization, pursuant to the Patent Cooperation Treaty.

6. A record in this system of records may be disclosed, as a routine use, to another federal agency for purposes of National Security review (35 U.S.C. 181) and for review pursuant to the Atomic Energy Act (42 U.S.C. 218(c)).

7. A record from this system of records may be disclosed, as a routine use, to the Administrator, General Services, or his/her designee, during an inspection of records conducted by GSA as part of that agency's responsibility to recommend improvements in records management practices and programs, under authority of 44 U.S.C. 2904 and 2906. Such disclosure shall be made in accordance with the GSA regulations governing inspection of records for this purpose, and any other relevant (i.e., GSA or Commerce) directive. Such disclosure shall not be used to make determinations about individuals.

8. A record from this system of records may be disclosed, as a routine use, to the public after either publication of the application pursuant to 35 U.S.C. 122(b) or issuance of a patent pursuant to 35 U.S.C. 151. Further, a record may be disclosed, subject to the limitations of 37 CFR 1.14, as a routine use, to the public if the record was filed in an application which became abandoned or in which the proceedings were terminated and which application is referenced by either a published application, an application open to public inspections or an issued patent.

9. A record from this system of records may be disclosed, as a routine use, to a Federal, State, or local law enforcement agency, if the USPTO becomes aware of a violation or potential violation of law or regulation.

UNITED STATES PATENT AND TRADEMARK OFFICE

Commissioner for Patents
United States Patent and Trademark Office
P.O. Box 1450
Alexandria, VA 22313-1450
www.uspto.gov

In re Patent No. 5425346
Issue Date: June 20,1995
Application No. 08120545
Filed: September 14,1993
Attorney Docket No.

:

:DECISION GRANTING PETITION
:UNDER 37 CFR 1.378(c)

:

This is a decision on the electronic petition, filed November 8,2007 ,under 37 CFR 1.378(c) to accept the unintentionally delayed payment of the 11.5 year maintenance fee for the above-identified patent.

The petition is GRANTED.

The maintenance fee is accepted, and the above-identified patent reinstated as of November 8,2007 . This decision also constitutes notice that the fee has been accepted. An electronic copy of the petition and this decision has been created as an entry in an Image File Wrapper. Nevertheless, petitioner should print and retain an independent copy

Telephone inquires related to this electronic decision should be directed to the Electronic Business Center at 1-866-217-9197.

UNITED STATES PATENT AND TRADEMARK OFFICE

Commissioner for Patents
United States Patent and Trademark Office
P.O. Box 1450
Alexandria, VA 22313-1450
www.uspto.gov

DOUGLAS GILBERT
Hewlett-Packard CO
19111 Prunerdige Ave
MSC 4059
Cupertino, CA 95014

COPY MAILED

SEP 2 2 2008

OFFICE OF PETITIONS

ON PETITION

In re Patent No. 5,499,330 :
Issue Date: March 12, 1996 :
Application No. 08/123,403 :
Filed: September 17, 1993 :
Attorney Docket No. PD930214 :

This is a decision on the petition under 37 CFR 1.378(c), filed May 21, 2008, to accept the unintentionally delayed payment of a maintenance fee for the above-identified patent.

The petition is **GRANTED**.

This patent expired on March 12, 2008 for failure to pay the 11.5 maintenance fee. Since this petition was submitted within twenty-four months after the six-month grace period provided in 37 CFR 1.362(e), the petition was timely filed under the provisions of 37 CFR 1.378(c).

The maintenance fee is hereby accepted and the above-identified patent is reinstated as of the mail date of this decision.

The required surcharge and maintenance fee have been charged to petitioners' deposit account, as authorized.

There is no indication that the person signing the petition was ever given a power of attorney to represent patentee. If the person signing the petition desires to receive future correspondence regarding this application, the appropriate power of attorney documents must be submitted. While a courtesy copy of this decision is being mailed to the person signing the petition, all future correspondence will be directed to the address currently of record until appropriate instructions are received.

Telephone inquiries concerning this decision should be directed to the undersigned at (571) 272-3205.

The patent file is being forwarded to Files Repository.

Alesia M. Brown
Petitions Attorney
Office of Petitions

UNITED STATES PATENT AND TRADEMARK OFFICE

UNITED STATES DEPARTMENT OF COMMERCE
United States Patent and Trademark Office
Address: COMMISSIONER FOR PATENTS
P.O. Box 1450
Alexandria, Virginia 22313-1450
www.uspto.gov

Gregory A. Holt
820 Lake Fort Parkway
Louisville, KY 40245

Mail Date: 04/21/2010

Applicant	: GREGORY A. HOLT	: DECISION ON REQUEST FOR
Patent Number	: 5893893	: RECALCULATION of PATENT
Issue Date	: 04/13/1999	: TERM ADJUSTMENT IN VIEW
Appliction No	: 08/124,361	: OF WYETH
Filed	: 09/20/1993	:
		:

The Patentee's Request for Recalculation is **DISMISSED.**

This Request is deemed ineligible for consideration for one or more of the following reasons:

(A). The patent for which PTA recalculation is requested is either a design or reissue application or is a reexamination proceeding;

(B). The patent for which PTA recalculation is requested resulted from a utility or plant application filed under 35 USC 111(a) before May 29, 2000 and no CPA filed in the application on/after May 29, 2000;

(C). The patent for which PTA recalculation is requested resulted from an international application in which the international filing date was before May 29, 2000 and no CPA filed in the application on/after May 29, 2000;

(D). The patent for which PTA recalculation is requested issued on/after March 2, 2010;

(E). The Request for Recalculation was filed more than 180 days after the grant date of the patent and the request was not filed within two months of a dismissal of a request for reconsideration of the of the patent term under 37 CFR 1.705(d);

(F). The Request for Recalculation is not solely limited to USPTO pre-Wyeth interpretation of 35 U.S.C. 154(b)(2)(A);

or

(G). A civil action was filed pursuant to 35 U.S.C. 154(b)(4)(A)concerning the same patent at issue in this request.

Patentee may file a reply to this decision dismissing the Request for Recalculation. Patentee must file such reply within one month or thirty days, whichever is longer, of the mail date of the decision dismissing the Request for Recalculation. No fee is required if patentee is asserting in the reply that the dismissal for ineligibility is improper.

Patentee should use document code PET.OP if electronically filing a reply to this dismissal. If the USPTO finds that the request was improperly deemed ineligible, the USPTO will mail applicant a recalculation determination.

Patentee should be aware that in order to preserve the right to review in the United States District Court for the District of Columbia of the USPTO patent term adjustment determination, patentee must ensure that he or she also take the steps required under 35 U.S.C. 154(b)(4)(A). Nothing in the request for recalculation should be construed as providing an alternative time frame for commencing a civil action under 35 U.S.C. 154 (b)(4)(A).

Any questions concerning this decision should be directed to the Office of Patent Legal Administration at 571-272-7702.

UNITED STATES PATENT AND TRADEMARK OFFICE

COMMISSIONER FOR PATENTS
UNITED STATES PATENT AND TRADEMARK OFFICE
P.O. BOX 1450
ALEXANDRIA, VA 22313-1450
www.uspto.gov
DW 03-04

PATREA L. PABST
HOLLAND & KNIGHT LLP
SUITE 2000, ONE ATLANTIC CENTER
1201 WEST PEACHTREE STREET, N.E.
ATLANTA GA 30309-3400

COPY MAILED

MAR 12 2004

OFFICE OF PETITIONS

In re Application of	:	
Atkinson et al.	:	
Application No. 08/126,505	:	ON PETITION
Filed: 24 September, 2003	:	
Attorney Docket No. WU101CIP	:	

This is a decision on the petition filed on 9 February, 2004, which requests under 37 C.F.R. §1.182 that a previously filed terminal disclaimer be withdrawn. The petition fee has been received.

The petition is granted.

Petitioner asserts that the terminal disclaimer filed 16 December, 1996, is no longer required. As the examiner has concurred, the requested relief can be favorably considered.

This application is being forwarded to Technology Center 1600 for correction of PALM and file records consistent with this decision.

Telephone inquiries relative to this decision should be directed to the undersigned at (703) 308-6918.

D Wood

Douglas I. Wood
Senior Petitions Attorney
Office of Petitions

UNITED STATES PATENT AND TRADEMARK OFFICE

Commissioner for Patents
United States Patent and Trademark Office
P.O. Box 1450
Alexandria, VA 22313-1450
www.uspto.gov

JJGJr: 07-06

Paper No: 10

OLE K. NILSSEN
200 N HARRISON STREET
SUITE 103
ALGONQUIN, IL 60102

COPY MAILED

SEP 18 2006

OFFICE OF PETITIONS

In re Application of	:	
Nilssen	:	
Application No. 08/126,706	:	NOTICE
Filed: 23 September, 1993	:	
Patent No. 5,402,043	:	
Issue Date 28 March, 1995	:	
Attorney Docket No. (None)	:	

This is a notice regarding the request for acceptance of a fee deficiency submission (properly considered under 37 C.F.R. §1.28) filed 5 December, 2005

The Office regrets the delay in addressing this matter, however, the papers were received by the attorneys in the Office of Petitions only as of this writing.

NOTE: **Petitioners always are reminded and placed on Notice that the Rules of Practice mandate that Petitioners provide both the application and patent numbers, as well as filing and issue dates, in all matters regarding this patent.**[1]

It remains Petitioner's responsibility to ensure that the proper fees are timely offered and accepted.

[1] See: 37 C.F.R. §1.366 and MPEP §2515.

On September 1, 1998, the Court of Appeals for the Federal Circuit held that 37 C.F.R. §1.28(c) is the sole provision governing the time for correction of the erroneous payment of the issue fee as a small entity. See DH Technology v. Synergystex International, Inc. 154 F.3d 1333, 47 USPQ2d 1865 (Fed. Cir. Sept. 1, 1998).

The Office no longer investigates or rejects original or reissue applications under 37 C.F.R. §1.56. 1098 Off. Gaz. Pat. Office 502 (January 3, 1989). Therefore, nothing in this notice is intended to imply that an investigation was done.

Your fee deficiency submission under 37 C.F.R. §1.28 hereby is **ACCEPTED**

Inquiries regarding this application should be directed to the Technology Center and the general phone number for the Office of Petitions for status requests is (571) 272-3282. It is noted, however, that all practice before the Office is in writing (see: 37 C.F.R. §1.2[2]) and the proper authority for action on any matter in this regard are the statutes (35 U.S.C.), regulations (37 C.F.R.) and the commentary on policy (MPEP). Therefore, no telephone discussion may be controlling or considered authority for Petitioner's action(s).

John J. Gillon, Jr.
Senior Attorney
Office of Petitions

---

[2] The regulations at 37 C.F.R. §1.2 provide:
§1.2 Business to be transacted in writing.
All business with the Patent and Trademark Office should be transacted in writing. The personal attendance of applicants or their attorneys or agents at the Patent and Trademark Office is unnecessary. The action of the Patent and Trademark Office will be based exclusively on the written record in the Office. No attention will be paid to any alleged oral promise, stipulation, or understanding in relation to which there is disagreement or doubt.

UNITED STATES PATENT AND TRADEMARK OFFICE

COMMISSIONER FOR PATENTS
UNITED STATES PATENT AND TRADEMARK OFFICE
WASHINGTON, D.C. 20231
www.uspto.gov

Paper No. 29

JOHN A. CASTELLANO
BIRCH, STEWART, KOLASCH & BIRCH, LLP
P.O. BOX 747
FALLS CHURCH, VA 22040-0747

COPY MAILED

JUL 2 0 2000

SPECIAL PROGRAMS OFFICE
DAC FOR PATENTS

In re Application of	:	
Hendrick van Bokhorst et al.	:	
Application No. 08/127,268	:	DECISION ON PETITION
Filed: September 27, 1993	:	
Attorney Docket No. 2925-0194P	:	

This is a decision on the petition under 37 CFR 1.137(b), filed May 17, 2000, to revive the above-identified application.

The petition is **GRANTED**.

This application became abandoned on February 17, 2000 for failure to timely reply to the December 16, 1999 Board of Patent Appeals decision. A Notice of Abandonment was mailed on March 14, 2000.

This application is being revived only for purposes of continuity with the Continued Prosecution Application (CPA) filed May 17, 2000. This application is again abandoned in favor of the CPA.

Under the circumstances of the above-identified application, the requirement in 37 CFR 1.137(c) for a terminal disclaimer is hereby *sua sponte* waived. See 37 CFR 1.183.

Pursuant to your instructions, the Continued Prosecution and Petition fees will be charged to Deposit Account No. 12-2325.

This application is being forwarded to Technology Center 2700 for processing the CPA.

Telephone inquiries concerning this matter should be directed to Petitions Attorney Nelson B. Snyder III at (703) 305-0011.

Beverly M. Flanagan
Supervisory Petitions Examiner
Office of Petitions
Office of the Deputy Assistant Commissioner
for Patent Examination Policy

UNITED STATES PATENT AND TRADEMARK OFFICE

Commissioner for Patents
United States Patent and Trademark Office
P.O. Box 1450
Alexandria, VA 22313-1450
www.uspto.gov

Paper No.

HARNESS DICKEY & PIERCE
P.O. BOX 8910
RESTON, VA 20195

COPY MAILED

NOV 0 2 2004

OFFICE OF PETITIONS

ON PETITION

In re Patent No. 5,370,841 :
Issue Date: December 6, 1994 :
Application No. 08/128,074 :
Filed: September 29, 1993 :
Patentee(s) Joseph A. McDonnell :

This is a decision on the petition under 37 CFR 1.378(c), filed October 19, 2004, to accept the delayed payment of a maintenance fee for the above-identified patent.

The petition is **GRANTED**.

The maintenance fee is hereby accepted and the above-identified patent is reinstated as of the mail date of this decision.

Petitioner is advised that a maintenance fee payment must identify the patent to which it relates by at least the patent number and the application, see 37 CFR 1.366(c)).

The Revocation of Power of Attorney... filed on October 19, 2004 is entered and made of record.

Telephone inquiries concerning this decision should be directed to Wan Laymon at (571) 272-3220.

The patent file is being forwarded to Files Repository.

Wan Laymon
Petitions Examiner
Office of Petitions
Office of the Deputy Commissioner
for Patent Examination Policy

Attachment: Notice Regarding Change of Power of Attorney
Notice of Acceptance of Power of Attorney

UNITED STATES
PATENT AND
TRADEMARK OFFICE

Under Secretary of Commerce for Intellectual Property and
Director of the United States Patent and Trademark Office
Washington, DC 20231
www.USPTO.gov

Mailed: MAR 31 2003

WAK
Paper Number 29

In re application of
Ueda, Kenji et al.
Serial No. 08/128,143
Filed: September 29, 1993
For: HOLOGRAM RECORDING SHEET, HOLOGRAPHIC OPTICAL ELEMENT USING SAID SHEET, AND ITS PRODUCTION PROCESS

DECISION ON PETITION

This is a decision from the applicants' REQUEST FOR PETITION FOR EXTENSION OF TIME UNDER 37 C.F.R. 1.136(b) filed February 21, 2003.

Applicants received a supplemental Examiner's Answer dated January 3, 2003. The Supplemental Answer was authorized by a Remand dated September 16, 2002. The Remand involved the consideration and application of the full English translations of Japanese language references. The Examiner has provided Applicants with full English language translations attached to the Examiner's Supplemental Answer.

Applicants petition for an extension of time of two months because Applicants submit that the original two month period for reply provided by 37 CFR 1.193(b)(1) fails to afford Applicants with the requisite time to reply. Applicants cite as reasons that it would take considerable time to review the full translations that were incorporated into the Examiner's Answer; additional time will be required to communicate between Applicants' representatives in the United States and Applicants in Japan and that the original attorney handling the case is no longer employed by Applicants' representatives. It was further noted that the case has been on Appeal for approximately seven years.

§ 1.136 Extensions of time.

(a)

(1) If an applicant is required to reply within a nonstatutory or shortened statutory time period, applicant may extend the time period for reply up to the earlier of the expiration of any maximum period set by statute or five months after the time period set for reply, if a petition for an extension of time and the fee set in § 1.17(a) are filed, unless:

(i) Applicant is notified otherwise in an Office action;
(ii) The reply is a reply brief submitted pursuant to § 1.193(b);
(iii) The reply is a request for an oral hearing submitted pursuant to § 1.194(b);
(iv) The reply is to a decision by the Board of Patent Appeals and Interferences pursuant to § 1.196, § 1.197 or § 1.304; or
(v) The application is involved in an interference declared pursuant to § 1.611.

(2) The date on which the petition and the fee have been filed is the date for purposes of determining the period of extension and the corresponding amount of the fee. The expiration of the time period is determined by

the amount of the fee paid. A reply must be filed prior to the expiration of the period of extension to avoid abandonment of the application (§ 1.135), but in no situation may an applicant reply later than the maximum time period set by statute, or be granted an extension of time under paragraph (b) of this section when the provisions of this paragraph are available. See § 1.136(b) for extensions of time relating to proceedings pursuant to §§ 1.193(b), 1.194, 1.196 or 1.197; § 1.304 for extensions of time to appeal to the U.S. Court of Appeals for the Federal Circuit or to commence a civil action; § 1.550(c) for extensions of time in ex parte reexamination proceedings, § 1.956 for extensions of time in inter partes reexamination proceedings; and § 1.645 for extensions of time in interference proceedings.

(3) A written request may be submitted in an application that is an authorization to treat any concurrent or future reply, requiring a petition for an extension of time under this paragraph for its timely submission, as incorporating a petition for extension of time for the appropriate length of time. An authorization to charge all required fees, fees under § 1.17, or all required extension of time fees will be treated as a constructive petition for an extension of time in any concurrent or future reply requiring a petition for an extension of time under this paragraph for its timely submission. Submission of the fee set forth in § 1.17(a) will also be treated as a constructive petition for an extension of time in any concurrent reply requiring a petition for an extension of time under this paragraph for its timely submission.

(b) When a reply cannot be filed within the time period set for such reply and the provisions of paragraph (a) of this section are not available, the period for reply will be extended only for sufficient cause and for a reasonable time specified. Any request for an extension of time under this paragraph must be filed on or before the day on which such reply is due, but the mere filing of such a request will not affect any extension under this paragraph. In no situation can any extension carry the date on which reply is due beyond the maximum time period set by statute. See § 1.304 for extensions of time to appeal to the U.S. Court of Appeals for the Federal Circuit or to commence a civil action; § 1.645 for extensions of time in interference proceedings; § 1.550(c) for extensions of time in ex parte reexamination proceedings; and § 1.956 for extensions of time in inter partes reexamination proceedings.

DECISION

The PETITION is **granted**.

Applicants have fulfilled the requirements under 37 CFR 1.136(b).

JMStone

Jacqueline M. Stone, Director
Technology Center 1700
Chemical and Materials Engineering

Sughrue Mion, PLLC
2100 Pennsylvania Avenue, N.W.
Washington, DC 20037-3202

Under the Paperwork Reduction Act of 1995, no persons are required to respond to a collection of information unless it displays valid OMB control number.

PETITION TO ACCEPT UNINTENTIONALLY DELAYED PAYMENT OF MAINTENANCE FEE IN AN EXPIRED PATENT (37 CFR 1.378(c))

Patent Number	Issue Date (YYYY-MM-DD)	Application Number	Filing Date (YYYY-MM-DD)	Docket Number (if applicable)
5,503,828	1996-04-02	08129089	1993-10-05	51-619

CAUTION: Maintenance fee (and surcharge, if any) payment must correctly identify: (1) the patent number and (2) the application number of the actual U.S. application leading to issuance of that patent to ensure the fee(s) is/are associated with the correct patent. 37 CFR 1.366(c) and (d).

SMALL ENTITY
☒ Patentee claims, or has previously claimed, small entity status. See 37 CFR 1.27.

LOSS OF ENTITLEMENT TO SMALL ENTITY STATUS
☐ Patentee is no longer entitled to small entity status. See 37 CFR 1.27(g)

NOT Small Entity			Small Entity		
	Fee	Code		Fee	Code
○	3 ½ year	(1551)	○	3 ½ year	(2551)
○	7 ½ year	(1552)	○	7 ½ year	(2552)
○	11 ½ year	(1553)	◉	11 ½ year	(2553)

SURCHARGE
The surcharge required by 37 CFR 1.20(i)(2) (Fee Code 1558) must be paid as a condition of accepting unintentionally delayed payment of the maintenance fee.

MAINTENANCE FEE (37 CFR 1.20(e)-(g))
The appropriate maintenance fee must be submitted with this petition.

STATEMENT
THE UNDERSIGNED CERTIFIES THAT THE DELAY IN PAYMENT OF THE MAINTENANCE FEE TO THIS PATENT WAS UNINTENTIONAL

PETITIONER(S) REQUEST THAT THE DELAYED PAYMENT OF THE MAINTENANCE FEE BE ACCEPTED AND THE PATENT REINSTATED

THIS PORTION MUST BE COMPLETED BY THE SIGNATORY OR SIGNATORIES

37 CFR 1.378(d) states: "Any petition under this section must be signed by an attorney or agent registered to practice before the Patent and Trademark Office, or by the patentee, the assignee, or other party in interest."

I certify, in accordance with 37 CFR 1.4(d)(4) that I am

◉ An attorney or agent registered to practice before the Patent and Trademark Office

○ A sole patentee

○ A joint patentee; I certify that I am authorized to sign this submission on behalf of all the other patentees.

○ A joint patentee; all of whom are signing this e-petition

○ The assignee of record of the entire interest

Patent Practitioner			
A signature of the applicant or representative is required in accordance with 37 CFR 1.33 and 10.18. Please see 37 CFR 1.4(d) for the form of the signature			
Signature	/Gary R. Tanigawa/	Date (YYYY-MM-DD)	2009-01-26
Name	Gary R. Tanigawa	Registration Number	43180

This collection of information is required by 37 CFR 1.378(c). The information is required to obtain or retain a benefit by the public which is to file (and by the USPTO to process) an application. Confidentiality is governed by 35 U.S.C. 122 and 37 CFR 1.11 and 1.14. This collection is estimated to take 1 hour to complete, including gathering, preparing, and submitting the completed application form to the USPTO. Time will vary depending upon the individual case. Any comments on the amount of time you require to complete this form and/ or suggestions for reducing this burden, should be sent to the Chief Information Officer, U.S. Patent and Trademark Office, U.S. Department of Commerce, P.O. Box 1450, Alexandria, VA 22313-1450. DO NOT SEND FEES OR COMPLETED FORMS TO THIS ADDRESS. **This form can only be used when in conjunction with EFS-Web. If this form is mailed to the USPTO, it may cause delays in reinstating the patent.**

Privacy Act Statement

The Privacy Act of 1974 (P.L. 93-579) requires that you be given certain information in connection with your submission of the attached form related to a patent application or patent. Accordingly, pursuant to the requirements of the Act, please be advised that: (1) the general authority for the collection of this information is 35 U.S.C. 2(b)(2); (2) furnishing of the information solicited is voluntary; and (3) the principal purpose for which the information is used by the U.S. Patent and Trademark Office is to process and/or examine your submission related to a patent application or patent. If you do not furnish the requested information, the U.S. Patent and Trademark Office may not be able to process and/or examine your submission, which may result in termination of proceedings or abandonment of the application or expiration of the patent.

The information provided by you in this form will be subject to the following routine uses:

1. The information on this form will be treated confidentially to the extent allowed under the Freedom of Information Act (5 U.S.C. 552) and the Privacy Act (5 U.S.C. 552a). Records from this system of records may be disclosed to the Department of Justice to determine whether the Freedom of Information Act requires disclosure of these record s.

2. A record from this system of records may be disclosed, as a routine use, in the course of presenting evidence to a court, magistrate, or administrative tribunal, including disclosures to opposing counsel in the course of settlement negotiations.

3. A record in this system of records may be disclosed, as a routine use, to a Member of Congress submitting a request involving an individual, to whom the record pertains, when the individual has requested assistance from the Member with respect to the subject matter of the record.

4. A record in this system of records may be disclosed, as a routine use, to a contractor of the Agency having need for the information in order to perform a contract. Recipients of information shall be required to comply with the requirements of the Privacy Act of 1974, as amended, pursuant to 5 U.S.C. 552a(m).

5. A record related to an International Application filed under the Patent Cooperation Treaty in this system of records may be disclosed, as a routine use, to the International Bureau of the World Intellectual Property Organization, pursuant to the Patent Cooperation Treaty.

6. A record in this system of records may be disclosed, as a routine use, to another federal agency for purposes of National Security review (35 U.S.C. 181) and for review pursuant to the Atomic Energy Act (42 U.S.C. 218(c)).

7. A record from this system of records may be disclosed, as a routine use, to the Administrator, General Services, or his/her designee, during an inspection of records conducted by GSA as part of that agency's responsibility to recommend improvements in records management practices and programs, under authority of 44 U.S.C. 2904 and 2906. Such disclosure shall be made in accordance with the GSA regulations governing inspection of records for this purpose, and any other relevant (i.e., GSA or Commerce) directive. Such disclosure shall not be used to make determinations about individuals.

8. A record from this system of records may be disclosed, as a routine use, to the public after either publication of the application pursuant to 35 U.S.C. 122(b) or issuance of a patent pursuant to 35 U.S.C. 151. Further, a record may be disclosed, subject to the limitations of 37 CFR 1.14, as a routine use, to the public if the record was filed in an application which became abandoned or in which the proceedings were terminated and which application is referenced by either a published application, an application open to public inspections or an issued patent.

9. A record from this system of records may be disclosed, as a routine use, to a Federal, State, or local law enforcement agency, if the USPTO becomes aware of a violation or potential violation of law or regulation.

Under the Paperwork Reduction Act of 1995, no persons are required to respond to a collection of information unless it displays valid OMB control number.

PETITION TO ACCEPT UNINTENTIONALLY DELAYED PAYMENT OF MAINTENANCE FEE IN AN EXPIRED PATENT (37 CFR 1.378(c))

Patent Number	Issue Date (YYYY-MM-DD)	Application Number	Filing Date (YYYY-MM-DD)	Docket Number (if applicable)
5,439,649	1995-08-08	08/129,243	1993-09-29	

CAUTION: Maintenance fee (and surcharge, if any) payment must correctly identify: (1) the patent number and (2) the application number of the actual U.S. application leading to issuance of that patent to ensure the fee(s) is/are associated with the correct patent. 37 CFR 1.366(c) and (d).

SMALL ENTITY
☐ Patentee claims, or has previously claimed, small entity status. See 37 CFR 1.27.

LOSS OF ENTITLEMENT TO SMALL ENTITY STATUS
☒ Patentee is no longer entitled to small entity status. See 37 CFR 1.27(g)

NOT Small Entity		Small Entity	
Fee	Code	Fee	Code
○ 3 ½ year	(1551)	○ 3 ½ year	(2551)
○ 7 ½ year	(1552)	○ 7 ½ year	(2552)
◉ 11 ½ year	(1553)	○ 11 ½ year	(2553)

SURCHARGE
The surcharge required by 37 CFR 1.20(i)(2) (Fee Code 1558) must be paid as a condition of accepting unintentionally delayed payment of the maintenance fee.

MAINTENANCE FEE (37 CFR 1.20(e)-(g))
The appropriate maintenance fee must be submitted with this petition.

STATEMENT
THE UNDERSIGNED CERTIFIES THAT THE DELAY IN PAYMENT OF THE MAINTENANCE FEE TO THIS PATENT WAS UNINTENTIONAL

PETITIONER(S) REQUEST THAT THE DELAYED PAYMENT OF THE MAINTENANCE FEE BE ACCEPTED AND THE PATENT REINSTATED

THIS PORTION MUST BE COMPLETED BY THE SIGNATORY OR SIGNATORIES

37 CFR 1.378(d) states: "Any petition under this section must be signed by an attorney or agent registered to practice before the Patent and Trademark Office, or by the patentee, the assignee, or other party in interest."

I certify, in accordance with 37 CFR 1.4(d)(4) that I am

◉ An attorney or agent registered to practice before the Patent and Trademark Office

○ A sole patentee

○ A joint patentee; I certify that I am authorized to sign this submission on behalf of all the other patentees.

○ A joint patentee; all of whom are signing this e-petition

○ The assignee of record of the entire interest

Patent Practitioner			
A signature of the applicant or representative is required in accordance with 37 CFR 1.33 and 10.18. Please see 37 CFR 1.4(d) for the form of the signature			
Signature	/Mary Jo Bertani/	Date (YYYY-MM-DD)	2008-02-23
Name	Mary Jo Bertani	Registration Number	42321

This collection of information is required by 37 CFR 1.378(c). The information is required to obtain or retain a benefit by the public which is to file (and by the USPTO to process) an application. Confidentiality is governed by 35 U.S.C. 122 and 37 CFR 1.11 and 1.14. This collection is estimated to take 1 hour to complete, including gathering, preparing, and submitting the completed application form to the USPTO. Time will vary depending upon the individual case. Any comments on the amount of time you require to complete this form and/ or suggestions for reducing this burden, should be sent to the Chief Information Officer, U.S. Patent and Trademark Office, U.S. Department of Commerce, P.O. Box 1450, Alexandria, VA 22313-1450. DO NOT SEND FEES OR COMPLETED FORMS TO THIS ADDRESS. **This form can only be used when in conjunction with EFS-Web. If this form is mailed to the USPTO, it may cause delays in reinstating the patent.**

Privacy Act Statement

The Privacy Act of 1974 (P.L. 93-579) requires that you be given certain information in connection with your submission of the attached form related to a patent application or patent. Accordingly, pursuant to the requirements of the Act, please be advised that: (1) the general authority for the collection of this information is 35 U.S.C. 2(b)(2); (2) furnishing of the information solicited is voluntary; and (3) the principal purpose for which the information is used by the U.S. Patent and Trademark Office is to process and/or examine your submission related to a patent application or patent. If you do not furnish the requested information, the U.S. Patent and Trademark Office may not be able to process and/or examine your submission, which may result in termination of proceedings or abandonment of the application or expiration of the patent.

The information provided by you in this form will be subject to the following routine uses:

1. The information on this form will be treated confidentially to the extent allowed under the Freedom of Information Act (5 U.S.C. 552) and the Privacy Act (5 U.S.C. 552a). Records from this system of records may be disclosed to the Department of Justice to determine whether the Freedom of Information Act requires disclosure of these record s.

2. A record from this system of records may be disclosed, as a routine use, in the course of presenting evidence to a court, magistrate, or administrative tribunal, including disclosures to opposing counsel in the course of settlement negotiations.

3. A record in this system of records may be disclosed, as a routine use, to a Member of Congress submitting a request involving an individual, to whom the record pertains, when the individual has requested assistance from the Member with respect to the subject matter of the record.

4. A record in this system of records may be disclosed, as a routine use, to a contractor of the Agency having need for the information in order to perform a contract. Recipients of information shall be required to comply with the requirements of the Privacy Act of 1974, as amended, pursuant to 5 U.S.C. 552a(m).

5. A record related to an International Application filed under the Patent Cooperation Treaty in this system of records may be disclosed, as a routine use, to the International Bureau of the World Intellectual Property Organization, pursuant to the Patent Cooperation Treaty.

6. A record in this system of records may be disclosed, as a routine use, to another federal agency for purposes of National Security review (35 U.S.C. 181) and for review pursuant to the Atomic Energy Act (42 U.S.C. 218(c)).

7. A record from this system of records may be disclosed, as a routine use, to the Administrator, General Services, or his/her designee, during an inspection of records conducted by GSA as part of that agency's responsibility to recommend improvements in records management practices and programs, under authority of 44 U.S.C. 2904 and 2906. Such disclosure shall be made in accordance with the GSA regulations governing inspection of records for this purpose, and any other relevant (i.e., GSA or Commerce) directive. Such disclosure shall not be used to make determinations about individuals.

8. A record from this system of records may be disclosed, as a routine use, to the public after either publication of the application pursuant to 35 U.S.C. 122(b) or issuance of a patent pursuant to 35 U.S.C. 151. Further, a record may be disclosed, subject to the limitations of 37 CFR 1.14, as a routine use, to the public if the record was filed in an application which became abandoned or in which the proceedings were terminated and which application is referenced by either a published application, an application open to public inspections or an issued patent.

9. A record from this system of records may be disclosed, as a routine use, to a Federal, State, or local law enforcement agency, if the USPTO becomes aware of a violation or potential violation of law or regulation.

UNITED STATES PATENT AND TRADEMARK OFFICE

Commissioner for Patents
United States Patent and Trademark Office
P.O. Box 1450
Alexandria, VA 22313-1450
www.uspto.gov

In re Patent No. 5439649
Issue Date: August 8,1995
Application No. 08129243
Filed: September 29,1993
Attorney Docket No. BIGE02700US

:
:DECISION GRANTING PETITION
:UNDER 37 CFR 1.378(c)
:

This is a decision on the electronic petition, filed February 22,2008 ,under 37 CFR 1.378(c) to accept the unintentionally delayed payment of the 11.5 year maintenance fee for the above-identified patent.

The petition is GRANTED.

The maintenance fee is accepted, and the above-identified patent reinstated as of February 22,2008 . This decision also constitutes notice that the fee has been accepted. An electronic copy of the petition and this decision has been created as an entry in an Image File Wrapper. Nevertheless, petitioner should print and retain an independent copy

Telephone inquires related to this electronic decision should be directed to the Electronic Business Center at 1-866-217-9197.

Under the Paperwork Reduction Act of 1995, no persons are required to respond to a collection of information unless it displays valid OMB control number.

PETITION TO ACCEPT UNINTENTIONALLY DELAYED PAYMENT OF MAINTENANCE FEE IN AN EXPIRED PATENT (37 CFR 1.378(c))

Patent Number	Issue Date (YYYY-MM-DD)	Application Number	Filing Date (YYYY-MM-DD)	Docket Number (if applicable)
5804187	1998-09-08	08129930	1993-09-30	SOMA1140-1

CAUTION: Maintenance fee (and surcharge, if any) payment must correctly identify: (1) the patent number and (2) the application number of the actual U.S. application leading to issuance of that patent to ensure the fee(s) is/are associated with the correct patent. 37 CFR 1.366(c) and (d).

SMALL ENTITY
☒ Patentee claims, or has previously claimed, small entity status. See 37 CFR 1.27.

LOSS OF ENTITLEMENT TO SMALL ENTITY STATUS
☐ Patentee is no longer entitled to small entity status. See 37 CFR 1.27(g)

NOT Small Entity		Small Entity	
Fee	Code	Fee	Code
○ 3 ½ year	(1551)	○ 3 ½ year	(2551)
○ 7 ½ year	(1552)	◉ 7 ½ year	(2552)
○ 11 ½ year	(1553)	○ 11 ½ year	(2553)

SURCHARGE
The surcharge required by 37 CFR 1.20(i)(2) (Fee Code 1558) must be paid as a condition of accepting unintentionally delayed payment of the maintenance fee.

MAINTENANCE FEE (37 CFR 1.20(e)-(g))
The appropriate maintenance fee must be submitted with this petition.

STATEMENT
THE UNDERSIGNED CERTIFIES THAT THE DELAY IN PAYMENT OF THE MAINTENANCE FEE TO THIS PATENT WAS UNINTENTIONAL

PETITIONER(S) REQUEST THAT THE DELAYED PAYMENT OF THE MAINTENANCE FEE BE ACCEPTED AND THE PATENT REINSTATED

THIS PORTION MUST BE COMPLETED BY THE SIGNATORY OR SIGNATORIES

37 CFR 1.378(d) states: "Any petition under this section must be signed by an attorney or agent registered to practice before the Patent and Trademark Office, or by the patentee, the assignee, or other party in interest."

I certify, in accordance with 37 CFR 1.4(d)(4) that I am

◉ An attorney or agent registered to practice before the Patent and Trademark Office

○ A sole patentee

○ A joint patentee; I certify that I am authorized to sign this submission on behalf of all the other patentees.

○ A joint patentee; all of whom are signing this e-petition

○ The assignee of record of the entire interest

Patent Practitioner			
A signature of the applicant or representative is required in accordance with 37 CFR 1.33 and 10.18. Please see 37 CFR 1.4(d) for the form of the signature			
Signature	/lah/	Date (YYYY-MM-DD)	2006-12-21
Name	Lisa A. Haile, J.D., Ph.D.	Registration Number	38347

This collection of information is required by 37 CFR 1.378(c). The information is required to obtain or retain a benefit by the public which is to file (and by the USPTO to process) an application. Confidentiality is governed by 35 U.S.C. 122 and 37 CFR 1.11 and 1.14. This collection is estimated to take 1 hour to complete, including gathering, preparing, and submitting the completed application form to the USPTO. Time will vary depending upon the individual case. Any comments on the amount of time you require to complete this form and/ or suggestions for reducing this burden, should be sent to the Chief Information Officer, U.S. Patent and Trademark Office, U.S. Department of Commerce, P.O. Box 1450, Alexandria, VA 22313-1450. DO NOT SEND FEES OR COMPLETED FORMS TO THIS ADDRESS. **This form can only be used when in conjunction with EFS-Web. If this form is mailed to the USPTO, it may cause delays in reinstating the patent.**

Privacy Act Statement

The Privacy Act of 1974 (P.L. 93-579) requires that you be given certain information in connection with your submission of the attached form related to a patent application or patent. Accordingly, pursuant to the requirements of the Act, please be advised that: (1) the general authority for the collection of this information is 35 U.S.C. 2(b)(2); (2) furnishing of the information solicited is voluntary; and (3) the principal purpose for which the information is used by the U.S. Patent and Trademark Office is to process and/or examine your submission related to a patent application or patent. If you do not furnish the requested information, the U.S. Patent and Trademark Office may not be able to process and/or examine your submission, which may result in termination of proceedings or abandonment of the application or expiration of the patent.

The information provided by you in this form will be subject to the following routine uses:

1. The information on this form will be treated confidentially to the extent allowed under the Freedom of Information Act (5 U.S.C. 552) and the Privacy Act (5 U.S.C. 552a). Records from this system of records may be disclosed to the Department of Justice to determine whether the Freedom of Information Act requires disclosure of these record s.

2. A record from this system of records may be disclosed, as a routine use, in the course of presenting evidence to a court, magistrate, or administrative tribunal, including disclosures to opposing counsel in the course of settlement negotiations.

3. A record in this system of records may be disclosed, as a routine use, to a Member of Congress submitting a request involving an individual, to whom the record pertains, when the individual has requested assistance from the Member with respect to the subject matter of the record.

4. A record in this system of records may be disclosed, as a routine use, to a contractor of the Agency having need for the information in order to perform a contract. Recipients of information shall be required to comply with the requirements of the Privacy Act of 1974, as amended, pursuant to 5 U.S.C. 552a(m).

5. A record related to an International Application filed under the Patent Cooperation Treaty in this system of records may be disclosed, as a routine use, to the International Bureau of the World Intellectual Property Organization, pursuant to the Patent Cooperation Treaty.

6. A record in this system of records may be disclosed, as a routine use, to another federal agency for purposes of National Security review (35 U.S.C. 181) and for review pursuant to the Atomic Energy Act (42 U.S.C. 218(c)).

7. A record from this system of records may be disclosed, as a routine use, to the Administrator, General Services, or his/her designee, during an inspection of records conducted by GSA as part of that agency's responsibility to recommend improvements in records management practices and programs, under authority of 44 U.S.C. 2904 and 2906. Such disclosure shall be made in accordance with the GSA regulations governing inspection of records for this purpose, and any other relevant (i.e., GSA or Commerce) directive. Such disclosure shall not be used to make determinations about individuals.

8. A record from this system of records may be disclosed, as a routine use, to the public after either publication of the application pursuant to 35 U.S.C. 122(b) or issuance of a patent pursuant to 35 U.S.C. 151. Further, a record may be disclosed, subject to the limitations of 37 CFR 1.14, as a routine use, to the public if the record was filed in an application which became abandoned or in which the proceedings were terminated and which application is referenced by either a published application, an application open to public inspections or an issued patent.

9. A record from this system of records may be disclosed, as a routine use, to a Federal, State, or local law enforcement agency, if the USPTO becomes aware of a violation or potential violation of law or regulation.

UNITED STATES PATENT AND TRADEMARK OFFICE

Commissioner for Patents
United States Patent and Trademark Office
P.O. Box 1450
Alexandria, VA 22313-1450
www.uspto.gov

In re Patent No. 5804187
Issue Date: September 8,1998
Application No. 08129930
Filed: September 30,1993
Attorney Docket No. CRFCC008A

:
:DECISION GRANTING PETITION
:UNDER 37 CFR 1.378(c)
:

This is a decision on the electronic petition, filed December 21,2006 ,under 37 CFR 1.378(c) to accept the unintentionally delayed payment of the 7.5 year maintenance fee for the above-identified patent.

The petition is GRANTED.

The maintenance fee is accepted, and the above-identified patent reinstated as of December 21,2006. This decision also constitutes notice that the fee has been accepted. An electronic copy of the petition and this decision has been created as an entry in an Image File Wrapper. Nevertheless, petitioner should print and retain an independent copy

Telephone inquires related to this electronic decision should be directed to the Electronic Business Center at 1-866-217-9197.

UNITED STATES PATENT AND TRADEMARK OFFICE

Commissioner for Patents
United States Patent and Trademark Office
P.O. Box 1450
Alexandria, VA 22313-1450
www.uspto.gov

MAR 10 2005

CONNOLLY BOVE LODGE & HUTZ LLP
1990 M Street N.W. Suite 800
Washington DC 20036-3425

In re Application of
Eliezer Rapaport
Serial No. : 08/131,948
Filed : 8 October 1993
Attorney Dkt No. : 21095-00004-US

Decision on Petition

This letter is in response to the Petition under 37 C.F.R. 1.181, filed on 2 July 2004, to request that Claims 25-48, 50 and 64-72 be reinstated and joined and acted upon along with the claims that are on appeal in this case. The delay in acting on this petition is regretted.

BACKGROUND

A review of the file history shows that the application was filed on October 8, 1993 with 17 claims drawn to methods for treating HIV/AIDS by administering a mixture of adenosine and inorganic phosphate and/or an adenine nucleotide which undergoes rapid degradation to adenosine and inorganic phosphate after administration to said host.

A first action on the merits was sent to applicants on February 2 1994. Following a final rejection on August 15 1994, an appeal brief was filed on February 14 1995, arguing applicants' position on a 112 first paragraph rejection based on a lack of enablement, obvious type double patenting and a rejection

under 103 on claims 1-24. On September 27, 2000 a Decision from the Board of Appeals was sent to applicants in which the Board of Appeals reversed the previous examiner's rejections of claims 1-24 under 35 U.S.C. 112, first paragraph and 35 U.S.C. 103. However, the Board provided new grounds of rejection of claims 1-24 under 37 CFR 1.196(b) over the combination of Rapaport and Hoffman AIDS.

The appellants responded to this new grounds of rejection by requesting the cancellation of the appealed claims 1-24 and by requesting the addition of new claims 25-48. In response to appellants' amendment of the claims the examiner sent appellants a communication on 6/28/2002 in which appellants were told that the newly added claims "are not in fact directed to the same subject matter as the appealed claims." The newly proposed claims recite methods with a preamble for suppressing TNF-alpha and IL-6 synthesis and/or for improving gut absorptive capacity and the integrity of the intestinal mucosa and /or for reversing cachexia-wasting and/or improving organ function, however the active steps in the methods remained the same as those originally filed.

The examiner stated that the newly proposed claims would require further search and consideration of the newly claimed "activities" as the suppression of TNF-alpha and IL-6 synthesis, and/or improvement of gut absorptive capacity and the integrity of the intestinal mucosa and/or the reversal of cachexia-wasting, and/or improvement of organ function represent "activities" related to numerous other diseases. As such the examiner noted that the appellant's claims are separately patentable from the appealed claims. Since appealed claims 1-24

had been canceled, no claims corresponding to the elected and appealed subject matter were pending in the application and appellant was given one month to correct the claimed subject matter.

On July 26, 2002, appellants submitted an amendment asking that claims 25-48 be reinstated and adding new claims 49-72. On October 21, 2002, the examiner sent applicants a final rejection in which the examiner applied the Board's previous rejection of canceled claims 1-24 over Rapaport and Hoffman AIDS to new claims 49 and 51-63 and withdrew claims 25-48, 50 and 64-72 as not being drawn to the same subject matter recited in the previously appealed claims 1-24.

DISCUSSION

Applicants' petition under 37 C.F.R. 1.144, to request that claims 25-48, 50 and 64-72 be reinstated and joined and acted upon along with the claims that are on appeal in this case is herein discussed.

Claim 25 (with claims 26-39 dependent on) is drawn to methods for suppressing TNF-alpha and IL-6 synthesis and/or for improving gut absorptive capacity and the integrity of the intestinal mucosa and /or for reversing cachexia-wasting and/or improving organ function, by administering to a human host in need thereof a member selected from the group consisting of: (a) a mixture of adenosine and inorganic phosphate; (b) an adenine nucleotide wherein said adenine nucleotide containing adenosine moiety(ies) and phosphate moiety(ies) and undergoes rapid degradation to adenosine and inorganic phosphate after administration to said host; and mixtures thereof.

Claim 40 (with claims 41-48 dependent on) and claim 64 (with claims 65-72 dependent form) are drawn to a process for suppressing TNF-alpha and IL-6 synthesis and/or for improving gut absorptive capacity and the integrity of the intestinal mucosa and /or for treating (claim 40) or reversing (claim 64) cachexia-wasting and/or improving organ function, by increasing organ, blood and blood plasma levels of adenosine 5'-triphosphate in said host.

Claim 49 (with 50-72 dependent on) to which the examiner applied the rejection under 37 CFR 1.196(b) over Rapaport and Hoffman AIDS to is drawn to a methods for suppressing TNF-alpha and IL-6 synthesis and/or for improving gut absorptive capacity and the integrity of the intestinal mucosa and /or for reversing cachexia-wasting and/or improving organ function, by administering to a human host suffering from HIV Disease/AIDS and/or advanced disease a member selected from the group consisting of: (a) a mixture of adenosine and inorganic phosphate; (b) an adenine nucleotide wherein said adenine nucleotide containing adenosine moiety(ies) and phosphate moiety(ies) and undergoes rapid degradation to adenosine and inorganic phosphate after administration to said host; and mixtures thereof.

As claims 25 (claims 26-39 dependent on), 40 (claims 41-48 dependent on) and 64 (claims 65-72 dependent on) are each drawn to methods comprising the same (claim 25) or broader (claims 40 and 64) active steps as claim 49 (claims 50-72 dependent on) now being prosecuted. The methods of claim 25 comprise "administering to a human host in need thereof", whereas the methods of claim 49 comprise "administering to a human host suffering from HIV

Disease/AIDS and/or advanced disease". In both claims, the mixture which is administered is the same. The method of claim 40 does not comprise a specifically recited step of who is to be treated, but by virtue of the fact that it is drawn to a process for treating a human host in need thereof and results in the outcome, "increasing organ, blood and blood plasma levels of adenosine 5'triphosphate in said host" presumably it is a process of affecting a human host in need thereof.

Further it is noted that claim 50 which the examiner previously withdrew as not being drawn to the subject matter under appeal, is drawn to the method of claim 49, which is currently being prosecuted, with the further limitation that the "adenine nucleotides are administered to a human host as pharmaceutically acceptable salts thereof, or chelates thereof, or metal complexes thereof, or liposomes thereof". It is noted that original claims 2 and 18 each further limited the claims from which they depended such that they recited "adenine nucleotides are administered to a host as pharmaceutically acceptable salts thereof, or chelates thereof, or metal complexes thereof, or liposomes thereof" (claim 2) or "adenine nucleotides are administered to a host as pharmaceutically acceptable salts thereof, or chelates thereof, or metal complexes thereof, or preparations containing liposomes thereof" (claim 18). It is noted that claim 2 and 18 have both been examined by the Office.

MPEP 1214.01 provides the procedures for amendment entry following new grounds of rejection by the Board. Amendments submitted in response to a rejection under 37 CFR 1.196(b) are "appropriate" if they are directed to the

same subject matter as the appealed claims. *Ex parte Comstock*, 317 O.G. 4, 1923 C.D. 82 (Comm'r Pat. 1923). In this case, by entry and examination of the claim 49, the Office has treated claim 49 as if it is of the same subject matter as that appealed to the Board. Claim 49 requires administration of the same mixtures of that required by the appealed claims. Claim 25 is also directed to administration of the same mixtures as claim 49. As such, withdrawn claims 25-48, 50 and 64-72 are of comparable and overlapping scope to those which had been under appeal and with claims 49 and 51-63.

DECISION

For these reasons, the Petition under 37 C.F.R. 1.181 to request that claims 25-48, 50 and 64-72 be reinstated and joined and acted upon along with the claims that are on appeal in this case is herein is **GRANTED.**

The application will be forwarded to the examiner to consider applicants' response filed to the previous notice of non-compliant brief.

Should there be any questions regarding this decision, please contact Special Program Examiner Julie Burke, by mail addressed to Director, Technology Center 1600, PO BOX 1450, ALEXANDRIA, VA 22313-1450, or by telephone at (571) 272-1600 or by Official Fax at 703-872-9306.

Jasemine C. Chambers

Jasemine Chambers

Director, Technology Center 1600.

Under the Paperwork Reduction Act of 1995, no persons are required to respond to a collection of information unless it displays valid OMB control number.

PETITION TO ACCEPT UNINTENTIONALLY DELAYED PAYMENT OF MAINTENANCE FEE IN AN EXPIRED PATENT (37 CFR 1.378(c))

Patent Number	Issue Date (YYYY-MM-DD)	Application Number	Filing Date (YYYY-MM-DD)	Docket Number (if applicable)
5334185	1994-08-02	08132118	1993-10-05	4266-002

CAUTION: Maintenance fee (and surcharge, if any) payment must correctly identify: (1) the patent number and (2) the application number of the actual U.S. application leading to issuance of that patent to ensure the fee(s) is/are associated with the correct patent. 37 CFR 1.366(c) and (d).

SMALL ENTITY
☐ Patentee claims, or has previously claimed, small entity status. See 37 CFR 1.27.

LOSS OF ENTITLEMENT TO SMALL ENTITY STATUS
☐ Patentee is no longer entitled to small entity status. See 37 CFR 1.27(g)

NOT Small Entity			Small Entity		
	Fee	Code		Fee	Code
○	3 ½ year	(1551)	○	3 ½ year	(2551)
○	7 ½ year	(1552)	○	7 ½ year	(2552)
◉	11 ½ year	(1553)	○	11 ½ year	(2553)

SURCHARGE
The surcharge required by 37 CFR 1.20(i)(2) (Fee Code 1558) must be paid as a condition of accepting unintentionally delayed payment of the maintenance fee.

MAINTENANCE FEE (37 CFR 1.20(e)-(g))
The appropriate maintenance fee must be submitted with this petition.

STATEMENT
THE UNDERSIGNED CERTIFIES THAT THE DELAY IN PAYMENT OF THE MAINTENANCE FEE TO THIS PATENT WAS UNINTENTIONAL

PETITIONER(S) REQUEST THAT THE DELAYED PAYMENT OF THE MAINTENANCE FEE BE ACCEPTED AND THE PATENT REINSTATED

THIS PORTION MUST BE COMPLETED BY THE SIGNATORY OR SIGNATORIES

37 CFR 1.378(d) states: "Any petition under this section must be signed by an attorney or agent registered to practice before the Patent and Trademark Office, or by the patentee, the assignee, or other party in interest."

I certify, in accordance with 37 CFR 1.4(d)(4) that I am

◉ An attorney or agent registered to practice before the Patent and Trademark Office

○ A sole patentee

○ A joint patentee; I certify that I am authorized to sign this submission on behalf of all the other patentees.

○ A joint patentee; all of whom are signing this e-petition

○ The assignee of record of the entire interest

Patent Practitioner			
A signature of the applicant or representative is required in accordance with 37 CFR 1.33 and 10.18. Please see 37 CFR 1.4(d) for the form of the signature			
Signature	/Derek Meeker/	Date (YYYY-MM-DD)	2008-05-05
Name	Derek Meeker	Registration Number	53313

This collection of information is required by 37 CFR 1.378(c). The information is required to obtain or retain a benefit by the public which is to file (and by the USPTO to process) an application. Confidentiality is governed by 35 U.S.C. 122 and 37 CFR 1.11 and 1.14. This collection is estimated to take 1 hour to complete, including gathering, preparing, and submitting the completed application form to the USPTO. Time will vary depending upon the individual case. Any comments on the amount of time you require to complete this form and/ or suggestions for reducing this burden, should be sent to the Chief Information Officer, U.S. Patent and Trademark Office, U.S. Department of Commerce, P.O. Box 1450, Alexandria, VA 22313-1450. DO NOT SEND FEES OR COMPLETED FORMS TO THIS ADDRESS. **This form can only be used when in conjunction with EFS-Web. If this form is mailed to the USPTO, it may cause delays in reinstating the patent.**

Privacy Act Statement

The Privacy Act of 1974 (P.L. 93-579) requires that you be given certain information in connection with your submission of the attached form related to a patent application or patent. Accordingly, pursuant to the requirements of the Act, please be advised that: (1) the general authority for the collection of this information is 35 U.S.C. 2(b)(2); (2) furnishing of the information solicited is voluntary; and (3) the principal purpose for which the information is used by the U.S. Patent and Trademark Office is to process and/or examine your submission related to a patent application or patent. If you do not furnish the requested information, the U.S. Patent and Trademark Office may not be able to process and/or examine your submission, which may result in termination of proceedings or abandonment of the application or expiration of the patent.

The information provided by you in this form will be subject to the following routine uses:

1. The information on this form will be treated confidentially to the extent allowed under the Freedom of Information Act (5 U.S.C. 552) and the Privacy Act (5 U.S.C. 552a). Records from this system of records may be disclosed to the Department of Justice to determine whether the Freedom of Information Act requires disclosure of these record s.

2. A record from this system of records may be disclosed, as a routine use, in the course of presenting evidence to a court, magistrate, or administrative tribunal, including disclosures to opposing counsel in the course of settlement negotiations.

3. A record in this system of records may be disclosed, as a routine use, to a Member of Congress submitting a request involving an individual, to whom the record pertains, when the individual has requested assistance from the Member with respect to the subject matter of the record.

4. A record in this system of records may be disclosed, as a routine use, to a contractor of the Agency having need for the information in order to perform a contract. Recipients of information shall be required to comply with the requirements of the Privacy Act of 1974, as amended, pursuant to 5 U.S.C. 552a(m).

5. A record related to an International Application filed under the Patent Cooperation Treaty in this system of records may be disclosed, as a routine use, to the International Bureau of the World Intellectual Property Organization, pursuant to the Patent Cooperation Treaty.

6. A record in this system of records may be disclosed, as a routine use, to another federal agency for purposes of National Security review (35 U.S.C. 181) and for review pursuant to the Atomic Energy Act (42 U.S.C. 218(c)).

7. A record from this system of records may be disclosed, as a routine use, to the Administrator, General Services, or his/her designee, during an inspection of records conducted by GSA as part of that agency's responsibility to recommend improvements in records management practices and programs, under authority of 44 U.S.C. 2904 and 2906. Such disclosure shall be made in accordance with the GSA regulations governing inspection of records for this purpose, and any other relevant (i.e., GSA or Commerce) directive. Such disclosure shall not be used to make determinations about individuals.

8. A record from this system of records may be disclosed, as a routine use, to the public after either publication of the application pursuant to 35 U.S.C. 122(b) or issuance of a patent pursuant to 35 U.S.C. 151. Further, a record may be disclosed, subject to the limitations of 37 CFR 1.14, as a routine use, to the public if the record was filed in an application which became abandoned or in which the proceedings were terminated and which application is referenced by either a published application, an application open to public inspections or an issued patent.

9. A record from this system of records may be disclosed, as a routine use, to a Federal, State, or local law enforcement agency, if the USPTO becomes aware of a violation or potential violation of law or regulation.

UNITED STATES PATENT AND TRADEMARK OFFICE

Commissioner for Patents
United States Patent and Trademark Office
P.O. Box 1450
Alexandria, VA 22313-1450
www.uspto.gov

In re Patent No. 5334185
Issue Date: August 2,1994
Application No. 08132118
Filed: October 5,1993
Attorney Docket No. 11181489

:
:DECISION GRANTING PETITION
:UNDER 37 CFR 1.378(c)
:

This is a decision on the electronic petition, filed May 5,2008 ,under 37 CFR 1.378(c) to accept the unintentionally delayed payment of the 11.5 year maintenance fee for the above-identified patent.

The petition is GRANTED.

The maintenance fee is accepted, and the above-identified patent reinstated as of May 5,2008 . This decision also constitutes notice that the fee has been accepted. An electronic copy of the petition and this decision has been created as an entry in an Image File Wrapper. Nevertheless, petitioner should print and retain an independent copy

Telephone inquires related to this electronic decision should be directed to the Electronic Business Center at 1-866-217-9197.

PTO/SB/66 (03-09)
Approved for use through 03/31/2012. OMB 0651-0016
U.S. Patent and Trademark Office: U.S. DEPARTMENT OF COMMERCE
Under the Paperwork Reduction Act of 1995, no persons are required to respond to a collection of information unless it displays valid OMB control number.

PETITION TO ACCEPT UNINTENTIONALLY DELAYED PAYMENT OF MAINTENANCE FEE IN AN EXPIRED PATENT (37 CFR 1.378(c))

Patent Number	Issue Date (YYYY-MM-DD)	Application Number	Filing Date (YYYY-MM-DD)	Docket Number (if applicable)
5,479,949	1996-01-02	08/133,048	1993-10-12	

CAUTION: Maintenance fee (and surcharge, if any) payment must correctly identify: (1) the patent number and (2) the application number of the actual U.S. application leading to issuance of that patent to ensure the fee(s) is/are associated with the correct patent. 37 CFR 1.366(c) and (d).

SMALL ENTITY

☐ Patentee claims, or has previously claimed, small entity status. See 37 CFR 1.27.

LOSS OF ENTITLEMENT TO SMALL ENTITY STATUS

☐ Patentee is no longer entitled to small entity status. See 37 CFR 1.27(g)

NOT Small Entity			Small Entity		
	Fee	Code		Fee	Code
○	3 ½ year	(1551)	○	3 ½ year	(2551)
○	7 ½ year	(1552)	○	7 ½ year	(2552)
◉	11 ½ year	(1553)	○	11 ½ year	(2553)

SURCHARGE

The surcharge required by 37 CFR 1.20(i)(2) (Fee Code 1558) must be paid as a condition of accepting unintentionally delayed payment of the maintenance fee.

MAINTENANCE FEE (37 CFR 1.20(e)-(g))

The appropriate maintenance fee must be submitted with this petition.

STATEMENT

THE UNDERSIGNED CERTIFIES THAT THE DELAY IN PAYMENT OF THE MAINTENANCE FEE TO THIS PATENT WAS UNINTENTIONAL

PETITIONER(S) REQUEST THAT THE DELAYED PAYMENT OF THE MAINTENANCE FEE BE ACCEPTED AND THE PATENT REINSTATED

THIS PORTION MUST BE COMPLETED BY THE SIGNATORY OR SIGNATORIES

37 CFR 1.378(d) states: "Any petition under this section must be signed by an attorney or agent registered to practice before the Patent and Trademark Office, or by the patentee, the assignee, or other party in interest."

I certify, in accordance with 37 CFR 1.4(d)(4) that I am

◉ An attorney or agent registered to practice before the Patent and Trademark Office

○ A sole patentee

○ A joint patentee; I certify that I am authorized to sign this submission on behalf of all the other patentees.

○ A joint patentee; all of whom are signing this e-petition

○ The assignee of record of the entire interest

Patent Practitioner			
A signature of the applicant or representative is required in accordance with 37 CFR 1.33 and 10.18. Please see 37 CFR 1.4(d) for the form of the signature			
Signature	/Jeffrey A. Wyand/	Date (YYYY-MM-DD)	2009-05-29
Name	Jeffrey A. Wyand	Registration Number	29458

This collection of information is required by 37 CFR 1.378(c). The information is required to obtain or retain a benefit by the public which is to file (and by the USPTO to process) an application. Confidentiality is governed by 35 U.S.C. 122 and 37 CFR 1.11 and 1.14. This collection is estimated to take 1 hour to complete, including gathering, preparing, and submitting the completed application form to the USPTO. Time will vary depending upon the individual case. Any comments on the amount of time you require to complete this form and/ or suggestions for reducing this burden, should be sent to the Chief Information Officer, U.S. Patent and Trademark Office, U.S. Department of Commerce, P.O. Box 1450, Alexandria, VA 22313-1450. DO NOT SEND FEES OR COMPLETED FORMS TO THIS ADDRESS. **This form can only be used when in conjunction with EFS-Web. If this form is mailed to the USPTO, it may cause delays in reinstating the patent.**

Privacy Act Statement

The Privacy Act of 1974 (P.L. 93-579) requires that you be given certain information in connection with your submission of the attached form related to a patent application or patent. Accordingly, pursuant to the requirements of the Act, please be advised that: (1) the general authority for the collection of this information is 35 U.S.C. 2(b)(2); (2) furnishing of the information solicited is voluntary; and (3) the principal purpose for which the information is used by the U.S. Patent and Trademark Office is to process and/or examine your submission related to a patent application or patent. If you do not furnish the requested information, the U.S. Patent and Trademark Office may not be able to process and/or examine your submission, which may result in termination of proceedings or abandonment of the application or expiration of the patent.

The information provided by you in this form will be subject to the following routine uses:

1. The information on this form will be treated confidentially to the extent allowed under the Freedom of Information Act (5 U.S.C. 552) and the Privacy Act (5 U.S.C. 552a). Records from this system of records may be disclosed to the Department of Justice to determine whether the Freedom of Information Act requires disclosure of these records.

2. A record from this system of records may be disclosed, as a routine use, in the course of presenting evidence to a court, magistrate, or administrative tribunal, including disclosures to opposing counsel in the course of settlement negotiations.

3. A record in this system of records may be disclosed, as a routine use, to a Member of Congress submitting a request involving an individual, to whom the record pertains, when the individual has requested assistance from the Member with respect to the subject matter of the record.

4. A record in this system of records may be disclosed, as a routine use, to a contractor of the Agency having need for the information in order to perform a contract. Recipients of information shall be required to comply with the requirements of the Privacy Act of 1974, as amended, pursuant to 5 U.S.C. 552a(m).

5. A record related to an International Application filed under the Patent Cooperation Treaty in this system of records may be disclosed, as a routine use, to the International Bureau of the World Intellectual Property Organization, pursuant to the Patent Cooperation Treaty.

6. A record in this system of records may be disclosed, as a routine use, to another federal agency for purposes of National Security review (35 U.S.C. 181) and for review pursuant to the Atomic Energy Act (42 U.S.C. 218(c)).

7. A record from this system of records may be disclosed, as a routine use, to the Administrator, General Services, or his/her designee, during an inspection of records conducted by GSA as part of that agency's responsibility to recommend improvements in records management practices and programs, under authority of 44 U.S.C. 2904 and 2906. Such disclosure shall be made in accordance with the GSA regulations governing inspection of records for this purpose, and any other relevant (i.e., GSA or Commerce) directive. Such disclosure shall not be used to make determinations about individuals.

8. A record from this system of records may be disclosed, as a routine use, to the public after either publication of the application pursuant to 35 U.S.C. 122(b) or issuance of a patent pursuant to 35 U.S.C. 151. Further, a record may be disclosed, subject to the limitations of 37 CFR 1.14, as a routine use, to the public if the record was filed in an application which became abandoned or in which the proceedings were terminated and which application is referenced by either a published application, an application open to public inspections or an issued patent.

9. A record from this system of records may be disclosed, as a routine use, to a Federal, State, or local law enforcement agency, if the USPTO becomes aware of a violation or potential violation of law or regulation.

UNITED STATES PATENT AND TRADEMARK OFFICE

Commissioner for Patents
United States Patent and Trademark Office
P.O. Box 1450
Alexandria, VA 22313-1450
www.uspto.gov

In re Patent No. 5479949
Issue Date: January 2,1996
Application No. 08133048
Filed: October 12,1993
Attorney Docket No.

:
:DECISION GRANTING PETITION
:UNDER 37 CFR 1.378(c)
:

This is a decision on the electronic petition, filed May 29,2009 ,under 37 CFR 1.378(c) to accept the unintentionally delayed payment of the 11.5 year maintenance fee for the above-identified patent.

The petition is **GRANTED**.

The maintenance fee is accepted, and the above-identified patent reinstated as of May 29,2009 .
This decision also constitutes notice that the fee has been accepted. An electronic copy of the petition and this decision has been created as an entry in the Image File Wrapper. Nevertheless, petitioner should print and retain an independent copy.

Telephone inquiries related to this electronic decision should be directed to the Electronic Business Center at 1-866-217-9197.

UNITED STATES PATENT AND TRADEMARK OFFICE

Commissioner for Patents
United States Patent and Trademark Office
P.O. Box 1450
Alexandria, VA 22313-1450
www.uspto.gov

HERSHKOVITZ & ASSOCIATES
2845 DUKE STREET
ALEXANDRIA, VA 22314

COPY MAILED

APR 0 4 2007

OFFICE OF PETITIONS

In re Patent No. 5,367,627	:	
Issue Date: November 22, 1994	:	
Application No. 08/133,986	:	DECISION ON PETITION
Filed: October 12, 1993	:	
Attorney Docket No. 014-002-03-US	:	

This is a decision on the petitions under 37 CFR 1.182, filed March 13, 2007 and March 20, 2007, requesting (1) issuance of a duplicate Letters Patent for the above-identified patent, (2) for expedited consideration of the petition for duplicate Letters Patent, and (3) for expedited consideration of a request for a certificate of correction.

The petitions are **GRANTED**.

The Publishing Division is directed to issue a duplicate Letters Patent.

The Certificates of Correction Branch has been notified of this decision so that expedited consideration may be given to the request for a certificate of correction to correct the filing date to November 10, 1989, in prior-filed Application No. 07/435,809, as noted in a decision mailed February 22, 2007 granting the petition under 37 CFR 1.10(c).

Telephone inquiries concerning this decision may be directed to the undersigned at (571) 272-3218. Inquiries regarding the issuance of a duplicate Letters Patent may be directed Krystal Paige in the Publishing Division at (703) 308-9250, Ext. 139.

A copy of this decision is being faxed to Publishing Division for issuance of a duplicate Letters Patent.

Frances Hicks
Frances Hicks
Petitions Examiner
Office of Petitions

cc: Krystal Paige, South Tower, 8th Floor (Fax No. (571) 270-9937

UNITED STATES PATENT AND TRADEMARK OFFICE

COMMISSIONER FOR PATENTS
UNITED STATES PATENT AND TRADEMARK OFFICE
P.O. BOX 1450
ALEXANDRIA, VA 22313-1450
www.uspto.gov

HERSHKOVITZ & ASSOCIATES
2845 DUKE STREET
ALEXANDRIA, VA 22314

COPY MAILED

SEP 26 2007

OFFICE OF PETITIONS

In re Patent No. 5,367,627 :
Issue Date: November 22, 1994 :
Application No. 08/133,986 :
Filed: October 2, 1993 :
Patentee(s): Jerome D. Johnson :

NOTICE

This is a notice regarding your request for acceptance of a fee deficiency submission under 37 CFR 1.28, filed on April 17, 2007. On September 1, 1998, the Court of Appeals for the Federal Circuit held that 37 CFR 1.28(c) is the sole provision governing the time for correction of the erroneous payment of the issue fee as a small entity. **See DH Technology v. Synergystex International, Inc. 154 F.3d 1333, 47 USPQ2d 1865 (Fed. Cir. Sept. 1, 1998).**

The Office no longer investigates or rejects original or reissue applications under 37 CFR 1.56. **1098 Off. Gaz. Pat. Office 502 (January 3, 1989).** Therefore, nothing in this Notice is intended to imply that an investigation was done.

Your fee deficiency submission under 37 CFR 1.28 is hereby **ACCEPTED**. Therefore, status as a small entity has been removed.

The Revocation of Power of Attorney with New Power of Attorney and Change of Correspondence Address filed on April 17, 2007, has been acknowledged.

Inquiries related to this communication should be directed to the undersigned at (571) 272-3226.

Andrea Smith
Petitions Examiner
Office of Petitions

UNITED STATES PATENT AND TRADEMARK OFFICE

Commissioner for Patents
United States Patent and Trademark Office
P.O. Box 1450
Alexandria, VA 22313-1450
www.uspto.gov

Hershkovitz & Associates, LLC
2845 Duke Street
Alexandria, VA 22314

COPY MAILED

AUG 04 2008

In re Patent No. 5,367,627	:	
Issue Date: November 22, 1994	:	
Application No. 08/133,986	:	ON PETITION
Filed: October 12, 1993	:	
Attorney Docket No. P62319	:	

This is a decision on the petition under 37 CFR 1.182, filed May 16, 2008, requesting issuance of a duplicate Letters Patent for the above-identified patent.

The petition is granted.

The Office of Data Management is directed to issue duplicate Letters Patent.

A copy of this decision is being forwarded to the Office of Data Management for issuance of the duplicate Letters Patent.

The patent file is being referred to the Files Repository.

Any questions concerning this matter may be directed to the undersigned at (571) 272-3226. Any questions concerning issuance of the duplicate Letters Patent should be directed to Niomi Farmer at (703) 308-9250 ext 119.

Andrea Smith
Petitions Examiner
Office of Petitions

cc: Niomi Farmer, P/OPPD, South Tower 8th Floor, Room C23
FAX No. (571) 270-9753

Under the Paperwork Reduction Act of 1995, no persons are required to respond to a collection of information unless it displays valid OMB control number.

PETITION TO ACCEPT UNINTENTIONALLY DELAYED PAYMENT OF MAINTENANCE FEE IN AN EXPIRED PATENT (37 CFR 1.378(c))

Patent Number	Issue Date (YYYY-MM-DD)	Application Number	Filing Date (YYYY-MM-DD)	Docket Number (if applicable)
5429819	1995-07-04	08134124	1993-10-08	ID 054407

CAUTION: Maintenance fee (and surcharge, if any) payment must correctly identify: (1) the patent number and (2) the application number of the actual U.S. application leading to issuance of that patent to ensure the fee(s) is/are associated with the correct patent. 37 CFR 1.366(c) and (d).

SMALL ENTITY
☐ Patentee claims, or has previously claimed, small entity status. See 37 CFR 1.27.

LOSS OF ENTITLEMENT TO SMALL ENTITY STATUS
☐ Patentee is no longer entitled to small entity status. See 37 CFR 1.27(g)

NOT Small Entity			Small Entity		
	Fee	Code		Fee	Code
○	3 ½ year	(1551)	○	3 ½ year	(2551)
○	7 ½ year	(1552)	○	7 ½ year	(2552)
◉	11 ½ year	(1553)	○	11 ½ year	(2553)

SURCHARGE
The surcharge required by 37 CFR 1.20(i)(2) (Fee Code 1558) must be paid as a condition of accepting unintentionally delayed payment of the maintenance fee.

MAINTENANCE FEE (37 CFR 1.20(e)-(g))
The appropriate maintenance fee must be submitted with this petition.

STATEMENT
THE UNDERSIGNED CERTIFIES THAT THE DELAY IN PAYMENT OF THE MAINTENANCE FEE TO THIS PATENT WAS UNINTENTIONAL

PETITIONER(S) REQUEST THAT THE DELAYED PAYMENT OF THE MAINTENANCE FEE BE ACCEPTED AND THE PATENT REINSTATED

THIS PORTION MUST BE COMPLETED BY THE SIGNATORY OR SIGNATORIES

37 CFR 1.378(d) states: "Any petition under this section must be signed by an attorney or agent registered to practice before the Patent and Trademark Office, or by the patentee, the assignee, or other party in interest."

I certify, in accordance with 37 CFR 1.4(d)(4) that I am

◉ An attorney or agent registered to practice before the Patent and Trademark Office

○ A sole patentee

○ A joint patentee; I certify that I am authorized to sign this submission on behalf of all the other patentees.

○ A joint patentee; all of whom are signing this e-petition

○ The assignee of record of the entire interest

Patent Practitioner			
A signature of the applicant or representative is required in accordance with 37 CFR 1.33 and 10.18. Please see 37 CFR 1.4(d) for the form of the signature			
Signature	/DJCushing/	Date (YYYY-MM-DD)	2007-11-12
Name	David J. Cushing	Registration Number	28703

This collection of information is required by 37 CFR 1.378(c). The information is required to obtain or retain a benefit by the public which is to file (and by the USPTO to process) an application. Confidentiality is governed by 35 U.S.C. 122 and 37 CFR 1.11 and 1.14. This collection is estimated to take 1 hour to complete, including gathering, preparing, and submitting the completed application form to the USPTO. Time will vary depending upon the individual case. Any comments on the amount of time you require to complete this form and/ or suggestions for reducing this burden, should be sent to the Chief Information Officer, U.S. Patent and Trademark Office, U.S. Department of Commerce, P.O. Box 1450, Alexandria, VA 22313-1450. DO NOT SEND FEES OR COMPLETED FORMS TO THIS ADDRESS. **This form can only be used when in conjunction with EFS-Web. If this form is mailed to the USPTO, it may cause delays in reinstating the patent.**

Privacy Act Statement

The Privacy Act of 1974 (P.L. 93-579) requires that you be given certain information in connection with your submission of the attached form related to a patent application or patent. Accordingly, pursuant to the requirements of the Act, please be advised that: (1) the general authority for the collection of this information is 35 U.S.C. 2(b)(2); (2) furnishing of the information solicited is voluntary; and (3) the principal purpose for which the information is used by the U.S. Patent and Trademark Office is to process and/or examine your submission related to a patent application or patent. If you do not furnish the requested information, the U.S. Patent and Trademark Office may not be able to process and/or examine your submission, which may result in termination of proceedings or abandonment of the application or expiration of the patent.

The information provided by you in this form will be subject to the following routine uses:

1. The information on this form will be treated confidentially to the extent allowed under the Freedom of Information Act (5 U.S.C. 552) and the Privacy Act (5 U.S.C. 552a). Records from this system of records may be disclosed to the Department of Justice to determine whether the Freedom of Information Act requires disclosure of these record s.

2. A record from this system of records may be disclosed, as a routine use, in the course of presenting evidence to a court, magistrate, or administrative tribunal, including disclosures to opposing counsel in the course of settlement negotiations.

3. A record in this system of records may be disclosed, as a routine use, to a Member of Congress submitting a request involving an individual, to whom the record pertains, when the individual has requested assistance from the Member with respect to the subject matter of the record.

4. A record in this system of records may be disclosed, as a routine use, to a contractor of the Agency having need for the information in order to perform a contract. Recipients of information shall be required to comply with the requirements of the Privacy Act of 1974, as amended, pursuant to 5 U.S.C. 552a(m).

5. A record related to an International Application filed under the Patent Cooperation Treaty in this system of records may be disclosed, as a routine use, to the International Bureau of the World Intellectual Property Organization, pursuant to the Patent Cooperation Treaty.

6. A record in this system of records may be disclosed, as a routine use, to another federal agency for purposes of National Security review (35 U.S.C. 181) and for review pursuant to the Atomic Energy Act (42 U.S.C. 218(c)).

7. A record from this system of records may be disclosed, as a routine use, to the Administrator, General Services, or his/her designee, during an inspection of records conducted by GSA as part of that agency's responsibility to recommend improvements in records management practices and programs, under authority of 44 U.S.C. 2904 and 2906. Such disclosure shall be made in accordance with the GSA regulations governing inspection of records for this purpose, and any other relevant (i.e., GSA or Commerce) directive. Such disclosure shall not be used to make determinations about individuals.

8. A record from this system of records may be disclosed, as a routine use, to the public after either publication of the application pursuant to 35 U.S.C. 122(b) or issuance of a patent pursuant to 35 U.S.C. 151. Further, a record may be disclosed, subject to the limitations of 37 CFR 1.14, as a routine use, to the public if the record was filed in an application which became abandoned or in which the proceedings were terminated and which application is referenced by either a published application, an application open to public inspections or an issued patent.

9. A record from this system of records may be disclosed, as a routine use, to a Federal, State, or local law enforcement agency, if the USPTO becomes aware of a violation or potential violation of law or regulation.

UNITED STATES PATENT AND TRADEMARK OFFICE

Commissioner for Patents
United States Patent and Trademark Office
P.O. Box 1450
Alexandria, VA 22313-1450
www.uspto.gov

In re Patent No. 5429819
Issue Date: July 4,1995
Application No. 08134124
Filed: October 8,1993
Attorney Docket No. 88616(P10960

:
:DECISION GRANTING PETITION
:UNDER 37 CFR 1.378(c)
:

This is a decision on the electronic petition, filed November 12,2007 ,under 37 CFR 1.378(c) to accept the unintentionally delayed payment of the 11.5 year maintenance fee for the above-identified patent.

The petition is GRANTED.

The maintenance fee is accepted, and the above-identified patent reinstated as of November 12,2007. This decision also constitutes notice that the fee has been accepted. An electronic copy of the petition and this decision has been created as an entry in an Image File Wrapper. Nevertheless, petitioner should print and retain an independent copy

Telephone inquires related to this electronic decision should be directed to the Electronic Business Center at 1-866-217-9197.

PTO/SB/66 (03-09)
Approved for use through 03/31/2012. OMB 0651-0016
U.S. Patent and Trademark Office: U.S. DEPARTMENT OF COMMERCE
Under the Paperwork Reduction Act of 1995, no persons are required to respond to a collection of information unless it displays valid OMB control number.

PETITION TO ACCEPT UNINTENTIONALLY DELAYED PAYMENT OF MAINTENANCE FEE IN AN EXPIRED PATENT (37 CFR 1.378(c))

Patent Number	Issue Date (YYYY-MM-DD)	Application Number	Filing Date (YYYY-MM-DD)	Docket Number (if applicable)
5,478,990	1995-12-26	08/137,290	1993-10-14	50043-00000

CAUTION: Maintenance fee (and surcharge, if any) payment must correctly identify: (1) the patent number and (2) the application number of the actual U.S. application leading to issuance of that patent to ensure the fee(s) is/are associated with the correct patent. 37 CFR 1.366(c) and (d).

SMALL ENTITY
☐ Patentee claims, or has previously claimed, small entity status. See 37 CFR 1.27.

LOSS OF ENTITLEMENT TO SMALL ENTITY STATUS
☒ Patentee is no longer entitled to small entity status. See 37 CFR 1.27(g)

NOT Small Entity		Small Entity	
Fee	Code	Fee	Code
○ 3 ½ year	(1551)	○ 3 ½ year	(2551)
○ 7 ½ year	(1552)	○ 7 ½ year	(2552)
◉ 11 ½ year	(1553)	○ 11 ½ year	(2553)

SURCHARGE
The surcharge required by 37 CFR 1.20(i)(2) (Fee Code 1558) must be paid as a condition of accepting unintentionally delayed payment of the maintenance fee.

MAINTENANCE FEE (37 CFR 1.20(e)-(g))
The appropriate maintenance fee must be submitted with this petition.

STATEMENT
THE UNDERSIGNED CERTIFIES THAT THE DELAY IN PAYMENT OF THE MAINTENANCE FEE TO THIS PATENT WAS UNINTENTIONAL

PETITIONER(S) REQUEST THAT THE DELAYED PAYMENT OF THE MAINTENANCE FEE BE ACCEPTED AND THE PATENT REINSTATED

THIS PORTION MUST BE COMPLETED BY THE SIGNATORY OR SIGNATORIES

37 CFR 1.378(d) states: "Any petition under this section must be signed by an attorney or agent registered to practice before the Patent and Trademark Office, or by the patentee, the assignee, or other party in interest."

I certify, in accordance with 37 CFR 1.4(d)(4) that I am

◉ An attorney or agent registered to practice before the Patent and Trademark Office

○ A sole patentee

○ A joint patentee; I certify that I am authorized to sign this submission on behalf of all the other patentees.

○ A joint patentee; all of whom are signing this e-petition

○ The assignee of record of the entire interest

Patent Practitioner			
A signature of the applicant or representative is required in accordance with 37 CFR 1.33 and 10.18. Please see 37 CFR 1.4(d) for the form of the signature			
Signature	/Craig Buschmann/	Date (YYYY-MM-DD)	2009-10-11
Name	Craig Buschmann	Registration Number	57829

This collection of information is required by 37 CFR 1.378(c). The information is required to obtain or retain a benefit by the public which is to file (and by the USPTO to process) an application. Confidentiality is governed by 35 U.S.C. 122 and 37 CFR 1.11 and 1.14. This collection is estimated to take 1 hour to complete, including gathering, preparing, and submitting the completed application form to the USPTO. Time will vary depending upon the individual case. Any comments on the amount of time you require to complete this form and/ or suggestions for reducing this burden, should be sent to the Chief Information Officer, U.S. Patent and Trademark Office, U.S. Department of Commerce, P.O. Box 1450, Alexandria, VA 22313-1450. DO NOT SEND FEES OR COMPLETED FORMS TO THIS ADDRESS. **This form can only be used when in conjunction with EFS-Web. If this form is mailed to the USPTO, it may cause delays in reinstating the patent.**

Privacy Act Statement

The Privacy Act of 1974 (P.L. 93-579) requires that you be given certain information in connection with your submission of the attached form related to a patent application or patent. Accordingly, pursuant to the requirements of the Act, please be advised that: (1) the general authority for the collection of this information is 35 U.S.C. 2(b)(2); (2) furnishing of the information solicited is voluntary; and (3) the principal purpose for which the information is used by the U.S. Patent and Trademark Office is to process and/or examine your submission related to a patent application or patent. If you do not furnish the requested information, the U.S. Patent and Trademark Office may not be able to process and/or examine your submission, which may result in termination of proceedings or abandonment of the application or expiration of the patent.

The information provided by you in this form will be subject to the following routine uses:

1. The information on this form will be treated confidentially to the extent allowed under the Freedom of Information Act (5 U.S.C. 552) and the Privacy Act (5 U.S.C. 552a). Records from this system of records may be disclosed to the Department of Justice to determine whether the Freedom of Information Act requires disclosure of these records.

2. A record from this system of records may be disclosed, as a routine use, in the course of presenting evidence to a court, magistrate, or administrative tribunal, including disclosures to opposing counsel in the course of settlement negotiations.

3. A record in this system of records may be disclosed, as a routine use, to a Member of Congress submitting a request involving an individual, to whom the record pertains, when the individual has requested assistance from the Member with respect to the subject matter of the record.

4. A record in this system of records may be disclosed, as a routine use, to a contractor of the Agency having need for the information in order to perform a contract. Recipients of information shall be required to comply with the requirements of the Privacy Act of 1974, as amended, pursuant to 5 U.S.C. 552a(m).

5. A record related to an International Application filed under the Patent Cooperation Treaty in this system of records may be disclosed, as a routine use, to the International Bureau of the World Intellectual Property Organization, pursuant to the Patent Cooperation Treaty.

6. A record in this system of records may be disclosed, as a routine use, to another federal agency for purposes of National Security review (35 U.S.C. 181) and for review pursuant to the Atomic Energy Act (42 U.S.C. 218(c)).

7. A record from this system of records may be disclosed, as a routine use, to the Administrator, General Services, or his/her designee, during an inspection of records conducted by GSA as part of that agency's responsibility to recommend improvements in records management practices and programs, under authority of 44 U.S.C. 2904 and 2906. Such disclosure shall be made in accordance with the GSA regulations governing inspection of records for this purpose, and any other relevant (i.e., GSA or Commerce) directive. Such disclosure shall not be used to make determinations about individuals.

8. A record from this system of records may be disclosed, as a routine use, to the public after either publication of the application pursuant to 35 U.S.C. 122(b) or issuance of a patent pursuant to 35 U.S.C. 151. Further, a record may be disclosed, subject to the limitations of 37 CFR 1.14, as a routine use, to the public if the record was filed in an application which became abandoned or in which the proceedings were terminated and which application is referenced by either a published application, an application open to public inspections or an issued patent.

9. A record from this system of records may be disclosed, as a routine use, to a Federal, State, or local law enforcement agency, if the USPTO becomes aware of a violation or potential violation of law or regulation.

UNITED STATES PATENT AND TRADEMARK OFFICE

Commissioner for Patents
United States Patent and Trademark Office
P.O. Box 1450
Alexandria, VA 22313-1450
www.uspto.gov

In re Patent No. 5478990
Issue Date: December 26,1995
Application No. 08137290
Filed: October 14,1993
Attorney Docket No. 21125

:
:DECISION GRANTING PETITION
:UNDER 37 CFR 1.378(c)
:

This is a decision on the electronic petition, filed October 11,2009 ,under 37 CFR 1.378(c) to accept the unintentionally delayed payment of the 11.5 year maintenance fee for the above-identified patent.

The petition is **GRANTED**.

The maintenance fee is accepted, and the above-identified patent reinstated as of October 11,2009 . This decision also constitutes notice that the fee has been accepted. An electronic copy of the petition and this decision has been created as an entry in the Image File Wrapper. Nevertheless, petitioner should print and retain an independent copy.

Telephone inquiries related to this electronic decision should be directed to the Electronic Business Center at 1-866-217-9197.

PTO/SB/66 (03-09)
Approved for use through 03/31/2012. OMB 0651-0016
U.S. Patent and Trademark Office: U.S. DEPARTMENT OF COMMERCE
Under the Paperwork Reduction Act of 1995, no persons are required to respond to a collection of information unless it displays valid OMB control number.

PETITION TO ACCEPT UNINTENTIONALLY DELAYED PAYMENT OF MAINTENANCE FEE IN AN EXPIRED PATENT (37 CFR 1.378(c))

Patent Number	Issue Date (YYYY-MM-DD)	Application Number	Filing Date (YYYY-MM-DD)	Docket Number (if applicable)
5587832	1996-12-24	08138067	1993-10-20	ID 023709 - JLR

CAUTION: Maintenance fee (and surcharge, if any) payment must correctly identify: (1) the patent number and (2) the application number of the actual U.S. application leading to issuance of that patent to ensure the fee(s) is/are associated with the correct patent. 37 CFR 1.366(c) and (d).

SMALL ENTITY
☐ Patentee claims, or has previously claimed, small entity status. See 37 CFR 1.27.

LOSS OF ENTITLEMENT TO SMALL ENTITY STATUS
☒ Patentee is no longer entitled to small entity status. See 37 CFR 1.27(g)

NOT Small Entity		Small Entity	
Fee	Code	Fee	Code
○ 3 ½ year	(1551)	○ 3 ½ year	(2551)
○ 7 ½ year	(1552)	○ 7 ½ year	(2552)
◉ 11 ½ year	(1553)	○ 11 ½ year	(2553)

SURCHARGE
The surcharge required by 37 CFR 1.20(i)(2) (Fee Code 1558) must be paid as a condition of accepting unintentionally delayed payment of the maintenance fee.

MAINTENANCE FEE (37 CFR 1.20(e)-(g))
The appropriate maintenance fee must be submitted with this petition.

STATEMENT
THE UNDERSIGNED CERTIFIES THAT THE DELAY IN PAYMENT OF THE MAINTENANCE FEE TO THIS PATENT WAS UNINTENTIONAL

PETITIONER(S) REQUEST THAT THE DELAYED PAYMENT OF THE MAINTENANCE FEE BE ACCEPTED AND THE PATENT REINSTATED

THIS PORTION MUST BE COMPLETED BY THE SIGNATORY OR SIGNATORIES

37 CFR 1.378(d) states: "Any petition under this section must be signed by an attorney or agent registered to practice before the Patent and Trademark Office, or by the patentee, the assignee, or other party in interest."

I certify, in accordance with 37 CFR 1.4(d)(4) that I am

◉ An attorney or agent registered to practice before the Patent and Trademark Office

○ A sole patentee

○ A joint patentee; I certify that I am authorized to sign this submission on behalf of all the other patentees.

○ A joint patentee; all of whom are signing this e-petition

○ The assignee of record of the entire interest

Patent Practitioner			
A signature of the applicant or representative is required in accordance with 37 CFR 1.33 and 10.18. Please see 37 CFR 1.4(d) for the form of the signature			
Signature	/DJCushing/	Date (YYYY-MM-DD)	2009-07-10
Name	David J. Cushing	Registration Number	28703

This collection of information is required by 37 CFR 1.378(c). The information is required to obtain or retain a benefit by the public which is to file (and by the USPTO to process) an application. Confidentiality is governed by 35 U.S.C. 122 and 37 CFR 1.11 and 1.14. This collection is estimated to take 1 hour to complete, including gathering, preparing, and submitting the completed application form to the USPTO. Time will vary depending upon the individual case. Any comments on the amount of time you require to complete this form and/ or suggestions for reducing this burden, should be sent to the Chief Information Officer, U.S. Patent and Trademark Office, U.S. Department of Commerce, P.O. Box 1450, Alexandria, VA 22313-1450. DO NOT SEND FEES OR COMPLETED FORMS TO THIS ADDRESS. **This form can only be used when in conjunction with EFS-Web. If this form is mailed to the USPTO, it may cause delays in reinstating the patent.**

Privacy Act Statement

The Privacy Act of 1974 (P.L. 93-579) requires that you be given certain information in connection with your submission of the attached form related to a patent application or patent. Accordingly, pursuant to the requirements of the Act, please be advised that: (1) the general authority for the collection of this information is 35 U.S.C. 2(b)(2); (2) furnishing of the information solicited is voluntary; and (3) the principal purpose for which the information is used by the U.S. Patent and Trademark Office is to process and/or examine your submission related to a patent application or patent. If you do not furnish the requested information, the U.S. Patent and Trademark Office may not be able to process and/or examine your submission, which may result in termination of proceedings or abandonment of the application or expiration of the patent.

The information provided by you in this form will be subject to the following routine uses:

1. The information on this form will be treated confidentially to the extent allowed under the Freedom of Information Act (5 U.S.C. 552) and the Privacy Act (5 U.S.C. 552a). Records from this system of records may be disclosed to the Department of Justice to determine whether the Freedom of Information Act requires disclosure of these records.

2. A record from this system of records may be disclosed, as a routine use, in the course of presenting evidence to a court, magistrate, or administrative tribunal, including disclosures to opposing counsel in the course of settlement negotiations.

3. A record in this system of records may be disclosed, as a routine use, to a Member of Congress submitting a request involving an individual, to whom the record pertains, when the individual has requested assistance from the Member with respect to the subject matter of the record.

4. A record in this system of records may be disclosed, as a routine use, to a contractor of the Agency having need for the information in order to perform a contract. Recipients of information shall be required to comply with the requirements of the Privacy Act of 1974, as amended, pursuant to 5 U.S.C. 552a(m).

5. A record related to an International Application filed under the Patent Cooperation Treaty in this system of records may be disclosed, as a routine use, to the International Bureau of the World Intellectual Property Organization, pursuant to the Patent Cooperation Treaty.

6. A record in this system of records may be disclosed, as a routine use, to another federal agency for purposes of National Security review (35 U.S.C. 181) and for review pursuant to the Atomic Energy Act (42 U.S.C. 218(c)).

7. A record from this system of records may be disclosed, as a routine use, to the Administrator, General Services, or his/her designee, during an inspection of records conducted by GSA as part of that agency's responsibility to recommend improvements in records management practices and programs, under authority of 44 U.S.C. 2904 and 2906. Such disclosure shall be made in accordance with the GSA regulations governing inspection of records for this purpose, and any other relevant (i.e., GSA or Commerce) directive. Such disclosure shall not be used to make determinations about individuals.

8. A record from this system of records may be disclosed, as a routine use, to the public after either publication of the application pursuant to 35 U.S.C. 122(b) or issuance of a patent pursuant to 35 U.S.C. 151. Further, a record may be disclosed, subject to the limitations of 37 CFR 1.14, as a routine use, to the public if the record was filed in an application which became abandoned or in which the proceedings were terminated and which application is referenced by either a published application, an application open to public inspections or an issued patent.

9. A record from this system of records may be disclosed, as a routine use, to a Federal, State, or local law enforcement agency, if the USPTO becomes aware of a violation or potential violation of law or regulation.

UNITED STATES PATENT AND TRADEMARK OFFICE

Commissioner for Patents
United States Patent and Trademark Office
P.O. Box 1450
Alexandria, VA 22313-1450
www.uspto.gov

In re Patent No. 5587832
Issue Date: December 24,1996
Application No. 08138067
Filed: October 20,1993
Attorney Docket No. 08493

:
:DECISION GRANTING PETITION
:UNDER 37 CFR 1.378(c)
:

This is a decision on the electronic petition, filed July 10,2009 ,under 37 CFR 1.378(c) to accept the unintentionally delayed payment of the 11.5 year maintenance fee for the above-identified patent.

The petition is **GRANTED**.

The maintenance fee is accepted, and the above-identified patent reinstated as of July 10,2009 . This decision also constitutes notice that the fee has been accepted. An electronic copy of the petition and this decision has been created as an entry in the Image File Wrapper. Nevertheless, petitioner should print and retain an independent copy.

Telephone inquiries related to this electronic decision should be directed to the Electronic Business Center at 1-866-217-9197.

PTO/SB/66 (03-09)
Approved for use through 03/31/2012. OMB 0651-0016
U.S. Patent and Trademark Office: U.S. DEPARTMENT OF COMMERCE
Under the Paperwork Reduction Act of 1995, no persons are required to respond to a collection of information unless it displays valid OMB control number.

PETITION TO ACCEPT UNINTENTIONALLY DELAYED PAYMENT OF MAINTENANCE FEE IN AN EXPIRED PATENT (37 CFR 1.378(c))

Patent Number	Issue Date (YYYY-MM-DD)	Application Number	Filing Date (YYYY-MM-DD)	Docket Number (if applicable)
5696412	1997-12-09	08/138,217	1993-10-20	1024-071

CAUTION: Maintenance fee (and surcharge, if any) payment must correctly identify: (1) the patent number and (2) the application number of the actual U.S. application leading to issuance of that patent to ensure the fee(s) is/are associated with the correct patent. 37 CFR 1.366(c) and (d).

SMALL ENTITY
☐ Patentee claims, or has previously claimed, small entity status. See 37 CFR 1.27.

LOSS OF ENTITLEMENT TO SMALL ENTITY STATUS
☒ Patentee is no longer entitled to small entity status. See 37 CFR 1.27(g)

NOT Small Entity		Small Entity	
Fee	Code	Fee	Code
○ 3 ½ year	(1551)	○ 3 ½ year	(2551)
○ 7 ½ year	(1552)	○ 7 ½ year	(2552)
◉ 11 ½ year	(1553)	○ 11 ½ year	(2553)

SURCHARGE
The surcharge required by 37 CFR 1.20(i)(2) (Fee Code 1558) must be paid as a condition of accepting unintentionally delayed payment of the maintenance fee.

MAINTENANCE FEE (37 CFR 1.20(e)-(g))
The appropriate maintenance fee must be submitted with this petition.

STATEMENT
THE UNDERSIGNED CERTIFIES THAT THE DELAY IN PAYMENT OF THE MAINTENANCE FEE TO THIS PATENT WAS UNINTENTIONAL

PETITIONER(S) REQUEST THAT THE DELAYED PAYMENT OF THE MAINTENANCE FEE BE ACCEPTED AND THE PATENT REINSTATED

THIS PORTION MUST BE COMPLETED BY THE SIGNATORY OR SIGNATORIES

37 CFR 1.378(d) states: "Any petition under this section must be signed by an attorney or agent registered to practice before the Patent and Trademark Office, or by the patentee, the assignee, or other party in interest."

I certify, in accordance with 37 CFR 1.4(d)(4) that I am

◉ An attorney or agent registered to practice before the Patent and Trademark Office

○ A sole patentee

○ A joint patentee; I certify that I am authorized to sign this submission on behalf of all the other patentees.

○ A joint patentee; all of whom are signing this e-petition

○ The assignee of record of the entire interest

Patent Practitioner			
A signature of the applicant or representative is required in accordance with 37 CFR 1.33 and 10.18. Please see 37 CFR 1.4(d) for the form of the signature			
Signature	/Michael N. Haynes/	Date (YYYY-MM-DD)	2010-06-24
Name	Michael N. Haynes	Registration Number	40014

This collection of information is required by 37 CFR 1.378(c). The information is required to obtain or retain a benefit by the public which is to file (and by the USPTO to process) an application. Confidentiality is governed by 35 U.S.C. 122 and 37 CFR 1.11 and 1.14. This collection is estimated to take 1 hour to complete, including gathering, preparing, and submitting the completed application form to the USPTO. Time will vary depending upon the individual case. Any comments on the amount of time you require to complete this form and/ or suggestions for reducing this burden, should be sent to the Chief Information Officer, U.S. Patent and Trademark Office, U.S. Department of Commerce, P.O. Box 1450, Alexandria, VA 22313-1450. DO NOT SEND FEES OR COMPLETED FORMS TO THIS ADDRESS. **This form can only be used when in conjunction with EFS-Web. If this form is mailed to the USPTO, it may cause delays in reinstating the patent.**

Privacy Act Statement

The Privacy Act of 1974 (P.L. 93-579) requires that you be given certain information in connection with your submission of the attached form related to a patent application or patent. Accordingly, pursuant to the requirements of the Act, please be advised that: (1) the general authority for the collection of this information is 35 U.S.C. 2(b)(2); (2) furnishing of the information solicited is voluntary; and (3) the principal purpose for which the information is used by the U.S. Patent and Trademark Office is to process and/or examine your submission related to a patent application or patent. If you do not furnish the requested information, the U.S. Patent and Trademark Office may not be able to process and/or examine your submission, which may result in termination of proceedings or abandonment of the application or expiration of the patent.

The information provided by you in this form will be subject to the following routine uses:

1. The information on this form will be treated confidentially to the extent allowed under the Freedom of Information Act (5 U.S.C. 552) and the Privacy Act (5 U.S.C. 552a). Records from this system of records may be disclosed to the Department of Justice to determine whether the Freedom of Information Act requires disclosure of these records.

2. A record from this system of records may be disclosed, as a routine use, in the course of presenting evidence to a court, magistrate, or administrative tribunal, including disclosures to opposing counsel in the course of settlement negotiations.

3. A record in this system of records may be disclosed, as a routine use, to a Member of Congress submitting a request involving an individual, to whom the record pertains, when the individual has requested assistance from the Member with respect to the subject matter of the record.

4. A record in this system of records may be disclosed, as a routine use, to a contractor of the Agency having need for the information in order to perform a contract. Recipients of information shall be required to comply with the requirements of the Privacy Act of 1974, as amended, pursuant to 5 U.S.C. 552a(m).

5. A record related to an International Application filed under the Patent Cooperation Treaty in this system of records may be disclosed, as a routine use, to the International Bureau of the World Intellectual Property Organization, pursuant to the Patent Cooperation Treaty.

6. A record in this system of records may be disclosed, as a routine use, to another federal agency for purposes of National Security review (35 U.S.C. 181) and for review pursuant to the Atomic Energy Act (42 U.S.C. 218(c)).

7. A record from this system of records may be disclosed, as a routine use, to the Administrator, General Services, or his/her designee, during an inspection of records conducted by GSA as part of that agency's responsibility to recommend improvements in records management practices and programs, under authority of 44 U.S.C. 2904 and 2906. Such disclosure shall be made in accordance with the GSA regulations governing inspection of records for this purpose, and any other relevant (i.e., GSA or Commerce) directive. Such disclosure shall not be used to make determinations about individuals.

8. A record from this system of records may be disclosed, as a routine use, to the public after either publication of the application pursuant to 35 U.S.C. 122(b) or issuance of a patent pursuant to 35 U.S.C. 151. Further, a record may be disclosed, subject to the limitations of 37 CFR 1.14, as a routine use, to the public if the record was filed in an application which became abandoned or in which the proceedings were terminated and which application is referenced by either a published application, an application open to public inspections or an issued patent.

9. A record from this system of records may be disclosed, as a routine use, to a Federal, State, or local law enforcement agency, if the USPTO becomes aware of a violation or potential violation of law or regulation.

UNITED STATES PATENT AND TRADEMARK OFFICE

Commissioner for Patents
United States Patent and Trademark Office
P.O. Box 1450
Alexandria, VA 22313-1450
www.uspto.gov

In re Patent No. 5696412
Issue Date: December 9,1997
Application No. 08138217
Filed: October 20,1993
Attorney Docket No. P53655

:
:DECISION GRANTING PETITION
:UNDER 37 CFR 1.378(c)
:

This is a decision on the electronic petition, filed June 24,2010 ,under 37 CFR 1.378(c) to accept the unintentionally delayed payment of the 11.5 year maintenance fee for the above-identified patent.

The petition is **GRANTED**.

The maintenance fee is accepted, and the above-identified patent reinstated as of June 24,2010 .
This decision also constitutes notice that the fee has been accepted. An electronic copy of the petition and this decision has been created as an entry in the Image File Wrapper. Nevertheless, petitioner should print and retain an independent copy.

Telephone inquiries related to this electronic decision should be directed to the Electronic Business Center at 1-866-217-9197.

UNITED STATES PATENT AND TRADEMARK OFFICE

Commissioner for Patents
United States Patent and Trademark Office
P.O. Box 1450
Alexandria, VA 22313-1450
www.uspto.gov

In re Patent No. 5380445
Issue Date: January 10,1995
Application No. 08139840
Filed: October 22,1993
Attorney Docket No. NRELIR#9247

:
:DECISION GRANTING PETITION
:UNDER 37 CFR 1.378(c)
:

This is a decision on the electronic petition, filed January 24,2007 ,under 37 CFR 1.378(c) to accept the unintentionally delayed payment of the 11.5 year maintenance fee for the above-identified patent.

The petition is GRANTED.

The maintenance fee is accepted, and the above-identified patent reinstated as of January 24,2007 . This decision also constitutes notice that the fee has been accepted. An electronic copy of the petition and this decision has been created as an entry in an Image File Wrapper. Nevertheless, petitioner should print and retain an independent copy

Telephone inquires related to this electronic decision should be directed to the Electronic Business Center at 1-866-217-9197.

Under the Paperwork Reduction Act of 1995, no persons are required to respond to a collection of information unless it displays valid OMB control number.

PETITION TO ACCEPT UNINTENTIONALLY DELAYED PAYMENT OF MAINTENANCE FEE IN AN EXPIRED PATENT (37 CFR 1.378(c))

Patent Number	Issue Date (YYYY-MM-DD)	Application Number	Filing Date (YYYY-MM-DD)	Docket Number (if applicable)
5380445	1995-01-10	08139840	1993-10-22	NREL 92-47

CAUTION: Maintenance fee (and surcharge, if any) payment must correctly identify: (1) the patent number and (2) the application number of the actual U.S. application leading to issuance of that patent to ensure the fee(s) is/are associated with the correct patent. 37 CFR 1.366(c) and (d).

SMALL ENTITY
☒ Patentee claims, or has previously claimed, small entity status. See 37 CFR 1.27.

LOSS OF ENTITLEMENT TO SMALL ENTITY STATUS
☐ Patentee is no longer entitled to small entity status. See 37 CFR 1.27(g)

NOT Small Entity			Small Entity		
	Fee	Code		Fee	Code
○	3 ½ year	(1551)	○	3 ½ year	(2551)
○	7 ½ year	(1552)	○	7 ½ year	(2552)
○	11 ½ year	(1553)	◉	11 ½ year	(2553)

SURCHARGE
The surcharge required by 37 CFR 1.20(i)(2) (Fee Code 1558) must be paid as a condition of accepting unintentionally delayed payment of the maintenance fee.

MAINTENANCE FEE (37 CFR 1.20(e)-(g))
The appropriate maintenance fee must be submitted with this petition.

STATEMENT
THE UNDERSIGNED CERTIFIES THAT THE DELAY IN PAYMENT OF THE MAINTENANCE FEE TO THIS PATENT WAS UNINTENTIONAL

PETITIONER(S) REQUEST THAT THE DELAYED PAYMENT OF THE MAINTENANCE FEE BE ACCEPTED AND THE PATENT REINSTATED

THIS PORTION MUST BE COMPLETED BY THE SIGNATORY OR SIGNATORIES

37 CFR 1.378(d) states: "Any petition under this section must be signed by an attorney or agent registered to practice before the Patent and Trademark Office, or by the patentee, the assignee, or other party in interest."

I certify, in accordance with 37 CFR 1.4(d)(4) that I am

◉ An attorney or agent registered to practice before the Patent and Trademark Office

○ A sole patentee

○ A joint patentee; I certify that I am authorized to sign this submission on behalf of all the other patentees.

○ A joint patentee; all of whom are signing this e-petition

○ The assignee of record of the entire interest

Patent Practitioner			
A signature of the applicant or representative is required in accordance with 37 CFR 1.33 and 10.18. Please see 37 CFR 1.4(d) for the form of the signature			
Signature	/Paul J. White/	Date (YYYY-MM-DD)	
Name	PAUL J. WHITE	Registration Number	30436

This collection of information is required by 37 CFR 1.378(c). The information is required to obtain or retain a benefit by the public which is to file (and by the USPTO to process) an application. Confidentiality is governed by 35 U.S.C. 122 and 37 CFR 1.11 and 1.14. This collection is estimated to take 1 hour to complete, including gathering, preparing, and submitting the completed application form to the USPTO. Time will vary depending upon the individual case. Any comments on the amount of time you require to complete this form and/ or suggestions for reducing this burden, should be sent to the Chief Information Officer, U.S. Patent and Trademark Office, U.S. Department of Commerce, P.O. Box 1450, Alexandria, VA 22313-1450. DO NOT SEND FEES OR COMPLETED FORMS TO THIS ADDRESS. **This form can only be used when in conjunction with EFS-Web. If this form is mailed to the USPTO, it may cause delays in reinstating the patent.**

Privacy Act Statement

The Privacy Act of 1974 (P.L. 93-579) requires that you be given certain information in connection with your submission of the attached form related to a patent application or patent. Accordingly, pursuant to the requirements of the Act, please be advised that: (1) the general authority for the collection of this information is 35 U.S.C. 2(b)(2); (2) furnishing of the information solicited is voluntary; and (3) the principal purpose for which the information is used by the U.S. Patent and Trademark Office is to process and/or examine your submission related to a patent application or patent. If you do not furnish the requested information, the U.S. Patent and Trademark Office may not be able to process and/or examine your submission, which may result in termination of proceedings or abandonment of the application or expiration of the patent.

The information provided by you in this form will be subject to the following routine uses:

1. The information on this form will be treated confidentially to the extent allowed under the Freedom of Information Act (5 U.S.C. 552) and the Privacy Act (5 U.S.C. 552a). Records from this system of records may be disclosed to the Department of Justice to determine whether the Freedom of Information Act requires disclosure of these record s.

2. A record from this system of records may be disclosed, as a routine use, in the course of presenting evidence to a court, magistrate, or administrative tribunal, including disclosures to opposing counsel in the course of settlement negotiations.

3. A record in this system of records may be disclosed, as a routine use, to a Member of Congress submitting a request involving an individual, to whom the record pertains, when the individual has requested assistance from the Member with respect to the subject matter of the record.

4. A record in this system of records may be disclosed, as a routine use, to a contractor of the Agency having need for the information in order to perform a contract. Recipients of information shall be required to comply with the requirements of the Privacy Act of 1974, as amended, pursuant to 5 U.S.C. 552a(m).

5. A record related to an International Application filed under the Patent Cooperation Treaty in this system of records may be disclosed, as a routine use, to the International Bureau of the World Intellectual Property Organization, pursuant to the Patent Cooperation Treaty.

6. A record in this system of records may be disclosed, as a routine use, to another federal agency for purposes of National Security review (35 U.S.C. 181) and for review pursuant to the Atomic Energy Act (42 U.S.C. 218(c)).

7. A record from this system of records may be disclosed, as a routine use, to the Administrator, General Services, or his/her designee, during an inspection of records conducted by GSA as part of that agency's responsibility to recommend improvements in records management practices and programs, under authority of 44 U.S.C. 2904 and 2906. Such disclosure shall be made in accordance with the GSA regulations governing inspection of records for this purpose, and any other relevant (i.e., GSA or Commerce) directive. Such disclosure shall not be used to make determinations about individuals.

8. A record from this system of records may be disclosed, as a routine use, to the public after either publication of the application pursuant to 35 U.S.C. 122(b) or issuance of a patent pursuant to 35 U.S.C. 151. Further, a record may be disclosed, subject to the limitations of 37 CFR 1.14, as a routine use, to the public if the record was filed in an application which became abandoned or in which the proceedings were terminated and which application is referenced by either a published application, an application open to public inspections or an issued patent.

9. A record from this system of records may be disclosed, as a routine use, to a Federal, State, or local law enforcement agency, if the USPTO becomes aware of a violation or potential violation of law or regulation.

SPE RESPONSE FOR CERTIFICATE OF CORRECTION

Paper No.:20100427

DATE : April 27, 2010

TO SPE OF : ART UNIT 1625

SUBJECT : Request for Certificate of Correction on Patent No.: 7655659

A response is requested with respect to the accompanying request for a certificate of correction.

Please complete this form and return with file, within **7** days to:
Certificates of Correction Branch - ST (South Tower) 9A22
Palm location **7590** - Tel. No. (703) 305-8309

With respect to the change(s) requested, correcting Office and/or Applicant's errors, should the patent read as shown in the certificate of correction? No new matter should be introduced, nor should the scope or meaning of the claims be changed.

Thank You For Your Assistance **Certificates of Correction Branch**

The request for issuing the above-identified correction(s) is hereby:

Note your decision on the appropriated box.

☒ **Approved** All changes apply.

☐ **Approved in Part** Specify below which changes **do not** apply.

☐ **Denied** State the reasons for denial below.

Comments:

/Janet L Andres/
Supervisory Patent Examiner.Art Unit 1625

Under the Paperwork Reduction Act of 1995, no persons are required to respond to a collection of information unless it displays valid OMB control number.

PETITION TO ACCEPT UNINTENTIONALLY DELAYED PAYMENT OF MAINTENANCE FEE IN AN EXPIRED PATENT (37 CFR 1.378(c))

Patent Number	Issue Date (YYYY-MM-DD)	Application Number	Filing Date (YYYY-MM-DD)	Docket Number (if applicable)
5,396,545	1995-03-07	08141864	1993-10-22	12174-36774

CAUTION: Maintenance fee (and surcharge, if any) payment must correctly identify: (1) the patent number and (2) the application number of the actual U.S. application leading to issuance of that patent to ensure the fee(s) is/are associated with the correct patent. 37 CFR 1.366(c) and (d).

SMALL ENTITY
☐ Patentee claims, or has previously claimed, small entity status. See 37 CFR 1.27.

LOSS OF ENTITLEMENT TO SMALL ENTITY STATUS
☐ Patentee is no longer entitled to small entity status. See 37 CFR 1.27(g)

NOT Small Entity			Small Entity		
	Fee	Code		Fee	Code
○	3 ½ year	(1551)	○	3 ½ year	(2551)
○	7 ½ year	(1552)	○	7 ½ year	(2552)
◉	11 ½ year	(1553)	○	11 ½ year	(2553)

SURCHARGE
The surcharge required by 37 CFR 1.20(i)(2) (Fee Code 1558) must be paid as a condition of accepting unintentionally delayed payment of the maintenance fee.

MAINTENANCE FEE (37 CFR 1.20(e)-(g))
The appropriate maintenance fee must be submitted with this petition.

STATEMENT
THE UNDERSIGNED CERTIFIES THAT THE DELAY IN PAYMENT OF THE MAINTENANCE FEE TO THIS PATENT WAS UNINTENTIONAL

PETITIONER(S) REQUEST THAT THE DELAYED PAYMENT OF THE MAINTENANCE FEE BE ACCEPTED AND THE PATENT REINSTATED

THIS PORTION MUST BE COMPLETED BY THE SIGNATORY OR SIGNATORIES

37 CFR 1.378(d) states: "Any petition under this section must be signed by an attorney or agent registered to practice before the Patent and Trademark Office, or by the patentee, the assignee, or other party in interest."

I certify, in accordance with 37 CFR 1.4(d)(4) that I am

◉ An attorney or agent registered to practice before the Patent and Trademark Office

○ A sole patentee

○ A joint patentee; I certify that I am authorized to sign this submission on behalf of all the other patentees.

○ A joint patentee; all of whom are signing this e-petition

○ The assignee of record of the entire interest

Patent Practitioner			
A signature of the applicant or representative is required in accordance with 37 CFR 1.33 and 10.18. Please see 37 CFR 1.4(d) for the form of the signature			
Signature	/John R. Harris/	Date (YYYY-MM-DD)	2007-07-18
Name	John R. Harris	Registration Number	30388

This collection of information is required by 37 CFR 1.378(c). The information is required to obtain or retain a benefit by the public which is to file (and by the USPTO to process) an application. Confidentiality is governed by 35 U.S.C. 122 and 37 CFR 1.11 and 1.14. This collection is estimated to take 1 hour to complete, including gathering, preparing, and submitting the completed application form to the USPTO. Time will vary depending upon the individual case. Any comments on the amount of time you require to complete this form and/ or suggestions for reducing this burden, should be sent to the Chief Information Officer, U.S. Patent and Trademark Office, U.S. Department of Commerce, P.O. Box 1450, Alexandria, VA 22313-1450. DO NOT SEND FEES OR COMPLETED FORMS TO THIS ADDRESS. **This form can only be used when in conjunction with EFS-Web. If this form is mailed to the USPTO, it may cause delays in reinstating the patent.**

Privacy Act Statement

The Privacy Act of 1974 (P.L. 93-579) requires that you be given certain information in connection with your submission of the attached form related to a patent application or patent. Accordingly, pursuant to the requirements of the Act, please be advised that: (1) the general authority for the collection of this information is 35 U.S.C. 2(b)(2); (2) furnishing of the information solicited is voluntary; and (3) the principal purpose for which the information is used by the U.S. Patent and Trademark Office is to process and/or examine your submission related to a patent application or patent. If you do not furnish the requested information, the U.S. Patent and Trademark Office may not be able to process and/or examine your submission, which may result in termination of proceedings or abandonment of the application or expiration of the patent.

The information provided by you in this form will be subject to the following routine uses:

1. The information on this form will be treated confidentially to the extent allowed under the Freedom of Information Act (5 U.S.C. 552) and the Privacy Act (5 U.S.C. 552a). Records from this system of records may be disclosed to the Department of Justice to determine whether the Freedom of Information Act requires disclosure of these record s.

2. A record from this system of records may be disclosed, as a routine use, in the course of presenting evidence to a court, magistrate, or administrative tribunal, including disclosures to opposing counsel in the course of settlement negotiations.

3. A record in this system of records may be disclosed, as a routine use, to a Member of Congress submitting a request involving an individual, to whom the record pertains, when the individual has requested assistance from the Member with respect to the subject matter of the record.

4. A record in this system of records may be disclosed, as a routine use, to a contractor of the Agency having need for the information in order to perform a contract. Recipients of information shall be required to comply with the requirements of the Privacy Act of 1974, as amended, pursuant to 5 U.S.C. 552a(m).

5. A record related to an International Application filed under the Patent Cooperation Treaty in this system of records may be disclosed, as a routine use, to the International Bureau of the World Intellectual Property Organization, pursuant to the Patent Cooperation Treaty.

6. A record in this system of records may be disclosed, as a routine use, to another federal agency for purposes of National Security review (35 U.S.C. 181) and for review pursuant to the Atomic Energy Act (42 U.S.C. 218(c)).

7. A record from this system of records may be disclosed, as a routine use, to the Administrator, General Services, or his/her designee, during an inspection of records conducted by GSA as part of that agency's responsibility to recommend improvements in records management practices and programs, under authority of 44 U.S.C. 2904 and 2906. Such disclosure shall be made in accordance with the GSA regulations governing inspection of records for this purpose, and any other relevant (i.e., GSA or Commerce) directive. Such disclosure shall not be used to make determinations about individuals.

8. A record from this system of records may be disclosed, as a routine use, to the public after either publication of the application pursuant to 35 U.S.C. 122(b) or issuance of a patent pursuant to 35 U.S.C. 151. Further, a record may be disclosed, subject to the limitations of 37 CFR 1.14, as a routine use, to the public if the record was filed in an application which became abandoned or in which the proceedings were terminated and which application is referenced by either a published application, an application open to public inspections or an issued patent.

9. A record from this system of records may be disclosed, as a routine use, to a Federal, State, or local law enforcement agency, if the USPTO becomes aware of a violation or potential violation of law or regulation.

UNITED STATES PATENT AND TRADEMARK OFFICE

Commissioner for Patents
United States Patent and Trademark Office
P.O. Box 1450
Alexandria, VA 22313-1450
www.uspto.gov

In re Patent No. 5396545
Issue Date: March 7,1995
Application No. 08141864
Filed: October 22,1993
Attorney Docket No. 130190112

:
:DECISION GRANTING PETITION
:UNDER 37 CFR 1.378(c)
:

This is a decision on the electronic petition, filed July 18,2007 ,under 37 CFR 1.378(c) to accept the unintentionally delayed payment of the 11.5 year maintenance fee for the above-identified patent.

The petition is GRANTED.

The maintenance fee is accepted, and the above-identified patent reinstated as of July 18,2007 . This decision also constitutes notice that the fee has been accepted. An electronic copy of the petition and this decision has been created as an entry in an Image File Wrapper. Nevertheless, petitioner should print and retain an independent copy

Telephone inquires related to this electronic decision should be directed to the Electronic Business Center at 1-866-217-9197.

Approved for use through 04/30/2009. OMB 0651-0016
U.S. Patent and Trademark Office: U.S. DEPARTMENT OF COMMERCE
Under the Paperwork Reduction Act of 1995, no persons are required to respond to a collection of information unless it displays valid OMB control number.

PETITION TO ACCEPT UNINTENTIONALLY DELAYED PAYMENT OF MAINTENANCE FEE IN AN EXPIRED PATENT (37 CFR 1.378(c))

Patent Number	Issue Date (YYYY-MM-DD)	Application Number	Filing Date (YYYY-MM-DD)	Docket Number (if applicable)
5,362,952	1994-11-08	08141918	1993-10-22	12174-36773

CAUTION: Maintenance fee (and surcharge, if any) payment must correctly identify: (1) the patent number and (2) the application number of the actual U.S. application leading to issuance of that patent to ensure the fee(s) is/are associated with the correct patent. 37 CFR 1.366(c) and (d).

SMALL ENTITY
☐ Patentee claims, or has previously claimed, small entity status. See 37 CFR 1.27.

LOSS OF ENTITLEMENT TO SMALL ENTITY STATUS
☐ Patentee is no longer entitled to small entity status. See 37 CFR 1.27(g)

NOT Small Entity		Small Entity	
Fee	Code	Fee	Code
○ 3 ½ year	(1551)	○ 3 ½ year	(2551)
○ 7 ½ year	(1552)	○ 7 ½ year	(2552)
◉ 11 ½ year	(1553)	○ 11 ½ year	(2553)

SURCHARGE
The surcharge required by 37 CFR 1.20(i)(2) (Fee Code 1558) must be paid as a condition of accepting unintentionally delayed payment of the maintenance fee.

MAINTENANCE FEE (37 CFR 1.20(e)-(g))
The appropriate maintenance fee must be submitted with this petition.

STATEMENT
THE UNDERSIGNED CERTIFIES THAT THE DELAY IN PAYMENT OF THE MAINTENANCE FEE TO THIS PATENT WAS UNINTENTIONAL

PETITIONER(S) REQUEST THAT THE DELAYED PAYMENT OF THE MAINTENANCE FEE BE ACCEPTED AND THE PATENT REINSTATED

THIS PORTION MUST BE COMPLETED BY THE SIGNATORY OR SIGNATORIES

37 CFR 1.378(d) states: "Any petition under this section must be signed by an attorney or agent registered to practice before the Patent and Trademark Office, or by the patentee, the assignee, or other party in interest."

I certify, in accordance with 37 CFR 1.4(d)(4) that I am

◉ An attorney or agent registered to practice before the Patent and Trademark Office

○ A sole patentee

○ A joint patentee; I certify that I am authorized to sign this submission on behalf of all the other patentees.

○ A joint patentee; all of whom are signing this e-petition

○ The assignee of record of the entire interest

Patent Practitioner			
A signature of the applicant or representative is required in accordance with 37 CFR 1.33 and 10.18. Please see 37 CFR 1.4(d) for the form of the signature			
Signature	/John R. Harris/	Date (YYYY-MM-DD)	2007-07-18
Name	John R. Harris	Registration Number	30388

This collection of information is required by 37 CFR 1.378(c). The information is required to obtain or retain a benefit by the public which is to file (and by the USPTO to process) an application. Confidentiality is governed by 35 U.S.C. 122 and 37 CFR 1.11 and 1.14. This collection is estimated to take 1 hour to complete, including gathering, preparing, and submitting the completed application form to the USPTO. Time will vary depending upon the individual case. Any comments on the amount of time you require to complete this form and/ or suggestions for reducing this burden, should be sent to the Chief Information Officer, U.S. Patent and Trademark Office, U.S. Department of Commerce, P.O. Box 1450, Alexandria, VA 22313-1450. DO NOT SEND FEES OR COMPLETED FORMS TO THIS ADDRESS. **This form can only be used when in conjunction with EFS-Web. If this form is mailed to the USPTO, it may cause delays in reinstating the patent.**

Privacy Act Statement

The Privacy Act of 1974 (P.L. 93-579) requires that you be given certain information in connection with your submission of the attached form related to a patent application or patent. Accordingly, pursuant to the requirements of the Act, please be advised that: (1) the general authority for the collection of this information is 35 U.S.C. 2(b)(2); (2) furnishing of the information solicited is voluntary; and (3) the principal purpose for which the information is used by the U.S. Patent and Trademark Office is to process and/or examine your submission related to a patent application or patent. If you do not furnish the requested information, the U.S. Patent and Trademark Office may not be able to process and/or examine your submission, which may result in termination of proceedings or abandonment of the application or expiration of the patent.

The information provided by you in this form will be subject to the following routine uses:

1. The information on this form will be treated confidentially to the extent allowed under the Freedom of Information Act (5 U.S.C. 552) and the Privacy Act (5 U.S.C. 552a). Records from this system of records may be disclosed to the Department of Justice to determine whether the Freedom of Information Act requires disclosure of these record s.

2. A record from this system of records may be disclosed, as a routine use, in the course of presenting evidence to a court, magistrate, or administrative tribunal, including disclosures to opposing counsel in the course of settlement negotiations.

3. A record in this system of records may be disclosed, as a routine use, to a Member of Congress submitting a request involving an individual, to whom the record pertains, when the individual has requested assistance from the Member with respect to the subject matter of the record.

4. A record in this system of records may be disclosed, as a routine use, to a contractor of the Agency having need for the information in order to perform a contract. Recipients of information shall be required to comply with the requirements of the Privacy Act of 1974, as amended, pursuant to 5 U.S.C. 552a(m).

5. A record related to an International Application filed under the Patent Cooperation Treaty in this system of records may be disclosed, as a routine use, to the International Bureau of the World Intellectual Property Organization, pursuant to the Patent Cooperation Treaty.

6. A record in this system of records may be disclosed, as a routine use, to another federal agency for purposes of National Security review (35 U.S.C. 181) and for review pursuant to the Atomic Energy Act (42 U.S.C. 218(c)).

7. A record from this system of records may be disclosed, as a routine use, to the Administrator, General Services, or his/her designee, during an inspection of records conducted by GSA as part of that agency's responsibility to recommend improvements in records management practices and programs, under authority of 44 U.S.C. 2904 and 2906. Such disclosure shall be made in accordance with the GSA regulations governing inspection of records for this purpose, and any other relevant (i.e., GSA or Commerce) directive. Such disclosure shall not be used to make determinations about individuals.

8. A record from this system of records may be disclosed, as a routine use, to the public after either publication of the application pursuant to 35 U.S.C. 122(b) or issuance of a patent pursuant to 35 U.S.C. 151. Further, a record may be disclosed, subject to the limitations of 37 CFR 1.14, as a routine use, to the public if the record was filed in an application which became abandoned or in which the proceedings were terminated and which application is referenced by either a published application, an application open to public inspections or an issued patent.

9. A record from this system of records may be disclosed, as a routine use, to a Federal, State, or local law enforcement agency, if the USPTO becomes aware of a violation or potential violation of law or regulation.

UNITED STATES PATENT AND TRADEMARK OFFICE

Commissioner for Patents
United States Patent and Trademark Office
P.O. Box 1450
Alexandria, VA 22313-1450
www.uspto.gov

In re Patent No. 5362952
Issue Date: November 8,1994
Application No. 08141918
Filed: October 22,1993
Attorney Docket No. 130190113

:
:DECISION GRANTING PETITION
:UNDER 37 CFR 1.378(c)
:

This is a decision on the electronic petition, filed July 18,2007 ,under 37 CFR 1.378(c) to accept the unintentionally delayed payment of the 11.5 year maintenance fee for the above-identified patent.

The petition is GRANTED.

The maintenance fee is accepted, and the above-identified patent reinstated as of July 18,2007 . This decision also constitutes notice that the fee has been accepted. An electronic copy of the petition and this decision has been created as an entry in an Image File Wrapper. Nevertheless, petitioner should print and retain an independent copy

Telephone inquires related to this electronic decision should be directed to the Electronic Business Center at 1-866-217-9197.

UNITED STATES PATENT AND TRADEMARK OFFICE

COMMISSIONER FOR PATENTS
UNITED STATES PATENT AND TRADEMARK OFFICE
WASHINGTON, D.C. 20231
www.uspto.gov

Paper No. 51

BARBARA S. KITCHELL
ARNOLD WHITE & DURKEE
P.O. BOX 4433
HOUSTON , TX 77210

COPY MAILED

JUL 1 7 2000

SPECIAL PROGRAMS OFFICE
DAC FOR PATENTS

In re Application of :
Wei-Wei Zhang et al. :
Application No. 08/145,826 :
Filed: October 29, 1993 :
Attorney Docket No. UTSC:350 :

ON PETITION

This is a decision on the petition under 37 CFR 1.137(b), filed April 18, 2000, to revive the above-identified application.

The petition is **DISMISSED**.

Any request for reconsideration of this decision must be submitted within TWO (2) MONTHS from the mail date of this decision. Extensions of time under 37 CFR 1.136(a) are permitted. The reconsideration request should include a cover letter entitled "Renewed Petition under 37 CFR 1.137(b)."

The above-identified application became abandoned for failure to file an appeal brief within the time period set by 37 CFR 1.192(a). The two-month period for filing a brief in triplicate (accompanied by the fee required) ran from May 10, 1999, the date the Notice of Appeal was filed. A two month extension of time was obtained. Accordingly, the above-identified application became abandoned on September 11, 1999.

Effective December 1, 1997, the provisions of 37 CFR 1.137(b) now provide that where the delay in reply was unintentional, a petition may be filed to revive an abandoned application or a lapsed patent pursuant to 37 CFR 1.137(b). A grantable petition pursuant to 37 CFR 1.137(b) must be accompanied by:

(1) the required reply, unless previously filed. In a

nonprovisional application abandoned for failure to prosecute, the required reply may be met by the filing of a continuing application. In an application or patent, abandoned or lapsed for failure to pay the issue fee or any portion thereof, the required reply must be the payment of the issue fee or any outstanding balance thereof.

(2) the petition fee as set forth in 37 CFR 1.17(m);

(3) a statement that the **entire** delay in filing the required reply from the due date for the reply until the filing of a grantable petition pursuant to 37 CFR 1.137(b) was unintentional. The Commissioner may require additional information where there is a question whether the delay was unintentional; and

(4) any terminal disclaimer (and fee set forth in 37 CFR 1.20(d)) required pursuant to 37 CFR 1.137(c).

The instant petition does not satisfy requirement (4) above.

When a terminal disclaimer is required pursuant to 37 CFR 1.137(c), the terminal disclaimer must dedicate to the public a terminal part of the term of any patent granted thereon equivalent to the period of abandonment of the application. The terminal disclaimer submitted in the instant petition is a "Terminal Disclaimer To Obviate A Provisional Double Patenting Rejection Over A Pending Second Application," and is therefore inapplicable in the present situation. A courtesy copy of the correct terminal disclaimer form is enclosed for your convenience.

Additionally, a terminal disclaimer must be signed by either the applicant, the assignee, or an attorney of record. *See* 37 CFR 1.321(b). The terminal disclaimer that was submitted with the instant petition is not acceptable because Stephen Highlander is not an attorney of record in this file, and Fulbright & Jaworski is not the firm of record in this file. Therefore, Mr. Highlander is without authority to sign the submitted terminal disclaimer.

There is no indication that petitioner, or petitioner's firm, herein was ever empowered to prosecute the instant application. If petitioner intends to pursue this matter by submitting a request for reconsideration, petitioner must provide the appropriate power of attorney documentation.

Furthermore, the application file does not indicate a change of address has been filed in this case, although the address given on the petition differs

from the address of record. A change of address should be filed in this case in accordance with MPEP 601.03. A courtesy copy of this decision is being mailed to the address noted on the petition. However, until otherwise instructed, all future correspondence regarding this application will be mailed solely to the address of record.

Further correspondence with respect to this matter should be addressed as follows:

By mail: Assistant Commissioner for Patents
Box DAC
Washington, DC 20231

By FAX: (703) 308-6916
Attn: Office of Petitions

By hand: Office of Petitions
2201 South Clark Place
Crystal Plaza 4, Suite 3C23
Arlington, VA

Telephone inquiries should be directed to Petitions Attorney Elenore Niu at (703) 305-0272.

Beverly M. Flanagan
Supervisory Petitions Examiner
Office of Petitions
Office of the Deputy Commissioner
for Patent Examination Policy

cc: Steven Highlander
Fulbright & Jaworski
600 Congress Avenue
Suite 1900
Austin, TX 78701

UNITED STATES PATENT AND TRADEMARK OFFICE

COMMISSIONER FOR PATENTS
UNITED STATES PATENT AND TRADEMARK OFFICE
WASHINGTON, D.C. 20231
www.uspto.gov

Paper No. 62

STEVEN L. HIGHLANDER
FULBRIGHT & JAWORSKI LLP
600 CONGRESS AVENUE, SUITE 1900
AUSTIN, TEXAS 78701

COPY MAILED

FEB 12 2001

OFFICE OF PETITIONS
A/C PATENTS

In re Application of	:	
Wei-Wei Zhang et al	:	
Application No. 08/145,826	:	ON PETITION
Filed: October 29, 1993	:	
Attorney Docket No. MYOG:025US	:	

This is a decision on the renewed petition under 37 CFR 1.137(b), filed October 23, 2000, to revive the above-identified application.

The petition is **GRANTED**.

The terminal disclaimer filed February 6, 2001 under 37 CFR 1.137(d) has been entered and made of record. 37 CFR 1.137(d)(1)[1] states that a terminal disclaimer filed pursuant to this rule must dedicate to the public a terminal part of the term of any patent granted thereon equivalent to the lesser of: 1) the period of abandonment of the application; or 2) the period extending beyond twenty years from the date on which the application for the patent was filed in the United States, or, if the application contains a specific reference to an earlier filed application(s) under 35 U.S.C. 120, 121 or 365(c), from the date on which the earliest such application was filed.

Telephone inquiries concerning this decision should be directed to the undersigned at (703) 305-9282.

---

[1] Effective September 20, 2000 (65 Fed. Reg. 54674, September 8, 2000).

The application file is being forwarded to forwarded to Technology Center AU 1636 for appropriate action in the normal course of business.

Frances Hicks

Frances Hicks
Petitions Examiner
Office of Petitions
Office of the Deputy Commissioner
for Patent Examination Policy

UNITED STATES PATENT AND TRADEMARK OFFICE

Commissioner for Patents
United States Patent and Trademark Office
Washington, D.C. 20231
www.uspto.gov

Paper No. 34

M. Lisa Wilson
5204 Delafield Avenue
Bronx, NY 10471

COPY MAILED

MAR 30 2001

OFFICE OF PETITIONS
A/C PATENTS

In re Application of
Andrew P. Laudano et al.
Application No. 08/146,235
Filed: November 2, 1993
Attorney Docket No. N/A

ON PETITION

This is a decision on the petition under 37 CFR 1.137(b), filed March 5, 2001, to revive the above-identified application.

The petition is **GRANTED**.

The above-identified application became abandoned for failure to reply timely to the non-final rejection mailed July 17, 2000. As the response to the Office action received January 17, 2001 in the form of an amendment and a one-month extension of time was imcomplete, the application became abandoned on October 18, 2000.

The application file will be forwarded to Technology Center 1600, Art Unit 1642 for further processing.

Telephone inquiries concerning this decision should be directed to Latrice Bond at (703) 308-6911.

Latrice Bond

Latrice Bond
Paralegal Specialist
Office of Petitions
Office of the Deputy Commissioner
for Patent Examination Policy

INTERFERENCE DIGEST

Interference No. 104,717 Paper No. 36

Name: Andrew P. Laudano et al.

Serial No.: 08/146,235 Patent No.

Title: PHOSPHOPEPTIDE-SPECIFIC ANTIBODIES THAT ARE ACTIVITY SPECIFIC; METHODS OF PRODUCTION AND ANTIBODY USES

Filed: 11/02/93

Interference with Epstein et al.

DECISION ON MOTIONS

Administrative Patent Judge,_____Dated,_____

FINAL DECISION

Board of Patent Appeals and Interferences, Adverse Dated, 5-29-03

Court,_____Dated,_____

REMARKS

This should be placed in each application or patent involved in interference in addition to the interference letters.

UNITED STATES PATENT AND TRADEMARK OFFICE

Commissioner for Patents
United States Patent and Trademark Office
P.O. Box 1450
Alexandria, VA 22313-1450
www.uspto.gov

In re Patent No. 5409839
Issue Date: April 25,1995
Application No. 08146256
Filed: November 1,1993
Attorney Docket No. IET202KFM

:
:DECISION GRANTING PETITION
:UNDER 37 CFR 1.378(c)
:

This is a decision on the electronic petition, filed May 9,2008 ,under 37 CFR 1.378(c) to accept the unintentionally delayed payment of the 11.5 year maintenance fee for the above-identified patent.

The petition is GRANTED.

The maintenance fee is accepted, and the above-identified patent reinstated as of May 9,2008 . This decision also constitutes notice that the fee has been accepted. An electronic copy of the petition and this decision has been created as an entry in an Image File Wrapper. Nevertheless, petitioner should print and retain an independent copy

Telephone inquires related to this electronic decision should be directed to the Electronic Business Center at 1-866-217-9197.

Under the Paperwork Reduction Act of 1995, no persons are required to respond to a collection of information unless it displays valid OMB control number.

PETITION TO ACCEPT UNINTENTIONALLY DELAYED PAYMENT OF MAINTENANCE FEE IN AN EXPIRED PATENT (37 CFR 1.378(c))

Patent Number	Issue Date (YYYY-MM-DD)	Application Number	Filing Date (YYYY-MM-DD)	Docket Number (if applicable)
5409839	1995-04-25	08146256	1993-11-01	IET-202

CAUTION: Maintenance fee (and surcharge, if any) payment must correctly identify: (1) the patent number and (2) the application number of the actual U.S. application leading to issuance of that patent to ensure the fee(s) is/are associated with the correct patent. 37 CFR 1.366(c) and (d).

SMALL ENTITY
☒ Patentee claims, or has previously claimed, small entity status. See 37 CFR 1.27.

LOSS OF ENTITLEMENT TO SMALL ENTITY STATUS
☐ Patentee is no longer entitled to small entity status. See 37 CFR 1.27(g)

NOT Small Entity			Small Entity		
	Fee	Code		Fee	Code
○	3 ½ year	(1551)	○	3 ½ year	(2551)
○	7 ½ year	(1552)	○	7 ½ year	(2552)
○	11 ½ year	(1553)	◉	11 ½ year	(2553)

SURCHARGE
The surcharge required by 37 CFR 1.20(i)(2) (Fee Code 1558) must be paid as a condition of accepting unintentionally delayed payment of the maintenance fee.

MAINTENANCE FEE (37 CFR 1.20(e)-(g))
The appropriate maintenance fee must be submitted with this petition.

STATEMENT
THE UNDERSIGNED CERTIFIES THAT THE DELAY IN PAYMENT OF THE MAINTENANCE FEE TO THIS PATENT WAS UNINTENTIONAL

PETITIONER(S) REQUEST THAT THE DELAYED PAYMENT OF THE MAINTENANCE FEE BE ACCEPTED AND THE PATENT REINSTATED

THIS PORTION MUST BE COMPLETED BY THE SIGNATORY OR SIGNATORIES

37 CFR 1.378(d) states: "Any petition under this section must be signed by an attorney or agent registered to practice before the Patent and Trademark Office, or by the patentee, the assignee, or other party in interest."

I certify, in accordance with 37 CFR 1.4(d)(4) that I am

◉ An attorney or agent registered to practice before the Patent and Trademark Office

○ A sole patentee

○ A joint patentee; I certify that I am authorized to sign this submission on behalf of all the other patentees.

○ A joint patentee; all of whom are signing this e-petition

○ The assignee of record of the entire interest

Patent Practitioner			
A signature of the applicant or representative is required in accordance with 37 CFR 1.33 and 10.18. Please see 37 CFR 1.4(d) for the form of the signature			
Signature	/Steven M. Hoffberg/	Date (YYYY-MM-DD)	2008-05-09
Name	Steven M. Hoffberg	Registration Number	33511

This collection of information is required by 37 CFR 1.378(c). The information is required to obtain or retain a benefit by the public which is to file (and by the USPTO to process) an application. Confidentiality is governed by 35 U.S.C. 122 and 37 CFR 1.11 and 1.14. This collection is estimated to take 1 hour to complete, including gathering, preparing, and submitting the completed application form to the USPTO. Time will vary depending upon the individual case. Any comments on the amount of time you require to complete this form and/ or suggestions for reducing this burden, should be sent to the Chief Information Officer, U.S. Patent and Trademark Office, U.S. Department of Commerce, P.O. Box 1450, Alexandria, VA 22313-1450. DO NOT SEND FEES OR COMPLETED FORMS TO THIS ADDRESS. **This form can only be used when in conjunction with EFS-Web. If this form is mailed to the USPTO, it may cause delays in reinstating the patent.**

Privacy Act Statement

The Privacy Act of 1974 (P.L. 93-579) requires that you be given certain information in connection with your submission of the attached form related to a patent application or patent. Accordingly, pursuant to the requirements of the Act, please be advised that: (1) the general authority for the collection of this information is 35 U.S.C. 2(b)(2); (2) furnishing of the information solicited is voluntary; and (3) the principal purpose for which the information is used by the U.S. Patent and Trademark Office is to process and/or examine your submission related to a patent application or patent. If you do not furnish the requested information, the U.S. Patent and Trademark Office may not be able to process and/or examine your submission, which may result in termination of proceedings or abandonment of the application or expiration of the patent.

The information provided by you in this form will be subject to the following routine uses:

1. The information on this form will be treated confidentially to the extent allowed under the Freedom of Information Act (5 U.S.C. 552) and the Privacy Act (5 U.S.C. 552a). Records from this system of records may be disclosed to the Department of Justice to determine whether the Freedom of Information Act requires disclosure of these record s.

2. A record from this system of records may be disclosed, as a routine use, in the course of presenting evidence to a court, magistrate, or administrative tribunal, including disclosures to opposing counsel in the course of settlement negotiations.

3. A record in this system of records may be disclosed, as a routine use, to a Member of Congress submitting a request involving an individual, to whom the record pertains, when the individual has requested assistance from the Member with respect to the subject matter of the record.

4. A record in this system of records may be disclosed, as a routine use, to a contractor of the Agency having need for the information in order to perform a contract. Recipients of information shall be required to comply with the requirements of the Privacy Act of 1974, as amended, pursuant to 5 U.S.C. 552a(m).

5. A record related to an International Application filed under the Patent Cooperation Treaty in this system of records may be disclosed, as a routine use, to the International Bureau of the World Intellectual Property Organization, pursuant to the Patent Cooperation Treaty.

6. A record in this system of records may be disclosed, as a routine use, to another federal agency for purposes of National Security review (35 U.S.C. 181) and for review pursuant to the Atomic Energy Act (42 U.S.C. 218(c)).

7. A record from this system of records may be disclosed, as a routine use, to the Administrator, General Services, or his/her designee, during an inspection of records conducted by GSA as part of that agency's responsibility to recommend improvements in records management practices and programs, under authority of 44 U.S.C. 2904 and 2906. Such disclosure shall be made in accordance with the GSA regulations governing inspection of records for this purpose, and any other relevant (i.e., GSA or Commerce) directive. Such disclosure shall not be used to make determinations about individuals.

8. A record from this system of records may be disclosed, as a routine use, to the public after either publication of the application pursuant to 35 U.S.C. 122(b) or issuance of a patent pursuant to 35 U.S.C. 151. Further, a record may be disclosed, subject to the limitations of 37 CFR 1.14, as a routine use, to the public if the record was filed in an application which became abandoned or in which the proceedings were terminated and which application is referenced by either a published application, an application open to public inspections or an issued patent.

9. A record from this system of records may be disclosed, as a routine use, to a Federal, State, or local law enforcement agency, if the USPTO becomes aware of a violation or potential violation of law or regulation.

UNITED STATES DEPARTMENT OF COMMERCE
Patent and Trademark Office
ASSISTANT SECRETARY AND COMMISSIONER OF
PATENTS AND TRADEMARKS
Washington, D.C. 20231

Paper No. 11

COPY MAILED

JUL 2 8 2000

SPECIAL PROGRAMS OFFICE
DAC FOR PATENTS

SAMUEL B. STONE
633 W. FIFTH STREET, SUITE 4700
LOS ANGELES, CA 90071

In re Patent No. 5417431
Issue Date: May 23, 1995
Application No. 08/147,139
Filed: November 3, 1993
Patentee(s) Adrian Gluck

ON PETITION

This is a decision on the petition under 37 CFR 1.378(c), filed June 6, 2000, to accept the delayed payment of a maintenance fee for the above-identified patent.

The petition is **GRANTED**.

The maintenance fee is hereby accepted and the above-identified patent is reinstated as of the mail date of this decision.

Telephone inquiries concerning this decision should be directed to Irvin Dingle at (703) 305-9282.

The patent file is being forwarded to Files Repository.

Irvin Dingle
Petitions Examiner
Office of Petitions
Office of the Deputy Assistant Commissioner
for Patent Policy and Projects

UNITED STATES PATENT AND TRADEMARK OFFICE

Commissioner for Patents
United States Patent and Trademark Office
P.O. Box 1450
Alexandria, VA 22313-1450
www.uspto.gov

Paper No. 16

WILLIAM R. ALLEN
WOOD HERRON & EVANS LLP
2700 CAREW TOWER
CINCINNATI, OH 45202-2917

COPY MAILED

MAY 07 2004

OFFICE OF PETITIONS

In re Application of :
David M. Brooks :
Application No. 08/147,941 :
Filed: November 5, 1993 :
Attorney Docket No. RMP27

NOTICE

This is a notice regarding your request for acceptance of a fee deficiency submission under 37 CFR 1.28. On September 1, 1998, the Court of Appeals for the Federal Circuit held that 37 CFR 1.28(c) is the sole provision governing the time for correction of the erroneous payment of the issue fee as a small entity. **See DH Technology v. Synergystex International, Inc. 154 F.3d 1333, 47 USPQ2d 1865 (Fed. Cir. Sept. 1, 1998).**

The Office no longer investigates or rejects original or reissue applications under 37 CFR 1.56. **1098 Off. Gaz. Pat. Office 502 (January 3, 1989)**. Therefore, nothing in this Notice is intended to imply that an investigation was done.

Your fee deficiency submission under 37 CFR 1.28 is hereby **ACCEPTED**.

Inquiries related to this communication should be directed to the Office of Petitions Staff at (703) 305-9285.

This file is being forwarded to the Files Repository.

Irvin Dingle
Petitions Examiner
Office of Petitions
Office of the Deputy Commissioner
for Patent Examination Policy

UNITED STATES PATENT AND TRADEMARK OFFICE

Commissioner for Patents
United States Patent and Trademark Office
P.O. Box 1450
Alexandria, VA 22313-1450
www.uspto.gov

In re Patent No. 5385113
Issue Date: January 31,1995
Application No. 08148095
Filed: November 5,1993
Attorney Docket No. HLL1

:
:DECISION GRANTING PETITION
:UNDER 37 CFR 1.378(c)
:

This is a decision on the electronic petition, filed April 21,2008 ,under 37 CFR 1.378(c) to accept the unintentionally delayed payment of the 11.5 year maintenance fee for the above-identified patent.

The petition is GRANTED.

The maintenance fee is accepted, and the above-identified patent reinstated as of April 21,2008 . This decision also constitutes notice that the fee has been accepted. An electronic copy of the petition and this decision has been created as an entry in an Image File Wrapper. Nevertheless, petitioner should print and retain an independent copy

Telephone inquires related to this electronic decision should be directed to the Electronic Business Center at 1-866-217-9197.

Under the Paperwork Reduction Act of 1995, no persons are required to respond to a collection of information unless it displays valid OMB control number.

PETITION TO ACCEPT UNINTENTIONALLY DELAYED PAYMENT OF MAINTENANCE FEE IN AN EXPIRED PATENT (37 CFR 1.378(c))

Patent Number	Issue Date (YYYY-MM-DD)	Application Number	Filing Date (YYYY-MM-DD)	Docket Number (if applicable)
5385113	1995-01-31	08/148,095	1993-11-05	

CAUTION: Maintenance fee (and surcharge, if any) payment must correctly identify: (1) the patent number and (2) the application number of the actual U.S. application leading to issuance of that patent to ensure the fee(s) is/are associated with the correct patent. 37 CFR 1.366(c) and (d).

SMALL ENTITY
☒ Patentee claims, or has previously claimed, small entity status. See 37 CFR 1.27.

LOSS OF ENTITLEMENT TO SMALL ENTITY STATUS
☐ Patentee is no longer entitled to small entity status. See 37 CFR 1.27(g)

NOT Small Entity			Small Entity		
	Fee	Code		Fee	Code
○	3 ½ year	(1551)	○	3 ½ year	(2551)
○	7 ½ year	(1552)	○	7 ½ year	(2552)
○	11 ½ year	(1553)	◉	11 ½ year	(2553)

SURCHARGE
The surcharge required by 37 CFR 1.20(i)(2) (Fee Code 1558) must be paid as a condition of accepting unintentionally delayed payment of the maintenance fee.

MAINTENANCE FEE (37 CFR 1.20(e)-(g))
The appropriate maintenance fee must be submitted with this petition.

STATEMENT
THE UNDERSIGNED CERTIFIES THAT THE DELAY IN PAYMENT OF THE MAINTENANCE FEE TO THIS PATENT WAS UNINTENTIONAL

PETITIONER(S) REQUEST THAT THE DELAYED PAYMENT OF THE MAINTENANCE FEE BE ACCEPTED AND THE PATENT REINSTATED

THIS PORTION MUST BE COMPLETED BY THE SIGNATORY OR SIGNATORIES

37 CFR 1.378(d) states: "Any petition under this section must be signed by an attorney or agent registered to practice before the Patent and Trademark Office, or by the patentee, the assignee, or other party in interest."

I certify, in accordance with 37 CFR 1.4(d)(4) that I am

◉ An attorney or agent registered to practice before the Patent and Trademark Office

○ A sole patentee

○ A joint patentee; I certify that I am authorized to sign this submission on behalf of all the other patentees.

○ A joint patentee; all of whom are signing this e-petition

○ The assignee of record of the entire interest

Patent Practitioner			
A signature of the applicant or representative is required in accordance with 37 CFR 1.33 and 10.18. Please see 37 CFR 1.4(d) for the form of the signature			
Signature	/carl a. ronald/	Date (YYYY-MM-DD)	2008-04-21
Name	Carl A. Ronald	Registration Number	43057

This collection of information is required by 37 CFR 1.378(c). The information is required to obtain or retain a benefit by the public which is to file (and by the USPTO to process) an application. Confidentiality is governed by 35 U.S.C. 122 and 37 CFR 1.11 and 1.14. This collection is estimated to take 1 hour to complete, including gathering, preparing, and submitting the completed application form to the USPTO. Time will vary depending upon the individual case. Any comments on the amount of time you require to complete this form and/ or suggestions for reducing this burden, should be sent to the Chief Information Officer, U.S. Patent and Trademark Office, U.S. Department of Commerce, P.O. Box 1450, Alexandria, VA 22313-1450. DO NOT SEND FEES OR COMPLETED FORMS TO THIS ADDRESS. **This form can only be used when in conjunction with EFS-Web. If this form is mailed to the USPTO, it may cause delays in reinstating the patent.**

Privacy Act Statement

The Privacy Act of 1974 (P.L. 93-579) requires that you be given certain information in connection with your submission of the attached form related to a patent application or patent. Accordingly, pursuant to the requirements of the Act, please be advised that: (1) the general authority for the collection of this information is 35 U.S.C. 2(b)(2); (2) furnishing of the information solicited is voluntary; and (3) the principal purpose for which the information is used by the U.S. Patent and Trademark Office is to process and/or examine your submission related to a patent application or patent. If you do not furnish the requested information, the U.S. Patent and Trademark Office may not be able to process and/or examine your submission, which may result in termination of proceedings or abandonment of the application or expiration of the patent.

The information provided by you in this form will be subject to the following routine uses:

1. The information on this form will be treated confidentially to the extent allowed under the Freedom of Information Act (5 U.S.C. 552) and the Privacy Act (5 U.S.C. 552a). Records from this system of records may be disclosed to the Department of Justice to determine whether the Freedom of Information Act requires disclosure of these record s.

2. A record from this system of records may be disclosed, as a routine use, in the course of presenting evidence to a court, magistrate, or administrative tribunal, including disclosures to opposing counsel in the course of settlement negotiations.

3. A record in this system of records may be disclosed, as a routine use, to a Member of Congress submitting a request involving an individual, to whom the record pertains, when the individual has requested assistance from the Member with respect to the subject matter of the record.

4. A record in this system of records may be disclosed, as a routine use, to a contractor of the Agency having need for the information in order to perform a contract. Recipients of information shall be required to comply with the requirements of the Privacy Act of 1974, as amended, pursuant to 5 U.S.C. 552a(m).

5. A record related to an International Application filed under the Patent Cooperation Treaty in this system of records may be disclosed, as a routine use, to the International Bureau of the World Intellectual Property Organization, pursuant to the Patent Cooperation Treaty.

6. A record in this system of records may be disclosed, as a routine use, to another federal agency for purposes of National Security review (35 U.S.C. 181) and for review pursuant to the Atomic Energy Act (42 U.S.C. 218(c)).

7. A record from this system of records may be disclosed, as a routine use, to the Administrator, General Services, or his/her designee, during an inspection of records conducted by GSA as part of that agency's responsibility to recommend improvements in records management practices and programs, under authority of 44 U.S.C. 2904 and 2906. Such disclosure shall be made in accordance with the GSA regulations governing inspection of records for this purpose, and any other relevant (i.e., GSA or Commerce) directive. Such disclosure shall not be used to make determinations about individuals.

8. A record from this system of records may be disclosed, as a routine use, to the public after either publication of the application pursuant to 35 U.S.C. 122(b) or issuance of a patent pursuant to 35 U.S.C. 151. Further, a record may be disclosed, subject to the limitations of 37 CFR 1.14, as a routine use, to the public if the record was filed in an application which became abandoned or in which the proceedings were terminated and which application is referenced by either a published application, an application open to public inspections or an issued patent.

9. A record from this system of records may be disclosed, as a routine use, to a Federal, State, or local law enforcement agency, if the USPTO becomes aware of a violation or potential violation of law or regulation.

Approved for use through 04/30/2009. OMB 0651-0016
U.S. Patent and Trademark Office: U.S. DEPARTMENT OF COMMERCE
Under the Paperwork Reduction Act of 1995, no persons are required to respond to a collection of information unless it displays valid OMB control number.

PETITION TO ACCEPT UNINTENTIONALLY DELAYED PAYMENT OF MAINTENANCE FEE IN AN EXPIRED PATENT (37 CFR 1.378(c))

Patent Number	Issue Date (YYYY-MM-DD)	Application Number	Filing Date (YYYY-MM-DD)	Docket Number (if applicable)
5591602	1997-01-07	08148215	1993-11-05	2142(209409)

CAUTION: Maintenance fee (and surcharge, if any) payment must correctly identify: (1) the patent number and (2) the application number of the actual U.S. application leading to issuance of that patent to ensure the fee(s) is/are associated with the correct patent. 37 CFR 1.366(c) and (d).

SMALL ENTITY
☒ Patentee claims, or has previously claimed, small entity status. See 37 CFR 1.27.

LOSS OF ENTITLEMENT TO SMALL ENTITY STATUS
☐ Patentee is no longer entitled to small entity status. See 37 CFR 1.27(g)

NOT Small Entity			Small Entity		
	Fee	Code		Fee	Code
○	3 ½ year	(1551)	○	3 ½ year	(2551)
○	7 ½ year	(1552)	○	7 ½ year	(2552)
○	11 ½ year	(1553)	◉	11 ½ year	(2553)

SURCHARGE
The surcharge required by 37 CFR 1.20(i)(2) (Fee Code 1558) must be paid as a condition of accepting unintentionally delayed payment of the maintenance fee.

MAINTENANCE FEE (37 CFR 1.20(e)-(g))
The appropriate maintenance fee must be submitted with this petition.

STATEMENT
THE UNDERSIGNED CERTIFIES THAT THE DELAY IN PAYMENT OF THE MAINTENANCE FEE TO THIS PATENT WAS UNINTENTIONAL

PETITIONER(S) REQUEST THAT THE DELAYED PAYMENT OF THE MAINTENANCE FEE BE ACCEPTED AND THE PATENT REINSTATED

THIS PORTION MUST BE COMPLETED BY THE SIGNATORY OR SIGNATORIES

37 CFR 1.378(d) states: "Any petition under this section must be signed by an attorney or agent registered to practice before the Patent and Trademark Office, or by the patentee, the assignee, or other party in interest."

I certify, in accordance with 37 CFR 1.4(d)(4) that I am

◉ An attorney or agent registered to practice before the Patent and Trademark Office

○ A sole patentee

○ A joint patentee; I certify that I am authorized to sign this submission on behalf of all the other patentees.

○ A joint patentee; all of whom are signing this e-petition

○ The assignee of record of the entire interest

Patent Practitioner			
A signature of the applicant or representative is required in accordance with 37 CFR 1.33 and 10.18. Please see 37 CFR 1.4(d) for the form of the signature			
Signature	/Matthew Beaudet/	Date (YYYY-MM-DD)	2009-01-14
Name	Matthew Beaudet	Registration Number	50649

This collection of information is required by 37 CFR 1.378(c). The information is required to obtain or retain a benefit by the public which is to file (and by the USPTO to process) an application. Confidentiality is governed by 35 U.S.C. 122 and 37 CFR 1.11 and 1.14. This collection is estimated to take 1 hour to complete, including gathering, preparing, and submitting the completed application form to the USPTO. Time will vary depending upon the individual case. Any comments on the amount of time you require to complete this form and/ or suggestions for reducing this burden, should be sent to the Chief Information Officer, U.S. Patent and Trademark Office, U.S. Department of Commerce, P.O. Box 1450, Alexandria, VA 22313-1450. DO NOT SEND FEES OR COMPLETED FORMS TO THIS ADDRESS. **This form can only be used when in conjunction with EFS-Web. If this form is mailed to the USPTO, it may cause delays in reinstating the patent.**

Privacy Act Statement

The Privacy Act of 1974 (P.L. 93-579) requires that you be given certain information in connection with your submission of the attached form related to a patent application or patent. Accordingly, pursuant to the requirements of the Act, please be advised that: (1) the general authority for the collection of this information is 35 U.S.C. 2(b)(2); (2) furnishing of the information solicited is voluntary; and (3) the principal purpose for which the information is used by the U.S. Patent and Trademark Office is to process and/or examine your submission related to a patent application or patent. If you do not furnish the requested information, the U.S. Patent and Trademark Office may not be able to process and/or examine your submission, which may result in termination of proceedings or abandonment of the application or expiration of the patent.

The information provided by you in this form will be subject to the following routine uses:

1. The information on this form will be treated confidentially to the extent allowed under the Freedom of Information Act (5 U.S.C. 552) and the Privacy Act (5 U.S.C. 552a). Records from this system of records may be disclosed to the Department of Justice to determine whether the Freedom of Information Act requires disclosure of these record s.

2. A record from this system of records may be disclosed, as a routine use, in the course of presenting evidence to a court, magistrate, or administrative tribunal, including disclosures to opposing counsel in the course of settlement negotiations.

3. A record in this system of records may be disclosed, as a routine use, to a Member of Congress submitting a request involving an individual, to whom the record pertains, when the individual has requested assistance from the Member with respect to the subject matter of the record.

4. A record in this system of records may be disclosed, as a routine use, to a contractor of the Agency having need for the information in order to perform a contract. Recipients of information shall be required to comply with the requirements of the Privacy Act of 1974, as amended, pursuant to 5 U.S.C. 552a(m).

5. A record related to an International Application filed under the Patent Cooperation Treaty in this system of records may be disclosed, as a routine use, to the International Bureau of the World Intellectual Property Organization, pursuant to the Patent Cooperation Treaty.

6. A record in this system of records may be disclosed, as a routine use, to another federal agency for purposes of National Security review (35 U.S.C. 181) and for review pursuant to the Atomic Energy Act (42 U.S.C. 218(c)).

7. A record from this system of records may be disclosed, as a routine use, to the Administrator, General Services, or his/her designee, during an inspection of records conducted by GSA as part of that agency's responsibility to recommend improvements in records management practices and programs, under authority of 44 U.S.C. 2904 and 2906. Such disclosure shall be made in accordance with the GSA regulations governing inspection of records for this purpose, and any other relevant (i.e., GSA or Commerce) directive. Such disclosure shall not be used to make determinations about individuals.

8. A record from this system of records may be disclosed, as a routine use, to the public after either publication of the application pursuant to 35 U.S.C. 122(b) or issuance of a patent pursuant to 35 U.S.C. 151. Further, a record may be disclosed, subject to the limitations of 37 CFR 1.14, as a routine use, to the public if the record was filed in an application which became abandoned or in which the proceedings were terminated and which application is referenced by either a published application, an application open to public inspections or an issued patent.

9. A record from this system of records may be disclosed, as a routine use, to a Federal, State, or local law enforcement agency, if the USPTO becomes aware of a violation or potential violation of law or regulation.

UNITED STATES PATENT AND TRADEMARK OFFICE

Commissioner for Patents
United States Patent and Trademark Office
P.O. Box 1450
Alexandria, VA 22313-1450
www.uspto.gov

In re Patent No. 5591602
Issue Date: January 7,1997
Application No. 08148215
Filed: November 5,1993
Attorney Docket No. OPIA:003

:
:DECISION GRANTING PETITION
:UNDER 37 CFR 1.378(c)
:

This is a decision on the electronic petition, filed January 14,2009 ,under 37 CFR 1.378(c) to accept the unintentionally delayed payment of the 11.5 year maintenance fee for the above-identified patent.

The petition is **GRANTED**.

The maintenance fee is accepted, and the above-identified patent reinstated as of January 14,2009 . This decision also constitutes notice that the fee has been accepted. An electronic copy of the petition and this decision has been created as an entry in the Image File Wrapper. Nevertheless, petitioner should print and retain an independent copy.

Telephone inquiries related to this electronic decision should be directed to the Electronic Business Center at 1-866-217-9197.

UNITED STATES PATENT AND TRADEMARK OFFICE

Commissioner for Patents
United States Patent and Trademark Office
P.O. Box 1450
Alexandria, VA 22313-1450
www.uspto.gov

Date : March 18, 2010

Patent No. : 5442628
Inventor : Anderson, Paul M. et al.
Patent Issued : August 15, 1995
Title : LOCAL AREA NETWORK DATA PROCESSING SYSTEM CONTAINING A QUAD :ELASTIC BUFFER AND LAYER MANAGEMENT (ELM) INTEGRATED CIRCUIT AND :METHOD OF SWITCHING

Re: Request for Certificate of Correction

Consideration has been given your request for the issuance of a certificate of correction for the above-identified patent.

Inspection of the application for the patent reveals that in connection with the alleged errors; the printed data in the letters patent with regard to applicants request has been determined to be in accordance with the records within the Patent and Trademark office. Accordingly, there being no fault on the part of the Patent and Trademark Office, it has no authority to a issue certificate of correction under the provisions of 35 U.S.C. 254 and Rule 322 of the Rules of Practice of the United States Patent and Trademark Office in Patent Cases.

In view of the foregoing applicants request in this matter is hereby denied.

To have request further considered, a request for reconsideration filed under 37 CFR 1.323 which includes the required Certificate of Corrrection fee of $100.00 or a reconsideration filing together with documentation in support of applicants request filed under 1.322 should be submitted. Required documentation may include acknowledgement of receipt .

Any telephone inquiry concerning this communication should be directed to Ms. A. Green at (703) 756-1541.

Mary Diggs, Supervisor
Decisions & Certificates
of Correction Branch
(703) 756-1580 or (703) 756- 1541

Freescale Semiconductor, Inc.
Law Department
7700 West Parmer Lane PL02
Austin, TX 78729

/arg

Under the Paperwork Reduction Act of 1995, no persons are required to respond to a collection of information unless it displays valid OMB control number.

PETITION TO ACCEPT UNINTENTIONALLY DELAYED PAYMENT OF MAINTENANCE FEE IN AN EXPIRED PATENT (37 CFR 1.378(c))

Patent Number	Issue Date (YYYY-MM-DD)	Application Number	Filing Date (YYYY-MM-DD)	Docket Number (if applicable)
5377736	1995-01-03	08154066	1993-11-18	30610.9

CAUTION: Maintenance fee (and surcharge, if any) payment must correctly identify: (1) the patent number and (2) the application number of the actual U.S. application leading to issuance of that patent to ensure the fee(s) is/are associated with the correct patent. 37 CFR 1.366(c) and (d).

SMALL ENTITY
☒ Patentee claims, or has previously claimed, small entity status. See 37 CFR 1.27.

LOSS OF ENTITLEMENT TO SMALL ENTITY STATUS
☐ Patentee is no longer entitled to small entity status. See 37 CFR 1.27(g)

NOT Small Entity			Small Entity		
	Fee	Code		Fee	Code
○	3 ½ year	(1551)	○	3 ½ year	(2551)
○	7 ½ year	(1552)	○	7 ½ year	(2552)
○	11 ½ year	(1553)	◉	11 ½ year	(2553)

SURCHARGE
The surcharge required by 37 CFR 1.20(i)(2) (Fee Code 1558) must be paid as a condition of accepting unintentionally delayed payment of the maintenance fee.

MAINTENANCE FEE (37 CFR 1.20(e)-(g))
The appropriate maintenance fee must be submitted with this petition.

STATEMENT
THE UNDERSIGNED CERTIFIES THAT THE DELAY IN PAYMENT OF THE MAINTENANCE FEE TO THIS PATENT WAS UNINTENTIONAL

PETITIONER(S) REQUEST THAT THE DELAYED PAYMENT OF THE MAINTENANCE FEE BE ACCEPTED AND THE PATENT REINSTATED

THIS PORTION MUST BE COMPLETED BY THE SIGNATORY OR SIGNATORIES

37 CFR 1.378(d) states: "Any petition under this section must be signed by an attorney or agent registered to practice before the Patent and Trademark Office, or by the patentee, the assignee, or other party in interest."

I certify, in accordance with 37 CFR 1.4(d)(4) that I am

◉ An attorney or agent registered to practice before the Patent and Trademark Office

○ A sole patentee

○ A joint patentee; I certify that I am authorized to sign this submission on behalf of all the other patentees.

○ A joint patentee; all of whom are signing this e-petition

○ The assignee of record of the entire interest

Patent Practitioner			
A signature of the applicant or representative is required in accordance with 37 CFR 1.33 and 10.18. Please see 37 CFR 1.4(d) for the form of the signature			
Signature	/dapizarro/	Date (YYYY-MM-DD)	2007-08-21
Name	Derrick A. Pizarro	Registration Number	52126

This collection of information is required by 37 CFR 1.378(c). The information is required to obtain or retain a benefit by the public which is to file (and by the USPTO to process) an application. Confidentiality is governed by 35 U.S.C. 122 and 37 CFR 1.11 and 1.14. This collection is estimated to take 1 hour to complete, including gathering, preparing, and submitting the completed application form to the USPTO. Time will vary depending upon the individual case. Any comments on the amount of time you require to complete this form and/ or suggestions for reducing this burden, should be sent to the Chief Information Officer, U.S. Patent and Trademark Office, U.S. Department of Commerce, P.O. Box 1450, Alexandria, VA 22313-1450. DO NOT SEND FEES OR COMPLETED FORMS TO THIS ADDRESS. **This form can only be used when in conjunction with EFS-Web. If this form is mailed to the USPTO, it may cause delays in reinstating the patent.**

Privacy Act Statement

The Privacy Act of 1974 (P.L. 93-579) requires that you be given certain information in connection with your submission of the attached form related to a patent application or patent. Accordingly, pursuant to the requirements of the Act, please be advised that: (1) the general authority for the collection of this information is 35 U.S.C. 2(b)(2); (2) furnishing of the information solicited is voluntary; and (3) the principal purpose for which the information is used by the U.S. Patent and Trademark Office is to process and/or examine your submission related to a patent application or patent. If you do not furnish the requested information, the U.S. Patent and Trademark Office may not be able to process and/or examine your submission, which may result in termination of proceedings or abandonment of the application or expiration of the patent.

The information provided by you in this form will be subject to the following routine uses:

1. The information on this form will be treated confidentially to the extent allowed under the Freedom of Information Act (5 U.S.C. 552) and the Privacy Act (5 U.S.C. 552a). Records from this system of records may be disclosed to the Department of Justice to determine whether the Freedom of Information Act requires disclosure of these record s.

2. A record from this system of records may be disclosed, as a routine use, in the course of presenting evidence to a court, magistrate, or administrative tribunal, including disclosures to opposing counsel in the course of settlement negotiations.

3. A record in this system of records may be disclosed, as a routine use, to a Member of Congress submitting a request involving an individual, to whom the record pertains, when the individual has requested assistance from the Member with respect to the subject matter of the record.

4. A record in this system of records may be disclosed, as a routine use, to a contractor of the Agency having need for the information in order to perform a contract. Recipients of information shall be required to comply with the requirements of the Privacy Act of 1974, as amended, pursuant to 5 U.S.C. 552a(m).

5. A record related to an International Application filed under the Patent Cooperation Treaty in this system of records may be disclosed, as a routine use, to the International Bureau of the World Intellectual Property Organization, pursuant to the Patent Cooperation Treaty.

6. A record in this system of records may be disclosed, as a routine use, to another federal agency for purposes of National Security review (35 U.S.C. 181) and for review pursuant to the Atomic Energy Act (42 U.S.C. 218(c)).

7. A record from this system of records may be disclosed, as a routine use, to the Administrator, General Services, or his/her designee, during an inspection of records conducted by GSA as part of that agency's responsibility to recommend improvements in records management practices and programs, under authority of 44 U.S.C. 2904 and 2906. Such disclosure shall be made in accordance with the GSA regulations governing inspection of records for this purpose, and any other relevant (i.e., GSA or Commerce) directive. Such disclosure shall not be used to make determinations about individuals.

8. A record from this system of records may be disclosed, as a routine use, to the public after either publication of the application pursuant to 35 U.S.C. 122(b) or issuance of a patent pursuant to 35 U.S.C. 151. Further, a record may be disclosed, subject to the limitations of 37 CFR 1.14, as a routine use, to the public if the record was filed in an application which became abandoned or in which the proceedings were terminated and which application is referenced by either a published application, an application open to public inspections or an issued patent.

9. A record from this system of records may be disclosed, as a routine use, to a Federal, State, or local law enforcement agency, if the USPTO becomes aware of a violation or potential violation of law or regulation.

UNITED STATES PATENT AND TRADEMARK OFFICE

Commissioner for Patents
United States Patent and Trademark Office
P.O. Box 1450
Alexandria, VA 22313-1450
www.uspto.gov

In re Patent No. 5377736
Issue Date: January 3,1995
Application No. 08154066
Filed: November 18,1993
Attorney Docket No. D5590

:
:DECISION GRANTING PETITION
:UNDER 37 CFR 1.378(c)
:

This is a decision on the electronic petition, filed August 22,2007 ,under 37 CFR 1.378(c) to accept the unintentionally delayed payment of the 11.5 year maintenance fee for the above-identified patent.

The petition is GRANTED.

The maintenance fee is accepted, and the above-identified patent reinstated as of August 22,2007 . This decision also constitutes notice that the fee has been accepted. An electronic copy of the petition and this decision has been created as an entry in an Image File Wrapper. Nevertheless, petitioner should print and retain an independent copy

Telephone inquires related to this electronic decision should be directed to the Electronic Business Center at 1-866-217-9197.

UNITED STATES PATENT AND TRADEMARK OFFICE

Commissioner for Patents
United States Patent and Trademark Office
P.O. Box 1450
Alexandria, VA 22313-1450
www.uspto.gov

HONEYWELL INTELLECTUAL PROPERTY INC
PATENT SERVICES
101 COLUMBIA DRIVE
P O BOX 2245 MAIL STOP AB/2B
MORRISTOWN NJ 07962

COPY MAILED

AUG 1 4 2008

OFFICE OF PETITIONS

In re Application of
Ronald G. ABBOTT et al.
Application No. 08/155,266
Filed: November 22, 1993
Attorney Docket No. **33045US2**

DECISION ON PETITION

This is a decision on the petition under the unintentional provisions of 37 CFR 1.137(b), filed May 08, 2001, to revive the above-identified application.

The petition is **GRANTED**.

The application became abandoned for failure to submit formal drawings in a timely manner in reply to the Notice of Allowability, mailed September 22, 2000, which set a period for reply of three (3) months. Accordingly, this application became abandoned on December 23, 2000.

The petition satisfies the requirements of 37 CFR 1.137(b) in that petitioner has supplied (1) the reply in the form of formal drawings, (2) the petition fee of $1240, and (3) a proper statement of unintentional delay. Accordingly, the reply to the Notice of Allowability of September 22, 2000 is accepted as having been unintentionally delayed.

The terminal disclaimer is accepted and has been made of record. The power of attorney filed by the assignee on March 13, 2008 has been accepted and made of record.

Telephone inquiries concerning this decision should be directed to Tredelle Jackson at (571) 272-2783.

This application is being referred to the Office of Data Management for processing into a patent.

Ramesh Krishnamurthy

Ramesh Krishnamurthy
Petitions Examiner
Office of Petitions

IN THE UNITED STATES PATENT AND TRADEMARK OFFICE

In re Application of: Ronald G. Abbott, Ralph P. Williams, Marvin M. Johnson and John W. Vanderveen

Serial No.: 08/155,266 Group Art Unit: 1764

Filed: November 22, 1993 Examiner: W. Griffin

For: ISOPARAFFIN-OLEFIN ALKYLATION

PETITION UNDER 37 C.F.R.§ 1.137(b)

Assistant Commissioner for Patents
Box DAC
Washington, D.C. 20231

Sir:

Pursuant to 35 C.F.R. § 1.137(b), applicants petition the Commissioner to revive the above-identified application and pass it into issuance. The above-identified application was abandoned on March 23, 2001 because of failure to timely file new formal drawings as required in the Notice of Allowability.

This Petition is accompanied by:

(1) Petition Fee

This Petition is accompanied by the fee for revival of an unintentionally abandoned application under 37 C.F.R. § 1.17 (m).

(2) Reply

This Petition is accompanied by the new formal drawings as required in the Notice of Allowability.

The issue fee has been paid previously on October 11, 2000.

(3) Terminal Disclaimer with disclaimer fee. A terminal disclaimer (and disclaimer fee under 37 C.F.R.1.20 (d)) disclaiming the required period of time is enclosed herewith.

(4) Statement.

The entire delay in filing the required reply from the due date for the required reply until the filing of a grantable petition under 37 C.F.R. 1.137(b) was unintentional. think its good

The undersigned, Jeffrey R. Anderson, certifies that the delay in submitting the new formal drawings was inadvertent and wholly unintentional.

Respectfully submitted

RICHMOND, HITCHCOCK,
FISH & DOLLAR

By Jeffrey R. Anderson
Jeffrey R. Anderson
Registration No. 42,263

JRA/cb
RICHMOND, HITCHCOCK,
FISH & DOLLAR
P.O. Box 2443
Bartlesville, Oklahoma 74005
1-918-661-9607

CERTIFICATE OF MAILING

I hereby certify that this correspondence is being deposited with the United States Postal Service as first class mail in an envelope addressed to: Assistant Commissioner for Patents, Washington, D.C. 20231, on May 8, 2001 (Date)

Jeffrey R. Anderson
Jeffrey R. Anderson

33045US2
Serial No. 08/155,266

IN THE UNITED STATES PATENT AND TRADEMARK OFFICE

In re Application of: Ronald G. Abbott, Ralph P. Williams, Marvin M. Johnson and John W. Vanderveen

Serial No.: 08/155,266 Group Art Unit: 1764

Filed: November 22, 1993 Examiner: W. Griffin

For: ISOPARAFFIN-OLEFIN ALKYLATION

LETTER

Assistant Commissioner for Patents
Box DAC
Washington, D.C. 20231

Sir:

Attached hereto for filing in the United States Patent and Trademark Office is a Terminal Disclaimer.

Authorization is hereby granted to charge Deposit Account 16-1575 in the appropriate amount under 37 C.F.R. 1.20 (d) for the attached Terminal Disclaimer. The Commissioner is hereby authorized to charge any additional fees which may be required under 37 C.F.R.1.16, 37 C.F.R. 1.17 and C.F.R. 1.18, or credit any overpayment to Deposit Account 16-1575.

Respectfully submitted

RICHMOND, HITCHCOCK,
FISH & DOLLAR

By Jeffrey R. Anderson
Jeffrey R. Anderson
Registration No. 42,263

JRA/cb
RICHMOND, HITCHCOCK,
FISH & DOLLAR
P.O. Box 2443
Bartlesville, Oklahoma 74005
1-918-661-9607

CERTIFICATE OF MAILING

I hereby certify that this correspondence is being deposited with the United States Postal Service as first class mail in an envelope addressed to: Assistant Commissioner for Patents, Washington, D.C. 20231, on

May 8, 2001
(Date)

Jeffrey R. Anderson
Jeffrey R. Anderson

PTO/SB/63 (10-00)
Approved for use through 10/31/2002. OMB 0651-0031
U.S. Patent and Trademark Office; U. S. DEPARTMENT OF COMMERCE
Under the Paperwork Reduction Act of 1995, no persons are required to respond to a collection of information unless it displays a valid OMB control number.

TERMINAL DISCLAIMER TO ACCOMPANY PETITION

Docket Number (Optional)

In re Application of: Ronald G. Abbott, Ralph P. Williams, Marvin M. Johnson and John W. Vanderveen
Name:

Application Number: 08/155,266
Filed: November 22, 1993

For: ISOPARAFFIN-OLEFIN ALKYLATION

The owner*, Phillips Petroleum Co. of 100 percent interest in the above-identified application hereby disclaims a terminal part of the term of any patent granted the above-identified application equivalent to: (1) if the above-identified application is a design application, the period of abandonment of the above-identified application, and (2) if the above-identified application is a utility or plant application, the lesser of: (a) the period of abandonment of the application; or (b) the period extending beyond twenty years from the date on which the above-identified application was filed in the United States or, if the application contains a specific reference to an earlier filed application(s) under 35 U.S.C. 120, 121, or 365(c), from the date on which the earliest such application was filed. This disclaimer also applies to any patent granted on a utility or plant application filed before June 8, 1995, or a design application, that contains a specific reference under 35 U.S.C. 120, 121, or 365(c) to the above-identified application. This disclaimer is binding upon the grantee, and its successors or assigns.

Check either box 1 or 2 below, if appropriate.

1. ☐ For submissions on behalf of an organization (e.g., corporation, partnership, university, government agency, etc.), the undersigned is empowered to act on behalf of the organization.

2. ☒ The undersigned is an attorney or agent of record.

Allen W Richmond — Signature
May 8, 2001 — Date

Allen W. Richmond
Typed or printed name

☒ Terminal disclaimer fee under 37 CFR 1.20(d) included.

WARNING: Information on this form may become public. Credit card information should not be included on this form. Provide credit card information and authorization on PTO-2038.

* Statement under 37 CFR 3.73(b) is required if terminal disclaimer is signed by the assignee (owner). Form PTO/SB/96 may be used for making this certification. See MPEP § 324.

Burden Hour Statement: This form is estimated to take 0.2 hours to complete. Time will vary depending upon the needs of the individual case. Any comments on the amount of time you are required to complete this form should be sent to the Chief Information Officer, U.S. Patent and Trademark Office, Washington, DC 20231. DO NOT SEND FEES OR COMPLETED FORMS TO THIS ADDRESS. SEND TO: Assistant Commissioner for Patents, Washington, DC 20231.

RAM Fee History Query

Revenue Accounting and Management

Name/Number: 08155266 Total Records Found: 11

Start Date: Any Date End Date: Any Date

Accounting Date	Sequence Num.	Fee Type	Fee Code	Fee Amount	Mailroom Date	Payment Method
02/05/2008	00022838	4	8021	$2,080.00	02/05/2008	DA 011125
05/15/2001	00000175	1	141	$1,240.00	05/14/2001	DA 161575
05/15/2001	00000176	1	148	$110.00	05/14/2001	DA 161575
10/18/2000	00000003	1	142	$1,240.00	10/17/2000	DA 161575 Issue
10/18/2000	00000004	1	561	$30.00	10/17/2000	DA 161575
07/28/2000	00000006	1	102	$234.00	07/18/2000	DA 161575
07/28/2000	00000007	1	103	$630.00	07/18/2000	DA 161575
03/15/2000	00000001	1	103	$72.00	03/08/2000	DA 161575
03/10/2000	00000130	1	115	$110.00	03/08/2000	DA 161575
12/14/1994	01406201	1	119	$280.00	12/13/1994	DA 161575
12/14/1994	01406301	1	120	$280.00	12/13/1994	DA 161575

PTO/SB/66 (03-09)
Approved for use through 03/31/2012. OMB 0651-0016
U.S. Patent and Trademark Office: U.S. DEPARTMENT OF COMMERCE
Under the Paperwork Reduction Act of 1995, no persons are required to respond to a collection of information unless it displays valid OMB control number.

PETITION TO ACCEPT UNINTENTIONALLY DELAYED PAYMENT OF MAINTENANCE FEE IN AN EXPIRED PATENT (37 CFR 1.378(c))

Patent Number	Issue Date (YYYY-MM-DD)	Application Number	Filing Date (YYYY-MM-DD)	Docket Number (if applicable)
5589211	1996-12-31	08156273	1993-11-22	2693-002-03

CAUTION: Maintenance fee (and surcharge, if any) payment must correctly identify: (1) the patent number and (2) the application number of the actual U.S. application leading to issuance of that patent to ensure the fee(s) is/are associated with the correct patent. 37 CFR 1.366(c) and (d).

SMALL ENTITY
☐ Patentee claims, or has previously claimed, small entity status. See 37 CFR 1.27.

LOSS OF ENTITLEMENT TO SMALL ENTITY STATUS
☒ Patentee is no longer entitled to small entity status. See 37 CFR 1.27(g)

NOT Small Entity		Small Entity	
Fee	Code	Fee	Code
○ 3 ½ year	(1551)	○ 3 ½ year	(2551)
○ 7 ½ year	(1552)	○ 7 ½ year	(2552)
◉ 11 ½ year	(1553)	○ 11 ½ year	(2553)

SURCHARGE
The surcharge required by 37 CFR 1.20(i)(2) (Fee Code 1558) must be paid as a condition of accepting unintentionally delayed payment of the maintenance fee.

MAINTENANCE FEE (37 CFR 1.20(e)-(g))
The appropriate maintenance fee must be submitted with this petition.

STATEMENT
THE UNDERSIGNED CERTIFIES THAT THE DELAY IN PAYMENT OF THE MAINTENANCE FEE TO THIS PATENT WAS UNINTENTIONAL

PETITIONER(S) REQUEST THAT THE DELAYED PAYMENT OF THE MAINTENANCE FEE BE ACCEPTED AND THE PATENT REINSTATED

THIS PORTION MUST BE COMPLETED BY THE SIGNATORY OR SIGNATORIES

37 CFR 1.378(d) states: "Any petition under this section must be signed by an attorney or agent registered to practice before the Patent and Trademark Office, or by the patentee, the assignee, or other party in interest."

I certify, in accordance with 37 CFR 1.4(d)(4) that I am

◉ An attorney or agent registered to practice before the Patent and Trademark Office

○ A sole patentee

○ A joint patentee; I certify that I am authorized to sign this submission on behalf of all the other patentees.

○ A joint patentee; all of whom are signing this e-petition

○ The assignee of record of the entire interest

Patent Practitioner			
A signature of the applicant or representative is required in accordance with 37 CFR 1.33 and 10.18. Please see 37 CFR 1.4(d) for the form of the signature			
Signature	/Joshua King/	Date (YYYY-MM-DD)	2009-11-18
Name	Joshua King	Registration Number	35570

This collection of information is required by 37 CFR 1.378(c). The information is required to obtain or retain a benefit by the public which is to file (and by the USPTO to process) an application. Confidentiality is governed by 35 U.S.C. 122 and 37 CFR 1.11 and 1.14. This collection is estimated to take 1 hour to complete, including gathering, preparing, and submitting the completed application form to the USPTO. Time will vary depending upon the individual case. Any comments on the amount of time you require to complete this form and/ or suggestions for reducing this burden, should be sent to the Chief Information Officer, U.S. Patent and Trademark Office, U.S. Department of Commerce, P.O. Box 1450, Alexandria, VA 22313-1450. DO NOT SEND FEES OR COMPLETED FORMS TO THIS ADDRESS. **This form can only be used when in conjunction with EFS-Web. If this form is mailed to the USPTO, it may cause delays in reinstating the patent.**

Privacy Act Statement

The Privacy Act of 1974 (P.L. 93-579) requires that you be given certain information in connection with your submission of the attached form related to a patent application or patent. Accordingly, pursuant to the requirements of the Act, please be advised that: (1) the general authority for the collection of this information is 35 U.S.C. 2(b)(2); (2) furnishing of the information solicited is voluntary; and (3) the principal purpose for which the information is used by the U.S. Patent and Trademark Office is to process and/or examine your submission related to a patent application or patent. If you do not furnish the requested information, the U.S. Patent and Trademark Office may not be able to process and/or examine your submission, which may result in termination of proceedings or abandonment of the application or expiration of the patent.

The information provided by you in this form will be subject to the following routine uses:

1. The information on this form will be treated confidentially to the extent allowed under the Freedom of Information Act (5 U.S.C. 552) and the Privacy Act (5 U.S.C. 552a). Records from this system of records may be disclosed to the Department of Justice to determine whether the Freedom of Information Act requires disclosure of these records.

2. A record from this system of records may be disclosed, as a routine use, in the course of presenting evidence to a court, magistrate, or administrative tribunal, including disclosures to opposing counsel in the course of settlement negotiations.

3. A record in this system of records may be disclosed, as a routine use, to a Member of Congress submitting a request involving an individual, to whom the record pertains, when the individual has requested assistance from the Member with respect to the subject matter of the record.

4. A record in this system of records may be disclosed, as a routine use, to a contractor of the Agency having need for the information in order to perform a contract. Recipients of information shall be required to comply with the requirements of the Privacy Act of 1974, as amended, pursuant to 5 U.S.C. 552a(m).

5. A record related to an International Application filed under the Patent Cooperation Treaty in this system of records may be disclosed, as a routine use, to the International Bureau of the World Intellectual Property Organization, pursuant to the Patent Cooperation Treaty.

6. A record in this system of records may be disclosed, as a routine use, to another federal agency for purposes of National Security review (35 U.S.C. 181) and for review pursuant to the Atomic Energy Act (42 U.S.C. 218(c)).

7. A record from this system of records may be disclosed, as a routine use, to the Administrator, General Services, or his/her designee, during an inspection of records conducted by GSA as part of that agency's responsibility to recommend improvements in records management practices and programs, under authority of 44 U.S.C. 2904 and 2906. Such disclosure shall be made in accordance with the GSA regulations governing inspection of records for this purpose, and any other relevant (i.e., GSA or Commerce) directive. Such disclosure shall not be used to make determinations about individuals.

8. A record from this system of records may be disclosed, as a routine use, to the public after either publication of the application pursuant to 35 U.S.C. 122(b) or issuance of a patent pursuant to 35 U.S.C. 151. Further, a record may be disclosed, subject to the limitations of 37 CFR 1.14, as a routine use, to the public if the record was filed in an application which became abandoned or in which the proceedings were terminated and which application is referenced by either a published application, an application open to public inspections or an issued patent.

9. A record from this system of records may be disclosed, as a routine use, to a Federal, State, or local law enforcement agency, if the USPTO becomes aware of a violation or potential violation of law or regulation.

UNITED STATES PATENT AND TRADEMARK OFFICE

Commissioner for Patents
United States Patent and Trademark Office
P.O. Box 1450
Alexandria, VA 22313-1450
www.uspto.gov

In re Patent No. 5589211
Issue Date: December 31,1996
Application No. 08156273
Filed: November 22,1993
Attorney Docket No. 2035

:
:DECISION GRANTING PETITION
:UNDER 37 CFR 1.378(c)
:

This is a decision on the electronic petition, filed November 18,2009 ,under 37 CFR 1.378(c) to accept the unintentionally delayed payment of the 11.5 year maintenance fee for the above-identified patent.

The petition is **GRANTED**.

The maintenance fee is accepted, and the above-identified patent reinstated as of November 18,2009 . This decision also constitutes notice that the fee has been accepted. An electronic copy of the petition and this decision has been created as an entry in the Image File Wrapper. Nevertheless, petitioner should print and retain an independent copy.

Telephone inquiries related to this electronic decision should be directed to the Electronic Business Center at 1-866-217-9197.

Under the Paperwork Reduction Act of 1995, no persons are required to respond to a collection of information unless it displays valid OMB control number.

PETITION TO ACCEPT UNINTENTIONALLY DELAYED PAYMENT OF MAINTENANCE FEE IN AN EXPIRED PATENT (37 CFR 1.378(c))

Patent Number	Issue Date (YYYY-MM-DD)	Application Number	Filing Date (YYYY-MM-DD)	Docket Number (if applicable)
5,413,364	1995-05-09	08/156,379	1993-11-22	101339.112335

CAUTION: Maintenance fee (and surcharge, if any) payment must correctly identify: (1) the patent number and (2) the application number of the actual U.S. application leading to issuance of that patent to ensure the fee(s) is/are associated with the correct patent. 37 CFR 1.366(c) and (d).

SMALL ENTITY
☒ Patentee claims, or has previously claimed, small entity status. See 37 CFR 1.27.

LOSS OF ENTITLEMENT TO SMALL ENTITY STATUS
☐ Patentee is no longer entitled to small entity status. See 37 CFR 1.27(g)

NOT Small Entity			Small Entity		
	Fee	Code		Fee	Code
○	3 ½ year	(1551)	○	3 ½ year	(2551)
○	7 ½ year	(1552)	○	7 ½ year	(2552)
○	11 ½ year	(1553)	◉	11 ½ year	(2553)

SURCHARGE
The surcharge required by 37 CFR 1.20(i)(2) (Fee Code 1558) must be paid as a condition of accepting unintentionally delayed payment of the maintenance fee.

MAINTENANCE FEE (37 CFR 1.20(e)-(g))
The appropriate maintenance fee must be submitted with this petition.

STATEMENT
THE UNDERSIGNED CERTIFIES THAT THE DELAY IN PAYMENT OF THE MAINTENANCE FEE TO THIS PATENT WAS UNINTENTIONAL

PETITIONER(S) REQUEST THAT THE DELAYED PAYMENT OF THE MAINTENANCE FEE BE ACCEPTED AND THE PATENT REINSTATED

THIS PORTION MUST BE COMPLETED BY THE SIGNATORY OR SIGNATORIES

37 CFR 1.378(d) states: "Any petition under this section must be signed by an attorney or agent registered to practice before the Patent and Trademark Office, or by the patentee, the assignee, or other party in interest."

I certify, in accordance with 37 CFR 1.4(d)(4) that I am

◉ An attorney or agent registered to practice before the Patent and Trademark Office

○ A sole patentee

○ A joint patentee; I certify that I am authorized to sign this submission on behalf of all the other patentees.

○ A joint patentee; all of whom are signing this e-petition

○ The assignee of record of the entire interest

Patent Practitioner			
A signature of the applicant or representative is required in accordance with 37 CFR 1.33 and 10.18. Please see 37 CFR 1.4(d) for the form of the signature			
Signature	/David J. Clement/	Date (YYYY-MM-DD)	2007-08-27
Name	David J. Clement	Registration Number	44082

This collection of information is required by 37 CFR 1.378(c). The information is required to obtain or retain a benefit by the public which is to file (and by the USPTO to process) an application. Confidentiality is governed by 35 U.S.C. 122 and 37 CFR 1.11 and 1.14. This collection is estimated to take 1 hour to complete, including gathering, preparing, and submitting the completed application form to the USPTO. Time will vary depending upon the individual case. Any comments on the amount of time you require to complete this form and/ or suggestions for reducing this burden, should be sent to the Chief Information Officer, U.S. Patent and Trademark Office, U.S. Department of Commerce, P.O. Box 1450, Alexandria, VA 22313-1450. DO NOT SEND FEES OR COMPLETED FORMS TO THIS ADDRESS. **This form can only be used when in conjunction with EFS-Web. If this form is mailed to the USPTO, it may cause delays in reinstating the patent.**

Privacy Act Statement

The Privacy Act of 1974 (P.L. 93-579) requires that you be given certain information in connection with your submission of the attached form related to a patent application or patent. Accordingly, pursuant to the requirements of the Act, please be advised that: (1) the general authority for the collection of this information is 35 U.S.C. 2(b)(2); (2) furnishing of the information solicited is voluntary; and (3) the principal purpose for which the information is used by the U.S. Patent and Trademark Office is to process and/or examine your submission related to a patent application or patent. If you do not furnish the requested information, the U.S. Patent and Trademark Office may not be able to process and/or examine your submission, which may result in termination of proceedings or abandonment of the application or expiration of the patent.

The information provided by you in this form will be subject to the following routine uses:

1. The information on this form will be treated confidentially to the extent allowed under the Freedom of Information Act (5 U.S.C. 552) and the Privacy Act (5 U.S.C. 552a). Records from this system of records may be disclosed to the Department of Justice to determine whether the Freedom of Information Act requires disclosure of these record s.

2. A record from this system of records may be disclosed, as a routine use, in the course of presenting evidence to a court, magistrate, or administrative tribunal, including disclosures to opposing counsel in the course of settlement negotiations.

3. A record in this system of records may be disclosed, as a routine use, to a Member of Congress submitting a request involving an individual, to whom the record pertains, when the individual has requested assistance from the Member with respect to the subject matter of the record.

4. A record in this system of records may be disclosed, as a routine use, to a contractor of the Agency having need for the information in order to perform a contract. Recipients of information shall be required to comply with the requirements of the Privacy Act of 1974, as amended, pursuant to 5 U.S.C. 552a(m).

5. A record related to an International Application filed under the Patent Cooperation Treaty in this system of records may be disclosed, as a routine use, to the International Bureau of the World Intellectual Property Organization, pursuant to the Patent Cooperation Treaty.

6. A record in this system of records may be disclosed, as a routine use, to another federal agency for purposes of National Security review (35 U.S.C. 181) and for review pursuant to the Atomic Energy Act (42 U.S.C. 218(c)).

7. A record from this system of records may be disclosed, as a routine use, to the Administrator, General Services, or his/her designee, during an inspection of records conducted by GSA as part of that agency's responsibility to recommend improvements in records management practices and programs, under authority of 44 U.S.C. 2904 and 2906. Such disclosure shall be made in accordance with the GSA regulations governing inspection of records for this purpose, and any other relevant (i.e., GSA or Commerce) directive. Such disclosure shall not be used to make determinations about individuals.

8. A record from this system of records may be disclosed, as a routine use, to the public after either publication of the application pursuant to 35 U.S.C. 122(b) or issuance of a patent pursuant to 35 U.S.C. 151. Further, a record may be disclosed, subject to the limitations of 37 CFR 1.14, as a routine use, to the public if the record was filed in an application which became abandoned or in which the proceedings were terminated and which application is referenced by either a published application, an application open to public inspections or an issued patent.

9. A record from this system of records may be disclosed, as a routine use, to a Federal, State, or local law enforcement agency, if the USPTO becomes aware of a violation or potential violation of law or regulation.

UNITED STATES PATENT AND TRADEMARK OFFICE

Commissioner for Patents
United States Patent and Trademark Office
P.O. Box 1450
Alexandria, VA 22313-1450
www.uspto.gov

In re Patent No. 5413364
Issue Date: May 9,1995
Application No. 08156379
Filed: November 22,1993
Attorney Docket No. P666

:
:DECISION GRANTING PETITION
:UNDER 37 CFR 1.378(c)
:

This is a decision on the electronic petition, filed August 27,2007 ,under 37 CFR 1.378(c) to accept the unintentionally delayed payment of the 11.5 year maintenance fee for the above-identified patent.

The petition is GRANTED.

The maintenance fee is accepted, and the above-identified patent reinstated as of August 27,2007 . This decision also constitutes notice that the fee has been accepted. An electronic copy of the petition and this decision has been created as an entry in an Image File Wrapper. Nevertheless, petitioner should print and retain an independent copy

Telephone inquires related to this electronic decision should be directed to the Electronic Business Center at 1-866-217-9197.