BEST AVAILABLE COPY

UNITED STATES DEPARTMENT OF COMMERCE
Patent and Trademark Office
ASSISTANT SECRETARY AND COMMISSIONER
OF PATENTS AND TRADEMARKS
Washington, D.C. 20231

OIPE JC90
MAY 0 2 2000
PATENT & TRADEMARK OFFICE

Response to Decision 2-1-00

Paper No. 11

COPY MAILED
DEC 0 1 1999
SPECIAL PROGRAMS OFFICE
DAC FOR PATENTS

Oblon Spivak McClelland Maier & Neustadt
1755 Jefferson Davis Highway
Fourth Floor
Arlington VA 22202

RECEIVED
MAY 0 4 2000
TECHNOLOGY CENTER 2800

In re Application of
Mats Leijon, et al
Application No. 09/147,325
Filed: February 17, 1999
Attorney Docket No. 9847-0001-6X

: RESPONSE TO PETITION UNDER 37 CFR 1.182 SEEKING SPECIAL TREATMENT RELATING TO AN ELECTRONIC SEARCH TOOL, AND DECISION ON PETITION UNDER 37 CFR 1.183 SEEKING WAIVER OF REQUIREMENTS UNDER 37 CFR 1.98

This is a response to a September 29, 1999 Petition Under 37 CFR 1.182, requesting relief from the current requirements for Information Disclosure Statements under 37 CFR 1.98 in view of the need to file multiple applications relating to different aspects of a particular invention. The petition will be treated as two separate petitions: a first petition under 37 CFR 1.182, relating to submission of an electronic search tool and the need to protect proprietary information therein, and a second petition under 37 CFR 1.183, requesting relief from the § 1.98 provision which requires filing paper copies of references being cited in each of many related applications.

A Decision on the petition under 37 CFR 1.182 re the electronic search tool will be issued in due course.

The petition under 37 CFR 1.183 re the submission of 3 paper copies of IDS citations in a holding application is Granted to the extent set forth below.

The Decision is set forth in five parts:

- Part I. Background
- Part II. Petition Under 37 CFR 1.182 - Electronic Search Tool
- Part III. Petition Under 37 CFR 1.183 - Paper Copies

RECEIVED
MAY 0 4
TECHNOLOGY CENTER 280

RECEIVED
DEC 0 3 1999
OBLON, SPIVAK, McCLELLAND, MAIER & NEUSTADT, P.C.

- Part IV. Summary
- Part V. Further Correspondence

Part 1. Background

The instant national stage application filed under 35 U.S.C. 371 currently contains claims 77-153 with three independent claims. The instant application is one of about 200 U.S. applications (either filed or to be filed) with each U.S. application having as many as 40 corresponding foreign applications (either filed or to be filed), the applications relating to different aspects of the invention. An Information Disclosure Citation List has been submitted that lists 259 U.S. patents, 369 foreign patent documents, and 43 other references for a total of 671 citations. Additionally, a list of related cases has been supplied containing 31 U.S. applications and 52 PCT applications. Paper copies have not been supplied in the related applications of any of the citations or the identified related cases.

37 CFR 1.56(b)(1) requires disclosure to the Office of information that "establishes, by itself or in combination with other information, a prima facie case of unpatentability of a claim...." Such disclosure can be made by an Information Disclosure Statement (IDS) in the manner prescribed by 37 CFR 1.97 and 1.98. 37 CFR 1.56(a).

Petitioner asks "[w]hether the information cited in the manner proposed in [petition] Section 3.1.1 ... is a disclosure that is sufficient to meet the requirements of 37 CFR § 1.56." To the extent that this question refers to the content of the disclosure and the particulars of the subject applications, the Office will not answer the question. It is Office practice not to attempt to define how an individual "ensures" compliance with the rule in a particular application. See, e.g., MPEP 2004. Because determinations on this issue require an evaluation of the intent of the party involved, the Office declines to investigate the question. See MPEP 2010. To the extent that Petitioner's question concerns the form in which the disclosure is provided, rule 56 permits a disclosure in a combination of paper and electronic formats.

Petitioner, in addition to meeting the duty set forth in 37 CFR 1.56 to disclose material information, also wishes to disclose to the Office information that may not meet the definition of

materiality as set forth in the rule[1]. Information identified by U.S. or foreign examiners in any of the related U.S. and foreign applications would be cited in each of the related U.S. applications.[2] In addition, Petitioner seeks to submit other information in each of the related U.S. applications, such as all the co-pending U.S. applications that relate to the invention (useful for determining possible double patenting rejections), and foreign search reports. Petition, page 4.

Rather than be required to submit, via a paper copy, each piece of information in each application each time the information is obtained, Petitioner seeks to have:

(1)(a) one application (the instant application) identified as a "holding" application which would contain a complete set of paper copies of references; the paper copies to be submitted in only the "holding" application;

(b) the other related pending U.S. applications, hereafter referred to as the bulk filing applications, will not contain the paper set of reference copies but will contain other information, e.g., a copy of the decision on petition[3] permitting such procedure and a copy of the Form 1449 (or equivalent);[4] and

(2) an "electronic search tool"[5] containing different types of information.

The information supplied via the paper copies would be updated monthly, rather than as received from U.S. and foreign examiners, and cancellation of this arrangement would be an option for both

---

[1]Reference to MPEP 2001.05, Petition, page 3.

[2]Petition, page 3. The present petition requesting relief does not set forth any commitment nor intent by applicant to screen such information for relevancy to each of the U.S. applications in which the information is being cited.

[3]The original of which would be in the instant holding application.

[4]See, Petition under 37 CFR 1.182, *infra*.

[5]See, Petition under 37 CFR 1.183, *infra*.

Petitioner and the Office upon notice. These, and other more specific conditions, are discussed in further detail in regard to the § 1.182 petition, below.

Petitioner has essentially requested relief in two areas: (1) treatment of information in an electronic search tool, to be submitted independent of any particular application, as in compliance with IDS submission requirements for all bulk filing applications, and (2) the ability to provide the paper copies of each reference in an IDS submission in only one of the bulk filing applications (the instant holding application) as well as two additional sets of copies rather than as is normally required in each application for which the reference (IDS citation) is to be considered. These two areas of relief are independent of each other and drawn toward different regulations. Accordingly, the petition has been treated as two petitions, and the present decision addresses the two areas of requested relief separately. While it is undeniable that relief in both areas would be of benefit to Petitioner, the granting of relief in one area does not, in fact, require the granting of relief in the other. Moreover, in view of the need to further consider the requested relief related to the electronic search tool, deciding the requested relief issues separately permits at this time a partial grant of the original petition.[6]

Part II. Petition under 37 CFR 1.182- Electronic Search Tool

The issues involving the electronic search tool are more extensive than those relating to the requirement for paper copies in each bulk filing application and more time is needed to fully consider and address them. Accordingly, the petition under § 1.182 shall not be decided at this time and is not treated in the instant decision on the § 1.183 petition although it will continue to be considered, with a decision rendered in due course.

[6]It is recognized that petitioner believes the issues presented by the petition may not be decided independent of one another as both the paper copy issue and the electronic search tool issue represent the most complete solution to duty of disclosure issues under 37 CFR 1.56, Petition, fn. 5.

Part III. Petition Under 37 CFR 1.183 - Paper Copies

The submitted petition fee of $130 will be treated as the § 1.183 petition fee.

37 CFR 1.98 requires that any information disclosure statement provide a copy of all patents, publications or other information submitted under 37 CFR 1.97 for consideration by the Office. 37 CFR 1.97 notes that information disclosure statements are considered in regard to the application in which they are filed. See also MPEP 609, page 600-102, right-hand column, and page 600-103, left-hand column.

Paper copies: Petitioner notes that the instant application is one of 200 bulk filing applications that will be or have been filed in regard to a particular technology. Accordingly, Petitioner requests that individual paper copies of each reference, brought to the attention of the Office in regard to any one individual application, not be required to be submitted in each such application. Rather, it is requested that three complete sets of paper copies be permitted to be filed: one set for the instant application which will be designated as a holding application; one set to be used to establish new subclasses for the technology; and one set to be used as a reference set should either or both of the other two sets become corrupted (Petition, pages 6 and 7).[7]

Once past the initial IDS submission, it is proposed that applicant would update the IDS submissions once a month, rather than every time a new reference is found, although the time frames required by § 1.97 would have to be complied with, which may mean that submissions may occur more frequently than once a month.

Form 1449: In addition to submission of the three sets of paper copies in the instant "holding" application, the petition proposes that each of the bulk filing applications would receive a Form 1449 listing the reference citations (Petition, page 7) and the Form 1449 (in each of the bulk filing applications) would be updated, pursuant to the time requirements of § 1.97, each time the three sets of paper copies are updated. The petition is

[7]It would presumably up to the Technology Center to determine how best to store the reference set and how it is to be accessed.

silent as to whether other types of information that may be submitted in the holding application IDS, e.g., concise explanations of foreign language documents under § 1.98(a)(3), would also be supplied in all the bulk filing applications.

Suspension of action: In view of the use of the instant application as a holding application (to contain a complete set of paper copies of reference citations, which can be consulted by the examiner when examining any of the other bulk filing applications that have a Form 1449 but not the paper copies), the petition states that upon allowance of the instant holding application the right is reserved to file a petition to suspend action in the instant application so that the application can remain as the holding application (Petition, page 7). Alternatively, upon agreement of the Assignee and a Director of the Technology Center involved, an alternate application may be designated as the holding application.

New subclasses: The petition envisions an affirmative duty on the Technology Center to establish new subclasses that will include each of the references submitted during the course of prosecution of the bulk filing applications.[8] In addition, the Office is to agree that "[e]xaminers will be required to search these newly created subclasses" (from submissions by the Assignee and later by others) "as part of the routine patent prosecution process." Petition, page 8.

Termination: Petitioner seeks a right of termination,[9] which is to be a mutual option. Termination is to be by written notice, to the attorney of record if the Office terminates and the filing of a termination request and by contacting the Director of TC 2800 if applicant terminates. Conventional IDS procedures would begin three months after notice of termination.

---

[8]The new subclasses will later be supplemented by references supplied by others who may file applications related to the same technology.

[9]Although termination is discussed under a section related to licensing of the electronic search tool and the petition generally (Petition, pages 10 and 11), it is presumed that Petitioner intends to have the termination provision apply to the waiver of paper copies if that alone is granted.

37 CFR 1.183 provides relief for extraordinary situations, when justice requires suspension of any requirement of the regulations which is not a requirement of the statutes. The instant petition urges that not only would applicant be spared the necessity of submitting duplicative paper copies of references in 200 applications, but also the Office would benefit from not having to handle and store the duplicative sets of copies. While there may be some negative effects from the Office's point of view in terms of making the copies available to different examiners handling the various applications,[10] on balance, there is seen to be sufficient benefit to justify waiver in this instance.

Accordingly, the petition under 37 CFR 1.183 is granted to the extent indicated and under the terms and conditions as are set forth below.[11]

---

[10]Even thought the technology of the applications may be related, the specific claims of the applications may require different classifications of the applications and the quantity of applications would dictate the need for more than one examiner to timely examine the applications.

[11]The waiver being granted in this instance is not intended to set a general precedent where there is more than one application containing related subject matter. The Office, however, intends to use the instant grant to study whether the opportunity for waiver can be extended to other applicants in similar circumstances, and whether a more general program can be announced. One factor that will be considered is the extent to which relevant information (that may not be necessarily required by § 1.56(b) but which would nonetheless be useful to the examiner, e.g., § 1.56(a)(1) and (2)), is submitted rather than huge dumps of nonrelevant or marginally relevant information.

It is noted that while the petition only refers to the submission of citations that are made by both U.S. and foreign examiners, the term "include" is used (Petition, page 2) which is open ended. The Petition states that it is the intention to submit a copy of every reference identified both by U.S. examiners in the 200 U.S. applications and by foreign examiners in as many as 40 corresponding foreign applications for each U.S. application (Petition, page 3). It has not been stated whether the current 671 reference citations currently of record represent only those citations made by U.S. and foreign examiners or whether they include citations from other sources, such as a

The § 1.98(a)(2) requirement for (the submission of) a copy of each IDS citation in a bulk filing application will be waived in the bulk filing application provided that the following 8 conditions are complied with:

1) Three paper copies of each IDS citation are or have been submitted to the Office;

2) The (bulk filing) application for which waiver of § 1.98(a)(2) is desired refers to the instant holding application, such as by a claim of priority under 35 U.S.C. 120, or as containing related technology;

3) The information is or has also been cited in the holding application;

   Note: Applicant is not required to cite in each bulk filing application every item of information that is cited in the instant holding application. Items should be cited in each bulk filing application on the basis of relevancy and materiality to the particular claims in the bulk filing application and what each piece of information teaches.

   A waiver is not granted (for the requirement to supply a paper copy of an IDS citation in another bulk filing application) where the citation is not, or has not been, made in the instant holding application.

4) A copy of this Decision is filed in the bulk filing application;

5) Explanatory information related to a particular citation, such as the concise explanation of a foreign language reference under § 1.98(a)(2), once submitted in the holding application must be supplied in each bulk filing application where the citation is made.

6) The Office accepts and specifically reserves the right to terminate the waiver grant in regard to § 1.98(a)(2) without provision of reasons. In such event, a two month period will be given where paper copies would

---

preexamination search or third party citations. See also Petition, page 19.

have to be supplied in all applications where new citations are made. Should a termination of the waiver be desired by the Office, the Office will provide written notice to the correspondence address of record. Termination by applicant may be by returning to compliance with § 1.98(a)(2) without formal notice thereof and no transition/continuing period after termination is required.

7) The grant of the § 1.183 petition re § 1.98(a)(2) does not indicate that the Office would favorably treat a petition to suspend action under § 1.103(a) should the instant application be allowed. Issuance of the instant application as a patent is not seen to terminate its usefulness either: (1) as a holding application for references by examiners working on other related applications,[12] or (2) as a vehicle for the storage of references to be cited even after the patent issues (35 U.S.C. 301, 37 CFR 1.501, and MPEP 2202). Should the instant application become abandoned, the issue of continued introduction of paper copies of new citations could be taken up at that time. The Office, however, may consider suspending or taking other appropriate action in the instant holding application in the event the holding application is allowed, if it is in the best interest of the Office to do so.

8) The Office has established a series of Official Digests in Class 174 based on the technology represented by the instant invention (a classification schedule thereof is attached). As is the case will all Digests, their usefulness will be continually evaluated. The Office will place the holding application's references in the Digests as they are determined to require such placement and as new ones are brought to the attention of the Office either by Petitioner or a third party. A search of the Digests themselves or what they contain (such as the holding application or reference copy sets), either in paper copy or electronic form, will be

---

[12]The patent file can be kept in the Technology Center for easy reference, or rather than rely upon the patent, either the reference set of paper copies could be utilized, or the Office may decide to rely on the Digests being created.

conducted when mandatory based on the classification of the claims, or when deemed advisable - on a case by case basis.

Part IV. Summary

A Decision on the Petition under 37 CFR 1.182, drawn toward submission of the electronic search tool, will be acted upon in due course when all outstanding issues are resolved.

The petition under 37 CFR 1.183 agreeing to supply three copies of each IDS citation in a holding application and requesting waiver of the paper copy requirement for submission in every related application under § 1.98(a)(2) is granted, however, the following is not agreed to:

- the grant of a future petition under 37 CFR 1.103 for suspension from publication of the holding application should it be allowed,
- the required search of subclasses from one of the three sets of paper copies and placement of one of the other sets of paper copies therein, and
- any termination provision more than two months (rather than the three months that the petition sets forth) from notice of termination.

Part V. Further Correspondence

Further correspondence with respect to this matter should be addressed to Hiram H. Bernstein, Senior Legal Advisor, Special Program Law Office, as follows:

By mail: Commissioner of Patents and Trademarks
Box DAC
Washington, D.C. 20231

By FAX: (703) 308-6916
Attn: Special Program Law Office

By hand: Special Program Law Office
Crystal Plaza Four, Suite 3C23
2201 South Clark Place
Arlington, VA 22202

Telephone inquiries specific to this matter should be directed to Mr. Bernstein at (703) 305-9285.

The instant application will be retained by this Office: for a period of TWO MONTHS to await any response to the instant Decision, and for the purpose of continuing review of the § 1.182 petition re the electronic search tool.

Robert J. Spar
Director
Special Program Law Office
Office of the Deputy Assistant Commissioner
for Patent Policy and Projects

Attachment: List of Digests 13-33

Digest 13 HIGH VOLTAGE CABLE (E.G., ABOVE 10KV, CORONA PREVENTION, ETC.)
Digest 14 . Having a particular cable application (e.g., winding, etc.)
Digest 15 .. In a power generation system (e.g., prime-m ver dynamo, generator system, etc.)
Digest 16 .. In a motive power system (e.g., electric motor control system, etc.)
Digest 17 .. In an electric power conversion, regulation, or protection system
Digest 18 .. In a power distribution network
Digest 19 .. In a dynamo-electric machine
Digest 20 ... Stator
Digest 21 ... Rotor
Digest 22 ... Winding, per se
Digest 23 .. In a circuit breaker, relay, or switch
Digest 24 .. In an inductive device (e.g., reactor, electromagnet, etc.)
Digest 25 ... Transformer
Digest 26 . Having a plural-layer insulation system
Digest 27 .. Including a semiconductive layer
Digest 28 ... Plural semiconductive layers
Digest 29 . Having a semiconductive layer
Digest 30 . Having insulation with a particular dimension or geometry
Digest 31 . Having a shield or metallic layer
Digest 32 . Having means for cooling
Digest 33 . Method of cable manufacture, assembly, repair, or splicing

OIPE JC90
MAY 02 2000
PATENT & TRADEMARK OFFICE

RECEIVED
MAY 04 2000
TECHNOLOGY CENTER 2800

Docket No.: 705/70555-2

FORM PTO-1595 (Modified)
(Rev. 6-93)
OMB No. 0651-0011 (exp.4/94)
Copyright 1996-97 LegalStar
P08A/REV02

RECORDATION FORM COVER SHEET
PATENTS ONLY

U.S. DEPARTMENT OF COMMERCE
Patent and Trademark Office

Tab settings ➔ ➔ ➔ ▼ ▼ ▼ ▼ ▼ ▼ ▼

To the Honorable Commissioner of Patents and Trademarks: Please record the attached original documents or copy thereof.

OIPE JC90 MAY 0 2 2000 PATENT & TRADEMARK OFFICE

1. Name of conveying party(ies):
Asea Brown Boveri Aktiebolag

Additional names(s) of conveying party(ies) attached? ☐ Yes ☒ No

2. Name and address of receiving party(ies):

Name: **ABB AB**

Address: **721 83 Vasteras, SWEDEN**

City: _____ State/Prov.: _____

Country: _____ ZIP: _____

Additional name(s) & address(es) attached? ☐ Yes ☒ No

3. Nature of conveyance:

☐ Assignment ☐ Merger

☐ Security Agreement ☒ Change of Name

☐ Other _____

Execution Date: **September 9, 1999**

4. Application number(s) or registration numbers(s):

If this document is being filed together with a new application, the execution date of the application is: _____

Patent Application No. 08/952,993 Filing date April 9, 1998

B. Patent No.(s)

RECEIVED
MAY 0 4 2000
TECHNOLOGY CENTER 2800

Additional numbers attached? ☐ Yes ☒ No

5. Name and address of party to whom correspondence concerning document should be mailed:

Name: **John P. DeLuca**

Registration No. **25,505**

Address: **WATSON COLE GRINDLE WATSON, P.L.L.C.**

1400 K Street, N.W., 10th Floor

City: **Washington** State/Prov.: **DC**

Country: _____ ZIP: **20005-2477**

6. Total number of applications and patents involved: **1**

7. Total fee (37 CFR 3.41):.....$ **40.00**

☒ Enclosed - Any excess or insufficiency should be credited or debited to deposit account

☐ Authorized to be charged to deposit account

8. Deposit account number:

23-0575

05/03/2000 SLUONG1 00000104 08952993

DO NOT USE THIS SPACE

03 FC:581 40.00 OP

9. Statement and signature.

To the best of my knowledge and belief, the foregoing information is true and correct and any attached copy is a true copy of the original document.

John P. DeLuca _____ May 2, 2000

Name of Person Signing Signature Date

Total number of pages including cover sheet, attachments, and document: **2**

PRV
PATENT- OCH REGISTRERINGSVERKET

OIPE JC90
MAY 0 2 2000
PATENT & TRADEMARK OFFICE

Registration number: 556029-7029

Date of registration: 23rd January, 1931

Company name: ABB AB

Address: 721 83 VÄSTERÅS

PATENT- OCH REGISTRERINGSVERKET

I hereby certify that the records kept by this office, the Companies Department of the Patent and Registration Office, Sweden, show the following changes in the name of the above company from 23rd December, 1987, and onwards:

Date of registration	Company name
1987-12-23	ASEA BROWN BOVERI Aktiebolag
1999-07-26	ABB AB

the latter being the present name of the company.

RECEIVED
MAY 0 4 2000
TECHNOLOGY CENTER 2800

Sundsvall, 9th September, 1999
Ex officio

Gunn Lahti

SWEDISH PATENT AND REGISTRATION OFFICE

Bolagsavdelningen
851 81 Sundsvall
Besöksadress
Badhusparken
Postgiro 95 06 08 - 0
Bankgiro 5050 - 0255
Telefon 060 - 18 40 00
Telefax 060 - 12 64 77

BEST AVAILABLE COPY

Patent and Trademark Office
ASSISTANT SECRETARY AND COMMISSIONER
OF PATENTS AND TRADEMARKS
Washington, D.C. 20231

Response to Decision 2-1-00

Paper No. 11

COPY MAILED

DEC 01 1999

SPECIAL PROGRAMS OFFICE
DAC FOR PATENTS

Oblon Spivak McClelland Maier & Neustadt
1755 Jefferson Davis Highway
Fourth Floor
Arlington VA 22202

In re Application of
Mats Leijon, et al
Application No. 09/147,325
Filed: February 17, 1999
Attorney Docket No. 9847-0001-6X

: RESPONSE TO PETITION UNDER 37 CFR 1.182 SEEKING SPECIAL TREATMENT RELATING TO AN ELECTRONIC SEARCH TOOL, AND DECISION ON PETITION UNDER 37 CFR 1.183 SEEKING WAIVER OF REQUIREMENTS UNDER 37 CFR 1.98

This is a response to a September 29, 1999 Petition Under 37 CFR 1.182, requesting relief from the current requirements for Information Disclosure Statements under 37 CFR 1.98 in view of the need to file multiple applications relating to different aspects of a particular invention. The petition will be treated as two separate petitions: a first petition under 37 CFR 1.182, relating to submission of an electronic search tool and the need to protect proprietary information therein, and a second petition under 37 CFR 1.183, requesting relief from the § 1.98 provision which requires filing paper copies of references being cited in each of many related applications.

A Decision on the petition under 37 CFR 1.182 re the electronic search tool will be issued in due course.

The petition under 37 CFR 1.183 re the submission of 3 paper copies of IDS citations in a holding application is Granted to the extent set forth below.

The Decision is set forth in five parts:

- Part I. Background
- Part II. Petition Under 37 CFR 1.182 - Electronic Search Tool
- Part III. Petition Under 37 CFR 1.183 - Paper Copies

RECEIVED
DEC 03 1999
OBLON, SPIVAK, McCLELLAND,
MAIER & NEUSTADT P.C.

BEST AVAILABLE COPY

- Part IV. Summary
- Part V. Further Correspondence

Part 1. Background

The instant national stage application filed under 35 U.S.C. 371 currently contains claims 77-153 with three independent claims. The instant application is one of about 200 U.S. applications (either filed or to be filed) with each U.S. application having as many as 40 corresponding foreign applications (either filed or to be filed), the applications relating to different aspects of the invention. An Information Disclosure Citation List has been submitted that lists 259 U.S. patents, 369 foreign patent documents, and 43 other references for a total of 671 citations. Additionally, a list of related cases has been supplied containing 31 U.S. applications and 52 PCT applications. Paper copies have not been supplied in the related applications of any of the citations or the identified related cases.

37 CFR 1.56(b)(1) requires disclosure to the Office of information that "establishes, by itself or in combination with other information, a prima facie case of unpatentability of a claim...." Such disclosure can be made by an Information Disclosure Statement (IDS) in the manner prescribed by 37 CFR 1.97 and 1.98. 37 CFR 1.56(a).

Petitioner asks "[w]hether the information cited in the manner proposed in [petition] Section 3.1.1 ... is a disclosure that is sufficient to meet the requirements of 37 CFR § 1.56." To the extent that this question refers to the content of the disclosure and the particulars of the subject applications, the Office will not answer the question. It is Office practice not to attempt to define how an individual "ensures" compliance with the rule in a particular application. See, e.g., MPEP 2004. Because determinations on this issue require an evaluation of the intent of the party involved, the Office declines to investigate the question. See MPEP 2010. To the extent that Petitioner's question concerns the form in which the disclosure is provided, rule 56 permits a disclosure in a combination of paper and electronic formats.

Petitioner, in addition to meeting the duty set forth in 37 CFR 1.56 to disclose material information, also wishes to disclose to the Office information that may not meet the definition of

materiality as set forth in the rule[1]. Information identified by U.S. or foreign examiners in any of the related U.S. and foreign applications would be cited in each of the related U.S. applications.[2] In addition, Petitioner seeks to submit other information in each of the related U.S. applications, such as all the co-pending U.S. applications that relate to the invention (useful for determining possible double patenting rejections), and foreign search reports. Petition, page 4.

Rather than be required to submit, via a paper copy, each piece of information in each application each time the information is obtained, Petitioner seeks to have:

(1)(a) one application (the instant application) identified as a "holding" application which would contain a complete set of paper copies of references; the paper copies to be submitted in only the "holding" application;

(b) the other related pending U.S. applications, hereafter referred to as the bulk filing applications, will not contain the paper set of reference copies but will contain other information, e.g., a copy of the decision on petition[3] permitting such procedure and a copy of the Form 1449 (or equivalent);[4] and

(2) an "electronic search tool"[5] containing different types of information.

The information supplied via the paper copies would be updated monthly, rather than as received from U.S. and foreign examiners, and cancellation of this arrangement would be an option for both

---

[1]Reference to MPEP 2001.05, Petition, page 3.

[2]Petition, page 3. The present petition requesting relief does not set forth any commitment nor intent by applicant to screen such information for relevancy to each of the U.S. applications in which the information is being cited.

[3]The original of which would be in the instant holding application.

[4]See, Petition under 37 CFR 1.182, infra.

[5]See, Petition under 37 CFR 1.183, infra.

Petitioner and the Office upon notice. These, and other more specific conditions, are discussed in further detail in regard to the § 1.182 petition, below.

Petitioner has essentially requested relief in two areas: (1) treatment of information in an electronic search tool, to be submitted independent of any particular application, as in compliance with IDS submission requirements for all bulk filing applications, and (2) the ability to provide the paper copies of each reference in an IDS submission in only one of the bulk filing applications (the instant holding application) as well as two additional sets of copies rather than as is normally required in each application for which the reference (IDS citation) is to be considered. These two areas of relief are independent of each other and drawn toward different regulations. Accordingly, the petition has been treated as two petitions, and the present decision addresses the two areas of requested relief separately. While it is undeniable that relief in both areas would be of benefit to Petitioner, the granting of relief in one area does not, in fact, require the granting of relief in the other. Moreover, in view of the need to further consider the requested relief related to the electronic search tool, deciding the requested relief issues separately permits at this time a partial grant of the original petition.[6]

Part II. Petition under 37 CFR 1.182- Electronic Search Tool

The issues involving the electronic search tool are more extensive than those relating to the requirement for paper copies in each bulk filing application and more time is needed to fully consider and address them. Accordingly, the petition under § 1.182 shall not be decided at this time and is not treated in the instant decision on the § 1.183 petition although it will continue to be considered, with a decision rendered in due course.

---

[6]It is recognized that petitioner believes the issues presented by the petition may not be decided independent of one another as both the paper copy issue and the electronic search tool issue represent the most complete solution to duty of disclosure issues under 37 CFR 1.56, Petition, fn. 5.

Part III. Petition Under 37 CFR 1.183 - Paper Copies

The submitted petition fee of $130 will be treated as the § 1.183 petition fee.

37 CFR 1.98 requires that any information disclosure statement provide a copy of all patents, publications or other information submitted under 37 CFR 1.97 for consideration by the Office. 37 CFR 1.97 notes that information disclosure statements are considered in regard to the application in which they are filed. See also MPEP 609, page 600-102, right-hand column, and page 600-103, left-hand column.

Paper copies: Petitioner notes that the instant application is one of 200 bulk filing applications that will be or have been filed in regard to a particular technology. Accordingly, Petitioner requests that individual paper copies of each reference, brought to the attention of the Office in regard to any one individual application, not be required to be submitted in each such application. Rather, it is requested that three complete sets of paper copies be permitted to be filed: one set for the instant application which will be designated as a holding application; one set to be used to establish new subclasses for the technology; and one set to be used as a reference set should either or both of the other two sets become corrupted (Petition, pages 6 and 7).[7]

Once past the initial IDS submission, it is proposed that applicant would update the IDS submissions once a month, rather than every time a new reference is found, although the time frames required by § 1.97 would have to be complied with, which may mean that submissions may occur more frequently than once a month.

Form 1449: In addition to submission of the three sets of paper copies in the instant "holding" application, the petition proposes that each of the bulk filing applications would receive a Form 1449 listing the reference citations (Petition, page 7) and the Form 1449 (in each of the bulk filing applications) would be updated, pursuant to the time requirements of § 1.97, each time the three sets of paper copies are updated. The petition is

[7] It would presumably up to the Technology Center to determine how best to store the reference set and how it is to be accessed.

silent as to whether other types of information that may be submitted in the holding application IDS, e.g., concise explanations of foreign language documents under § 1.98(a)(3), would also be supplied in all the bulk filing applications.

Suspension of action: In view of the use of the instant application as a holding application (to contain a complete set of paper copies of reference citations, which can be consulted by the examiner when examining any of the other bulk filing applications that have a Form 1449 but not the paper copies), the petition states that upon allowance of the instant holding application the right is reserved to file a petition to suspend action in the instant application so that the application can remain as the holding application (Petition, page 7). Alternatively, upon agreement of the Assignee and a Director of the Technology Center involved, an alternate application may be designated as the holding application.

New subclasses: The petition envisions an affirmative duty on the Technology Center to establish new subclasses that will include each of the references submitted during the course of prosecution of the bulk filing applications.[8] In addition, the Office is to agree that "[e]xaminers will be required to search these newly created subclasses" (from submissions by the Assignee and later by others) "as part of the routine patent prosecution process." Petition, page 8.

Termination: Petitioner seeks a right of termination,[9] which is to be a mutual option. Termination is to be by written notice, to the attorney of record if the Office terminates and the filing of a termination request and by contacting the Director of TC 2800 if applicant terminates. Conventional IDS procedures would begin three months after notice of termination.

---

[8]The new subclasses will later be supplemented by references supplied by others who may file applications related to the same technology.

[9]Although termination is discussed under a section related to licensing of the electronic search tool and the petition generally (Petition, pages 10 and 11), it is presumed that Petitioner intends to have the termination provision apply to the waiver of paper copies if that alone is granted.

37 CFR 1.183 provides relief for extraordinary situations, when justice requires suspension of any requirement of the regulations which is not a requirement of the statutes. The instant petition urges that not only would applicant be spared the necessity of submitting duplicative paper copies of references in 200 applications, but also the Office would benefit from not having to handle and store the duplicative sets of copies. While there may be some negative effects from the Office's point of view in terms of making the copies available to different examiners handling the various applications,[10] on balance, there is seen to be sufficient benefit to justify waiver in this instance.

Accordingly, the petition under 37 CFR 1.183 is granted to the extent indicated and under the terms and conditions as are set forth below.[11]

---

[10]Even thought the technology of the applications may be related, the specific claims of the applications may require different classifications of the applications and the quantity of applications would dictate the need for more than one examiner to timely examine the applications.

[11]The waiver being granted in this instance is not intended to set a general precedent where there is more than one application containing related subject matter. The Office, however, intends to use the instant grant to study whether the opportunity for waiver can be extended to other applicants in similar circumstances, and whether a more general program can be announced. One factor that will be considered is the extent to which relevant information (that may not be necessarily required by § 1.56(b) but which would nonetheless be useful to the examiner, e.g., § 1.56(a)(1) and (2)), is submitted rather than huge dumps of nonrelevant or marginally relevant information.

It is noted that while the petition only refers to the submission of citations that are made by both U.S. and foreign examiners, the term "include" is used (Petition, page 2) which is open ended. The Petition states that it is the intention to submit a copy of every reference identified both by U.S. examiners in the 200 U.S. applications and by foreign examiners in as many as 40 corresponding foreign applications for each U.S. application (Petition, page 3). It has not been stated whether the current 671 reference citations currently of record represent only those citations made by U.S. and foreign examiners or whether they include citations from other sources, such as a

The § 1.98(a)(2) requirement for (the submission of) a copy of each IDS citation in a bulk filing application will be waived in the bulk filing application provided that the following 8 conditions are complied with:

1) Three paper copies of each IDS citation are or have been submitted to the Office;

2) The (bulk filing) application for which waiver of § 1.98(a)(2) is desired refers to the instant holding application, such as by a claim of priority under 35 U.S.C. 120, or as containing related technology;

3) The information is or has also been cited in the holding application;

   Note: Applicant is not required to cite in each bulk filing application every item of information that is cited in the instant holding application. Items should be cited in each bulk filing application on the basis of relevancy and materiality to the particular claims in the bulk filing application and what each piece of information teaches.

   A waiver is not granted (for the requirement to supply a paper copy of an IDS citation in another bulk filing application) where the citation is not, or has not been, made in the instant holding application.

4) A copy of this Decision is filed in the bulk filing application;

5) Explanatory information related to a particular citation, such as the concise explanation of a foreign language reference under § 1.98(a)(2), once submitted in the holding application must be supplied in each bulk filing application where the citation is made.

6) The Office accepts and specifically reserves the right to terminate the waiver grant in regard to § 1.98(a)(2) without provision of reasons. In such event, a two month period will be given where paper copies would

---

preexamination search or third party citations. See also Petition, page 19.

have to be supplied in all applications where new citations are made. Should a termination of the waiver be desired by the Office, the Office will provide written notice to the correspondence address of record. Termination by applicant may be by returning to compliance with § 1.98(a)(2) without formal notice thereof and no transition/continuing period after termination is required.

7) The grant of the § 1.183 petition re § 1.98(a)(2) does <u>not</u> indicate that the Office would favorably treat a petition to suspend action under § 1.103(a) should the instant application be allowed. Issuance of the instant application as a patent is not seen to terminate its usefulness either: (1) as a holding application for references by examiners working on other related applications,[12] or (2) as a vehicle for the storage of references to be cited even after the patent issues (35 U.S.C. 301, 37 CFR 1.501, and MPEP 2202). Should the instant application become abandoned, the issue of continued introduction of paper copies of new citations could be taken up at that time. The Office, however, may consider suspending or taking other appropriate action in the instant holding application in the event the holding application is allowed, if it is in the best interest of the Office to do so.

8) The Office has established a series of Official Digests in Class 174 based on the technology represented by the instant invention (a classification schedule thereof is attached). As is the case will all Digests, their usefulness will be continually evaluated. The Office will place the holding application's references in the Digests as they are determined to require such placement and as new ones are brought to the attention of the Office either by Petitioner or a third party. A search of the Digests themselves or what they contain (such as the holding application or reference copy sets), either in paper copy or electronic form, will be

---

[12]The patent file can be kept in the Technology Center for easy reference, or rather than rely upon the patent, either the reference set of paper copies could be utilized, or the Office may decide to rely on the Digests being created.

conducted when mandatory based on the classification of the claims, or when deemed advisable - on a case by case basis.

Part IV. Summary

A Decision on the Petition under 37 CFR 1.182, drawn toward submission of the electronic search tool, will be acted upon in due course when all outstanding issues are resolved.

The petition under 37 CFR 1.183 agreeing to supply three copies of each IDS citation in a holding application and requesting waiver of the paper copy requirement for submission in every related application under § 1.98(a)(2) is granted, however, the following is not agreed to:

- the grant of a future petition under 37 CFR 1.103 for suspension from publication of the holding application should it be allowed,
- the required search of subclasses from one of the three sets of paper copies and placement of one of the other sets of paper copies therein, and
- any termination provision more than two months (rather than the three months that the petition sets forth) from notice of termination.

Part V. Further Correspondence

Further correspondence with respect to this matter should be addressed to Hiram H. Bernstein, Senior Legal Advisor, Special Program Law Office, as follows:

By mail: Commissioner of Patents and Trademarks
Box DAC
Washington, D.C. 20231

By FAX: (703) 308-6916
Attn: Special Program Law Office

By hand: Special Program Law Office
Crystal Plaza Four, Suite 3C23
2201 South Clark Place
Arlington, VA 22202

Telephone inquiries specific to this matter should be directed to Mr. Bernstein at (703) 305-9285.

The instant application will be retained by this Office: for a period of TWO MONTHS to await any response to the instant Decision, and for the purpose of continuing review of the § 1.182 petition re the electronic search tool.

Robert J. Spar
Director
Special Program Law Office
Office of the Deputy Assistant Commissioner
for Patent Policy and Projects

Attachment: List of Digests 13-33

Digest 13 HIGH VOLTAGE CABLE (E.G., ABOVE 10KV, CORONA PREVENTION, ETC.)
Digest 14 . Having a particular cable application (e.g., winding, etc.)
Digest 15 .. In a power generation system (e.g., prime-mover dynamo, generator system, etc.)
Digest 16 .. In a motive power system (e.g., electric motor control system, etc.)
Digest 17 .. In an electric power conversion, regulation, or protection system
Digest 18 .. In a power distribution network
Digest 19 .. In a dynamo-electric machine
Digest 20 ... Stator
Digest 21 ... Rotor
Digest 22 ... Winding, per se
Digest 23 .. In a circuit breaker, relay, or switch
Digest 24 .. In an inductive device (e.g., reactor, electromagnet, etc.)
Digest 25 ... Transformer
Digest 26 . Having a plural-layer insulation system
Digest 27 .. Including a semiconductive layer
Digest 28 ... Plural semiconductive layers
Digest 29 . Having a semiconductive layer
Digest 30 . Having insulation with a particular dimension or geometry
Digest 31 . Having a shield or metallic layer
Digest 32 . Having means for cooling
Digest 33 . Method of cable manufacture, assembly, repair, or splicing

INFORMATION DISCLOSURE CITATION LIST
ALTERNATE FORM PTO-1449
(Corrected Listing of Origina t)

Docket Number:	Application Number
Applicant(s):	
Filing Date:	Group Art Unit:

U.S. PATENT DOCUMENTS

EXAMINER INITIAL		DOCUMENT NUMBER	DATE	NAME	CLASS	SUB CLASS	FILING DATE IF APPROPRIATE
	1	US1304451	5/20/19	L. H. Burnham			
	2	US1418856	6/2/22	Robert B. Williamson			
	3	US1481585	1/22/24	James Robert Beard			
	4	US1728915	9/24/29	E. P. Blankenship et al			
	5	US1742985	1/7/30	L. H. Burnham			
	6	US1747507	2/18/30	Robert B. George			
	7	US1756672	4/29/30	John M. Barr			
	8	US1762775	6/10/30	Albert G. Ganz		–	
	9	US1781308	11/11/30	Mauritz Vos			
	10	US1861182	5/31/32	F. Hendey et al			
	11	US1974406	9/25/34	Vincent G. Apple et al			
	12	US2006170	6/25/35	Gustof A. Juhlin			
	13	US2206856	7/2/40	W. E. Shearer			
	14	US2217430	10/8/40	R. A. Baudry			
	15	US2241832	5/13/41	H.W. Wahlquist			
	16	US2251291	8/5/41	L. O. Reichelt			
	17	US2256897	9/23/41	W. F. Davidson et al			
	18	US2295415	9/8/42	G.R. Monroe			
	19	US2415652	2/11/47	R. B. Norton			
	20	US2424443	7/22/47	B. C. Evans			
	21	US2436306	2/17/48	J. S. Johnson			
	22	US2446999	8/17/48	G. Camilli			
	23	US2459322	1/18/49	G. T. Johnston			
	24	US2462651	2/22/49	H. W. Lord			
	25	US2498238	2/21/50	L. J. Berberich et al			
	26	US2721905	10/25/55	D. J. Monroe			
	27	US2780771	2/5//57	B. Lee			
	28	US2846599	8/5/58	H. H. McAdam			
	29	US2885581	5/5/59	P. T. Pileggi			
	30	US2943242	6/28/60	E. Schaschl et al			
	31	US2947957	8/2/60	J. C. Spindler			
	32	US2959699	11/8/60	J. W. Smith et al			
	33	US2962679	11/29/60	J. L. Stratton			
	34	US2975309	3/14/61	M. Seidner			
	35	US3098893	7/23/63	R. A. Pringle et al			
	36	US3130335	4/21/64	L. J. Rejda			
	37	US3143269	8/4/64	J. Van Eldik			
	38	US3157806	11/17/64	E. Wiedemann			
	39	US3158770	11/24/64	A. D. Coggeshall et al			
	40	US3268766	8/23/66	S. E. Amos			
	41	US3304599	2/21/67	R. W/ Nordin			
	42	US3354331	11/21/67	H. L. Broeker et al			
	43	US3365657	1/23/68	James Webb			
	44	US3372283	5/5/68	A. A. Jaecklin			

Examiner	Date Considered

*Examiner: Initial if reference is considered, whether or not citation is in conformance with MPEP0 609; Draw line through citation if not in conformance and not considered. Include copy of this form with next communication to applicant.

ALTERNATE FORM PTO-1449
(Corrected Listing of Original List)

	45	US3418530	11/24/68	W. H. Cheever			
	46	US3435262	3/25/69	R. B. Bennett et al			
	47	US3437858	4/8/69	R. B. White			
	48	US3444407	5/13/69	E.S. Yates			
	49	US3447002	5/27/69	C. Ronnevig			
	50	US3484690	12/16/69	H. Wald			
	51	US3560777	2/2/71	W. Moeller			
	52	US3593123	7/13/71	A. C . Williamson			
	53	US3631519	12/28/71	H. Salahshourian			
	54	US3644662	2/22/72	H. Salahshourian			
	55	US3651402	3/21/72	P. H. Leffmann			
	56	US3670192	6/13/72	A. A. Andersson et al			
	57	US3675056	7/4/72	H. G. Lenz			
	58	US3684821	8/15/72	M. Miyauchi et al			
	59	US3716652	2/13/73	G. E. Lusk et al			
	60	US3716719	2/13/73	H. W. Angelery et al			
	61	US3727085	4/10/73	P. B. Goetz et al			
	62	US3740600	6/19/73	B. Turley			
	63	US3746954	7/17/73	A. Myles set al			
	64	US3758699	9/11/73	G. Lusk et al			
	65	US3778891	12/18/73	R. Amasino et al			
	66	US3781739	12/25/73	L. Meyer			
	67	US3792399	2/17/74	W. McLyman			
	68	US3801843	4/2/74	J. Corman et al			
	69	US3809933	5/7/74	H. Sugawara et al			
	70	US3881647	5/6/75	B. Wolfe			
	71	US3884154	5/20/75	F. Marten			
	72	US3891880	6/24/75	H. Britsch			
	73	US3902000	8/26/75	E. Forsyth et al			
	74	US3932779	1/13/76	A. Madsen			
	75	US3932791	1/13/76	J. Oswald			
	76	US3943392	3/9/76	J. Keuper et al			
	77	US3947278	3/30/76	K. Youtsey			
	78	US3965408	6/22/76	H. Higuchi et al			
	79	US3968388	7/6/76	D. Lambrecht et al			
	80	US3971543	7/27/76	W. Shanahan			
	81	US3974314	8/10/76	H. Fuchs			
	82	US3995785	12/7/76	R. Arick et al			
	83	US4001616	1/4/77	P. Lonseth et al			
	84	US4008409	2/15/77	R. Rhudy et al			
	85	US4031310	6/21/77	L. Jachimowicz			
	86	US4039740	8/2/77	Z. Iwata			
	87	US4041431	8/9/77	G. Enoksen			
	88	US4047138	9/6/77	R. Steigerwald			
	89	US4064419	12/20/77	R. Peterson			
	90	US4084307	4/18/78	G. Schultz el al			
	91	US4085347	4/18/78	K. Lichius			
	92	US4088953	5/9/78	S. Sarian			
	93	US4091138	5/23/78	Takagi et al			
	94	US4091139	5/23/78	J. Quirk			
	95	US4099227	7/4/78	J. Liptak			

Examiner	Date Considered

*Examiner: Initial if reference is considered, whether or not citation is in conformance with MPEP0 609; Draw line through citation if not in conformance and not considered. Include copy of this form with next communication to applicant.

ALTERNATE FORM PTO-1449
(Corrected Listing of Original List)

	96	US4103075	7/25/78	E. Adam			
	97	US4106069	8/8/78	J. Trautner et al			
	98	US4107092	8/15/78	R. Camahan et al			
	99	US4109098	8/22/78	M. Olsson et al			
	100	US4121148	10/17/78	H. Platzer			
	101	US4134036	1/9/79	G. Curtiss			
	102	US4134055	1/9/79	M. Akamatsu			
	103	US4134146	1/9/79	E. Stetson			
	104	US4149101	4/10/79	A. Lesokhin et al			
	105	US4152615	5/1/79	R. Calfo et al			
	106	US4160193	7/3/79	A. Richmond			
	107	US4164672	8/14/79	C. Flick			
	108	US4164772	8/14/79	N. Hingorani			
	109	US4177397	12/4/79	John Lill			
	110	US4177418	12/4/79	K. Brueckner et al			
	111	US4184186	1/15/80	P. Barkan			
	112	US4200817	4/29/80	T. Bratoljic			
	113	US4200818	4/29/80	C. Ruffing et al			
	114	US4206434	6/3/80	A. Hase			
	115	US4207427	6/10/80	G. Beretta el al			
	116	US4207482	6/10/80	C. Neumeyer et al			
	117	US4208597	6/17/80	A. Mulach et al			
	118	US4229721	10/21/80	W. Koloczek et al			
	119	US4238339	12/9/80	G. Khutoretsky et al			
	120	US4239999	12/16/80	A. Vinokurov et al			
	121	US4245182	1/13/81	H. Aotsu et al			
	122	US4246694	1/27/81	H-G Raschbichler et al			
	123	US4255684	3/10/81	W. Mischler et al			
	124	US4258280	3/24/81	M. Starcevic			
	125	US4262209	4/14/81	C. Berner			
	126	US4274027	6/16/81	S. Higuchi et al			
	127	US4281264	7/28/81	T. Keim et al			
	128	US4307311	12/22/81	A. Grozinger			
	129	US4308476	12/29/81	R. Schuler			
	130	US4308575	12/29/81	A. Mase			
	131	US4310966	1/19/82	O. Brietenbach			
	132	US4317001	2/23/82	D. Silver et al			
	133	US4320645	3/23/82	L. Stanley			
	134	US4321518	3/23/82	M. Akamatsu			
	135	US4330726	5/18/82	D. Albright et al			
	136	US4337922	7/6/82	M. Streiff et al			
	137	US4341989	7/27/82	T. Sandberg et al			
	138	US4347449	8/31/82	J. F. Beau			
	139	US4347454	8/31/82	K. Gellert et al			
	140	US4363612	10/12/82	R. Meyers			
	141	US4357542	11/2/82	H. Kirschbaum			
	142	US4360748	11/23/82	H-G Raschbichler et al			
	143	US4367425	1/4/83	M. Mendelsohn et al			
	144	US4368418	1/11/83	F. P. Demello et al			
	145	US4369389	1/18/83	D. Lambrecht			
	146	US4371745	2/1/83	M. Sakashita			

Examiner	Date Considered

*Examiner: Initial if reference is considered, whether or not citation is in conformance with MPEP0 609; Draw line through citation if not in conformance and not considered. Include copy of this form with next communication to applicant.

ALTERNATE FORM PTO-1449
(Corrected Listing of Original List)

	147	US4387316	6/7/83	J. Katsekas			
	148	US4403163	9/6/83	Rarmerding et al			
	149	US4404486	9/13/83	T. Keim et al			
	150	US4411710	10/25/83	M.Mochizuki et al			
	151	US4421284	12/20/83	A. Pan			
	152	US4425521	1/10/84	G. Rosenberry, Jr. et al			
	153	US4426771	1/24/84	D. Wang et al			
	154	US4429244	1/31/84	P. Nikiten et al			
	155	US4431960	2/14/84	O. Zucker			
	156	US4443725	4/17/84	S. Derderian et al			
	157	US4470884	9/11/84	D. Carr			
	158	US4473765	9/25/84	T. Butman, Jr. et al			
	159	US4475075	10/2/84	R. Munn			
	160	US4477690	10/16/84	P. Nikitin et al			
	161	US4481438	11/6/84	T. Keim			
	162	US4488079	12/11/84	G. Dailey et al			
	163	US4503284	3/5/95	M. Minnick et al			
	164	US4510077	4/9/85	R. Elton			
	165	US4517471	5/14/85	K. Sachs			
	166	US4523249	6/11/85	S. Arimoto			
	167	US4538131	8/27/85	M. Baier et al			
	168	US4546210	10/8/85	Y. Akiba et al			
	169	US4551780	11/5/85	M. Canay			
	170	US4557038	12/10/85	M. Wcislo el al			
	171	US4560896	12/24/85	G. Vogt el al			
	172	US4565929	1/21/86	J. Baskin et al			
	173	US4588916	5/13/86	R. Lis			
	174	US4590416	5/20/86	M. Porche et al			
	175	US4594630	6/10/86	M. Rabinowitz et al			
	176	US4607183	8/19/86	J. Rieber et al			
	177	US4615109	10/7/86	M. Wcislo et al			
	178	US4618795	10/21/86	G. Cooper et al			
	179	US4619040	10/28/86	D. Wang et al			
	180	US4633109	12/30/86	J. Feigel			
	181	US4650924	3/17/87	J. Kauffman et al			
	182	US4656379	4/7/87	F. McCarty			
	183	US4677328	6/30/87	K. Kumakura			
	184	US4687882	8/18/87	G. Stone et al			
	185	US4692731	9/8/87	H. Osinga			
	186	US4723104	2/22/88	F. Rohatyn			
	187	US4737704	4/12/88	S. Kalinnikov et al			
	188	US4745314	5/17/88	J. Nakano			
	189	US4766365	8/23/88	L. Bolduc et al			
	190	US4785138	11/15/88	O. Brietenbach et al			
	191	US4795933	1/3/89	K. Sakai			
	192	US4827172	5/2/89	K. Kobayashi			
	193	US4845308	7/4/89	E. Womack, Jr. et al			
	194	US4847747	7/11/89	A. Abbondanti			
	195	US4853565	8/1/89	R. Elton et al			
	196	US4859810	8/22/89	R. Cloetens et al			
	197	US4860430	8/29/89	H. Raschbichler et al			

Examiner	Date Considered

*Examiner: Initial if reference is considered, whether or not citation is in conformance with MPEP0 609; Draw line through citation if not in conformance and not considered. Include copy of this form with next communication to applicant.

ALTERNATE FORM PTO-1449
(Corrected Listing of Original List)

	198	US4864266	9/5/89	L. Feather et al			
	199	US4883230	11/28/89	L. Lindstrom			
	200	US4894284	1/16/90	S. Yamanouchi et al			
	201	US4914386	4/3/90	S. Zocholl			
	202	US4918347	4/17/90	Y. Takaba			
	203	US4918835	4/24/90	H. Wcislo et al			
	204	US4924342	5/8/90	R. Lee			
	205	US4926079	5/15/90	P. Niemela et al			
	206	US4942326	7/17/90	J. Butler, III et al			
	207	US4949001	8/14/90	S. Campbell			
	208	US4994952	2/19/91	D. Silva et al			
	209	US4997995	3/5/91	M. Simmons et al			
	210	US5012125	4/30/91	D. Conway			
	211	US5036165	7/30/91	R. Elton et al			
	212	US5036238	7/30/91	M. Tajima			
	213	US5066881	11/19/91	R. Elton et al			
	214	US5067046	11/19/91	R. Elton et al			
	215	US5083360	1/28/92	M. Valencic et al			
	216	US5086246	2/4/92	J. Dymond et al			
	217	US5094703	3/10/92	M. Takaoka et al			
	218	US5097241	3/17/92	E. Smith et al			
	219	US5097591	3/24/92	M. Wcislo et al			
	220	US5111095	5/5/92	J. Hendershot			
	221	US5124607	6/23/92	J. Rieber et al			
	222	US5136459	8/4/92	D. Fararooy			
	223	US5140290	8/18/92	H. Dersch			
	224	US5153460	10/6/92	L. Bovino et al			
	225	US5168662	12/8/92	K. Nakamura et al			
	226	US5187428	2/16/93	R. Hutchison et al			
	227	US5235488	8/10/93	S. Koch			
	228	US5246783	9/21/93	L. Spenadel et al			
	229	US5264778	11/23/93	D. Kimmel et al			
	230	US5304883	4/19/93	J. Denk			
	231	US5305961	4/26/93	A. Errard et al			
	232	US5321308	6/14/93	A. Johncock			
	233	US5323330	6/21/93	G. Asplund et al			
	234	US5325008	6/28/94	J. Grant			
	235	US5327637	7/12/94	O. Britenbach et al			
	236	US5341281	8/23/94	G. Skibinski			
	237	US5343139	8/30/94	L. Gyugyi et al			
	238	US5355046	10/11/94	K. Weigelt			
	239	US5365132	11/15/94	J. Hann et al			
	240	US5387890	2/7/95	P. Estop et al			
	241	US5397513	3/14/95	C. Steketee, Jr.			
	242	US5400005	3/21/95	H. Bobry			
	243	US5452170	9/19/95	S. Ohde et al			
	244	US5468916	11/21/95	M. Litenas et al			
	245	US5500632	3/19/96	J. Halser, III			
	246	US5510942	4/23/96	L. Bock et al			
	247	US5530307	6/25/96	G. Horst			
	248	US5545853	8/13/96	N. Hildreth			

Examiner	Date Considered

*Examiner: Initial if reference is considered, whether or not citation is in conformance with MPEP0 609; Draw line through citation if not in conformance and not considered. Include copy of this form with next communication to applicant.

ALTERNATE FORM PTO-1449
(Corrected Listing of Original List)

	249	US5550410	8/27/96	C. Titus			
	250	US5583387	12/10/96	M. Takeuchi et al			
	251	US5587126	12/24/96	C. Steketee, Jr.			
	252	US5598137	1/28/97	F. Alber et al			
	253	US5607320	3/4/97	J. Wright			
	254	US5612510	3/18/97	N. Hildreth			
	255	US5663605	9/2/97	P. Evans et al			
	256	US5672926	9/30/97	J. Brandes et al			
	257	US5689223	11/18/97	A Demarmels et al			
	258	US5807447	9/15/98	I. Forrest			
	259	US681800	9/3/01	O. Lasche			
Subtotal	259						

FOREIGN PATENT DOCUMENTS

		DOCUMENT NUMBER	DATE	COUNTRY	TRANSLATION YES	TRANSLATION NO
	1	AT399790	7/25/95	Austria		
	2	BE565063	2/23/57	Belgium		
	3	CH391071	4/30/65	Switzerland		
	4	CH534448	2/28/73	Switzerland		
	5	CH539328	7/4/73	Switzerland		
	6	CH657482	8/29/86	Switzerland		
	7	DD137164	8/15/79	Germany DDR		
	8	DD138840	11/21/79	Germany DDR		
	9	DE1638176	6/24/71	Germany		
	10	DE1807391	5/27/70	Germany		
	11	DE2050674	5/19/71	Germany		
	12	DE2155371	5/17/73	Germany		
	13	DE2400698	7/10/75	Germany		
	14	DE2520511	11/18/76	Germany		
	15	DE2656389	6/15/78	Germany		
	16	DE2721905	11/23/78	Germany		
	17	DE277012	7/25/14	Germany		
	18	DE19547229	6/19/97	Germany		
	19	DE2824951	12/20/79	Germany		
	20	DE2835386	2/21/80	Germany		
	21	DE2839517	3/27/80	Germany		
	22	DE2854520	6/26/80	Germany		
	23	DE2913697	10/16/80	Germany		
	24	DE2917717	8/20/87	Germany		
	25	DE2920478	12/4/80	Germany		
	26	DE2939004	4/9/81	Germany		
	27	DE3006382	8/27/81	Germany		
	28	DE3008818	9/10/81	Germany		
	29	DE3009102	9/25/80	Germany		
	30	DE3028777	3/26/81	Germany		
	31	DE3305225	8/16/84	Germany		
	32	DE3309051	9/20/84	Germany		
	33	DE336418	6/23/20	Germany		
	34	DE3441311	5/15/86	Germany		

Examiner	Date Considered

*Examiner: Initial if reference is considered, whether or not citation is in conformance with MPEP0 609; Draw line through citation if not in conformance and not considered. Include copy of this form with next communication to applicant.

ALTERNATE FORM PTO-1449
(Corrected Listing of Original List)

	35	DE3543106	6/11/87	Germany		
	36	DE3612112	10/15/87	Germany		
	37	DE372390	3/27/23	Germany		
	38	DE3726346	2/16/89	Germany		
	39	DE387973	1/9/24	Germany		
	40	DE4022476	1/16/92	Germany		
	41	DE4023903	11/7/91	Germany		
	42	DE40414	8/15/1887	Germany		
	43	DE4233558	3/31/94	Germany		
	44	DE425551	2/20/26	Germany		
	45	DE426793	3/18/26	Germany		
	46	DE432169	7/26/26	Germany		
	47	DE433749	9/7/26	Germany		
	48	DE435608	10/18/26	Germany		
	49	DE435609	10/18/26	Germany		
	50	DE4409794	8/24/95	Germany		
	51	DE4412761	10/26/95	Germany		
	52	DE441717	3/11/27	Germany		
	53	DE4420322	12/14/95	Germany		
	54	DE443011	4/13/27	Germany		
	55	DE460124	5/22/28	Germany		
	56	DE482506	9/14/29	Germany		
	57	DE501181	7/3/30	Germany		
	58	DE523047	4/18/31	Germany		
	59	DE568508	1/20/33	Germany		
	60	DE572030	3/9/33	Germany		
	61	DE584639	9/27/33	Germany		
	62	DE586121	10/18/33	Germany		
	63	DE604972	11/6/34	Germany		
	64	DE629301	4/27/36	Germany		
	65	DE673545	3/24/39	Germany		
	66	DE719009	3/26/42	Germany		
	67	DE846583	8/14/52	Germany		
	68	DE875227	4/30/53	Germany		
	69	EP0120154	10/3/84	European		
	70	EP0130124	1/2/85	European		
	71	EP0142813	5/29/85	European		
	72	EP0155405	9/25/85	European		
	73	EP0174783	3/19/86	European		
	74	EP0234521	9/2/87	European		
	75	EP0244069	11/4/87	European		
	76	EP0246377	11/25/87	European		
	77	EP0265868	5/4/88	European		
	78	EP0274691	7/20/88	European		
	79	EP0280759	9/7/88	European		
	80	EP0282876	9/21/88	European		
	81	EP0309096	3/29/89	European		
	82	EP0314860	5/10/89	European		
	83	EP0316911	5/24/89	European		
	84	EP0317248	5/24/89	European		
	85	EP0335430	10/4/89	European		

Examiner	Date Considered

*Examiner: Initial if reference is considered, whether or not citation is in conformance with MPEP0 609; Draw line through citation if not in conformance and not considered. Include copy of this form with next communication to applicant.

	86	EP0342554	11/23/89	European		
	87	EP0375101	6/27/90	European		
	88	EP0406437	1/9/91	European		
	89	EP0439410	7/31/91	European		
	90	EP0440865	8/14/91	European		
	91	EP0490705	6/17/92	European		
	92	EP049104	4/7/82	European		
	93	EP0493704	4/7/82	European		
	94	EP0571155	11/24/93	European		
	95	EP0620570	10/19/94	European		
	96	EP0642027	3/8/95	European		
	97	EP0671632	9/13/95	European		
	98	EP0676777	10/11/95	European		
	99	EP0677915	10/18/95	European		
	100	EP0684679	11/29/95	European		
	101	EP0684682	11/29/95	European		
	102	EP0695019	1/31/96	European		
	103	EP0732787	9/18/96	European		
	104	EP0738034	10/16/96	European		
	105	EP0740315	10/30/96	European		
	106	EP0751605	1/2/97	European		
	107	EP0780926	6/25/97	European		
	108	EP078908	5/18/83	European		
	109	EP0802542	10/22/97	European		
	110	FR1011924	4/23/49	France		
	111	FR1126975	3/11/55	France		
	112	FR1238795	7/6/59	France		
	113	FR2108171	5/19/72	France		
	114	FR2251938	6/13/75	France		
	115	FR2305879	10/22/76	France		
	116	FR2376542	7/28/78	France		
	117	FR2467502	4/17/81	France		
	118	FR2556146	6/7/85	France		
	119	FR2594271	8/14/87	France		
	120	FR2708157	1/27/95	France		
	121	FR805544	4/29/36	France		
	122	FR841351	1/19/38	France		
	123	FR847899	12/22/38	France		
	124	GB1024583	3/30/66	United Kingdom		
	125	GB1053337	12/30/66	United Kingdom		
	126	GB1059123	2/15/67	United Kingdom		
	127	GB1103098	2/14/68	United Kingdom		
	128	GB1103099	2/14/68	United Kingdom		
	129	GB1117401	6/19/68	United Kingdom		
	130	GB1135242	12/4/68	United Kingdom		
	131	GB1147049	4/2/69	United Kingdom		
	132	GB1157885	7/9/69	United Kingdom		
	133	GB1174659	12/17/69	United Kingdom		
	134	GB1236082	6/16/71	United Kingdom		
	135	GB123906	3/13/19	United Kingdom		
	136	GB1268770	3/29/72	United Kingdom		

Examiner	Date Considered

*Examiner: Initial if reference is considered, whether or not citation is in conformance with MPEP 609; Draw line through citation if not in conformance and not considered. Include copy of this form with next communication to applicant.

	137	GB1340983	12/19/73	United Kingdom		
	138	GB1341050	12/19/73	United Kingdom		
	139	GB1365191	8/29/74	United Kingdom		
	140	GB1395152	5/21/75	United Kingdom		
	141	GB1424982	2/11/76	United Kingdom		
	142	GB1426594	3/3/76	United Kingdom		
	143	GB1438610	6/9/76	United Kingdom		
	144	GB1445284	8/11/76	United Kingdom		
	145	GB1479904	7/13/77	United Kingdom		
	146	GB1493163	11/23/77	United Kingdom		
	147	GB1502938	3/8/78	United Kingdom		
	148	GB1525745	9/20/78	United Kingdom		
	149	GB1548633	7/18/79	United Kingdom		
	150	GB1574796	9/10/80	United Kingdom		
	151	GB2000625	1/10/79	United Kingdom		
	152	GB2022327	12/12/79	United Kingdom		
	153	GB2025150	1/16/80	United Kingdom		
	154	GB2034101	5/29/80	United Kingdom		
	155	GB2046142	11/12/79	United Kingdom		
	156	GB2070470	9/8/81	United Kingdom		
	157	GB2071433	9/16/81	United Kingdom		
	158	GB2081523	2/17/82	United Kingdom		
	159	GB2099635	12/8/82	United Kingdom		
	160	GB2105925	3/30/83	United Kingdom		
	161	GB2106306	4/7/83	United Kingdom		
	162	GB2106721	4/13/83	United Kingdom		
	163	GB2136214	9/12/84	United Kingdom		
	164	GB2140195	11/21/84	United Kingdom		
	165	GB2268337	1/5/94	United Kingdom		
	166	GB2273819	6/29/94	United Kingdom		
	167	GB2283133	4/26/95	United Kingdom		
	168	GB2289992	12/6/95	United Kingdom		
	169	GB2308490	6/25/97	United Kingdom		
	170	GB268271	3/31/27	United Kingdom		
	171	GB292999	4/11/29	United Kingdom		
	172	GB293861	11/8/28	United Kingdom		
	173	GB319313	7/18/29	United Kingdom		
	174	GB518993	3/13/40	United Kingdom		
	175	GB537609	6/30/41	United Kingdom		
	176	GB540456	10/17/41	United Kingdom		
	177	GB589071	6/11/47	United Kingdom		
	178	GB685416	1/7/53	United Kingdom		
	179	GB702892	1/27/54	United Kingdom		
	180	GB715226	9/8/54	United Kingdom		
	181	GB723457	2/9/55	United Kingdom		
	182	GB763761	12/19/56	United Kingdom		
	183	GB805721	12/10/58	United Kingdom		
	184	GB827600	2/10/60	United Kingdom		
	185	GB854728	11/23/60	United Kingdom		
	186	GB870583	6/14/61	United Kingdom		
	187	GB913386	12/19/62	United Kingdom		

Examiner	Date Considered

*Examiner: Initial if reference is considered, whether or not citation is in conformance with MPEP0 609; Draw line through citation if not in conformance and not considered. Include copy of this form with next communication to applicant.

ALTERNATE FORM PTO-1449
(Corrected Listing of Original List)

	188	GB965741	8/6/64	United Kingdom		
	189	GB992249	5/19/65	United Kingdom		
	190	JP424909	1/28/92	Japan		
	191	JP1129737	5/23/89	Japan		
	192	JP318253	1/25/91	Japan		
	193	JP3245748	2/23/90	Japan		
	194	JP4179107	11/9/90	Japan		
	195	JP5290947	4/8/92	Japan		
	196	JP57043529	8/29/80	Japan		
	197	JP59076156	10/25/82	Japan		
	198	JP59159642	2/28/83	Japan		
	199	JP60206121	3/30/59	Japan		
	200	JP6196343	12/22/92	Japan		
	201	JP6233442	2/4/93	Japan		
	202	JP6264964	9/18/85	Japan		
	203	JP6325629	5/10/93	Japan		
	204	JP7057951	8/19/93	Japan		
	205	JP7264789	3/22/94	Japan		
	206	JP8167332	12/13/94	Japan		
	207	JP8264039	11/1/95	Japan		
	208	JP9200989	1/17/96	Japan		
	209	LU67199	3/14/72	Luxembourg		
	210	SE255156	2/25/69	Sweden		
	211	SE305899	11/11/68	Sweden		
	212	SE341428	12/27/71	Sweden		
	213	SE453236	1/20/82	Sweden		
	214	SE457792	6/12/87	Sweden		
	215	SE502417	12/29/93	Sweden		
	216	SE90308	9/21/37	Sweden		
	217	SU1019553	1/6/80	USSR		
	218	SU1511810	5/26/87	USSR		
	219	SU425268	9/27/74	Soviet Union		
	220	SU694939	1/7/82	Soviet Union		
	221	SU792302	1/2/71	Soviet Union		
	222	SU955369	8/30/83	Soviet Union		
	223	WO8202617	8/5/82	PCT		
	224	WO8502302	5/23/85	PCT		
	225	WO9011389	10/4/90	PCT		
	226	WO9012409	10/18/90	PCT		
	227	WO9101059	1/24/91	PCT		
	228	WO9101585	2/7/91	PCT		
	229	WO9107807	3/30/91	PCT		
	230	WO9109442	6/27/91	PCT		
	231	WO8115862	10/17/91	PCT		
	232	WO9201328	1/23/92	PCT		
	233	WO9203870	3/5/92	PCT		
	234	WO9321681	10/28/93	PCT		
	235	WO9406194	3/17/94	PCT		
	236	WO9518058	7/6/95	PCT		
	237	WO9522153	8/17/95	PCT		
	238	WO9524049	9/8/95	PCT		

Examiner	Date Considered

*Examiner: Initial if reference is considered, whether or not citation is in conformance with MPEP0 609; Draw line through citation if not in conformance and not considered. Include copy of this form with next communication to applicant.

ALTERNATE FORM PTO-1449
(Corrected Listing of Original List)

	239	WO9622606	7/25/96	PCT		
	240	WO9622607	7/25/96	PCT		
	241	WO9630144	10/3/96	PCT		
	242	WO9710640	3/20/97	PCT		
	243	WO9711831	4/3/97	PCT		
	244	WO9716881	5/9/97	PCT		
	245	WO9745288	12/4/97	PCT		
	246	WO9745847	12/4/97	PCT		
	247	WO9745848	12/4/97	PCT		
	248	WO9745906	12/4/97	PCT		
	249	WO9745907	12/4/97	PCT		
	250	WO9745912	12/4/97	PCT		
	251	WO9745914	12/4/97	PCT		
	252	WO9745915	12/4/97	PCT		
	253	WO9745916	12/4/97	PCT		
	254	WO9745918	12/4/97	PCT		
	255	WO9745919	12/4/97	PCT		
	256	WO9745920	12/4/97	PCT		
	257	WO9745921	12/4/97	PCT		
	258	WO9745922	12/4/97	PCT		
	259	WO9745923	12/4/97	PCT		
	260	WO9745924	12/4/97	PCT		
	261	WO9745925	12/4/97	PCT		
	262	WO9745926	12/4/97	PCT		
	263	WO9745927	12/4/97	PCT		
	264	WO9745928	12/4/97	PCT		
	265	WO9745929	12/4/97	PCT		
	266	WO9745930	12/4/97	PCT		
	267	WO9745931	12/4/97	PCT		
	268	WO9745932	12/4/97	PCT		
	269	WO9745933	12/4/97	PCT		
	270	WO9745934	12/4/97	PCT		
	271	WO9745935	12/4/97	PCT		
	272	WO9745936	12/4/97	PCT		
	273	WO9745937	12/4/97	PCT		
	274	WO9745938	12/4/97	PCT		
	275	WO9745939	12/4/97	PCT		
	276	WO9747067	12/11/97	PCT		
	277	WO9820595	5/14/98	PCT		
	278	WO9820596	5/15/98	PCT		
	279	WO9820597	5/14/98	PCT		
	280	WO9820600	5/14/98	PCT		
	281	WO9821385	5/22/98	PCT		
	282	WO9827634	6/25/98	PCT		
	283	WO9827635	6/25/98	PCT		
	284	WO9827636	6/25/98	PCT		
	285	WO9829927	7/9/98	PCT		
	286	WO9829928	7/9/98	PCT		
	287	WO9829929	7/9/98	PCT		
	288	WO9829930	7/9/98	PCT		
	289	WO9829931	7/9/98	PCT		

Examiner	Date Considered

*Examiner: Initial if reference is considered, whether or not citation is in conformance with MPEP0 609; Draw line through citation if not in conformance and not considered. Include copy of this form with next communication to applicant.

ALTERNATE FORM PTO-1449
(Corrected Listing of Original List)

	290	WO9829932	7/9/98	PCT		
	291	WO9833731	8/6/98	PCT		
	292	WO9833736	8/6/98	PCT		
	293	WO9833737	8/6/98	PCT		
	294	WO9834238	8/6/98	PCT		
	295	WO9834240	8/6/98	PCT		
	296	WO9834241	8/6/98	PCT		
	297	WO9834242	8/6/98	PCT		
	298	WO9834243	8/6/98	PCT		
	299	WO9834244	8/6/98	PCT		
	300	WO9834245	8/6/98	PCT		
	301	WO9834246	8/6/98	PCT		
	302	WO9834247	8/6/98	PCT		
	303	WO9834248	8/6/98	PCT		
	304	WO9834249	8/6/98	PCT		
	305	WO9834250	8/6/98	PCT		
	306	WO9834309	8/6/98	PCT		
	307	WO9834312	8/6/98	PCT		
	308	WO9834315	0/6/98	PCT		
	309	WO9834321	8/6/98	PCT		
	310	WO9834322	8/6/98	PCT		
	311	WO9834323	8/6/98	PCT		
	312	WO9834325	8/6/98	PCT		
	313	WO9834326	8/6/98	PCT		
	314	WO9834327	8/6/98	PCT		
	315	WO9834328	8/6/98	PCT		
	316	WO9834329	8/6/98	PCT		
	317	WO9834330	8/6/98	PCT		
	318	WO9834331	8/6/98	PCT		
	319	WO9917309	4/8/99	PCT		
	320	WO9917311	4/8/99	PCT		
	321	WO9917312	4/8/99	PCT		
	322	WO9917313	4/8/99	PCT		
	323	WO9917314	4/8/99	PCT		
	324	WO9917315	4/8/99	PCT		
	325	WO9917316	4/8/99	PCT		
	326	WO9917422	4/8/99	PCT		
	327	WO9917424	4/8/99	PCT		
	328	WO9917425	4/8/99	PCT		
	329	WO9917426	4/8/99	PCT		
	330	WO9917427	4/8/99	PCT		
	331	WO9917428	4/8/99	PCT		
	332	WO9917429	4/8/99	PCT		
	333	WO9917432	4/8/99	PCT		
	334	WO9917433	4/8/99	PCT		
	335	WO9919963	4/22/99	PCT		
	336	WO9919969	4/22/99	PCT		
	337	WO9919970	4/22/99	PCT		
	338	WO9927546	6/3/99	PCT		
	339	WO9928919	6/10/99	PCT		
	340	WO9928921	6/10/99	PCT		

Examiner	Date Considered

*Examiner: Initial if reference is considered, whether or not citation is in conformance with MPEP0 609; Draw line through citation if not in conformance and not considered. Include copy of this form with next communication to applicant.

	341	WO9928923	6/10/99	PCT		
	342	WO9928924	6/10/99	PCT		
	343	WO9928925	6/10/99	PCT		
	344	WO9928926	6/10/99	PCT		
	345	WO9928927	6/10/99	PCT		
	346	WO9928928	6/10/99	PCT		
	347	WO9928929	6/10/99	PCT		
	348	WO9928930	6/10/99	PCT		
	349	WO9928931	6/10/99	PCT		
	350	WO9928934	6/10/99	PCT		
	351	WO9928994	6/10/99	PCT		
	352	WO9929005	6/10/99	PCT		
	353	WO9929008	6/10/99	PCT		
	354	WO9929011	6/10/99	PCT		
	355	WO9929012	6/10/99	PCT		
	356	WO9929013	6/10/99	PCT		
	357	WO9929014	6/10/99	PCT		
	358	WO9929015	6/10/99	PCT		
	359	WO9929016	6/10/99	PCT		
	360	WO9929017	6/10/99	PCT		
	361	WO9929018	6/10/99	PCT		
	362	WO9929019	6/10/99	PCT		
	363	WO9929020	6/10/99	PCT		
	364	WO9929021	6/10/99	PCT		
	365	WO9929022	6/10/99	PCT		
	366	WO9929024	6/10/99	PCT		
	367	WO9929026	6/10/99	PCT		
	368	WO9929029	6/10/99	PCT		
	369	WO9929034	6/10/99	PCT		
Subtotal	**369**					

OTHER REFERENCES (Including Title, Author, Date, Pertinent Pages, etc.)

	1	OD001	Shipboard Electrical Insulation; G. L. Moses, 1951, pp2&3
	2	OD002	ABB Elkrafthandbok; ABB AB; 1988 ; pp274-276
	3	OD003	Elkraft teknisk Handbok, 2 Elmaskiner; A. Alfredsson et al; 1988. pp 121-123
	4	OD004	High Voltage Cables in a New Class of Generators Powerformer; M. Leijon et al; 6/14/99; pp1-8.
	5	OD005	Ohne Tranformator direkt ins Netz; Owman et al. ABB. AB; 2/8/99; pp48-51
	6	OD006	Submersible Motors and Wet-Rotor Motors for Centrifugal Pumps Submerged in the Fluid Handled; K.. Bienick, KSB; 2/25/88; pp9-17
	7	OD007	High Voltage Generators; G. Beschastnov et al; 1977; Vol 48. No. 6 pp1-7
	8	OD008	Eine neue Type von Unterwassermotoren; Electrotechnik und Maschinenbam. 49; 8/1931; pp2-3
	9	OD009	Problems in design of the 110-5OokV high-voltage generators; Nikiti et al; World Electrotechnical Congress; 6/21-27/77; Section 1. Paper #18
	10	OD010	Manufacture and Testing of Roebel bars; P. Marti et al; 1960. Pub.86. Vol 8. pp 25-31
	11	OD011	Hydroalternators of 110 to 220 kV Elektrotechn. Obz., Vol. 64, No. 3, pp132-136 March 1975; A. Abramov

Examiner	Date Considered

*Examiner: Initial if reference is considered, whether or not citation is in conformance with MPEP0 609; Draw line through citation if not in conformance and not considered. Include copy of this form with next communication to applicant.

ALTERNATE FORM PTO-1449
(Corrected Listing of Original List)

	12	OD012	Design Concepts for an Amorphous Metal Distribution Transformer; E. Boyd et al; IEEE 11/84
	13	OD013	Neue Wege zum Bau zweipoliger Turbogeneratoren bis 2 GVA, 6OkV Elektrotechnik und Maschinenbau Wien Janner 1972. Heft 1, Seite 1 –11; G. Aichholzer
	14	OD014	Optimizing designs of water-resistant magnet wire; V. Kuzenev et al; Elektrotekhnika, Vol 59, No 12, pp35-40, 1988
	15	OD015	Zur Entwicklung der Tauchpumpenmotoren; A. Schanz; KSB, pp19-24
	16	OD016	Direct Generation of alternating current at high voltages; R. Parsons; IEEE Journal, Vol 67 #393, 1/15/29; pp1065-1080
	17	OD017	Stopfbachslose Umwalzpumpen- ein wichtiges Element im modernen Kraftwerkbau; H. Holz, KSB 1, pp13-19, 1960
	18	OD018	Zur Geschichte der Brown Boveri-Synchron-Maschinen; Vierzig Jahre Generatorbau; Jan-Feb 1931 pp15-39
	19	OD019	Technik und Anwendung moderner Tauchpumpen; A. Heumann; 1987
	20	OD020	High capacity synchronous generator having no tooth stator; V.S. Kildishev et al; No.1, 1977 pp11-16.
	21	OD021	Der Asynchronmotor als Antrieb stopfbcichsloser Pumpen; E. Picmaus; Eletrotechnik und Maschinenbay No. 78, pp153-155, 1961
	22	OD022	Low core loss rotating flux transformer; R. F. Krause, et al; American Institute Physics J.Appl.Phys Vol 64 #10 11/1988, pp5376-5378
	23	OD023	An EHV bulk Power transmission line Made with Low Loss XLPE Cable;Ichihara et al; 8/92; pp3-6
	24	OD024	Underground Transmission Systems Reference Book; 1992;pp16-19; pp36-45; pp67-81
	25	OD025	Power System Stability and Control; P. Kundur, 1994; pp23-25;page 767
	26	OD026	Six phase Synchronous Machine with AC and DC Stator Connections, Part II:Harmonic Studies and a proposed Uninterruptible Power Supply Scheme; R. Schiferl et al.;8/1983 pp 2694-2701
	27	OD027	Six phase Synchronous Machine with AC and DC Stator Connections, Part 1: Equivalent circuit representation and Steady-State Analysis; R. Schiferl et al; 8/1983; pp2685-2693
	28	OD028	Reactive Power Compensation; T. Petersson; 1993; pp 1-23
	29	OD030	Permanent Magnet Machines; K. Binns; 1987; pp 9-1 through 9-26
	30	OD031	Hochspannungsaniagen for Wechselstrom; 97. Hochspannungsaufgaben an Generatoren und Motoren; Roth et al; 1938; pp452-455
	31	OD032	Hochspannungsanlagen for Wechselstrom; 97. Hochspannungsaufgaben an Generatoren und Motoren; Roth et al; Spring 1959, pp30-33
	32	OD033	Neue Lbsungswege zum Entwurf grosser Turbogeneratoren bis 2GVA, 6OkV; G. Aicholzer; 9/1974, pp249-255
	33	OD034	Advanced Turbine-generators- an assessment; A. Appleton, et al; International Conf. Proceedings, Lg HV Elec. Sys. Paris, FR. Aug-Sept/1976, Vol I, Section 11-02, pg1-9
	34	OD035	Fully slotless turbogenerators; E. Spooner; Proc., IEEE Vol 120 #12, 12/1973
	35	OD036	Toroidal winding geometry for high voltage superconducting alternators; J. Kirtley et al; MIT – Elec. Power Sys. Engrg. Lab for IEEE PES;2/1974
	36	OD037	High-Voltage Stator Winding Development; D. Albright et al; Proj. Report EL339, Project 1716, April 1984
	37	OD038	POWERFORMER ™: A giant step in power plant engineering; Owman et al; CIGRE 1998, Paper 11:1.1
	38	OD039	Thin Type DC/DC Converter using a coreless wire transformer; K. Onda et al; Proc. IEEE Power Electronics Spec. Conf.; 6/1994, pp330-334
	39	OD040	Development of extruded polymer insulated superconducting cable; 1/1992
	40	OD041	Transformer core losses; B. Richardson; Proc. IEEE 5/1986, pp365-368

Examiner	Date Considered

*Examiner: Initial if reference is considered, whether or not citation is in conformance with MPEP0 609; Draw line through citation if not in conformance and not considered. Include copy of this form with next communication to applicant.

	41	OD042	Cloth-transformer with divided windings and tension annealed amorphous wire; T. Yammamoto et al; IEEE Translation Journal on Magnetics in Japan Vol 4, No. 9 Sept. 1989
	42	OD043	A study of equipment sizes and constraints for a unified power flow controller; J Bian et al; IEEE 1996
Subtotal	**43**		

GRAND TOTAL	671		

Examiner	Date Considered

*Examiner: Initial if reference is considered, whether or not citation is in conformance with MPEP0 609; Draw line through citation if not in conformance and not considered. Include copy of this form with next communication to applicant.

INFORMATION DISCLOSURE CITATION LIST ALTERNATE FORM PTO 49 Issue 2: dated 02/21/00	Docket Number:	Application Number
	Applicant(s):	
	Filing Date:	Group Art Unit:

U.S. PATENT DOCUMENTS

EXAMINER INITIAL		DOCUMENT NUMBER	DATE	NAME	CLASS	SUB CLASS	FILING DATE IF APPROPRIATE
	1	US 4,292,558	9/29/1981	Carl Flick et al			
	2	US 4,656,316	4/7/1987	Hans-Juergen Meitsch			
	3						
	4						
	5						
	6						
	7						
	8						
	9						
	10						
	11						
	12						
	13						
	14						
	15						
	16						
	17						
	18						
	19						
	20						
	21						
	22						
	23						
	24						
	25						
	26						
	27						
	28						
	29						
	30						
	31						
	32						
	33						
	34						
	35						
	36						
	37						
	38						
	39						
Subtotal							

Examiner	Date Considered

Examiner: Initial if reference is considered, whether or not citation is in conformance with MPEP 609; Draw line through citation if not in conformance and not considered. Include copy of this form with next communication to

INFORMATION DISCLOSURE CITATION LIST
ALTERNATE FORM PTO-1449

Issue2: dated 02/21/00

FOREIGN PATENT DOCUMENTS

		DOCUMENT NUMBER	DATE	COUNTRY	TRANSLATION YES	TRANSLATION NO
	1	GB 1,319,257	6/6/1973	Anders R. Andersson et al		
	2	GB 1,322,433	7/4/1973	Siemens Akstiengesellschaft		
	3	GB 2,070,341	9/3/1981	Hans-Georg Raschbichler et al		
	4	WO 98/20598	5/14/1998	Jan-Anders Karlfeldtsgatan et al		
	5	WO 98/20602	5/14/1998	Soren Berggren		
	6	WO 98/34239	8/6/1998	Gunnar Steneorpsgatan et al		
	7	WO 99/28922	6/10/1999	Thorsten Schutte et al		
	8	WO 99/29005	6/10/1999	Mats Leijon et al		
	9	WO 99/29023	6/10/1999	Peter Carstensen et al		
	10	WO 99/29025	6/10/1999	Mats Leijon et al		
	11	EP 0056580 A1	7/28/1982	Jacobus F.H. Van der Vegt		
	12					
	13					
	14					
	15					
	16					
	17					
	18					
	19					
	20					
	21					
	22					
	23					
	24					
	25					
	26					
	27					
	28					
	29					
	30					
	31					
	32					
	33					
	34					
	35					
	36					
	37					
	38					
	39					
	40					
	41					
	42					
Subtotal						

Examiner	Date Considered

*Examiner: Initial if reference is considered, whether or not citation is in conformance with MPEP0 609; Draw line through citation if not in conformance and not considered. Include copy of this form with next communication to

UNITED STATES PATENT AND TRADEMARK OFFICE

COMMISSIONER FOR PATENTS
UNITED STATES PATENT AND TRADEMARK OFFICE
WASHINGTON, D.C. 20231
www.uspto.gov

Paper No. 32

John P. De Luca
DYKEMA GOSSETT PLLC
1300 I Street N.W.
Washington, D.C. 20005

In re Application of	:	
LEIJON et al.	:	DECISION
Application No. 08/952,993	:	ON PETITION
Filed: November 28, 1997	:	
Attorney Docket No. 66291-169-2	:	

This is a decision on the petition, filed March 14, 2002 requesting that the prosecution in the above-identified patent application be suspended for a period of six months under 37 C.F.R. § 1.103(a), and an additional six months, pursuant to MPEP § 1002.02(c)9, for a total of twelve months, beginning with the filing of the subject Petition.

Regarding a suspension on request of the applicant, 37 CFR 1.103(a) provides:

> (a) Suspension for cause. On request of the applicant, the Office may grant a suspension of action by the Office under this paragraph for good and sufficient cause. The Office will not suspend action if a reply by applicant to an Office action is outstanding. Any petition for suspension of action under this paragraph must specify a period of suspension not exceeding six months. Any petition for suspension of action under this paragraph must also include:
> (1) A showing of good and sufficient cause for suspension of action; and
> (2) The fee set forth in § 1.17(h), unless such cause is the fault of the Office

In the Request, to establish cause, Petitioner states that the claims and issues of the instant application are relevant to the claims and issues in at least U.S. Application No. 08/873,019 which Petitioner ultimately intends to appeal. Further, because the appeal of 08/873,019 will materially affect the prosecution of the instant application, the instant application should be suspended pending the decision on appeal of 08/873,019.

A review of the record indicates that the claims and issues of the instant application **are currently** relevant to the claims and issues in U.S. Application No. 08/873,019. However, since the issues of U.S. Application No. 08/873,019 have not yet been presented on appeal to the Board of

Patent Appeals and Interferences, the Petition is denied as untimely.

The petition is DENIED.

Inquiries regarding this decision should be directed to Richard Seidel at (703) 306-3431.

Richard Seidel, Director
Technology Center 2800
Semiconductors, Electrical and Optical
Systems and Components

UNITED STATES PATENT AND TRADEMARK OFFICE

COMMISSIONER FOR PATENTS
UNITED STATES PATENT AND TRADEMARK OFFICE
WASHINGTON, D.C. 20231
www.uspto.gov

Paper No. 38

John P. De Luca
DYKEMA GOSSETT PLLC
1300 I Street N.W.
Washington, D.C. 20005

NOV 22 2002

In re Application of	:	
LEIJON et al.	:	DECISION
Application No. 08/952,993	:	ON PETITION
Filed: April 09, 1998	:	
Attorney Docket No. 66291-169	:	

This is a decision on the petition, filed September 26, 2002 requesting that the prosecution in the above-identified patent application be suspended for a period of six months under 37 C.F.R. § 1.103(a), and an additional six months, pursuant to MPEP § 1002.02(c)9, for a total of twelve months, beginning with the filing of the subject Petition.

Regarding a suspension on request of the applicant, 37 CFR 1.103(a) provides:

> (a) Suspension for cause. On request of the applicant, the Office may grant a suspension of action by the Office under this paragraph for good and sufficient cause. The Office will not suspend action if a reply by applicant to an Office action is outstanding. Any petition for suspension of action under this paragraph must specify a period of suspension not exceeding six months. Any petition for suspension of action under this paragraph must also include:
> (1) A showing of good and sufficient cause for suspension of action; and
> (2) The fee set forth in § 1.17(h), unless such cause is the fault of the Office

In the Request, to establish cause, Petitioner asserts the claims and issues of the instant application are relevant to the claims and issues in at least U.S. Application No. 08/973,019 which Petitioner has appealed. Further, because the appeal of '019 will materially affect the prosecution of the instant application, the instant application should be suspended pending the decision on appeal of '019.

A review of the record indicates the instant application has claims and issues that are relevant to appealed case '019 . The claims in the instant application and appealed case '019 are both directed toward the particular structure of the high voltage cable. Consequently, since the

outcome of appealed case '019 will materially affect prosecution of the instant application, good and sufficient reasons have been demonstrated to warrant suspension of action.

Accordingly, the petition to suspend prosecution is GRANTED for a period of up to twelve (12) months starting from the filing of petition, September 26, 2002.

Inquiries regarding this decision should be directed to Richard Seidel at (703) 306-3431.

Richard Seidel, Director
Technology Center 2800
Semiconductors, Electrical and Optical
Systems and Components

UNITED STATES PATENT AND TRADEMARK OFFICE

COMMISSIONER FOR PATENTS
UNITED STATES PATENT AND TRADEMARK OFFICE
WASHINGTON, D.C. 20231
www.uspto.gov

Paper No. 31

John P. De Luca
DYKEMA GOSSETT PLLC
1300 I Street N.W.
Washington, D.C. 20005

NOV 22 2002

In re Application of
LEIJON et al.
Application No. 08/952,995
Filed: March 26, 1998
Attorney Docket No. 66291-170

DECISION
ON PETITION

This is a decision on the petition, filed August 27, 2002 requesting that the prosecution in the above-identified patent application be suspended for a period of six months under 37 C.F.R. § 1.103(a), and an additional six months, pursuant to MPEP § 1002.02(c)9, for a total of twelve months, beginning with the filing of the subject Petition.

Regarding a suspension on request of the applicant, 37 CFR 1.103(a) provides:

> (a) Suspension for cause. On request of the applicant, the Office may grant a suspension of action by the Office under this paragraph for good and sufficient cause. The Office will not suspend action if a reply by applicant to an Office action is outstanding. Any petition for suspension of action under this paragraph must specify a period of suspension not exceeding six months. Any petition for suspension of action under this paragraph must also include:
> (1) A showing of good and sufficient cause for suspension of action; and
> (2) The fee set forth in § 1.17(h), unless such cause is the fault of the Office

In the Request, to establish cause, Petitioner asserts the claims and issues of the instant application are relevant to the claims and issues in at least U.S. Application No. 08/973,019 which Petitioner has appealed. Further, because the appeal of '019 will materially affect the prosecution of the instant application, the instant application should be suspended pending the decision on appeal of '019.

A review of the record indicates the instant application has claims and issues that are relevant to appealed case '019 . The claims in the instant application and appealed case '019 are both directed toward the particular structure of the high voltage cable. Consequently, since the

outcome of appealed case '019 will materially affect prosecution of the instant application, good and sufficient reasons have been demonstrated to warrant suspension of action.

Accordingly, the petition to suspend prosecution is GRANTED for a period of up to twelve (12) months starting from the filing of petition, August 27, 2002.

Inquiries regarding this decision should be directed to Richard Seidel at (703) 306-3431.

Richard Seidel, Director
Technology Center 2800
Semiconductors, Electrical and Optical
Systems and Components

UNITED STATES PATENT AND TRADEMARK OFFICE

COMMISSIONER FOR PATENTS
UNITED STATES PATENT AND TRADEMARK OFFICE
P.O. BOX 1450
ALEXANDRIA, VA 22313-1450
www.uspto.gov

DYKEMA GOSSETT PLLC
FRANKLIN SQUARE, THIRD FLOOR WEST
1300 I STREET, NW
WASHINGTON, DC 20005

COPY MAILED

JUN 06 2005

OFFICE OF PETITIONS

In re Application of	:
Leijon, et al.	: LETTER REGARDING PTA
Application No. 08/952,995	:
Filed: March 26, 1998 (CPA	:
August 31, 2001)	:
Atty. Dkt. No.: 70560-2/8242	:

This letter is in response to the inquiry regarding patent term adjustment ("PTA") filed June 21, 2004. The Office thanks patentees for their good faith and candor in bringing this to our attention.

The correct Patent Term Adjustment ("PTA") at the time of the allowance is 0 days.

The Office will adjust the PAIR screen to reflect that the Patent Term Adjustment (PTA) determination at the time of mailing of the Notice of Allowance and Issue Fee Due reflects an adjustment of 0 days. A copy of the updated PAIR screen showing the correct determination is enclosed.

Applicants state that it appears the instant application may have been more accorded a greater adjustment than that which applicants are entitled.

A review of the application history reveals that the revised patent term adjustment of 205 days is in error. At the time of mailing of allowance, there were no grounds for adjustment for Office delays under 37 CFR 1.702.

Any potential adjustment under 37 CFR 1.702 shall be reduced in accordance with 37 CFR 1.704 for applicants' failure to engage in reasonable efforts to conclude prosecution. At the time of allowance, a reduction of 92 days was attributable to applicants in connection with the submission in response to the non-final Office action mailed August 27, 2002. In accordance with 37 CFR 1.704(b), the reduction became May 28, 2002, the day after the

date that is three months after the date of mailing of non-final Office action, and ended August 27, 2002, the date a response was submitted.

Further, any adjustment shall be reduced 365 days is in connection with the suspension of action requested August 27, 2002. In accordance with 37 CFR 1.704(c)(1), the date a request for suspension of action under § 1.103 was filed, and ended August 27, 2003, the date the suspension terminated.

Accordingly, at the time of Determination of Patent Term Adjustment, the instant application was entitled to 0 days of patent term adjustment.

As applicants are advising us of an error in providing too much patent term adjustment in this application, no fee is due in connection to this matter.

This application is being forwarded to the Publications Division for issuance of a patent.

Telephone inquiries specific to this matter should be directed to Petitions Attorney Alesia M. Brown at (703) 305-0310.

Karin Ferriter per

Karin Ferriter
Senior Legal Advisor
Office of Patent Legal Administration
Office of Deputy Commissioner
for Patent Examination Policy

Enclosure: Enclosure: Copy of Adjustment PAIR Calculation

UNITED STATES DEPARTMENT OF COMMERCE
Patent and Trademark Office
ASSISTANT SECRETARY AND COMMISSIONER
OF PATENTS AND TRADEMARKS
Washington, D.C. 20231

JW
12/3/99

RESPONSE TO DECISION
2-1-00

Paper No. 11

COPY MAILED

DEC 01 1999

SPECIAL PROGRAMS OFFICE
DAC FOR PATENTS

Oblon Spivak McClelland Maier & Neustadt
1755 Jefferson Davis Highway
Fourth Floor
Arlington VA 22202

OIPE JC104
FEB 23 2001
PATENT & TRADEMARK OFFICE

In re Application of
Mats Leijon, et al
Application No. 09/147,325
Filed: February 17, 1999
Attorney Docket No. 9847-0001-6X

: RESPONSE TO PETITION UNDER
: 37 CFR 1.182 SEEKING SPECIAL
: TREATMENT RELATING TO AN
: ELECTRONIC SEARCH TOOL, AND
: DECISION ON PETITION UNDER
: 37 CFR 1.183 SEEKING WAIVER
: OF REQUIREMENTS UNDER 37 CFR
: 1.98

This is a response to a September 29, 1999 Petition Under 37 CFR 1.182, requesting relief from the current requirements for Information Disclosure Statements under 37 CFR 1.98 in view of the need to file multiple applications relating to different aspects of a particular invention. The petition will be treated as two separate petitions: a first petition under 37 CFR 1.182, relating to submission of an electronic search tool and the need to protect proprietary information therein, and a second petition under 37 CFR 1.183, requesting relief from the § 1.98 provision which requires filing paper copies of references being cited in each of many related applications.

A Decision on the petition under 37 CFR 1.182 re the electronic search tool will be issued in due course.

The petition under 37 CFR 1.183 re the submission of 3 paper copies of IDS citations in a holding application is Granted to the extent set forth below.

The Decision is set forth in five parts:

- Part I. Background
- Part II. Petition Under 37 CFR 1.182 - Electronic Search Tool
- Part III. Petition Under 37 CFR 1.183 - Paper Copies

RECEIVED
DEC 03 1999
OBLON, SPIVAK, McCLELLAND
MAIER & NEUSTADT P.C.

- Part IV. Summary
- Part V. Further Correspondence

Part I. Background

The instant national stage application filed under 35 U.S.C. 371 currently contains claims 77-153 with three independent claims. The instant application is one of about 200 U.S. applications (either filed or to be filed) with each U.S. application having as many as 40 corresponding foreign applications (either filed or to be filed), the applications relating to different aspects of the invention. An Information Disclosure Citation List has been submitted that lists 259 U.S. patents, 369 foreign patent documents, and 43 other references for a total of 671 citations. Additionally, a list of related cases has been supplied containing 31 U.S. applications and 52 PCT applications. Paper copies have not been supplied in the related applications of any of the citations or the identified related cases.

37 CFR 1.56(b)(1) requires disclosure to the Office of information that "establishes, by itself or in combination with other information, a prima facie case of unpatentability of a claim...." Such disclosure can be made by an Information Disclosure Statement (IDS) in the manner prescribed by 37 CFR 1.97 and 1.98. 37 CFR 1.56(a).

Petitioner asks "[w]hether the information cited in the manner proposed in [petition] Section 3.1.1 ... is a disclosure that is sufficient to meet the requirements of 37 CFR § 1.56." To the extent that this question refers to the content of the disclosure and the particulars of the subject applications, the Office will not answer the question. It is Office practice not to attempt to define how an individual "ensures" compliance with the rule in a particular application. See, e.g., MPEP 2004. Because determinations on this issue require an evaluation of the intent of the party involved, the Office declines to investigate the question. See MPEP 2010. To the extent that Petitioner's question concerns the form in which the disclosure is provided, rule 56 permits a disclosure in a combination of paper and electronic formats.

Petitioner, in addition to meeting the duty set forth in 37 CFR 1.56 to disclose material information, also wishes to disclose to the Office information that may not meet the definition of

materiality as set forth in the rule[1]. Information identified by U.S. or foreign examiners in any of the related U.S. and foreign applications would be cited in each of the related U.S. applications.[2] In addition, Petitioner seeks to submit other information in each of the related U.S. applications, such as all the co-pending U.S. applications that relate to the invention (useful for determining possible double patenting rejections), and foreign search reports. Petition, page 4.

Rather than be required to submit, via a paper copy, each piece of information in each application each time the information is obtained, Petitioner seeks to have:

(1)(a) one application (the instant application) identified as a "holding" application which would contain a complete set of paper copies of references; the paper copies to be submitted in only the "holding" application;

(b) the other related pending U.S. applications, hereafter referred to as the bulk filing applications, will not contain the paper set of reference copies but will contain other information, e.g., a copy of the decision on petition[3] permitting such procedure and a copy of the Form 1449 (or equivalent);[4] and

(2) an "electronic search tool"[5] containing different types of information.

The information supplied via the paper copies would be updated monthly, rather than as received from U.S. and foreign examiners, and cancellation of this arrangement would be an option for both.

---

[1]Reference to MPEP 2001.05, Petition, page 3.

[2]Petition, page 3. The present petition requesting relief does not set forth any commitment nor intent by applicant to screen such information for relevancy to each of the U.S. applications in which the information is being cited.

[3]The original of which would be in the instant holding application.

[4]See, Petition under 37 CFR 1.182, infra.

[5]See, Petition under 37 CFR 1.183, infra.

Petitioner and the Office upon notice. These, and other more specific conditions, are discussed in further detail in regard to the § 1.182 petition, below.

Petitioner has essentially requested relief in two areas: (1) treatment of information in an electronic search tool, to be submitted independent of any particular application, as in compliance with IDS submission requirements for all bulk filing applications, and (2) the ability to provide the paper copies of each reference in an IDS submission in only one of the bulk filing applications (the instant holding application) as well as two additional sets of copies rather than as is normally required in each application for which the reference (IDS citation) is to be considered. These two areas of relief are independent of each other and drawn toward different regulations. Accordingly, the petition has been treated as two petitions, and the present decision addresses the two areas of requested relief separately. While it is undeniable that relief in both areas would be of benefit to Petitioner, the granting of relief in one area does not, in fact, require the granting of relief in the other. Moreover, in view of the need to further consider the requested relief related to the electronic search tool, deciding the requested relief issues separately permits at this time a partial grant of the original petition.[6]

Part II. Petition under 37 CFR 1.182- Electronic Search Tool

The issues involving the electronic search tool are more extensive than those relating to the requirement for paper copies in each bulk filing application and more time is needed to fully consider and address them. Accordingly, the petition under § 1.182 shall not be decided at this time and is not treated in the instant decision on the § 1.183 petition although it will continue to be considered, with a decision rendered in due course.

[6]It is recognized that petitioner believes the issues presented by the petition may not be decided independent of one another as both the paper copy issue and the electronic search tool issue represent the most complete solution to duty of disclosure issues under 37 CFR 1.56, Petition, fn. 5.

Part III. Petition Under 37 CFR 1.183 - Paper Copies

The submitted petition fee of $130 will be treated as the § 1.183 petition fee.

37 CFR 1.98 requires that any information disclosure statement provide a copy of all patents, publications or other information submitted under 37 CFR 1.97 for consideration by the Office. 37 CFR 1.97 notes that information disclosure statements are considered in regard to the application in which they are filed. See also MPEP 609, page 600-102, right-hand column, and page 600-103, left-hand column.

Paper copies: Petitioner notes that the instant application is one of 200 bulk filing applications that will be or have been filed in regard to a particular technology. Accordingly, Petitioner requests that individual paper copies of each reference, brought to the attention of the Office in regard to any one individual application, not be required to be submitted in each such application. Rather, it is requested that three complete sets of paper copies be permitted to be filed: one set for the instant application which will be designated as a holding application; one set to be used to establish new subclasses for the technology; and one set to be used as a reference set should either or both of the other two sets become corrupted (Petition, pages 6 and 7).[7]

Once past the initial IDS submission, it is proposed that applicant would update the IDS submissions once a month, rather than every time a new reference is found, although the time frames required by § 1.97 would have to be complied with, which may mean that submissions may occur more frequently than once a month.

Form 1449: In addition to submission of the three sets of paper copies in the instant "holding" application, the petition proposes that each of the bulk filing applications would receive a Form 1449 listing the reference citations (Petition, page 7) and the Form 1449 (in each of the bulk filing applications) would be updated, pursuant to the time requirements of § 1.97, each time the three sets of paper copies are updated. The petition is

---

[7] It would presumably up to the Technology Center to determine how best to store the reference set and how it is to be accessed.

silent as to whether other types of information that may be submitted in the holding application IDS, e.g., concise explanations of foreign language documents under § 1.98(a)(3), would also be supplied in all the bulk filing applications.

Suspension of action: In view of the use of the instant application as a holding application (to contain a complete set of paper copies of reference citations, which can be consulted by the examiner when examining any of the other bulk filing applications that have a Form 1449 but not the paper copies), the petition states that upon allowance of the instant holding application the right is reserved to file a petition to suspend action in the instant application so that the application can remain as the holding application (Petition, page 7). Alternatively, upon agreement of the Assignee and a Director of the Technology Center involved, an alternate application may be designated as the holding application.

New subclasses: The petition envisions an affirmative duty on the Technology Center to establish new subclasses that will include each of the references submitted during the course of prosecution of the bulk filing applications.[8] In addition, the Office is to agree that "[e]xaminers will be required to search these newly created subclasses" (from submissions by the Assignee and later by others) "as part of the routine patent prosecution process." Petition, page 8.

Termination: Petitioner seeks a right of termination,[9] which is to be a mutual option. Termination is to be by written notice, to the attorney of record if the Office terminates and the filing of a termination request and by contacting the Director of TC 2800 if applicant terminates. Conventional IDS procedures would begin three months after notice of termination.

---

[8]The new subclasses will later be supplemented by references supplied by others who may file applications related to the same technology.

[9]Although termination is discussed under a section related to licensing of the electronic search tool and the petition generally (Petition, pages 10 and 11), it is presumed that Petitioner intends to have the termination provision apply to the waiver of paper copies if that alone is granted.

37 CFR 1.183 provides relief for extraordinary situations, when justice requires suspension of any requirement of the regulations which is not a requirement of the statutes. The instant petition urges that not only would applicant be spared the necessity of submitting duplicative paper copies of references in 200 applications, but also the Office would benefit from not having to handle and store the duplicative sets of copies. While there may be some negative effects from the Office's point of view in terms of making the copies available to different examiners handling the various applications,[10] on balance, there is seen to be sufficient benefit to justify waiver in this instance.

Accordingly, the petition under 37 CFR 1.183 is granted to the extent indicated and under the terms and conditions as are set forth below.[11]

---

[10]Even thought the technology of the applications may be related, the specific claims of the applications may require different classifications of the applications and the quantity of applications would dictate the need for more than one examiner to timely examine the applications.

[11]The waiver being granted in this instance is not intended to set a general precedent where there is more than one application containing related subject matter. The Office, however, intends to use the instant grant to study whether the opportunity for waiver can be extended to other applicants in similar circumstances, and whether a more general program can be announced. One factor that will be considered is the extent to which relevant information (that may not be necessarily required by § 1.56(b) but which would nonetheless be useful to the examiner, e.g., § 1.56(a)(1) and (2)), is submitted rather than huge dumps of nonrelevant or marginally relevant information.

It is noted that while the petition only refers to the submission of citations that are made by both U.S. and foreign examiners, the term "include" is used (Petition, page 2) which is open ended. The Petition states that it is the intention to submit a copy of every reference identified both by U.S. examiners in the 200 U.S. applications and by foreign examiners in as many as 40 corresponding foreign applications for each U.S. application (Petition, page 3). It has not been stated whether the current 671 reference citations currently of record represent only those citations made by U.S. and foreign examiners or whether they include citations from other sources, such as a

The § 1.98(a)(2) requirement for (the submission of) a copy of each IDS citation in a bulk filing application will be waived in the bulk filing application provided that the following 8 conditions are complied with:

1) Three paper copies of each IDS citation are or have been submitted to the Office;

2) The (bulk filing) application for which waiver of § 1.98(a)(2) is desired refers to the instant holding application, such as by a claim of priority under 35 U.S.C. 120, or as containing related technology;

3) The information is or has also been cited in the holding application;

   Note: Applicant is not required to cite in each bulk filing application every item of information that is cited in the instant holding application. Items should be cited in each bulk filing application on the basis of relevancy and materiality to the particular claims in the bulk filing application and what each piece of information teaches.

   A waiver is not granted (for the requirement to supply a paper copy of an IDS citation in another bulk filing application) where the citation is not, or has not been, made in the instant holding application.

4) A copy of this Decision is filed in the bulk filing application;

5) Explanatory information related to a particular citation, such as the concise explanation of a foreign language reference under § 1.98(a)(2), once submitted in the holding application must be supplied in each bulk filing application where the citation is made.

6) The Office accepts and specifically reserves the right to terminate the waiver grant in regard to § 1.98(a)(2) without provision of reasons. In such event, a two month period will be given where paper copies would

---

preexamination search or third party citations. See also Petition, page 19.

have to be supplied in all applications where new citations are made. Should a termination of the waiver be desired by the Office, the Office will provide written notice to the correspondence address of record. Termination by applicant may be by returning to compliance with § 1.98(a)(2) without formal notice thereof and no transition/continuing period after termination is required.

7) The grant of the § 1.183 petition re § 1.98(a)(2) does <u>not</u> indicate that the Office would favorably treat a petition to suspend action under § 1.103(a) should the instant application be allowed. Issuance of the instant application as a patent is not seen to terminate its usefulness either: (1) as a holding application for references by examiners working on other related applications,[12] or (2) as a vehicle for the storage of references to be cited even after the patent issues (35 U.S.C. 301, 37 CFR 1.501, and MPEP 2202). Should the instant application become abandoned, the issue of continued introduction of paper copies of new citations could be taken up at that time. The Office, however, may consider suspending or taking other appropriate action in the instant holding application in the event the holding application is allowed, if it is in the best interest of the Office to do so.

8) The Office has established a series of Official Digests in Class 174 based on the technology represented by the instant invention (a classification schedule thereof is attached). As is the case will all Digests, their usefulness will be continually evaluated. The Office will place the holding application's references in the Digests as they are determined to require such placement and as new ones are brought to the attention of the Office either by Petitioner or a third party. A search of the Digests themselves or what they contain (such as the holding application or reference copy sets), either in paper copy or electronic form, will be

---

[12]The patent file can be kept in the Technology Center for easy reference, or rather than rely upon the patent, either the reference set of paper copies could be utilized, or the Office may decide to rely on the Digests being created.

conducted when mandatory based on the classification of the claims, or when deemed advisable - on a case by case basis.

Part IV. Summary

A Decision on the Petition under 37 CFR 1.182, drawn toward submission of the electronic search tool, will be acted upon in due course when all outstanding issues are resolved.

The petition under 37 CFR 1.183 agreeing to supply three copies of each IDS citation in a holding application and requesting waiver of the paper copy requirement for submission in every related application under § 1.98(a)(2) is granted, however, the following is not agreed to:

- the grant of a future petition under 37 CFR 1.103 for suspension from publication of the holding application should it be allowed,
- the required search of subclasses from one of the three sets of paper copies and placement of one of the other sets of paper copies therein, and
- any termination provision more than two months (rather than the three months that the petition sets forth) from notice of termination.

Part V. Further Correspondence

Further correspondence with respect to this matter should be addressed to Hiram H. Bernstein, Senior Legal Advisor, Special Program Law Office, as follows:

By mail: Commissioner of Patents and Trademarks
Box DAC
Washington, D.C. 20231

By FAX: (703) 308-6916
Attn: Special Program Law Office

By hand: Special Program Law Office
Crystal Plaza Four, Suite 3C23
2201 South Clark Place
Arlington, VA 22202

Telephone inquiries specific to this matter should be directed to Mr. Bernstein at (703) 305-9285.

The instant application will be retained by this Office: for a period of TWO MONTHS to await any response to the instant Decision, and for the purpose of continuing review of the § 1.182 petition re the electronic search tool.

Robert J. Spar
Director
Special Program Law Office
Office of the Deputy Assistant Commissioner
for Patent Policy and Projects

Attachment: List of Digests 13-33

Digest 13 HIGH VOLTAGE CABLE (E.G., ABOVE 10KV, CORONA PREVENTION, ETC.)
Digest 14 . Having a particular cable application (e.g., winding, etc.)
Digest 15 .. In a power generation system (e.g., prime-mover dynamo, generator system, etc.)
Digest 16 .. In a motive power system (e.g., electric motor control system, etc.)
Digest 17 .. In an electric power conversion, regulation, or protection system
Digest 18 .. In a power distribution network
Digest 19 .. In a dynamo-electric machine
Digest 20 ... Stator
Digest 21 ... Rotor
Digest 22 ... Winding, per se
Digest 23 .. In a circuit breaker, relay, or switch
Digest 24 .. In an inductive device (e.g., reactor, electromagnet, etc.)
Digest 25 ... Transformer
Digest 26 . Having a plural-layer insulation system
Digest 27 .. Including a semiconductive layer
Digest 28 ... Plural semiconductive layers
Digest 29 . Having a semiconductive layer
Digest 30 . Having insulation with a particular dimension or geometry
Digest 31 . Having a shield or metallic layer
Digest 32 . Having means for cooling
Digest 33 . Method of cable manufacture, assembly, repair, or splicing

UNITED STATES DEPARTMENT OF COMMERCE
Patent and Trademark Office
ASSISTANT SECRETARY AND COMMISSIONER
OF PATENTS AND TRADEMARKS
Washington, D.C. 20231

OIPE
SEP 2 3 2002
PATENT & TRADEMARK OFFICE

File 12/3/99

Decision 2-1-00

Paper No. 11

COPY MAILED
DEC 0 1 1999
SPECIAL PROGRAMS OFFICE
DAC FOR PATENTS

Oblon Spivak McClelland Maier & Neustadt
1755 Jefferson Davis Highway
Fourth Floor
Arlington VA 22202

In re Application of
Mats Leijon, et al
Application No. 09/147,325
Filed: February 17, 1999
Attorney Docket No. 9847-0001-6X

: RESPONSE TO PETITION UNDER 37 CFR 1.182 SEEKING SPECIAL TREATMENT RELATING TO AN ELECTRONIC SEARCH TOOL, AND DECISION ON PETITION UNDER 37 CFR 1.183 SEEKING WAIVER OF REQUIREMENTS UNDER 37 CFR 1.98

This is a response to a September 29, 1999 Petition Under 37 CFR 1.182, requesting relief from the current requirements for Information Disclosure Statements under 37 CFR 1.98 in view of the need to file multiple applications relating to different aspects of a particular invention. The petition will be treated as two separate petitions: a first petition under 37 CFR 1.182, relating to submission of an electronic search tool and the need to protect proprietary information therein, and a second petition under 37 CFR 1.183, requesting relief from the § 1.98 provision which requires filing paper copies of references being cited in each of many related applications.

A Decision on the petition under 37 CFR 1.182 re the electronic search tool will be issued in due course.

The petition under 37 CFR 1.183 re the submission of 3 paper copies of IDS citations in a holding application is Granted to the extent set forth below.

The Decision is set forth in five parts:

- Part I. Background
- Part II. Petition Under 37 CFR 1.182 - Electronic Search Tool
- Part III. Petition Under 37 CFR 1.183 - Paper Copies

RECEIVED
DEC 0 3 1999
OBLON, SPIVAK, McCLELLAND
MAIER & NEUSTADT PC

- Part IV. Summary
- Part V. Further Correspondence

Part 1. Background

The instant national stage application filed under 35 U.S.C. 371 currently contains claims 77-153 with three independent claims. The instant application is one of about 200 U.S. applications (either filed or to be filed) with each U.S. application having as many as 40 corresponding foreign applications (either filed or to be filed), the applications relating to different aspects of the invention. An Information Disclosure Citation List has been submitted that lists 259 U.S. patents, 369 foreign patent documents, and 43 other references for a total of 671 citations. Additionally, a list of related cases has been supplied containing 31 U.S. applications and 52 PCT applications. Paper copies have not been supplied in the related applications of any of the citations or the identified related cases.

37 CFR 1.56(b)(1) requires disclosure to the Office of information that "establishes, by itself or in combination with other information, a prima facie case of unpatentability of a claim...." Such disclosure can be made by an Information Disclosure Statement (IDS) in the manner prescribed by 37 CFR 1.97 and 1.98. 37 CFR 1.56(a).

Petitioner asks "[w]hether the information cited in the manner proposed in [petition] Section 3.1.1 ... is a disclosure that is sufficient to meet the requirements of 37 CFR § 1.56." To the extent that this question refers to the content of the disclosure and the particulars of the subject applications, the Office will not answer the question. It is Office practice not to attempt to define how an individual "ensures" compliance with the rule in a particular application. See, e.g., MPEP 2004. Because determinations on this issue require an evaluation of the intent of the party involved, the Office declines to investigate the question. See MPEP 2010. To the extent that Petitioner's question concerns the form in which the disclosure is provided, rule 56 permits a disclosure in a combination of paper and electronic formats.

Petitioner, in addition to meeting the duty set forth in 37 CFR 1.56 to disclose material information, also wishes to disclose to the Office information that may not meet the definition of

materiality as set forth in the rule[1]. Information identified by U.S. or foreign examiners in any of the related U.S. and foreign applications would be cited in each of the related U.S. applications.[2] In addition, Petitioner seeks to submit other information in each of the related U.S. applications, such as all the co-pending U.S. applications that relate to the invention (useful for determining possible double patenting rejections), and foreign search reports. Petition, page 4.

Rather than be required to submit, via a paper copy, each piece of information in each application each time the information is obtained, Petitioner seeks to have:

(1)(a) one application (the instant application) identified as a "holding" application which would contain a complete set of paper copies of references; the paper copies to be submitted in only the "holding" application;

(b) the other related pending U.S. applications, hereafter referred to as the bulk filing applications, will not contain the paper set of reference copies but will contain other information, e.g., a copy of the decision on petition[3] permitting such procedure and a copy of the Form 1449 (or equivalent);[4] and

(2) an "electronic search tool"[5] containing different types of information.

The information supplied via the paper copies would be updated monthly, rather than as received from U.S. and foreign examiners, and cancellation of this arrangement would be an option for both

---

[1]Reference to MPEP 2001.05, Petition, page 3.

[2]Petition, page 3. The present petition requesting relief does not set forth any commitment nor intent by applicant to screen such information for relevancy to each of the U.S. applications in which the information is being cited.

[3]The original of which would be in the instant holding application.

[4]See, Petition under 37 CFR 1.182, infra.

[5]See, Petition under 37 CFR 1.183, infra.

Petitioner and the Office upon notice. These, and other more specific conditions, are discussed in further detail in regard to the § 1.182 petition, below.

Petitioner has essentially requested relief in two areas: (1) treatment of information in an electronic search tool, to be submitted independent of any particular application, as in compliance with IDS submission requirements for all bulk filing applications, and (2) the ability to provide the paper copies of each reference in an IDS submission in only one of the bulk filing applications (the instant holding application) as well as two additional sets of copies rather than as is normally required in each application for which the reference (IDS citation) is to be considered. These two areas of relief are independent of each other and drawn toward different regulations. Accordingly, the petition has been treated as two petitions, and the present decision addresses the two areas of requested relief separately. While it is undeniable that relief in both areas would be of benefit to Petitioner, the granting of relief in one area does not, in fact, require the granting of relief in the other. Moreover, in view of the need to further consider the requested relief related to the electronic search tool, deciding the requested relief issues separately permits at this time a partial grant of the original petition.[6]

Part II. Petition under 37 CFR 1.182- Electronic Search Tool

The issues involving the electronic search tool are more extensive than those relating to the requirement for paper copies in each bulk filing application and more time is needed to fully consider and address them. Accordingly, the petition under § 1.182 shall not be decided at this time and is not treated in the instant decision on the § 1.183 petition although it will continue to be considered, with a decision rendered in due course.

---

[6]It is recognized that petitioner believes the issues presented by the petition may not be decided independent of one another as both the paper copy issue and the electronic search tool issue represent the most complete solution to duty of disclosure issues under 37 CFR 1.56, Petition, fn. 5.

Part III. Petition Under 37 CFR 1.183 - Paper Copies

The submitted petition fee of $130 will be treated as the § 1.183 petition fee.

37 CFR 1.98 requires that any information disclosure statement provide a copy of all patents, publications or other information submitted under 37 CFR 1.97 for consideration by the Office. 37 CFR 1.97 notes that information disclosure statements are considered in regard to the application in which they are filed. See also MPEP 609, page 600-102, right-hand column, and page 600-103, left-hand column.

Paper copies: Petitioner notes that the instant application is one of 200 bulk filing applications that will be or have been filed in regard to a particular technology. Accordingly, Petitioner requests that individual paper copies of each reference, brought to the attention of the Office in regard to any one individual application, not be required to be submitted in each such application. Rather, it is requested that three complete sets of paper copies be permitted to be filed: one set for the instant application which will be designated as a holding application; one set to be used to establish new subclasses for the technology; and one set to be used as a reference set should either or both of the other two sets become corrupted (Petition, pages 6 and 7).[1]

Once past the initial IDS submission, it is proposed that applicant would update the IDS submissions once a month, rather than every time a new reference is found, although the time frames required by § 1.97 would have to be complied with, which may mean that submissions may occur more frequently than once a month.

Form 1449: In addition to submission of the three sets of paper copies in the instant "holding" application, the petition proposes that each of the bulk filing applications would receive a Form 1449 listing the reference citations (Petition, page 7) and the Form 1449 (in each of the bulk filing applications) would be updated, pursuant to the time requirements of § 1.97, each time the three sets of paper copies are updated. The petition is

---

[1] It would presumably up to the Technology Center to determine how best to store the reference set and how it is to be accessed.

silent as to whether other types of information that may be submitted in the holding application IDS, e.g., concise explanations of foreign language documents under § 1.98(a)(3), would also be supplied in all the bulk filing applications.

Suspension of action: In view of the use of the instant application as a holding application (to contain a complete set of paper copies of reference citations, which can be consulted by the examiner when examining any of the other bulk filing applications that have a Form 1449 but not the paper copies), the petition states that upon allowance of the instant holding application the right is reserved to file a petition to suspend action in the instant application so that the application can remain as the holding application (Petition, page 7). Alternatively, upon agreement of the Assignee and a Director of the Technology Center involved, an alternate application may be designated as the holding application.

New subclasses: The petition envisions an affirmative duty on the Technology Center to establish new subclasses that will include each of the references submitted during the course of prosecution of the bulk filing applications.[3] In addition, the Office is to agree that "[e]xaminers will be required to search these newly created subclasses" (from submissions by the Assignee and later by others) "as part of the routine patent prosecution process." Petition, page 8.

Termination: Petitioner seeks a right of termination,[4] which is to be a mutual option. Termination is to be by written notice, to the attorney of record if the Office terminates and the filing of a termination request and by contacting the Director of TC 2800 if applicant terminates. Conventional IDS procedures would begin three months after notice of termination.

---

[3]The new subclasses will later be supplemented by references supplied by others who may file applications related to the same technology.

[4]Although termination is discussed under a section related to licensing of the electronic search tool and the petition generally (Petition, pages 10 and 11), it is presumed that Petitioner intends to have the termination provision apply to the waiver of paper copies if that alone is granted.

37 CFR 1.183 provides relief for extraordinary situations, when justice requires suspension of any requirement of the regulations which is not a requirement of the statutes. The instant petition urges that not only would applicant be spared the necessity of submitting duplicative paper copies of references in 200 applications, but also the Office would benefit from not having to handle and store the duplicative sets of copies. While there may be some negative effects from the Office's point of view in terms of making the copies available to different examiners handling the various applications,[10] on balance, there is seen to be sufficient benefit to justify waiver in this instance.

Accordingly, the petition under 37 CFR 1.183 is granted to the extent indicated and under the terms and conditions as are set forth below.[11]

---

[10]Even thought the technology of the applications may be related, the specific claims of the applications may require different classifications of the applications and the quantity of applications would dictate the need for more than one examiner to timely examine the applications.

[11]The waiver being granted in this instance is not intended to set a general precedent where there is more than one application containing related subject matter. The Office, however, intends to use the instant grant to study whether the opportunity for waiver can be extended to other applicants in similar circumstances, and whether a more general program can be announced. One factor that will be considered is the extent to which relevant information (that may not be necessarily required by § 1.56(b) but which would nonetheless be useful to the examiner, e.g., § 1.56(a)(1) and (2)), is submitted rather than huge dumps of nonrelevant or marginally relevant information.

It is noted that while the petition only refers to the submission of citations that are made by both U.S. and foreign examiners, the term "include" is used (Petition, page 2) which is open ended. The Petition states that it is the intention to submit a copy of every reference identified both by U.S. examiners in the 200 U.S. applications and by foreign examiners in as many as 40 corresponding foreign applications for each U.S. application (Petition, page 3). It has not been stated whether the current 371 reference citations currently of record represent only those citations made by U.S. and foreign examiners or whether they include citations from other sources, such as a

The § 1.98(a)(2) requirement for (the submission of) a copy of each IDS citation in a bulk filing application will be waived in the bulk filing application provided that the following 8 conditions are complied with:

1) Three paper copies of each IDS citation are or have been submitted to the Office;

2) The (bulk filing) application for which waiver of § 1.98(a)(2) is desired refers to the instant holding application, such as by a claim of priority under 35 U.S.C. 120, or as containing related technology;

3) The information is or has also been cited in the holding application;

Note: Applicant is not required to cite in each bulk filing application every item of information that is cited in the instant holding application. Items should be cited in each bulk filing application on the basis of relevancy and materiality to the particular claims in the bulk filing application and what each piece of information teaches.

A waiver is not granted (for the requirement to supply a paper copy of an IDS citation in another bulk filing application) where the citation is not, or has not been, made in the instant holding application.

4) A copy of this Decision is filed in the bulk filing application;

5) Explanatory information related to a particular citation, such as the concise explanation of a foreign language reference under § 1.98(a)(2), once submitted in the holding application must be supplied in each bulk filing application where the citation is made.

6) The Office accepts and specifically reserves the right to terminate the waiver grant in regard to § 1.98(a)(2) without provision of reasons. In such event, a two month period will be given where paper copies would

---

preexamination search or third party citations. See also Petition, page 19.

have to be supplied in all applications where new citations are made. Should a termination of the waiver be desired by the Office, the Office will provide written notice to the correspondence address of record. Termination by applicant may be by returning to compliance with § 1.98(a)(2) without formal notice thereof and no transition/continuing period after termination is required.

7) The grant of the § 1.183 petition re § 1.98(a)(2) does <u>not</u> indicate that the Office would favorably treat a petition to suspend action under § 1.103(a) should the instant application be allowed. Issuance of the instant application as a patent is not seen to terminate its usefulness either: (1) as a holding application for references by examiners working on other related applications,[11] or (2) as a vehicle for the storage of references to be cited even after the patent issues (35 U.S.C. 301, 37 CFR 1.501, and MPEP 2202). Should the instant application become abandoned, the issue of continued introduction of paper copies of new citations could be taken up at that time. The Office, however, may consider suspending or taking other appropriate action in the instant holding application in the event the holding application is allowed, if it is in the best interest of the Office to do so.

8) The Office has established a series of Official Digests in Class 174 based on the technology represented by the instant invention (a classification schedule thereof is attached). As is the case will all Digests, their usefulness will be continually evaluated. The Office will place the holding application's references in the Digests as they are determined to require such placement and as new ones are brought to the attention of the Office either by Petitioner or a third party. A search of the Digests themselves or what they contain (such as the holding application or reference copy sets), either in paper copy or electronic form, will be

---

[11]The patent file can be kept in the Technology Center for easy reference, or rather than rely upon the patent, either the reference set of paper copies could be utilized, or the Office may decide to rely on the Digests being created.

conducted when mandatory based on the classification of the claims, or when deemed advisable - on a case by case basis.

Part IV. Summary

A Decision on the Petition under 37 CFR 1.182, drawn toward submission of the electronic search tool, will be acted upon in due course when all outstanding issues are resolved.

The petition under 37 CFR 1.183 agreeing to supply three copies of each IDS citation in a holding application and requesting waiver of the paper copy requirement for submission in every related application under § 1.98(a)(2) is granted, however, the following is not agreed to:

- the grant of a future petition under 37 CFR 1.103 for suspension from publication of the holding application should it be allowed,
- the required search of subclasses from one of the three sets of paper copies and placement of one of the other sets of paper copies therein, and
- any termination provision more than two months (rather than the three months that the petition sets forth) from notice of termination.

Part V. Further Correspondence

Further correspondence with respect to this matter should be addressed to Hiram H. Bernstein, Senior Legal Advisor, Special Program Law Office, as follows:

By mail: Commissioner of Patents and Trademarks
Box DAC
Washington, D.C. 20231

By FAX: (703) 308-6916
Attn: Special Program Law Office

By hand: Special Program Law Office
Crystal Plaza Four, Suite 3C23
2201 South Clark Place
Arlington, VA 22202

Telephone inquiries specific to this matter should be directed to Mr. Bernstein at (703) 305-9285.

The instant application will be retained by this Office: for a period of TWO MONTHS to await any response to the instant Decision, and for the purpose of continuing review of the § 1.182 petition re the electronic search tool.

Robert J. Spar
Director
Special Program Law Office
Office of the Deputy Assistant Commissioner
for Patent Policy and Projects

Attachment: List of Digests 13-33

Digest 13 HIGH VOLTAGE CABLE (E.G., ABOVE 10KV, CORONA PREVENTION, ETC.)
Digest 14 . Having a particular cable application (e.g., winding, etc.)
Digest 15 . . In a power generation system (e.g., prime-mover dynamo, generator system, etc.)
Digest 16 . . In a motive power system (e.g., electric motor control system, etc.)
Digest 17 . . In an electric power conversion, regulation, or protection system
Digest 18 . . In a power distribution network
Digest 19 . . In a dynamo-electric machine
Digest 20 . . . Stator
Digest 21 . . . Rotor
Digest 22 . . . Winding, per se
Digest 23 . . In a circuit breaker, relay, or switch
Digest 24 . . In an inductive device (e.g., reactor, electromagnet, etc.)
Digest 25 . . . Transformer
Digest 26 . Having a plural-layer insulation system
Digest 27 . . Including a semiconductive layer
Digest 28 . . . Plural semiconductive layers
Digest 29 . Having a semiconductive layer
Digest 30 . Having insulation with a particular dimension or geometry
Digest 31 . Having a shield or metallic layer
Digest 32 . Having means for cooling
Digest 33 . Method of cable manufacture, assembly, repair, or splicing

UNITED STATES PATENT AND TRADEMARK OFFICE

COMMISSIONER FOR PATENTS
UNITED STATES PATENT AND TRADEMARK OFFICE
WASHINGTON, D.C. 20231
www.uspto.gov

Paper No. 41

John P. De Luca
DYKEMA GOSSETT PLLC
1300 I Street N.W.
Washington, D.C. 20005

NOV - 6

In re Application of	:	
LEIJON et al.	:	DECISION
Application No. 08/952,996	:	ON PETITION
Filed: April 10, 1998	:	
Attorney Docket No. 66291-157	:	

This is a decision on the petition, filed September 23, 2002 requesting that the prosecution in the above-identified patent application be suspended for a period of six months under 37 C.F.R. § 1.103(a), and an additional six months, pursuant to MPEP § 1002.02(c)9, for a total of twelve months, beginning with the filing of the subject Petition.

Regarding a suspension on request of the applicant, 37 CFR 1.103(a) provides:

> (a) Suspension for cause. On request of the applicant, the Office may grant a suspension of action by the Office under this paragraph for good and sufficient cause. The Office will not suspend action if a reply by applicant to an Office action is outstanding. Any petition for suspension of action under this paragraph must specify a period of suspension not exceeding six months. Any petition for suspension of action under this paragraph must also include:
> (1) A showing of good and sufficient cause for suspension of action; and
> (2) The fee set forth in § 1.17(h), unless such cause is the fault of the Office

In the Request, to establish cause, Petitioner asserts the claims and issues of the instant application are relevant to the claims and issues in at least U.S. Application No. 08/973,019 which Petitioner has appealed. Further, because the appeal of '019 will materially affect the prosecution of the instant application, the instant application should be suspended pending the decision on appeal of '019.

A review of the record indicates the instant application has claims and issues that are relevant to appealed case '019 . The claims in the instant application and appealed case '019 are both directed toward the particular structure of the high voltage cable. Consequently, since the

outcome of appealed case '019 will materially affect prosecution of the instant application, good and sufficient reasons have been demonstrated to warrant suspension of action.

Accordingly, the petition to suspend prosecution is GRANTED for a period of up to twelve (12) months starting from the filing of petition, September 23, 2002.

Inquiries regarding this decision should be directed to Richard Seidel at (703) 306-3431.

Richard Seidel, Director
Technology Center 2800
Semiconductors, Electrical and Optical
Systems and Components

UNITED STATES PATENT AND TRADEMARK OFFICE

COMMISSIONER FOR PATENTS
UNITED STATES PATENT AND TRADEMARK OFFICE
WASHINGTON, D.C. 20231
www.uspto.gov

Paper No. 27

GRAHAM & JAMES LLP
885 THIRD AVENUE, 21ST FLOOR
NEW YORK, NEW YORK 10022-4834

COPY MAILED

JAN 18 2001

OFFICE OF PETITIONS
A/C PATENTS

In re Application of :
Henrik Dalboge et al :
Application No. 08/953,217 :
Filed: October 17, 1997 :
Attorney Docket No. 44457.010100 :

ON PETITION

This is a decision on the petition under 37 CFR 1.137(b), filed by facsimile transmission on January 10, 20001, to revive the above-identified application.

The petition is **GRANTED**.

The above-identified application is being revived solely for purposes of continuity with the continued prosecution application (CPA) filed on January 10, 2001.

As authorized, the $1,240 petition fee and the $710 filing fee for the CPA will be charged to petitioner's Deposit Account No. 50-1561.

Telephone inquiries concerning this decision should be directed to the undersigned at (703) 305-8680. Any questions concerning the examination process of this application should be directed to the Technology Center.

The application file is being forwarded to Technology Center AU 1646 for processing the CPA and for action in due course on the response under 37 CFR 1.116 received January 10, 2001.

Frances Hicks

Frances Hicks
Lead Petitions Examiner
Office of Petitions
Office of the Deputy Commissioner
for Patent Examination Policy

UNITED STATES PATENT AND TRADEMARK OFFICE

Commissioner for Patents
United States Patent and Trademark Office
Washington, D.C. 20231
www.uspto.gov

Paper No. 48

EUGENE C. RZUCIDLO
GREENBERG TRAURIG LLP
885 THIRD AVENUE, 8TH FLOOR
NEW YORK, NEW YORK 10022

COPY MAILED

MAY 14 2002

OFFICE OF PETITIONS

In re Application of
Henrik Dalboge et al
Application No. 08/953,217
Filed: October 17, 1997
Attorney Docket No. 44457.010100

:DECISION GRANTING PETITION
:UNDER 37 CFR 1.182 TO
:WITHDRAW NOTICE OF APPEAL

This a decision on the petition under 37 CFR I.182, filed by facsimile transmission May 13, 2002, which is being treated as a request that the USPTO disregard the Notice of Appeal filed October 15, 2001.

The petition is **granted**.

Petitioner requests relief from the filing of a Notice of Appeal on October 15, 2001, in that, while the claims in this continuing application met the "twice rejected" test permitting appellate review, the case was not then under a final rejection. Petitioner points to the filing on October 15, 2001, of a timely reply to the outstanding non final Office action, and the examiner's indication in the Advisory Action of October 24, 2001, that (1) the reply did not *prima facie* place this application in condition for allowance, and (2) the accompanying declaration would not be considered. Petitioner asserts that if prosecution, in lieu of the appeal, is continued, the examiner will also be able to consider additional relevant information from an Interference panel decision.

A review of the record reveals that reply of October 15, 2001, includes an amendment and a request for reconsideration of the outstanding rejections. As such, the reply is adequate to continue the prosecution and maintain the pendency of the above-captioned application, if the Notice of Appeal were to be withdrawn at this time. It is agreed that, under the circumstances of this case, the completion of prosecution before the USPTO would be facilitated by consideration of the reply and additional information and not by proceeding under the more limited strictures of appellate review under 37 CFR §§ 1.191 *et seq*, at this time. It follows that, under the extraordinary circumstances of this application, on petition, the Notice of Appeal can be treated as

withdrawn in favor of the reply of October 25, 2001. That reply tolled the period for response to the outstanding Office action.

The fees paid to date were owed at the time they were paid, and as such, are not refundable. The five month extension of time fee engendered by the Notice of Appeal of October 15, 2001, and necessary to maintain pendency in the absence of the Brief on Appeal has also been charged to counsel's deposit account.

This file is being forwarded to Technology Center 1632 for further treatment of the reply of October 15, 2001. Under the circumstances of this case, the examiner may ignore the Notice of Appeal of October 15, 2001, and consider the reply of October 15, 2001 and any subsequent communications as replies to a non final Office action. The Advisory Action is vacated to the extent it may indicate that prosecution was closed at the time of its mailing.

Telephone inquires related to this decision should be directed to the undersigned at (703) 305-1820.

Brian Hearn

Brian Hearn
Senior Petitions Examiner
Office of Petitions
Office of the Deputy Commissioner
for Patent Examination Policy

UNITED STATES PATENT AND TRADEMARK OFFICE

Commissioner for Patents
United States Patent and Trademark Office
P.O. Box 1450
Alexandria, VA 22313-1450
www.uspto.gov

In re Patent No. 6170118
Issue Date: January 9,2001
Application No. 08953847
Filed: October 15,1997
Attorney Docket No. 4258

:
:DECISION GRANTING PETITION
:UNDER 37 CFR 1.378(c)
:

This is a decision on the electronic petition, filed July 15,2009 ,under 37 CFR 1.378(c) to accept the unintentionally delayed payment of the 7.5 year maintenance fee for the above-identified patent.

The petition is **GRANTED**.

The maintenance fee is accepted, and the above-identified patent reinstated as of July 15,2009 .
This decision also constitutes notice that the fee has been accepted. An electronic copy of the petition and this decision has been created as an entry in the Image File Wrapper. Nevertheless, petitioner should print and retain an independent copy.

Telephone inquiries related to this electronic decision should be directed to the Electronic Business Center at 1-866-217-9197.

PTO/SB/66 (03-09)
Approved for use through 03/31/2012. OMB 0651-0016
U.S. Patent and Trademark Office: U.S. DEPARTMENT OF COMMERCE
Under the Paperwork Reduction Act of 1995, no persons are required to respond to a collection of information unless it displays valid OMB control number.

PETITION TO ACCEPT UNINTENTIONALLY DELAYED PAYMENT OF MAINTENANCE FEE IN AN EXPIRED PATENT (37 CFR 1.378(c))

Patent Number	Issue Date (YYYY-MM-DD)	Application Number	Filing Date (YYYY-MM-DD)	Docket Number (if applicable)
6170118	2001-01-09	08953847	1997-10-15	4258

CAUTION: Maintenance fee (and surcharge, if any) payment must correctly identify: (1) the patent number and (2) the application number of the actual U.S. application leading to issuance of that patent to ensure the fee(s) is/are associated with the correct patent. 37 CFR 1.366(c) and (d).

SMALL ENTITY
☒ Patentee claims, or has previously claimed, small entity status. See 37 CFR 1.27.

LOSS OF ENTITLEMENT TO SMALL ENTITY STATUS
☐ Patentee is no longer entitled to small entity status. See 37 CFR 1.27(g)

NOT Small Entity		Small Entity	
Fee	Code	Fee	Code
○ 3 ½ year	(1551)	○ 3 ½ year	(2551)
○ 7 ½ year	(1552)	◉ 7 ½ year	(2552)
○ 11 ½ year	(1553)	○ 11 ½ year	(2553)

SURCHARGE
The surcharge required by 37 CFR 1.20(i)(2) (Fee Code 1558) must be paid as a condition of accepting unintentionally delayed payment of the maintenance fee.

MAINTENANCE FEE (37 CFR 1.20(e)-(g))
The appropriate maintenance fee must be submitted with this petition.

STATEMENT
THE UNDERSIGNED CERTIFIES THAT THE DELAY IN PAYMENT OF THE MAINTENANCE FEE TO THIS PATENT WAS UNINTENTIONAL

PETITIONER(S) REQUEST THAT THE DELAYED PAYMENT OF THE MAINTENANCE FEE BE ACCEPTED AND THE PATENT REINSTATED

THIS PORTION MUST BE COMPLETED BY THE SIGNATORY OR SIGNATORIES

37 CFR 1.378(d) states: "Any petition under this section must be signed by an attorney or agent registered to practice before the Patent and Trademark Office, or by the patentee, the assignee, or other party in interest."

I certify, in accordance with 37 CFR 1.4(d)(4) that I am

◉ An attorney or agent registered to practice before the Patent and Trademark Office

○ A sole patentee

○ A joint patentee; I certify that I am authorized to sign this submission on behalf of all the other patentees.

○ A joint patentee; all of whom are signing this e-petition

○ The assignee of record of the entire interest

Patent Practitioner			
A signature of the applicant or representative is required in accordance with 37 CFR 1.33 and 10.18. Please see 37 CFR 1.4(d) for the form of the signature			
Signature	/Christopher L. Bernard/	Date (YYYY-MM-DD)	2009-07-15
Name	Christopher L. Bernard	Registration Number	48234

This collection of information is required by 37 CFR 1.378(c). The information is required to obtain or retain a benefit by the public which is to file (and by the USPTO to process) an application. Confidentiality is governed by 35 U.S.C. 122 and 37 CFR 1.11 and 1.14. This collection is estimated to take 1 hour to complete, including gathering, preparing, and submitting the completed application form to the USPTO. Time will vary depending upon the individual case. Any comments on the amount of time you require to complete this form and/ or suggestions for reducing this burden, should be sent to the Chief Information Officer, U.S. Patent and Trademark Office, U.S. Department of Commerce, P.O. Box 1450, Alexandria, VA 22313-1450. DO NOT SEND FEES OR COMPLETED FORMS TO THIS ADDRESS. **This form can only be used when in conjunction with EFS-Web. If this form is mailed to the USPTO, it may cause delays in reinstating the patent.**

Privacy Act Statement

The Privacy Act of 1974 (P.L. 93-579) requires that you be given certain information in connection with your submission of the attached form related to a patent application or patent. Accordingly, pursuant to the requirements of the Act, please be advised that: (1) the general authority for the collection of this information is 35 U.S.C. 2(b)(2); (2) furnishing of the information solicited is voluntary; and (3) the principal purpose for which the information is used by the U.S. Patent and Trademark Office is to process and/or examine your submission related to a patent application or patent. If you do not furnish the requested information, the U.S. Patent and Trademark Office may not be able to process and/or examine your submission, which may result in termination of proceedings or abandonment of the application or expiration of the patent.

The information provided by you in this form will be subject to the following routine uses:

1. The information on this form will be treated confidentially to the extent allowed under the Freedom of Information Act (5 U.S.C. 552) and the Privacy Act (5 U.S.C. 552a). Records from this system of records may be disclosed to the Department of Justice to determine whether the Freedom of Information Act requires disclosure of these records.

2. A record from this system of records may be disclosed, as a routine use, in the course of presenting evidence to a court, magistrate, or administrative tribunal, including disclosures to opposing counsel in the course of settlement negotiations.

3. A record in this system of records may be disclosed, as a routine use, to a Member of Congress submitting a request involving an individual, to whom the record pertains, when the individual has requested assistance from the Member with respect to the subject matter of the record.

4. A record in this system of records may be disclosed, as a routine use, to a contractor of the Agency having need for the information in order to perform a contract. Recipients of information shall be required to comply with the requirements of the Privacy Act of 1974, as amended, pursuant to 5 U.S.C. 552a(m).

5. A record related to an International Application filed under the Patent Cooperation Treaty in this system of records may be disclosed, as a routine use, to the International Bureau of the World Intellectual Property Organization, pursuant to the Patent Cooperation Treaty.

6. A record in this system of records may be disclosed, as a routine use, to another federal agency for purposes of National Security review (35 U.S.C. 181) and for review pursuant to the Atomic Energy Act (42 U.S.C. 218(c)).

7. A record from this system of records may be disclosed, as a routine use, to the Administrator, General Services, or his/her designee, during an inspection of records conducted by GSA as part of that agency's responsibility to recommend improvements in records management practices and programs, under authority of 44 U.S.C. 2904 and 2906. Such disclosure shall be made in accordance with the GSA regulations governing inspection of records for this purpose, and any other relevant (i.e., GSA or Commerce) directive. Such disclosure shall not be used to make determinations about individuals.

8. A record from this system of records may be disclosed, as a routine use, to the public after either publication of the application pursuant to 35 U.S.C. 122(b) or issuance of a patent pursuant to 35 U.S.C. 151. Further, a record may be disclosed, subject to the limitations of 37 CFR 1.14, as a routine use, to the public if the record was filed in an application which became abandoned or in which the proceedings were terminated and which application is referenced by either a published application, an application open to public inspections or an issued patent.

9. A record from this system of records may be disclosed, as a routine use, to a Federal, State, or local law enforcement agency, if the USPTO becomes aware of a violation or potential violation of law or regulation.

Approved for use through 04/30/2009. OMB 0651-0016
U.S. Patent and Trademark Office: U.S. DEPARTMENT OF COMMERCE
Under the Paperwork Reduction Act of 1995, no persons are required to respond to a collection of information unless it displays valid OMB control number.

PETITION TO ACCEPT UNINTENTIONALLY DELAYED PAYMENT OF MAINTENANCE FEE IN AN EXPIRED PATENT (37 CFR 1.378(c))

Patent Number	Issue Date (YYYY-MM-DD)	Application Number	Filing Date (YYYY-MM-DD)	Docket Number (if applicable)
6,112,772	2000-09-05	08/954,035	1997-10-20	T0678.0000/P046

CAUTION: Maintenance fee (and surcharge, if any) payment must correctly identify: (1) the patent number and (2) the application number of the actual U.S. application leading to issuance of that patent to ensure the fee(s) is/are associated with the correct patent. 37 CFR 1.366(c) and (d).

SMALL ENTITY
☐ Patentee claims, or has previously claimed, small entity status. See 37 CFR 1.27.

LOSS OF ENTITLEMENT TO SMALL ENTITY STATUS
☐ Patentee is no longer entitled to small entity status. See 37 CFR 1.27(g)

NOT Small Entity		Small Entity	
Fee	Code	Fee	Code
○ 3 ½ year	(1551)	○ 3 ½ year	(2551)
◉ 7 ½ year	(1552)	○ 7 ½ year	(2552)
○ 11 ½ year	(1553)	○ 11 ½ year	(2553)

SURCHARGE
The surcharge required by 37 CFR 1.20(i)(2) (Fee Code 1558) must be paid as a condition of accepting unintentionally delayed payment of the maintenance fee.

MAINTENANCE FEE (37 CFR 1.20(e)-(g))
The appropriate maintenance fee must be submitted with this petition.

STATEMENT
THE UNDERSIGNED CERTIFIES THAT THE DELAY IN PAYMENT OF THE MAINTENANCE FEE TO THIS PATENT WAS UNINTENTIONAL

PETITIONER(S) REQUEST THAT THE DELAYED PAYMENT OF THE MAINTENANCE FEE BE ACCEPTED AND THE PATENT REINSTATED

THIS PORTION MUST BE COMPLETED BY THE SIGNATORY OR SIGNATORIES

37 CFR 1.378(d) states: "Any petition under this section must be signed by an attorney or agent registered to practice before the Patent and Trademark Office, or by the patentee, the assignee, or other party in interest."

I certify, in accordance with 37 CFR 1.4(d)(4) that I am

◉ An attorney or agent registered to practice before the Patent and Trademark Office

○ A sole patentee

○ A joint patentee; I certify that I am authorized to sign this submission on behalf of all the other patentees.

○ A joint patentee; all of whom are signing this e-petition

○ The assignee of record of the entire interest

Patent Practitioner			
A signature of the applicant or representative is required in accordance with 37 CFR 1.33 and 10.18. Please see 37 CFR 1.4(d) for the form of the signature			
Signature	/PGH/	Date (YYYY-MM-DD)	2008-11-13
Name	Philip G. Hampton, II	Registration Number	30642

This collection of information is required by 37 CFR 1.378(c). The information is required to obtain or retain a benefit by the public which is to file (and by the USPTO to process) an application. Confidentiality is governed by 35 U.S.C. 122 and 37 CFR 1.11 and 1.14. This collection is estimated to take 1 hour to complete, including gathering, preparing, and submitting the completed application form to the USPTO. Time will vary depending upon the individual case. Any comments on the amount of time you require to complete this form and/ or suggestions for reducing this burden, should be sent to the Chief Information Officer, U.S. Patent and Trademark Office, U.S. Department of Commerce, P.O. Box 1450, Alexandria, VA 22313-1450. DO NOT SEND FEES OR COMPLETED FORMS TO THIS ADDRESS. **This form can only be used when in conjunction with EFS-Web. If this form is mailed to the USPTO, it may cause delays in reinstating the patent.**

Privacy Act Statement

The Privacy Act of 1974 (P.L. 93-579) requires that you be given certain information in connection with your submission of the attached form related to a patent application or patent. Accordingly, pursuant to the requirements of the Act, please be advised that: (1) the general authority for the collection of this information is 35 U.S.C. 2(b)(2); (2) furnishing of the information solicited is voluntary; and (3) the principal purpose for which the information is used by the U.S. Patent and Trademark Office is to process and/or examine your submission related to a patent application or patent. If you do not furnish the requested information, the U.S. Patent and Trademark Office may not be able to process and/or examine your submission, which may result in termination of proceedings or abandonment of the application or expiration of the patent.

The information provided by you in this form will be subject to the following routine uses:

1. The information on this form will be treated confidentially to the extent allowed under the Freedom of Information Act (5 U.S.C. 552) and the Privacy Act (5 U.S.C. 552a). Records from this system of records may be disclosed to the Department of Justice to determine whether the Freedom of Information Act requires disclosure of these record s.

2. A record from this system of records may be disclosed, as a routine use, in the course of presenting evidence to a court, magistrate, or administrative tribunal, including disclosures to opposing counsel in the course of settlement negotiations.

3. A record in this system of records may be disclosed, as a routine use, to a Member of Congress submitting a request involving an individual, to whom the record pertains, when the individual has requested assistance from the Member with respect to the subject matter of the record.

4. A record in this system of records may be disclosed, as a routine use, to a contractor of the Agency having need for the information in order to perform a contract. Recipients of information shall be required to comply with the requirements of the Privacy Act of 1974, as amended, pursuant to 5 U.S.C. 552a(m).

5. A record related to an International Application filed under the Patent Cooperation Treaty in this system of records may be disclosed, as a routine use, to the International Bureau of the World Intellectual Property Organization, pursuant to the Patent Cooperation Treaty.

6. A record in this system of records may be disclosed, as a routine use, to another federal agency for purposes of National Security review (35 U.S.C. 181) and for review pursuant to the Atomic Energy Act (42 U.S.C. 218(c)).

7. A record from this system of records may be disclosed, as a routine use, to the Administrator, General Services, or his/her designee, during an inspection of records conducted by GSA as part of that agency's responsibility to recommend improvements in records management practices and programs, under authority of 44 U.S.C. 2904 and 2906. Such disclosure shall be made in accordance with the GSA regulations governing inspection of records for this purpose, and any other relevant (i.e., GSA or Commerce) directive. Such disclosure shall not be used to make determinations about individuals.

8. A record from this system of records may be disclosed, as a routine use, to the public after either publication of the application pursuant to 35 U.S.C. 122(b) or issuance of a patent pursuant to 35 U.S.C. 151. Further, a record may be disclosed, subject to the limitations of 37 CFR 1.14, as a routine use, to the public if the record was filed in an application which became abandoned or in which the proceedings were terminated and which application is referenced by either a published application, an application open to public inspections or an issued patent.

9. A record from this system of records may be disclosed, as a routine use, to a Federal, State, or local law enforcement agency, if the USPTO becomes aware of a violation or potential violation of law or regulation.

UNITED STATES PATENT AND TRADEMARK OFFICE

Commissioner for Patents
United States Patent and Trademark Office
P.O. Box 1450
Alexandria, VA 22313-1450
www.uspto.gov

In re Patent No. 6112772
Issue Date: September 5,2000
Application No. 08954035
Filed: October 20,1997
Attorney Docket No. L6625.001/P0

:
:DECISION GRANTING PETITION
:UNDER 37 CFR 1.378(c)
:

This is a decision on the electronic petition, filed November 13,2008 ,under 37 CFR 1.378(c) to accept the unintentionally delayed payment of the 7.5 year maintenance fee for the above-identified patent.

The petition is **GRANTED**.

The maintenance fee is accepted, and the above-identified patent reinstated as of November 13,2008 . This decision also constitutes notice that the fee has been accepted. An electronic copy of the petition and this decision has been created as an entry in the Image File Wrapper. Nevertheless, petitioner should print and retain an independent copy.

Telephone inquiries related to this electronic decision should be directed to the Electronic Business Center at 1-866-217-9197.

UNITED STATES DEPARTMENT OF COMMERCE
Patent and Trademark Office
ASSISTANT SECRETARY AND COMMISSIONER OF PATENTS AND TRADEMARKS
Washington, D.C. 20231

#7

COPY MAILED

APR 03 2000

SPECIAL PROGRAMS OFFICE
DAC FOR PATENTS

Richard A. Rezek
Barnes and Thornburg
1313 Merchants Bank Building
11 S Meridian Street
Indianapolis, IN 46204

In re Application of
Curtis L. Taylor
Application No.08/954,291
Filed: October 17, 1997
Attorney Docket No. 3053-28781

DECISION GRANTING PETITION

This is a decision on the Petition To Correct Filing Date Under 37 CFR 1.10, filed March 28, 2000, by facsimile transmission, requesting that the above-identified application be accorded a filing date of October 17, 1997, instead of the presently accorded date of October 20, 1997.

Receipt is acknowledged of an information disclosure statement filed October 20, 1997 and a foreign priority document filed December 15, 1998.

Petitioners filed a reissue application for U.S. Patent No. 5,458,483, issued October 17, 1995. The reissue application and an information disclosure statement were received in the U. S. Patent and Trademark Office on October 20, 1997.

On February 4, 1998, a Notice to File Missing Parts of Application, Filing Date Granted for missing declaration and signatures was mailed to the applicant.

On February 17, 1998, a Request for Corrected Filing Receipt was filed.

On August 7, 1998, a declaration with signatures and a preliminary amendment were received.

On March 28, 2000, the present petition, including an authorization to charge counsel's deposit account, was filed. Petitioners argue that the application was filed on October 17, 1997, not October 20, 1997.

In support thereof, petitioners provided a copy of the Express Mail label, receipt no. EM343389952US, showing a Date-In of October 17, 2000. The same Express Mail receipt number was referred to in the transmittal letter (submitted with the original Application) with a USPTO mail room label of October 17, 1997. Petitioners request that the application be accorded a filing date of October 17, 1997.

The Office considers the date the paper or fee is shown to have been deposited as "Express Mail" to be the "Date In" on the Express Mail label, MPEP 513. That is the date that verifies that the package was actually mailed. In view of the above, the evidence is convincing that the application was deposited as "Express Mail" with the US Postal Service on October 17, 1997.

In view of the above, the petition is granted.

No petition fee is due.

The preliminary amendment filed August 7, 1998, will be entered in due course and must be considered by the examiner for entry of new matter not described in the application as filed. 35 USC 112, first paragraph; 35 USC 132.

The application is being forwarded to Office of Initial Patent Examination for the correction of the application filing date to **October 17, 1997**.

Thereafter, the application will be forwarded to Technology Center 3743 for examination in due course of the reissue application.

Telephone inquiries concerning this matter should be directed to Anton Fetting of the Special Program Law Office at 703-305-9285.

Fred A. Silverberg
Senior Legal Advisor
Special Program Law Office
Office of the Deputy Assistant Commissioner
for Patent Policy and Projects

awf

Under the Paperwork Reduction Act of 1995, no persons are required to respond to a collection of information unless it displays valid OMB control number.

PETITION TO ACCEPT UNINTENTIONALLY DELAYED PAYMENT OF MAINTENANCE FEE IN AN EXPIRED PATENT (37 CFR 1.378(c))

Patent Number	Issue Date (YYYY-MM-DD)	Application Number	Filing Date (YYYY-MM-DD)	Docket Number (if applicable)
6,000,825	1999-12-14	08/954,560	1997-10-20	20260-00039

CAUTION: Maintenance fee (and surcharge, if any) payment must correctly identify: (1) the patent number and (2) the application number of the actual U.S. application leading to issuance of that patent to ensure the fee(s) is/are associated with the correct patent. 37 CFR 1.366(c) and (d).

SMALL ENTITY
☐ Patentee claims, or has previously claimed, small entity status. See 37 CFR 1.27.

LOSS OF ENTITLEMENT TO SMALL ENTITY STATUS
☒ Patentee is no longer entitled to small entity status. See 37 CFR 1.27(g)

NOT Small Entity		Small Entity	
Fee	Code	Fee	Code
○ 3 ½ year	(1551)	○ 3 ½ year	(2551)
◉ 7 ½ year	(1552)	○ 7 ½ year	(2552)
○ 11 ½ year	(1553)	○ 11 ½ year	(2553)

SURCHARGE
The surcharge required by 37 CFR 1.20(i)(2) (Fee Code 1558) must be paid as a condition of accepting unintentionally delayed payment of the maintenance fee.

MAINTENANCE FEE (37 CFR 1.20(e)-(g))
The appropriate maintenance fee must be submitted with this petition.

STATEMENT
THE UNDERSIGNED CERTIFIES THAT THE DELAY IN PAYMENT OF THE MAINTENANCE FEE TO THIS PATENT WAS UNINTENTIONAL

PETITIONER(S) REQUEST THAT THE DELAYED PAYMENT OF THE MAINTENANCE FEE BE ACCEPTED AND THE PATENT REINSTATED

THIS PORTION MUST BE COMPLETED BY THE SIGNATORY OR SIGNATORIES

37 CFR 1.378(d) states: "Any petition under this section must be signed by an attorney or agent registered to practice before the Patent and Trademark Office, or by the patentee, the assignee, or other party in interest."

I certify, in accordance with 37 CFR 1.4(d)(4) that I am

○ An attorney or agent registered to practice before the Patent and Trademark Office

◉ A sole patentee

○ A joint patentee; I certify that I am authorized to sign this submission on behalf of all the other patentees.

○ A joint patentee; all of whom are signing this e-petition

○ The assignee of record of the entire interest

Sole Patentee			
A signature of the applicant or representative is required in accordance with 37 CFR 1.33 and 10.18. Please see 37 CFR 1.4(d) for the form of the signature.			
Signature	/Lars-Berno Fredriksson/	Date (YYYY-MM-DD)	2008-12-17
Name	Lars-Berno Fredriksson		

This collection of information is required by 37 CFR 1.378(c). The information is required to obtain or retain a benefit by the public which is to file (and by the USPTO to process) an application. Confidentiality is governed by 35 U.S.C. 122 and 37 CFR 1.11 and 1.14. This collection is estimated to take 1 hour to complete, including gathering, preparing, and submitting the completed application form to the USPTO. Time will vary depending upon the individual case. Any comments on the amount of time you require to complete this form and/ or suggestions for reducing this burden, should be sent to the Chief Information Officer, U.S. Patent and Trademark Office, U.S. Department of Commerce, P.O. Box 1450, Alexandria, VA 22313-1450. DO NOT SEND FEES OR COMPLETED FORMS TO THIS ADDRESS. **This form can only be used when in conjunction with EFS-Web. If this form is mailed to the USPTO, it may cause delays in reinstating the patent.**

Privacy Act Statement

The Privacy Act of 1974 (P.L. 93-579) requires that you be given certain information in connection with your submission of the attached form related to a patent application or patent. Accordingly, pursuant to the requirements of the Act, please be advised that: (1) the general authority for the collection of this information is 35 U.S.C. 2(b)(2); (2) furnishing of the information solicited is voluntary; and (3) the principal purpose for which the information is used by the U.S. Patent and Trademark Office is to process and/or examine your submission related to a patent application or patent. If you do not furnish the requested information, the U.S. Patent and Trademark Office may not be able to process and/or examine your submission, which may result in termination of proceedings or abandonment of the application or expiration of the patent.

The information provided by you in this form will be subject to the following routine uses:

1. The information on this form will be treated confidentially to the extent allowed under the Freedom of Information Act (5 U.S.C. 552) and the Privacy Act (5 U.S.C. 552a). Records from this system of records may be disclosed to the Department of Justice to determine whether the Freedom of Information Act requires disclosure of these record s.

2. A record from this system of records may be disclosed, as a routine use, in the course of presenting evidence to a court, magistrate, or administrative tribunal, including disclosures to opposing counsel in the course of settlement negotiations.

3. A record in this system of records may be disclosed, as a routine use, to a Member of Congress submitting a request involving an individual, to whom the record pertains, when the individual has requested assistance from the Member with respect to the subject matter of the record.

4. A record in this system of records may be disclosed, as a routine use, to a contractor of the Agency having need for the information in order to perform a contract. Recipients of information shall be required to comply with the requirements of the Privacy Act of 1974, as amended, pursuant to 5 U.S.C. 552a(m).

5. A record related to an International Application filed under the Patent Cooperation Treaty in this system of records may be disclosed, as a routine use, to the International Bureau of the World Intellectual Property Organization, pursuant to the Patent Cooperation Treaty.

6. A record in this system of records may be disclosed, as a routine use, to another federal agency for purposes of National Security review (35 U.S.C. 181) and for review pursuant to the Atomic Energy Act (42 U.S.C. 218(c)).

7. A record from this system of records may be disclosed, as a routine use, to the Administrator, General Services, or his/her designee, during an inspection of records conducted by GSA as part of that agency's responsibility to recommend improvements in records management practices and programs, under authority of 44 U.S.C. 2904 and 2906. Such disclosure shall be made in accordance with the GSA regulations governing inspection of records for this purpose, and any other relevant (i.e., GSA or Commerce) directive. Such disclosure shall not be used to make determinations about individuals.

8. A record from this system of records may be disclosed, as a routine use, to the public after either publication of the application pursuant to 35 U.S.C. 122(b) or issuance of a patent pursuant to 35 U.S.C. 151. Further, a record may be disclosed, subject to the limitations of 37 CFR 1.14, as a routine use, to the public if the record was filed in an application which became abandoned or in which the proceedings were terminated and which application is referenced by either a published application, an application open to public inspections or an issued patent.

9. A record from this system of records may be disclosed, as a routine use, to a Federal, State, or local law enforcement agency, if the USPTO becomes aware of a violation or potential violation of law or regulation.

UNITED STATES PATENT AND TRADEMARK OFFICE

Commissioner for Patents
United States Patent and Trademark Office
P.O. Box 1450
Alexandria, VA 22313-1450
www.uspto.gov

In re Patent No. 6000825
Issue Date: December 14,1999
Application No. 08954560
Filed: October 20,1997
Attorney Docket No. 0260/00039

:
:DECISION GRANTING PETITION
:UNDER 37 CFR 1.378(c)
:

This is a decision on the electronic petition, filed December 17,2008 ,under 37 CFR 1.378(c) to accept the unintentionally delayed payment of the 7.5 year maintenance fee for the above-identified patent.

The petition is **GRANTED**.

The maintenance fee is accepted, and the above-identified patent reinstated as of December 17,2008 . This decision also constitutes notice that the fee has been accepted. An electronic copy of the petition and this decision has been created as an entry in the Image File Wrapper. Nevertheless, petitioner should print and retain an independent copy.

Telephone inquiries related to this electronic decision should be directed to the Electronic Business Center at 1-866-217-9197.

UNITED STATES PATENT AND TRADEMARK OFFICE

Commissioner for Patents
United States Patent and Trademark Office
P.O. Box 1450
Alexandria, VA 22313-1450
www.uspto.gov

In re Patent No. 6014464
Issue Date: January 11,2000
Application No. 08955403
Filed: October 21,1997
Attorney Docket No. 08342/011001

:
:DECISION GRANTING PETITION
:UNDER 37 CFR 1.378(c)
:

This is a decision on the electronic petition, filed December 5,2008 ,under 37 CFR 1.378(c) to accept the unintentionally delayed payment of the 7.5 year maintenance fee for the above-identified patent.

The petition is **GRANTED**.

The maintenance fee is accepted, and the above-identified patent reinstated as of December 5,2008 . This decision also constitutes notice that the fee has been accepted. An electronic copy of the petition and this decision has been created as an entry in the Image File Wrapper. Nevertheless, petitioner should print and retain an independent copy.

Telephone inquiries related to this electronic decision should be directed to the Electronic Business Center at 1-866-217-9197.

Under the Paperwork Reduction Act of 1995, no persons are required to respond to a collection of information unless it displays valid OMB control number.

PETITION TO ACCEPT UNINTENTIONALLY DELAYED PAYMENT OF MAINTENANCE FEE IN AN EXPIRED PATENT (37 CFR 1.378(c))

Patent Number	Issue Date (YYYY-MM-DD)	Application Number	Filing Date (YYYY-MM-DD)	Docket Number (if applicable)
6,014,464	2000-01-11	08/955,403	1997-10-21	14722-0021001

CAUTION: Maintenance fee (and surcharge, if any) payment must correctly identify: (1) the patent number and (2) the application number of the actual U.S. application leading to issuance of that patent to ensure the fee(s) is/are associated with the correct patent. 37 CFR 1.366(c) and (d).

SMALL ENTITY
☒ Patentee claims, or has previously claimed, small entity status. See 37 CFR 1.27.

LOSS OF ENTITLEMENT TO SMALL ENTITY STATUS
☐ Patentee is no longer entitled to small entity status. See 37 CFR 1.27(g)

NOT Small Entity			Small Entity		
	Fee	Code		Fee	Code
○	3 ½ year	(1551)	○	3 ½ year	(2551)
○	7 ½ year	(1552)	◉	7 ½ year	(2552)
○	11 ½ year	(1553)	○	11 ½ year	(2553)

SURCHARGE
The surcharge required by 37 CFR 1.20(i)(2) (Fee Code 1558) must be paid as a condition of accepting unintentionally delayed payment of the maintenance fee.

MAINTENANCE FEE (37 CFR 1.20(e)-(g))
The appropriate maintenance fee must be submitted with this petition.

STATEMENT
THE UNDERSIGNED CERTIFIES THAT THE DELAY IN PAYMENT OF THE MAINTENANCE FEE TO THIS PATENT WAS UNINTENTIONAL

PETITIONER(S) REQUEST THAT THE DELAYED PAYMENT OF THE MAINTENANCE FEE BE ACCEPTED AND THE PATENT REINSTATED

THIS PORTION MUST BE COMPLETED BY THE SIGNATORY OR SIGNATORIES

37 CFR 1.378(d) states: "Any petition under this section must be signed by an attorney or agent registered to practice before the Patent and Trademark Office, or by the patentee, the assignee, or other party in interest."

I certify, in accordance with 37 CFR 1.4(d)(4) that I am

◉ An attorney or agent registered to practice before the Patent and Trademark Office

○ A sole patentee

○ A joint patentee; I certify that I am authorized to sign this submission on behalf of all the other patentees.

○ A joint patentee; all of whom are signing this e-petition

○ The assignee of record of the entire interest

Patent Practitioner			
A signature of the applicant or representative is required in accordance with 37 CFR 1.33 and 10.18. Please see 37 CFR 1.4(d) for the form of the signature			
Signature	/Denis G. Maloney/	Date (YYYY-MM-DD)	2008-12-04
Name	Denis G. Maloney	Registration Number	29670

This collection of information is required by 37 CFR 1.378(c). The information is required to obtain or retain a benefit by the public which is to file (and by the USPTO to process) an application. Confidentiality is governed by 35 U.S.C. 122 and 37 CFR 1.11 and 1.14. This collection is estimated to take 1 hour to complete, including gathering, preparing, and submitting the completed application form to the USPTO. Time will vary depending upon the individual case. Any comments on the amount of time you require to complete this form and/ or suggestions for reducing this burden, should be sent to the Chief Information Officer, U.S. Patent and Trademark Office, U.S. Department of Commerce, P.O. Box 1450, Alexandria, VA 22313-1450. DO NOT SEND FEES OR COMPLETED FORMS TO THIS ADDRESS. **This form can only be used when in conjunction with EFS-Web. If this form is mailed to the USPTO, it may cause delays in reinstating the patent.**

Privacy Act Statement

The Privacy Act of 1974 (P.L. 93-579) requires that you be given certain information in connection with your submission of the attached form related to a patent application or patent. Accordingly, pursuant to the requirements of the Act, please be advised that: (1) the general authority for the collection of this information is 35 U.S.C. 2(b)(2); (2) furnishing of the information solicited is voluntary; and (3) the principal purpose for which the information is used by the U.S. Patent and Trademark Office is to process and/or examine your submission related to a patent application or patent. If you do not furnish the requested information, the U.S. Patent and Trademark Office may not be able to process and/or examine your submission, which may result in termination of proceedings or abandonment of the application or expiration of the patent.

The information provided by you in this form will be subject to the following routine uses:

1. The information on this form will be treated confidentially to the extent allowed under the Freedom of Information Act (5 U.S.C. 552) and the Privacy Act (5 U.S.C. 552a). Records from this system of records may be disclosed to the Department of Justice to determine whether the Freedom of Information Act requires disclosure of these record s.

2. A record from this system of records may be disclosed, as a routine use, in the course of presenting evidence to a court, magistrate, or administrative tribunal, including disclosures to opposing counsel in the course of settlement negotiations.

3. A record in this system of records may be disclosed, as a routine use, to a Member of Congress submitting a request involving an individual, to whom the record pertains, when the individual has requested assistance from the Member with respect to the subject matter of the record.

4. A record in this system of records may be disclosed, as a routine use, to a contractor of the Agency having need for the information in order to perform a contract. Recipients of information shall be required to comply with the requirements of the Privacy Act of 1974, as amended, pursuant to 5 U.S.C. 552a(m).

5. A record related to an International Application filed under the Patent Cooperation Treaty in this system of records may be disclosed, as a routine use, to the International Bureau of the World Intellectual Property Organization, pursuant to the Patent Cooperation Treaty.

6. A record in this system of records may be disclosed, as a routine use, to another federal agency for purposes of National Security review (35 U.S.C. 181) and for review pursuant to the Atomic Energy Act (42 U.S.C. 218(c)).

7. A record from this system of records may be disclosed, as a routine use, to the Administrator, General Services, or his/her designee, during an inspection of records conducted by GSA as part of that agency's responsibility to recommend improvements in records management practices and programs, under authority of 44 U.S.C. 2904 and 2906. Such disclosure shall be made in accordance with the GSA regulations governing inspection of records for this purpose, and any other relevant (i.e., GSA or Commerce) directive. Such disclosure shall not be used to make determinations about individuals.

8. A record from this system of records may be disclosed, as a routine use, to the public after either publication of the application pursuant to 35 U.S.C. 122(b) or issuance of a patent pursuant to 35 U.S.C. 151. Further, a record may be disclosed, subject to the limitations of 37 CFR 1.14, as a routine use, to the public if the record was filed in an application which became abandoned or in which the proceedings were terminated and which application is referenced by either a published application, an application open to public inspections or an issued patent.

9. A record from this system of records may be disclosed, as a routine use, to a Federal, State, or local law enforcement agency, if the USPTO becomes aware of a violation or potential violation of law or regulation.

UNITED STATES PATENT AND TRADEMARK OFFICE

Commissioner for Patents
United States Patent and Trademark Office
P.O. Box 1450
Alexandria, VA 22313-1450
www.uspto.gov

DOV BOSENFELD
5507 COLLEGE AVENUE, SUITE 2
OAKLAND, CA 94618

COPY MAILED

MAY 0 7 2004

OFFICE OF PETITIONS

In re Application of :
David S. McGrath :
Application No. 08/956,009 :
Filed: March 9, 2004 :
Attorney Docket No. LAKE005

NOTICE

This is a notice regarding your request for acceptance of a fee deficiency submission under 37 CFR 1.28. On September 1, 1998, the Court of Appeals for the Federal Circuit held that 37 CFR 1.28(c) is the sole provision governing the time for correction of the erroneous payment of the issue fee as a small entity. **See DH Technology v. Synergystex International, Inc. 154 F.3d 1333, 47 USPQ2d 1865 (Fed. Cir. Sept. 1, 1998).**

The Office no longer investigates or rejects original or reissue applications under 37 CFR 1.56. **1098 Off. Gaz. Pat. Office 502 (January 3, 1989)**. Therefore, nothing in this Notice is intended to imply that an investigation was done.

Your fee deficiency submission under 37 CFR 1.28 is hereby **ACCEPTED**.

Inquiries related to this communication should be directed to the Office of Petitions Staff at (703) 305-9285.

This file is being forwarded to the Files Repository.

Irvin Dingle
Petitions Examiner
Office of Petitions
Office of the Deputy Commissioner
for Patent Examination Policy

Under the Paperwork Reduction Act of 1995, no persons are required to respond to a collection of information unless it displays valid OMB control number.

PETITION TO ACCEPT UNINTENTIONALLY DELAYED PAYMENT OF MAINTENANCE FEE IN AN EXPIRED PATENT (37 CFR 1.378(c))

Patent Number	Issue Date (YYYY-MM-DD)	Application Number	Filing Date (YYYY-MM-DD)	Docket Number (if applicable)
5979635	1999-11-09	08956146	1997-10-22	

CAUTION: Maintenance fee (and surcharge, if any) payment must correctly identify: (1) the patent number and (2) the application number of the actual U.S. application leading to issuance of that patent to ensure the fee(s) is/are associated with the correct patent. 37 CFR 1.366(c) and (d).

SMALL ENTITY
☒ Patentee claims, or has previously claimed, small entity status. See 37 CFR 1.27.

LOSS OF ENTITLEMENT TO SMALL ENTITY STATUS
☐ Patentee is no longer entitled to small entity status. See 37 CFR 1.27(g)

NOT Small Entity		Small Entity	
Fee	Code	Fee	Code
○ 3 ½ year	(1551)	○ 3 ½ year	(2551)
○ 7 ½ year	(1552)	◉ 7 ½ year	(2552)
○ 11 ½ year	(1553)	○ 11 ½ year	(2553)

SURCHARGE
The surcharge required by 37 CFR 1.20(i)(2) (Fee Code 1558) must be paid as a condition of accepting unintentionally delayed payment of the maintenance fee.

MAINTENANCE FEE (37 CFR 1.20(e)-(g))
The appropriate maintenance fee must be submitted with this petition.

STATEMENT
THE UNDERSIGNED CERTIFIES THAT THE DELAY IN PAYMENT OF THE MAINTENANCE FEE TO THIS PATENT WAS UNINTENTIONAL

PETITIONER(S) REQUEST THAT THE DELAYED PAYMENT OF THE MAINTENANCE FEE BE ACCEPTED AND THE PATENT REINSTATED

THIS PORTION MUST BE COMPLETED BY THE SIGNATORY OR SIGNATORIES

37 CFR 1.378(d) states: "Any petition under this section must be signed by an attorney or agent registered to practice before the Patent and Trademark Office, or by the patentee, the assignee, or other party in interest."

I certify, in accordance with 37 CFR 1.4(d)(4) that I am

○ An attorney or agent registered to practice before the Patent and Trademark Office

◉ A sole patentee

○ A joint patentee; I certify that I am authorized to sign this submission on behalf of all the other patentees.

○ A joint patentee; all of whom are signing this e-petition

○ The assignee of record of the entire interest

Sole Patentee			
A signature of the applicant or representative is required in accordance with 37 CFR 1.33 and 10.18. Please see 37 CFR 1.4(d) for the form of the signature.			
Signature	/STEVE CALHOUN/	Date (YYYY-MM-DD)	2008-12-10
Name	STEVE CALHOUN, C/O INDUSTRIAL DYNAMICS CO., LTD.		

This collection of information is required by 37 CFR 1.378(c). The information is required to obtain or retain a benefit by the public which is to file (and by the USPTO to process) an application. Confidentiality is governed by 35 U.S.C. 122 and 37 CFR 1.11 and 1.14. This collection is estimated to take 1 hour to complete, including gathering, preparing, and submitting the completed application form to the USPTO. Time will vary depending upon the individual case. Any comments on the amount of time you require to complete this form and/ or suggestions for reducing this burden, should be sent to the Chief Information Officer, U.S. Patent and Trademark Office, U.S. Department of Commerce, P.O. Box 1450, Alexandria, VA 22313-1450. DO NOT SEND FEES OR COMPLETED FORMS TO THIS ADDRESS. **This form can only be used when in conjunction with EFS-Web. If this form is mailed to the USPTO, it may cause delays in reinstating the patent.**

Privacy Act Statement

The Privacy Act of 1974 (P.L. 93-579) requires that you be given certain information in connection with your submission of the attached form related to a patent application or patent. Accordingly, pursuant to the requirements of the Act, please be advised that: (1) the general authority for the collection of this information is 35 U.S.C. 2(b)(2); (2) furnishing of the information solicited is voluntary; and (3) the principal purpose for which the information is used by the U.S. Patent and Trademark Office is to process and/or examine your submission related to a patent application or patent. If you do not furnish the requested information, the U.S. Patent and Trademark Office may not be able to process and/or examine your submission, which may result in termination of proceedings or abandonment of the application or expiration of the patent.

The information provided by you in this form will be subject to the following routine uses:

1. The information on this form will be treated confidentially to the extent allowed under the Freedom of Information Act (5 U.S.C. 552) and the Privacy Act (5 U.S.C. 552a). Records from this system of records may be disclosed to the Department of Justice to determine whether the Freedom of Information Act requires disclosure of these record s.

2. A record from this system of records may be disclosed, as a routine use, in the course of presenting evidence to a court, magistrate, or administrative tribunal, including disclosures to opposing counsel in the course of settlement negotiations.

3. A record in this system of records may be disclosed, as a routine use, to a Member of Congress submitting a request involving an individual, to whom the record pertains, when the individual has requested assistance from the Member with respect to the subject matter of the record.

4. A record in this system of records may be disclosed, as a routine use, to a contractor of the Agency having need for the information in order to perform a contract. Recipients of information shall be required to comply with the requirements of the Privacy Act of 1974, as amended, pursuant to 5 U.S.C. 552a(m).

5. A record related to an International Application filed under the Patent Cooperation Treaty in this system of records may be disclosed, as a routine use, to the International Bureau of the World Intellectual Property Organization, pursuant to the Patent Cooperation Treaty.

6. A record in this system of records may be disclosed, as a routine use, to another federal agency for purposes of National Security review (35 U.S.C. 181) and for review pursuant to the Atomic Energy Act (42 U.S.C. 218(c)).

7. A record from this system of records may be disclosed, as a routine use, to the Administrator, General Services, or his/her designee, during an inspection of records conducted by GSA as part of that agency's responsibility to recommend improvements in records management practices and programs, under authority of 44 U.S.C. 2904 and 2906. Such disclosure shall be made in accordance with the GSA regulations governing inspection of records for this purpose, and any other relevant (i.e., GSA or Commerce) directive. Such disclosure shall not be used to make determinations about individuals.

8. A record from this system of records may be disclosed, as a routine use, to the public after either publication of the application pursuant to 35 U.S.C. 122(b) or issuance of a patent pursuant to 35 U.S.C. 151. Further, a record may be disclosed, subject to the limitations of 37 CFR 1.14, as a routine use, to the public if the record was filed in an application which became abandoned or in which the proceedings were terminated and which application is referenced by either a published application, an application open to public inspections or an issued patent.

9. A record from this system of records may be disclosed, as a routine use, to a Federal, State, or local law enforcement agency, if the USPTO becomes aware of a violation or potential violation of law or regulation.

UNITED STATES PATENT AND TRADEMARK OFFICE

Commissioner for Patents
United States Patent and Trademark Office
P.O. Box 1450
Alexandria, VA 22313-1450
www.uspto.gov

In re Patent No. 5979635
Issue Date: November 9,1999
Application No. 08956146
Filed: October 22,1997
Attorney Docket No. 042217P003

:

:DECISION GRANTING PETITION
:UNDER 37 CFR 1.378(c)

:

This is a decision on the electronic petition, filed December 10,2008 ,under 37 CFR 1.378(c) to accept the unintentionally delayed payment of the 7.5 year maintenance fee for the above-identified patent.

The petition is **GRANTED**.

The maintenance fee is accepted, and the above-identified patent reinstated as of December 10,2008 . This decision also constitutes notice that the fee has been accepted. An electronic copy of the petition and this decision has been created as an entry in the Image File Wrapper. Nevertheless, petitioner should print and retain an independent copy.

Telephone inquiries related to this electronic decision should be directed to the Electronic Business Center at 1-866-217-9197.

UNITED STATES PATENT AND TRADEMARK OFFICE

Commissioner for Patents
United States Patent and Trademark Office
P.O. Box 1450
Alexandria, VA 22313-1450
www.uspto.gov

In re Patent No. 6041656
Issue Date: March 28,2000
Application No. 08956804
Filed: October 23,1997
Attorney Docket No. DUNGN.004DV2

:
:DECISION GRANTING PETITION
:UNDER 37 CFR 1.378(c)
:

This is a decision on the electronic petition, filed March 24,2010 ,under 37 CFR 1.378(c) to accept the unintentionally delayed payment of the 7.5 year maintenance fee for the above-identified patent.

The petition is **GRANTED**.

The maintenance fee is accepted, and the above-identified patent reinstated as of March 24,2010 . This decision also constitutes notice that the fee has been accepted. An electronic copy of the petition and this decision has been created as an entry in the Image File Wrapper. Nevertheless, petitioner should print and retain an independent copy.

Telephone inquiries related to this electronic decision should be directed to the Electronic Business Center at 1-866-217-9197.

PTO/SB/66 (03-09)
Approved for use through 03/31/2012. OMB 0651-0016
U.S. Patent and Trademark Office: U.S. DEPARTMENT OF COMMERCE
Under the Paperwork Reduction Act of 1995, no persons are required to respond to a collection of information unless it displays valid OMB control number.

PETITION TO ACCEPT UNINTENTIONALLY DELAYED PAYMENT OF MAINTENANCE FEE IN AN EXPIRED PATENT (37 CFR 1.378(c))

Patent Number	Issue Date (YYYY-MM-DD)	Application Number	Filing Date (YYYY-MM-DD)	Docket Number (if applicable)
6041656	2000-03-28	08956804	1997-10-23	

CAUTION: Maintenance fee (and surcharge, if any) payment must correctly identify: (1) the patent number and (2) the application number of the actual U.S. application leading to issuance of that patent to ensure the fee(s) is/are associated with the correct patent. 37 CFR 1.366(c) and (d).

SMALL ENTITY
☒ Patentee claims, or has previously claimed, small entity status. See 37 CFR 1.27.

LOSS OF ENTITLEMENT TO SMALL ENTITY STATUS
☐ Patentee is no longer entitled to small entity status. See 37 CFR 1.27(g)

NOT Small Entity		Small Entity	
Fee	Code	Fee	Code
○ 3 ½ year	(1551)	○ 3 ½ year	(2551)
○ 7 ½ year	(1552)	◉ 7 ½ year	(2552)
○ 11 ½ year	(1553)	○ 11 ½ year	(2553)

SURCHARGE
The surcharge required by 37 CFR 1.20(i)(2) (Fee Code 1558) must be paid as a condition of accepting unintentionally delayed payment of the maintenance fee.

MAINTENANCE FEE (37 CFR 1.20(e)-(g))
The appropriate maintenance fee must be submitted with this petition.

STATEMENT
THE UNDERSIGNED CERTIFIES THAT THE DELAY IN PAYMENT OF THE MAINTENANCE FEE TO THIS PATENT WAS UNINTENTIONAL

PETITIONER(S) REQUEST THAT THE DELAYED PAYMENT OF THE MAINTENANCE FEE BE ACCEPTED AND THE PATENT REINSTATED

THIS PORTION MUST BE COMPLETED BY THE SIGNATORY OR SIGNATORIES

37 CFR 1.378(d) states: "Any petition under this section must be signed by an attorney or agent registered to practice before the Patent and Trademark Office, or by the patentee, the assignee, or other party in interest."

I certify, in accordance with 37 CFR 1.4(d)(4) that I am

◉ An attorney or agent registered to practice before the Patent and Trademark Office

○ A sole patentee

○ A joint patentee; I certify that I am authorized to sign this submission on behalf of all the other patentees.

○ A joint patentee; all of whom are signing this e-petition

○ The assignee of record of the entire interest

Patent Practitioner			
A signature of the applicant or representative is required in accordance with 37 CFR 1.33 and 10.18. Please see 37 CFR 1.4(d) for the form of the signature			
Signature	/Angela H. Smith/	Date (YYYY-MM-DD)	2010-03-24
Name	Angela H. Smith	Registration Number	53606

This collection of information is required by 37 CFR 1.378(c). The information is required to obtain or retain a benefit by the public which is to file (and by the USPTO to process) an application. Confidentiality is governed by 35 U.S.C. 122 and 37 CFR 1.11 and 1.14. This collection is estimated to take 1 hour to complete, including gathering, preparing, and submitting the completed application form to the USPTO. Time will vary depending upon the individual case. Any comments on the amount of time you require to complete this form and/ or suggestions for reducing this burden, should be sent to the Chief Information Officer, U.S. Patent and Trademark Office, U.S. Department of Commerce, P.O. Box 1450, Alexandria, VA 22313-1450. DO NOT SEND FEES OR COMPLETED FORMS TO THIS ADDRESS. **This form can only be used when in conjunction with EFS-Web. If this form is mailed to the USPTO, it may cause delays in reinstating the patent.**

Privacy Act Statement

The Privacy Act of 1974 (P.L. 93-579) requires that you be given certain information in connection with your submission of the attached form related to a patent application or patent. Accordingly, pursuant to the requirements of the Act, please be advised that: (1) the general authority for the collection of this information is 35 U.S.C. 2(b)(2); (2) furnishing of the information solicited is voluntary; and (3) the principal purpose for which the information is used by the U.S. Patent and Trademark Office is to process and/or examine your submission related to a patent application or patent. If you do not furnish the requested information, the U.S. Patent and Trademark Office may not be able to process and/or examine your submission, which may result in termination of proceedings or abandonment of the application or expiration of the patent.

The information provided by you in this form will be subject to the following routine uses:

1. The information on this form will be treated confidentially to the extent allowed under the Freedom of Information Act (5 U.S.C. 552) and the Privacy Act (5 U.S.C. 552a). Records from this system of records may be disclosed to the Department of Justice to determine whether the Freedom of Information Act requires disclosure of these records.

2. A record from this system of records may be disclosed, as a routine use, in the course of presenting evidence to a court, magistrate, or administrative tribunal, including disclosures to opposing counsel in the course of settlement negotiations.

3. A record in this system of records may be disclosed, as a routine use, to a Member of Congress submitting a request involving an individual, to whom the record pertains, when the individual has requested assistance from the Member with respect to the subject matter of the record.

4. A record in this system of records may be disclosed, as a routine use, to a contractor of the Agency having need for the information in order to perform a contract. Recipients of information shall be required to comply with the requirements of the Privacy Act of 1974, as amended, pursuant to 5 U.S.C. 552a(m).

5. A record related to an International Application filed under the Patent Cooperation Treaty in this system of records may be disclosed, as a routine use, to the International Bureau of the World Intellectual Property Organization, pursuant to the Patent Cooperation Treaty.

6. A record in this system of records may be disclosed, as a routine use, to another federal agency for purposes of National Security review (35 U.S.C. 181) and for review pursuant to the Atomic Energy Act (42 U.S.C. 218(c)).

7. A record from this system of records may be disclosed, as a routine use, to the Administrator, General Services, or his/her designee, during an inspection of records conducted by GSA as part of that agency's responsibility to recommend improvements in records management practices and programs, under authority of 44 U.S.C. 2904 and 2906. Such disclosure shall be made in accordance with the GSA regulations governing inspection of records for this purpose, and any other relevant (i.e., GSA or Commerce) directive. Such disclosure shall not be used to make determinations about individuals.

8. A record from this system of records may be disclosed, as a routine use, to the public after either publication of the application pursuant to 35 U.S.C. 122(b) or issuance of a patent pursuant to 35 U.S.C. 151. Further, a record may be disclosed, subject to the limitations of 37 CFR 1.14, as a routine use, to the public if the record was filed in an application which became abandoned or in which the proceedings were terminated and which application is referenced by either a published application, an application open to public inspections or an issued patent.

9. A record from this system of records may be disclosed, as a routine use, to a Federal, State, or local law enforcement agency, if the USPTO becomes aware of a violation or potential violation of law or regulation.

UNITED STATES PATENT AND TRADEMARK OFFICE

Commissioner for Patents
United States Patent and Trademark Office
P.O. Box 1450
Alexandria, VA 22313-1450
www.uspto.gov

Mailed: 4/21/05

rld
Paper Number _____

In re application of
Beer et al.
Serial No. 08/957,187
Filed: October 24, 1997
For: MONO-ORMULTILAYER FILM

DECISION ON PETITION

This is a response to the PETITION TO WITHDRAW HOLDING OF ABANDONMENT UNDER 37 CFR 1.181(a), filed August 23, 2004. The petition requests that the abandonment, as set forth in the Notice of Abandonment mailed on August 11, 2004, for failure to timely file a proper reply to the Office letter mailed January 21, 2004 be withdrawn since applicants did timely file a reply February 18, 2004, 2003 as indicated in applicant's Certificate of Mailing. The Return Post Card indicating that the response was sent first class mail on February 18, 2004, and stamped as received by the USPTO on April 23, 2004 as submitted by applicant indicates that the Office received an Amendment, having a Certificate of Mailing pursuant to 37 CFR 1.8, filed in a timely manner and dated February 18, 2004.

DECISION

The instant request has been accepted as a petition to withdraw the holding of abandonment under the provisions of 37 CFR 1.181 (no fee) - no abandonment-in-fact. A review of the evidence presented reveals that applicant's reply was properly filed on February 18, 2004 as evidenced by the Certificate of Mailing. Accordingly, any holding of abandonment for failure to timely file a proper reply to the Office letter mailed January 21, 2004 is hereby vacated, and the application is returned to pending status.

The application shall be forwarded to the examiner for entry, processing and consideration of the reply originally filed on February 18, 2004 as indicated in the Certificate of Mailing.

The Petition is **GRANTED**.

JStone

Jacqueline Stone, Director
Technology Center 1700
Chemical and Materials Engineering

Samuel H. Megerditchian
745 Fifth Avenue
New York, NY 10151

UNITED STATES PATENT AND TRADEMARK OFFICE

COMMISSIONER FOR PATENTS
UNITED STATES PATENT AND TRADEMARK OFFICE
P.O. BOX 1450
ALEXANDRIA, VA 22313-1450
www.uspto.gov

I.C. WADDEY, JR.
WADDEY & PATTERSON
A PROFESSIONAL CORPORATION
414 UNION STREET, STE. 2020
NATIONS BANK PLAZA
NASHVILLE, TN 37219

COPY MAILED

MAY 11 2005

OFFICE OF PETITIONS

In re Application of	:	
James A. Williams	:	
Application No. 08/957,494	:	
Filed: October 24, 1997	:	ON PETITION
Attorney Docket No.: 3843	:	

This is a decision on the petition under 37 CFR 1.137(a), or in the alternative under 37 CFR 1.137(b), filed October 28, 2004, to revive the above-identified application.

The petition under 37 CFR 1.137(a) is **granted**.

The above-identified application became abandoned for failure to timely reply to the Notice of Allowability (hereinafter "Notice"), mailed May 25, 1999. The Notice set a non-extendable three (3) month period for reply. No reply having been received, the above-identified application became abandoned August 26, 1999. A Notice of Abandonment was mailed on May 11, 2000.

With the instant petition, Applicant has submitted drawings in reply to the Notice. The issue fee has been previously submitted on August 18, 1999.

In view of the above, the petition under 37 CFR 1.137(b) is **dismissed as moot**.

The application is being forwarded to Publications Division for processing into a patent in due course.

Telephone inquiries should be directed to the undersigned at (703) 305-0014.

Derek L. Woods
Petitions Attorney
Office of Petitions

UNITED STATES PATENT AND TRADEMARK OFFICE

Commissioner for Patents
United States Patent and Trademark Office
P.O. Box 1450
Alexandria, VA 22313-1450
www.uspto.gov

In re Patent No. 6126288
Issue Date: October 3,2000
Application No. 08957661
Filed: October 24,1997
Attorney Docket No. 07319/012004

:
:DECISION GRANTING PETITION
:UNDER 37 CFR 1.378(c)
:

This is a decision on the electronic petition, filed November 18,2008 ,under 37 CFR 1.378(c) to accept the unintentionally delayed payment of the 7.5 year maintenance fee for the above-identified patent.

The petition is **GRANTED**.

The maintenance fee is accepted, and the above-identified patent reinstated as of November 18,2008 . This decision also constitutes notice that the fee has been accepted. An electronic copy of the petition and this decision has been created as an entry in the Image File Wrapper. Nevertheless, petitioner should print and retain an independent copy.

Telephone inquiries related to this electronic decision should be directed to the Electronic Business Center at 1-866-217-9197.

Under the Paperwork Reduction Act of 1995, no persons are required to respond to a collection of information unless it displays valid OMB control number.

PETITION TO ACCEPT UNINTENTIONALLY DELAYED PAYMENT OF MAINTENANCE FEE IN AN EXPIRED PATENT (37 CFR 1.378(c))

Patent Number	Issue Date (YYYY-MM-DD)	Application Number	Filing Date (YYYY-MM-DD)	Docket Number (if applicable)
6126288	2000-10-03	08957661	1997-10-24	PRG-12004

CAUTION: Maintenance fee (and surcharge, if any) payment must correctly identify: (1) the patent number and (2) the application number of the actual U.S. application leading to issuance of that patent to ensure the fee(s) is/are associated with the correct patent. 37 CFR 1.366(c) and (d).

SMALL ENTITY
☐ Patentee claims, or has previously claimed, small entity status. See 37 CFR 1.27.

LOSS OF ENTITLEMENT TO SMALL ENTITY STATUS
☐ Patentee is no longer entitled to small entity status. See 37 CFR 1.27(g)

NOT Small Entity		Small Entity	
Fee	Code	Fee	Code
○ 3 ½ year	(1551)	○ 3 ½ year	(2551)
◉ 7 ½ year	(1552)	○ 7 ½ year	(2552)
○ 11 ½ year	(1553)	○ 11 ½ year	(2553)

SURCHARGE
The surcharge required by 37 CFR 1.20(i)(2) (Fee Code 1558) must be paid as a condition of accepting unintentionally delayed payment of the maintenance fee.

MAINTENANCE FEE (37 CFR 1.20(e)-(g))
The appropriate maintenance fee must be submitted with this petition.

STATEMENT
THE UNDERSIGNED CERTIFIES THAT THE DELAY IN PAYMENT OF THE MAINTENANCE FEE TO THIS PATENT WAS UNINTENTIONAL

PETITIONER(S) REQUEST THAT THE DELAYED PAYMENT OF THE MAINTENANCE FEE BE ACCEPTED AND THE PATENT REINSTATED

THIS PORTION MUST BE COMPLETED BY THE SIGNATORY OR SIGNATORIES

37 CFR 1.378(d) states: "Any petition under this section must be signed by an attorney or agent registered to practice before the Patent and Trademark Office, or by the patentee, the assignee, or other party in interest."

I certify, in accordance with 37 CFR 1.4(d)(4) that I am

◉ An attorney or agent registered to practice before the Patent and Trademark Office

○ A sole patentee

○ A joint patentee; I certify that I am authorized to sign this submission on behalf of all the other patentees.

○ A joint patentee; all of whom are signing this e-petition

○ The assignee of record of the entire interest

Patent Practitioner			
A signature of the applicant or representative is required in accordance with 37 CFR 1.33 and 10.18. Please see 37 CFR 1.4(d) for the form of the signature			
Signature	/Scott C Harris/	Date (YYYY-MM-DD)	2008-11-18
Name	Scott C Harris	Registration Number	32030

This collection of information is required by 37 CFR 1.378(c). The information is required to obtain or retain a benefit by the public which is to file (and by the USPTO to process) an application. Confidentiality is governed by 35 U.S.C. 122 and 37 CFR 1.11 and 1.14. This collection is estimated to take 1 hour to complete, including gathering, preparing, and submitting the completed application form to the USPTO. Time will vary depending upon the individual case. Any comments on the amount of time you require to complete this form and/ or suggestions for reducing this burden, should be sent to the Chief Information Officer, U.S. Patent and Trademark Office, U.S. Department of Commerce, P.O. Box 1450, Alexandria, VA 22313-1450. DO NOT SEND FEES OR COMPLETED FORMS TO THIS ADDRESS. **This form can only be used when in conjunction with EFS-Web. If this form is mailed to the USPTO, it may cause delays in reinstating the patent.**

Privacy Act Statement

The Privacy Act of 1974 (P.L. 93-579) requires that you be given certain information in connection with your submission of the attached form related to a patent application or patent. Accordingly, pursuant to the requirements of the Act, please be advised that: (1) the general authority for the collection of this information is 35 U.S.C. 2(b)(2); (2) furnishing of the information solicited is voluntary; and (3) the principal purpose for which the information is used by the U.S. Patent and Trademark Office is to process and/or examine your submission related to a patent application or patent. If you do not furnish the requested information, the U.S. Patent and Trademark Office may not be able to process and/or examine your submission, which may result in termination of proceedings or abandonment of the application or expiration of the patent.

The information provided by you in this form will be subject to the following routine uses:

1. The information on this form will be treated confidentially to the extent allowed under the Freedom of Information Act (5 U.S.C. 552) and the Privacy Act (5 U.S.C. 552a). Records from this system of records may be disclosed to the Department of Justice to determine whether the Freedom of Information Act requires disclosure of these record s.

2. A record from this system of records may be disclosed, as a routine use, in the course of presenting evidence to a court, magistrate, or administrative tribunal, including disclosures to opposing counsel in the course of settlement negotiations.

3. A record in this system of records may be disclosed, as a routine use, to a Member of Congress submitting a request involving an individual, to whom the record pertains, when the individual has requested assistance from the Member with respect to the subject matter of the record.

4. A record in this system of records may be disclosed, as a routine use, to a contractor of the Agency having need for the information in order to perform a contract. Recipients of information shall be required to comply with the requirements of the Privacy Act of 1974, as amended, pursuant to 5 U.S.C. 552a(m).

5. A record related to an International Application filed under the Patent Cooperation Treaty in this system of records may be disclosed, as a routine use, to the International Bureau of the World Intellectual Property Organization, pursuant to the Patent Cooperation Treaty.

6. A record in this system of records may be disclosed, as a routine use, to another federal agency for purposes of National Security review (35 U.S.C. 181) and for review pursuant to the Atomic Energy Act (42 U.S.C. 218(c)).

7. A record from this system of records may be disclosed, as a routine use, to the Administrator, General Services, or his/her designee, during an inspection of records conducted by GSA as part of that agency's responsibility to recommend improvements in records management practices and programs, under authority of 44 U.S.C. 2904 and 2906. Such disclosure shall be made in accordance with the GSA regulations governing inspection of records for this purpose, and any other relevant (i.e., GSA or Commerce) directive. Such disclosure shall not be used to make determinations about individuals.

8. A record from this system of records may be disclosed, as a routine use, to the public after either publication of the application pursuant to 35 U.S.C. 122(b) or issuance of a patent pursuant to 35 U.S.C. 151. Further, a record may be disclosed, subject to the limitations of 37 CFR 1.14, as a routine use, to the public if the record was filed in an application which became abandoned or in which the proceedings were terminated and which application is referenced by either a published application, an application open to public inspections or an issued patent.

9. A record from this system of records may be disclosed, as a routine use, to a Federal, State, or local law enforcement agency, if the USPTO becomes aware of a violation or potential violation of law or regulation.

UNITED STATES DEPARTMENT OF COMMERCE
Patent and Trademark Office
ASSISTANT SECRETARY AND COMMISSIONER OF
PATENTS AND TRADEMARKS
Washington, D.C. 20231

Paper No. 18

MYERS BIGEL SIBLEY & SAJOVEC
POST OFFICE BOX 37428
RALEIGH, NC 27627

COPY MAILED

NOV 0 2 2000

OFFICE OF PETITIONS
A/C PATENTS

In re Application of :
Albert S. Baldwin et al. :
Application No. 08/959,160 : ON PETITION
Filed: October 28, 1997 :
Attorney Docket No. 5470-148 :

This is a decision on the petition under 37 CFR 1.137(b), filed October 20, 2000, to revive the above-identified application.

The petition is **GRANTED**.

The above-identified application became abandoned for failure to reply in a timely manner to the non-final Office action mailed March 16, 2000, which set a shortened statutory period for reply of three (3) months. No extensions of time under the provisions of 37 CFR 1.136(a) were obtained. Accordingly, the above-identified application became abandoned on June 17, 2000.

Telephone inquiries concerning this decision should be directed to Irvin Dingle at (703) 306-5684.

The application file is being forwarded to Technology Center 1600 for further processing.

Irvin Dingle
Petitions Examiner
Office of Petitions
Office of the Deputy Commissioner
for Patent Examination Policy

UNITED STATES PATENT AND TRADEMARK OFFICE

COMMISSIONER FOR PATENTS
UNITED STATES PATENT AND TRADEMARK OFFICE
P.O. BOX 1450
ALEXANDRIA, VA 22313-1450
WWW.USPTO.GOV

Paper No.

HOWREY LLP - East
C/O IP DOCKETING DEPARTMENT
2941 FAIRVIEW PARK DR, SUITE 200
FALLS CHURCH VA 22042-2924

COPY MAILED

SEP 22 2009

OFFICE OF PETITIONS

In re Application of Van Der Lely Application No. 08/959,388 Patent No. 5,983,833 Filed: October 28, 1997 Issued: November 16, 1999 Attorney Docket No. 8553/125 Title: CONSTRUCTION INCLUDING A SHED FOR ANIMALS	DECISION ON PETITION PURSUANT TO 37 C.F.R. § 1.28(c)

This is a notice regarding your submission of May 7, 2009, which is properly treated as a request for acceptance of a fee deficiency submission under 37 C.F.R § 1.28(c). On September 1, 1998, the Court of Appeals for the Federal Circuit held that 37 CFR § 1.28(c) is the sole provision governing the time for correction of the erroneous payment of the issue fee as a small entity. See DH Technology v. Synergystex International, Inc. 154 F.3d 1333, 47 USPQ2d 1865 (Fed. Cir. Sept. 1, 1998).

The Office no longer investigates or rejects original or reissue applications under 37 C.F.R. § 1.56. 1098 Off. Gaz. Pat. Office 502 (January 3, 1989). Therefore, nothing in this notice is intended to imply that an investigation was done.

37 C.F.R. § 1.28(c)(2)(ii) sets forth that the party submitting the deficient payment must include:

(a) Each particular type of fee that was erroneously paid as a small entity, (e.g., basic statutory filing fee, two-month extension of time fee) along with the current fee amount for a non-small entity;
(b) The small entity fee actually paid, and when;
(c) The deficiency owed amount (for each fee erroneously paid); and
(d) The total deficiency payment owed, which is the

> sum or total of the individual deficiency owed amounts set forth in paragraph (c)(2)(ii)(C) of this section.

Petitioner has identified the particular type of fee that was erroneously paid as a small entity, when the small entity fee was actually paid, the small entity fee that was actually paid, the deficiency owed amount, and the total deficiency payment owed.

Your fee deficiency submission under 37 C.F.R. § 1.28 is hereby accepted. The petition is **GRANTED** accordingly.

This patent is now listed as a large entity.

Telephone inquiries regarding *this decision* should be directed to the undersigned at (571) 272-3225.[1]

/Paul Shanoski/
Paul Shanoski
Senior Attorney
Office of Petitions

---

1 Petitioner will note that all practice before the Office should be in writing, and the action of the Office will be based exclusively on the written record in the Office. See 37 C.F.R. § 1.2. As such, Petitioner is reminded that no telephone discussion may be controlling or considered authority for Petitioner's further action(s).

United States Patent and Trademark Office

COMMISSIONER FOR PATENTS
UNITED STATES PATENT AND TRADEMARK OFFICE
WASHINGTON, D.C. 20231
www.uspto.gov

Paper No. 33

James O. Skarsten
GE Medical Systems
P.O. Box 414, W-409
Milwaukee, WI 53201

MAY 20 2002

In re Application of
RHYNE
Application No. 08/960,132
Filed: February 10, 1997
For: Broadband Ultrasonic Transducers and Related Methods of Manufacture

DECISION ON PETITION

This is a decision on the petition filed on February 28, 2002, to withdraw the holding of abandonment of the above-identified application.

The petition is **DISMISSED**.

This application was held abandoned for failure to file new formal drawings as required in the Notice of Allowability mailed on December 1, 1999. A Notice of Abandonment was mailed on August 15, 2000.

Petitioner states that the FWC Application Transmittal filed on February 10, 1997, requested that all correspondence be sent to Dennis M. Flaherty (Flaherty), and that, despite such instruction, the Notice of Allowance and the Notice of Allowability were mailed to the inventor. Petitioner states that the Notice of Allowance was never received by Flaherty and that had he received the Notice of Allowance, an entry would have been made in the docket report for the above identified application. The petition includes a copy of the docket record where the Notice of Allowance would have been entered had it been received and docketed. Petitioner requests that the holding of abandonment be withdrawn and a new Office action be mailed.

A review of the written record indicates that the Notice of Allowance was mailed to the applicant at the correspondence address provided in the Declaration filed on July 15, 1993, for the parent Application No. 08/091,581. An inspection of the application file fails to indicate that a power of attorney to Dennis M. Flaherty was filed either in the parent or in the present application. Accordingly, the FWC Application Transmittal filed on February 10, 1997, was not signed by an attorney of record. As set forth in MPEP § 201.06(b), "A request for an FWC application under 37 CFR 1.62 may be signed by a registered practitioner acting in a representative capacity under

37 CFR 1.34(a). However, correspondence concerning the continuing application will be sent by the Office to the correspondence address as it appears on the prior nonprovisional application until a new power of attorney, or change of correspondence address signed by an attorney or agent of record in the prior application, is filed in the FWC." Therefore, the evidence of record is that the Notice of Allowance was properly mailed to the correspondence address provided in the Declaration filed on July 15, 1993, albeit addressed to the applicant instead of the designated attorney, James O. Skarsten.

The fact that the Notice of Allowance was directed to the applicant did not prevent the Notice of Allowance from reaching a registered practitioner acting in a representative capacity. A review of the application file indicates that the issue fee was timely paid by Phyllis Y. Price on February 8, 2002. Accordingly, the evidence of record indicates that the Notice of Allowance was in fact received by a registered practitioner. Since the Notice of Allowability was mailed along with the Notice of Allowance, there is a strong presumption that the Notice of Allowability was likewise received by a registered practitioner acting in a representative capacity.

The showing of record establishes only that the petitioner did not receive the Notice of Allowance at the petitioner's current address. However, the Notice of Allowance was not mailed to the petitioner's current address. Rather the Notice of Allowance was mailed to the correspondence address specified by the applicant in the Declaration. As such, it is immaterial that the petitioner has demonstrated that the Notice of Allowance was not received at his current location. Furthermore, the record indicates that the Notice of Allowance was received by a registered practitioner. Thus, the presumption is that the Notice of Allowability was likewise received by a registered practitioner. Consequently, the petitioner must establish that the Notice of Allowability was not received by a registered practitioner at the correspondence address of record. Since the petitioner has not made the requisite showing, the holding of abandonment is proper.

Petitioner may wish to consider filing a petition to the Commissioner under 37 CFR § 1.137 requesting that the application be revived. See MPEP § 711.03(c).

The Change of Address filed on January 9, 2001, has not been accepted, since it is not signed by an attorney or agent of record. A courtesy copy of this decision is being provided to the petitioner at the below address, but future correspondence will **NOT** be so addressed unless a new power of attorney is provided or the Change of Address is ratified by an attorney of record.

Any questions regarding this decision should be directed to Hien H. Phan, Special Program Examiner, at (703) 308-7502. Any request for reconsideration of this decision must be submitted within TWO (2) MONTHS from the mail date of this decision.

Richard K. Seidel, Director
Technology Center 2800 - Semiconductors, Electrical
and Optical Systems and Components

cc: Dennis M. Flaherty, Esq.
OSTRAGER CHONG & FLAHERTY LLP
825 Third Avenue, 30th Floor
New York, NY 10022-7519

UNITED STATES PATENT AND TRADEMARK OFFICE

Commissioner for Patents
United States Patent and Trademark Office
Washington, D.C. 20231
www.uspto.gov

Paper No. 37

DENNIS M FLAHERTY ESQ
OSTRAGER CHONG & FLAHERTY LLP
825 THIRD AVENUE
30TH FLOOR
NEW YORK NY 10022-7519

COPY MAILED

SEP 1 2 2002

OFFICE OF PETITIONS

In re Application of
Theodore Rhyne
Application No. 08/960,132
Filed: September 23, 1997
Attorney Docket No. 15UL4489

ON PETITION

This is a decision on the petition to revive the above identified application pursuant to 37 CFR 1.137(b), filed on June 24, 2002 (Certificate of Mailing dated June 20, 2002).

The petition is **GRANTED.**

The above-identified application became abandoned for failure to timely file formal drawings as required by the Notice of Allowability mailed December 1, 1999. This Notice set a non extendable period for reply of three (3) months to file formal drawings. No formal drawings having been received, the above identified application became abandoned on March 2, 2000. A Notice of Abandonment was mailed on August 15, 2000. Petitioner filed a petition to withdraw the holding of abandonment on February 28, 2002. However, that petition was dismissed in a decision mailed on May 20, 2002.

With the instant petition, petitioner has met the requirements for a grantable petition under 37 CFR 1.137(b). Petitioner paid the petition fee, submitted the required reply (formal drawings), and made the proper statement of unintentional delay.

As the issue fee was previously paid on February 8, 2000, the $1,280 issue fee submitted on petition will be refunded to petitioner under separate cover.

The application file is being forwarded to the Office of Patent Publication for processing into a patent.

Telephone inquiries concerning this decision should be directed to the undersigned at (703)305-0272.

Cliff Congo
Petitions Attorney
Office of Petitions
Office of the Deputy Commissioner
for Patent Examination Policy

UNITED STATES PATENT AND TRADEMARK OFFICE

COMMISSIONER FOR PATENTS
UNITED STATES PATENT AND TRADEMARK OFFICE
WASHINGTON, D.C. 20231
www.uspto.gov

Paper No. 43

DENNIS M. FLAHERTY, ESQ.
OSTRAGER CHONG & FLAHERTY LLP
825 THIRD AVENUE, 30TH FLOOR
NEW YORK, NY 10022-7519

COPY MAILED

NOV 0 1 2002

OFFICE OF PETITIONS

In re Application of
Theodore Rhyne
Application No. 08/960,132
Filed: September 23, 1997
Attorney Docket No. 15UL3888

ON PETITION

This is a decision on the petition, filed October 29, 2002, under 37 CFR 1.313(c)(3) to withdraw the above-identified application from issue after payment of the issue fee.

The petition is **GRANTED**.

The above-identified application is withdrawn from issue in favor of a continued prosecution application (CPA) under 37 CFR 1.53(d).

Petitioner is advised that the issue fee paid on February 8, 2000 in the parent application is not refundable nor can it be applied towards any new Notice of Allowance which may issue on the CPA filed October 29, 2002.

Telephone inquiries should be directed to the undersigned at (703) 305-8859.

The application is being forwarded to Technology Center Art Unit 2834 for processing of the CPA.

Karen Creasy

Karen Creasy
Petitions Examiner
Office of Petitions
Office of the Deputy Commissioner
for Patent Examination Policy

UNITED STATES PATENT AND TRADEMARK OFFICE

Commissioner for Patents
United States Patent and Trademark Office
P.O. Box 1450
Alexandria, VA 22313-1450
www.uspto.gov

In re Patent No. 5834137
Issue Date: November 10,1998
Application No. 08960606
Filed: October 29,1997
Attorney Docket No. 95-18A

:
:DECISION GRANTING PETITION
:UNDER 37 CFR 1.378(c)
:

This is a decision on the electronic petition, filed January 24,2007 ,under 37 CFR 1.378(c) to accept the unintentionally delayed payment of the 7.5 year maintenance fee for the above-identified patent.

The petition is GRANTED.

The maintenance fee is accepted, and the above-identified patent reinstated as of January 24,2007 . This decision also constitutes notice that the fee has been accepted. An electronic copy of the petition and this decision has been created as an entry in an Image File Wrapper. Nevertheless, petitioner should print and retain an independent copy

Telephone inquires related to this electronic decision should be directed to the Electronic Business Center at 1-866-217-9197.

Under the Paperwork Reduction Act of 1995, no persons are required to respond to a collection of information unless it displays valid OMB control number.

PETITION TO ACCEPT UNINTENTIONALLY DELAYED PAYMENT OF MAINTENANCE FEE IN AN EXPIRED PATENT (37 CFR 1.378(c))

Patent Number	Issue Date (YYYY-MM-DD)	Application Number	Filing Date (YYYY-MM-DD)	Docket Number (if applicable)
5834137	1998-11-10	08960606	1997-10-29	NREL 95-18A

CAUTION: Maintenance fee (and surcharge, if any) payment must correctly identify: (1) the patent number and (2) the application number of the actual U.S. application leading to issuance of that patent to ensure the fee(s) is/are associated with the correct patent. 37 CFR 1.366(c) and (d).

SMALL ENTITY
☒ Patentee claims, or has previously claimed, small entity status. See 37 CFR 1.27.

LOSS OF ENTITLEMENT TO SMALL ENTITY STATUS
☐ Patentee is no longer entitled to small entity status. See 37 CFR 1.27(g)

NOT Small Entity		Small Entity	
Fee	Code	Fee	Code
○ 3 ½ year	(1551)	○ 3 ½ year	(2551)
○ 7 ½ year	(1552)	◉ 7 ½ year	(2552)
○ 11 ½ year	(1553)	○ 11 ½ year	(2553)

SURCHARGE
The surcharge required by 37 CFR 1.20(i)(2) (Fee Code 1558) must be paid as a condition of accepting unintentionally delayed payment of the maintenance fee.

MAINTENANCE FEE (37 CFR 1.20(e)-(g))
The appropriate maintenance fee must be submitted with this petition.

STATEMENT
THE UNDERSIGNED CERTIFIES THAT THE DELAY IN PAYMENT OF THE MAINTENANCE FEE TO THIS PATENT WAS UNINTENTIONAL

PETITIONER(S) REQUEST THAT THE DELAYED PAYMENT OF THE MAINTENANCE FEE BE ACCEPTED AND THE PATENT REINSTATED

THIS PORTION MUST BE COMPLETED BY THE SIGNATORY OR SIGNATORIES

37 CFR 1.378(d) states: "Any petition under this section must be signed by an attorney or agent registered to practice before the Patent and Trademark Office, or by the patentee, the assignee, or other party in interest."

I certify, in accordance with 37 CFR 1.4(d)(4) that I am

◉ An attorney or agent registered to practice before the Patent and Trademark Office

○ A sole patentee

○ A joint patentee; I certify that I am authorized to sign this submission on behalf of all the other patentees.

○ A joint patentee; all of whom are signing this e-petition

○ The assignee of record of the entire interest

Patent Practitioner			
A signature of the applicant or representative is required in accordance with 37 CFR 1.33 and 10.18. Please see 37 CFR 1.4(d) for the form of the signature			
Signature	/Paul J. White/	Date (YYYY-MM-DD)	
Name	PAUL J. WHITE	Registration Number	30436

This collection of information is required by 37 CFR 1.378(c). The information is required to obtain or retain a benefit by the public which is to file (and by the USPTO to process) an application. Confidentiality is governed by 35 U.S.C. 122 and 37 CFR 1.11 and 1.14. This collection is estimated to take 1 hour to complete, including gathering, preparing, and submitting the completed application form to the USPTO. Time will vary depending upon the individual case. Any comments on the amount of time you require to complete this form and/ or suggestions for reducing this burden, should be sent to the Chief Information Officer, U.S. Patent and Trademark Office, U.S. Department of Commerce, P.O. Box 1450, Alexandria, VA 22313-1450. DO NOT SEND FEES OR COMPLETED FORMS TO THIS ADDRESS. **This form can only be used when in conjunction with EFS-Web. If this form is mailed to the USPTO, it may cause delays in reinstating the patent.**

Privacy Act Statement

The Privacy Act of 1974 (P.L. 93-579) requires that you be given certain information in connection with your submission of the attached form related to a patent application or patent. Accordingly, pursuant to the requirements of the Act, please be advised that: (1) the general authority for the collection of this information is 35 U.S.C. 2(b)(2); (2) furnishing of the information solicited is voluntary; and (3) the principal purpose for which the information is used by the U.S. Patent and Trademark Office is to process and/or examine your submission related to a patent application or patent. If you do not furnish the requested information, the U.S. Patent and Trademark Office may not be able to process and/or examine your submission, which may result in termination of proceedings or abandonment of the application or expiration of the patent.

The information provided by you in this form will be subject to the following routine uses:

1. The information on this form will be treated confidentially to the extent allowed under the Freedom of Information Act (5 U.S.C. 552) and the Privacy Act (5 U.S.C. 552a). Records from this system of records may be disclosed to the Department of Justice to determine whether the Freedom of Information Act requires disclosure of these record s.

2. A record from this system of records may be disclosed, as a routine use, in the course of presenting evidence to a court, magistrate, or administrative tribunal, including disclosures to opposing counsel in the course of settlement negotiations.

3. A record in this system of records may be disclosed, as a routine use, to a Member of Congress submitting a request involving an individual, to whom the record pertains, when the individual has requested assistance from the Member with respect to the subject matter of the record.

4. A record in this system of records may be disclosed, as a routine use, to a contractor of the Agency having need for the information in order to perform a contract. Recipients of information shall be required to comply with the requirements of the Privacy Act of 1974, as amended, pursuant to 5 U.S.C. 552a(m).

5. A record related to an International Application filed under the Patent Cooperation Treaty in this system of records may be disclosed, as a routine use, to the International Bureau of the World Intellectual Property Organization, pursuant to the Patent Cooperation Treaty.

6. A record in this system of records may be disclosed, as a routine use, to another federal agency for purposes of National Security review (35 U.S.C. 181) and for review pursuant to the Atomic Energy Act (42 U.S.C. 218(c)).

7. A record from this system of records may be disclosed, as a routine use, to the Administrator, General Services, or his/her designee, during an inspection of records conducted by GSA as part of that agency's responsibility to recommend improvements in records management practices and programs, under authority of 44 U.S.C. 2904 and 2906. Such disclosure shall be made in accordance with the GSA regulations governing inspection of records for this purpose, and any other relevant (i.e., GSA or Commerce) directive. Such disclosure shall not be used to make determinations about individuals.

8. A record from this system of records may be disclosed, as a routine use, to the public after either publication of the application pursuant to 35 U.S.C. 122(b) or issuance of a patent pursuant to 35 U.S.C. 151. Further, a record may be disclosed, subject to the limitations of 37 CFR 1.14, as a routine use, to the public if the record was filed in an application which became abandoned or in which the proceedings were terminated and which application is referenced by either a published application, an application open to public inspections or an issued patent.

9. A record from this system of records may be disclosed, as a routine use, to a Federal, State, or local law enforcement agency, if the USPTO becomes aware of a violation or potential violation of law or regulation.

UNITED STATES PATENT AND TRADEMARK OFFICE

Commissioner for Patents
United States Patent and Trademark Office
Washington, D.C. 20231
www.uspto.gov

MAILED

FEB 01 2002

DIRECTOR'S OFFICE
TECHNOLOGY CENTER 2100

Paper No. 10

Kirk Wong
Law Offices of Michael A. Glenn
3475 Edison Way, Ste. L
Menlo Park, California 94025

In re Application of:	)	
Johnson	)	
Application No.: 08/960,755	)	
Filed: October 29, 1997	)	**DECISION ON PETITION UNDER 37**
For: METHOD AND SYSTEM FOR	)	**C.F.R. § 1.181 TO WITHDRAW**
CONSOLIDATING AND	)	**HOLDING OF ABANDONMENT**
DISTRIBUTING INFORMATION	)	

This is a decision on the petition filed June 11, 2001 under 37 CFR § 1.137(b) to revive an abandoned application. The petition is being treated as a petition under 37 CFR § 1.181(a) to withdraw the holding of abandonment of the above-identified application.

This application was held abandoned for failure to respond in a timely manner to the Office Action mailed February 19, 1999. In the apparent absence of a response to the February 19, 1999 communication, the application was held abandoned and a Notice of Abandonment was mailed September 27, 1999.

Petitioner states that a complete response to the February 19, 1999 communication was in fact timely filed. To support this assertion, petitioner has submitted a copy of a return postcard which acknowledges receipt by the U.S. Patent and Trademark Office (USPTO) on August 02, 1999. The petition also includes copies of a petition for extension of time and an amendment.

The original response, acknowledged as having been received in the USPTO on August 02, 1999 is not of record in the application file and cannot be located. However, M.P.E.P. § 503 states that "A post card receipt which itemizes and properly identifies the papers which are being filed serves as prima facie evidence of receipt in the USPTO of all the items listed thereon on the date stamped thereon by the USPTO." The postcard indicates that the response includes a petition for an extention of time and an amendment.

In reviewing the petition and the attached copies of the postcard receipt, the petition for extention of time and an amendment, it is noted the papers were timely filed, but with an incorrect application

serial number 08/968,755. The correct application serial number should be --08/960,755--.

Under current Office procedure, a response that has an incorrect application number is handled in accordance with MPEP § 508.03. If a paper having an incorrect application number contains sufficient information to identify the correct application and was timely filed, the holding of abandonment will be withdrawn. In reviewing the papers submitted, it is concluded that the information contained thereon, includes name of the inventor, filing date of the application, title of the invention and the name of an examiner in the TC thereon which is deemed sufficient to associate the papers with the instant file.

The Notice of Abandonment was mailed September 27, 1999, and the petition was not filed until June 11, 2001. MPEP § 711.03(c)(I) states in part that "... 37 CFR 1.181(f) provides that, inter alia, except as otherwise provided, any petition not filed within 2 months from the action complained of may be dismissed as untimely. Therefore, any petition (under 37 CFR 1.181) to withdraw the holding of abandonment **not filed within 2 months** of the mail date of a notice of abandonment (the action complained of) may be dismissed as untimely. 37 CFR 1.181(f). **Rather than dismiss an untimely petition to withdraw the holding of abandonment** under 37 CFR 1.181(f), the Office may treat an untimely petition to withdraw the holding of abandonment on its merits on the condition that ... The Office may treat an untimely petition to withdraw the holding of abandonment on its merits in a utility or plant application filed on or after June 8, 1995, on the condition that the petition is accompanied by a **terminal disclaimer** dedicating to the public a terminal part of the term of any patent granted thereon that would extend beyond the date 20 years from the filing date of the application, or the earliest application to which the application specifically refers under 35 U.S.C. 120, 121, or 365(c). In either case, the terminal disclaimer must also apply to any patent granted on any application that claims the benefit of the filing date of the application under 35 U.S.C. 120, 121, or 365(c). Such a terminal disclaimer is not required under 37 CFR 1.137(d) because abandonment of an application is a per se failure to exercise due diligence, and as such, an applicant cannot obtain patent term extension under 35 U.S.C. 154(b) due to prosecution delay caused by abandonment of the application. Where a petition to withdraw the holding of abandonment is granted, the application is considered to never have been abandoned and, as such, the prosecution delay caused by the treatment of the application as abandoned is not considered a per se failure to exercise due diligence. Thus a terminal disclaimer is required to avoid granting patent term extension under 35 U.S.C. 154(b) due to prosecution delay caused by the treatment of the application as abandoned."

For the above stated reasons, the petition is **GRANTED**. The terminal disclaimer filed June 11, 2001 has been entered and the Notice of Abandonment is hereby withdrawn.

Since the petition under 37 CFR 1.181(a) to withdraw the holding of abandonment does not require a fee, the fee of $620 to revive an abandoned application will be credited to applicant's representative Deposit Account 07-1445.

The application file is being forwarded to the Examiner for appropriate action.

John J. Love, Group Director
Technology Center 2100
Computer Architecture, Software,
and Electronic Commerce

UNITED STATES PATENT AND TRADEMARK OFFICE

Commissioner for Patents
United States Patent and Trademark Office
Washington, D.C. 20231
www.uspto.gov

Paper No.

Human Genome Sciences, Inc.
9410 Key West Avenue
Rockville, MD 20850

COPY MAILED

DEC 1 1 2000

OFFICE OF PETITIONS
A/C PATENTS

In re Application of :
Gil H. Choi, et al. :
Application No. 08/961,083 : ON PETITION
Filed: October 30, 1997 :
Attorney Docket No. PB340P2 :

This is a decision on the petition, filed December 11, 2000, under 37 CFR 1.313(c)(3) to withdraw the above-identified application from issue after payment of the issue fee.

The petition is **GRANTED**.

The above-identified application is withdrawn from issue in favor of a continued prosecution application (CPA) under 37 CFR 1.53(d).

The application is hereby withdrawn from issue.

Petitioner is advised that the issue fee paid on April 27, 2000 in the parent application is not refundable nor can it be applied towards any new Notice of Allowance which may issue on the CPA filed December 11, 2000.

Telephone inquiries should be directed to Marianne Morgan at (703) 306-3475.

The application is being forwarded to Technology Center 1600 for processing of the CPA.

Marianne E. Morgan

Marianne E. Morgan
Petitions Examiner
Office of Petitions
Office of the Deputy Assistant Commissioner
for Patent Policy and Projects

UNITED STATES PATENT AND TRADEMARK OFFICE

Commissioner for Patents
United States Patent and Trademark Office
Washington, D.C. 20231
www.uspto.gov

Paper No.

Date : December 11, 2000

TO : Director, Office of Publication and Dissemination

FROM : Office of the Deputy Commissioner
for Patent Examination Policy

SUBJECT : Withdrawal from Issue of

Applicant(s) : Gil H. Choi, et al.
Application No. : 08/961,083
Filed : October 30, 1997

The above-identified application has been assigned Patent No. 6,159,469 and an issue date of December 12, 2000.

It is hereby directed that this application be withdrawn from issue at the request of the applicant.

Do not refund the issue fee.

The following erratum should be published in the Official Gazette if the above-identified application is published in the OG of December 12, 2000:

> "All reference to Patent No. 6,159,469 to Gil H. Choi, of Rockville, Maryland for STREPTOCOCCUS PNEUMONIAE ANTIGENS AND VACCINES appearing in the Official Gazette of December 12, 2000 should be deleted since no patent was granted."

Marianne E. Morgan
Petitions Examiner
Office of Petitions
Office of the Deputy Commissioner
for Patent Examination Policy

cc: Geraldine Dozier, Crystal Park 3-441 (FAX-306-2737)
Deneise Boyd, Crystal Park 2, Suite 1100 (FAX-308-5413)
Mary Louise McAskill, Crystal Park 3-910 (FAX 305-4372)
Niomi Farmer, Crystal Park 3-910 (FAX-305-4372)
Janet Higgins, Crystal Park 3-910 (FAX-305-4372)
Mary E. Johnson (Cookie), P/OCS, CM1-6D07
Duane K.Davis, P/OCS, CM1-6A07

UNITED STATES PATENT AND TRADEMARK OFFICE

Commissioner for Patents
United States Patent and Trademark Office
P.O. Box 1450
Alexandria, VA 22313-1450
www.uspto.gov

Paper No.

HUMAN GENOME SCIENCES INC
INTELLECTUAL PROPERTY DEPT.
14200 SHADY GROVE ROAD
ROCKVILLE MD 20850

COPY MAILED

JAN 3 2005

OFFICE OF PETITIONS

In re Application of Choi et al. Application No. 08/961,083 Filed: October 30, 1997 Atty Docket No. PB340P2	DECISION ON APPLICATION FOR PATENT TERM ADJUSTMENT

This is a decision on the "APPLICATION FOR PATENT TERM ADJUSTMENT UNDER 37 C.F.R. § 1.705(b)," filed July 29, 2004. Applicants request correction of an entry of a calculation of patent term extension of zero (0) days to an entry of an initial determination of patent term adjustment (PTA) under 35 U.S.C. 154(b)(3)(i) of three hundred eighty-eight (388) days.

The application for patent term adjustment is **GRANTED**.

The Office has updated the PAIR screen to reflect that the correct Patent Term Adjustment (PTA) determination at the time of the mailing of the Notice of Allowance is three hundred eighty-eight **(388)** days. A copy of the updated PAIR screen, showing the correct determination, is enclosed.

On May 21, 2004, the Office mailed a Determination of Patent Term Extension under 35 U.S.C. 154(b) in the above-identified application. The Notice stated that the patent term extension (PTE) to date is 0 days.

On July 29, 2004, applicants timely[1] submitted an application for patent term adjustment, asserting that the application became subject to the provisions providing for adjustment of patent term due to examination delay under the Patent Term Guarantee Act of 1999 by virtue of the filing of a continuing prosecution application (CPA) on December 11, 2000. Furthermore, applicants assert entitlement to a patent term adjustment on the basis that the USPTO failed to mail a notification under 35 U.S.C. 132 or a notice of allowance under 35 U.S.C. 151 within fourteen months of the filing date of the application. Specifically, applicants

---

[1] The Issue Fee payment was also received in the Office on July 29, 2004.

contend entitlement to a patent term adjustment at the time of mailing of the Notice of Allowance of three hundred eighty-eight (388) days, the number of days in the period beginning on the day after the date that is fourteen months after the date on which the CPA was filed, which is February 11, 2002, and ending on the date of mailing of a restriction requirement on March 6, 2003.

Applicants state that the patent issuing from this application is not subject to any terminal disclaimer. Applicants further state that they have not engaged in any circumstance during the prosecution of the application which constitutes a failure to engage in reasonable efforts to conclude processing or examination of the application as set forth in 37 CFR § 1.704.

Applicants' arguments are well-taken. A review of the application history reveals that the application became eligible for patent term adjustment by virtue of the filing of a CPA on December 11, 2000. A review of the application history also confirms that, as of the time of mailing of the Notice of Allowance, applicants have correctly set forth the basis for adjustment pursuant to 37 C.F.R. § 1.702(a)(1) and the period of adjustment.

Moreover, applicants' filings have been carefully reviewed. It has been determined that, as of the mailing of the Notice of Allowance, applicants had not failed to engage in reasonable efforts to conclude prosecution or examination within the meaning of § 1.704.

In view thereof, the correct determination of patent term adjustment at the time of the mailing of the Notice of Allowance is three hundred eighty-eight (388) days.

The Office acknowledges submission of the $200.00 fee set forth in 37 CFR 1.18(e). No additional fees are required.

The application file is being forwarded to the Publishing Division for processing into a patent.

Telephone inquiries specific to this matter should be directed to Nancy Johnson, Senior Petitions Attorney, at (571) 272-3219.

Karin A Ferriter
for

Karin Ferriter
Senior Legal Advisor
Office of Patent Legal Administration
Office of Deputy Commissioner
for Patent Examination Policy

Enclosure: Copy of Revised PAIR Screen

UNITED STATES PATENT AND TRADEMARK OFFICE

Commissioner for Patents
United States Patent and Trademark Office
P.O. Box 1450
Alexandria, VA 22313-1450
www.uspto.gov

HUMAN GENOME SCIENCES INC.
INTELLECTUAL PROPERTY DEPT.
14200 SHADY GROVE ROAD
ROCKVILLE MD 20850

COPY MAILED
OCT 0 2 2006
OFFICE OF PETITIONS

In re Patent No. 7,056,510	:	DECISION ON REQUEST FOR
Choi et al.	:	RECONSIDERATION OF
Issue Date: June 6, 2006	:	PATENT TERM ADJUSTMENT
Application No. 08/961,083	:	and
Filed: October 30, 1997	:	NOTICE OF INTENT TO ISSUE
Attorney Docket No. PB340P2	:	CERTIFICATE OF CORRECTION
	:	

This is a decision on the "APPLICATION FOR PATENT TERM ADJUSTMENT UNDER 37 C.F.R. § 1.705(d) AND PETITION UNDER 37 C.F.R. § 1.181(a)(3)," filed August 4, 2006. Patentees request that the patent term adjustment indicated on the face of the patent be corrected from zero (0) days to at least nine hundred forty-two (942) days.

The request for reconsideration of the patent term adjustment indicated in the patent is **GRANTED**.

The patent term adjustment indicated in the patent is to be corrected by issuance of a certificate of correction showing a revised Patent Term Adjustment of NINE HUNDRED FORTY-TWO (942) days.

On June 6, 2006, the above-identified application matured into U.S. Patent No. 7,056,510, with a revised patent term adjustment of 0 days. On August 4, 2006, patentees timely submitted this request for reconsideration of patent term adjustment (with required fee) within 2 months of the issuance of the patent. Patentees point out that the patent issued without regard to the decision on petition mailed January 3, 2005 correcting the initial determination of PTA from 0 days to 388. The decision on petition was made due to an affirmation on the part of the Office that the application was eligible to PTA based on examination delay based on a CPA having been filed in the

application on December 11, 2000. Patentees contend that giving the decision effect a period of adjustment of 554 days should be entered for the period from four months after the issue fee was paid on July 29, 2004 until the patent issued on June 6, 2006. See § 1.703(a)(6). Alternatively, patentees contend that the PTA should be increased by 908 days for the period noted in 37 C.F.R. § 1.703(b) between the day after the date that is three years after the date on which the application was filed under 35 U.S.C. § 1.111(a)(December 12, 2003) and the date the patent issued (June 6, 2006). Patentees acknowledge that to the extent that periods of delay attributable to the grounds specified in 37 C.F.R. § 1.702 overlap, the period of adjustment will not exceed the actual number of days the issuance of the patent was delayed (35 U.S.C. 154(b)(2)(A)).

Pertinent to this case, 37 C.F.R. § 1.703(a) provides that:

The period of adjustment under § 1.702(a) is the sum of the following periods:

> (1) The number of days, if any, in the period beginning on the day after the date that is fourteen months after the date on which the application was filed under 35 U.S.C. 111(a) or fulfilled the requirements of 35 U.S.C. 371 and ending on the date of mailing of either an action under 35 U.S.C. 132, or a notice of allowance under 35 U.S.C. 151, whichever occurs first;
>
> (6) The number of days, if any, in the period beginning on the day after the date that is four months after the date the issue fee was paid and all outstanding requirements were satisfied and ending on the date a patent was issued.

As stated by patentees and as reflected in the decision mailed January 3, 2005, pursuant to § 1.702(a)(1), the application should have been accorded a period of adjustment of 388 days for Office delay in mailing a first notification under 35 U.S.C. 132, a restriction requirement mailed March 6, 2003.

Further, patentees are correct that there was an Office delay in issuing the patent within the meaning of § 1.703(a)(6). Patentees are also correct that the period of adjustment for this delay is 554 days.

Finally, the patent did issue three years and 908 days after the application filing date. Also as indicated by patentees, any days of delay for Office issuance of the patent more than 3 years after the filing date of the application which overlap with the days of patent term adjustment accorded prior to the issuance of the patent will not result in any additional patent term adjustment. Further, in considering the overlap, the entire period during which the application was pending (except for periods excluded under 35 U.S.C. 154(b)(1)(B)(i)-(iii), and not just the period beginning three years after the actual filing date of the application, is the period of delay under 35 U.S.C. 154(b)(1)(B) in determining whether periods of delay overlap under 35 U.S.C. 154(b)(2)(A). See 35 U.S.C. 154(b)(1)(B); 35 U.S.C. 154(b)(2)(A); and 37 CFR 1.703(f). In this instance, it is properly concluded that the 908 days totally overlaps with the 942 days already accorded. Thus, no additional days will be accorded.

The Office acknowledges submission of the $200.00 fee set forth in 37 CFR 1.18(e). No additional fees are required.

In view thereof, the patent should have issued with a revised patent term adjustment of nine hundred forty-two (942) days (388 + 554).

The Certificates of Correction Branch has been advised of this decision. The Certificates of Correction Branch is thereby forwarded this application for issuance of a certificate of correction in order to rectify this error. The Office will issue a certificate of correction indicating that the term of the above-identified patent is extended or adjusted by **nine hundred forty-two (942)** days.

Telephone inquiries specific to this matter should be directed to the undersigned at (571) 272-3219.

Nancy Johnson
Senior Petitions Attorney
Office of Petitions

Enclosure: Copy of DRAFT Certificate of Correction

UNITED STATES PATENT AND TRADEMARK OFFICE

CERTIFICATE OF CORRECTION

PATENT : 7,056,510 B1

DATED : June 6, 2006

INVENTOR(S) : Choi et al.

DRAFT

It is certified that error appears in the above-identified patent and that said Letters Patent is hereby corrected as shown below:

On the cover page,

[*] Notice: Subject to any disclaimer, the term of this patent is extended or adjusted under 35 USC 154(b) by (0) days

Delete the phrase "by 0" and insert – by 84 days--

UNITED STATES PATENT AND TRADEMARK OFFICE

Commissioner for Patents
United States Patent and Trademark Office
P.O. Box 1450
Alexandria, VA 22313-1450
www.uspto.gov

Mailed: AUG 27 2004

spg
Paper Number 28

In re application of	:	
Vadim V. Krongauz et al.	:	DECISION ON
Serial No. 08/961,084	:	PETITION
Filed: October 30, 1997	:	
For: DIELECTRIC, RADIATION-CURABLE COATING COMPOSITION	:	

This is a response to the REQUEST TO REINSTATE AND ISSUE APPLICATION filed on July 9, 2002 and resubmitted February 24, 2003. The request asks that the abandonment, as set forth in the Notice of Abandonment of May 21, 2002, for failure to timely file new formal drawings as required in the Notice of Allowability be withdrawn. The request asks that the abandonment be withdrawn because the Notice of Allowability did not require the submission of new formal drawings.

DECISION

The instant request has been accepted as a petition to withdraw the holding of abandonment under the provisions of 37 CFR 1.181(no fee) - no abandonment-in-fact. A review of the evidence presented by the applicant and a review of the USPTO application file establishes that the Notice of Allowability mailed to applicant (a copy of the Notice of Allowability mailed to applicant is attached to the instant request) and the Notice of Allowability in the USPTO application file did not include a notice to submit new formal drawings, the box on the Notice of Allowability labeled "CORRECTED DRAWINGS must be submitted" was not filled in requiring applicant to submit formal drawings. Thus in view of the evidence it is considered that applicant's request has merit and any holding of abandonment is hereby withdrawn, and the application is returned to pending status.

The application shall be forwarded to Publications Branch for processing and issuance.

The Petition is **GRANTED**.

Jacqueline Stone, Director
Technology Center 1700
Chemical and Materials Engineering

PILLSBURY WINTHROP, LLP
P.O. BOX 10500
MCLEAN VA 22102

UNITED STATES
PATENT AND
TRADEMARK OFFICE

Under Secretary of Commerce for Intellectual Property and
Director of the United States Patent and Trademark Office
Washington, DC 20231
www.USPTO.gov

Paper No. 18

Peter J. Manso
Edwards & Angell. L.P.
600 Corporate Drive
Suite 514
Fort Lauderdale, FL 33334

COPY MAILED

OCT 1 6 2001

OFFICE OF PETITIONS

In re Application of	:	
Eugenio A. Cefali	:	
Application No. 08/962,027	:	ON PETITION
Filed: October 31, 1997	:	
Attorney Docket No. 32892.23	:	

This is a decision on the petition under 37 CFR 1.137(b), filed September 28, 2001, to revive the above-identified application.

The petition is **DISMISSED**.

Any request for reconsideration of this decision must be submitted within **TWO (2) MONTHS** from the mail date of this decision. Extensions of time under 37 CFR 1.136(a) are permitted. The reconsideration request should include a cover letter entitled "Renewed Petition under 37 CFR 1.137(b)." This is **not** a final agency action within the meaning of 5 U.S.C. § 704.

A grantable petition under 37 CFR 1.137(b) must be accompanied by: (1) the reply required to the outstanding Office action or notice, unless previously filed; (2) the petition fee as set forth in 37 CFR 1.17(m); (3) a statement that the entire delay in filing the required reply from the due date for the reply until the filing of a grantable petition

pursuant to 37 CFR 1.137(b) was unintentional; and (4) any terminal disclaimer (and fee as set forth in 37 CFR 1.20(d)) required by 37 CFR 1.137(d). Where there is a question as to whether either the abandonment or the delay in filing a petition under 37 CFR 1.137 was unintentional, the Commissioner may require additional information. See MPEP 711.03(c)(III)(C) and (D). The instant petition lack(s) item(s) (1).

In view of the authorization contained in the petition to charge the necessary fees due, the $620.00 issue fee and $620.00 petition fee will be charged to Deposit Account No. 04-1105. However, there is no indication that formal drawings as required by the Notice of Allowability of March 2, 2001 have been submitted. Accordingly, this application cannot be revived until formal drawings have been submitted.

Further correspondence with respect to this matter should be addressed as follows:

By mail: Assistant Commissioner for Patents
Box DAC
Washington, D.C. 20231

By facsimile: (703) 308-6916
Attn: Office of Petitions

By hand: Office of Petitions
2201 South Clark Place
Crystal Plaza 4, Suite 3C23
Arlington, VA 22202

Telephone inquiries concerning this decision should be directed to Cheryl Gibson-Baylor at (703)308-5111, or in her absence, Sherry Brinkley at (703)305-9220.

Cheryl Gibson-Baylor
Petitions Examiner
Office of Petitions
Office of the Deputy Commissioner
for Patent Examination Policy

Sherry Brinkley
Petitions Examiner

UNITED STATES PATENT AND TRADEMARK OFFICE

COMMISSIONER FOR PATENTS
UNITED STATES PATENT AND TRADEMARK OFFICE
WASHINGTON, D.C. 20231
www.uspto.gov

Paper No.

KAREN J. MESSICK, ESQ.
c/o KOS PHARMACEUTICALS, INC.
1001 BRICKELL BAY DRIVE
25TH FLOOR
MIAMI, FL 33131

COPY MAILED

APR 1 1 2003

OFFICE OF PETITIONS

In re Application of :
Eugenio A. Cefali :
Application No. 08/962,027 :
Filed: October 31, 1997 :
Attorney Docket No. 20720-95585 :

ON PETITION

This is a decision on the petitions filed January 16, 2003, to (1) revive the above-identified application under 37 CFR 1.137(b) and (2) withdraw the above-identified application from issue after payment of the issue fee under 37 CFR 1.313(c)(2). This is also notice regarding your request for acceptance of a fee deficiency submission under 37 CFR 1.28.

The renewed petition under 1.137(b) is **GRANTED**.

The application became abandoned for failure to timely pay the issue fee in response to a Notice of Allowance mailed March 2, 2001. In an application or patent, abandoned or lapsed for failure to pay the issue fee or any portion thereof, the required reply must be the payment of the issue fee or any outstanding balance thereof. See MPEP 711.03(c)(III)(A)(1).

On September 28, 2001, a petition to revive was filed along with the $620 payment of the issue fee as a small entity. However, the petition was dismissed in a decision mailed October 16, 2001, since there was no indication that the formal drawings required by the Notice of Allowability mailed March 2, 2001 had been filed.

On January 16, 2003 petitioner submitted, inter alia, (1) a petition under 1.181(a) or, in the alternative, a petition under 37 CFR 1.137(b), including formal drawings and the balance of issue fee as a large entity; (2) a petition under 37 CFR 1.313(c)(2), including a Request for Continued Examination and a Preliminary Amendment; and (3) a Request to Correct Inventorship under 37 CFR 1.48(a), including a request to perfect claim to priority pursuant to 35 U.S.C. 120.

It is noted that petitioner states that a renewed petition, the formal drawings and an appropriate extension of time were filed using a Certificate of Mailing under 37 CFR 1.8 dated April 16, 2002, in response to the Decision Dismissing Petition mailed October 16, 2001. The evidence provided January 16, 2003 complies with the requirements of 37 CFR 1.8(b). Therefore it is conceded that that the papers containing a Certificate of Mailing dated April 16, 2002, would have been considered timely if received in the U.S. Patent and Trademark Office. Under the circumstances, the alternative petition filed January 16, 2003 has been treated as a renewed petition under 37 CFR 1.137(b). Except for the fee for the 4-month petition for extension of time submitted with the original filing on April 16, 2002, no further fee is required for treatment of this petition.

37 CFR 1.137(b)(3) requires a statement that the entire delay in filing the required reply from the due date for the reply until the filing of a grantable petition pursuant to 37 CFR 1.137(b) was unintentional. While the statement in this petition varies from the language required by 37 CFR 1.137(b)(3), the statement is being construed as the statement required by 37 CFR 1.137(b)(3). Petitioner must notify the Office if this is **not** a correct interpretation of the statement contained in the instant petition.

Since petitioner has now complied with 37 CFR 1.137(b), the application may be returned to a pending status. However, in view of petitioner's request to withdraw the application from issue, the application is hereby withdrawn from issue for consideration of a submission under 37 CFR 1.114 (request for continued examination). See 37 CFR 1.313(c)(2),

The petition under 37 CFR 1.313(c)(2) is **GRANTED**.

Petitioner is advised that the issue fee paid on September 28 2001, in the above-identified application cannot be refunded. If, however, the above-identified application is again allowed, petitioner may request that it be applied towards the issue fee required by the new Notice of Allowance. [1]

---

[1]The request to apply the issue fee to the new Notice may be satisfied by completing and returning the new Issue Fee Transmittal Form PTOL-85(b), which includes the following language thereon: "Commissioner for Patents is requested to apply the Issue Fee and Publication Fee (if any) or re-apply any previously paid issue fee to the application identified above." Petitioner is advised that, whether a fee is indicated as being due or not, the Issue Fee Transmittal Form **must** be completed and timely submitted to avoid abandonment. Note the language in bold text on the first page of the Notice of Allowance and Fee(s) Due (PTOL-85).

Your fee deficiency submission under 37 CFR 1.28 is hereby **ACCEPTED.**

Small entity status no longer applies.

Telephone inquiries regarding this decision should be directed to the undersigned at (703) 305-9220.

The application is being forwarded to Technology Center 1615 for (1) processing the request for continued examination under 37 CFR 1.114 and (2) consideration of the request to Correct Inventorship under 37 CFR 1.48(a), including the request to perfect claim to priority pursuant to 35 U.S.C. 120.

Sherry D. Brinkley

Sherry D. Brinkley
Petitions Examiner
Office of Petitions
Office of the Deputy Commissioner
for Patent Examination Policy

UNITED STATES
PATENT AND
TRADEMARK OFFICE

UNDER SECRETARY OF COMMERCE FOR INTELLECTUAL PROPERTY AND
DIRECTOR OF THE UNITED STATES PATENT AND TRADEMARK OFFICE
WASHINGTON, D.C. 20231
WWW.USPTO.GOV

Paper No. 29

Karen J. Messick
Kos Pharmaceuticals, Inc.
1001 Brickell Bay Drive
25th Floor
Miami, Florida 33131

Date: June 12, 2003
Application No. 08/962,027
Filed: October 31, 1997
Subject: **INTERMEDIATE RELEASE NICOTINIC ACID COMPOSITION FOR TREATING HYPERLIPIDEMIA**

ON PETITION
37 CFR 1.48(a)

Receipt is acknowledged of the petitions filed January 16, 2003, under 37 CFR 1.48(a) for correction of inventorship. The petition has been **GRANTED**.

In view of the papers filed , it has been found that this non-provisional application, as filed, through error and without deceptive intent, improperly set forth the Inventorship, and accordingly, this application has been changed by the addition of **DAVID J. BOVA**. The application will be forwarded to the Office of Initial Patent Examination(OIPE) for issuance of a corrected filing receipt, and correction of the file jacket and PTO PALM data to reflect the inventorship as corrected.

THURMAN K. PAGE
United States Patent and Trademark Office
Technology Center 1600
SPE, ART UNIT 1615
CM1- 2B01
703-308-2927

SPE RESPONSE FOR CERTIFICATE OF CORRECTION

Paper No.: _____

DATE : 10-24-06

TO SPE OF : ART UNIT 1615

SUBJECT : Request for Certificate of Correction for Appl. No.: 08/962027 Patent No.: 6818229

Please respond to this request for a certificate of correction within 7 days.

Please review the requested changes/corrections as shown in the **COCIN** document(s) in the IFW application image. No new matter should be introduced, nor should the scope or meaning of the claims be changed.

Please check Drawings

Please complete the response (see below) and forward the completed response to scanning using document code **COCX**.

E Young

Certificates of Correction Branch

703-308-9390 ext. 117

Thank You For Your Assistance

The request for issuing the above-identified correction(s) is hereby:

Note your decision on the appropriate box.

- ☒ **Approved** — All changes apply.
- ☐ **Approved in Part** — Specify below which changes do not apply.
- ☐ **Denied** — State the reasons for denial below.

Comments: _____

MICHAEL P. WOODWARD
SUPERVISORY PATENT EXAMINER
TECHNOLOGY CENTER 1600

M P Woodward 1615

SPE Art Unit

UNITED STATES DEPARTMENT OF COMMERCE
Patent and Trademark Office

Patent Cooperation Treaty Legal Office

Address: Assistant Commissioner for Patents
Box PCT
Washington, D.C. 20231

MAR 30 2000

#5

Charles G. Nessler
P.O. Box H
Chester, CT 06412

In re Application of	: DECISION ON PETITION
GOLICZ et al	: UNDER 37 CFR 1.181,
Application No.: 08/962,077	: REQUEST TO WITHDRAW
Filing Date: 14 September 1998	: PETITION UNDER 37
Attorney Docket No.: 9534	: CFR 1.181 AND REQUEST
For: SHEET FEEDING APPARATUS	: FOR REFUND

This is in response to applicants' PETITION RELATING TO FILING DATE pursuant to 37 CFR 1.181 filed 14 September 1998, WITHDRAWAL OF PETITION RELATING TO FILING DATE (PETITION DATED SEPTEMBER 9, 1998) filed 21 September 1998, and REQUEST FOR REFUND OF PETITION FEE filed 04 June 1999.

BACKGROUND

On 01 April 1997, applicants filed international application No. PCT/US97/05320, which claims a priority date of 01 April 1996 and designated the United States. A copy of the international application was communicated to the United States Patent and Trademark Office from the International Bureau on 09 October 1997. The twenty-month deadline for entry into the national stage in the U.S. expired as of midnight of 01 December 1997.

On 31 October 1997, applicants filed in the United States Patent and Trademark Office (PTO), *inter alia*, a cover letter, a declaration and power of attorney, a small entity statement, a preliminary amendment, 8 sheets of formal drawings, and a check for $527. The cover letter states that "[t]his application is a continuation of [PCT/US97/05320]."

On 14 July 1998, the PTO mailed a NOTICE OF INCOMPLETE APPLICATION (Form PTO-1123) indicating that a filing date had not been assigned because the specification was missing.

On 14 September 1998, applicants submitted a TRANSMITTAL OF SPECIFICATION which was accompanied by the entire PCT application for PCT No. PCT/US97/05320. This TRANSMITTAL stated that this "same document was previously transmitted to the USPTO as designated office on behalf of the International Bureau of WIPO".

On 14 September 1998, applicants filed a PETITION RELATING TO FILING DATE pursuant to 37 CFR 1.181. The petition requested that: (1) the above mentioned application be granted a filing date of 31 October 1997 because the application was complete at that time "within the meaning of 35 USC 371"; (2) the above mentioned application be granted an effective filing date of 01 April 1997 under PCT Article 11(3), 35 USC 371, and 37 CFR 1.53(f); and (3) a refund of the petition fee because the application was complete as of 31 October 1997. The petition states that "[t]o commence the national stage, 35 USC 371(c)(2) says that a copy of the international application ought to be filed 'unless . . . already communicated by the International Bureau'."

Between 14 September 1998 and 21 September 1998, applicants received a Filing Receipt (Form PTO-103X) mailed by the PTO indicating the filing date of the above-mentioned application as 31 October 1997 and indicating that the application is a continuation of PCT/US97/05320 filed 01 April 1997.

On 21 September 1998, applicants filed a WITHDRAWAL OF PETITION RELATING TO FILING DATE (PETITION DATED SEPTEMBER 9, 1998) requesting withdrawal of the previously filed petition and a refund of the petition fee. The petition states that the Filing Receipt indicates a filing date of 31 October 1997 which is the date applicants petitioned for. This WITHDRAWAL was accompanied by a copy of the Filing Receipt.

On 04 June 1999, applicants filed a STATUS INQUIRY and a REQUEST FOR REFUND OF PETITION FEE.

On 18 June 1999, applicants filed a STATUS INQUIRY.

On 22 October 1999, applicants filed a status inquiry directed to the Supervisory Patent Examiner of Art Unit 3615.

On 25 February 2000, applicants filed a letter directed to Ms. Eugenia Jones in the Office of Petitions noting that if any papers were missing from the file of the above-mentioned application, applicants' representative could have them hand delivered.

On 01 March 2000, applicants filed a PETITION TO MAKE SPECIAL.

On 01 March 2000, applicants filed a LETTER. This LETTER noted that applicants were under the impression that various papers were missing from the file and provided duplicate copies of several of the papers previously filed.

DISCUSSION

This application has been forwarded to the PCT Legal Office for determination of compliance with 35 U.S.C. 371(c).

Any intended filing of an international application as a national stage application must clearly and unambiguously be identified as such and must satisfy all of the conditions set forth in 35 U.S.C. 371(c). The official PTO Notice published in the Official Gazette at 1077 OG 13 entitled "Minimum Requirements for Acceptance of Applications Under 35 U.S.C. 371 (the National Stage of PCT)" states, in part, the following:

> The Patent and Trademark Office is continuing to receive application papers which do not clearly identify whether the papers (1) are being submitted to enter the national stage of the Patent Cooperation Treaty (PCT) under 35 U.S.C. 371 or (2) are being filed as a regular national application under 35 U.S.C. 111.
>
> * * *
>
> If there are any conflicting instructions as to which sections of the statute (371 or 111) is intended the application will be accepted under 35 U.S.C. 111.

In the present application, the submission filed 31 October 1997 contained no indication that the application was being submitted under 35 U.S.C. 371. The cover letter stated that the application was a *continuation* of PCT/US97/05320 indicating that applicants intended to claim benefit under 35 U.S.C. 120. Such benefit cannot be claimed in an application filed under 35 U.S.C. 371. Moreover, Section 371 of the statute was not mentioned in any of the papers filed in this application until the petition filed 14 September 1998. Accordingly, the application will be treated as filed under 35 U.S.C. 111.

The petition filed 14 September 1998 states that "[t]o commence the national stage, 35 USC 371(c)(2) says that a copy of the international application ought to be filed 'unless . . . already communicated by the International Bureau'." However, for the reasons set forth above, the present application has been treated as filed under 35 U.S.C. 111. Consequently, a specification was required on filing. 35 U.S.C. 111(a)(4) states that "[t]he filing date of an application shall be the date on which the specification and any required drawing are received in the Patent and Trademark Office." 37 CFR 1.53(b) states that the filing date of an application filed under that section "is the date on which a specification as prescribed by 35 U.S.C. 112 containing a description pursuant to § 1.71 and at least one claim pursuant to § 1.75, and any drawing required by § 1.81(a) are filed in the Patent and Trademark Office." Accordingly, the filing date of the above mentioned application is the date of receipt of the specification, 14

September 1998, rather than 31 October 1997.[1]

The specification filed on 14 September 1998 meets the requirements for granting a filing date for a filing under 35 U.S.C. 111(a). However, the declaration filed 31 October 1997 is defective in that it fails to properly identify the specification to which it is directed, as required under 37 CFR 1.63(a)(2). The declaration identifies the international application, which is improper in an application filed under 35 U.S.C. 111. See MPEP § 1896.

Applicants are not entitled to claim benefit under 35 U.S.C. 120 and 365(c) of the filing date of the international application for the common subject matter, since this application (Application No. 08/962,077) and the international application (PCT/US97/05320) designating the United States were not copending on 14 September 1998. Applicants may wish to consider filing a petition to revive the international application for the purposes of establishing copendency.

As to the Request for Refund of the petition fee of $130 paid 14 September 1999, "a mere change of purpose after the payment of money, as when a party desires to withdraw an application, an appeal, or a request for oral hearing, will not entitle a party to demand such a return." 37 CFR 1.26. Here, there is a mere change of purpose, i.e, withdrawal of the petition, after the payment of money.

CONCLUSION

The petition under 37 CFR 1.181 and the request to withdraw the petition under 37 CFR 1.181 are **DISMISSED** for the reasons set forth above.

The Request for Refund under 37 CFR 1.26 is **DISMISSED** for the reasons set forth above.

The Filing Receipt received by applicants between 14 September 1998 and 21 September 1998 is hereby **VACATED**.

As to the Petition to Make Special filed 01 March 2000, such petitions are decided by the Special Program Examiners in the Patent Technology Centers. MPEP § 1002.02(s). The application will be forwarded to a Special Program Examiner after receipt in the appropriate Technology Center.

---

[1]As noted in 37 CFR 1.8(a)(2)(i)(A), the Certificate of Mailing procedure does not apply to the filing of a patent application specification for the purpose of obtaining an application filing date. Thus, the filing date is the date of receipt (14 September 1998) in the PTO rather than the date certified in the Certificate of Mailing (09 September 1998).

If reconsideration on the merits of this petition is desired, a proper reply must be filed within TWO (2) MONTHS form the mail date of this decision. Any reconsideration request should include a cover letter entitled "Renewed Petition Under 37 CFR 1.181." No additional petition fee is required. Extensions of time may be obtained under 37 CFR 1.136(a).

Alternatively, applicants may wish to consider filing a petition under 37 CFR 1.137 to revive the international application as being unintentionally abandoned in order to establish copendency. In this instance, applicants may either claim 35 U.S.C. 120 benefit in the above-identified application to the PCT application or may instead file another application under 35 U.S.C. 371. Such a petition should include a cover letter entitled "Petition Under 37 CFR 1.137".

The application will be forwarded to Office of Initial Patent Examination for processing as a regular national application under 35 U.S.C. 111(a) and for issuance of a new Filing Receipt with a filing date of **14 September 1998** in accordance with this Decision.

Daniel Stemmer
PCT Legal Examiner
PCT Legal Office
Telephone: (703) 308-2066
Facsimile: (703) 308-6459

Richard Cole
PCT Legal Examiner
PCT Legal Office

UNITED STATES DEPARTMENT OF COMMERCE
Patent and Trademark Office

Patent Cooperation Treaty Legal Office

Address: Assistant Commissioner for Patents
Box PCT
Washington, D.C. 20231

NOV 01 2000

Charles G. Nessler
P.O. Box H
Chester, CT 06412

In re Application of	:	DECISION ON
GOLICZ et al	:	
Application No.: 08/962,077	:	RENEWED PETITION
Filing Date: 14 September 1998	:	
Attorney Docket No.: 9534	:	UNDER 37 CFR 1.181
For: SHEET FEEDING APPARATUS	:	

This is in response to applicants' RENEWED PETITION UNDER 37 CFR 1.181 filed 10 May 2000.

BACKGROUND

On 01 April 1997, applicants filed international application No. PCT/US97/05320, which claims a priority date of 01 April 1996 and designated the United States. A copy of the international application was communicated to the United States Patent and Trademark Office (USPTO) from the International Bureau on 09 October 1997. The twenty-month deadline for entry into the national stage in the U.S. expired as of midnight of 01 December 1997.

On 31 October 1997, applicants filed in the United States Patent and Trademark Office, *inter alia*, a cover letter, a declaration and power of attorney, a small entity statement, a preliminary amendment, 8 sheets of formal drawings, and a check for $527. The cover letter states that "[t]his application is a continuation of [PCT/US97/05320]."

On 14 July 1998, the PTO mailed a NOTICE OF INCOMPLETE APPLICATION (Form PTO-1123) indicating that a filing date had not been assigned because the specification was missing.

On 14 September 1998, applicants submitted a TRANSMITTAL OF SPECIFICATION which was accompanied by the entire PCT application for PCT No. PCT/US97/05320. This TRANSMITTAL stated that this "same document was previously transmitted to the USPTO as designated office on behalf of the International Bureau of WIPO".

On 14 September 1998, applicants filed a PETITION RELATING TO FILING DATE pursuant to 37 CFR 1.181. The petition requested that: (1) the above mentioned application be granted a filing date of 31 October 1997 because the application was complete at that time "within the meaning of 35 U.S.C. 371"; (2) the above mentioned application be granted an effective filing date of 01 April 1997 under PCT Article 11(3), 35 U.S.C. 371, and 37 CFR 1.53(f); and (3) a refund of the petition fee because the application was complete as of 31 October 1997. The petition states that "[t]o commence the national stage, 35 U.S.C. 371(c)(2) says that a copy of the international application ought to be filed 'unless . . . already communicated by the International Bureau'."

Between 14 September 1998 and 21 September 1998, applicants received a Filing Receipt (Form PTO-103X) mailed by the PTO indicating the filing date of the above-mentioned application as 31 October 1997 and indicating that the application is a continuation of PCT/US97/05320 filed 01 April 1997.

On 21 September 1998, applicants filed a WITHDRAWAL OF PETITION RELATING TO FILING DATE (PETITION DATED SEPTEMBER 9, 1998) requesting withdrawal of the previously filed petition and a refund of the petition fee. The petition states that the Filing Receipt indicates a filing date of 31 October 1997 which is the date applicants petitioned for. This WITHDRAWAL was accompanied by a copy of the Filing Receipt.

On 04 June 1999, applicants filed a STATUS INQUIRY and a REQUEST FOR REFUND OF PETITION FEE.

On 30 March 2000, the USPTO mailed a decision (1) dismissing applicants' petition under 37 CFR 1.181 filed 14 September 1998, (2) dismissing applicants' request filed 21 September 1998 to withdraw the petition under 37 CFR 1.181, (3) dismissing applicants' request for refund filed 21 September 1998, and (4) vacating the filing receipt received by applicants between 14 September 1998 and 21 September 1998. The decision also indicated that the above-identified application would be treated under 35 U.S.C. 111 and be accorded a filing date of 14 September 1998.

On 10 May 2000, applicants submitted the instant RENEWED PETITION UNDER 37 CFR 1.181 requesting reconsideration of the decision mailed 31 August 2000. Specifically, applicants request that the application be accorded a filing date under 35 U.S.C. 111 of 31 October 1997 and that the declaration filed 31 October 1997 be accepted. Alternatively, applicants argue that the application was properly filed under 35 U.S.C. 371 on 31 October 1997.

On 15 June 2000, applicants submitted a communication noting a typographical error in the renewed petition filed 10 May 2000. The communication requested that "37 CFR 371" and "37 CFR 111" be considered as --35 U.S.C. 371-- and --35 U.S.C. 111--, respectively. The renewed petition has been considered in accordance with this request.

DISCUSSION

Applicants argue that the application should be accorded a filing date under 35 U.S.C. 111 of 31 October 1997 because (1) applicants submitted a cover letter stating that the application was a continuation of PCT/US97/05320 and a declaration identifying the specification executed as PCT/US97/05320, (2) the USPTO received a copy of PCT/US97/05320 on 09 October 1997, and (3) "the filing date of a continued prosecution application is the date on which the request is filed" as per 37 CFR 1.53(d)(2). However, the above-identified application is not a continued prosecution application under 37 CFR 1.53(d)(2). See 37 CFR 1.53(d)(1). Rather, it is a continuation application under 37 CFR 1.53(b).

Applicants also urge that the declaration filed 31 October 1997 properly identifies the specification. This argument is based on the last paragraph of MPEP § 1896 which states that the "specification may be identified in a U.S. national application filed under 35 U.S.C. 111(a) by reference to an attached specification or by reference to the application number and filing date of a specification previously filed in the Office." However, the declaration identifies an international application rather than "a specification previously filed in the Office." Note that the last paragraph of MPEP § 1896 goes on to state that a specification in a national stage application filed under 35 U.S.C. 371 may be identified "in the same manner as applications filed under 35 U.S.C. 111(a) or may identify the specification by reference to the application number and filing date of the international application." By implication then, an international application is not considered a "specification previously filed in the Office."

Applicants also contend, assuming *arguendo* that the above-identified application is not accorded a filing date under 35 U.S.C. 111 of 31 October 1997, that the above-identified application was a proper filing under 35 U.S.C. 371. The previous decision stated:

> Any intended filing of an international application as a national stage application must clearly and unambiguously be identified as such and must satisfy all of the conditions set forth in 35 U.S.C. 371(c). The official PTO Notice published in the Official Gazette at 1077 OG 13 entitled "Minimum Requirements for Acceptance of Applications Under 35 U.S.C. 371 (the National Stage of PCT)" states, in part, the following:
>
> > The Patent and Trademark Office is continuing to receive application papers which do not clearly identify whether the papers (1) are being submitted to enter the national stage of the Patent Cooperation Treaty (PCT) under 35 U.S.C. 371 or (2) are being filed as a regular national application under 35 U.S.C. 111.
> >
> > * * *
> >
> > If there are any conflicting instructions as to which sections of the statute (371 or 111) is intended the application will be accepted under 35 U.S.C. 111.
>
> In the present application, the submission filed 31 October 1997 contained no

> indication that the application was being submitted under 35 U.S.C. 371. The cover letter stated that the application was a *continuation* of PCT/US97/05320 indicating that applicants intended to claim benefit under 35 U.S.C. 120. Such benefit cannot be claimed in an application filed under 35 U.S.C. 371. Moreover, Section 371 of the statute was not mentioned in any of the papers filed in this application until the petition filed 14 September 1998. Accordingly, the application will be treated as filed under 35 U.S.C. 111.

Applicants urge that the use of the word "continuation" in the cover letter is "clearly subordinate and outweighed by the prima facie instruction and all the other implied instructions and supporting evidence for a [35 U.S.C.] 371 filing [and that] [t]hus there is no conflicting instruction." The "prima facie instruction" referred to is the declaration filed on 31 October 1997 which identifies a particular international application by PCT Application Number and International filing date. Although this declaration does execute the international application, and thus could be viewed as an instruction to process the application under 35 U.S.C. 371, the cover letter, as discussed above, contains conflicting instructions to process the application under 35 U.S.C. 111(a). Note that the Official Gazette Notice refers to "any conflicting instruction" rather than to a preponderance of the evidence.

The specification filed on 14 September 1998 meets the requirements for granting a filing date for a filing under 35 U.S.C. 111(a). However, the declaration filed 31 October 1997 is defective in that it fails to properly identify the specification to which it is directed, as required under 37 CFR 1.63(a)(2). The declaration identifies the international application, which is improper in an application filed under 35 U.S.C. 111. See MPEP § 1896.

Applicants are not entitled to claim benefit under 35 U.S.C. 120 and 365(c) of the filing date of the international application for the common subject matter, since this application (Application No. 08/962,077) and the international application (PCT/US97/05320) designating the United States were not copending on 14 September 1998. Applicants may wish to consider filing a petition to revive the international application for the purposes of establishing copendency.

CONCLUSION

For the reasons set forth above, the renewed petition under 37 CFR 1.181 is **DISMISSED**.

If reconsideration on the merits of this petition is desired, a proper reply must be filed within TWO (2) MONTHS form the mail date of this decision. Any reconsideration request should include a cover letter entitled "Renewed Petition Under 37 CFR 1.181." No additional petition fee is required. Extensions of time may be obtained under 37 CFR 1.136(a).

Alternatively, applicants may wish to consider filing a petition under 37 CFR 1.137 to revive the international application as being unintentionally abandoned in order to establish

copendency. In this instance, applicants may either claim 35 U.S.C. 120 benefit in the above-identified application to the PCT application or may instead file another application under 35 U.S.C. 371. Such a petition should include a cover letter entitled "Petition Under 37 CFR 1.137".

The application will be forwarded to Office of Initial Patent Examination for processing as a regular national application under 35 U.S.C. 111(a) and for issuance of a new Filing Receipt with a filing date of **14 September 1998** in accordance with this Decision.

Daniel Stemmer
PCT Legal Examiner
PCT Legal Office
Telephone: (703) 308-2066
Facsimile: (703) 308-6459

Richard Cole
PCT Legal Examiner
PCT Legal Office

FEB 0 2 200

UNITED STATES PATENT AND TRADEMARK OFFICE

COMMISSIONER FOR PATENTS
UNITED STATES PATENT AND TRADEMARK OFFICE
WASHINGTON, D.C. 20231
www.uspto.gov

Charles G. Nessler
P.O. Box H
Chester, CT 06412

47

In re Application of	:	DECISION ON
GOLICZ et al	:	
Application No.: 08/962,077	:	PETITION UNDER
Filing Date: 14 September 1998	:	
Attorney Docket No.: 9534	:	37 CFR 1.137(b)
For: SHEET FEEDING APPARATUS	:	

This decision is in response to the petition entitled "PETITION FOR REVIVAL OF AN INTERNATIONAL APPLICATION FOR PATENT DESIGNATING THE U.S. ABANDONED UNINTENTIONALLY UNDER 37 CFR 1.137(b)" filed 04 January 2001.

BACKGROUND

On 01 April 1997, applicants filed international application No. PCT/US97/05320, which claims a priority date of 01 April 1996 and designated the United States. A copy of the international application was communicated to the United States Patent and Trademark Office (USPTO) from the International Bureau on 09 October 1997. The twenty-month deadline for entry into the national stage in the U.S. expired as of midnight of 01 December 1997.

On 31 October 1997, applicants filed in the United States Patent and Trademark Office, *inter alia*, a cover letter, a declaration and power of attorney, a small entity statement, a preliminary amendment, 8 sheets of formal drawings, and a check for $527. The cover letter states that "[t]his application is a continuation of [PCT/US97/05320]."

On 14 July 1998, the PTO mailed a NOTICE OF INCOMPLETE APPLICATION (Form PTO-1123) indicating that a filing date had not been assigned because the specification was missing.

On 14 September 1998, applicants submitted a TRANSMITTAL OF SPECIFICATION which was accompanied by the entire PCT application for PCT No. PCT/US97/05320. This TRANSMITTAL stated that this "same document was previously transmitted to the USPTO as designated office on behalf of the International Bureau of WIPO".

On 14 September 1998, applicants filed a PETITION RELATING TO FILING DATE pursuant to 37 CFR 1.181. The petition requested that: (1) the above mentioned application be

granted a filing date of 31 October 1997 because the application was complete at that time "within the meaning of 35 U.S.C. 371"; (2) the above mentioned application be granted an effective filing date of 01 April 1997 under PCT Article 11(3), 35 U.S.C. 371, and 37 CFR 1.53(f); and (3) a refund of the petition fee because the application was complete as of 31 October 1997. The petition states that "[t]o commence the national stage, 35 U.S.C. 371(c)(2) says that a copy of the international application ought to be filed 'unless . . . already communicated by the International Bureau'."

Between 14 September 1998 and 21 September 1998, applicants received a Filing Receipt (Form PTO-103X) mailed by the PTO indicating the filing date of the above-mentioned application as 31 October 1997 and indicating that the application is a continuation of PCT/US97/05320 filed 01 April 1997.

On 21 September 1998, applicants filed a WITHDRAWAL OF PETITION RELATING TO FILING DATE (PETITION DATED SEPTEMBER 9, 1998) requesting withdrawal of the previously filed petition and a refund of the petition fee. The petition states that the Filing Receipt indicates a filing date of 31 October 1997 which is the date applicants petitioned for. This WITHDRAWAL was accompanied by a copy of the Filing Receipt.

On 04 June 1999, applicants filed a STATUS INQUIRY and a REQUEST FOR REFUND OF PETITION FEE.

On 30 March 2000, the USPTO mailed a decision (1) dismissing applicants' petition under 37 CFR 1.181 filed 14 September 1998, (2) dismissing applicants' request filed 21 September 1998 to withdraw the petition under 37 CFR 1.181, (3) dismissing applicants' request for refund filed 21 September 1998, and (4) vacating the filing receipt received by applicants between 14 September 1998 and 21 September 1998. The decision also indicated that the above-identified application would be treated under 35 U.S.C. 111 and be accorded a filing date of 14 September 1998.

On 10 May 2000, applicants submitted a RENEWED PETITION UNDER 37 CFR 1.181 requesting reconsideration of the decision mailed 31 August 2000. Specifically, applicants requested that the application be accorded a filing date under 35 U.S.C. 111 of 31 October 1997 and that the declaration filed 31 October 1997 be accepted. Alternatively, applicants argued that the application was properly filed under 35 U.S.C. 371 on 31 October 1997.

On 01 November 2000, the USPTO mailed a decision dismissing applicants' renewed petition under 37 CFR 1.181. The decision also noted that applicants could file a petition under 37 CFR 1.137 to revive the international application as being unintentionally abandoned in order to establish copendency. It was further noted that if this course of action were taken, applicants could either claim 35 U.S.C. 120 benefit in the above-identified application to the PCT application or could instead file another application under 35 U.S.C. 371.

On 04 January 2001, applicants submitted the instant "PETITION FOR REVIVAL OF AN INTERNATIONAL APPLICATION FOR PATENT DESIGNATING THE U.S. ABANDONED UNINTENTIONALLY UNDER 37 CFR 1.137(b)" along with a preliminary amendment which amends the specification to include a specific reference claiming benefit under 35 U.S.C. 120 to the international application.

DISCUSSION

A petition to revive the present application under 37 CFR 1.137(b) must include:

(1) The required reply;
(2) The petition fee;
(3) A statement that the entire delay in filing the required reply from the due date for the reply until the filing of a grantable petition was unintentional.

As to item (1), the filing of the present continuing application under 35 U.S.C. 111(a) on 14 September 1998 is accepted as an appropriate response under 37 CFR 1.137(b).

As to item (2), the requisite petition fee of $620.00 was submitted on 04 January 2001.

With regard to item (3), petitioner's statement that "the entire delay in filing the required reply from the due date for the required reply until the filing of a grantable petition under 37 CFR 1.137 was unintentional" satisfies this requirement.

CONCLUSION

The petition under 37 CFR 1.137(b) to revive international application PCT/US97/05320 is hereby **GRANTED** as to the National stage in the United States of America for purposes of continuity only and since continuity has been established by this decision reviving the international application, the international application is again abandoned in favor of the present continuing application number 08/962,077.

This application is being forwarded to the Office of Initial Patent Examination for processing as a regular national application under 35 U.S.C. 111(a) and for issuance of a new Filing Receipt with a filing date of **14 September 1998** and indicating that the present application is a continuation of PCT/US97/05320, filed 01 April 1997.

Daniel Stemmer
Legal Examiner
PCT Legal Office

Boris Milef
Legal Examiner
PCT Legal Office

Telephone: (703) 308-2066; Facsimile: (703) 308-6459

AUG 1 5 2001

UNITED STATES PATENT & TRADEMARK OFFICE

UNDER SECRETARY OF COMMERCE FOR INTELLECTUAL PROPERTY AND DIRECTOR OF THE UNITED STATES PATENT AND TRADEMARK OFFICE
Washington, D.C. 20231

#14 DW

Charles G. Nessler
P.O. Box H
Chester, CT 06412

MAILED

AUG 1 5 2001

Office of the Director
Group 3600

In re Application of
Roman Golicz et al.
SERIAL NO: 08/962,077
FILED: October 31, 1997
FOR: Sheet Feeding Apparatus

DECISION ON PETITION TO MAKE APPLICATION SPECIAL (AGE)

This is a decision on your petition submitted on August 6, 2001 to make the above referenced application special on the basis that applicant is over 65 years of age.

The petition has been found to comply with all requirements of section 708.02, part IV of the Manual of Patent Examining Procedures, and will be GRANTED for that reason.

The Examiner is directed (1) to make an interference search for possible interfering applications, (2) to promptly examine this application out of turn, and (3) if any interfering application is discovered, to examine such application simultaneously and state in the first official letter of such application that it is being taken out of turn because of a possible interference.

Petitioner is advised that this application will continue to be special, throughout its entire prosecution and pendency, including interference or appeal, if any, only if Petitioner makes a prompt bona fide effort, in response to each office action, to place the application in condition for allowance, even if it is necessary to conduct an interview with the Examiner to accomplish this purpose.

The application is being forwarded to the examiner for accelerated examination consistent with the provisions of section 708.02 of the MPEP.

Steven N. Meyers
Special Programs Examiner
Technology Center 3600
(703)308-3868
dw/sm: 8/14/01

UNITED STATES PATENT AND TRADEMARK OFFICE

COMMISSIONER FOR PATENTS
UNITED STATES PATENT AND TRADEMARK OFFICE
WASHINGTON, D.C. 20231
www.uspto.gov

Paper No. 25

COPY MAILED
OCT 1 0 2002
OFFICE OF PETITIONS

Charles G. Nessler
P.O. Box H
Chester, CT 06412

In re Application of :
Roman M. Golicz, et al. :
Application No. 08/962,077 : ON PETITION
Filed: September 14, 1998 :
Attorney Docket No. 9534 :

This is a decision on the petition under 37 CFR 1.137(b), filed September 9, 2002, to revive the above-identified application.

The petition is **GRANTED**.

The above-identified application became abandoned for failure to reply in a timely manner to the non-final Office action mailed December 3, 2001, which set a shortened statutory period for reply of three (3) months. No extensions of time under the provisions of 37 CFR 1.136(a) were obtained. Accordingly, the above-identified application became abandoned on March 4, 2002.

Telephone inquiries concerning this decision should be directed to Cheryl Gibson-Baylor at (703)308-5111, or in her absence, Sherry Brinkley at (703)305-9220.

The application file is being forwarded to Technology Center 3600, Art Unit 3651.

Cheryl Gibson Baylor

Cheryl Gibson-Baylor
Petitions Examiner
Office of Petitions
Office of the Deputy Commissioner
for Patent Examination Policy

Karen Creasy for

Sherry Brinkley
Petitions Examiner

UNITED STATES PATENT AND TRADEMARK OFFICE

Commissioner for Patents
United States Patent and Trademark Office
P.O. Box 1450
Alexandria, VA 22313-1450
www.uspto.gov

In re Patent No. 5791693
Issue Date: August 11,1998
Application No. 08962182
Filed: October 31,1997
Attorney Docket No. 63-11894A

:
:DECISION GRANTING PETITION
:UNDER 37 CFR 1.378(c)
:

This is a decision on the electronic petition, filed November 17,2006 ,under 37 CFR 1.378(c) to accept the unintentionally delayed payment of the 7.5 year maintenance fee for the above-identified patent.

The petition is GRANTED.

The maintenance fee is accepted, and the above-identified patent reinstated as of November 17,2006. This decision also constitutes notice that the fee has been accepted. An electronic copy of the petition and this decision has been created as an entry in an Image File Wrapper. Nevertheless, petitioner should print and retain an independent copy

Telephone inquires related to this electronic decision should be directed to the Electronic Business Center at 1-866-217-9197.

Under the Paperwork Reduction Act of 1995, no persons are required to respond to a collection of information unless it displays valid OMB control number.

PETITION TO ACCEPT UNINTENTIONALLY DELAYED PAYMENT OF MAINTENANCE FEE IN AN EXPIRED PATENT (37 CFR 1.378(c))

Patent Number	Issue Date (YYYY-MM-DD)	Application Number	Filing Date (YYYY-MM-DD)	Docket Number (if applicable)
5791693	1998-08-11	08962182	1997-10-31	63-11894A

CAUTION: Maintenance fee (and surcharge, if any) payment must correctly identify: (1) the patent number and (2) the application number of the actual U.S. application leading to issuance of that patent to ensure the fee(s) is/are associated with the correct patent. 37 CFR 1.366(c) and (d).

SMALL ENTITY
☐ Patentee claims, or has previously claimed, small entity status. See 37 CFR 1.27.

LOSS OF ENTITLEMENT TO SMALL ENTITY STATUS
☐ Patentee is no longer entitled to small entity status. See 37 CFR 1.27(g)

NOT Small Entity		Small Entity	
Fee	Code	Fee	Code
○ 3 ½ year	(1551)	○ 3 ½ year	(2551)
◉ 7 ½ year	(1552)	○ 7 ½ year	(2552)
○ 11 ½ year	(1553)	○ 11 ½ year	(2553)

SURCHARGE
The surcharge required by 37 CFR 1.20(i)(2) (Fee Code 1558) must be paid as a condition of accepting unintentionally delayed payment of the maintenance fee.

MAINTENANCE FEE (37 CFR 1.20(e)-(g))
The appropriate maintenance fee must be submitted with this petition.

STATEMENT
THE UNDERSIGNED CERTIFIES THAT THE DELAY IN PAYMENT OF THE MAINTENANCE FEE TO THIS PATENT WAS UNINTENTIONAL

PETITIONER(S) REQUEST THAT THE DELAYED PAYMENT OF THE MAINTENANCE FEE BE ACCEPTED AND THE PATENT REINSTATED

THIS PORTION MUST BE COMPLETED BY THE SIGNATORY OR SIGNATORIES

37 CFR 1.378(d) states: "Any petition under this section must be signed by an attorney or agent registered to practice before the Patent and Trademark Office, or by the patentee, the assignee, or other party in interest."

I certify, in accordance with 37 CFR 1.4(d)(4) that I am

◉ An attorney or agent registered to practice before the Patent and Trademark Office

○ A sole patentee

○ A joint patentee; I certify that I am authorized to sign this submission on behalf of all the other patentees.

○ A joint patentee; all of whom are signing this e-petition

○ The assignee of record of the entire interest

Patent Practitioner			
A signature of the applicant or representative is required in accordance with 37 CFR 1.33 and 10.18. Please see 37 CFR 1.4(d) for the form of the signature			
Signature	/Mark T. Garrett/	Date (YYYY-MM-DD)	2006-11-17
Name	Mark T. Garrett	Registration Number	44699

This collection of information is required by 37 CFR 1.378(c). The information is required to obtain or retain a benefit by the public which is to file (and by the USPTO to process) an application. Confidentiality is governed by 35 U.S.C. 122 and 37 CFR 1.11 and 1.14. This collection is estimated to take 1 hour to complete, including gathering, preparing, and submitting the completed application form to the USPTO. Time will vary depending upon the individual case. Any comments on the amount of time you require to complete this form and/ or suggestions for reducing this burden, should be sent to the Chief Information Officer, U.S. Patent and Trademark Office, U.S. Department of Commerce, P.O. Box 1450, Alexandria, VA 22313-1450. DO NOT SEND FEES OR COMPLETED FORMS TO THIS ADDRESS. **This form can only be used when in conjunction with EFS-Web. If this form is mailed to the USPTO, it may cause delays in reinstating the patent.**

Privacy Act Statement

The Privacy Act of 1974 (P.L. 93-579) requires that you be given certain information in connection with your submission of the attached form related to a patent application or patent. Accordingly, pursuant to the requirements of the Act, please be advised that: (1) the general authority for the collection of this information is 35 U.S.C. 2(b)(2); (2) furnishing of the information solicited is voluntary; and (3) the principal purpose for which the information is used by the U.S. Patent and Trademark Office is to process and/or examine your submission related to a patent application or patent. If you do not furnish the requested information, the U.S. Patent and Trademark Office may not be able to process and/or examine your submission, which may result in termination of proceedings or abandonment of the application or expiration of the patent.

The information provided by you in this form will be subject to the following routine uses:

1. The information on this form will be treated confidentially to the extent allowed under the Freedom of Information Act (5 U.S.C. 552) and the Privacy Act (5 U.S.C. 552a). Records from this system of records may be disclosed to the Department of Justice to determine whether the Freedom of Information Act requires disclosure of these record s.

2. A record from this system of records may be disclosed, as a routine use, in the course of presenting evidence to a court, magistrate, or administrative tribunal, including disclosures to opposing counsel in the course of settlement negotiations.

3. A record in this system of records may be disclosed, as a routine use, to a Member of Congress submitting a request involving an individual, to whom the record pertains, when the individual has requested assistance from the Member with respect to the subject matter of the record.

4. A record in this system of records may be disclosed, as a routine use, to a contractor of the Agency having need for the information in order to perform a contract. Recipients of information shall be required to comply with the requirements of the Privacy Act of 1974, as amended, pursuant to 5 U.S.C. 552a(m).

5. A record related to an International Application filed under the Patent Cooperation Treaty in this system of records may be disclosed, as a routine use, to the International Bureau of the World Intellectual Property Organization, pursuant to the Patent Cooperation Treaty.

6. A record in this system of records may be disclosed, as a routine use, to another federal agency for purposes of National Security review (35 U.S.C. 181) and for review pursuant to the Atomic Energy Act (42 U.S.C. 218(c)).

7. A record from this system of records may be disclosed, as a routine use, to the Administrator, General Services, or his/her designee, during an inspection of records conducted by GSA as part of that agency's responsibility to recommend improvements in records management practices and programs, under authority of 44 U.S.C. 2904 and 2906. Such disclosure shall be made in accordance with the GSA regulations governing inspection of records for this purpose, and any other relevant (i.e., GSA or Commerce) directive. Such disclosure shall not be used to make determinations about individuals.

8. A record from this system of records may be disclosed, as a routine use, to the public after either publication of the application pursuant to 35 U.S.C. 122(b) or issuance of a patent pursuant to 35 U.S.C. 151. Further, a record may be disclosed, subject to the limitations of 37 CFR 1.14, as a routine use, to the public if the record was filed in an application which became abandoned or in which the proceedings were terminated and which application is referenced by either a published application, an application open to public inspections or an issued patent.

9. A record from this system of records may be disclosed, as a routine use, to a Federal, State, or local law enforcement agency, if the USPTO becomes aware of a violation or potential violation of law or regulation.

UNITED STATES PATENT AND TRADEMARK OFFICE

Commissioner for Patents
United States Patent and Trademark Office
P.O. Box 1450
Alexandria, VA 22313-1450
www.uspto.gov

In re Patent No. 6442377
Issue Date: August 27,2002
Application No. 08962689
Filed: November 3,1997
Attorney Docket No. 026125-021

:
:DECISION GRANTING PETITION
:UNDER 37 CFR 1.378(c)
:

This is a decision on the electronic petition, filed January 30,2007 ,under 37 CFR 1.378(c) to accept the unintentionally delayed payment of the 3.5 year maintenance fee for the above-identified patent.

The petition is GRANTED.

The maintenance fee is accepted, and the above-identified patent reinstated as of January 30,2007 . This decision also constitutes notice that the fee has been accepted. An electronic copy of the petition and this decision has been created as an entry in an Image File Wrapper. Nevertheless, petitioner should print and retain an independent copy

Telephone inquires related to this electronic decision should be directed to the Electronic Business Center at 1-866-217-9197.

Approved for use through 04/30/2009. OMB 0651-0016
U.S. Patent and Trademark Office: U.S. DEPARTMENT OF COMMERCE
Under the Paperwork Reduction Act of 1995, no persons are required to respond to a collection of information unless it displays valid OMB control number.

PETITION TO ACCEPT UNINTENTIONALLY DELAYED PAYMENT OF MAINTENANCE FEE IN AN EXPIRED PATENT (37 CFR 1.378(c))

Patent Number	Issue Date (YYYY-MM-DD)	Application Number	Filing Date (YYYY-MM-DD)	Docket Number (if applicable)
6442377	2002-08-27	08962689	1997-11-03	P07420-US1

CAUTION: Maintenance fee (and surcharge, if any) payment must correctly identify: (1) the patent number and (2) the application number of the actual U.S. application leading to issuance of that patent to ensure the fee(s) is/are associated with the correct patent. 37 CFR 1.366(c) and (d).

SMALL ENTITY
☐ Patentee claims, or has previously claimed, small entity status. See 37 CFR 1.27.

LOSS OF ENTITLEMENT TO SMALL ENTITY STATUS
☐ Patentee is no longer entitled to small entity status. See 37 CFR 1.27(g)

NOT Small Entity		Small Entity	
Fee	Code	Fee	Code
◉ 3 ½ year	(1551)	○ 3 ½ year	(2551)
○ 7 ½ year	(1552)	○ 7 ½ year	(2552)
○ 11 ½ year	(1553)	○ 11 ½ year	(2553)

SURCHARGE
The surcharge required by 37 CFR 1.20(i)(2) (Fee Code 1558) must be paid as a condition of accepting unintentionally delayed payment of the maintenance fee.

MAINTENANCE FEE (37 CFR 1.20(e)-(g))
The appropriate maintenance fee must be submitted with this petition.

STATEMENT
THE UNDERSIGNED CERTIFIES THAT THE DELAY IN PAYMENT OF THE MAINTENANCE FEE TO THIS PATENT WAS UNINTENTIONAL

PETITIONER(S) REQUEST THAT THE DELAYED PAYMENT OF THE MAINTENANCE FEE BE ACCEPTED AND THE PATENT REINSTATED

THIS PORTION MUST BE COMPLETED BY THE SIGNATORY OR SIGNATORIES

37 CFR 1.378(d) states: "Any petition under this section must be signed by an attorney or agent registered to practice before the Patent and Trademark Office, or by the patentee, the assignee, or other party in interest."

I certify, in accordance with 37 CFR 1.4(d)(4) that I am

◉ An attorney or agent registered to practice before the Patent and Trademark Office

○ A sole patentee

○ A joint patentee; I certify that I am authorized to sign this submission on behalf of all the other patentees.

○ A joint patentee; all of whom are signing this e-petition

○ The assignee of record of the entire interest

Patent Practitioner			
A signature of the applicant or representative is required in accordance with 37 CFR 1.33 and 10.18. Please see 37 CFR 1.4(d) for the form of the signature			
Signature	/Michael Cameron, #50,298/	Date (YYYY-MM-DD)	2007-01-30
Name	Michael Cameron	Registration Number	50298

This collection of information is required by 37 CFR 1.378(c). The information is required to obtain or retain a benefit by the public which is to file (and by the USPTO to process) an application. Confidentiality is governed by 35 U.S.C. 122 and 37 CFR 1.11 and 1.14. This collection is estimated to take 1 hour to complete, including gathering, preparing, and submitting the completed application form to the USPTO. Time will vary depending upon the individual case. Any comments on the amount of time you require to complete this form and/ or suggestions for reducing this burden, should be sent to the Chief Information Officer, U.S. Patent and Trademark Office, U.S. Department of Commerce, P.O. Box 1450, Alexandria, VA 22313-1450. DO NOT SEND FEES OR COMPLETED FORMS TO THIS ADDRESS. **This form can only be used when in conjunction with EFS-Web. If this form is mailed to the USPTO, it may cause delays in reinstating the patent.**

Privacy Act Statement

The Privacy Act of 1974 (P.L. 93-579) requires that you be given certain information in connection with your submission of the attached form related to a patent application or patent. Accordingly, pursuant to the requirements of the Act, please be advised that: (1) the general authority for the collection of this information is 35 U.S.C. 2(b)(2); (2) furnishing of the information solicited is voluntary; and (3) the principal purpose for which the information is used by the U.S. Patent and Trademark Office is to process and/or examine your submission related to a patent application or patent. If you do not furnish the requested information, the U.S. Patent and Trademark Office may not be able to process and/or examine your submission, which may result in termination of proceedings or abandonment of the application or expiration of the patent.

The information provided by you in this form will be subject to the following routine uses:

1. The information on this form will be treated confidentially to the extent allowed under the Freedom of Information Act (5 U.S.C. 552) and the Privacy Act (5 U.S.C. 552a). Records from this system of records may be disclosed to the Department of Justice to determine whether the Freedom of Information Act requires disclosure of these record s.

2. A record from this system of records may be disclosed, as a routine use, in the course of presenting evidence to a court, magistrate, or administrative tribunal, including disclosures to opposing counsel in the course of settlement negotiations.

3. A record in this system of records may be disclosed, as a routine use, to a Member of Congress submitting a request involving an individual, to whom the record pertains, when the individual has requested assistance from the Member with respect to the subject matter of the record.

4. A record in this system of records may be disclosed, as a routine use, to a contractor of the Agency having need for the information in order to perform a contract. Recipients of information shall be required to comply with the requirements of the Privacy Act of 1974, as amended, pursuant to 5 U.S.C. 552a(m).

5. A record related to an International Application filed under the Patent Cooperation Treaty in this system of records may be disclosed, as a routine use, to the International Bureau of the World Intellectual Property Organization, pursuant to the Patent Cooperation Treaty.

6. A record in this system of records may be disclosed, as a routine use, to another federal agency for purposes of National Security review (35 U.S.C. 181) and for review pursuant to the Atomic Energy Act (42 U.S.C. 218(c)).

7. A record from this system of records may be disclosed, as a routine use, to the Administrator, General Services, or his/her designee, during an inspection of records conducted by GSA as part of that agency's responsibility to recommend improvements in records management practices and programs, under authority of 44 U.S.C. 2904 and 2906. Such disclosure shall be made in accordance with the GSA regulations governing inspection of records for this purpose, and any other relevant (i.e., GSA or Commerce) directive. Such disclosure shall not be used to make determinations about individuals.

8. A record from this system of records may be disclosed, as a routine use, to the public after either publication of the application pursuant to 35 U.S.C. 122(b) or issuance of a patent pursuant to 35 U.S.C. 151. Further, a record may be disclosed, subject to the limitations of 37 CFR 1.14, as a routine use, to the public if the record was filed in an application which became abandoned or in which the proceedings were terminated and which application is referenced by either a published application, an application open to public inspections or an issued patent.

9. A record from this system of records may be disclosed, as a routine use, to a Federal, State, or local law enforcement agency, if the USPTO becomes aware of a violation or potential violation of law or regulation.

SPE RESPONSE FOR CERTIFICATE OF CORRECTION

Paper No.: _____

DATE : L1509

TO SPE OF : ART UNIT 3714

SUBJECT : Request for Certificate of Correction for Appl. No.: 08/962971 Patent No.: RE40340

Please respond to this ~~request for a certificate of correction~~ within 7 days.

FOR IFW FILES: Should cofc be approved -

Please review the requested changes/corrections as shown in the **COCIN** document(s) in the IFW application image. No new matter should be introduced, nor should the scope or meaning of the claims be changed.

Please complete the response (see below) and forward the completed response to scanning using document code **COCX**.

FOR PAPER FILES:

Please review the requested changes/corrections as shown in the attached certificate of correction. Please complete this form (see below) and forward it with the file to:

Certificates of Correction Branch (CofC)
South Tower - 9A22
Palm Location 7580

Ennis Young
Certificates of Correction Branch
703-308-9390 ext. 117

Thank You For Your Assistance

The request for issuing the above-identified correction(s) is hereby:
Note your decision on the appropriate box.

- [x] **Approved** — All changes apply.
- [ ] **Approved in Part** — Specify below which changes **do not** apply.
- [ ] **Denied** — State the reasons for denial below.

Comments: _____

[signature]
SPE

3714
Art Unit

Please Enter D.G. 6/10/09

OIPE IAP9
AUG 1 4 2008
PATENT & TRADEMARK OFFICE

DR. NABIL N. GHALY
14 Longwood Drive
S. Huntington, NY 11746
(631) 549-0980

August 12, 2008

Attention Certificate Of Correction Branch
Commissioner of Patents
P.O. Box 1450
Alexandria, Virginia 22313-1450

Ref.: US Patent No. RE 40,340E – Issue Date May 27, 2008
Certificate Of Correction – Office Mistake

Dear Sir:

I am the inventor named in the subject patent. Attached, please find my request to issue a Certificate of Correction for the subject patent, pursuant to 35 USC 254.

Thank you for your cooperation and assistance in this matter.

Sincerely,

Dr. Nabil N. Ghaly

Attach.

Certified mail 7003 1010 0003 3624 4390
Return receipt requested

RECEIVED-USPTO
Patent Publication
AUG 1 9 2008

UNITED STATES PATENT AND TRADEMARK OFFICE

COMMISSIONER FOR PATENTS
UNITED STATES PATENT AND TRADEMARK OFFICE
P.O. BOX 1450
ALEXANDRIA, VA 22313-1450
WWW.USPTO.GOV

Paper No. 44

PERKINS COIE LLP
P.O. BOX 2168
MENLO PARK CA 94026

COPY MAILED

MAR 0 5 2004

OFFICE OF PETITIONS

In re Application of
Gough, et al.
Application No. 08/963,239
Filed: November 3, 1997
Attorney Docket No. 13724-787
For: MULTIPLE ANTENNA ABLATION APPARATUS AND METHOD

ON PETITION

This is a decision on the petition entitled, "Petition under 37 CFR 1.47(b)," filed July 21, 2003. The petition will be treated under (1) 37 CFR 1.47(a) to meet the requirement for submission of an oath or declaration under 37 CFR 1.63 executed by new inventor Edwards; (2) 37 CFR 1.183 as a request to waive 37 CFR 1.64, which requires each of the actual inventors to sign the declaration; and (3) 37 CFR 1.183 as a request for waiver of 37 CFR 1.48(a)(2), which requires new inventor Edwards to submit a lack of deceptive intent statement

The petition under 37 CFR 1.47(a) is **dismissed**.

The petition under 37 CFR 1.183 to waive 37 CFR 1.48(a)(2) is **dismissed**.

The petition under 37 CFR 1.183 to waive 37 CFR 1.64 is **dismissed**.

Any request for reconsideration of this decision must be submitted within TWO (2) MONTHS from the mail date of this decision. Extensions of time under 37 CFR 1.136(a) are permitted. FAILURE TO TIMELY RENEW THE PETITION WILL RESULT IN ABANDONMENT. The reconsideration request should include a cover letter entitled "Renewed Petitions under 37 CFR § § 1.183 and 1.47".

37 CFR 1.48(a) requires:

> (1) a request to correct the inventorship that sets forth the desired inventorship change;
>
> (2) a petition including a statement from each person being added and from each person being deleted as an inventor that the error occurred without deceptive intention on his or her part;
>
> (3) an oath or declaration by each actual inventor or inventors as required by 37 CFR 1.63 or as permitted by 37 CFR 1.42, 1.43 or 1.47;
>
> (4) the fee set forth in 37 CFR 1.17 (I); and
>
> (5) the written consent of any existing assignee, if any of the originally named inventors has executed an assignment;

This petition lacks (2) and (3) above.

It is logical to address (3) above first because (2) analysis flows from (3) analysis.

With respect to (3), 37 CFR 1.47 is available to meet the requirement for an oath or declaration under 37 CFR 1.63 when a new inventor (as opposed to an inventor who has already signed a declaration not listing the new inventor) refuses to cooperate. MPEP 201.03

A grantable petition under 37 CFR 1.47(a) requires

(A) a petition including proof of the pertinent facts establishing that the joint inventor(s) refuses to join, or cannot be found or reached after diligent effort,
(B) a proper oath or Declaration executed by the available joint inventor(s),
(C) the fee of $130 as specified in 37 CFR § 1.17(h), and
(D) the last known address of the omitted inventor(s).

This petition lacks items (A) and (B) above.

As to item (A), Applicant has failed to establish that the inventor has refused to sign the declaration. The proof of the pertinent events should be made by a statement of someone with first hand knowledge of the events. The Office requires that the non-signing inventor be provided with a complete copy of the application as filed. This includes the specification with claims, drawings, if any, and a declaration. See MPEP 409.03(d).

Petitioner has shown that Stuart D. Edwards, the inventor being added to the application, received a declaration and a Statement of Inventor Being Added on April 8, 2003. However, a copy of the application did **not** accompany the documents.

Mr. Edwards must have the complete application in his possession in order to make an informed decision as to whether he joins in its filing. Mr. Edwards cannot make the necessary statements found in the declaration-- i.e. "I have reviewed and understand..." -- without having examined the patent application.

Petitioner must send Mr. Edwards a copy of the as filed above-identified application and request that the sign the declaration. When petitioner can show that Mr. Edwards was mailed or received the complete application and that he either refused to sign the declaration or would not respond to the request that he sign the declaration, petitioner will have satisfied this requirement.

As to item (B), a proper executed oath or declaration has not been presented. The declaration filed February 21, 2003 is not acceptable because it runs afoul of 37 CFR 1.64, which requires each actual inventor to execute the oath or declaration. The evidence presented lends itself to analysis under a 37 CFR 1.183 waiver of 37 CFR 1.64. The problem is that <u>no one has signed the declaration</u>. In this rather unusual situation where no inventor will sign a second declaration, the Office would like a properly empowered representative of the partial assignee to sign the declaration.

The Office requires submission of a newly executed declaration with the signer's name and title listed thereon in addition to the information pertaining to the inventors. As stated in the MPEP 409.03(b), where an oath is signed by a registered attorney on behalf of a corporation, either proof of the attorney's authority in the form of a statement signed by an appropriate corporate officer must be submitted, or the attorney may simply state that he is authorized to sign on behalf of the corporation.

The petition under 37 CFR 1.47(a) with respect to Mr. Edward's refusal to cooperate and his lack of execution of the declaration is **dismissed**.

The petition under 37 CFR 1.183 to waive 37 CFR 1.64, which requires each actual inventor to execute the oath or declaration is **dismissed**.

With respect to (2), the petition under 37 CFR 1.183 to waive 37 CFR 1.48(a)(2) is **dismissed** because Mr. Edwards cannot state his lack of deceptive intent if he is not aware of the contents of the application. When petitioner can show that Mr. Edwards was mailed or received the complete application and that he either refused to sign the Statement of Inventor Being Added or would not respond to the request that he sign the Statement of Inventor Being Added, petitioner will have satisfied this requirement.

Regarding finance, petitioner has paid one $130 petition fee. Petitioner owes a $130 petition fee for the petition under 37 CFR 1.47(a), a $130 petition fee for the petition under 37 CFR 1.183 to waive 37 CFR 1.48(a)(2), and a $130 petition fee for the petition under 37 CFR 1.183 to waive 37 CFR 1.64. Pursuant to petitioner's authorization, deposit account no. 50-2207 will be charged two additional $130 petition fees.

Further correspondence with respect to this matter should be addressed as follows:

By mail: Mail Stop PETITION
Commissioner for Patents
Post Office Box 1450
Alexandria, VA 22313-1450

By FAX: (703) 308-6916
Attn: Office of Petitions

By hand: Crystal Plaza Four, Suite 3C23
2201 S. Clark Place
Arlington, VA

Telephone inquiries related to this decision should be directed to Senior Petitions Attorney E. Shirene Willis at (703) 308-6712.

Brian Hearn
Special Projects Examiner
Office of Petitions

UNITED STATES PATENT AND TRADEMARK OFFICE

Commissioner for Patents
United States Patent and Trademark Office
P.O. Box 1450
Alexandria, VA 22313-1450
www.uspto.gov

Paper No. 48

PERKINS COIE LLP
P.O. BOX 2168
MENLO PARK CA 94026

COPY MAILED

JUN 0 2 2004

OFFICE OF PETITIONS

In re Application of
Gough, et al.
Application No. 08/963,239
Filed: November 3, 1997
Attorney Docket No. 13724-787
For: MULTIPLE ANTENNA ABLATION APPARATUS AND METHOD

ON PETITION

This is a decision on the petition entitled, "Renewed Petition under 37 CFR 1.47(a) and Request for Reconsideration," filed May 5, 2004. The petition will be treated under (1) 37 CFR 1.183 as a request to waive 37 CFR 1.64 and 1.67, which require each of the inventors to sign the declaration; (2) 37 CFR 1.48 to change the inventive entity; and (3) 37 CFR 1.183 as a request for waiver of 37 CFR 1.48(a)(3), which requires an executed oath or declaration by the actual inventors.

The petition under 37 CFR 1.183 to waive 37 CFR 1.48(a)(3) is **granted**.

The petition under 37 CFR 1.183 to waive 37 CFR 1.64 and 1.67 is **granted**.

The petition under 37 CFR 1.48(a) is **granted**.

Edward J. Gough and Alan A. Stein were listed as co-inventors on the subject application as filed. A declaration executed by the two joint inventors was filed on April 6, 1998. Petitioner seeks to add Stuart D. Edwards as a third joint inventor.

37 CFR 1.48(a) requires:

> (1) a request to correct the inventorship that sets forth the desired inventorship change;
>
> (2) a petition including a statement from each person being added and from each person being deleted as an inventor that the error occurred without deceptive intention on his or her part;
>
> (3) an oath or declaration by each actual inventor or inventors as required by 37 CFR 1.63 or as permitted by 37 CFR 1.42, 1.43 or 1.47;
>
> (4) the fee set forth in 37 CFR 1.17 (I); and
>
> (5) the written consent of any existing assignee, if any of the originally named inventors has executed an assignment;

Petitioner has submitted a declaration listing all three joint inventors and their identifying information. Mr. Edwards, the to-be-added inventor, has signed the declaration and a statement of lack of deceptive intent. Petitioner has shown that the previously signing joint inventors, Gough and Stein, received copies of the amendments to the application and a new declaration, but each either expressly or constructively refused to sign the new declaration. Petitioner has submitted all required petition fees and the written assent of the assignee.

Petitioner has satisfied requirements (1),(2),(4), and (5) listed above.

With respect to (3), petitioner has demonstrated that Gough and Stein have refused to execute the supplemental declaration. It is agreed that, under the circumstances of this case, justice would be served by waiver of the rules where they require Gough's and Stein's signature on any supplemental declaration. Petitioner has shown (1) that this is an extraordinary situation where (2) justice requires waiver of the rule. *In re Sivertz*, 227 U.S.P.Q. 255, 256 (Comm'r Pat. 1985).

The petition under 37 CFR 1.183 to waive 37 CFR 1.48(a)(3) is **granted**. The petition under 37 CFR 1.183 requesting waiver of 37 CFR 1.64 and 1.67 is **granted**. The petition under 37 CFR 1.48 is **granted**.

Petitioner has shown that this nonprovisional application, as filed, through error and without deceptive intent, improperly set forth the inventorship, and, accordingly, this application has been corrected in compliance with 37 CFR 1.48(a). The inventorship of this application has been changed by the addition of Stuart D. Edwards as a joint inventor.

Please find enclosed a corrected filing receipt.

After the mailing of this decision, the application file will be returned to Technology Center 3700.

Telephone inquiries related to this decision should be directed to the undersigned at (703) 308-6712.

E Shirene Willis

E. Shirene Willis
Senior Petitions Attorney
Office of Petitions

enclosure: corrected filing receipt

UNITED STATES PATENT AND TRADEMARK OFFICE

Commissioner for Patents
United States Patent and Trademark Office
P.O. Box 1450
Alexandria, VA 22313-1450
www.uspto.gov

PERKINS COIE LLP
P.O. BOX 2168
MENLO PARK CA 94026

COPY MAILED

FEB 0 2 2006

OFFICE OF PETITIONS

In re Patent No. 6,958,062	:	
Issued: October 25, 2005	:	
Application No. 08/963,239	:	ON PETITION
Filed: November 3, 1997	:	
Attorney Docket No. 37167-8026 (13724-787)	:	

This is a notice regarding your request for acceptance of a fee deficiency submission under 37 CFR 1.28. On September 1, 1998, the Court of Appeals for the Federal Circuit held that 37 CFR 1.28(c) is the sole provision governing the time for correction of the erroneous payment of the issue fee as a small entity. **See DH Technology v. Synergystex International, Inc. 154 F.3d 1333, 47 USPQ2d 1865 (Fed. Cir. Sept. 1, 1998).**

The Office no longer investigates or rejects original or reissue applications under 37 CFR 1.56. **1098 Off. Gaz. Pat. Office 502 (January 3, 1989)**. Therefore, nothing in this Notice is intended to imply that an investigation was done.

Your fee deficiency submission under 37 CFR 1.28 is hereby **ACCEPTED**.

Inquiries related to this communication should be directed to the undersigned at (571) 272-3282.

Liana Chase
Petitions Examiner
Office of Petitions

Under the Paperwork Reduction Act of 1995, no persons are required to respond to a collection of information unless it displays valid OMB control number.

PETITION TO ACCEPT UNINTENTIONALLY DELAYED PAYMENT OF MAINTENANCE FEE IN AN EXPIRED PATENT (37 CFR 1.378(c))

Patent Number	Issue Date (YYYY-MM-DD)	Application Number	Filing Date (YYYY-MM-DD)	Docket Number (if applicable)
5923894	1999-07-13	08963346	1997-11-03	PAT 4409-2

CAUTION: Maintenance fee (and surcharge, if any) payment must correctly identify: (1) the patent number and (2) the application number of the actual U.S. application leading to issuance of that patent to ensure the fee(s) is/are associated with the correct patent. 37 CFR 1.366(c) and (d).

SMALL ENTITY
☐ Patentee claims, or has previously claimed, small entity status. See 37 CFR 1.27.

LOSS OF ENTITLEMENT TO SMALL ENTITY STATUS
☐ Patentee is no longer entitled to small entity status. See 37 CFR 1.27(g)

NOT Small Entity		Small Entity	
Fee	Code	Fee	Code
○ 3 ½ year	(1551)	○ 3 ½ year	(2551)
◉ 7 ½ year	(1552)	○ 7 ½ year	(2552)
○ 11 ½ year	(1553)	○ 11 ½ year	(2553)

SURCHARGE
The surcharge required by 37 CFR 1.20(i)(2) (Fee Code 1558) must be paid as a condition of accepting unintentionally delayed payment of the maintenance fee.

MAINTENANCE FEE (37 CFR 1.20(e)-(g))
The appropriate maintenance fee must be submitted with this petition.

STATEMENT
THE UNDERSIGNED CERTIFIES THAT THE DELAY IN PAYMENT OF THE MAINTENANCE FEE TO THIS PATENT WAS UNINTENTIONAL

PETITIONER(S) REQUEST THAT THE DELAYED PAYMENT OF THE MAINTENANCE FEE BE ACCEPTED AND THE PATENT REINSTATED

THIS PORTION MUST BE COMPLETED BY THE SIGNATORY OR SIGNATORIES

37 CFR 1.378(d) states: "Any petition under this section must be signed by an attorney or agent registered to practice before the Patent and Trademark Office, or by the patentee, the assignee, or other party in interest."

I certify, in accordance with 37 CFR 1.4(d)(4) that I am

◉ An attorney or agent registered to practice before the Patent and Trademark Office

○ A sole patentee

○ A joint patentee; I certify that I am authorized to sign this submission on behalf of all the other patentees.

○ A joint patentee; all of whom are signing this e-petition

○ The assignee of record of the entire interest

Patent Practitioner			
A signature of the applicant or representative is required in accordance with 37 CFR 1.33 and 10.18. Please see 37 CFR 1.4(d) for the form of the signature			
Signature	/Curtis B. Behmann/	Date (YYYY-MM-DD)	2007-10-09
Name	Curtis B. Behmann	Registration Number	52523

This collection of information is required by 37 CFR 1.378(c). The information is required to obtain or retain a benefit by the public which is to file (and by the USPTO to process) an application. Confidentiality is governed by 35 U.S.C. 122 and 37 CFR 1.11 and 1.14. This collection is estimated to take 1 hour to complete, including gathering, preparing, and submitting the completed application form to the USPTO. Time will vary depending upon the individual case. Any comments on the amount of time you require to complete this form and/ or suggestions for reducing this burden, should be sent to the Chief Information Officer, U.S. Patent and Trademark Office, U.S. Department of Commerce, P.O. Box 1450, Alexandria, VA 22313-1450. DO NOT SEND FEES OR COMPLETED FORMS TO THIS ADDRESS. **This form can only be used when in conjunction with EFS-Web. If this form is mailed to the USPTO, it may cause delays in reinstating the patent.**

Privacy Act Statement

The Privacy Act of 1974 (P.L. 93-579) requires that you be given certain information in connection with your submission of the attached form related to a patent application or patent. Accordingly, pursuant to the requirements of the Act, please be advised that: (1) the general authority for the collection of this information is 35 U.S.C. 2(b)(2); (2) furnishing of the information solicited is voluntary; and (3) the principal purpose for which the information is used by the U.S. Patent and Trademark Office is to process and/or examine your submission related to a patent application or patent. If you do not furnish the requested information, the U.S. Patent and Trademark Office may not be able to process and/or examine your submission, which may result in termination of proceedings or abandonment of the application or expiration of the patent.

The information provided by you in this form will be subject to the following routine uses:

1. The information on this form will be treated confidentially to the extent allowed under the Freedom of Information Act (5 U.S.C. 552) and the Privacy Act (5 U.S.C. 552a). Records from this system of records may be disclosed to the Department of Justice to determine whether the Freedom of Information Act requires disclosure of these record s.

2. A record from this system of records may be disclosed, as a routine use, in the course of presenting evidence to a court, magistrate, or administrative tribunal, including disclosures to opposing counsel in the course of settlement negotiations.

3. A record in this system of records may be disclosed, as a routine use, to a Member of Congress submitting a request involving an individual, to whom the record pertains, when the individual has requested assistance from the Member with respect to the subject matter of the record.

4. A record in this system of records may be disclosed, as a routine use, to a contractor of the Agency having need for the information in order to perform a contract. Recipients of information shall be required to comply with the requirements of the Privacy Act of 1974, as amended, pursuant to 5 U.S.C. 552a(m).

5. A record related to an International Application filed under the Patent Cooperation Treaty in this system of records may be disclosed, as a routine use, to the International Bureau of the World Intellectual Property Organization, pursuant to the Patent Cooperation Treaty.

6. A record in this system of records may be disclosed, as a routine use, to another federal agency for purposes of National Security review (35 U.S.C. 181) and for review pursuant to the Atomic Energy Act (42 U.S.C. 218(c)).

7. A record from this system of records may be disclosed, as a routine use, to the Administrator, General Services, or his/her designee, during an inspection of records conducted by GSA as part of that agency's responsibility to recommend improvements in records management practices and programs, under authority of 44 U.S.C. 2904 and 2906. Such disclosure shall be made in accordance with the GSA regulations governing inspection of records for this purpose, and any other relevant (i.e., GSA or Commerce) directive. Such disclosure shall not be used to make determinations about individuals.

8. A record from this system of records may be disclosed, as a routine use, to the public after either publication of the application pursuant to 35 U.S.C. 122(b) or issuance of a patent pursuant to 35 U.S.C. 151. Further, a record may be disclosed, subject to the limitations of 37 CFR 1.14, as a routine use, to the public if the record was filed in an application which became abandoned or in which the proceedings were terminated and which application is referenced by either a published application, an application open to public inspections or an issued patent.

9. A record from this system of records may be disclosed, as a routine use, to a Federal, State, or local law enforcement agency, if the USPTO becomes aware of a violation or potential violation of law or regulation.

UNITED STATES PATENT AND TRADEMARK OFFICE

Commissioner for Patents
United States Patent and Trademark Office
P.O. Box 1450
Alexandria, VA 22313-1450
www.uspto.gov

In re Patent No. 5923894
Issue Date: July 13,1999
Application No. 08963346
Filed: November 3,1997
Attorney Docket No. 003402.P004

:
:DECISION GRANTING PETITION
:UNDER 37 CFR 1.378(c)
:

This is a decision on the electronic petition, filed October 9,2007 ,under 37 CFR 1.378(c) to accept the unintentionally delayed payment of the 7.5 year maintenance fee for the above-identified patent.

The petition is GRANTED.

The maintenance fee is accepted, and the above-identified patent reinstated as of October 9,2007 . This decision also constitutes notice that the fee has been accepted. An electronic copy of the petition and this decision has been created as an entry in an Image File Wrapper. Nevertheless, petitioner should print and retain an independent copy

Telephone inquires related to this electronic decision should be directed to the Electronic Business Center at 1-866-217-9197.

Under the Paperwork Reduction Act of 1995, no persons are required to respond to a collection of information unless it displays valid OMB control number.

PETITION TO ACCEPT UNINTENTIONALLY DELAYED PAYMENT OF MAINTENANCE FEE IN AN EXPIRED PATENT (37 CFR 1.378(c))

Patent Number	Issue Date (YYYY-MM-DD)	Application Number	Filing Date (YYYY-MM-DD)	Docket Number (if applicable)
5940626	1999-08-17	08963387	1997-11-03	PAT 4410-2

CAUTION: Maintenance fee (and surcharge, if any) payment must correctly identify: (1) the patent number and (2) the application number of the actual U.S. application leading to issuance of that patent to ensure the fee(s) is/are associated with the correct patent. 37 CFR 1.366(c) and (d).

SMALL ENTITY
☐ Patentee claims, or has previously claimed, small entity status. See 37 CFR 1.27.

LOSS OF ENTITLEMENT TO SMALL ENTITY STATUS
☐ Patentee is no longer entitled to small entity status. See 37 CFR 1.27(g)

NOT Small Entity		Small Entity	
Fee	Code	Fee	Code
○ 3 ½ year	(1551)	○ 3 ½ year	(2551)
◉ 7 ½ year	(1552)	○ 7 ½ year	(2552)
○ 11 ½ year	(1553)	○ 11 ½ year	(2553)

SURCHARGE
The surcharge required by 37 CFR 1.20(i)(2) (Fee Code 1558) must be paid as a condition of accepting unintentionally delayed payment of the maintenance fee.

MAINTENANCE FEE (37 CFR 1.20(e)-(g))
The appropriate maintenance fee must be submitted with this petition.

STATEMENT
THE UNDERSIGNED CERTIFIES THAT THE DELAY IN PAYMENT OF THE MAINTENANCE FEE TO THIS PATENT WAS UNINTENTIONAL

PETITIONER(S) REQUEST THAT THE DELAYED PAYMENT OF THE MAINTENANCE FEE BE ACCEPTED AND THE PATENT REINSTATED

THIS PORTION MUST BE COMPLETED BY THE SIGNATORY OR SIGNATORIES

37 CFR 1.378(d) states: "Any petition under this section must be signed by an attorney or agent registered to practice before the Patent and Trademark Office, or by the patentee, the assignee, or other party in interest."

I certify, in accordance with 37 CFR 1.4(d)(4) that I am

◉ An attorney or agent registered to practice before the Patent and Trademark Office

○ A sole patentee

○ A joint patentee; I certify that I am authorized to sign this submission on behalf of all the other patentees.

○ A joint patentee; all of whom are signing this e-petition

○ The assignee of record of the entire interest

Patent Practitioner			
A signature of the applicant or representative is required in accordance with 37 CFR 1.33 and 10.18. Please see 37 CFR 1.4(d) for the form of the signature			
Signature	/Curtis B. Behmann/	Date (YYYY-MM-DD)	2007-10-09
Name	Curtis B. Behmann	Registration Number	52523

This collection of information is required by 37 CFR 1.378(c). The information is required to obtain or retain a benefit by the public which is to file (and by the USPTO to process) an application. Confidentiality is governed by 35 U.S.C. 122 and 37 CFR 1.11 and 1.14. This collection is estimated to take 1 hour to complete, including gathering, preparing, and submitting the completed application form to the USPTO. Time will vary depending upon the individual case. Any comments on the amount of time you require to complete this form and/ or suggestions for reducing this burden, should be sent to the Chief Information Officer, U.S. Patent and Trademark Office, U.S. Department of Commerce, P.O. Box 1450, Alexandria, VA 22313-1450. DO NOT SEND FEES OR COMPLETED FORMS TO THIS ADDRESS. **This form can only be used when in conjunction with EFS-Web. If this form is mailed to the USPTO, it may cause delays in reinstating the patent.**

Privacy Act Statement

The Privacy Act of 1974 (P.L. 93-579) requires that you be given certain information in connection with your submission of the attached form related to a patent application or patent. Accordingly, pursuant to the requirements of the Act, please be advised that: (1) the general authority for the collection of this information is 35 U.S.C. 2(b)(2); (2) furnishing of the information solicited is voluntary; and (3) the principal purpose for which the information is used by the U.S. Patent and Trademark Office is to process and/or examine your submission related to a patent application or patent. If you do not furnish the requested information, the U.S. Patent and Trademark Office may not be able to process and/or examine your submission, which may result in termination of proceedings or abandonment of the application or expiration of the patent.

The information provided by you in this form will be subject to the following routine uses:

1. The information on this form will be treated confidentially to the extent allowed under the Freedom of Information Act (5 U.S.C. 552) and the Privacy Act (5 U.S.C. 552a). Records from this system of records may be disclosed to the Department of Justice to determine whether the Freedom of Information Act requires disclosure of these record s.

2. A record from this system of records may be disclosed, as a routine use, in the course of presenting evidence to a court, magistrate, or administrative tribunal, including disclosures to opposing counsel in the course of settlement negotiations.

3. A record in this system of records may be disclosed, as a routine use, to a Member of Congress submitting a request involving an individual, to whom the record pertains, when the individual has requested assistance from the Member with respect to the subject matter of the record.

4. A record in this system of records may be disclosed, as a routine use, to a contractor of the Agency having need for the information in order to perform a contract. Recipients of information shall be required to comply with the requirements of the Privacy Act of 1974, as amended, pursuant to 5 U.S.C. 552a(m).

5. A record related to an International Application filed under the Patent Cooperation Treaty in this system of records may be disclosed, as a routine use, to the International Bureau of the World Intellectual Property Organization, pursuant to the Patent Cooperation Treaty.

6. A record in this system of records may be disclosed, as a routine use, to another federal agency for purposes of National Security review (35 U.S.C. 181) and for review pursuant to the Atomic Energy Act (42 U.S.C. 218(c)).

7. A record from this system of records may be disclosed, as a routine use, to the Administrator, General Services, or his/her designee, during an inspection of records conducted by GSA as part of that agency's responsibility to recommend improvements in records management practices and programs, under authority of 44 U.S.C. 2904 and 2906. Such disclosure shall be made in accordance with the GSA regulations governing inspection of records for this purpose, and any other relevant (i.e., GSA or Commerce) directive. Such disclosure shall not be used to make determinations about individuals.

8. A record from this system of records may be disclosed, as a routine use, to the public after either publication of the application pursuant to 35 U.S.C. 122(b) or issuance of a patent pursuant to 35 U.S.C. 151. Further, a record may be disclosed, subject to the limitations of 37 CFR 1.14, as a routine use, to the public if the record was filed in an application which became abandoned or in which the proceedings were terminated and which application is referenced by either a published application, an application open to public inspections or an issued patent.

9. A record from this system of records may be disclosed, as a routine use, to a Federal, State, or local law enforcement agency, if the USPTO becomes aware of a violation or potential violation of law or regulation.

UNITED STATES PATENT AND TRADEMARK OFFICE

Commissioner for Patents
United States Patent and Trademark Office
P.O. Box 1450
Alexandria, VA 22313-1450
www.uspto.gov

In re Patent No. 5940626
Issue Date: August 17,1999
Application No. 08963387
Filed: November 3,1997
Attorney Docket No. 003042.P002

:

:DECISION GRANTING PETITION
:UNDER 37 CFR 1.378(c)

:

This is a decision on the electronic petition, filed October 9,2007 ,under 37 CFR 1.378(c) to accept the unintentionally delayed payment of the 7.5 year maintenance fee for the above-identified patent.

The petition is GRANTED.

The maintenance fee is accepted, and the above-identified patent reinstated as of October 9,2007 . This decision also constitutes notice that the fee has been accepted. An electronic copy of the petition and this decision has been created as an entry in an Image File Wrapper. Nevertheless, petitioner should print and retain an independent copy

Telephone inquires related to this electronic decision should be directed to the Electronic Business Center at 1-866-217-9197.

Under the Paperwork Reduction Act of 1995, no persons are required to respond to a collection of information unless it displays valid OMB control number.

PETITION TO ACCEPT UNINTENTIONALLY DELAYED PAYMENT OF MAINTENANCE FEE IN AN EXPIRED PATENT (37 CFR 1.378(c))

Patent Number	Issue Date (YYYY-MM-DD)	Application Number	Filing Date (YYYY-MM-DD)	Docket Number (if applicable)
5954765	1999-09-21	08963561	1997-11-03	

CAUTION: Maintenance fee (and surcharge, if any) payment must correctly identify: (1) the patent number and (2) the application number of the actual U.S. application leading to issuance of that patent to ensure the fee(s) is/are associated with the correct patent. 37 CFR 1.366(c) and (d).

SMALL ENTITY
☒ Patentee claims, or has previously claimed, small entity status. See 37 CFR 1.27.

LOSS OF ENTITLEMENT TO SMALL ENTITY STATUS
☐ Patentee is no longer entitled to small entity status. See 37 CFR 1.27(g)

NOT Small Entity		Small Entity	
Fee	Code	Fee	Code
○ 3 ½ year	(1551)	○ 3 ½ year	(2551)
○ 7 ½ year	(1552)	◉ 7 ½ year	(2552)
○ 11 ½ year	(1553)	○ 11 ½ year	(2553)

SURCHARGE
The surcharge required by 37 CFR 1.20(i)(2) (Fee Code 1558) must be paid as a condition of accepting unintentionally delayed payment of the maintenance fee.

MAINTENANCE FEE (37 CFR 1.20(e)-(g))
The appropriate maintenance fee must be submitted with this petition.

STATEMENT
THE UNDERSIGNED CERTIFIES THAT THE DELAY IN PAYMENT OF THE MAINTENANCE FEE TO THIS PATENT WAS UNINTENTIONAL

PETITIONER(S) REQUEST THAT THE DELAYED PAYMENT OF THE MAINTENANCE FEE BE ACCEPTED AND THE PATENT REINSTATED

THIS PORTION MUST BE COMPLETED BY THE SIGNATORY OR SIGNATORIES

37 CFR 1.378(d) states: "Any petition under this section must be signed by an attorney or agent registered to practice before the Patent and Trademark Office, or by the patentee, the assignee, or other party in interest."

I certify, in accordance with 37 CFR 1.4(d)(4) that I am

◉ An attorney or agent registered to practice before the Patent and Trademark Office

○ A sole patentee

○ A joint patentee; I certify that I am authorized to sign this submission on behalf of all the other patentees.

○ A joint patentee; all of whom are signing this e-petition

○ The assignee of record of the entire interest

Patent Practitioner			
A signature of the applicant or representative is required in accordance with 37 CFR 1.33 and 10.18. Please see 37 CFR 1.4(d) for the form of the signature			
Signature	/Nicola A. Pisano/	Date (YYYY-MM-DD)	2009-01-30
Name	Nicola A. Pisano	Registration Number	34408

This collection of information is required by 37 CFR 1.378(c). The information is required to obtain or retain a benefit by the public which is to file (and by the USPTO to process) an application. Confidentiality is governed by 35 U.S.C. 122 and 37 CFR 1.11 and 1.14. This collection is estimated to take 1 hour to complete, including gathering, preparing, and submitting the completed application form to the USPTO. Time will vary depending upon the individual case. Any comments on the amount of time you require to complete this form and/ or suggestions for reducing this burden, should be sent to the Chief Information Officer, U.S. Patent and Trademark Office, U.S. Department of Commerce, P.O. Box 1450, Alexandria, VA 22313-1450. DO NOT SEND FEES OR COMPLETED FORMS TO THIS ADDRESS. **This form can only be used when in conjunction with EFS-Web. If this form is mailed to the USPTO, it may cause delays in reinstating the patent.**

Privacy Act Statement

The Privacy Act of 1974 (P.L. 93-579) requires that you be given certain information in connection with your submission of the attached form related to a patent application or patent. Accordingly, pursuant to the requirements of the Act, please be advised that: (1) the general authority for the collection of this information is 35 U.S.C. 2(b)(2); (2) furnishing of the information solicited is voluntary; and (3) the principal purpose for which the information is used by the U.S. Patent and Trademark Office is to process and/or examine your submission related to a patent application or patent. If you do not furnish the requested information, the U.S. Patent and Trademark Office may not be able to process and/or examine your submission, which may result in termination of proceedings or abandonment of the application or expiration of the patent.

The information provided by you in this form will be subject to the following routine uses:

1. The information on this form will be treated confidentially to the extent allowed under the Freedom of Information Act (5 U.S.C. 552) and the Privacy Act (5 U.S.C. 552a). Records from this system of records may be disclosed to the Department of Justice to determine whether the Freedom of Information Act requires disclosure of these record s.

2. A record from this system of records may be disclosed, as a routine use, in the course of presenting evidence to a court, magistrate, or administrative tribunal, including disclosures to opposing counsel in the course of settlement negotiations.

3. A record in this system of records may be disclosed, as a routine use, to a Member of Congress submitting a request involving an individual, to whom the record pertains, when the individual has requested assistance from the Member with respect to the subject matter of the record.

4. A record in this system of records may be disclosed, as a routine use, to a contractor of the Agency having need for the information in order to perform a contract. Recipients of information shall be required to comply with the requirements of the Privacy Act of 1974, as amended, pursuant to 5 U.S.C. 552a(m).

5. A record related to an International Application filed under the Patent Cooperation Treaty in this system of records may be disclosed, as a routine use, to the International Bureau of the World Intellectual Property Organization, pursuant to the Patent Cooperation Treaty.

6. A record in this system of records may be disclosed, as a routine use, to another federal agency for purposes of National Security review (35 U.S.C. 181) and for review pursuant to the Atomic Energy Act (42 U.S.C. 218(c)).

7. A record from this system of records may be disclosed, as a routine use, to the Administrator, General Services, or his/her designee, during an inspection of records conducted by GSA as part of that agency's responsibility to recommend improvements in records management practices and programs, under authority of 44 U.S.C. 2904 and 2906. Such disclosure shall be made in accordance with the GSA regulations governing inspection of records for this purpose, and any other relevant (i.e., GSA or Commerce) directive. Such disclosure shall not be used to make determinations about individuals.

8. A record from this system of records may be disclosed, as a routine use, to the public after either publication of the application pursuant to 35 U.S.C. 122(b) or issuance of a patent pursuant to 35 U.S.C. 151. Further, a record may be disclosed, subject to the limitations of 37 CFR 1.14, as a routine use, to the public if the record was filed in an application which became abandoned or in which the proceedings were terminated and which application is referenced by either a published application, an application open to public inspections or an issued patent.

9. A record from this system of records may be disclosed, as a routine use, to a Federal, State, or local law enforcement agency, if the USPTO becomes aware of a violation or potential violation of law or regulation.

UNITED STATES PATENT AND TRADEMARK OFFICE

Commissioner for Patents
United States Patent and Trademark Office
P.O. Box 1450
Alexandria, VA 22313-1450
www.uspto.gov

In re Patent No. 5954765
Issue Date: September 21,1999
Application No. 08963561
Filed: November 3,1997
Attorney Docket No. CER-004

:
:DECISION GRANTING PETITION
:UNDER 37 CFR 1.378(c)
:

This is a decision on the electronic petition, filed January 30,2009 ,under 37 CFR 1.378(c) to accept the unintentionally delayed payment of the 7.5 year maintenance fee for the above-identified patent.

The petition is **GRANTED**.

The maintenance fee is accepted, and the above-identified patent reinstated as of January 30,2009 . This decision also constitutes notice that the fee has been accepted. An electronic copy of the petition and this decision has been created as an entry in the Image File Wrapper. Nevertheless, petitioner should print and retain an independent copy.

Telephone inquiries related to this electronic decision should be directed to the Electronic Business Center at 1-866-217-9197.

UNITED STATES PATENT & TRADEMARK OFFICE
UNDER SECRETARY OF COMMERCE FOR INTELLECTUAL PROPERTY AND DIRECTOR OF THE UNITED STATES PATENT AND TRADEMARK OFFICE
Washington, D.C. 20231

MAILED

0 3 2001

GROUP 3600

#14

Richard L. Mayer
Kenyon and Kenyon
One Broadway
New York, New York 10004

In re Application of
Marko Maschek et al
Application No. 08/963,720
Filed: November 4, 1997
Attorney Docket No.: 10191/538
For: PROCESS FOR GENERATING COLLISON SIGNALS

DECISION ON PETITION TO WITHDRAW THE HOLDING OF ABANDONMENT

This is in response to applicants' request to withdraw the holding of abandonment, filed in the United States Patent and Trademark Office December 4, 2000.

The petition is **GRANTED**.

A review of the file record indicates that the application was held abandoned because the fee for filing the brief was not submitted and the extension of time period had expired.

Applicants' petition includes evidence of a timely filed response. However, a further review of the file record reveals that the original Appeal Brief and Extension of time are now present in the application file and the appropriate fees have been paid.

Since a timely response was filed, the holding of abandonment is withdrawn and the application will be forwarded via the Supervisory Legal Instruments Examiner to the Primary Examiner.

Gerald Goldberg

Gerald Goldberg, Director
Patent Technology Center 3600
(703) 308-1134
Facsimile No. (703) 308-2177

MJ:KD:12/26/00

KD

PTO/SB/66 (03-09)
Approved for use through 03/31/2012. OMB 0651-0016
U.S. Patent and Trademark Office: U.S. DEPARTMENT OF COMMERCE
Under the Paperwork Reduction Act of 1995, no persons are required to respond to a collection of information unless it displays valid OMB control number.

PETITION TO ACCEPT UNINTENTIONALLY DELAYED PAYMENT OF MAINTENANCE FEE IN AN EXPIRED PATENT (37 CFR 1.378(c))

Patent Number	Issue Date (YYYY-MM-DD)	Application Number	Filing Date (YYYY-MM-DD)	Docket Number (if applicable)
6151143	2000-11-21	08963789	1997-11-04	49238.0840

CAUTION: Maintenance fee (and surcharge, if any) payment must correctly identify: (1) the patent number and (2) the application number of the actual U.S. application leading to issuance of that patent to ensure the fee(s) is/are associated with the correct patent. 37 CFR 1.366(c) and (d).

SMALL ENTITY
☒ Patentee claims, or has previously claimed, small entity status. See 37 CFR 1.27.

LOSS OF ENTITLEMENT TO SMALL ENTITY STATUS
☐ Patentee is no longer entitled to small entity status. See 37 CFR 1.27(g)

NOT Small Entity		Small Entity	
Fee	Code	Fee	Code
○ 3 ½ year	(1551)	○ 3 ½ year	(2551)
○ 7 ½ year	(1552)	◉ 7 ½ year	(2552)
○ 11 ½ year	(1553)	○ 11 ½ year	(2553)

SURCHARGE
The surcharge required by 37 CFR 1.20(i)(2) (Fee Code 1558) must be paid as a condition of accepting unintentionally delayed payment of the maintenance fee.

MAINTENANCE FEE (37 CFR 1.20(e)-(g))
The appropriate maintenance fee must be submitted with this petition.

STATEMENT
THE UNDERSIGNED CERTIFIES THAT THE DELAY IN PAYMENT OF THE MAINTENANCE FEE TO THIS PATENT WAS UNINTENTIONAL

PETITIONER(S) REQUEST THAT THE DELAYED PAYMENT OF THE MAINTENANCE FEE BE ACCEPTED AND THE PATENT REINSTATED

THIS PORTION MUST BE COMPLETED BY THE SIGNATORY OR SIGNATORIES

37 CFR 1.378(d) states: "Any petition under this section must be signed by an attorney or agent registered to practice before the Patent and Trademark Office, or by the patentee, the assignee, or other party in interest."

I certify, in accordance with 37 CFR 1.4(d)(4) that I am

○ An attorney or agent registered to practice before the Patent and Trademark Office

○ A sole patentee

○ A joint patentee; I certify that I am authorized to sign this submission on behalf of all the other patentees.

○ A joint patentee; all of whom are signing this e-petition

◉ The assignee of record of the entire interest

The Assignee of record of the entire interest			
Under 37 CFR 3.71 an assignee becomes of record by filing a statement in compliance with 37 CFR 3.73(b). Signature requirements are set forth in 37 CFR 1.4(d), and the undersigned certifies that he / she is empowered to act on behalf of the assignee of the entire interest			
Signature	/Stephen J. Hart/	Date (YYYY-MM-DD)	2009-04-14
Name	Stephen J. Hart		
Enter Reel and Frame Number		Remove	
Reel Number	009876	Frame Number	0811
Enter Reel and Frame Number		Remove	
Reel Number	018934	Frame Number	0739
Enter Reel and Frame Number		Remove	
Reel Number	018934	Frame Number	0755
Click ADD for additional Reel Number and Frame Number		Add	

This collection of information is required by 37 CFR 1.378(c). The information is required to obtain or retain a benefit by the public which is to file (and by the USPTO to process) an application. Confidentiality is governed by 35 U.S.C. 122 and 37 CFR 1.11 and 1.14. This collection is estimated to take 1 hour to complete, including gathering, preparing, and submitting the completed application form to the USPTO. Time will vary depending upon the individual case. Any comments on the amount of time you require to complete this form and/ or suggestions for reducing this burden, should be sent to the Chief Information Officer, U.S. Patent and Trademark Office, U.S. Department of Commerce, P.O. Box 1450, Alexandria, VA 22313-1450. DO NOT SEND FEES OR COMPLETED FORMS TO THIS ADDRESS. **This form can only be used when in conjunction with EFS-Web. If this form is mailed to the USPTO, it may cause delays in reinstating the patent.**

Privacy Act Statement

The Privacy Act of 1974 (P.L. 93-579) requires that you be given certain information in connection with your submission of the attached form related to a patent application or patent. Accordingly, pursuant to the requirements of the Act, please be advised that: (1) the general authority for the collection of this information is 35 U.S.C. 2(b)(2); (2) furnishing of the information solicited is voluntary; and (3) the principal purpose for which the information is used by the U.S. Patent and Trademark Office is to process and/or examine your submission related to a patent application or patent. If you do not furnish the requested information, the U.S. Patent and Trademark Office may not be able to process and/or examine your submission, which may result in termination of proceedings or abandonment of the application or expiration of the patent.

The information provided by you in this form will be subject to the following routine uses:

1. The information on this form will be treated confidentially to the extent allowed under the Freedom of Information Act (5 U.S.C. 552) and the Privacy Act (5 U.S.C. 552a). Records from this system of records may be disclosed to the Department of Justice to determine whether the Freedom of Information Act requires disclosure of these records.

2. A record from this system of records may be disclosed, as a routine use, in the course of presenting evidence to a court, magistrate, or administrative tribunal, including disclosures to opposing counsel in the course of settlement negotiations.

3. A record in this system of records may be disclosed, as a routine use, to a Member of Congress submitting a request involving an individual, to whom the record pertains, when the individual has requested assistance from the Member with respect to the subject matter of the record.

4. A record in this system of records may be disclosed, as a routine use, to a contractor of the Agency having need for the information in order to perform a contract. Recipients of information shall be required to comply with the requirements of the Privacy Act of 1974, as amended, pursuant to 5 U.S.C. 552a(m).

5. A record related to an International Application filed under the Patent Cooperation Treaty in this system of records may be disclosed, as a routine use, to the International Bureau of the World Intellectual Property Organization, pursuant to the Patent Cooperation Treaty.

6. A record in this system of records may be disclosed, as a routine use, to another federal agency for purposes of National Security review (35 U.S.C. 181) and for review pursuant to the Atomic Energy Act (42 U.S.C. 218(c)).

7. A record from this system of records may be disclosed, as a routine use, to the Administrator, General Services, or his/her designee, during an inspection of records conducted by GSA as part of that agency's responsibility to recommend improvements in records management practices and programs, under authority of 44 U.S.C. 2904 and 2906. Such disclosure shall be made in accordance with the GSA regulations governing inspection of records for this purpose, and any other relevant (i.e., GSA or Commerce) directive. Such disclosure shall not be used to make determinations about individuals.

8. A record from this system of records may be disclosed, as a routine use, to the public after either publication of the application pursuant to 35 U.S.C. 122(b) or issuance of a patent pursuant to 35 U.S.C. 151. Further, a record may be disclosed, subject to the limitations of 37 CFR 1.14, as a routine use, to the public if the record was filed in an application which became abandoned or in which the proceedings were terminated and which application is referenced by either a published application, an application open to public inspections or an issued patent.

9. A record from this system of records may be disclosed, as a routine use, to a Federal, State, or local law enforcement agency, if the USPTO becomes aware of a violation or potential violation of law or regulation.

UNITED STATES PATENT AND TRADEMARK OFFICE

Commissioner for Patents
United States Patent and Trademark Office
P.O. Box 1450
Alexandria, VA 22313-1450
www.uspto.gov

In re Patent No. 6151143
Issue Date: November 21,2000
Application No. 08963789
Filed: November 4,1997
Attorney Docket No. 09981.0840

:
:DECISION GRANTING PETITION
:UNDER 37 CFR 1.378(c)
:

This is a decision on the electronic petition, filed April 14,2009 ,under 37 CFR 1.378(c) to accept the unintentionally delayed payment of the 7.5 year maintenance fee for the above-identified patent.

The petition is **GRANTED**.

The maintenance fee is accepted, and the above-identified patent reinstated as of April 14,2009 . This decision also constitutes notice that the fee has been accepted. An electronic copy of the petition and this decision has been created as an entry in the Image File Wrapper. Nevertheless, petitioner should print and retain an independent copy.

Telephone inquiries related to this electronic decision should be directed to the Electronic Business Center at 1-866-217-9197.

UNITED STATES PATENT AND TRADEMARK OFFICE

COMMISSIONER FOR PATENTS
UNITED STATES PATENT AND TRADEMARK OFFICE
WASHINGTON, D.C. 20231
www.uspto.gov

Paper No. 8

COPY MAILED

SEP 7 2001

OFFICE OF PETITIONS

MELTZER LIPPE GOLDSTEIN WOLF AND SCHLISS
190 WILLIS AVENUE
MINEOLA, NY 11501

In re Application of
O'Callaghan
Application No. 08/963,944
Filed: November 4, 1997
Attorney Docket No. 4743-16

DECISION ON PETITION

This is a decision on the petition under 37 CFR §1.137(b), filed August 10, 2001, to revive the above-identified application.

This above-identified application became abandoned for failure to timely file a response to a non-final Office Action which was mailed on December 27, 1999. The non-final Office Action set a three (3) month shortened statutory period for reply. No extensions of time were obtained under the provisions of 37 CFR §1.136(a). Accordingly, this application became abandoned on March 27, 2000. A Notice of Abandonment was mailed on July 31, 2000.

The requirements for the filing of a grantable petition under 37 CFR §1.137(b) have been met. This petition is hereby **Granted**.

A change of correspondence address was submitted on July 6. 2001. However, the correspondence address will not be entered because the form was not signed by an attorney of record. If appropriate, a change of address should be filed in accordance with MPEP 601.03. A courtesy copy of this decision is being mailed to the address given on the petition. However, the Office will mail all future correspondence solely to the address of record.

As per Petitioner's request, deposit account number 16-2500 has been charged the petition fee of $1,240.00 pursuant to 37 CFR §1.17(m).

This application is being forwarded to Technology Center 2600.

Telephone inquiries concerning this matter should be directed to Petitions Attorney Charlema R. Grant at (703) 306-0251.

Nancy Johnson for

Beverly M. Flanagan
Supervisory Petitions Examiner
Office of Petitions
Office of the Deputy Commissioner
for Patent Examination Policy

cc: Anthony C. Coles
Proskauer Rose LLP, Patent Dept.
1585 Broadway
New York, NY 10036

UNITED STATES PATENT AND TRADEMARK OFFICE

COMMISSIONER FOR PATENTS
UNITED STATES PATENT AND TRADEMARK OFFICE
WASHINGTON, D.C. 20231
www.uspto.gov

Paper No. 23

Frishauf, Holtz, Goodman & Langer & Chick, PC
767 Third Avenue
25th Floor
New York, NY 10017-2023

COPY MAILED

MAR 19 2002

OFFICE OF PETITIONS

In re Application of
Masaki Higurashi, et al.
Application No. 08/964,180
Filed: November 4, 1997
Attorney Docket No. 970668/LH

ON PETITION

This is a decision on the petition under 37 CFR 1.137(b), filed January 18, 2002, to revive the above-identified application.

The petition is **GRANTED**.

The above-identified application became abandoned for failure to reply within the meaning of 37CFR 1.113 in a timely manner to the final Office action mailed July 3, 2001, which set a shortened statutory period for reply of three (3) months. A two month extension of time under the provisions of 37 CFR 1.136(a) was obtained. Accordingly, the application became abandoned on December 4, 2001.

37 CFR 1.137(b)(3) requires a statement that the entire delay in filing the required reply from the due date for the reply until the filing of a grantable petition pursuant to 37 CFR 1.137(b) was unintentional. If the statement contained in the instant petition varies from the language required by 37CFR 1.137(b)(3), the statement contained in the instant petition is being construed as the statement required by 37 CFR 1.137(b)(3) and petitioner must notify the Office if this is **not** a correct interpretation of the statement contained in the instant petition.

The above-identified application is being revived solely for purposes of continuity with a continued prosecution application (CPA) filed on January 18, 2002.

Telephone inquiries concerning this decision should be directed to Cheryl Gibson-Baylor at (703)308-5111, or in her absence, Sherry Brinkley at (703)305-9220.

The application file is being forwarded to Technology Center 2600, Art Unit 2612.

Cheryl Gibson Baylor

Cheryl Gibson-Baylor
Petitions Examiner
Office of Petitions
Office of the Deputy Commissioner
for Patent Examination Policy

Frances Hicks for

Sherry Brinkley
Petitions Examiner

UNITED STATES PATENT AND TRADEMARK OFFICE

Commissioner for Patents
United States Patent and Trademark Office
P.O. Box 1450
Alexandria, VA 22313-1450
www.uspto.gov

In re Patent No. 6023637
Issue Date: February 8,2000
Application No. 08964245
Filed: November 4,1997
Attorney Docket No. BIOY:002/KRE

:DECISION GRANTING PETITION
:UNDER 37 CFR 1.378(c)

This is a decision on the electronic petition, filed April 10,2008 ,under 37 CFR 1.378(c) to accept the unintentionally delayed payment of the 7.5 year maintenance fee for the above-identified patent.

The petition is GRANTED.

The maintenance fee is accepted, and the above-identified patent reinstated as of April 10,2008 . This decision also constitutes notice that the fee has been accepted. An electronic copy of the petition and this decision has been created as an entry in an Image File Wrapper. Nevertheless, petitioner should print and retain an independent copy

Telephone inquires related to this electronic decision should be directed to the Electronic Business Center at 1-866-217-9197.

Under the Paperwork Reduction Act of 1995, no persons are required to respond to a collection of information unless it displays valid OMB control number.

PETITION TO ACCEPT UNINTENTIONALLY DELAYED PAYMENT OF MAINTENANCE FEE IN AN EXPIRED PATENT (37 CFR 1.378(c))

Patent Number	Issue Date (YYYY-MM-DD)	Application Number	Filing Date (YYYY-MM-DD)	Docket Number (if applicable)
6,023,637	2000-02-08	08964245	1997-11-04	

CAUTION: Maintenance fee (and surcharge, if any) payment must correctly identify: (1) the patent number and (2) the application number of the actual U.S. application leading to issuance of that patent to ensure the fee(s) is/are associated with the correct patent. 37 CFR 1.366(c) and (d).

SMALL ENTITY
☒ Patentee claims, or has previously claimed, small entity status. See 37 CFR 1.27.

LOSS OF ENTITLEMENT TO SMALL ENTITY STATUS
☐ Patentee is no longer entitled to small entity status. See 37 CFR 1.27(g)

NOT Small Entity		Small Entity	
Fee	Code	Fee	Code
○ 3 ½ year	(1551)	○ 3 ½ year	(2551)
○ 7 ½ year	(1552)	◉ 7 ½ year	(2552)
○ 11 ½ year	(1553)	○ 11 ½ year	(2553)

SURCHARGE
The surcharge required by 37 CFR 1.20(i)(2) (Fee Code 1558) must be paid as a condition of accepting unintentionally delayed payment of the maintenance fee.

MAINTENANCE FEE (37 CFR 1.20(e)-(g))
The appropriate maintenance fee must be submitted with this petition.

STATEMENT
THE UNDERSIGNED CERTIFIES THAT THE DELAY IN PAYMENT OF THE MAINTENANCE FEE TO THIS PATENT WAS UNINTENTIONAL

PETITIONER(S) REQUEST THAT THE DELAYED PAYMENT OF THE MAINTENANCE FEE BE ACCEPTED AND THE PATENT REINSTATED

THIS PORTION MUST BE COMPLETED BY THE SIGNATORY OR SIGNATORIES

37 CFR 1.378(d) states: "Any petition under this section must be signed by an attorney or agent registered to practice before the Patent and Trademark Office, or by the patentee, the assignee, or other party in interest."

I certify, in accordance with 37 CFR 1.4(d)(4) that I am

○ An attorney or agent registered to practice before the Patent and Trademark Office

○ A sole patentee

◉ A joint patentee; I certify that I am authorized to sign this submission on behalf of all the other patentees.

○ A joint patentee; all of whom are signing this e-petition

○ The assignee of record of the entire interest

A Joint Patentee and I certify that I am authorized to sign this submission on behalf of all the other patentees			
A signature of the applicant or representative is required in accordance with 37 CFR 1.33 and 10.18. Please see 37 CFR 1.4(d) for the form of the signature.			
Signature	/Zhong Qi Liu/	Date (YYYY-MM-DD)	2008-04-10
Name	Zhong Qi Liu		

This collection of information is required by 37 CFR 1.378(c). The information is required to obtain or retain a benefit by the public which is to file (and by the USPTO to process) an application. Confidentiality is governed by 35 U.S.C. 122 and 37 CFR 1.11 and 1.14. This collection is estimated to take 1 hour to complete, including gathering, preparing, and submitting the completed application form to the USPTO. Time will vary depending upon the individual case. Any comments on the amount of time you require to complete this form and/ or suggestions for reducing this burden, should be sent to the Chief Information Officer, U.S. Patent and Trademark Office, U.S. Department of Commerce, P.O. Box 1450, Alexandria, VA 22313-1450. DO NOT SEND FEES OR COMPLETED FORMS TO THIS ADDRESS. **This form can only be used when in conjunction with EFS-Web. If this form is mailed to the USPTO, it may cause delays in reinstating the patent.**

Privacy Act Statement

The Privacy Act of 1974 (P.L. 93-579) requires that you be given certain information in connection with your submission of the attached form related to a patent application or patent. Accordingly, pursuant to the requirements of the Act, please be advised that: (1) the general authority for the collection of this information is 35 U.S.C. 2(b)(2); (2) furnishing of the information solicited is voluntary; and (3) the principal purpose for which the information is used by the U.S. Patent and Trademark Office is to process and/or examine your submission related to a patent application or patent. If you do not furnish the requested information, the U.S. Patent and Trademark Office may not be able to process and/or examine your submission, which may result in termination of proceedings or abandonment of the application or expiration of the patent.

The information provided by you in this form will be subject to the following routine uses:

1. The information on this form will be treated confidentially to the extent allowed under the Freedom of Information Act (5 U.S.C. 552) and the Privacy Act (5 U.S.C. 552a). Records from this system of records may be disclosed to the Department of Justice to determine whether the Freedom of Information Act requires disclosure of these record s.

2. A record from this system of records may be disclosed, as a routine use, in the course of presenting evidence to a court, magistrate, or administrative tribunal, including disclosures to opposing counsel in the course of settlement negotiations.

3. A record in this system of records may be disclosed, as a routine use, to a Member of Congress submitting a request involving an individual, to whom the record pertains, when the individual has requested assistance from the Member with respect to the subject matter of the record.

4. A record in this system of records may be disclosed, as a routine use, to a contractor of the Agency having need for the information in order to perform a contract. Recipients of information shall be required to comply with the requirements of the Privacy Act of 1974, as amended, pursuant to 5 U.S.C. 552a(m).

5. A record related to an International Application filed under the Patent Cooperation Treaty in this system of records may be disclosed, as a routine use, to the International Bureau of the World Intellectual Property Organization, pursuant to the Patent Cooperation Treaty.

6. A record in this system of records may be disclosed, as a routine use, to another federal agency for purposes of National Security review (35 U.S.C. 181) and for review pursuant to the Atomic Energy Act (42 U.S.C. 218(c)).

7. A record from this system of records may be disclosed, as a routine use, to the Administrator, General Services, or his/her designee, during an inspection of records conducted by GSA as part of that agency's responsibility to recommend improvements in records management practices and programs, under authority of 44 U.S.C. 2904 and 2906. Such disclosure shall be made in accordance with the GSA regulations governing inspection of records for this purpose, and any other relevant (i.e., GSA or Commerce) directive. Such disclosure shall not be used to make determinations about individuals.

8. A record from this system of records may be disclosed, as a routine use, to the public after either publication of the application pursuant to 35 U.S.C. 122(b) or issuance of a patent pursuant to 35 U.S.C. 151. Further, a record may be disclosed, subject to the limitations of 37 CFR 1.14, as a routine use, to the public if the record was filed in an application which became abandoned or in which the proceedings were terminated and which application is referenced by either a published application, an application open to public inspections or an issued patent.

9. A record from this system of records may be disclosed, as a routine use, to a Federal, State, or local law enforcement agency, if the USPTO becomes aware of a violation or potential violation of law or regulation.

UNITED STATES PATENT AND TRADEMARK OFFICE

Commissioner for Patents
United States Patent and Trademark Office
P.O. Box 1450
Alexandria, VA 22313-1450
www.uspto.gov

Paper No. 59

MCGLEW & TUTTLE, PC
1 SCARBOROUGH STATION PLAZA
SCARBOROUGH, NY 10510-0827

COPY MAILED

OCT 15 2004

OFFICE OF PETITIONS

In re Application of	:	
Hitoshi Terashima et al	:	
Application No. 08/964,257	:	ON PETITION
Filed: November 4, 1997	:	
Attorney Docket No. 56356	:	

This is a decision on the petition, filed October 4, 2004, which is being treated under 37 CFR 1.313(c)(2) to withdraw the above-identified application from issue after payment of the issue fee.

The petition is **GRANTED**.

The above-identified application is withdrawn from issue for consideration of a submission under 37 CFR 1.114 (request for continued examination). See 37 CFR 1.313(c)(2).

Petitioner is advised that the issue fee paid on September 8, 2004 in the above-identified application cannot be refunded. If, however, the above-identified application is again allowed, petitioner may request that it be applied towards the issue fee required by the new Notice of Allowance.[1]

Telephone inquiries should be directed to Wan Laymon at (571) 272-3220.

Upon receipt of the file in the Office of Petitions, the file will be forwarded to Technology Center AU 2626 for processing of the request for continued examination under 37 CFR 1.114.

Wan Laymon
Petitions Examiner
Office of Petitions
Office of the Deputy Commissioner
for Patent Examination Policy

---

[1] The request to apply the issue fee to the new Notice may be satisfied by completing and returning the new Issue Fee Transmittal Form PTOL-85(b), which includes the following language thereon: "Commissioner for Patents is requested to apply the Issue Fee and Publication Fee (if any) or re-apply any previously paid issue fee to the application identified above." Petitioner is advised that, whether a fee is indicated as being due or not, the Issue Fee Transmittal Form **must** be completed and timely submitted to avoid abandonment. Note the language in bold text on the first page of the Notice of Allowance and Fee(s) Due (PTOL-85).

UNITED STATES PATENT AND TRADEMARK OFFICE

COMMISSIONER FOR PATENT
UNITED STATES PATENT AND TRADEMARK OFFIC
WASHINGTON, D.C. 20231
www.uspto.go

Paper No. 20

TEXAS INSTRUMENTS INCORPORATED
P.O. BOX 655474, M/S 3999
DALLAS, TX 75265

COPY MAILED

MAR 2 0 2003

OFFICE OF PETITIONS

In re Application of	:	
Robert Alvarrez et al	:	
Application No. 08/964,518	:	ON PETITION
Filed: November 5, 1997	:	
Attorney Docket No. TI-19177	:	

This is a decision on the petition under 37 CFR 1.137(b), filed December 31, 2002, to revive the above-identified application.

The petition is **GRANTED**.

The above-identified application became abandoned for failure to reply in a timely manner to the Office action mailed February 14, 2002, which set a shortened statutory period for reply of one (1) month or thirty days whichever is longer. No extensions of time under the provisions of 37 CFR 1.136(a) were obtained. Accordingly, the above-identified application became abandoned on March 16, 2002.

Telephone inquiries concerning this decision should be directed to Irvin Dingle at (703) 306-5684.

The application file is being forwarded to Technology Center 2800 for further processing.

Irvin Dingle
Petitions Examiner
Office of Petitions
Office of the Deputy Commissioner
for Patent Examination Policy

UNITED STATES PATENT AND TRADEMARK OFFICE

Commissioner for Patents
United States Patent and Trademark Office
P.O. Box 1450
Alexandria, VA 22313-1450
www.uspto.gov

In re Patent No. 5971764
Issue Date: October 26,1999
Application No. 08964844
Filed: November 5,1997
Attorney Docket No. 43857.1000

:

:DECISION GRANTING PETITION
:UNDER 37 CFR 1.378(c)

:

This is a decision on the electronic petition, filed December 14,2007 ,under 37 CFR 1.378(c) to accept the unintentionally delayed payment of the 7.5 year maintenance fee for the above-identified patent.

The petition is GRANTED.

The maintenance fee is accepted, and the above-identified patent reinstated as of December 14,2007. This decision also constitutes notice that the fee has been accepted. An electronic copy of the petition and this decision has been created as an entry in an Image File Wrapper. Nevertheless, petitioner should print and retain an independent copy

Telephone inquires related to this electronic decision should be directed to the Electronic Business Center at 1-866-217-9197.

Under the Paperwork Reduction Act of 1995, no persons are required to respond to a collection of information unless it displays valid OMB control number.

PETITION TO ACCEPT UNINTENTIONALLY DELAYED PAYMENT OF MAINTENANCE FEE IN AN EXPIRED PATENT (37 CFR 1.378(c))

Patent Number	Issue Date (YYYY-MM-DD)	Application Number	Filing Date (YYYY-MM-DD)	Docket Number (if applicable)
5971764	1999-10-26	08964844	1997-11-05	

CAUTION: Maintenance fee (and surcharge, if any) payment must correctly identify: (1) the patent number and (2) the application number of the actual U.S. application leading to issuance of that patent to ensure the fee(s) is/are associated with the correct patent. 37 CFR 1.366(c) and (d).

SMALL ENTITY
☒ Patentee claims, or has previously claimed, small entity status. See 37 CFR 1.27.

LOSS OF ENTITLEMENT TO SMALL ENTITY STATUS
☐ Patentee is no longer entitled to small entity status. See 37 CFR 1.27(g)

NOT Small Entity		Small Entity	
Fee	Code	Fee	Code
○ 3 ½ year	(1551)	○ 3 ½ year	(2551)
○ 7 ½ year	(1552)	◉ 7 ½ year	(2552)
○ 11 ½ year	(1553)	○ 11 ½ year	(2553)

SURCHARGE
The surcharge required by 37 CFR 1.20(i)(2) (Fee Code 1558) must be paid as a condition of accepting unintentionally delayed payment of the maintenance fee.

MAINTENANCE FEE (37 CFR 1.20(e)-(g))
The appropriate maintenance fee must be submitted with this petition.

STATEMENT
THE UNDERSIGNED CERTIFIES THAT THE DELAY IN PAYMENT OF THE MAINTENANCE FEE TO THIS PATENT WAS UNINTENTIONAL

PETITIONER(S) REQUEST THAT THE DELAYED PAYMENT OF THE MAINTENANCE FEE BE ACCEPTED AND THE PATENT REINSTATED

THIS PORTION MUST BE COMPLETED BY THE SIGNATORY OR SIGNATORIES

37 CFR 1.378(d) states: "Any petition under this section must be signed by an attorney or agent registered to practice before the Patent and Trademark Office, or by the patentee, the assignee, or other party in interest."

I certify, in accordance with 37 CFR 1.4(d)(4) that I am

◉ An attorney or agent registered to practice before the Patent and Trademark Office

○ A sole patentee

○ A joint patentee; I certify that I am authorized to sign this submission on behalf of all the other patentees.

○ A joint patentee; all of whom are signing this e-petition

○ The assignee of record of the entire interest

Patent Practitioner			
A signature of the applicant or representative is required in accordance with 37 CFR 1.33 and 10.18. Please see 37 CFR 1.4(d) for the form of the signature			
Signature	/James Robertson/	Date (YYYY-MM-DD)	2007-12-14
Name	James M. Robertson	Registration Number	36905

This collection of information is required by 37 CFR 1.378(c). The information is required to obtain or retain a benefit by the public which is to file (and by the USPTO to process) an application. Confidentiality is governed by 35 U.S.C. 122 and 37 CFR 1.11 and 1.14. This collection is estimated to take 1 hour to complete, including gathering, preparing, and submitting the completed application form to the USPTO. Time will vary depending upon the individual case. Any comments on the amount of time you require to complete this form and/ or suggestions for reducing this burden, should be sent to the Chief Information Officer, U.S. Patent and Trademark Office, U.S. Department of Commerce, P.O. Box 1450, Alexandria, VA 22313-1450. DO NOT SEND FEES OR COMPLETED FORMS TO THIS ADDRESS. **This form can only be used when in conjunction with EFS-Web. If this form is mailed to the USPTO, it may cause delays in reinstating the patent.**

Privacy Act Statement

The Privacy Act of 1974 (P.L. 93-579) requires that you be given certain information in connection with your submission of the attached form related to a patent application or patent. Accordingly, pursuant to the requirements of the Act, please be advised that: (1) the general authority for the collection of this information is 35 U.S.C. 2(b)(2); (2) furnishing of the information solicited is voluntary; and (3) the principal purpose for which the information is used by the U.S. Patent and Trademark Office is to process and/or examine your submission related to a patent application or patent. If you do not furnish the requested information, the U.S. Patent and Trademark Office may not be able to process and/or examine your submission, which may result in termination of proceedings or abandonment of the application or expiration of the patent.

The information provided by you in this form will be subject to the following routine uses:

1. The information on this form will be treated confidentially to the extent allowed under the Freedom of Information Act (5 U.S.C. 552) and the Privacy Act (5 U.S.C. 552a). Records from this system of records may be disclosed to the Department of Justice to determine whether the Freedom of Information Act requires disclosure of these record s.

2. A record from this system of records may be disclosed, as a routine use, in the course of presenting evidence to a court, magistrate, or administrative tribunal, including disclosures to opposing counsel in the course of settlement negotiations.

3. A record in this system of records may be disclosed, as a routine use, to a Member of Congress submitting a request involving an individual, to whom the record pertains, when the individual has requested assistance from the Member with respect to the subject matter of the record.

4. A record in this system of records may be disclosed, as a routine use, to a contractor of the Agency having need for the information in order to perform a contract. Recipients of information shall be required to comply with the requirements of the Privacy Act of 1974, as amended, pursuant to 5 U.S.C. 552a(m).

5. A record related to an International Application filed under the Patent Cooperation Treaty in this system of records may be disclosed, as a routine use, to the International Bureau of the World Intellectual Property Organization, pursuant to the Patent Cooperation Treaty.

6. A record in this system of records may be disclosed, as a routine use, to another federal agency for purposes of National Security review (35 U.S.C. 181) and for review pursuant to the Atomic Energy Act (42 U.S.C. 218(c)).

7. A record from this system of records may be disclosed, as a routine use, to the Administrator, General Services, or his/her designee, during an inspection of records conducted by GSA as part of that agency's responsibility to recommend improvements in records management practices and programs, under authority of 44 U.S.C. 2904 and 2906. Such disclosure shall be made in accordance with the GSA regulations governing inspection of records for this purpose, and any other relevant (i.e., GSA or Commerce) directive. Such disclosure shall not be used to make determinations about individuals.

8. A record from this system of records may be disclosed, as a routine use, to the public after either publication of the application pursuant to 35 U.S.C. 122(b) or issuance of a patent pursuant to 35 U.S.C. 151. Further, a record may be disclosed, subject to the limitations of 37 CFR 1.14, as a routine use, to the public if the record was filed in an application which became abandoned or in which the proceedings were terminated and which application is referenced by either a published application, an application open to public inspections or an issued patent.

9. A record from this system of records may be disclosed, as a routine use, to a Federal, State, or local law enforcement agency, if the USPTO becomes aware of a violation or potential violation of law or regulation.

Under the Paperwork Reduction Act of 1995, no persons are required to respond to a collection of information unless it displays valid OMB control number.

PETITION TO ACCEPT UNINTENTIONALLY DELAYED PAYMENT OF MAINTENANCE FEE IN AN EXPIRED PATENT (37 CFR 1.378(c))

Patent Number	Issue Date (YYYY-MM-DD)	Application Number	Filing Date (YYYY-MM-DD)	Docket Number (if applicable)
5,881,755	1999-03-16	08/964,932	1997-11-05	838.100

CAUTION: Maintenance fee (and surcharge, if any) payment must correctly identify: (1) the patent number and (2) the application number of the actual U.S. application leading to issuance of that patent to ensure the fee(s) is/are associated with the correct patent. 37 CFR 1.366(c) and (d).

SMALL ENTITY
☒ Patentee claims, or has previously claimed, small entity status. See 37 CFR 1.27.

LOSS OF ENTITLEMENT TO SMALL ENTITY STATUS
☐ Patentee is no longer entitled to small entity status. See 37 CFR 1.27(g)

NOT Small Entity		Small Entity	
Fee	Code	Fee	Code
○ 3 ½ year	(1551)	○ 3 ½ year	(2551)
○ 7 ½ year	(1552)	◉ 7 ½ year	(2552)
○ 11 ½ year	(1553)	○ 11 ½ year	(2553)

SURCHARGE
The surcharge required by 37 CFR 1.20(i)(2) (Fee Code 1558) must be paid as a condition of accepting unintentionally delayed payment of the maintenance fee.

MAINTENANCE FEE (37 CFR 1.20(e)-(g))
The appropriate maintenance fee must be submitted with this petition.

STATEMENT
THE UNDERSIGNED CERTIFIES THAT THE DELAY IN PAYMENT OF THE MAINTENANCE FEE TO THIS PATENT WAS UNINTENTIONAL

PETITIONER(S) REQUEST THAT THE DELAYED PAYMENT OF THE MAINTENANCE FEE BE ACCEPTED AND THE PATENT REINSTATED

THIS PORTION MUST BE COMPLETED BY THE SIGNATORY OR SIGNATORIES

37 CFR 1.378(d) states: "Any petition under this section must be signed by an attorney or agent registered to practice before the Patent and Trademark Office, or by the patentee, the assignee, or other party in interest."

I certify, in accordance with 37 CFR 1.4(d)(4) that I am

◉ An attorney or agent registered to practice before the Patent and Trademark Office

○ A sole patentee

○ A joint patentee; I certify that I am authorized to sign this submission on behalf of all the other patentees.

○ A joint patentee; all of whom are signing this e-petition

○ The assignee of record of the entire interest

Patent Practitioner			
A signature of the applicant or representative is required in accordance with 37 CFR 1.33 and 10.18. Please see 37 CFR 1.4(d) for the form of the signature			
Signature	/Richard W. Hanes/	Date (YYYY-MM-DD)	2007-04-05
Name	Richard W. Hanes	Registration Number	19530

This collection of information is required by 37 CFR 1.378(c). The information is required to obtain or retain a benefit by the public which is to file (and by the USPTO to process) an application. Confidentiality is governed by 35 U.S.C. 122 and 37 CFR 1.11 and 1.14. This collection is estimated to take 1 hour to complete, including gathering, preparing, and submitting the completed application form to the USPTO. Time will vary depending upon the individual case. Any comments on the amount of time you require to complete this form and/ or suggestions for reducing this burden, should be sent to the Chief Information Officer, U.S. Patent and Trademark Office, U.S. Department of Commerce, P.O. Box 1450, Alexandria, VA 22313-1450. DO NOT SEND FEES OR COMPLETED FORMS TO THIS ADDRESS. **This form can only be used when in conjunction with EFS-Web. If this form is mailed to the USPTO, it may cause delays in reinstating the patent.**

Privacy Act Statement

The Privacy Act of 1974 (P.L. 93-579) requires that you be given certain information in connection with your submission of the attached form related to a patent application or patent. Accordingly, pursuant to the requirements of the Act, please be advised that: (1) the general authority for the collection of this information is 35 U.S.C. 2(b)(2); (2) furnishing of the information solicited is voluntary; and (3) the principal purpose for which the information is used by the U.S. Patent and Trademark Office is to process and/or examine your submission related to a patent application or patent. If you do not furnish the requested information, the U.S. Patent and Trademark Office may not be able to process and/or examine your submission, which may result in termination of proceedings or abandonment of the application or expiration of the patent.

The information provided by you in this form will be subject to the following routine uses:

1. The information on this form will be treated confidentially to the extent allowed under the Freedom of Information Act (5 U.S.C. 552) and the Privacy Act (5 U.S.C. 552a). Records from this system of records may be disclosed to the Department of Justice to determine whether the Freedom of Information Act requires disclosure of these record s.

2. A record from this system of records may be disclosed, as a routine use, in the course of presenting evidence to a court, magistrate, or administrative tribunal, including disclosures to opposing counsel in the course of settlement negotiations.

3. A record in this system of records may be disclosed, as a routine use, to a Member of Congress submitting a request involving an individual, to whom the record pertains, when the individual has requested assistance from the Member with respect to the subject matter of the record.

4. A record in this system of records may be disclosed, as a routine use, to a contractor of the Agency having need for the information in order to perform a contract. Recipients of information shall be required to comply with the requirements of the Privacy Act of 1974, as amended, pursuant to 5 U.S.C. 552a(m).

5. A record related to an International Application filed under the Patent Cooperation Treaty in this system of records may be disclosed, as a routine use, to the International Bureau of the World Intellectual Property Organization, pursuant to the Patent Cooperation Treaty.

6. A record in this system of records may be disclosed, as a routine use, to another federal agency for purposes of National Security review (35 U.S.C. 181) and for review pursuant to the Atomic Energy Act (42 U.S.C. 218(c)).

7. A record from this system of records may be disclosed, as a routine use, to the Administrator, General Services, or his/her designee, during an inspection of records conducted by GSA as part of that agency's responsibility to recommend improvements in records management practices and programs, under authority of 44 U.S.C. 2904 and 2906. Such disclosure shall be made in accordance with the GSA regulations governing inspection of records for this purpose, and any other relevant (i.e., GSA or Commerce) directive. Such disclosure shall not be used to make determinations about individuals.

8. A record from this system of records may be disclosed, as a routine use, to the public after either publication of the application pursuant to 35 U.S.C. 122(b) or issuance of a patent pursuant to 35 U.S.C. 151. Further, a record may be disclosed, subject to the limitations of 37 CFR 1.14, as a routine use, to the public if the record was filed in an application which became abandoned or in which the proceedings were terminated and which application is referenced by either a published application, an application open to public inspections or an issued patent.

9. A record from this system of records may be disclosed, as a routine use, to a Federal, State, or local law enforcement agency, if the USPTO becomes aware of a violation or potential violation of law or regulation.

UNITED STATES PATENT AND TRADEMARK OFFICE

Commissioner for Patents
United States Patent and Trademark Office
P.O. Box 1450
Alexandria, VA 22313-1450
www.uspto.gov

In re Patent No. 5881755
Issue Date: March 16,1999
Application No. 08964932
Filed: November 5,1997
Attorney Docket No. 838.100

:
:DECISION GRANTING PETITION
:UNDER 37 CFR 1.378(c)
:

This is a decision on the electronic petition, filed April 5,2007 ,under 37 CFR 1.378(c) to accept the unintentionally delayed payment of the 7.5 year maintenance fee for the above-identified patent.

The petition is GRANTED.

The maintenance fee is accepted, and the above-identified patent reinstated as of April 5,2007 . This decision also constitutes notice that the fee has been accepted. An electronic copy of the petition and this decision has been created as an entry in an Image File Wrapper. Nevertheless, petitioner should print and retain an independent copy

Telephone inquires related to this electronic decision should be directed to the Electronic Business Center at 1-866-217-9197.

UNITED STATES PATENT AND TRADEMARK OFFICE

Commissioner for Patents
United States Patent and Trademark Office
P.O. Box 1450
Alexandria, VA 22313-1450
www.uspto.gov

KLARQUIST SPARKMAN LLP
121 S.W. SALMON STREET, SUITE 1600
PORTLAND, OR 97204

COPY MAILED

AUG 2 4 2005

OFFICE OF PETITIONS

In re Application of	:	
Philip R. Wiser et al	:	
Application No. 08/966,072	:	DECISION ON PETITION
Filed: November 7, 1997	:	
Attorney Docket No. P-2064	:	

This is a decision on the petition to defer issue pursuant to 37 CFR 1.314, filed May 31, 2005, which is being treated as a petition under 37 CFR 1.181 (no fee) for an initialed Form 1449 showing that the Examiner has considered the references submitted to the Office on January 27, 2005.

The petition is granted.

As requested, an initialed Form 1449 showing consideration by the Examiner of the IDS submitted on January 27, 2005 and received in the Office on January 31, 2005 accompanies this decision on petition.

A fee is unnecessary for the present petition. Accordingly, the $130 petition fee submitted will be refunded to petitioner's deposit account.

Any inquiries concerning this matter should be directed to the undersigned at (571) 272-3218.

This matter is being referred to Publishing Division.

Frances Hicks
Petitions Examiner
Office of Petitions

ATTACHMENT: Initialed Form 1449

NOTICE RE: CERTIFICATES OF CORRECTION

DATE : 02/13/2002

Paper No.: 35

TO : Supervisor, Art Unit 1700

SUBJECT : Certificate of Correction Request in Patent No.: RE 37101

A response to the following question(s) is requested with respect to the accompanying request for a certificate of correction

[X] 1. Would the change(s) requested, under 37 C.F.R. 1.323, correcting Applicant/Attorney's (A or Atty.) errors, constitute new matter or require reexamination of the application?

[X] 2. Would the change(s) requested, under 37 C.F.R. 1.323, correcting Applicant/Attorney's (A or Atty.) errors, materially affect the scope or meaning of the claims allowed by the examiner in the patent?

[X] 3. Applicant disagrees with change(s) initialed and dated by Examiner in lieu of an Examiner's Amendment. Should the requested changes be granted?

[X] 4. With respect to the change(s) requested, correcting Office and/or printing (O, Off, C, and/or P) errors, should the patent read as shown in the certificate of correction?

[X] 5. If the amendment filed , had been considered by the Examiner, would the amendment have been entered?

PLEASE COMPLETE THIS FORM AND RETURN WITH FILE, WITHIN 7 DAYS, TO CERTIFICATES OF CORRECTION BRANCH - PK 3-915/922 PALM LOCATION 7580 - TEL. N0. 305-8309

Note your decision(s), regarding the changes requested in the Request for Certificate of Correction, by placing an X in the box that reflects your decision to the corresponding question. Note any comments below.

[X] 1.	YES	[X] NO	[ ] Comments below
[X] 2.	YES	[X] NO	[ ] Comments below
[ ] 3.	YES	[X] NO	[ ] Comments below
[ ] 4.	YES	[X] NO	[ ] Comments below
[ ] 5.	YES	[X] NO	[ ] Comments below

[ ] Comments:

NECHOLUS OGDEN
PRIMARY EXAMINER

Supervisor

1751

Art Unit

UNITED STATES PATENT AND TRADEMARK OFFICE

CERTIFICATE OF CORRECTION

PATENT NO. : Re 37,101 E
DATED : March 20, 2001
INVENTOR(S) : Gerbrand Deetman

It is certified that error appears in the above-identified patent and that said Letters Patent is hereby corrected as shown below:

Column 48,
Line 28, delete "C_{15}" and insert -- C_{18} --

Column 50,
Line 49, delete "1 to 5" and insert -- 1 to 3 --

Column 51,
Lines 2, 38 and 63, delete "1 to 5" and insert -- 1 to 3 --

Column 52,
Lines 17, 38 and 59, delete "1 to 5" and insert -- 1 to 3 --

Signed and Sealed this

Twenty-seventh Day of August, 2002

Attest:

Attesting Officer

JAMES E. ROGAN
Director of the United States Patent and Trademark Office

PRINTER'S TRIM LINE

PRINTER'S TRIM LINE

UNITED STATES PATENT AND TRADEMARK OFFICE

CERTIFICATE OF CORRECTION

PATENT NO. : RE37,101 E

DATED : March 20, 2001

INVENTOR(S) : Gerbrand Deetman

It is certified that error appears in the above-identified patent and that said Letters Patent is hereby corrected as shown below:

Column 48, line 28, "delete C_{15}" and insert –C_{18}—
Column 50, line 49, delete "1 to 5" and insert –1 to 3—
Column 51, line 2, delete "1 to 5" and insert –1 to 3—
Column 51, line 38, delete "1 to 5" and insert –1 to 3—
Column 51, line 63, delete "1 to 5" and insert –1 to 3—
Column 52, line 17, delete "1 to 5" and insert –1 to 3—
Column 52, line 38, delete "1 to 5" and insert –1 to 3—
Column 52, line 59, delete "1 to 5" and insert –1 to 3—

MAILING ADDRESS OF SENDER:
Craig M. Lundell
HOWREY SIMON ARNOLD & WHITE, LLP
750 Bering Drive
Houston, Texas 77057-2198

PATENT NO.RE37,101 E
No. of add'l. copies
@ 50¢ per page
⇨ _____

PTO/SB/66 (03-09)
Approved for use through 03/31/2012. OMB 0651-0016
U.S. Patent and Trademark Office: U.S. DEPARTMENT OF COMMERCE
Under the Paperwork Reduction Act of 1995, no persons are required to respond to a collection of information unless it displays valid OMB control number.

PETITION TO ACCEPT UNINTENTIONALLY DELAYED PAYMENT OF MAINTENANCE FEE IN AN EXPIRED PATENT (37 CFR 1.378(c))

Patent Number	Issue Date (YYYY-MM-DD)	Application Number	Filing Date (YYYY-MM-DD)	Docket Number (if applicable)
6,110,429	2000-08-29	08/967,560	1997-11-12	JNSG-30569

CAUTION: Maintenance fee (and surcharge, if any) payment must correctly identify: (1) the patent number and (2) the application number of the actual U.S. application leading to issuance of that patent to ensure the fee(s) is/are associated with the correct patent. 37 CFR 1.366(c) and (d).

SMALL ENTITY
☒ Patentee claims, or has previously claimed, small entity status. See 37 CFR 1.27.

LOSS OF ENTITLEMENT TO SMALL ENTITY STATUS
☐ Patentee is no longer entitled to small entity status. See 37 CFR 1.27(g)

NOT Small Entity		Small Entity	
Fee	Code	Fee	Code
○ 3 ½ year	(1551)	○ 3 ½ year	(2551)
○ 7 ½ year	(1552)	◉ 7 ½ year	(2552)
○ 11 ½ year	(1553)	○ 11 ½ year	(2553)

SURCHARGE
The surcharge required by 37 CFR 1.20(i)(2) (Fee Code 1558) must be paid as a condition of accepting unintentionally delayed payment of the maintenance fee.

MAINTENANCE FEE (37 CFR 1.20(e)-(g))
The appropriate maintenance fee must be submitted with this petition.

STATEMENT
THE UNDERSIGNED CERTIFIES THAT THE DELAY IN PAYMENT OF THE MAINTENANCE FEE TO THIS PATENT WAS UNINTENTIONAL

PETITIONER(S) REQUEST THAT THE DELAYED PAYMENT OF THE MAINTENANCE FEE BE ACCEPTED AND THE PATENT REINSTATED

THIS PORTION MUST BE COMPLETED BY THE SIGNATORY OR SIGNATORIES

37 CFR 1.378(d) states: "Any petition under this section must be signed by an attorney or agent registered to practice before the Patent and Trademark Office, or by the patentee, the assignee, or other party in interest."

I certify, in accordance with 37 CFR 1.4(d)(4) that I am

◉ An attorney or agent registered to practice before the Patent and Trademark Office

○ A sole patentee

○ A joint patentee; I certify that I am authorized to sign this submission on behalf of all the other patentees.

○ A joint patentee; all of whom are signing this e-petition

○ The assignee of record of the entire interest

Patent Practitioner			
A signature of the applicant or representative is required in accordance with 37 CFR 1.33 and 10.18. Please see 37 CFR 1.4(d) for the form of the signature			
Signature	/Grady K. Bergen/	Date (YYYY-MM-DD)	2009-06-17
Name	Grady K. Bergen	Registration Number	37587

This collection of information is required by 37 CFR 1.378(c). The information is required to obtain or retain a benefit by the public which is to file (and by the USPTO to process) an application. Confidentiality is governed by 35 U.S.C. 122 and 37 CFR 1.11 and 1.14. This collection is estimated to take 1 hour to complete, including gathering, preparing, and submitting the completed application form to the USPTO. Time will vary depending upon the individual case. Any comments on the amount of time you require to complete this form and/ or suggestions for reducing this burden, should be sent to the Chief Information Officer, U.S. Patent and Trademark Office, U.S. Department of Commerce, P.O. Box 1450, Alexandria, VA 22313-1450. DO NOT SEND FEES OR COMPLETED FORMS TO THIS ADDRESS. **This form can only be used when in conjunction with EFS-Web. If this form is mailed to the USPTO, it may cause delays in reinstating the patent.**

Privacy Act Statement

The Privacy Act of 1974 (P.L. 93-579) requires that you be given certain information in connection with your submission of the attached form related to a patent application or patent. Accordingly, pursuant to the requirements of the Act, please be advised that: (1) the general authority for the collection of this information is 35 U.S.C. 2(b)(2); (2) furnishing of the information solicited is voluntary; and (3) the principal purpose for which the information is used by the U.S. Patent and Trademark Office is to process and/or examine your submission related to a patent application or patent. If you do not furnish the requested information, the U.S. Patent and Trademark Office may not be able to process and/or examine your submission, which may result in termination of proceedings or abandonment of the application or expiration of the patent.

The information provided by you in this form will be subject to the following routine uses:

1. The information on this form will be treated confidentially to the extent allowed under the Freedom of Information Act (5 U.S.C. 552) and the Privacy Act (5 U.S.C. 552a). Records from this system of records may be disclosed to the Department of Justice to determine whether the Freedom of Information Act requires disclosure of these records.

2. A record from this system of records may be disclosed, as a routine use, in the course of presenting evidence to a court, magistrate, or administrative tribunal, including disclosures to opposing counsel in the course of settlement negotiations.

3. A record in this system of records may be disclosed, as a routine use, to a Member of Congress submitting a request involving an individual, to whom the record pertains, when the individual has requested assistance from the Member with respect to the subject matter of the record.

4. A record in this system of records may be disclosed, as a routine use, to a contractor of the Agency having need for the information in order to perform a contract. Recipients of information shall be required to comply with the requirements of the Privacy Act of 1974, as amended, pursuant to 5 U.S.C. 552a(m).

5. A record related to an International Application filed under the Patent Cooperation Treaty in this system of records may be disclosed, as a routine use, to the International Bureau of the World Intellectual Property Organization, pursuant to the Patent Cooperation Treaty.

6. A record in this system of records may be disclosed, as a routine use, to another federal agency for purposes of National Security review (35 U.S.C. 181) and for review pursuant to the Atomic Energy Act (42 U.S.C. 218(c)).

7. A record from this system of records may be disclosed, as a routine use, to the Administrator, General Services, or his/her designee, during an inspection of records conducted by GSA as part of that agency's responsibility to recommend improvements in records management practices and programs, under authority of 44 U.S.C. 2904 and 2906. Such disclosure shall be made in accordance with the GSA regulations governing inspection of records for this purpose, and any other relevant (i.e., GSA or Commerce) directive. Such disclosure shall not be used to make determinations about individuals.

8. A record from this system of records may be disclosed, as a routine use, to the public after either publication of the application pursuant to 35 U.S.C. 122(b) or issuance of a patent pursuant to 35 U.S.C. 151. Further, a record may be disclosed, subject to the limitations of 37 CFR 1.14, as a routine use, to the public if the record was filed in an application which became abandoned or in which the proceedings were terminated and which application is referenced by either a published application, an application open to public inspections or an issued patent.

9. A record from this system of records may be disclosed, as a routine use, to a Federal, State, or local law enforcement agency, if the USPTO becomes aware of a violation or potential violation of law or regulation.

UNITED STATES PATENT AND TRADEMARK OFFICE

Commissioner for Patents
United States Patent and Trademark Office
P.O. Box 1450
Alexandria, VA 22313-1450
www.uspto.gov

In re Patent No. 6110429
Issue Date: August 29,2000
Application No. 08967560
Filed: November 12,1997
Attorney Docket No. 1475JB-28528

:
:DECISION GRANTING PETITION
:UNDER 37 CFR 1.378(c)
:

This is a decision on the electronic petition, filed June 17,2009 ,under 37 CFR 1.378(c) to accept the unintentionally delayed payment of the 7.5 year maintenance fee for the above-identified patent.

The petition is **GRANTED**.

The maintenance fee is accepted, and the above-identified patent reinstated as of June 17,2009 .
This decision also constitutes notice that the fee has been accepted. An electronic copy of the petition and this decision has been created as an entry in the Image File Wrapper. Nevertheless, petitioner should print and retain an independent copy.

Telephone inquiries related to this electronic decision should be directed to the Electronic Business Center at 1-866-217-9197.

UNITED STATES DEPARTMENT OF COMMERCE
Patent and Trademark Office
ASSISTANT SECRETARY AND COMMISSIONER OF
PATENTS AND TRADEMARKS
Washington, D.C. 20231

Paper No. 6 #6

COPY MAILED

MAR 30 2000

SPECIAL PROGRAMS OFFICE
DAC FOR PATENTS

George F. Dvorak
Dvorak & Orum
53 West Jackson Blvd.
Chicago, IL 60604

In re Application of
Soren Jonsson
Application No. 08/968,034
Filed: November 12, 1997
Attorney Docket No. C-35890

: DECISION GRANTING
: PETITION

This is a decision on the petition filed November 30, 1998, as supplemented on March 22, 2000. In view of the supplement, the petition is being treated as a petition requesting that the application filed under 37 CFR 1.62 on November 12, 1997, be treated as an application filed under 37 CFR 1.53(b). A copy of the petition filed November 30, 1998, was filed by facsimile transmission on March 9, 1999. The Office sincerely apologizes for the delay in responding to the petition and any inconvenience caused petitioner by this delay.

The above-identified application was deposited on November 12, 1997 under former 37 CFR 1.62[1]. The filing included a form requesting a "continuing" application under 37 CFR 1.62, as well as a complete, new specification and new drawings.

This is not a proper filing under 37 CFR 1.62. An application filed pursuant to 37 CFR 1.62 uses the specification and drawings from the prior application. Changes to the application must be made in the form of an amendment. In this application, the request as filed was accompanied by a complete new set of application papers. See 37 CFR 1.62(e).

On September 22, 1998, a "Notice of Improper FWC Filing Under 37 CFR 1.62" was mailed stating that the application was improper and had not been granted a filing date since a specification was included.

The application is improper under 37 CFR 1.62 for a second reason. The application was deposited on November 12, 1997, as a 37 CFR 1.62 application, i.e., a file wrapper continuing application (FWC), of prior application No. 08/734,817. However, application No. 08/734,817 was abandoned on September 24, 1997, since a non-final Office action was mailed on June 23, 1997, setting a three

[1] 37 CFR 1.62 was deleted from title 37 of the Code of Federal Regulation effective December 1, 1997. See Notice of Final Rule, 62 Fed. Reg. 53132 (October 10, 1997).

month shortened statutory period for response, and no extension of time was filed in the prior application. In this regard, it is noted that while a "REQUEST FOR EXTENSION IN THE TERM FOR RESPONSE" was filed November 11, 1997, requesting a two month extension, this paper was directed to the continuation-in-part application (i.e., the FWC). A petition for an extension of time must be filed as a separate paper directed toward and filed in the application to which it pertains. See MPEP 201.06 (b) and 710.02(e). Therefore, the petition for extension of time filed in the FWC application was not effective to extend the period for response set by the non-final Office action mailed June 23, 1997, in prior application No. 08/734,817 and the prior application became abandoned on September 24, 1997, prior to the date of deposit of application No. 08/968,034. A two month extension of time fee of $200.00 was erroneously applied to application No. 08/734,817. This fee will credited to counsel's deposit account No. 04-2219 as authorized.

This is not a proper filing under 37 CFR 1.62. An application filed under 37 CFR 1.62 must be filed "before the payment of the issue fee, abandonment of, or termination of proceedings on the prior application." Obviously, that was not done in this case. Accordingly, the request for an application under 37 CFR 1.62 based on prior application No. 08/734,817 filed on November 12, 1997 is improper.

The petition filed November 30, 1998, erroneously stated that the application was improper because a new specification which included new matter was submitted and a marked up copy showing the additions was not included on filing. The petition was accompanied by a preliminary amendment and a marked up copy of the specification. In fact, as noted above, the application was improper because it included a new specification, not because the specification was not accompanied by a marked up copy.

In response to a telephone call by the undersigned to applicant's attorney, a supplement to the petition was filed on March 22, 2000 in which petitioner, in effect, requests that the application be treated as an application filed under 37 CFR 1.53(b). Therefore, the petition is being construed as a petition requesting that the application filed on November 12, 1997, under 37 CFR 1.62 be treated as an application filed under 37 CFR 1.53(b) and be accorded a filing date of November 12, 1997.

As so construed, the petition is granted.

It is noted that the supplement to the petition filed March 22, 2000, indicates that the application is a continuation-in-part application. However, the present application may **not** claim status as a continuation (including a continuation-in-part) or divisional application of prior application No. 08/734,817, since copendency has not been established. See 35 U.S.C. §§ 120 and 121. If applicants desire to claim the benefit of prior application No. 08/734,817 under 35 U.S.C. § 120 in the present application, then appropriate steps must be promptly taken pursuant to 37 CFR 1.137 to revive prior application No. 08/734,817 to establish copendency between application No. 08/734,817 and the present application. Inquiries regarding petitions to revive should be directed to the Office of Petitions staff at (703) 305-9282.

Upon review of the record, no oath or declaration in compliance with 37 CFR 1.63 has been located among the application papers filed November 12, 1997. Therefore, an executed oath or declaration in compliance with 37 CFR 1.63 and identifying the specification to which it is

directed by application number and filing date is required. The surcharge under 37 CFR 1.16(e) is also required.

Applicant is given **ONE MONTH** from the date of this decision to file the necessary oath or declaration and the surcharge in order to avoid abandonment of the application. This time period may be extended pursuant to 37 CFR 1.136(a). The response should be directed to the attention of Initial Patent Examination Division.

The preliminary amendment filed November 30, 1998 will be entered in due course and must be considered by the examiner for entry of new matter not described in the specification as originally filed. 35 USC 112, first paragraph; 35 USC 132.

The application is being returned to Initial Patent Examination Division for further processing as an application under 37 CFR 1.53(b), not a FWC application under 37 CFR 1.62, with a filing date of November 12, 1997, using the application papers filed on November 12, 1997, and the declaration filed in response to this decision.

Telephone inquiries specific to this matter should be directed to the undersigned at (703)306-5586.

Eugenia A. Jones

Eugenia A. Jones
Legal Advisor
Special Program Law Office
Office of the Deputy Assistant Commissioner
for Patent Policy and Projects

26 MAR 2003

UNITED STATES PATENT AND TRADEMARK OFFICE

COMMISSIONER FOR PATENTS
UNITED STATES PATENT AND TRADEMARK OFFICE
WASHINGTON, D.C. 20231
www.uspto.gov

MERCHANT & GOULD
PO Box 2903
Minneapolis, MN 55402-0903

#25

In re Application of:	:	
JONSSON, Soren	:	
U.S. Application No.: 08/968,034	:	DECISION
Filing Date: 12 November 1997	:	
Attorney's Docket No.: C-35890	:	
For: METHOD AND DEVICE FOR FEEDING COMPONENTS FOR BONE CEMENT INTO A MIXING VESSEL FOR THESE	:	

This decision is issued in response to applicant's "Petition To Treat November 13 1995 Application Filing As A Filing Under 35 U.S.C. 111(a)" filed 01 October 2002.

BACKGROUND

The present application is a Continuation-In-Part ("CIP") of U.S. application 08/734,817, which was a CIP of U.S. application 08/545,591 ('591). The '591 application is a national stage of international application PCT/SE94/00415, processed under 35 U.S.C. 371.

On 29 January 1996, the DO/EO/US mailed a Notification Of Acceptance (Form PCT/DO/EO/903) clearly indicating that the '591 application had been treated as a filing under 35 U.S.C. 371.

On 21 March 1997, the USPTO mailed an Office Action in the '591 application which specifically stated that the substitute specification filed with the '591 national stage application was **not** entered because of the presence of new matter.

On 01 October 2002, applicant filed the petition considered herein. The petition seeks to have the '591 application treated as a filing under 35 U.S.C. 111(a), rather than 35 U.S.C. 371, and requests that the substitute specification filed on 13 November 1995 be considered as part of the original application papers and accorded a 13 November 1995 filing date.

DISCUSSION

37 CFR 1.181(f) states the following with respect to petitions to the Commissioner:

> Any petition under this part not filed within two months of the mailing date of the action or notice from which relief is requested may be

dismissed as untimely, except as otherwise provided. This two month period is not extendable

Here, applicants were on notice at least from the mailing of the Form PCT/DO/EO/903 on 29 January 1996 that the '591 application had been processed as an application under 35 U.S.C. 371, and the Office Action mailed 21 March 1997 expressly stated that the substitute specification would not be entered because of new matter.

The present petition was not filed until nearly six years after the mailing of the Office Action from which relief is requested. Based on the nearly six year delay, the present petition is considered untimely.

Applicants are also advised that treatment of the '591 application as a filing under 35 U.S.C. 111(a) would not entitle applicants to obtain benefit/priority in the present application to PCT/SE94/00415 and the Swedish priority application claimed therein, as the requirements under 35 U.S.C. 119(a)-(d) and 120, 37 CFR 1.55, and 37 CFR 1.78 have not been complied with.

CONCLUSION

Applicant's petition is **DISMISSED** without prejudice.

Please direct further correspondence with respect to this matter to the Assistant Commissioner for Patents, Box PCT, Washington, D.C. 20231, and address the contents of the letter to the attention of the International Division, Legal Staff.

Boris Milef
PCT Legal Examiner
PCT Legal Office

Richard M. Ross
PCT Petitions Attorney
PCT Legal Office
Telephone: (703) 308-6155
Facsimile: (703) 308-6459

RMR/BM:rmr

28 SEP 2004

UNITED STATES PATENT AND TRADEMARK OFFICE

Commissioner for Patents
United States Patent and Trademark Office
P.O. Box 1450
Alexandria, VA 22313-1450
www.uspto.gov

#30 / Decision on Petition TGS

James A. Larson
MERCHANT & GOULD
PO Box 2903
Minneapolis, MN 55402-0903

In re Application of: JONSSON, Soren U.S. Application No.: 08/545,591 Filing Date: 13 November 1995 For: METHOD AND DEVICE FOR FEEDING COMPONENTS FOR BONE CEMENT INTO A MIXING VESSEL FOR THESE	DECISION ON PETITION UNDER 37 CFR 1.182

This decision is in response to applicant's "Request For Reconsideration Of Petition Under 37 CFR 1.183" filed 16 May 2003, which has been treated as a petition under 37 CFR 1.182.[1] Deposit Account No. 13-2725 will be charged the required petition fee. Applicant's "Petition Under 37 CFR 1.182" filed in the present application, 08/545,591, on 04 May 2004, requesting entry of an amendment to the instant application for purposes of obtaining benefit under 35 U.S.C. 120 and 365(c) to international application PCT/SE94/00415, is being treated in a concurrently mailed decision in application number 08/734,817.

BACKGROUND

The background herein was set forth in the decision mailed by this Office on 26 March 2003 (in grandchild application 08/968,034). In that decision, this Office dismissed as untimely applicant's request to have the present national stage application, 08/545,591, treated as a filing under 35 U.S.C. 111(a).

On 16 May 2003, applicant filed the "Request For Reconsideration Of Petition Under 37 CFR 1.183" considered herein, under 37 CFR 1.182.

On 04 May 2004, applicant filed the "Petition Under 37 CFR 1.182" to amend the present application, also considered herein.

DISCUSSION

Applicant argues that, under standard USPTO procedures in place at the time, the conflicting instructions contained in the papers filed to initiate U.S. application 08/545,591

[1] This petition was filed in grandchild application 08/968,034. Because the petition relates to the status of the present application, 08/545,591, the decision is issued herein.

should have resulted in this submission being treated under 35 U.S.C. 111(a), rather than under 35 U.S.C. 371. Applicant is correct that it is USPTO policy to treat national stage filings with conflicting instructions as filings under 35 U.S.C. 111(a) (see 37 CFR 1.495(g) and MPEP § 1893.03(a)), and a review of application 08/545,591 confirms that there were conflicting instructions in the materials filed by applicant on 13 November 1995 to initiate this application. Specifically, the 13 November 1995 submission included a "Voluntary Preliminary Amendment" which requested entry of a "revised specification that includes new matter and will take the actual date of filing and not the international filing date" and which characterized the submission as "in the nature of a continuation in part filing." Accordingly, the present application, filed on 13 November 1995 and accorded U.S. application number 08/545,591, will be treated as a filing under 35 U.S.C. 111(a) using the "revised" specification and additional figures (Figures 7-13) as identified in the "Voluntary Preliminary Amendment" filed 13 November 1995 as the specification and drawings for the present application.

CONCLUSION

Applicant's petition under 37 CFR 1.182 requesting that the present application, 08/545,591, be treated as a filing under 35 U.S.C. 111(a) rather than as the national stage application of PCT/SE94/00415 under 35 U.S.C. 371, is **GRANTED**. Accordingly, the "Notification Of Acceptance Of Application Under 35 U.S.C. 371" mailed 29 January 1996 in 08/545,591 is hereby **VACATED**. The instant application has a filing date of 13 November 1995 under 35 U.S.C. 111(a).

A copy of this decision will be placed in grandchild application 08/968,034 (the application in which the present petition was originally filed).

This application is being forwarded to the Office Of Initial Patent Examination for any further processing deemed necessary using the revised 13 page specification and Figures 1-13 filed 13 November 1995. The application remains abandoned.

Boris Milef
PCT Legal Examiner
PCT Legal Office

Richard M. Ross
PCT Petitions Attorney
PCT Legal Office
Telephone: (703) 308-6155
Facsimile: (703) 308-6459

RMR/BM:rmr

UNITED STATES PATENT AND TRADEMARK OFFICE

Commissioner for Patents
United States Patent and Trademark Office
P. O. Box 1450
Alexandria, VA 22313-1450
www.uspto.gov

Paper No.

MILA KASAN, PATENT DEPT.
APPLIED BIOSYSTEMS
850 LINCOLN CENTRE DRIVE
FOSTER CITY, CA 94404

COPY MAILED

JUL 1 6 2003

OFFICE OF PETITIONS

In re Application of
Russell G. Higuchi
Application No. 08/968,208
Filed: November 12, 1997
Attorney Docket No. 9397

ON PETITION

This is a decision on the petition, filed July 15, 2003, under 37 CFR 1.313(c)(2) to withdraw the above-identified application from issue after payment of the issue fee.

The petition is **GRANTED**.

The above-identified application is withdrawn from issue for consideration of a submission under 37 CFR 1.114 (request for continued examination). See 37 CFR 1.313(c)(2).

Petitioner is advised that the issue fee paid on March 17, 2003 in the above-identified application cannot be refunded. If, however, the above-identified application is again allowed, petitioner may request that it be applied towards the issue fee required by the new Notice of Allowance.[1]

Telephone inquiries should be directed to Irvin Dingle at (703) 306-5684.

After receipt of the file in the Office of Petitions, the file will be forwarded to Technology Center AU 1743 for processing of the request for continued examination under 37 CFR 1.114 and for consideration of the concurrently filed Information Disclosure Statement.

Irvin Dingle
Petitions Examiner
Office of Petitions
Office of the Deputy Commissioner
for Patent Examination Policy

---

[1] The request to apply the issue fee to the new Notice may be satisfied by completing and returning the new Issue Fee Transmittal Form PTOL-85(b), which includes the following language thereon: "Commissioner for Patents is requested to apply the Issue Fee and Publication Fee (if any) or re-apply any previously paid issue fee to the application identified above." Petitioner is advised that, whether a fee is indicated as being due or not, the Issue Fee Transmittal Form **must** be completed and timely submitted to avoid abandonment. Note the language in bold text on the first page of the Notice of Allowance and Fee(s) Due (PTOL-85).

UNITED STATES PATENT AND TRADEMARK OFFICE

Commissioner for Patents
United States Patent and Trademark Office
P. O. Box 1450
Alexandria, VA 22313-1450
www.uspto.gov

Paper No. _____

Date : July 16, 2003

TO : Director, Office of Patent Publication

FROM : Office of the Deputy Commissioner for Patent Examination Policy

SUBJECT : Withdrawal from Issue of Application No. 08/968,208

Applicant(s) : Russell G. Higuchi
Application No. : 08/968,208
Filed : November 12, 1997

The above-identified application has been assigned Patent No. 6,599,478 and an issue date of July 29, 2003.

It is hereby directed that this application be withdrawn from issue at the request of the applicant.

Do not refund the issue fee.

The following erratum should be published in the Official Gazette if the above-identified application is published in the OG of July 29, 2003:

> "All reference to Patent No. 6,599,478 to Russell G. Higuchi of California for INSTRUMENT FOR MONITORING NUCLEIC ACID AMPLIFICATION appearing in the Official Gazette of July 29, 2003 should be deleted since no patent was granted."

Irvin Dingle
Petitions Examiner
Office of Petitions
Office of the Deputy Commissioner
for Patent Examination Policy

cc: Geraldine Dozier, Crystal Park 3-441 (FAX-306-2737)
Deneise Boyd, Crystal Park 2, Suite 1100 (FAX-308-5413)
Mary Louise McAskill, Crystal Park 3-910 (FAX 305-4372)
Niomi Farmer, Crystal Park 3-910 (FAX-305-4372)
Mary E. Johnson (Cookie), P/OCS, CM1-6D07
Duane Davis (CDS), CM1-6A07
Tamara K. Greene, PK3-910

UNITED STATES PATENT AND TRADEMARK OFFICE

COMMISSIONER FOR PATENTS
UNITED STATES PATENT AND TRADEMARK OFFICE
P.O. BOX 1450
ALEXANDRIA, VA 22313-1450
www.uspto.go

FINNEGAN, HENDERSON, FARABOW, GARRETT & DUNNER
LLP
901 NEW YORK AVENUE, NW
WASHINGTON DC 20001-4413

COPY MAILED

MAY 2 5 2006

OFFICE OF PETITIONS

In re Application of	:
Garbe et al.	:
Application No. 08/968,519	: Decision on Petition for
Filed: November 12, 1997	: Patent Term Extension
Attorney Docket No. 3196.0014-00	:
For: MATRIX FOR TRANSDERMAL DRUG	:
DELIVERY	:

The above-identified application has been forwarded to the undersigned for consideration on the "Petition For Patent Term Adjustment Due To Examination Delay Under 37 CFR 1.181" received on December 27, 2005. The petition is being treated under 37 CFR 1.181 and 37 CFR 1.701, as a petition for patent term extension.

The petition under 37 CFR 1.181 is granted.

Petitioner notes that the above-identified application was filed on November 12, 1997, and allowed on October 6, 2005, but issuance was delayed due to interference proceedings. Petitioner contends that an interference was declared on November 9, 1998, a favorable decision by the Board of Patent Appeals and Interferences (BPAI) was mailed on December 21, 2000, but that that decision was appealed to the U.S. District Court for the District of Columbia, which dismissed the § 146 action on December 10, 2003 and that the period of appeal the district courts judgment to the U.S. Court of Appeals for the Federal Circuit expired on January 9, 2004. Petitioner contends the patent term extension should be **5 years** for the period from November 9, 1998, the date of the declaration of the interference to January 9, 2004; the date the time period to appeal the district courts decision expired.

35 U.S.C. § 154(b)(as amended by the "Uruguay Round Agreements Act," enacted December 8, 1994, as part of Public Law 103-465) provides for patent term extension for appellate review, interference and secrecy order delays in applications filed on or after June 8, 1995 and before May 29, 2000. 35 U.S.C. § 154(b)(as amended by the "American Inventors Protection Act of 1999," enacted November 29, 1999, as part of Public Law 106-113) provides for patent term adjustment for these administrative delays and others in applications filed on or after May 29, 2000. The patent statute only permits extension of patent term based on very specific criteria. The Office has no authority to grant any extension or adjustment of the term due to administrative delays except as authorized by 35 U.S.C. § 154.

The above-identified application was filed on November 12, 1997. Accordingly it is entitled to patent term extension based upon the conditions in 35 U.S.C. § 154(b), in effect on June 8, 1995. The provisions of 35 U.S.C. § 154(b) in effect on May 29, 2000 do not apply, because the amended version of 35 U.S.C. § 154(b) only applies to applications filed on or after May 29, 2000. Pursuant to 35 U.S.C. § 154(b), in effect on June 8, 1995, an applicant can receive patent term extension only if there was an appellate review, interference or a secrecy order delays as set forth in the statute.

According to 37 CFR 1.701(c)(1)(i), the application is entitled to patent term extension for the number of days, in the period beginning on the date the interference was declared to involve the application in the interference and ending on the date that the interference was terminated with respect to the application. According to 37 CFR 1.661, after a final decision by the Board is entered, an interference is considered terminated when no appeal or other review has been or can be taken. As a result, the period of extension is 1826 days or five years, the period from November 9, 1998, the date of the declaration of interference to January 9, 2004, including the beginning and end dates.

After mailing of this decision, the above-identified application will be forwarded to Office of Publications for further processing. The patent, if issued, will include an indication that the patent term is extended by **5 years.**

Petitioner's deposit account has not been charged a petition fee.

Telephone inquiries with regard to this communication should be directed to Mark O. Polutta at (571) 272-7709.

Mark O. Polutta
Senior Legal Advisor
Office of Patent Legal Administration
Office of the Deputy Commissioner
for Patent Examination Policy

SPE RESPONSE FOR CERTIFICATE OF CORRECTION

DATE : 10/23/06

Paper No.: _____

TO SPE OF : ART UNIT 1616

SUBJECT : Request for Certificate of Correction for Appl. No.: 8/968519 Patent No.: 7097853 B1

Please respond to this request for a certificate of correction within 7 days.

Please review the requested changes/corrections as shown in the **COCIN** document(s) in the IFW application image. No new matter should be introduced, nor should the scope or meaning of the claims be changed.

Please complete the response (see below) and forward the completed response to scanning using document code **COCX**.

Virginia Tolbert
Certificates of Correction Branch

703-308-9390 ext. 113

Thank You For Your Assistance

The request for issuing the above-identified correction(s) is hereby:
Note your decision on the appropriate box.

- ☑ **Approved** — **All** changes apply.
- ☐ **Approved in Part** — Specify below which changes **do not** apply.
- ☐ **Denied** — State the reasons for denial below.

Comments: _____

JOHANN RICHTER
SUPERVISORY PATENT EXAMINER
GROUP 1600

SPE

1616
Art Unit

UNITED STATES PATENT AND TRADEMARK OFFICE

CERTIFICATE OF CORRECTION

PATENT NO. : 7,097,853 B1
APPLICATION NO. : 08/968519
DATED : August 29, 2006
INVENTOR(S) : James E. Garbe

It is certified that error appears in the above-identified patent and that said Letters Patent is hereby corrected as shown below:

Title Page
Other Publications, Line 50, Delete "Functionality" and insert in place thereof -- Functionally -- ;

Title Page 3
Column 2, Line 25, Delete "Dependant" and insert in place thereof -- Defendant -- ;

Title Page 3
Column 1, Line 9, Insert the word -- by -- in between the words "Submission" and "Adhesives";

Title Page 3
Column 1, Line 24, Delete "Join" and insert in place thereof -- Joint -- ;

Title Page 3
Column 1, Line 5, Delete "Dependant" and insert in place thereof -- Defendant -- ;

Column 3
Line 9, Delete "isobomyl" and insert in place thereof -- isobornyl -- ;

Column 3
Line 35, Delete "furfryl" and insert in place thereof -- furfuryl -- ;

Column 3
Line 36, Delete "furfryl" and insert in place thereof -- furfuryl -- ;

Column 3
Line 37, Delete "tetrahydrofurfryl" and insert in place thereof -- tetrahydrofurfuryl -- ;

Column 6
Line 43, Delete "$5x10^{314}$" and insert in place thereof -- $5x10^{-4}$-- ;

Column 8
Line 37, after "Krampe" delete "at" and insert in place thereof -- et -- ;

Column 10
Line 54, Delete "(1L/rnin)" and insert in place thereof -- (1L/min) -- ;

Column 13
Line 65-66, Delete "macromononier" and insert in place thereof -- macromonomer -- ;

UNITED STATES PATENT AND TRADEMARK OFFICE

CERTIFICATE OF CORRECTION

PATENT NO. : 7,097,853 B1
APPLICATION NO. : 08/968519
DATED : August 29, 2006
INVENTOR(S) : James E. Garbe

It is certified that error appears in the above-identified patent and that said Letters Patent is hereby corrected as shown below:

Column 14
Line 17, Delete "solvvent" and insert in place thereof -- solvent -- ;

Column 14
Line 18, Delete "monmers." and insert in place thereof -- monomers. -- ;

Column 17-18, Table 3
Example Number 80, Delete "LPM" and insert in please thereof -- IPM --;

Column 17-18, Table 3
Example Number 81, delete "5I/34/15" and insert in place thereof -- 51/34/15 -- ;

Column 17-18, Table 3
Example Number 81, Delete "LPM" and insert in place thereof -- IPM -- ;

Column 17-18, Table 3
Example Number 83, Delete "IOA/HEAIPMMAMac*" and insert in place thereof -- IOA/HEA/PMMAMac* -- ;

Column 17-18, Table 3
Example Number 87, Delete "IOA/HEAIPMMAMac*" and insert in place thereof -- IOA/HEA/PMMAMac* -- ;

Column 17-18, Table 3
Example Number 89, Delete "IOA/HEAIPMMAMac*" and insert in place thereof -- IOA/HEA/PMMAMac* -- ;

Column 19-20, Table 3
Example Number 92, Delete "IOA/HEAIPSMac*" and insert in place thereof -- IOA/HEA/PSMac* -- ;

Column 19-20, Table 4
Line 40, Insert --) -- after "cm^2/dyne" ;

Column 19-20, Table 4
Example Number 111, Delete "IOAIHEA/PMMAMac*" and insert in place thereof -- IOA/HEA/PMMAMac* -- ;

Column 19-20, Table 4
Example Number 114, Delete "54/36/IO" and insert in place thereof -- 54/36/10 -- ;

UNITED STATES PATENT AND TRADEMARK OFFICE

CERTIFICATE OF CORRECTION

PATENT NO. : 7,097,853 B1
APPLICATION NO. : 08/968519
DATED : August 29, 2006
INVENTOR(S) : James E. Garbe

It is certified that error appears in the above-identified patent and that said Letters Patent is hereby corrected as shown below:

Column 19-20, Table 4
Example Number 123, Delete "57/3815" and insert in place thereof -- 57/38/15 -- ;

Column 19-20, Table 4
Example Number 123, Delete "IOA/HEAIPMMAMac*" and insert in place thereof -- IOA/HEA/PMMAMac* -- ;

Column 19-20, Table 4
Example Number 126, Delete "IOAIHEA/PMMAMac*" and insert in place thereof -- IOA/HEA/PMMAMac* -- ;

Column 19-20, Table 4
Example Number 127, Delete "IOAIHEA/PMMAMac*" and insert in place thereof -- IOA/HEA/PMMAMac* -- ;

Column 21
Line 3, Delete "IOA/IDMACM/" and insert in place thereof -- IOA/DMACM/ -- ;

Column 21
Line 12, After "2" delete "mi" and insert in place thereof -- minutes at -- ;

Column 23-24, Table 5
Ex No. 164, Delete "6O/15/15/10" and insert in place thereof -- 60/15/15/10 -- ;

Column 23-24, Table 5
Ex No. 174, Delete "1.0" and insert in place thereof -- 1.1 -- ;

Column 23-24, Table 5
Ex No. 177, Delete "7.3 DIPA" and insert in place thereof -- 7.7 DIPA -- ;

Column 26
Line 45, Delete "tetrahydrofrfurly" and insert in place thereof -- tetrahydrofurfuryl -- ;

Column 26
Line 61, Delete "(381 ∞M)" and insert in place thereof -- (381 μM) -- ;

Column 28
Line 27, Delete "IOA/IVoAc/PSMac," and insert in place thereof -- IOA/VoAc/PSMac, -- ;

UNITED STATES PATENT AND TRADEMARK OFFICE

CERTIFICATE OF CORRECTION

PATENT NO. : 7,097,853 B1
APPLICATION NO. : 08/968519
DATED : August 29, 2006
INVENTOR(S) : James E. Garbe

It is certified that error appears in the above-identified patent and that said Letters Patent is hereby corrected as shown below:

Column 28
Line 43, Delete "EXAMPLE" and insert in place thereof -- EXAMPLES --;

Columns 27-28
Table 6, Line 57, Delete "$cm^{/2}$/dyne" and insert in place thereof -- cm^2/dyne--;

Columns 27-28
Table 6, Example Number C13, Delete "0.87" and insert in place thereof -- 1.02 --;

Columns 29-30
Table 6, Line 5, Delete "$cm^{/2}$/dyne" and insert in place thereof -- cm^2/dyne -- ;

Columns 29-30
Table 6, Example Number C14, Delete "1.02" and insert in place thereof -- 0.89 --;

Columns 29-30
Table 6, Example Number C16, Delete "IOA/VoAc/PMNAMac" and insert in place thereof -- IOA/VoAc/PMMAMac -- ;

Column 29
Line 67, After the word "equilibrate" insert the word -- at -- ;

Column 30
Lines 31-32, Delete "sprectrophotometry" and insert in place thereof
-- spectrophotmetry -- ;

Columns 31-32
Example Number 239[1], "IOA/HEA/PMMAMaC*" and insert in place thereof
-- IOA/HEA/PMMAMac* -- ;

Columns 31-32
Example Number 240[1], "IOA/HEA/PMMAMaC*" and insert in place thereof
-- IOA/HEA/PMMAMac* -- ;

Columns 31-32
Example Number 241[1], "IOA/HEA/PMMAMaC*" and insert in place thereof
-- IOA/HEA/PMMAMac* -- ;

Columns 31-32
Example Number 242[1], "IOA/HEA/PMMAMaC*" and insert in place thereof
-- IOA/HEA/PMMAMac* -- ;

UNITED STATES PATENT AND TRADEMARK OFFICE

CERTIFICATE OF CORRECTION

PATENT NO. : 7,097,853 B1
APPLICATION NO. : 08/968519
DATED : August 29, 2006
INVENTOR(S) : James E. Garbe

It is certified that error appears in the above-identified patent and that said Letters Patent is hereby corrected as shown below:

Columns 31-32
Example Number 243[1], "IOA/HEA/PMMAMaC*" and insert in place thereof -- IOA/HEA/PMMAMac* -- ;

Columns 31-32
Example Number 245[1], "IOA/HEA/PMMAMaC*" and insert in place thereof -- IOA/HEA/PMMAMac* -- ;

Columns 31-32
Example Number 246[1], "IOA/HEA/PMMAMaC*" and insert in place thereof -- IOA/HEA/PMMAMac*" -- ; .

Columns 31-32
Below Table 8, Delete "*PMMAac" and insert in place thereof -- PMMAMac -- ;

Column 32
Line 1, Delete "EXAMPLE" and insert in place thereof -- EXAMPLES -- ;

Signed and Sealed this

Twenty-fourth Day of April, 2007

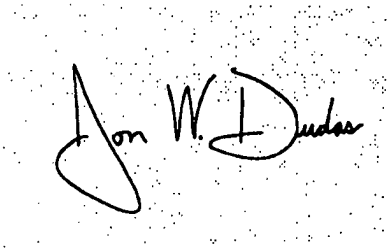

JON W. DUDAS
Director of the United States Patent and Trademark Office

Staple Here Only!

Printer's Trim Line

UNITED STATES PATENT AND TRADEMARK OFFICE

CERTIFICATE OF CORRECTION

PATENT NO.: 7097853

DATED: August 29, 2006

FIRST NAMED INVENTOR: GARBE, JAMES E.

It is certified that error appears in the above-identified patent and that said Letters Patent is hereby corrected as shown below:

Title Page
Other Publications, Line 50, Delete "Functionality" and insert in place thereof - - Functionally - - ;

Page 3
Column 2, Line 25, Delete "Dependant" and insert in place thereof - - Defendant - - ;

Page 3
Column 1, Line 9, Insert the word - - by - - in between the words "Submission" and "Adhesives";

Page 3
Column 1, Line 24, Delete "Join" and insert in place thereof - - Joint - - ;

Page 3
Column 1, Line 5, Delete "Dependant" and insert in place thereof - - Defendant - - ;

Column 3
Line 9, Delete "isobomyl" and insert in place thereof - - isobornyl - - ;

Column 3
Line 35, Delete "furfryl" and insert in place thereof - - furfuryl - - ;

Column 3
Line 36, Delete "furfryl" and insert in place thereof - - furfuryl - - ;

MAILING ADDRESS OF SENDER:

OFFICE OF INTELLECTUAL PROPERTY COUNSEL
3M INNOVATIVE PROPERTIES COMPANY
3M CENTER - P.O. BOX 33427
SAINT PAUL, MINNESOTA 55133-3427

PATENT NO. 7097853

No. of add'l copies: - 0-
@ 50¢ per page

No add'l copies

Staple Here Only!

Printer's Trim Line

UNITED STATES PATENT AND TRADEMARK OFFICE

CERTIFICATE OF CORRECTION

PATENT NO.: 7097853

DATED: August 29, 2006

FIRST NAMED INVENTOR: GARBE, JAMES E.

It is certified that error appears in the above-identified patent and that said Letters Patent is hereby corrected as shown below:

Column 3
Line 37, Delete "tetrahydrofurfryl" and insert in place thereof - - tetrahydrofurfuryl - - ;

Column 6
Line 43, Delete "$5x10^{314n}$" and insert in place thereof - - $5x10^{-4}$ - - ;

Column 8
Line 37, after "Krampe" delete "at" and insert in place thereof - - et - - ;

Column 10
Line 54, Delete "(1L/rnin)" and insert in place thereof - - (1L/min) - - ;

Column 13
Line 65-66, Delete "macromononier" and insert in place thereof - - macromonomer - - ;

Column 14
Line 17, Delete "solvvent" and insert in place thereof - - solvent - - ;

Column 14
Line 18, Delete "monmers." and insert in place thereof - - monomers. - - ;

Column 17-18, Table 3
Example Number 80, Delete "LPM" and insert in please thereof - - IPM - -;

MAILING ADDRESS OF SENDER:

OFFICE OF INTELLECTUAL PROPERTY COUNSEL
3M INNOVATIVE PROPERTIES COMPANY
3M CENTER - P.O. BOX 33427
SAINT PAUL, MINNESOTA 55133-3427

PATENT NO. 7097853

No. of add'l copies: -0-
@ 50¢ per page

No add'l copies

Staple Here Only!

Printer's Trim Line

UNITED STATES PATENT AND TRADEMARK OFFICE

CERTIFICATE OF CORRECTION

PATENT NO.: 7097853

DATED: August 29, 2006

FIRST NAMED INVENTOR: GARBE, JAMES E.

It is certified that error appears in the above-identified patent and that said Letters Patent is hereby corrected as shown below:

Column 17-18, Table 3
Example Number 81, delete "5I/34/15" and insert in place thereof - - 51/34/15 - - ;

Column 17-18, Table 3
Example Number 81, Delete "LPM" and insert in place thereof - - IPM - - ;

Column 17-18, Table 3
Example Number 83, Delete "IOA/HEAIPMMAMac*" and insert in place thereof - - IOA/HEA/PMMAMac* - - ;

Column 17-18, Table 3
Example Number 87, Delete "IOA/HEAIPMMAMac*" and insert in place thereof - - IOA/HEA/PMMAMac* - - ;

Column 17-18, Table 3
Example Number 89, Delete "IOA/HEAIPMMAMac*" and insert in place thereof - - IOA/HEA/PMMAMac* - - ;

Column 19-20, Table 3
Example Number 92, Delete "IOA/HEAIPSMac*" and insert in place thereof - - IOA/HEA/PSMac* - - ;

Column 19-20, Table 4
Line 40, Insert - -) - - after "cm^2/dyne" ;

MAILING ADDRESS OF SENDER:

OFFICE OF INTELLECTUAL PROPERTY COUNSEL
3M INNOVATIVE PROPERTIES COMPANY
3M CENTER - P.O. BOX 33427
SAINT PAUL, MINNESOTA 55133-3427

PATENT NO. 7097853

No. of add'l copies: -0-
@ 50¢ per page

No add'l copies

Staple Here Only! | Printer's Trim Line

UNITED STATES PATENT AND TRADEMARK OFFICE

CERTIFICATE OF CORRECTION

PATENT NO.: 7097853

DATED: August 29, 2006

FIRST NAMED INVENTOR: GARBE, JAMES E.

It is certified that error appears in the above-identified patent and that said Letters Patent is hereby corrected as shown below:

Column 19-20, Table 4
Example Number 111, Delete "IOAIHEA/PMMAMac*" and insert in place thereof - - IOA/HEA/PMMAMac* - - ;

Column 19-20, Table 4
Example Number 114, Delete "54/36/IO" and insert in place thereof - - 54/36/10 - - ;

Column 19-20, Table 4
Example Number 123, Delete "57/3815" and insert in place thereof - - 57/38/15 - - ;

Column 19-20, Table 4
Example Number 123, Delete "IOA/HEAIPMMAMac*" and insert in place thereof - - IOA/HEA/PMMAMac* - - ;

Column 19-20, Table 4
Example Number 126, Delete "IOAIHEA/PMMAMac*" and insert in place thereof - - IOA/HEA/PMMAMac* - - ;

Column 19-20, Table 4
Example Number 127, Delete "IOAIHEA/PMMAMac*" and insert in place thereof - - IOA/HEA/PMMAMac* - - ;

Column 21
Line 3, Delete "IOA/IDMACM/" and insert in place thereof - - IOA/DMACM/ - - ;

MAILING ADDRESS OF SENDER:

OFFICE OF INTELLECTUAL PROPERTY COUNSEL
3M INNOVATIVE PROPERTIES COMPANY
3M CENTER - P.O. BOX 33427
SAINT PAUL, MINNESOTA 55133-3427

PATENT NO. 7097853

No. of add'l copies: - 0-
@ 50¢ per page

No add'l copies

Staple Here Only!

Printer's Trim Line

UNITED STATES PATENT AND TRADEMARK OFFICE

CERTIFICATE OF CORRECTION

PATENT NO.: 7097853

DATED: August 29, 2006

FIRST NAMED INVENTOR: GARBE, JAMES E.

It is certified that error appears in the above-identified patent and that said Letters Patent is hereby corrected as shown below:

Column 21
Line 12, After "2" delete "mi" and insert in place thereof - - minutes at - - ;

Column 23-24, Table 5
Ex No. 164, Delete "6O/15/15/10" and insert in place thereof - - 60/15/15/10 - - ;

Column 23-24, Table 5
Ex No. 174, Delete "1.0" and insert in place thereof - - 1.1 - - ;

Column 23-24, Table 5
Ex No. 177, Delete "7.3 DIPA" and insert in place thereof - - 7.7 DIPA - - ;

Column 26
Line 45, Delete "tetrahydrofrfurly" and insert in place thereof - - tetrahydrofurfuryl - - ;

Column 26
Line 61, Delete "(381 ∞M)" and insert in place thereof - - (381 μM) - - ;

Column 28
Line 27, Delete "IOA/IVoAc/PSMac," and insert in place thereof - - IOA/VoAc/PSMac, - - ;

Column 28
Line 43, Delete "EXAMPLE" and insert in place thereof - - EXAMPLES - - ;

MAILING ADDRESS OF SENDER:

OFFICE OF INTELLECTUAL PROPERTY COUNSEL
3M INNOVATIVE PROPERTIES COMPANY
3M CENTER - P.O. BOX 33427
SAINT PAUL, MINNESOTA 55133-3427

PATENT NO. 7097853

No. of add'l copies: -0-
@ 50¢ per page

No add'l copies

Staple Here Only!

Printer's Trim Line

UNITED STATES PATENT AND TRADEMARK OFFICE

CERTIFICATE OF CORRECTION

PATENT NO.: 7097853

DATED: August 29, 2006

FIRST NAMED INVENTOR: GARBE, JAMES E.

It is certified that error appears in the above-identified patent and that said Letters Patent is hereby corrected as shown below:

Columns 27-28
Table 6, Line 57, Delete "cm/^{2}/dyne" and insert in place thereof - - cm^2/dyne - - ;

Columns 27-28
Table 6, Example Number C13, Delete "0.87" and insert in place thereof - - 1.02 - - ;

Columns 29-30
Table 6, Line 5, Delete "cm/^{2}/dyne" and insert in place thereof - - cm^2/dyne - - ;

Columns 29-30
Table 6, Example Number C14, Delete "1.02" and insert in place thereof - - 0.89 - - ;

Columns 29-30
Table 6, Example Number C16, Delete "IOA/VoAc/PMNAMac" and insert in place thereof - - IOA/VoAc/PMMAMac - - ;

Column 29
Line 67, After the word "equilibrate" insert the word - - at - - ;

Column 30
Lines 31-32, Delete "sprectrophotometry" and insert in place thereof - - spectrophotmetry - - ;

MAILING ADDRESS OF SENDER:

OFFICE OF INTELLECTUAL PROPERTY COUNSEL
3M INNOVATIVE PROPERTIES COMPANY
3M CENTER - P.O. BOX 33427
SAINT PAUL, MINNESOTA 55133-3427

PATENT NO. 7097853

No. of add'l copies: - 0-
@ 50¢ per page

No add'l copies

Staple Here Only! | Printer's Trim Line

UNITED STATES PATENT AND TRADEMARK OFFICE

CERTIFICATE OF CORRECTION

PATENT NO.: 7097853

DATED: August 29, 2006

FIRST NAMED INVENTOR: GARBE, JAMES E.

It is certified that error appears in the above-identified patent and that said Letters Patent is hereby corrected as shown below:

Column 32
Line 1, Delete "EXAMPLE" and insert in place thereof - - EXAMPLES - - ;

Columns 31-32
Example Number 239[1], "IOA/HEA/PMMAMaC*" and insert in place thereof - - IOA/HEA/PMMAMac* - - ;

Columns 31-32
Example Number 240[1], "IOA/HEA/PMMAMaC*" and insert in place thereof - - IOA/HEA/PMMAMac* - - ;

Columns 31-32
Example Nubmer 241[1], "IOA/HEA/PMMAMaC*" and insert in place thereof - - IOA/HEA/PMMAMac* - - ;

Columns 31-32
Example Number 242[1], "IOA/HEA/PMMAMaC*" and insert in place thereof - - IOA/HEA/PMMAMac* - - ;

Columns 31-32
Example Number 243[1], "IOA/HEA/PMMAMaC*" and insert in place thereof - - IOA/HEA/PMMAMac* - - ;

Columns 31-32
Example Number 245[1], "IOA/HEA/PMMAMaC*" and insert in place thereof - - IOA/HEA/PMMAMac* - - ;

Columns 31-32
Example Number 246[1], "IOA/HEA/PMMAMaC*" and insert in place thereof - - IOA/HEA/PMMAMac* - - ;

MAILING ADDRESS OF SENDER:

OFFICE OF INTELLECTUAL PROPERTY COUNSEL
3M INNOVATIVE PROPERTIES COMPANY
3M CENTER - P.O. BOX 33427
SAINT PAUL, MINNESOTA 55133-3427

PATENT NO. 7097853

No. of add'l copies: -0-
@ 50¢ per page

No add'l copies

Staple Here Only! | Printer's Trim Line

UNITED STATES PATENT AND TRADEMARK OFFICE

CERTIFICATE OF CORRECTION

PATENT NO.: 7097853

DATED: August 29, 2006

FIRST NAMED INVENTOR: GARBE, JAMES E.

It is certified that error appears in the above-identified patent and that said Letters Patent is hereby corrected as shown below:

Columns 31-32
Below Table 8, Delete "*PMMAac" and insert in place thereof - - PMMAMac - - ;

MAILING ADDRESS OF SENDER:

OFFICE OF INTELLECTUAL PROPERTY COUNSEL
3M INNOVATIVE PROPERTIES COMPANY
3M CENTER - P.O. BOX 33427
SAINT PAUL, MINNESOTA 55133-3427

PATENT NO. 7097853

No. of add'l copies: - 0-
@ 50¢ per page

No add'l copies

SPE RESPONSE FOR CERTIFICATE OF CORRECTION

Paper No.: ___

DATE : 11/1/07

TO SPE OF : ART UNIT 1616

SUBJECT : Request for Certificate of Correction for Appl. No.: 8/968519 Patent No: 7097853 B1

A response is requested with respect to a request for a certificate of correction.

With respect to the change(s) requested to correct Office and/or Applicant's errors, should the patent read as shown in the certificate of correction attached herewith or the COCIN document(s), in IFW images for the above-identified patented application? No new matter should be introduced, nor should the scope or meaning of the claims be changed.

If the response is for an IFW, within 7 days, please complete and forward the response, to the employee (named below) via scanning into application images, using document code **COCX**.

If the response is for a paper file wrapper, please complete the response and forward the response with the paper file wrapper, to the employee (named below), within 7 days, to:

Certificates of Correction Branch (CofC)
South Tower - 9A22
Palm Location 7580

VIRGINIA TOLBERT
Certificates of Correction Branch

703-308-9390 ext. 113

Thank You For Your Assistance

The request for issuing the above-identified correction(s) is hereby:
Note your decision on the appropriate box.

- ☐ **Approved** — All changes apply.
- ☒ **Approved In Part** — Specify below which changes **do not** apply.
- ☐ **Denied** — State the reasons for denial below.

Comments: CHANGES IN CLAIM 1 COL. 33 LINES 13-19, CLAIM 19 COL. 35 LINES 20-26, CLAIM 32 COL. 36 LINES 57-65 DENIED BECAUSE THEY RAISE THE ISSUE OF WHETHER APPLICANTS ARE ENTITLED TO A BROADER SCOPE

JOHANN RICHTER
CONTRACT EXAMINER
SPE

1616
Art Unit

SPE RESPONSE FOR CERTIFICATE OF CORRECTION

Paper No.: _____

DATE : 6/23/09

TO SPE OF : ART UNIT 1616

SUBJECT : Request for Certificate of Correction for Appl. No.: 8/968519 Patent No.: 7097853B1

Please respond to this request for a certificate of correction within 7 days.

FOR IFW FILES:

Please review the requested changes/corrections as shown in the **COCIN** document(s) in the IFW application image. No new matter should be introduced, nor should the scope or meaning of the claims be changed.

Please complete the response (see below) and forward the completed response to scanning using document code **COCX**.

FOR PAPER FILES:

Please review the requested changes/corrections as shown in the attached certificate of correction. Please complete this form (see below) and forward it with the file to:

Certificates of Correction Branch (C of C)
Randolph Square 9D62-B
Palm Location 7580

Reconsideration Request

Virginia Tolbert
Certificates of Correction Branch
703-756-1591

Thank You For Your Assistance

The request for issuing the above-identified correction(s) is hereby:
Note your decision on the appropriate box.

- ☑ **Approved** — All changes apply.
- ☐ **Approved in Part** — Specify below which changes **do not** apply.
- ☐ **Denied** — State the reasons for denial below.

Comments: _____

JOHANN RICHTER
SUPERVISORY PATENT EXAMINER
GROUP 1600

Johann Richter — SPE
1616 — Art Unit

PTOL-306 (REV. 7/03) U.S. DEPARTMENT OF COMMERCE Patent and Trademark Office

UNITED STATES DEPARTMENT OF COMMERCE
Patent and Trademark Office
ASSISTANT SECRETARY AND COMMISSIONER OF
PATENTS AND TRADEMARKS
Washington, D.C 20231

Paper No. 49

C. JAMES BUSHMAN
BROWNING BUSHMAN
5718 WESTHEIMER STREET
SUITE 1800
HOUSTON , TX 77057

COPY MAILED

JAN - 6 2000

OFFICE OF PETITIONS
A/C PATENTS

In re Application of
Terry G. Young
Application No. 08/968,904
Filed: November 6, 1997
Attorney Docket No. Safoco01

ON PETITION

This is a decision on the petition under 37 CFR 1.137(b), filed by facsimile transmission on January 5, 2000, to revive the above-identified application.

The petition is **GRANTED**.

Telephone inquiries concerning this decision should be directed to the undersigned at (703) 305-8680. Any questions concerning the issuance of this application into a patent should be directed to Customer Services at (703) 308-6789.

The application file is being forwarded to Technology Center AU 3753 for appropriate action on the reply received January 5, 2000.

Frances Hicks

Frances Hicks
Lead Petitions Examiner
Office of Petitions
Office of the Deputy Assistant Commissioner
for Patent Policy and Projects

UNITED STATES DEPARTMENT OF COMMERCE
Patent and Trademark Office
ASSISTANT SECRETARY AND COMMISSIONER OF
PATENTS AND TRADEMARKS
Washington, D.C. 20231

Paper No. 49

C. JAMES BUSHMAN
BROWNING BUSHMAN
5718 WESTHEIMER STREET
SUITE 1800
HOUSTON , TX 77057

COPY MAILED
JAN - 6 2000

OFFICE OF PETITIONS
A/C PATENTS

In re Application of
Terry G. Young
Application No. 08/968,904
Filed: November 6, 1997
Attorney Docket No. Safoco01

ON PETITION

This is a decision on the petition under 37 CFR 1.137(b), filed by facsimile transmission on January 5, 2000, to revive the above-identified application.

The petition is **GRANTED**.

Telephone inquiries concerning this decision should be directed to the undersigned at (703) 305-8680. Any questions concerning the issuance of this application into a patent should be directed to Customer Services at (703) 308-6789.

The application file is being forwarded to Technology Center AU 3753 for appropriate action on the reply received January 5, 2000.

Frances Hicks
Frances Hicks
Lead Petitions Examiner
Office of Petitions
Office of the Deputy Assistant Commissioner
for Patent Policy and Projects

UNITED STATES PATENT AND TRADEMARK OFFICE

Commissioner for Patents
United States Patent and Trademark Office
P.O. Box 1450
Alexandria, VA 22313-1450
www.uspto.gov

In re Patent No. 5937405
Issue Date: August 10,1999
Application No. 08969134
Filed: November 12,1997
Attorney Docket No. KANG111537

:
:DECISION GRANTING PETITION
:UNDER 37 CFR 1.378(c)
:

This is a decision on the electronic petition, filed October 3,2007 ,under 37 CFR 1.378(c) to accept the unintentionally delayed payment of the 7.5 year maintenance fee for the above-identified patent.

The petition is GRANTED.

The maintenance fee is accepted, and the above-identified patent reinstated as of October 3,2007 . This decision also constitutes notice that the fee has been accepted. An electronic copy of the petition and this decision has been created as an entry in an Image File Wrapper. Nevertheless, petitioner should print and retain an independent copy

Telephone inquires related to this electronic decision should be directed to the Electronic Business Center at 1-866-217-9197.

Under the Paperwork Reduction Act of 1995, no persons are required to respond to a collection of information unless it displays valid OMB control number.

PETITION TO ACCEPT UNINTENTIONALLY DELAYED PAYMENT OF MAINTENANCE FEE IN AN EXPIRED PATENT (37 CFR 1.378(c))

Patent Number	Issue Date (YYYY-MM-DD)	Application Number	Filing Date (YYYY-MM-DD)	Docket Number (if applicable)
5937405	1999-08-10	08969134	1997-11-12	

CAUTION: Maintenance fee (and surcharge, if any) payment must correctly identify: (1) the patent number and (2) the application number of the actual U.S. application leading to issuance of that patent to ensure the fee(s) is/are associated with the correct patent. 37 CFR 1.366(c) and (d).

SMALL ENTITY
☒ Patentee claims, or has previously claimed, small entity status. See 37 CFR 1.27.

LOSS OF ENTITLEMENT TO SMALL ENTITY STATUS
☐ Patentee is no longer entitled to small entity status. See 37 CFR 1.27(g)

NOT Small Entity		Small Entity	
Fee	Code	Fee	Code
○ 3 ½ year	(1551)	○ 3 ½ year	(2551)
○ 7 ½ year	(1552)	◉ 7 ½ year	(2552)
○ 11 ½ year	(1553)	○ 11 ½ year	(2553)

SURCHARGE
The surcharge required by 37 CFR 1.20(i)(2) (Fee Code 1558) must be paid as a condition of accepting unintentionally delayed payment of the maintenance fee.

MAINTENANCE FEE (37 CFR 1.20(e)-(g))
The appropriate maintenance fee must be submitted with this petition.

STATEMENT
THE UNDERSIGNED CERTIFIES THAT THE DELAY IN PAYMENT OF THE MAINTENANCE FEE TO THIS PATENT WAS UNINTENTIONAL

PETITIONER(S) REQUEST THAT THE DELAYED PAYMENT OF THE MAINTENANCE FEE BE ACCEPTED AND THE PATENT REINSTATED

THIS PORTION MUST BE COMPLETED BY THE SIGNATORY OR SIGNATORIES

37 CFR 1.378(d) states: "Any petition under this section must be signed by an attorney or agent registered to practice before the Patent and Trademark Office, or by the patentee, the assignee, or other party in interest."

I certify, in accordance with 37 CFR 1.4(d)(4) that I am

○ An attorney or agent registered to practice before the Patent and Trademark Office

○ A sole patentee

○ A joint patentee; I certify that I am authorized to sign this submission on behalf of all the other patentees.

○ A joint patentee; all of whom are signing this e-petition

◉ The assignee of record of the entire interest

The Assignee of record of the entire interest			
Under 37 CFR 3.71 an assignee becomes of record by filing a statement in compliance with 37 CFR 3.73(b). Signature requirements are set forth in 37 CFR 1.4(d), and the undersigned certifies that he / she is empowered to act on behalf of the assignee of the entire interest			
Signature	/R. David L. Campbell/	Date (YYYY-MM-DD)	2007-10-03
Name	R. David L. Campbell		
Enter Reel and Frame Number		Remove	
Reel Number	016800	Frame Number	0647
Enter Reel and Frame Number		Remove	
Reel Number	016674	Frame Number	0799
Enter Reel and Frame Number		Remove	
Reel Number	009490	Frame Number	0344
Click ADD for additional Reel Number and Frame Number		Add	

This collection of information is required by 37 CFR 1.378(c). The information is required to obtain or retain a benefit by the public which is to file (and by the USPTO to process) an application. Confidentiality is governed by 35 U.S.C. 122 and 37 CFR 1.11 and 1.14. This collection is estimated to take 1 hour to complete, including gathering, preparing, and submitting the completed application form to the USPTO. Time will vary depending upon the individual case. Any comments on the amount of time you require to complete this form and/ or suggestions for reducing this burden, should be sent to the Chief Information Officer, U.S. Patent and Trademark Office, U.S. Department of Commerce, P.O. Box 1450, Alexandria, VA 22313-1450. DO NOT SEND FEES OR COMPLETED FORMS TO THIS ADDRESS. **This form can only be used when in conjunction with EFS-Web. If this form is mailed to the USPTO, it may cause delays in reinstating the patent.**

Privacy Act Statement

The Privacy Act of 1974 (P.L. 93-579) requires that you be given certain information in connection with your submission of the attached form related to a patent application or patent. Accordingly, pursuant to the requirements of the Act, please be advised that: (1) the general authority for the collection of this information is 35 U.S.C. 2(b)(2); (2) furnishing of the information solicited is voluntary; and (3) the principal purpose for which the information is used by the U.S. Patent and Trademark Office is to process and/or examine your submission related to a patent application or patent. If you do not furnish the requested information, the U.S. Patent and Trademark Office may not be able to process and/or examine your submission, which may result in termination of proceedings or abandonment of the application or expiration of the patent.

The information provided by you in this form will be subject to the following routine uses:

1. The information on this form will be treated confidentially to the extent allowed under the Freedom of Information Act (5 U.S.C. 552) and the Privacy Act (5 U.S.C. 552a). Records from this system of records may be disclosed to the Department of Justice to determine whether the Freedom of Information Act requires disclosure of these record s.

2. A record from this system of records may be disclosed, as a routine use, in the course of presenting evidence to a court, magistrate, or administrative tribunal, including disclosures to opposing counsel in the course of settlement negotiations.

3. A record in this system of records may be disclosed, as a routine use, to a Member of Congress submitting a request involving an individual, to whom the record pertains, when the individual has requested assistance from the Member with respect to the subject matter of the record.

4. A record in this system of records may be disclosed, as a routine use, to a contractor of the Agency having need for the information in order to perform a contract. Recipients of information shall be required to comply with the requirements of the Privacy Act of 1974, as amended, pursuant to 5 U.S.C. 552a(m).

5. A record related to an International Application filed under the Patent Cooperation Treaty in this system of records may be disclosed, as a routine use, to the International Bureau of the World Intellectual Property Organization, pursuant to the Patent Cooperation Treaty.

6. A record in this system of records may be disclosed, as a routine use, to another federal agency for purposes of National Security review (35 U.S.C. 181) and for review pursuant to the Atomic Energy Act (42 U.S.C. 218(c)).

7. A record from this system of records may be disclosed, as a routine use, to the Administrator, General Services, or his/her designee, during an inspection of records conducted by GSA as part of that agency's responsibility to recommend improvements in records management practices and programs, under authority of 44 U.S.C. 2904 and 2906. Such disclosure shall be made in accordance with the GSA regulations governing inspection of records for this purpose, and any other relevant (i.e., GSA or Commerce) directive. Such disclosure shall not be used to make determinations about individuals.

8. A record from this system of records may be disclosed, as a routine use, to the public after either publication of the application pursuant to 35 U.S.C. 122(b) or issuance of a patent pursuant to 35 U.S.C. 151. Further, a record may be disclosed, subject to the limitations of 37 CFR 1.14, as a routine use, to the public if the record was filed in an application which became abandoned or in which the proceedings were terminated and which application is referenced by either a published application, an application open to public inspections or an issued patent.

9. A record from this system of records may be disclosed, as a routine use, to a Federal, State, or local law enforcement agency, if the USPTO becomes aware of a violation or potential violation of law or regulation.

UNITED STATES DEPARTMENT OF COMMERCE
Patent and Trademark Office
ASSISTANT SECRETARY AND COMMISSIONER
OF PATENTS AND TRADEMARKS
Washington, D.C. 20231

AUG 2 3 2001

Mailed:

BB
Paper Number 25

In re application of
Moungi Bawendi et al.
Serial No.08/969,302
Filed: November 13, 1997
For: HIGHLY LUMINESCENT COLOR-SELECTIVE MATERIALS

DECISION ON PETITION

This is a decision on the PETITION TO ACCEPT COLOR PHOTOGRAPHS, filed JANUARY 31, 2001, to permit entry of color photographs since 1) three sets of the photographs have been filed, 2) the specification contains the language set forth in C.F.R. 1.84 (A) (2) (IV), 3) the required fee has been paid under 37 C.F.R.1.17(I), and 4) an explanation is provided stating why color photographs are necessary. It is pointed out that the color drawing(s) are of Figure(s) 3.

A review of the application record indicates that all of the requirements for acceptance color photographs have been met.

The petition is **GRANTED**.

Christine Tierney
Special Program Examiner
Technology Center 1700

Fish & Richardson P.C.
225 Franklin Street
Boston, MA02110-2804

UNITED STATES PATENT AND TRADEMARK OFFICE

COMMISSIONER FOR PATENTS
UNITED STATES PATENT AND TRADEMARK OFFICE
WASHINGTON, D.C. 20231
www.uspto.gov

Paper No. 20

BIRCH STEWART KOLASCH & BIRCH
PO BOX 747
FALLS CHURCH, VA 22040-0747

COPY MAILED

JUL 10 2001

OFFICE OF PETITIONS
A/C PATENTS

ON PETITION

In re Application of :
Edgardo Poskus et al. :
Application No. 08/969,334 :
Filed: November 28, 1997 :
Attorney Docket No. 1197-0121P :

This is a decision on the petition under 37 CFR 1.137(b), filed June 12, 2001, to revive the above-identified application.

The petition is **DISMISSED**.

Any request for reconsideration of this decision must be submitted within TWO (2) MONTHS from the mail date of this decision. Extensions of time under 37 CFR 1.136(a) are permitted. The reconsideration request should include a cover letter entitled "Renewed Petition under 37 CFR 1.137(b)." This is **not** final agency action within the meaning of 5 U.S.C. § 704.

The above-identified application became abandoned for failure to reply within the meaning of 37 CFR 1.113 in a timely manner to the final Office action mailed November 8, 1999, which set a shortened statutory period for reply of three (3) months. No extensions of time under the provisions of 37 CFR 1.136(a) were obtained. Accordingly, the above-identified application became abandoned on February 9, 2000.

A grantable petition under 37 CFR 1.137(b)[1] must be accompanied by: (1) the required reply,[2] unless previously filed; (2) the petition fee as set forth in 37 CFR 1.17(m); (3) a statement that the entire delay in filing the required reply from the due date

---

[1] As amended effective December 1, 1997. See Changes to Patent Practice and Procedure; Final Rule Notice, 62 Fed. Reg. 53131, 53194-95 (October 10, 1997), 1203 Off. Gaz. Pat. Office 63, 119-20 (October 21, 1997).

[2] In a nonprovisional application abandoned for failure to prosecute, the required reply may be met by the filing of a continuing application. In an application or patent, abandoned or lapsed for failure to pay the issue fee or any portion thereof, the required reply must be the payment of the issue fee or any outstanding balance thereof.

for the reply until the filing of a grantable petition pursuant to 37 CFR 1.137(b) was unintentional; and (4) any terminal disclaimer (and fee as set forth in 37 CFR 1.20(d)) required by 37 CFR 1.137(c). Where there is a question as to whether either the abandonment or the delay in filing a petition under 37 CFR 1.137 was unintentional, the Commissioner may require additional information. See MPEP 711.03(c)(III)(C) and (D). The instant petition lacks items (1) and (3).

As to item (1), a petition to revive cannot be granted where there is an outstanding requirement. In the instant case, since the amendment submitted on June 12, 2001 does not prima facie places the application in condition for allowance, the reply requirement must be a Notice of Appeal (and appeal fee) or the filing of a continuation of application. Alternatively, the reply requirement may be met by the filing of a submission under 37 CFR 1.129(a) if the above-identified application is eligible for such transitional practice. Accordingly, the petition to revive cannot be granted until such time as the outstanding response requirement is received.

As to item (3), 37 CFR 1.137(b)(3) requires a statement that the entire delay in filing the required reply from the due date for the reply until the filing of a grantable petition pursuant to 37 CFR 1.137(b) was unintentional. If the statement contained in the instant petition varies from the language required by 37 CFR 1.137(b)(3), the statement contained in the instant petition is being construed as the statement required by 37 CFR 1.137(b)(3) and petitioner must notify the Office if this is **not** a correct interpretation of the statement contained in the instant petition.

Further correspondence with respect to this matter should be addressed as follows:

By mail: Assistant Commissioner for Patents
Box DAC
Washington, D.C. 20231

By facsimile: (703) 308-6916
Attn: Office of Petitions

By hand: Office of Petitions
2201 South Clark Place
Crystal Plaza 4, Suite 3C23
Arlington, VA 22202

Telephone inquiries concerning this decision should be directed to Wan Laymon at (703) 305-9282.

Wan Laymon

Wan Laymon
Petitions Examiner
Office of Petitions
Office of the Deputy Commissioner
for Patent Examination Policy

UNITED STATES PATENT AND TRADEMARK OFFICE

COMMISSIONER FOR PATENTS
UNITED STATES PATENT AND TRADEMARK OFFICE
WASHINGTON, D.C. 20231
www.uspto.gov

Paper No. 24

BIRCH STEWART KOLASCH & BIRCH
PO BOX 747
FALLS CHURCH, VA 22040-0747

COPY MAILED

SEP 1 4 2001

OFFICE OF PETITIONS

In re Application of :
Edgardo Poskus et al :
Application No. 08/969,334 :
Filed: November 28, 1997 :
Attorney Docket No. 1197-0121P :

ON PETITION

This is a decision on the renewed petition under 37 CFR 1.137(b), filed September 10, 2001, to revive the above-identified application.

The petition is **GRANTED**.

The above-identified application is being revived solely for purposes of continuity with a request for continued examination (RCE) filed on September 10, 2001 .

Telephone inquiries concerning this decision should be directed to Wan Laymon at (703) 305-9282.

The application file is being forwarded to Technology Center AU 1644.

Wan Laymon

Wan Laymon
Petitions Examiner
Office of Petitions
Office of the Deputy Commissioner
for Patent Examination Policy

UNITED STATES PATENT AND TRADEMARK OFFICE

UNITED STATES DEPARTMENT OF COMMERCE
United States Patent and Trademark Office
Address: COMMISSIONER FOR PATENTS
P.O. Box 1450
Alexandria, Virginia 22313-1450
www.uspto.gov

SEYFARTH SHAW LLP
131 S. DEARBORN ST., SUITE 2400
CHICAGO, IL 60603-5803

Mail Date: 07/12/2010

Applicant	: DANIEL J. WALLER	: DECISION ON REQUEST FOR
Patent Number	: 6003651	: RECALCULATION of PATENT
Issue Date	: 12/21/1999	: TERM ADJUSTMENT IN VIEW
Application No	: 08/969,605	: OF WYETH
Filed	: 11/13/1997	:
		:

The Patentee's Request for Recalculation is **DISMISSED.**

This Request is deemed ineligible for consideration for one or more of the following reasons:

(A). The patent for which PTA recalculation is requested is either a design or reissue application or is a reexamination proceeding;

(B). The patent for which PTA recalculation is requested resulted from a utility or plant application filed under 35 USC 111(a) before May 29, 2000 and no CPA filed in the application on/after May 29, 2000;

(C). The patent for which PTA recalculation is requested resulted from an international application in which the international filing date was before May 29, 2000 and no CPA filed in the application on/after May 29, 2000;

(D). The patent for which PTA recalculation is requested issued on/after March 2, 2010;

(E). The Request for Recalculation was filed more than 180 days after the grant date of the patent and the request was not filed within two months of a dismissal of a request for reconsideration of the of the patent term under 37 CFR 1.705(d);

(F). The Request for Recalculation is not solely limited to USPTO pre-Wyeth interpretation of 35 U.S.C. 154(b)(2)(A);

or

(G). A civil action was filed pursuant to 35 U.S.C. 154(b)(4)(A)concerning the same patent at issue in this request.

Patentee may file a reply to this decision dismissing the Request for Recalculation. Patentee must file such reply within one month or thirty days, whichever is longer, of the mail date of the decision dismissing the Request for Recalculation. No fee is required if patentee is asserting in the reply that the dismissal for ineligibility is improper.

Patentee should use document code PET.OP if electronically filing a reply to this dismissal. If the USPTO finds that the request was improperly deemed ineligible, the USPTO will mail applicant a recalculation determination.

Patentee should be aware that in order to preserve the right to review in the United States District Court for the District of Columbia of the USPTO patent term adjustment determination, patentee must ensure that he or she also take the steps required under 35 U.S.C. 154(b)(4)(A). Nothing in the request for recalculation should be construed as providing an alternative time frame for commencing a civil action under 35 U.S.C. 154 (b)(4)(A).

Any questions concerning this decision should be directed to the Office of Patent Legal Administration at 571-272-7702.

PTO/SB/66 (03-09)
Approved for use through 03/31/2012. OMB 0651-0016
U.S. Patent and Trademark Office: U.S. DEPARTMENT OF COMMERCE
Under the Paperwork Reduction Act of 1995, no persons are required to respond to a collection of information unless it displays valid OMB control number.

PETITION TO ACCEPT UNINTENTIONALLY DELAYED PAYMENT OF MAINTENANCE FEE IN AN EXPIRED PATENT (37 CFR 1.378(c))

Patent Number	Issue Date (YYYY-MM-DD)	Application Number	Filing Date (YYYY-MM-DD)	Docket Number (if applicable)
6,040,636	2000-03-21	08/969,681	1997-11-13	8002A-207

CAUTION: Maintenance fee (and surcharge, if any) payment must correctly identify: (1) the patent number and (2) the application number of the actual U.S. application leading to issuance of that patent to ensure the fee(s) is/are associated with the correct patent. 37 CFR 1.366(c) and (d).

SMALL ENTITY
☐ Patentee claims, or has previously claimed, small entity status. See 37 CFR 1.27.

LOSS OF ENTITLEMENT TO SMALL ENTITY STATUS
☐ Patentee is no longer entitled to small entity status. See 37 CFR 1.27(g)

NOT Small Entity		Small Entity	
Fee	Code	Fee	Code
○ 3 ½ year	(1551)	○ 3 ½ year	(2551)
◉ 7 ½ year	(1552)	○ 7 ½ year	(2552)
○ 11 ½ year	(1553)	○ 11 ½ year	(2553)

SURCHARGE
The surcharge required by 37 CFR 1.20(i)(2) (Fee Code 1558) must be paid as a condition of accepting unintentionally delayed payment of the maintenance fee.

MAINTENANCE FEE (37 CFR 1.20(e)-(g))
The appropriate maintenance fee must be submitted with this petition.

STATEMENT
THE UNDERSIGNED CERTIFIES THAT THE DELAY IN PAYMENT OF THE MAINTENANCE FEE TO THIS PATENT WAS UNINTENTIONAL

PETITIONER(S) REQUEST THAT THE DELAYED PAYMENT OF THE MAINTENANCE FEE BE ACCEPTED AND THE PATENT REINSTATED

THIS PORTION MUST BE COMPLETED BY THE SIGNATORY OR SIGNATORIES

37 CFR 1.378(d) states: "Any petition under this section must be signed by an attorney or agent registered to practice before the Patent and Trademark Office, or by the patentee, the assignee, or other party in interest."

I certify, in accordance with 37 CFR 1.4(d)(4) that I am

◉ An attorney or agent registered to practice before the Patent and Trademark Office

○ A sole patentee

○ A joint patentee; I certify that I am authorized to sign this submission on behalf of all the other patentees.

○ A joint patentee; all of whom are signing this e-petition

○ The assignee of record of the entire interest

Patent Practitioner			
A signature of the applicant or representative is required in accordance with 37 CFR 1.33 and 10.18. Please see 37 CFR 1.4(d) for the form of the signature			
Signature	/Richard D. Ratchford Jr./	Date (YYYY-MM-DD)	2009-05-22
Name	Richard D. Ratchford Jr.	Registration Number	53865

This collection of information is required by 37 CFR 1.378(c). The information is required to obtain or retain a benefit by the public which is to file (and by the USPTO to process) an application. Confidentiality is governed by 35 U.S.C. 122 and 37 CFR 1.11 and 1.14. This collection is estimated to take 1 hour to complete, including gathering, preparing, and submitting the completed application form to the USPTO. Time will vary depending upon the individual case. Any comments on the amount of time you require to complete this form and/ or suggestions for reducing this burden, should be sent to the Chief Information Officer, U.S. Patent and Trademark Office, U.S. Department of Commerce, P.O. Box 1450, Alexandria, VA 22313-1450. DO NOT SEND FEES OR COMPLETED FORMS TO THIS ADDRESS. **This form can only be used when in conjunction with EFS-Web. If this form is mailed to the USPTO, it may cause delays in reinstating the patent.**

Privacy Act Statement

The Privacy Act of 1974 (P.L. 93-579) requires that you be given certain information in connection with your submission of the attached form related to a patent application or patent. Accordingly, pursuant to the requirements of the Act, please be advised that: (1) the general authority for the collection of this information is 35 U.S.C. 2(b)(2); (2) furnishing of the information solicited is voluntary; and (3) the principal purpose for which the information is used by the U.S. Patent and Trademark Office is to process and/or examine your submission related to a patent application or patent. If you do not furnish the requested information, the U.S. Patent and Trademark Office may not be able to process and/or examine your submission, which may result in termination of proceedings or abandonment of the application or expiration of the patent.

The information provided by you in this form will be subject to the following routine uses:

1. The information on this form will be treated confidentially to the extent allowed under the Freedom of Information Act (5 U.S.C. 552) and the Privacy Act (5 U.S.C. 552a). Records from this system of records may be disclosed to the Department of Justice to determine whether the Freedom of Information Act requires disclosure of these records.

2. A record from this system of records may be disclosed, as a routine use, in the course of presenting evidence to a court, magistrate, or administrative tribunal, including disclosures to opposing counsel in the course of settlement negotiations.

3. A record in this system of records may be disclosed, as a routine use, to a Member of Congress submitting a request involving an individual, to whom the record pertains, when the individual has requested assistance from the Member with respect to the subject matter of the record.

4. A record in this system of records may be disclosed, as a routine use, to a contractor of the Agency having need for the information in order to perform a contract. Recipients of information shall be required to comply with the requirements of the Privacy Act of 1974, as amended, pursuant to 5 U.S.C. 552a(m).

5. A record related to an International Application filed under the Patent Cooperation Treaty in this system of records may be disclosed, as a routine use, to the International Bureau of the World Intellectual Property Organization, pursuant to the Patent Cooperation Treaty.

6. A record in this system of records may be disclosed, as a routine use, to another federal agency for purposes of National Security review (35 U.S.C. 181) and for review pursuant to the Atomic Energy Act (42 U.S.C. 218(c)).

7. A record from this system of records may be disclosed, as a routine use, to the Administrator, General Services, or his/her designee, during an inspection of records conducted by GSA as part of that agency's responsibility to recommend improvements in records management practices and programs, under authority of 44 U.S.C. 2904 and 2906. Such disclosure shall be made in accordance with the GSA regulations governing inspection of records for this purpose, and any other relevant (i.e., GSA or Commerce) directive. Such disclosure shall not be used to make determinations about individuals.

8. A record from this system of records may be disclosed, as a routine use, to the public after either publication of the application pursuant to 35 U.S.C. 122(b) or issuance of a patent pursuant to 35 U.S.C. 151. Further, a record may be disclosed, subject to the limitations of 37 CFR 1.14, as a routine use, to the public if the record was filed in an application which became abandoned or in which the proceedings were terminated and which application is referenced by either a published application, an application open to public inspections or an issued patent.

9. A record from this system of records may be disclosed, as a routine use, to a Federal, State, or local law enforcement agency, if the USPTO becomes aware of a violation or potential violation of law or regulation.

UNITED STATES PATENT AND TRADEMARK OFFICE

Commissioner for Patents
United States Patent and Trademark Office
P.O. Box 1450
Alexandria, VA 22313-1450
www.uspto.gov

In re Patent No. 6040636
Issue Date: March 21,2000
Application No. 08969681
Filed: November 13,1997
Attorney Docket No. N197528

:
:DECISION GRANTING PETITION
:UNDER 37 CFR 1.378(c)
:

This is a decision on the electronic petition, filed May 22,2009 ,under 37 CFR 1.378(c) to accept the unintentionally delayed payment of the 7.5 year maintenance fee for the above-identified patent.

The petition is **GRANTED**.

The maintenance fee is accepted, and the above-identified patent reinstated as of May 22,2009 . This decision also constitutes notice that the fee has been accepted. An electronic copy of the petition and this decision has been created as an entry in the Image File Wrapper. Nevertheless, petitioner should print and retain an independent copy.

Telephone inquiries related to this electronic decision should be directed to the Electronic Business Center at 1-866-217-9197.

UNITED STATES PATENT AND TRADEMARK OFFICE

Commissioner for Patents
United States Patent and Trademark Office
P.O. Box 1450
Alexandria, VA 22313-1450
www.uspto.gov

Paper No.

EZRA SUTTON
PLAZA 9, 900 ROUTE 9
WOODBRIDGE NJ 07095EZRA SUTTON
PLAZA 9, 900 ROUTE 9
WOODBRIDGE, NJ 07095

MAILED
FEB 17 2009
OFFICE OF PETITIONS

In re Patent No. 6,010,228	:	
Issue Date: January 4, 2000	:	
Application No. 08/969,788	:	ON PETITION
Filed: November 13, 1997	:	
Patentee(s): Stephen E. Blackman, et. al.	:	

This is a decision on the petition under 37 CFR 1.378(c), filed on January 7, 2009, to accept the delayed payment of a maintenance fee for the above-identified patent.

Since petitioner has demonstrated to the satisfaction of the Commissioner that the delay in timely paying the maintenance fee was unintentional, the petition under 37 CFR 1.378(c) is hereby **GRANTED**.

The maintenance fee is hereby accepted and the above-identified patent is reinstated as of the mail date of this decision.

This patented file is being forwarded to Files Repository.

Telephone inquiries should be directed to the undersigned at (571) 272-3226.

Andrea Smith
Petitions Examiner
Office of Petitions

UNITED STATES PATENT AND TRADEMARK OFFICE

Commissioner for Patents
United States Patent and Trademark Office
Washington, D.C. 20231
www.uspto.gov

Paper No. 33

Holland & Knight LLP
One Atlantic Center, Suite 2000
1201 West Peachtree Street NE
Atlanta, GA 30309-3400

COPY MAILED

MAY 1 3 2003

OFFICE OF PETITIONS

In re Application of
Eugen Koren et al.
Application No. 08/970,045
Filed: November 13, 1997
Attorney Docket No. OMRF 143 CON

ON PETITION

This is a decision on the petition under 37 CFR 1.137(b), filed April 9, 2003, to revive the above-identified application.

The petition is **GRANTED**.

The above-identified application became abandoned for failure to reply within the meaning of 37 CFR 1.113 in a timely manner in reply to the final Office action mailed October 2, 2002, which set a shortened statutory period for reply of three months. No extensions of time under the provisions of 37 CFR 1.136 have been obtained. Accordingly, the application became abandoned on January 3, 2003.

The two-month period for filing an appeal brief in triplicate (accompanied by the fee required by 37 CFR 1.17(c)), runs from the date of this decision.

Telephone inquiries concerning this decision should be directed to Latrice Bond at (703) 308-6911.

The application file is being forwarded to Technology Center AU 1645 for further processing.

Latrice Bond

Latrice Bond
Paralegal Specialist
Office of Petitions
Office of the Deputy Commissioner
for Patent Examination Policy

UNITED STATES PATENT AND TRADEMARK OFFICE

Commissioner for Patents
United States Patent and Trademark Office
P.O. Box 1450
Alexandria, VA 22313-1450
www.uspto.gov

In re Patent No. 6000192
Issue Date: December 14,1999
Application No. 08970181
Filed: November 14,1997
Attorney Docket No. 6100/003

:
:DECISION GRANTING PETITION
:UNDER 37 CFR 1.378(c)
:

This is a decision on the electronic petition, filed January 18,2008 ,under 37 CFR 1.378(c) to accept the unintentionally delayed payment of the 7.5 year maintenance fee for the above-identified patent.

The petition is GRANTED.

The maintenance fee is accepted, and the above-identified patent reinstated as of January 18,2008 . This decision also constitutes notice that the fee has been accepted. An electronic copy of the petition and this decision has been created as an entry in an Image File Wrapper. Nevertheless, petitioner should print and retain an independent copy

Telephone inquires related to this electronic decision should be directed to the Electronic Business Center at 1-866-217-9197.

Under the Paperwork Reduction Act of 1995, no persons are required to respond to a collection of information unless it displays valid OMB control number.

PETITION TO ACCEPT UNINTENTIONALLY DELAYED PAYMENT OF MAINTENANCE FEE IN AN EXPIRED PATENT (37 CFR 1.378(c))

Patent Number	Issue Date (YYYY-MM-DD)	Application Number	Filing Date (YYYY-MM-DD)	Docket Number (if applicable)
6000192	1999-12-14	08970181	1997-11-14	013226.0103N1US

CAUTION: Maintenance fee (and surcharge, if any) payment must correctly identify: (1) the patent number and (2) the application number of the actual U.S. application leading to issuance of that patent to ensure the fee(s) is/are associated with the correct patent. 37 CFR 1.366(c) and (d).

SMALL ENTITY
☒ Patentee claims, or has previously claimed, small entity status. See 37 CFR 1.27.

LOSS OF ENTITLEMENT TO SMALL ENTITY STATUS
☐ Patentee is no longer entitled to small entity status. See 37 CFR 1.27(g)

NOT Small Entity		Small Entity	
Fee	Code	Fee	Code
○ 3 ½ year	(1551)	○ 3 ½ year	(2551)
○ 7 ½ year	(1552)	◉ 7 ½ year	(2552)
○ 11 ½ year	(1553)	○ 11 ½ year	(2553)

SURCHARGE
The surcharge required by 37 CFR 1.20(i)(2) (Fee Code 1558) must be paid as a condition of accepting unintentionally delayed payment of the maintenance fee.

MAINTENANCE FEE (37 CFR 1.20(e)-(g))
The appropriate maintenance fee must be submitted with this petition.

STATEMENT
THE UNDERSIGNED CERTIFIES THAT THE DELAY IN PAYMENT OF THE MAINTENANCE FEE TO THIS PATENT WAS UNINTENTIONAL

PETITIONER(S) REQUEST THAT THE DELAYED PAYMENT OF THE MAINTENANCE FEE BE ACCEPTED AND THE PATENT REINSTATED

THIS PORTION MUST BE COMPLETED BY THE SIGNATORY OR SIGNATORIES

37 CFR 1.378(d) states: "Any petition under this section must be signed by an attorney or agent registered to practice before the Patent and Trademark Office, or by the patentee, the assignee, or other party in interest."

I certify, in accordance with 37 CFR 1.4(d)(4) that I am

◉ An attorney or agent registered to practice before the Patent and Trademark Office

○ A sole patentee

○ A joint patentee; I certify that I am authorized to sign this submission on behalf of all the other patentees.

○ A joint patentee; all of whom are signing this e-petition

○ The assignee of record of the entire interest

Patent Practitioner			
A signature of the applicant or representative is required in accordance with 37 CFR 1.33 and 10.18. Please see 37 CFR 1.4(d) for the form of the signature			
Signature	/James M. Graziano/	Date (YYYY-MM-DD)	2008-01-18
Name	James M. Graziano	Registration Number	28300

This collection of information is required by 37 CFR 1.378(c). The information is required to obtain or retain a benefit by the public which is to file (and by the USPTO to process) an application. Confidentiality is governed by 35 U.S.C. 122 and 37 CFR 1.11 and 1.14. This collection is estimated to take 1 hour to complete, including gathering, preparing, and submitting the completed application form to the USPTO. Time will vary depending upon the individual case. Any comments on the amount of time you require to complete this form and/ or suggestions for reducing this burden, should be sent to the Chief Information Officer, U.S. Patent and Trademark Office, U.S. Department of Commerce, P.O. Box 1450, Alexandria, VA 22313-1450. DO NOT SEND FEES OR COMPLETED FORMS TO THIS ADDRESS. **This form can only be used when in conjunction with EFS-Web. If this form is mailed to the USPTO, it may cause delays in reinstating the patent.**

Privacy Act Statement

The Privacy Act of 1974 (P.L. 93-579) requires that you be given certain information in connection with your submission of the attached form related to a patent application or patent. Accordingly, pursuant to the requirements of the Act, please be advised that: (1) the general authority for the collection of this information is 35 U.S.C. 2(b)(2); (2) furnishing of the information solicited is voluntary; and (3) the principal purpose for which the information is used by the U.S. Patent and Trademark Office is to process and/or examine your submission related to a patent application or patent. If you do not furnish the requested information, the U.S. Patent and Trademark Office may not be able to process and/or examine your submission, which may result in termination of proceedings or abandonment of the application or expiration of the patent.

The information provided by you in this form will be subject to the following routine uses:

1. The information on this form will be treated confidentially to the extent allowed under the Freedom of Information Act (5 U.S.C. 552) and the Privacy Act (5 U.S.C. 552a). Records from this system of records may be disclosed to the Department of Justice to determine whether the Freedom of Information Act requires disclosure of these record s.

2. A record from this system of records may be disclosed, as a routine use, in the course of presenting evidence to a court, magistrate, or administrative tribunal, including disclosures to opposing counsel in the course of settlement negotiations.

3. A record in this system of records may be disclosed, as a routine use, to a Member of Congress submitting a request involving an individual, to whom the record pertains, when the individual has requested assistance from the Member with respect to the subject matter of the record.

4. A record in this system of records may be disclosed, as a routine use, to a contractor of the Agency having need for the information in order to perform a contract. Recipients of information shall be required to comply with the requirements of the Privacy Act of 1974, as amended, pursuant to 5 U.S.C. 552a(m).

5. A record related to an International Application filed under the Patent Cooperation Treaty in this system of records may be disclosed, as a routine use, to the International Bureau of the World Intellectual Property Organization, pursuant to the Patent Cooperation Treaty.

6. A record in this system of records may be disclosed, as a routine use, to another federal agency for purposes of National Security review (35 U.S.C. 181) and for review pursuant to the Atomic Energy Act (42 U.S.C. 218(c)).

7. A record from this system of records may be disclosed, as a routine use, to the Administrator, General Services, or his/her designee, during an inspection of records conducted by GSA as part of that agency's responsibility to recommend improvements in records management practices and programs, under authority of 44 U.S.C. 2904 and 2906. Such disclosure shall be made in accordance with the GSA regulations governing inspection of records for this purpose, and any other relevant (i.e., GSA or Commerce) directive. Such disclosure shall not be used to make determinations about individuals.

8. A record from this system of records may be disclosed, as a routine use, to the public after either publication of the application pursuant to 35 U.S.C. 122(b) or issuance of a patent pursuant to 35 U.S.C. 151. Further, a record may be disclosed, subject to the limitations of 37 CFR 1.14, as a routine use, to the public if the record was filed in an application which became abandoned or in which the proceedings were terminated and which application is referenced by either a published application, an application open to public inspections or an issued patent.

9. A record from this system of records may be disclosed, as a routine use, to a Federal, State, or local law enforcement agency, if the USPTO becomes aware of a violation or potential violation of law or regulation.

UNITED STATES PATENT AND TRADEMARK OFFICE

Commissioner for Patents
United States Patent and Trademark Office
P.O. Box 1450
Alexandria, VA 22313-1450
www.uspto.gov

In re Patent No. 6057845
Issue Date: May 2,2000
Application No. 08970306
Filed: November 14,1997
Attorney Docket No.

:
:DECISION GRANTING PETITION
:UNDER 37 CFR 1.378(c)
:

This is a decision on the electronic petition, filed August 21,2009 ,under 37 CFR 1.378(c) to accept the unintentionally delayed payment of the 7.5 year maintenance fee for the above-identified patent.

The petition is **GRANTED**.

The maintenance fee is accepted, and the above-identified patent reinstated as of August 21,2009 . This decision also constitutes notice that the fee has been accepted. An electronic copy of the petition and this decision has been created as an entry in the Image File Wrapper. Nevertheless, petitioner should print and retain an independent copy.

Telephone inquiries related to this electronic decision should be directed to the Electronic Business Center at 1-866-217-9197.

PTO/SB/66 (03-09)
Approved for use through 03/31/2012. OMB 0651-0016
U.S. Patent and Trademark Office: U.S. DEPARTMENT OF COMMERCE
Under the Paperwork Reduction Act of 1995, no persons are required to respond to a collection of information unless it displays valid OMB control number.

PETITION TO ACCEPT UNINTENTIONALLY DELAYED PAYMENT OF MAINTENANCE FEE IN AN EXPIRED PATENT (37 CFR 1.378(c))

Patent Number	Issue Date (YYYY-MM-DD)	Application Number	Filing Date (YYYY-MM-DD)	Docket Number (if applicable)
6057845	2000-05-02	08/970,306	1997-11-14	

CAUTION: Maintenance fee (and surcharge, if any) payment must correctly identify: (1) the patent number and (2) the application number of the actual U.S. application leading to issuance of that patent to ensure the fee(s) is/are associated with the correct patent. 37 CFR 1.366(c) and (d).

SMALL ENTITY
☒ Patentee claims, or has previously claimed, small entity status. See 37 CFR 1.27.

LOSS OF ENTITLEMENT TO SMALL ENTITY STATUS
☐ Patentee is no longer entitled to small entity status. See 37 CFR 1.27(g)

NOT Small Entity		Small Entity	
Fee	Code	Fee	Code
○ 3 ½ year	(1551)	○ 3 ½ year	(2551)
○ 7 ½ year	(1552)	◉ 7 ½ year	(2552)
○ 11 ½ year	(1553)	○ 11 ½ year	(2553)

SURCHARGE
The surcharge required by 37 CFR 1.20(i)(2) (Fee Code 1558) must be paid as a condition of accepting unintentionally delayed payment of the maintenance fee.

MAINTENANCE FEE (37 CFR 1.20(e)-(g))
The appropriate maintenance fee must be submitted with this petition.

STATEMENT
THE UNDERSIGNED CERTIFIES THAT THE DELAY IN PAYMENT OF THE MAINTENANCE FEE TO THIS PATENT WAS UNINTENTIONAL

PETITIONER(S) REQUEST THAT THE DELAYED PAYMENT OF THE MAINTENANCE FEE BE ACCEPTED AND THE PATENT REINSTATED

THIS PORTION MUST BE COMPLETED BY THE SIGNATORY OR SIGNATORIES

37 CFR 1.378(d) states: "Any petition under this section must be signed by an attorney or agent registered to practice before the Patent and Trademark Office, or by the patentee, the assignee, or other party in interest."

I certify, in accordance with 37 CFR 1.4(d)(4) that I am

◉ An attorney or agent registered to practice before the Patent and Trademark Office

○ A sole patentee

○ A joint patentee; I certify that I am authorized to sign this submission on behalf of all the other patentees.

○ A joint patentee; all of whom are signing this e-petition

○ The assignee of record of the entire interest

Patent Practitioner			
A signature of the applicant or representative is required in accordance with 37 CFR 1.33 and 10.18. Please see 37 CFR 1.4(d) for the form of the signature			
Signature	/John P. Wagner, Jr./	Date (YYYY-MM-DD)	2009-08-21
Name	John P. Wagner, Jr.	Registration Number	35398

This collection of information is required by 37 CFR 1.378(c). The information is required to obtain or retain a benefit by the public which is to file (and by the USPTO to process) an application. Confidentiality is governed by 35 U.S.C. 122 and 37 CFR 1.11 and 1.14. This collection is estimated to take 1 hour to complete, including gathering, preparing, and submitting the completed application form to the USPTO. Time will vary depending upon the individual case. Any comments on the amount of time you require to complete this form and/ or suggestions for reducing this burden, should be sent to the Chief Information Officer, U.S. Patent and Trademark Office, U.S. Department of Commerce, P.O. Box 1450, Alexandria, VA 22313-1450. DO NOT SEND FEES OR COMPLETED FORMS TO THIS ADDRESS. **This form can only be used when in conjunction with EFS-Web. If this form is mailed to the USPTO, it may cause delays in reinstating the patent.**

Privacy Act Statement

The Privacy Act of 1974 (P.L. 93-579) requires that you be given certain information in connection with your submission of the attached form related to a patent application or patent. Accordingly, pursuant to the requirements of the Act, please be advised that: (1) the general authority for the collection of this information is 35 U.S.C. 2(b)(2); (2) furnishing of the information solicited is voluntary; and (3) the principal purpose for which the information is used by the U.S. Patent and Trademark Office is to process and/or examine your submission related to a patent application or patent. If you do not furnish the requested information, the U.S. Patent and Trademark Office may not be able to process and/or examine your submission, which may result in termination of proceedings or abandonment of the application or expiration of the patent.

The information provided by you in this form will be subject to the following routine uses:

1. The information on this form will be treated confidentially to the extent allowed under the Freedom of Information Act (5 U.S.C. 552) and the Privacy Act (5 U.S.C. 552a). Records from this system of records may be disclosed to the Department of Justice to determine whether the Freedom of Information Act requires disclosure of these records.

2. A record from this system of records may be disclosed, as a routine use, in the course of presenting evidence to a court, magistrate, or administrative tribunal, including disclosures to opposing counsel in the course of settlement negotiations.

3. A record in this system of records may be disclosed, as a routine use, to a Member of Congress submitting a request involving an individual, to whom the record pertains, when the individual has requested assistance from the Member with respect to the subject matter of the record.

4. A record in this system of records may be disclosed, as a routine use, to a contractor of the Agency having need for the information in order to perform a contract. Recipients of information shall be required to comply with the requirements of the Privacy Act of 1974, as amended, pursuant to 5 U.S.C. 552a(m).

5. A record related to an International Application filed under the Patent Cooperation Treaty in this system of records may be disclosed, as a routine use, to the International Bureau of the World Intellectual Property Organization, pursuant to the Patent Cooperation Treaty.

6. A record in this system of records may be disclosed, as a routine use, to another federal agency for purposes of National Security review (35 U.S.C. 181) and for review pursuant to the Atomic Energy Act (42 U.S.C. 218(c)).

7. A record from this system of records may be disclosed, as a routine use, to the Administrator, General Services, or his/her designee, during an inspection of records conducted by GSA as part of that agency's responsibility to recommend improvements in records management practices and programs, under authority of 44 U.S.C. 2904 and 2906. Such disclosure shall be made in accordance with the GSA regulations governing inspection of records for this purpose, and any other relevant (i.e., GSA or Commerce) directive. Such disclosure shall not be used to make determinations about individuals.

8. A record from this system of records may be disclosed, as a routine use, to the public after either publication of the application pursuant to 35 U.S.C. 122(b) or issuance of a patent pursuant to 35 U.S.C. 151. Further, a record may be disclosed, subject to the limitations of 37 CFR 1.14, as a routine use, to the public if the record was filed in an application which became abandoned or in which the proceedings were terminated and which application is referenced by either a published application, an application open to public inspections or an issued patent.

9. A record from this system of records may be disclosed, as a routine use, to a Federal, State, or local law enforcement agency, if the USPTO becomes aware of a violation or potential violation of law or regulation.

UNITED STATES PATENT AND TRADEMARK OFFICE

COMMISSIONER FOR PATENTS
UNITED STATES PATENT AND TRADEMARK OFFICE
WASHINGTON, D.C. 20231
www.uspto.gov

Paper No. 9

COPY MAILED

JUN 23 2000

SPECIAL PROGRAMS OFFICE
DAC FOR PATENTS

MARK A SMITH
SHELL OIL COMPANY
INTELLECTUAL PROPERTY
P.O. BOX 2463
HOUSTON, TX 77252-2463

In re Application of
Donald Wayne Allen et al.
Application No. 08/970,312
Filed: November 14, 1997
Attorney Docket No. TH0776X

ON PETITION

This is a decision on the petition under 37 CFR 1.137(b), filed June 12, 2000, to revive the above-identified application.

The petition is **GRANTED**.

The above-identified application became abandoned for failure to reply in a timely manner to the non-final Office action mailed October 8, 1998, which set a shortened statutory period for reply of three (3) months. No extensions of time under the provisions of 37 CFR 1.136(a) were obtained. Accordingly, the above-identified application became abandoned on January 9, 2000.

Telephone inquiries concerning this decision should be directed to Wan Laymon at (703) 305-9282.

The application file is being forwarded to Technology Center 3600 for further processing.

Wan Laymon

Wan Laymon
Petitions Examiner
Office of Petitions
Office of the Deputy Assistant Commissioner
for Patent Policy and Projects

UNITED STATES PATENT AND TRADEMARK OFFICE

COMMISSIONER FOR PATENTS
UNITED STATES PATENT AND TRADEMARK OFFICE
WASHINGTON, D.C. 20231
www.uspto.gov

Paper No. 26

ER MONTALO
SHELL OIL COMPANY
INTELLECTUAL PROPERTY
P.O. BOX 2463
HOUSTON, TX 77252-2463

COPY MAILED

JUN 1 1 2002

OFFICE OF PETITIONS

In re Application of	:	
Donald Wayne Allen et al	:	
Application No. 08/970,312	:	ON PETITION
Filed: November 14, 1997	:	
Attorney Docket No. TH-0776X (US) ERM: SWT	:	

This is a decision on the petition under 37 CFR 1.137(b), filed April 15, 2002, to revive the above-identified application.

The petition is **GRANTED**.

The above-identified application became abandoned for failure to submit formal drawings in a timely manner in reply to the Notice of Allowability mailed October 2, 2001, which set a shortened statutory period for reply of three (3) months. Accordingly, the above-identified application became abandoned on January 3, 2002.

Telephone inquiries concerning this decision should be directed to Wan Laymon at (703) 305-9282.

The application file is being forwarded to Publishing Division.

Wan Laymon

Wan Laymon
Petitions Examiner
Office of Petitions
Office of the Deputy Commissioner
for Patent Examination Policy

The opinion in support of the decision being entered today was **not** written for publication and is **not** binding precedent of the Board.

Paper No. 14

UNITED STATES PATENT AND TRADEMARK OFFICE

BEFORE THE BOARD OF PATENT APPEALS
AND INTERFERENCES

Ex parte GARETH CHRISTOPHER MATTHEWS
and KELVIN RODERICK LAWRENCE

MAILED

MAR 10 2004

PAT. & T.M. OFFICE
BOARD OF PATENT APPEALS
AND INTERFERENCES

Appeal No. 2002-0786
Application 08/970,417

ON BRIEF

Before BARRETT, FLEMING, and SAADAT, **Administrative Patent Judges.**

FLEMING, **Administrative Patent Judge.**

DECISION ON APPEAL

This is a decision on appeal from the final rejection of claims 31 through 36, 44 through 49 and 57 through 62. Claims 1 through 30, 37 through 43 and 50 through 56 have been canceled.[1]

---

[1] Appellants canceled claims 37 through 43 and 50 through 56 in an after final amendment, paper no. 7, on April 17, 2001. Examiner stated in the advisory action, paper no. 8, May 4, 2001 that the amendment would be entered on Appeal.

Invention

The invention relates to the management of memory of an interpretive system environment. See page 1 of Appellants' specification. In interpretive languages such as Java, a compiler typically generates byte-codes to be used by a programming virtual machine, rather than native machine code, to provide control and data necessary to execute an application. See page 3 of the Appellants' specification. An advantage of the interpretive environment is that a standard "compile" phase of program development is significantly diminished when viewed in contrast with the compile-link-run cycles required by programming languages such as C and C++. In contrast, a disadvantage of an interpretive programming language, such as Java, is that an interpertive programming language is not executed as quickly as a compiled language such as the programming language C. See page 4 of Appellants' specification. To boost the performance of applications written in Java, many Java interpreters include "Just In Time" compilers that are able to translate certain Java byte-code segments into machine code for a particular central processing unit at a run-time. This block of compiled code is then stored in a storage space, referred to as a "heap." By storing the "Just In Time" code in a "heap", the code maybe

repeatedly accessed and not required to be compiled a second time. See page 4 of Appellants' specification. Because the heap tends to grow larger until the memory space is exceeded, there is a need for managing a heap to ensure efficient and timely execution of the application. See pages 4 and 5 of Appellants' specification. Appellants' invention uses a page manager for managing the physical memory pages associated with storing a "heap." See page 9 of Appellants' specification. After a Java programming code is compiled, the code is stored into the pages in a heap 312 shown in Figure 3. See page 14 of Appellants' specification. During operation, the size of the heap grows as the number of pages in the map and data stored therein increase. Appellants' invention manages the heap by a page manager within the operating system 302 shown in Figure 3. See page 15 of Appellants' specification.

Appellants' claim 31 is representative of Appellants' claimed invention and is reproduced as follow:

31. A method for managing a memory in a virtual machine comprising the steps of:

receiving a software program written in an interpreted programming language;

initiating operation of said virtual machine to selectively convert at least a portion of said software program to a plurality of byte-code values;

selectively storing said plurality of byte-code values in said memory; and

enabling a page manager to selectively enable said memory to discard said plurality of byte-code values.

REFERENCES

The references relied on by the Examiner are as follows:

Nilsen et al. (Nilsen) 6,081,665 June 27, 2000 (Filing date Dec. 19, 1997 with provisional application filed Dec. 21, 1996.)

Gosling et al. (Gosling), "The Java Language Environment: A White Paper", 10/95, pages 10 through 85.

Rejection at Issue

Claims 31 through 36, 44 through 49 and 57 through 62 stand rejected under 35 U.S.C. § 103 as being unpatentable over Gosling and Nilsen.

Throughout our opinion, we will make reference to the briefs[2] and answer for the respective details thereof.

OPINION

With full consideration being given to the subject matter on appeal, the Examiner's rejection and the arguments of the Appellants and the Examiner, for the reasons stated **infra**, we

[2] Appellants filed an appeal brief on July 23, 2001. Appellants filed a reply brief on January 14, 2002. The Examiner mailed out an Office communication on January 28, 2002 stating that the reply brief has been entered.

will sustain the Examiner's rejection of claims 31, 32, 44, 45, 57 and 58 under 35 U.S.C. § 103 and we will not sustain the Examiner's rejection of claims 33 through 43, 46 through 56 and 59 through 62 under 35 U.S.C. § 103.

At the outset, we note that Appellants state on page 4 of the brief that claims 31, 32, 44, 45, 57 and 58 are grouped together. 37 CFR § 1.192(c)(7)(July 1, 2001) **as amended at** 62 Fed. Reg. 53196 (October 10, 1997), which was controlling at the time of Appellants filing the brief, states:

> For each ground of rejection which appellant contests and which applies to a group of two or more claims, the Board shall select a single claim from the group and shall decide the appeal as to the ground of rejection on the basis of that claims alone unless a statement is included that the claims of the group do not stand or fall together and, in the argument under paragraph (c)(8) of this section, appellant explains why the claims of the group are believed to be separately patentable. Merely pointing out differences in what the claims cover is not an argument as to why the claims are separately patentable.

For the rejection of claims 31, 32, 44, 45, 57 and 58 under 35 U.S.C. § 103 as being unpatentable over Gosling and Nilsen, we will, thereby, consider the Appellants' claims 31, 32, 44, 45, 57 and 58 as standing or falling together and we will treat claim 31 as a representative claim of that group. **See also In re McDaniel**, 293 F.3d 1379, 1383, 63 USPQ2d 1462, 1465 (Fed. Cir. 2002) ("If the brief fails to meet either requirement [of 37 CFR

§ 1.192(c)(7)], the Board is free to select a single claim from each group of claims subject to a common ground of rejection as representative of all claims in that group and to decide the appeal of that rejection based solely on the selected representative claim.")

In rejecting claims under 35 U.S.C. § 103, the Examiner bears the initial burden of establishing a **prima facie** case of obviousness. **In re Oetiker**, 977 F.2d 1443, 1445, 24 USPQ 1443, 1444 (Fed. Cir. 1992). **See also In are Piasecki**, 745 F.2d 1468, 1472, 223 USPQ 785, 788 (Fed. Cir. 1984). The Examiner can satisfy this burden by showing that some objective teaching in the prior art or knowledge generally available to one of ordinary skill in the art suggests the claimed subject matter. **In re Fine**, 837 F.2d 1071, 1074, 5 USPQ2d 1596, 1598 (Fed. Cir. 1988). Only if this initial burden is met does the burden of coming forward with evidence or argument shift to the Appellants. **Oetiker**, 977 F.2d at 1445, 24 USPQ at 1444. **See also Piasecki**, 745 F.2d at 1472, 223 USPQ at 788.

An obviousness analysis commences with a review and consideration of all the pertinent evidence and arguments. "In reviewing the [E]xaminer's decision on appeal, the Board must

necessarily weigh all of the evidence and argument." **In re Oetiker**, 977 F.2d at 1445, 24 USPQ2d at 1444. "[T]he board must not only assure that the requisite findings are made, based on evidence of record, but must also explain the reasoning by which the findings are deemed to support the agency's conclusion." **In re Lee**, 277 F.3d 1338, 1344, 61 USPQ2d 1430, 1434 (Fed. Cir. 2002).

Appellants argue that there is no motivation to combine Gosling with Nilsen. However, Appellants do admit that Nilsen teaches the use of PERC "a trademark of NewMonics Inc." which is a dialect of the Java programming. Appellants point us to column 2, lines 43 through 51 of Nilsen. Furthermore, Appellants admit that Nilsen teaches a heap region for storing a plurality of byte-code values. Appellants point us to column 42, lines 59 through 61 of Nilsen. See page 7 of Appellants' brief.

We note that the Examiner was relying on Gosling for the teaching of "receiving a software program written in a interpretive program language" and "initiating operation of said virtual machine to selectively to convert at least a portion of software programs to a plurality of byte-code values."

As pointed out by Appellants in the brief, as well as our review of Nilsen, we find that Nilsen teaches both of these

limitations. We find that Nilsen teaches in column 2, lines 43 through 51 receiving a software program written in an interpretive program language. Furthermore, we find that Nilsen teaches in column 5, lines 54 through 67 initiating operations of the virtual machine to selectively convert at least a portion of the software program to a plurality of byte-code values. Therefore, we find that Nilsen teaches all the limitations that the Examiner was relying on for Gosling. Lack of novelty is the ultimate of obviousness. See **In re Fracalossi**, 681 F.2d 792, 794, 215 USPQ 569, 571 (CCPA 1982).

Appellants argue that neither Gosling nor Nilsen teaches "enabling a page manager to selectively enable said memory to discard said plurality of byte-code values." Appellants argue that the reliance on Nilsen garbage collection function as disclosed in columns 43 and 53 cannot be read on Appellants' claimed page manager. Appellants argue that the Nilsen garbage collection function cannot be properly read on Appellants' claimed page manager because the garbage collector is operating in the Java virtual machine and is not operating in the operating system. See page 2 of Appellants' reply brief and page 7 of the brief.

Our reviewing court states in **In re Zletz**, 893 F.2d 319, 321, 13 USPQ2d 1320, 1322 (Fed. Cir. 1989) that "claims must be interpreted as broadly as their terms reasonably allow." As our reviewing court states, "[T]he terms used in the claims bear a "heavy presumption" that they mean what they say and have the ordinary meaning that would be attributed to those words by person skilled in the relevant art." **Texas Digital Systems, Inc. v. Telegenix, Inc.**, 308 F.3d 1193, 1202, 64 USPQ2d 1812, 1817 (Fed. Cir. 2002).

Upon our review of the claim language, we fail to find anything in the claim language that requires a further limitation on operating in the operating system. Furthermore, we fail to find anything in the specification that requires that a page manager is defined specifically in that narrow definition. Therefore, we find that Nilsen teaches all the limitations recited in Appellants' claim 31.

Appellants have not made any other arguments as to the rejection of claims 31, 32, 44, 45, 57 and 58 under 35 U.S.C. § 103. In particular, we note that Appellants have not argued that the provisional application date of December 21, 1996 is improper. 37 CRF § 1.192 (a) states:

> Appellant must, within two months from the date of the notice of appeal under §1.191 or within the time allowed for reply to the action from which the appeal was taken, if such time is later, file a brief in triplicate. The brief must be accompanied by the fee set forth in § 1.17 (c) and must set forth the authorities and arguments on which appellant will rely to maintain the appeal. Any arguments or authorities not included in the brief will be refused consideration by the Board of Patent Appeals and Interferences, unless good cause is shown.

Thus, 37 CFR § 1.192 provides that only the arguments made by Appellants in the brief will be considered and that failure to make an argument constitutes a waiver on that particular point. Support for this rule has been demonstrated by our reviewing court in **In re Berge**, 279 F.3d 975, 61 USPQ2d 1523 (Fed. Cir. 2002), wherein the Federal Circuit Court stated that because the Appellant did not contest the merits of the rejection in his brief to the Federal Circuit court, the issue is waived. Also, see **In re Watts**, Slip No. 03-1121.

For the rejection of claims 33, 46, and 59, the Examiner states "It would have been obvious upon initialization, memory would be reserved for the object. Otherwise, an error could occur." See page 7 of the Examiner's answer.

Appellants argue that the Examiner has failed to support the proposition that it would have been obvious to modify Gosling and/or Nilsen to include a registration operation where the

registration operation indicates a portion of the memory is to be reserved for use by the virtual machine during execution of the software program as recited in Appellants' claims. Appellants argue that the Examiner must submit objective evidence to support that proposition.

The Federal Circuit reviews the Board's ultimate conclusion of obviousness without deference, and the Board's underlying factual determinations for substantial evidence. **In re Huston**, 308 F.3d 1267, 1276, 64 USPQ2d 1801, 1806 (Fed. Cir. 2002) **citing In re Gartside**, 203 F.3d 1305, 1316, 53 USPQ2d 1769, 1776 (Fed. Cir. 2000). "The Board's findings must extend to all material facts and must be documented on the record, least the 'haze of so-called expertise' acquire insulation from accountability." **In re Lee**, 277 F.3d 1338, 1345, 61 USPQ2d 1430, 1435 (Fed. Cir. 2002).

The Federal Circuit states that, "[t]he mere fact that the prior art may be modified in the manner suggested by the Examiner does not make the modification obvious unless the prior art suggested the desirability of the modification." **In re Fritch**, 972 F.2d 1260, 1266 n.14, 23 USPQ2d 1780, 1783-84 n.14 (Fed. Cir. 1992), citing **In re Gordon**, 733 F.2d 900, 902, 221 USPQ 1125, 1127 (Fed. Cir. 1984). "It must be based on objective evidence

of record." **Id.** "Broad conclusory statements regarding the teaching of multiple references, standing alone, are not 'evidence.'" **In re Dembiczak**, 175 F.3d 994, 999, 50 USPQ2d 1614, 1617. "Mere denials and conclusory statements, however, are not sufficient to establish a genuine issue of material fact." **Dembiczak**, 175 F.3d at 1000, 50 USPQ2d at 1617, **citing McElmurry v. Ark. Power & Light Co.**, 995 F.2d 1576, 1578, 27 USPQ2d 1129, 1131 (Fed. Cir. 1993).

We fail to find that the Examiner has provided the necessary objective evidence of the record to establish the modification as proposed by the Examiner, therefore, we will not sustain the Examiner's rejection of claims 33, 46 and 59. Furthermore, because of their dependencies on claims 33, 46 and 59, we will not sustain the rejection of claims 34 through 36, 47 through 49 and 60 through 62.

In view of the foregoing, we have sustained the Examiner's rejection under 35 U.S.C. § 103 of claims 31, 32, 44, 45, 57 and 58, however, we have not sustained the Examiner's rejection of claims 33 through 36, 46 through 49 and 59 through 62.

No time period for taking any subsequent action in connection with this appeal may be extended under 37 CFR § 1.136(a).

AFFIRMED-IN-PART

LEE E. BARRETT Administrative Patent Judge	)
MICHAEL R. FLEMING Administrative Patent Judge	) BOARD OF PATENT APPEALS AND INTERFERENCES
MAHSHID SAADAT Administrative Patent Judge	)

MRF:pgc

Appeal No. 2002-0786
Application 08/970,417

James J. Murphy
5400 Renaissance Tower
1201 Elm Street
Dallas, TX 75270-2199

UNITED STATES PATENT AND TRADEMARK OFFICE

Commissioner for Patents
United States Patent and Trademark Office
P.O. Box 1450
Alexandria, VA 22313-1450
www.uspto.gov

In re Patent No. 6265128
Issue Date: July 24,2001
Application No. 08970424
Filed: November 14,1997
Attorney Docket No. 175-186P

:
:DECISION GRANTING PETITION
:UNDER 37 CFR 1.378(c)
:

This is a decision on the electronic petition, filed October 19,2009 ,under 37 CFR 1.378(c) to accept the unintentionally delayed payment of the 7.5 year maintenance fee for the above-identified patent.

The petition is **GRANTED**.

The maintenance fee is accepted, and the above-identified patent reinstated as of October 19,2009 . This decision also constitutes notice that the fee has been accepted. An electronic copy of the petition and this decision has been created as an entry in the Image File Wrapper. Nevertheless, petitioner should print and retain an independent copy.

Telephone inquiries related to this electronic decision should be directed to the Electronic Business Center at 1-866-217-9197.

PTO/SB/66 (03-09)
Approved for use through 03/31/2012. OMB 0651-0016
U.S. Patent and Trademark Office: U.S. DEPARTMENT OF COMMERCE
Under the Paperwork Reduction Act of 1995, no persons are required to respond to a collection of information unless it displays valid OMB control number.

PETITION TO ACCEPT UNINTENTIONALLY DELAYED PAYMENT OF MAINTENANCE FEE IN AN EXPIRED PATENT (37 CFR 1.378(c))

Patent Number	Issue Date (YYYY-MM-DD)	Application Number	Filing Date (YYYY-MM-DD)	Docket Number (if applicable)
6265128	2001-07-24	08970424	1997-11-14	181.001

CAUTION: Maintenance fee (and surcharge, if any) payment must correctly identify: (1) the patent number and (2) the application number of the actual U.S. application leading to issuance of that patent to ensure the fee(s) is/are associated with the correct patent. 37 CFR 1.366(c) and (d).

SMALL ENTITY
☐ Patentee claims, or has previously claimed, small entity status. See 37 CFR 1.27.

LOSS OF ENTITLEMENT TO SMALL ENTITY STATUS
☒ Patentee is no longer entitled to small entity status. See 37 CFR 1.27(g)

NOT Small Entity		Small Entity	
Fee	Code	Fee	Code
○ 3 ½ year	(1551)	○ 3 ½ year	(2551)
◉ 7 ½ year	(1552)	○ 7 ½ year	(2552)
○ 11 ½ year	(1553)	○ 11 ½ year	(2553)

SURCHARGE
The surcharge required by 37 CFR 1.20(i)(2) (Fee Code 1558) must be paid as a condition of accepting unintentionally delayed payment of the maintenance fee.

MAINTENANCE FEE (37 CFR 1.20(e)-(g))
The appropriate maintenance fee must be submitted with this petition.

STATEMENT
THE UNDERSIGNED CERTIFIES THAT THE DELAY IN PAYMENT OF THE MAINTENANCE FEE TO THIS PATENT WAS UNINTENTIONAL

PETITIONER(S) REQUEST THAT THE DELAYED PAYMENT OF THE MAINTENANCE FEE BE ACCEPTED AND THE PATENT REINSTATED

THIS PORTION MUST BE COMPLETED BY THE SIGNATORY OR SIGNATORIES

37 CFR 1.378(d) states: "Any petition under this section must be signed by an attorney or agent registered to practice before the Patent and Trademark Office, or by the patentee, the assignee, or other party in interest."

I certify, in accordance with 37 CFR 1.4(d)(4) that I am

◉ An attorney or agent registered to practice before the Patent and Trademark Office

○ A sole patentee

○ A joint patentee; I certify that I am authorized to sign this submission on behalf of all the other patentees.

○ A joint patentee; all of whom are signing this e-petition

○ The assignee of record of the entire interest

Patent Practitioner			
A signature of the applicant or representative is required in accordance with 37 CFR 1.33 and 10.18. Please see 37 CFR 1.4(d) for the form of the signature			
Signature	/Mitchell A. Smolow/	Date (YYYY-MM-DD)	2009-10-19
Name	Mitchell A. Smolow	Registration Number	43140

This collection of information is required by 37 CFR 1.378(c). The information is required to obtain or retain a benefit by the public which is to file (and by the USPTO to process) an application. Confidentiality is governed by 35 U.S.C. 122 and 37 CFR 1.11 and 1.14. This collection is estimated to take 1 hour to complete, including gathering, preparing, and submitting the completed application form to the USPTO. Time will vary depending upon the individual case. Any comments on the amount of time you require to complete this form and/ or suggestions for reducing this burden, should be sent to the Chief Information Officer, U.S. Patent and Trademark Office, U.S. Department of Commerce, P.O. Box 1450, Alexandria, VA 22313-1450. DO NOT SEND FEES OR COMPLETED FORMS TO THIS ADDRESS. **This form can only be used when in conjunction with EFS-Web. If this form is mailed to the USPTO, it may cause delays in reinstating the patent.**

Privacy Act Statement

The Privacy Act of 1974 (P.L. 93-579) requires that you be given certain information in connection with your submission of the attached form related to a patent application or patent. Accordingly, pursuant to the requirements of the Act, please be advised that: (1) the general authority for the collection of this information is 35 U.S.C. 2(b)(2); (2) furnishing of the information solicited is voluntary; and (3) the principal purpose for which the information is used by the U.S. Patent and Trademark Office is to process and/or examine your submission related to a patent application or patent. If you do not furnish the requested information, the U.S. Patent and Trademark Office may not be able to process and/or examine your submission, which may result in termination of proceedings or abandonment of the application or expiration of the patent.

The information provided by you in this form will be subject to the following routine uses:

1. The information on this form will be treated confidentially to the extent allowed under the Freedom of Information Act (5 U.S.C. 552) and the Privacy Act (5 U.S.C. 552a). Records from this system of records may be disclosed to the Department of Justice to determine whether the Freedom of Information Act requires disclosure of these records.

2. A record from this system of records may be disclosed, as a routine use, in the course of presenting evidence to a court, magistrate, or administrative tribunal, including disclosures to opposing counsel in the course of settlement negotiations.

3. A record in this system of records may be disclosed, as a routine use, to a Member of Congress submitting a request involving an individual, to whom the record pertains, when the individual has requested assistance from the Member with respect to the subject matter of the record.

4. A record in this system of records may be disclosed, as a routine use, to a contractor of the Agency having need for the information in order to perform a contract. Recipients of information shall be required to comply with the requirements of the Privacy Act of 1974, as amended, pursuant to 5 U.S.C. 552a(m).

5. A record related to an International Application filed under the Patent Cooperation Treaty in this system of records may be disclosed, as a routine use, to the International Bureau of the World Intellectual Property Organization, pursuant to the Patent Cooperation Treaty.

6. A record in this system of records may be disclosed, as a routine use, to another federal agency for purposes of National Security review (35 U.S.C. 181) and for review pursuant to the Atomic Energy Act (42 U.S.C. 218(c)).

7. A record from this system of records may be disclosed, as a routine use, to the Administrator, General Services, or his/her designee, during an inspection of records conducted by GSA as part of that agency's responsibility to recommend improvements in records management practices and programs, under authority of 44 U.S.C. 2904 and 2906. Such disclosure shall be made in accordance with the GSA regulations governing inspection of records for this purpose, and any other relevant (i.e., GSA or Commerce) directive. Such disclosure shall not be used to make determinations about individuals.

8. A record from this system of records may be disclosed, as a routine use, to the public after either publication of the application pursuant to 35 U.S.C. 122(b) or issuance of a patent pursuant to 35 U.S.C. 151. Further, a record may be disclosed, subject to the limitations of 37 CFR 1.14, as a routine use, to the public if the record was filed in an application which became abandoned or in which the proceedings were terminated and which application is referenced by either a published application, an application open to public inspections or an issued patent.

9. A record from this system of records may be disclosed, as a routine use, to a Federal, State, or local law enforcement agency, if the USPTO becomes aware of a violation or potential violation of law or regulation.

UNITED STATES PATENT AND TRADEMARK OFFICE

COMMISSIONER FOR PATENTS
UNITED STATES PATENT AND TRADEMARK OFFICE
WASHINGTON, D.C. 20231
www.uspto.gov

Paper No. 17

HAMILTON BROOK SMITH & REYNOLDS P.C.
TWO MILITIA DRIVE
LEXINGTON, MA 02421-4799

COPY MAILED

JAN 17 2001

OFFICE OF PETITIONS
A/C PATENTS

In re Patent No. 5,985,309 :
Issue Date: November 16, 1999 :
Application No. 08/971,791 : ON PETITION
Filed: November 17, 1997 :
Attorney Docket No. MIT-7513/7804 :

This is a decision on the petition under 37 CFR 1.183, filed October 27, 2000, to waive the rules and accept the correction of the assignee on the front page of the above-identified patent. The petition is also being treated as a petition under 37 CFR 1.181 requesting review of the denial of the Decisions & Certificates of Correction Branch's decision mailed July 19, 2000 refusing issuance of a certificate of correction without a grantable petition under 37 CFR 1.183.

The request to review the decision of the Decisions & Certificates of Correction Branch is granted to the extent that the decision has been reviewed but is dismissed with respect to making any changes therein.

The petition under 37 CFR 1.183 is granted.

Petitioner contends that the denial of the request for a certificate of correction to add "The Penn State Research Foundation" as an assignee on the front page of the Letters Patent is in error since petitioner's postcard receipt stamped by the USPTO indicated that both the Issue Fee Transmittal sheet and Part B - Issue Fee Transmittal Addendum, which sets forth the second assignee's name, were received.

A review of the file record indicates that the addendum to the Issue Fee Transmittal Form PTOL-85(b) was in fact received. However, in reviewing the Issue Fee Transmittal Form, it is noted that the form fails to draw any attention whatsoever to the fact that an addendum containing a second assignee's name is attached. Without such information being provided on the form, the printers will

not normally look for information contained in another paper filed therewith generally intended for another purpose, such as certificate of mailing information or itemization of papers being submitted. The Office prints the information to be printed on the patent solely from the Issue Fee Transmittal Form, unless otherwise specifically indicated thereon.

Note MPEP Section 307, which states that "[u]nless an assignee's name and address are identified in item 3 of the Issue Fee Transmittal form PTOL-85B, the patent will issue to the applicant. Assignment data printed on the patent will be based solely on the information so supplied." MPEP Section 307 also states that a request for a certificate of correction arising from incomplete or erroneous assignee's name furnished in item 3 of PTOL-85B will not be granted unless a petition under 37 CFR 1.183 has been granted.

In the instant case, item 3 of PTOL-85B contains incomplete information, i.e., an indication to note the second assignee's name and address on the addendum accompanying the Issue Fee Transmittal Form or the inclusion thereon of the second assignee's name and address. Therefore, petitioner's failure to indicate on the Issue Fee Transmittal Form the existence of a second assignee on an addendum resulted in the omission of the assignee information now sought to be added by way of a certificate of correction on the front page of the Letters Patent. Therefore, the failure to print the second assignee's name on the Letters Patent cannot be considered an error on the part of the PTO. Therefore, petitioner's request for a certificate of correction without fee must be dismissed.

Telephone inquiries concerning this matter may be directed to Frances Hicks at (703) 305-8680. Any questions concerning the issuance of the Certificate of Correction should be directed to the Certificates of Correction Branch at (703) 305-8309.

The file is being forwarded to the Certificates of Correction Branch for issuance of the requested Certificate of Correction.

Frances Hicks

Frances Hicks
Petitions Examiner
Office of Petitions
Office of the Deputy Commissioner
for Patent Examination Policy

UNITED STATES PATENT AND TRADEMARK OFFICE

COMMISSIONER FOR PATENTS
UNITED STATES PATENT AND TRADEMARK OFFICE
P.O. BOX 1450
ALEXANDRIA, VA 22313-1450
www.uspto.gov

HUMAN GENOME SCIENCES INC
INTELLECTUAL PROPERTY DEPT.
14200 SHADY GROVE ROAD
ROCKVILLE MD 20850

COPY MAILED

NOV 07 2005

OFFICE OF PETITIONS

In re Application of	:
Coleman et al.	:
U.S. Patent No. 6,864,226	: Decision on Petition for
Application No. 08/972,301	: Patent Term Extension
Filed: November 18, 1997	:
For: ENDOTHELIAL-MONOCYTE	:
ACTIVATING POLYPEPTIDE III	:

The above-identified application has been forwarded to the undersigned for consideration on a petition for patent term extension entitled "Letter Regarding Patent Term Extension Calculation" received April 1, 2005.

The petition is granted.

Petitioner notes that the above-identified application was suspended by the Office on July 2, 2001 and again on August 12, 2002 for a potential interference. Petitioner states that while he requested that an interference be declared, he is not aware of an interference being declared.

The Notice of Allowance and Issue Fee Due mailed on May 6, 2004, incorrectly indicated that the patent to issue from the application 08/972,301 is eligible for a 407 day extension, where a no extension is due. The front page of the patent incorrectly indicates that the term of the patent is extended for 407 days.

The petition is GRANTED.

The patent statute only permits extension of patent term based on very specific criteria. The Office has no authority to grant any extension or adjustment of the term due to administrative delays except as authorized by 35 U.S.C. § 154. 35 U.S.C. § 154 provides for patent term extension for appellate review, interference and secrecy order delays in utility and plant applications filed on or after June 8, 1995, and, as amended by the "American Inventors Protection Act of 1999," enacted November 29, 1999, as part of Public Law 106-113, for other specifically defined administrative delays in utility and plant applications filed on or after May 29, 2000.

Although prosecution was suspended in the above-identified application, the suspensions were due to a potential interference with applicants' application with other applications, not to await the result of an interference proceeding in another application. As a result, the provisions of 37 CFR 1.701(c)(1)(ii) do not apply. Thus, the patent is not eligible for patent term extension.

After mailing of this decision, the application will be forwarded to the Certificate of Correction Branch. The Office will issue a certificate of correction in order to rectify the error regarding the patent term extension information. See 35 U.S.C. 254 and 37 CFR 1.322. The Office will issue a certificate of correction indicating that the patent term is extended by **0 days.**

Petitioner's deposit account has not been charged a petition fee.

Telephone inquiries with regard to this communication should be directed to Mark O. Polutta at (571) 272-7709.

Mark O. Polutta
Senior Legal Advisor
Office of Patent Legal Administration
Office of the Deputy Commissioner
for Patent Examination Policy

UNITED STATES PATENT AND TRADEMARK OFFICE

COMMISSIONER FOR PATENTS
UNITED STATES PATENT AND TRADEMARK OFFICE
WASHINGTON, D.C. 20231
www.uspto.gov

Paper No. 25

Madson & Metcalf
15 West South Temple
Suite 900
Salt Lake City, UT 84101

COPY MAILED
SEP 27 2002
OFFICE OF PETITIONS

In re Application of	:	
Thomas Boone Pickens, III	:	
Application No. 08/972,313	:	ON PETITION
Filed: November 18, 1997	:	
Attorney Docket No. 2281	:	

This is a decision on the petition under 37 CFR 1.137(b), filed June 5, 2002, to revive the above-identified application.

The petition is **GRANTED**.

The above-identified application became abandoned for failure to reply in a timely manner to the non-final Office action mailed March 14, 2000, which set a shortened statutory period for reply of three (3) months. No extensions of time under the provisions of 37 CFR 1.136(a) were obtained. Accordingly, the above-identified application became abandoned on June 15, 2000.

The above-identified application has been abandoned for an extended period of time. The Patent and Trademark Office is relying on petitioner's duty of candor and good faith and accepting the statement that the entire delay in filing the required reply from the due date for the reply until the filing of a grantable petition pursuant to 37 CFR 1.137(b) was unintentional. See Changes to Patent Practice and Procedure, 62 Fed. Reg. at 53160 and 53178, 1203 Off. Gaz. Pat. Office at 88 and 103 (responses to comments 64 and 109)(applicant obligated under 37 CFR 10.18 to inquire into the underlying facts and circumstances when providing the statement required by 37 CFR 1.137(b) to the Patent and Trademark Office).

Telephone inquiries concerning this decision should be directed to Cheryl Gibson-Baylor at (703)308-5111, or in her absence, Frances Hicks at (703)305-8680.

The application file is being forwarded to Technology Center 2800, Art Unit 2876.

Cheryl Gibson-Baylor
Cheryl Gibson-Baylor
Petitions Examiner
Office of Petitions
Office of the Deputy Commissioner
for Patent Examination Policy

Karen Creasy for
Frances Hicks
Petitions Examiner

UNITED STATES PATENT AND TRADEMARK OFFICE

Commissioner for Patents
United States Patent and Trademark Office
P.O. Box 1450
Alexandria, VA 22313-1450
www.uspto.gov

In re Patent No. 5983377
Issue Date: November 9,1999
Application No. 08972352
Filed: November 17,1997
Attorney Docket No. 7355

:
:DECISION GRANTING PETITION
:UNDER 37 CFR 1.378(c)
:

This is a decision on the electronic petition, filed August 19,2008 ,under 37 CFR 1.378(c) to accept the unintentionally delayed payment of the 7.5 year maintenance fee for the above-identified patent.

The petition is **GRANTED**.

The maintenance fee is accepted, and the above-identified patent reinstated as of August 19,2008 . This decision also constitutes notice that the fee has been accepted. An electronic copy of the petition and this decision has been created as an entry in the Image File Wrapper. Nevertheless, petitioner should print and retain an independent copy.

Telephone inquiries related to this electronic decision should be directed to the Electronic Business Center at 1-866-217-9197.

Under the Paperwork Reduction Act of 1995, no persons are required to respond to a collection of information unless it displays valid OMB control number.

PETITION TO ACCEPT UNINTENTIONALLY DELAYED PAYMENT OF MAINTENANCE FEE IN AN EXPIRED PATENT (37 CFR 1.378(c))

Patent Number	Issue Date (YYYY-MM-DD)	Application Number	Filing Date (YYYY-MM-DD)	Docket Number (if applicable)
5983377	1999-11-09	08972352	1997-11-17	7355

CAUTION: Maintenance fee (and surcharge, if any) payment must correctly identify: (1) the patent number and (2) the application number of the actual U.S. application leading to issuance of that patent to ensure the fee(s) is/are associated with the correct patent. 37 CFR 1.366(c) and (d).

SMALL ENTITY
☐ Patentee claims, or has previously claimed, small entity status. See 37 CFR 1.27.

LOSS OF ENTITLEMENT TO SMALL ENTITY STATUS
☐ Patentee is no longer entitled to small entity status. See 37 CFR 1.27(g)

NOT Small Entity

	Fee	Code
○	3 ½ year	(1551)
◉	7 ½ year	(1552)
○	11 ½ year	(1553)

Small Entity

	Fee	Code
○	3 ½ year	(2551)
○	7 ½ year	(2552)
○	11 ½ year	(2553)

SURCHARGE
The surcharge required by 37 CFR 1.20(i)(2) (Fee Code 1558) must be paid as a condition of accepting unintentionally delayed payment of the maintenance fee.

MAINTENANCE FEE (37 CFR 1.20(e)-(g))
The appropriate maintenance fee must be submitted with this petition.

STATEMENT
THE UNDERSIGNED CERTIFIES THAT THE DELAY IN PAYMENT OF THE MAINTENANCE FEE TO THIS PATENT WAS UNINTENTIONAL

PETITIONER(S) REQUEST THAT THE DELAYED PAYMENT OF THE MAINTENANCE FEE BE ACCEPTED AND THE PATENT REINSTATED

THIS PORTION MUST BE COMPLETED BY THE SIGNATORY OR SIGNATORIES

37 CFR 1.378(d) states: "Any petition under this section must be signed by an attorney or agent registered to practice before the Patent and Trademark Office, or by the patentee, the assignee, or other party in interest."

I certify, in accordance with 37 CFR 1.4(d)(4) that I am

◉ An attorney or agent registered to practice before the Patent and Trademark Office

○ A sole patentee

○ A joint patentee; I certify that I am authorized to sign this submission on behalf of all the other patentees.

○ A joint patentee; all of whom are signing this e-petition

○ The assignee of record of the entire interest

Patent Practitioner			
A signature of the applicant or representative is required in accordance with 37 CFR 1.33 and 10.18. Please see 37 CFR 1.4(d) for the form of the signature			
Signature	/Adam A Bennett/	Date (YYYY-MM-DD)	2008-08-19
Name	Adam A. Bennett	Registration Number	57849

This collection of information is required by 37 CFR 1.378(c). The information is required to obtain or retain a benefit by the public which is to file (and by the USPTO to process) an application. Confidentiality is governed by 35 U.S.C. 122 and 37 CFR 1.11 and 1.14. This collection is estimated to take 1 hour to complete, including gathering, preparing, and submitting the completed application form to the USPTO. Time will vary depending upon the individual case. Any comments on the amount of time you require to complete this form and/ or suggestions for reducing this burden, should be sent to the Chief Information Officer, U.S. Patent and Trademark Office, U.S. Department of Commerce, P.O. Box 1450, Alexandria, VA 22313-1450. DO NOT SEND FEES OR COMPLETED FORMS TO THIS ADDRESS. **This form can only be used when in conjunction with EFS-Web. If this form is mailed to the USPTO, it may cause delays in reinstating the patent.**

Privacy Act Statement

The Privacy Act of 1974 (P.L. 93-579) requires that you be given certain information in connection with your submission of the attached form related to a patent application or patent. Accordingly, pursuant to the requirements of the Act, please be advised that: (1) the general authority for the collection of this information is 35 U.S.C. 2(b)(2); (2) furnishing of the information solicited is voluntary; and (3) the principal purpose for which the information is used by the U.S. Patent and Trademark Office is to process and/or examine your submission related to a patent application or patent. If you do not furnish the requested information, the U.S. Patent and Trademark Office may not be able to process and/or examine your submission, which may result in termination of proceedings or abandonment of the application or expiration of the patent.

The information provided by you in this form will be subject to the following routine uses:

1. The information on this form will be treated confidentially to the extent allowed under the Freedom of Information Act (5 U.S.C. 552) and the Privacy Act (5 U.S.C. 552a). Records from this system of records may be disclosed to the Department of Justice to determine whether the Freedom of Information Act requires disclosure of these record s.

2. A record from this system of records may be disclosed, as a routine use, in the course of presenting evidence to a court, magistrate, or administrative tribunal, including disclosures to opposing counsel in the course of settlement negotiations.

3. A record in this system of records may be disclosed, as a routine use, to a Member of Congress submitting a request involving an individual, to whom the record pertains, when the individual has requested assistance from the Member with respect to the subject matter of the record.

4. A record in this system of records may be disclosed, as a routine use, to a contractor of the Agency having need for the information in order to perform a contract. Recipients of information shall be required to comply with the requirements of the Privacy Act of 1974, as amended, pursuant to 5 U.S.C. 552a(m).

5. A record related to an International Application filed under the Patent Cooperation Treaty in this system of records may be disclosed, as a routine use, to the International Bureau of the World Intellectual Property Organization, pursuant to the Patent Cooperation Treaty.

6. A record in this system of records may be disclosed, as a routine use, to another federal agency for purposes of National Security review (35 U.S.C. 181) and for review pursuant to the Atomic Energy Act (42 U.S.C. 218(c)).

7. A record from this system of records may be disclosed, as a routine use, to the Administrator, General Services, or his/her designee, during an inspection of records conducted by GSA as part of that agency's responsibility to recommend improvements in records management practices and programs, under authority of 44 U.S.C. 2904 and 2906. Such disclosure shall be made in accordance with the GSA regulations governing inspection of records for this purpose, and any other relevant (i.e., GSA or Commerce) directive. Such disclosure shall not be used to make determinations about individuals.

8. A record from this system of records may be disclosed, as a routine use, to the public after either publication of the application pursuant to 35 U.S.C. 122(b) or issuance of a patent pursuant to 35 U.S.C. 151. Further, a record may be disclosed, subject to the limitations of 37 CFR 1.14, as a routine use, to the public if the record was filed in an application which became abandoned or in which the proceedings were terminated and which application is referenced by either a published application, an application open to public inspections or an issued patent.

9. A record from this system of records may be disclosed, as a routine use, to a Federal, State, or local law enforcement agency, if the USPTO becomes aware of a violation or potential violation of law or regulation.

UNITED STATES PATENT AND TRADEMARK OFFICE

Commissioner for Patents
United States Patent and Trademark Office
P.O. Box 1450
Alexandria, VA 22313-1450
www.uspto.gov

In re Patent No. 6151281
Issue Date: November 21,2000
Application No. 08972756
Filed: November 18,1997
Attorney Docket No. PHN-16.269

:
:DECISION GRANTING PETITION
:UNDER 37 CFR 1.378(c)
:

This is a decision on the electronic petition, filed June 2,2009 ,under 37 CFR 1.378(c) to accept the unintentionally delayed payment of the 7.5 year maintenance fee for the above-identified patent.

The petition is **GRANTED**.

The maintenance fee is accepted, and the above-identified patent reinstated as of June 2,2009 . This decision also constitutes notice that the fee has been accepted. An electronic copy of the petition and this decision has been created as an entry in the Image File Wrapper. Nevertheless, petitioner should print and retain an independent copy.

Telephone inquiries related to this electronic decision should be directed to the Electronic Business Center at 1-866-217-9197.

PTO/SB/66 (03-09)
Approved for use through 03/31/2012. OMB 0651-0016
U.S. Patent and Trademark Office: U.S. DEPARTMENT OF COMMERCE
Under the Paperwork Reduction Act of 1995, no persons are required to respond to a collection of information unless it displays valid OMB control number.

PETITION TO ACCEPT UNINTENTIONALLY DELAYED PAYMENT OF MAINTENANCE FEE IN AN EXPIRED PATENT (37 CFR 1.378(c))

Patent Number	Issue Date (YYYY-MM-DD)	Application Number	Filing Date (YYYY-MM-DD)	Docket Number (if applicable)
6151281	2000-11-21	08972756	1997-11-18	

CAUTION: Maintenance fee (and surcharge, if any) payment must correctly identify: (1) the patent number and (2) the application number of the actual U.S. application leading to issuance of that patent to ensure the fee(s) is/are associated with the correct patent. 37 CFR 1.366(c) and (d).

SMALL ENTITY
☐ Patentee claims, or has previously claimed, small entity status. See 37 CFR 1.27.

LOSS OF ENTITLEMENT TO SMALL ENTITY STATUS
☐ Patentee is no longer entitled to small entity status. See 37 CFR 1.27(g)

NOT Small Entity		Small Entity	
Fee	Code	Fee	Code
○ 3 ½ year	(1551)	○ 3 ½ year	(2551)
◉ 7 ½ year	(1552)	○ 7 ½ year	(2552)
○ 11 ½ year	(1553)	○ 11 ½ year	(2553)

SURCHARGE
The surcharge required by 37 CFR 1.20(i)(2) (Fee Code 1558) must be paid as a condition of accepting unintentionally delayed payment of the maintenance fee.

MAINTENANCE FEE (37 CFR 1.20(e)-(g))
The appropriate maintenance fee must be submitted with this petition.

STATEMENT
THE UNDERSIGNED CERTIFIES THAT THE DELAY IN PAYMENT OF THE MAINTENANCE FEE TO THIS PATENT WAS UNINTENTIONAL

PETITIONER(S) REQUEST THAT THE DELAYED PAYMENT OF THE MAINTENANCE FEE BE ACCEPTED AND THE PATENT REINSTATED

THIS PORTION MUST BE COMPLETED BY THE SIGNATORY OR SIGNATORIES

37 CFR 1.378(d) states: "Any petition under this section must be signed by an attorney or agent registered to practice before the Patent and Trademark Office, or by the patentee, the assignee, or other party in interest."

I certify, in accordance with 37 CFR 1.4(d)(4) that I am

◉ An attorney or agent registered to practice before the Patent and Trademark Office

○ A sole patentee

○ A joint patentee; I certify that I am authorized to sign this submission on behalf of all the other patentees.

○ A joint patentee; all of whom are signing this e-petition

○ The assignee of record of the entire interest

Patent Practitioner			
A signature of the applicant or representative is required in accordance with 37 CFR 1.33 and 10.18. Please see 37 CFR 1.4(d) for the form of the signature			
Signature	/Michael E Marion/	Date (YYYY-MM-DD)	2009-05-18
Name	Michael E. Marion	Registration Number	32266

This collection of information is required by 37 CFR 1.378(c). The information is required to obtain or retain a benefit by the public which is to file (and by the USPTO to process) an application. Confidentiality is governed by 35 U.S.C. 122 and 37 CFR 1.11 and 1.14. This collection is estimated to take 1 hour to complete, including gathering, preparing, and submitting the completed application form to the USPTO. Time will vary depending upon the individual case. Any comments on the amount of time you require to complete this form and/ or suggestions for reducing this burden, should be sent to the Chief Information Officer, U.S. Patent and Trademark Office, U.S. Department of Commerce, P.O. Box 1450, Alexandria, VA 22313-1450. DO NOT SEND FEES OR COMPLETED FORMS TO THIS ADDRESS. **This form can only be used when in conjunction with EFS-Web. If this form is mailed to the USPTO, it may cause delays in reinstating the patent.**

Privacy Act Statement

The Privacy Act of 1974 (P.L. 93-579) requires that you be given certain information in connection with your submission of the attached form related to a patent application or patent. Accordingly, pursuant to the requirements of the Act, please be advised that: (1) the general authority for the collection of this information is 35 U.S.C. 2(b)(2); (2) furnishing of the information solicited is voluntary; and (3) the principal purpose for which the information is used by the U.S. Patent and Trademark Office is to process and/or examine your submission related to a patent application or patent. If you do not furnish the requested information, the U.S. Patent and Trademark Office may not be able to process and/or examine your submission, which may result in termination of proceedings or abandonment of the application or expiration of the patent.

The information provided by you in this form will be subject to the following routine uses:

1. The information on this form will be treated confidentially to the extent allowed under the Freedom of Information Act (5 U.S.C. 552) and the Privacy Act (5 U.S.C. 552a). Records from this system of records may be disclosed to the Department of Justice to determine whether the Freedom of Information Act requires disclosure of these records.

2. A record from this system of records may be disclosed, as a routine use, in the course of presenting evidence to a court, magistrate, or administrative tribunal, including disclosures to opposing counsel in the course of settlement negotiations.

3. A record in this system of records may be disclosed, as a routine use, to a Member of Congress submitting a request involving an individual, to whom the record pertains, when the individual has requested assistance from the Member with respect to the subject matter of the record.

4. A record in this system of records may be disclosed, as a routine use, to a contractor of the Agency having need for the information in order to perform a contract. Recipients of information shall be required to comply with the requirements of the Privacy Act of 1974, as amended, pursuant to 5 U.S.C. 552a(m).

5. A record related to an International Application filed under the Patent Cooperation Treaty in this system of records may be disclosed, as a routine use, to the International Bureau of the World Intellectual Property Organization, pursuant to the Patent Cooperation Treaty.

6. A record in this system of records may be disclosed, as a routine use, to another federal agency for purposes of National Security review (35 U.S.C. 181) and for review pursuant to the Atomic Energy Act (42 U.S.C. 218(c)).

7. A record from this system of records may be disclosed, as a routine use, to the Administrator, General Services, or his/her designee, during an inspection of records conducted by GSA as part of that agency's responsibility to recommend improvements in records management practices and programs, under authority of 44 U.S.C. 2904 and 2906. Such disclosure shall be made in accordance with the GSA regulations governing inspection of records for this purpose, and any other relevant (i.e., GSA or Commerce) directive. Such disclosure shall not be used to make determinations about individuals.

8. A record from this system of records may be disclosed, as a routine use, to the public after either publication of the application pursuant to 35 U.S.C. 122(b) or issuance of a patent pursuant to 35 U.S.C. 151. Further, a record may be disclosed, subject to the limitations of 37 CFR 1.14, as a routine use, to the public if the record was filed in an application which became abandoned or in which the proceedings were terminated and which application is referenced by either a published application, an application open to public inspections or an issued patent.

9. A record from this system of records may be disclosed, as a routine use, to a Federal, State, or local law enforcement agency, if the USPTO becomes aware of a violation or potential violation of law or regulation.

UNITED STATES PATENT AND TRADEMARK OFFICE

COMMISSIONER FOR PATENTS
UNITED STATES PATENT AND TRADEMARK OFFICE
P.O. BOX 1450
ALEXANDRIA, VA 22313-1450
www.uspto.gov

Paper No. 12

William B. Patterson
Moser Patterson & Sheridan, LLP
3040 Post Oak Blvd., Suite 1500
Houston, TX 77056

COPY MAILED

OCT 1 0 2003

OFFICE OF PETITIONS

In re Application of :
Douglas Caraway :
Application No. 08/972,781 :
Filed: November 18, 1997 :
Attorney Docket No. WEAT/0409 :

ON PETITION

This is a decision on the petition under 37 CFR 1.137(b) filed September 29, 2003, to revive the above-identified application.

The petition is **GRANTED**.

The above-identified application became abandoned for failure to reply in a timely manner to the non-final office action mailed May 24, 1999, which set a shortened statutory period for reply of three months. No extensions of time under the provisions of 37 CFR 1.136 have been obtained. Accordingly, the application became abandoned on August 25, 1999.

The application file is being forwarded to Technology Center AU 3672 for further processing.

Telephone inquiries regarding this decision should be directed to the undersigned at (703) 308-6911.

Latrice Bond

Latrice Bond
Paralegal Specialist
Office of Petitions
Office of the Deputy Commissioner
for Patent Examination Policy

Approved for use through 04/30/2009. OMB 0651-0016
U.S. Patent and Trademark Office: U.S. DEPARTMENT OF COMMERCE
Under the Paperwork Reduction Act of 1995, no persons are required to respond to a collection of information unless it displays valid OMB control number.

PETITION TO ACCEPT UNINTENTIONALLY DELAYED PAYMENT OF MAINTENANCE FEE IN AN EXPIRED PATENT (37 CFR 1.378(c))

Patent Number	Issue Date (YYYY-MM-DD)	Application Number	Filing Date (YYYY-MM-DD)	Docket Number (if applicable)
5,912,784	1999-06-15	08/972,881	1997-11-18	501.48601X00

CAUTION: Maintenance fee (and surcharge, if any) payment must correctly identify: (1) the patent number and (2) the application number of the actual U.S. application leading to issuance of that patent to ensure the fee(s) is/are associated with the correct patent. 37 CFR 1.366(c) and (d).

SMALL ENTITY
☐ Patentee claims, or has previously claimed, small entity status. See 37 CFR 1.27.

LOSS OF ENTITLEMENT TO SMALL ENTITY STATUS
☐ Patentee is no longer entitled to small entity status. See 37 CFR 1.27(g)

NOT Small Entity		Small Entity	
Fee	Code	Fee	Code
○ 3 ½ year	(1551)	○ 3 ½ year	(2551)
◉ 7 ½ year	(1552)	○ 7 ½ year	(2552)
○ 11 ½ year	(1553)	○ 11 ½ year	(2553)

SURCHARGE
The surcharge required by 37 CFR 1.20(i)(2) (Fee Code 1558) must be paid as a condition of accepting unintentionally delayed payment of the maintenance fee.

MAINTENANCE FEE (37 CFR 1.20(e)-(g))
The appropriate maintenance fee must be submitted with this petition.

STATEMENT
THE UNDERSIGNED CERTIFIES THAT THE DELAY IN PAYMENT OF THE MAINTENANCE FEE TO THIS PATENT WAS UNINTENTIONAL

PETITIONER(S) REQUEST THAT THE DELAYED PAYMENT OF THE MAINTENANCE FEE BE ACCEPTED AND THE PATENT REINSTATED

THIS PORTION MUST BE COMPLETED BY THE SIGNATORY OR SIGNATORIES

37 CFR 1.378(d) states: "Any petition under this section must be signed by an attorney or agent registered to practice before the Patent and Trademark Office, or by the patentee, the assignee, or other party in interest."

I certify, in accordance with 37 CFR 1.4(d)(4) that I am

◉ An attorney or agent registered to practice before the Patent and Trademark Office

○ A sole patentee

○ A joint patentee; I certify that I am authorized to sign this submission on behalf of all the other patentees.

○ A joint patentee; all of whom are signing this e-petition

○ The assignee of record of the entire interest

Patent Practitioner			
A signature of the applicant or representative is required in accordance with 37 CFR 1.33 and 10.18. Please see 37 CFR 1.4(d) for the form of the signature			
Signature	/Alan E. Schiavelli/	Date (YYYY-MM-DD)	2008-03-05
Name	Alan E. Schiavelli	Registration Number	32087

This collection of information is required by 37 CFR 1.378(c). The information is required to obtain or retain a benefit by the public which is to file (and by the USPTO to process) an application. Confidentiality is governed by 35 U.S.C. 122 and 37 CFR 1.11 and 1.14. This collection is estimated to take 1 hour to complete, including gathering, preparing, and submitting the completed application form to the USPTO. Time will vary depending upon the individual case. Any comments on the amount of time you require to complete this form and/ or suggestions for reducing this burden, should be sent to the Chief Information Officer, U.S. Patent and Trademark Office, U.S. Department of Commerce, P.O. Box 1450, Alexandria, VA 22313-1450. DO NOT SEND FEES OR COMPLETED FORMS TO THIS ADDRESS. **This form can only be used when in conjunction with EFS-Web. If this form is mailed to the USPTO, it may cause delays in reinstating the patent.**

Privacy Act Statement

The Privacy Act of 1974 (P.L. 93-579) requires that you be given certain information in connection with your submission of the attached form related to a patent application or patent. Accordingly, pursuant to the requirements of the Act, please be advised that: (1) the general authority for the collection of this information is 35 U.S.C. 2(b)(2); (2) furnishing of the information solicited is voluntary; and (3) the principal purpose for which the information is used by the U.S. Patent and Trademark Office is to process and/or examine your submission related to a patent application or patent. If you do not furnish the requested information, the U.S. Patent and Trademark Office may not be able to process and/or examine your submission, which may result in termination of proceedings or abandonment of the application or expiration of the patent.

The information provided by you in this form will be subject to the following routine uses:

1. The information on this form will be treated confidentially to the extent allowed under the Freedom of Information Act (5 U.S.C. 552) and the Privacy Act (5 U.S.C. 552a). Records from this system of records may be disclosed to the Department of Justice to determine whether the Freedom of Information Act requires disclosure of these record s.

2. A record from this system of records may be disclosed, as a routine use, in the course of presenting evidence to a court, magistrate, or administrative tribunal, including disclosures to opposing counsel in the course of settlement negotiations.

3. A record in this system of records may be disclosed, as a routine use, to a Member of Congress submitting a request involving an individual, to whom the record pertains, when the individual has requested assistance from the Member with respect to the subject matter of the record.

4. A record in this system of records may be disclosed, as a routine use, to a contractor of the Agency having need for the information in order to perform a contract. Recipients of information shall be required to comply with the requirements of the Privacy Act of 1974, as amended, pursuant to 5 U.S.C. 552a(m).

5. A record related to an International Application filed under the Patent Cooperation Treaty in this system of records may be disclosed, as a routine use, to the International Bureau of the World Intellectual Property Organization, pursuant to the Patent Cooperation Treaty.

6. A record in this system of records may be disclosed, as a routine use, to another federal agency for purposes of National Security review (35 U.S.C. 181) and for review pursuant to the Atomic Energy Act (42 U.S.C. 218(c)).

7. A record from this system of records may be disclosed, as a routine use, to the Administrator, General Services, or his/her designee, during an inspection of records conducted by GSA as part of that agency's responsibility to recommend improvements in records management practices and programs, under authority of 44 U.S.C. 2904 and 2906. Such disclosure shall be made in accordance with the GSA regulations governing inspection of records for this purpose, and any other relevant (i.e., GSA or Commerce) directive. Such disclosure shall not be used to make determinations about individuals.

8. A record from this system of records may be disclosed, as a routine use, to the public after either publication of the application pursuant to 35 U.S.C. 122(b) or issuance of a patent pursuant to 35 U.S.C. 151. Further, a record may be disclosed, subject to the limitations of 37 CFR 1.14, as a routine use, to the public if the record was filed in an application which became abandoned or in which the proceedings were terminated and which application is referenced by either a published application, an application open to public inspections or an issued patent.

9. A record from this system of records may be disclosed, as a routine use, to a Federal, State, or local law enforcement agency, if the USPTO becomes aware of a violation or potential violation of law or regulation.

UNITED STATES PATENT AND TRADEMARK OFFICE

Commissioner for Patents
United States Patent and Trademark Office
P.O. Box 1450
Alexandria, VA 22313-1450
www.uspto.gov

In re Patent No. 5912784
Issue Date: June 15,1999
Application No. 08972881
Filed: November 18,1997
Attorney Docket No. SEAG1007.005

:
:DECISION GRANTING PETITION
:UNDER 37 CFR 1.378(c)
:

This is a decision on the electronic petition, filed March 5,2008 ,under 37 CFR 1.378(c) to accept the unintentionally delayed payment of the 7.5 year maintenance fee for the above-identified patent.

The petition is GRANTED.

The maintenance fee is accepted, and the above-identified patent reinstated as of March 5,2008 . This decision also constitutes notice that the fee has been accepted. An electronic copy of the petition and this decision has been created as an entry in an Image File Wrapper. Nevertheless, petitioner should print and retain an independent copy

Telephone inquires related to this electronic decision should be directed to the Electronic Business Center at 1-866-217-9197.

UNITED STATES PATENT AND TRADEMARK OFFICE

COMMISSIONER FOR PATENTS
UNITED STATES PATENT AND TRADEMARK OFFICE
WASHINGTON, D.C. 20231
www.uspto.gov

Paper No. 25

JOHN P DELUCA
WATSON COLE GRINDLE WATSON
1400 K STREET NW
SUITE 1000
WASHINGTON , DC 20005-2477

COPY MAILED

AUG 1 4 2001

OFFICE OF PETITIONS

In re Application of
Leijon et al.
Application No. 08/973,017
Filed: March 25, 1998
Attorney Docket No. 70557-2/8239

ON PETITION

This is a decision on the petition under 37 CFR 1.137(b), filed July 23, 2001, to revive the above-identified application.

The petition is **GRANTED**.

The above-identified application became abandoned for failure to timely file a proper response to the non-final Office action of December 29, 2000, which set a shortened statutory period for reply of three (3) months. No extensions of time under the provisions of 37 CFR 1.136(a) were obtained. Accordingly, the above-identified application became abandoned on March 30, 2001.

With the instant petition, the petitioner has met the requirements to revive the above-identified application, pursuant to 37 CFR 1.137(b). Petitioner submitted the required reply in the form of the filing of an amendment, has paid the petition fee, and has made the proper statement of unintentional delay.

The application does not indicate a change of address has been filed in the case, although the address given on the petition differs from the address of record. If petitioner desires to receive future correspondence regarding this application, the appropriate change of correspondence address must be submitted. While a courtesy copy of this decision is being mailed to the address indicated on the present petition, all future correspondence will be directed to the address currently of record until such time as appropriate instructions are received to the contrary.

Receipt of the Information Disclosure Statement and Drawings is acknowledged.

The application file is being forwarded to Technology Center 2800 for further processing.

Telephone inquiries concerning this decision should be directed to Petitions Attorney Paul Shanoski at (703) 305-0011.

Beverly M. Flanagan
Supervisory Petitions Examiner
Office of Petitions
Office of the Deputy Commissioner
for Patent Examination Policy

cc: John P. DeLuca
Dykema Gossett PLLC
Third Floor West, Franklin Square
1300 I Street, NW
Washington, DC 20005-3306

UNITED STATES PATENT AND TRADEMARK OFFICE

COMMISSIONER FOR PATENTS
UNITED STATES PATENT AND TRADEMARK OFFICE
WASHINGTON, D.C. 20231
www.uspto.gov

Paper No. 34

John P. De Luca
DYKEMA GOSSETT PLLC
1300 I Street N.W.
Washington, D.C. 20005

SEP 11 2002

In re Application of	:	
LEIJON et al.	:	DECISION
Application No. 08/973,017	:	ON PETITION
Filed: November 13, 1998	:	
Attorney Docket No. 66291-179-2	:	

This is a decision on the petition, filed August 08, 2002 requesting that the prosecution in the above-identified patent application be suspended for a period of six months under 37 C.F.R. § 1.103(a), and an additional six months, pursuant to MPEP § 1002.02(c)9, for a total of twelve months, beginning with the filing of the subject Petition.

Regarding a suspension on request of the applicant, 37 CFR 1.103(a) provides:

> (a) Suspension for cause. On request of the applicant, the Office may grant a suspension of action by the Office under this paragraph for good and sufficient cause. The Office will not suspend action if a reply by applicant to an Office action is outstanding. Any petition for suspension of action under this paragraph must specify a period of suspension not exceeding six months. Any petition for suspension of action under this paragraph must also include:
> (1) A showing of good and sufficient cause for suspension of action; and
> (2) The fee set forth in § 1.17(h), unless such cause is the fault of the Office

In the Request, to establish cause, Petitioner asserts the claims and issues of the instant application are relevant to the claims and issues in at least U.S. Application No. 08/973,019 which Petitioner has appealed. Further, because the appeal of '019 will materially affect the prosecution of the instant application, the instant application should be suspended pending the decision on appeal of '019.

A review of the record indicates the instant application has claims and issues that are relevant to appealed case '019 . The claims in the instant application and appealed case '019 are both directed toward the particular structure of the high voltage cable. Consequently, since the

outcome of appealed case '019 will materially affect prosecution of the instant application, good and sufficient reasons have been demonstrated to warrant suspension of action.

Accordingly, the petition to suspend prosecution is GRANTED for a period of up to twelve (12) months starting from the filing of petition, August 08, 2002.

Inquiries regarding this decision should be directed to Richard Seidel at (703) 306-3431.

Richard Seidel, Director
Technology Center 2800
Semiconductors, Electrical and Optical
Systems and Components

UNITED STATES PATENT AND TRADEMARK OFFICE

COMMISSIONER FOR PATENTS
UNITED STATES PATENT AND TRADEMARK OFFICE
WASHINGTON, D.C. 20231
www.uspto.gov

Paper No. 30

John P. De Luca
DYKEMA GOSSETT PLLC
1300 I Street N.W.
Washington, D.C. 20005

AUG - 1 2002

In re Application of	:	
LEIJON et al.	:	DECISION
Application No. 08/973,018	:	ON PETITION
Filed: March 25, 1998	:	
Attorney Docket No. 66291-143-2	:	

This is a decision on the petition, filed March 14, 2002 requesting that the prosecution in the above-identified patent application be suspended for a period of six months under 37 C.F.R. § 1.103(a), and an additional six months, pursuant to MPEP § 1002.02(c)9, for a total of twelve months, beginning with the filing of the subject Petition.

Regarding a suspension on request of the applicant, 37 CFR 1.103(a) provides:

> (a) Suspension for cause. On request of the applicant, the Office may grant a suspension of action by the Office under this paragraph for good and sufficient cause. The Office will not suspend action if a reply by applicant to an Office action is outstanding. Any petition for suspension of action under this paragraph must specify a period of suspension not exceeding six months. Any petition for suspension of action under this paragraph must also include:
> (1) A showing of good and sufficient cause for suspension of action; and
> (2) The fee set forth in § 1.17(h), unless such cause is the fault of the Office

In the Request, to establish cause, Petitioner asserts the claims and issues of the instant application are relevant to the claims and issues in at least U.S. Application No. 08/973,019 which Petitioner has appealed. Further, because the appeal of '019 will materially affect the prosecution of the instant application, the instant application should be suspended pending the decision on appeal of '019.

A review of the record indicates the instant application has claims and issues that are relevant to appealed case '019 . The claims in the instant application and appealed case '019 are both directed toward the particular structure of the high voltage cable. Consequently, since the

outcome of appealed case '019 will materially affect prosecution of the instant application, good and sufficient reasons have been demonstrated to warrant suspension of action.

Accordingly, the petition to suspend prosecution is GRANTED for a period of up to twelve (12) months starting from the filing of petition, March 14, 2002.

Inquiries regarding this decision should be directed to Richard Seidel at (703) 306-3431.

Richard Seidel, Director
Technology Center 2800
Semiconductors, Electrical and Optical
Systems and Components

UNITED STATES PATENT AND TRADEMARK OFFICE

COMMISSIONER FOR PATENTS
UNITED STATES PATENT AND TRADEMARK OFFICE
WASHINGTON, D.C. 20231
www.uspto.gov

Paper No. 32

John P. De Luca
DYKEMA GOSSETT PLLC
1300 I Street N.W.
Washington, D.C. 20005

MAY 13 2003

In re Application of	:	
LEIJON et al.	:	DECISION
Application No. 08/973,018	:	ON PETITION
Filed: March 25, 1998	:	
Attorney Docket No. 66291-143-2	:	

This is a decision on the petition, filed March 21, 2003, requesting that the prosecution in the above-identified patent application be suspended for an additional six months beyond the 12 months that prosecution was suspended under 37 C.F.R. § 1.103(a).

Regarding a suspension on request of the applicant, 37 CFR 1.103(a) provides:

> (a) Suspension for cause. On request of the applicant, the Office may grant a suspension of action by the Office under this paragraph for good and sufficient cause. The Office will not suspend action if a reply by applicant to an Office action is outstanding. Any petition for suspension of action under this paragraph must specify a period of suspension not exceeding six months. Any petition for suspension of action under this paragraph must also include:
> (1) A showing of good and sufficient cause for suspension of action; and
> (2) The fee set forth in § 1.17(h), unless such cause is the fault of the Office

In the Request, to establish cause, Petitioner asserts the claims and issues of the instant application are relevant to the claims and issues in at least U.S. Application No. 08/973,019 which Petitioner has appealed. Further, because the appeal of '019 will materially affect the prosecution of the instant application, the instant application should be suspended pending the decision on appeal of '019.

A review of the record indicates the instant application has claims and issues that are relevant to appealed case '019 . The claims in the instant application and appealed case '019 are both directed toward the particular structure of the high voltage cable. Consequently, since the

outcome of appealed case '019 will materially affect prosecution of the instant application, good and sufficient reasons have been demonstrated to warrant suspension of action.

Accordingly, the petition to suspend prosecution is GRANTED for a period of up to six (6) months starting from the filing of petition, March 21, 2003.

Inquiries regarding this decision should be directed to Elvin Enad at (703) 308-7619.

Richard Seidel, Director
Technology Center 2800
Semiconductors, Electrical and Optical
Systems and Components

PTO/SB/66 (03-09)
Approved for use through 03/31/2012. OMB 0651-0016
U.S. Patent and Trademark Office: U.S. DEPARTMENT OF COMMERCE
Under the Paperwork Reduction Act of 1995, no persons are required to respond to a collection of information unless it displays valid OMB control number.

PETITION TO ACCEPT UNINTENTIONALLY DELAYED PAYMENT OF MAINTENANCE FEE IN AN EXPIRED PATENT (37 CFR 1.378(c))

Patent Number	Issue Date (YYYY-MM-DD)	Application Number	Filing Date (YYYY-MM-DD)	Docket Number (if applicable)
6117319	2000-09-12	08973125	1997-12-31	

CAUTION: Maintenance fee (and surcharge, if any) payment must correctly identify: (1) the patent number and (2) the application number of the actual U.S. application leading to issuance of that patent to ensure the fee(s) is/are associated with the correct patent. 37 CFR 1.366(c) and (d).

SMALL ENTITY
☒ Patentee claims, or has previously claimed, small entity status. See 37 CFR 1.27.

LOSS OF ENTITLEMENT TO SMALL ENTITY STATUS
☐ Patentee is no longer entitled to small entity status. See 37 CFR 1.27(g)

NOT Small Entity		Small Entity	
Fee	Code	Fee	Code
○ 3 ½ year	(1551)	○ 3 ½ year	(2551)
○ 7 ½ year	(1552)	◉ 7 ½ year	(2552)
○ 11 ½ year	(1553)	○ 11 ½ year	(2553)

SURCHARGE
The surcharge required by 37 CFR 1.20(i)(2) (Fee Code 1558) must be paid as a condition of accepting unintentionally delayed payment of the maintenance fee.

MAINTENANCE FEE (37 CFR 1.20(e)-(g))
The appropriate maintenance fee must be submitted with this petition.

STATEMENT
THE UNDERSIGNED CERTIFIES THAT THE DELAY IN PAYMENT OF THE MAINTENANCE FEE TO THIS PATENT WAS UNINTENTIONAL

PETITIONER(S) REQUEST THAT THE DELAYED PAYMENT OF THE MAINTENANCE FEE BE ACCEPTED AND THE PATENT REINSTATED

THIS PORTION MUST BE COMPLETED BY THE SIGNATORY OR SIGNATORIES

37 CFR 1.378(d) states: "Any petition under this section must be signed by an attorney or agent registered to practice before the Patent and Trademark Office, or by the patentee, the assignee, or other party in interest."

I certify, in accordance with 37 CFR 1.4(d)(4) that I am

○ An attorney or agent registered to practice before the Patent and Trademark Office

◉ A sole patentee

○ A joint patentee; I certify that I am authorized to sign this submission on behalf of all the other patentees.

○ A joint patentee; all of whom are signing this e-petition

○ The assignee of record of the entire interest

Sole Patentee			
A signature of the applicant or representative is required in accordance with 37 CFR 1.33 and 10.18. Please see 37 CFR 1.4(d) for the form of the signature.			
Signature	/christopher cranshaw/	Date (YYYY-MM-DD)	2009-09-24
Name	christopher cranshaw		

This collection of information is required by 37 CFR 1.378(c). The information is required to obtain or retain a benefit by the public which is to file (and by the USPTO to process) an application. Confidentiality is governed by 35 U.S.C. 122 and 37 CFR 1.11 and 1.14. This collection is estimated to take 1 hour to complete, including gathering, preparing, and submitting the completed application form to the USPTO. Time will vary depending upon the individual case. Any comments on the amount of time you require to complete this form and/or suggestions for reducing this burden, should be sent to the Chief Information Officer, U.S. Patent and Trademark Office, U.S. Department of Commerce, P.O. Box 1450, Alexandria, VA 22313-1450. DO NOT SEND FEES OR COMPLETED FORMS TO THIS ADDRESS. **This form can only be used when in conjunction with EFS-Web. If this form is mailed to the USPTO, it may cause delays in reinstating the patent.**

Privacy Act Statement

The Privacy Act of 1974 (P.L. 93-579) requires that you be given certain information in connection with your submission of the attached form related to a patent application or patent. Accordingly, pursuant to the requirements of the Act, please be advised that: (1) the general authority for the collection of this information is 35 U.S.C. 2(b)(2); (2) furnishing of the information solicited is voluntary; and (3) the principal purpose for which the information is used by the U.S. Patent and Trademark Office is to process and/or examine your submission related to a patent application or patent. If you do not furnish the requested information, the U.S. Patent and Trademark Office may not be able to process and/or examine your submission, which may result in termination of proceedings or abandonment of the application or expiration of the patent.

The information provided by you in this form will be subject to the following routine uses:

1. The information on this form will be treated confidentially to the extent allowed under the Freedom of Information Act (5 U.S.C. 552) and the Privacy Act (5 U.S.C. 552a). Records from this system of records may be disclosed to the Department of Justice to determine whether the Freedom of Information Act requires disclosure of these records.

2. A record from this system of records may be disclosed, as a routine use, in the course of presenting evidence to a court, magistrate, or administrative tribunal, including disclosures to opposing counsel in the course of settlement negotiations.

3. A record in this system of records may be disclosed, as a routine use, to a Member of Congress submitting a request involving an individual, to whom the record pertains, when the individual has requested assistance from the Member with respect to the subject matter of the record.

4. A record in this system of records may be disclosed, as a routine use, to a contractor of the Agency having need for the information in order to perform a contract. Recipients of information shall be required to comply with the requirements of the Privacy Act of 1974, as amended, pursuant to 5 U.S.C. 552a(m).

5. A record related to an International Application filed under the Patent Cooperation Treaty in this system of records may be disclosed, as a routine use, to the International Bureau of the World Intellectual Property Organization, pursuant to the Patent Cooperation Treaty.

6. A record in this system of records may be disclosed, as a routine use, to another federal agency for purposes of National Security review (35 U.S.C. 181) and for review pursuant to the Atomic Energy Act (42 U.S.C. 218(c)).

7. A record from this system of records may be disclosed, as a routine use, to the Administrator, General Services, or his/her designee, during an inspection of records conducted by GSA as part of that agency's responsibility to recommend improvements in records management practices and programs, under authority of 44 U.S.C. 2904 and 2906. Such disclosure shall be made in accordance with the GSA regulations governing inspection of records for this purpose, and any other relevant (i.e., GSA or Commerce) directive. Such disclosure shall not be used to make determinations about individuals.

8. A record from this system of records may be disclosed, as a routine use, to the public after either publication of the application pursuant to 35 U.S.C. 122(b) or issuance of a patent pursuant to 35 U.S.C. 151. Further, a record may be disclosed, subject to the limitations of 37 CFR 1.14, as a routine use, to the public if the record was filed in an application which became abandoned or in which the proceedings were terminated and which application is referenced by either a published application, an application open to public inspections or an issued patent.

9. A record from this system of records may be disclosed, as a routine use, to a Federal, State, or local law enforcement agency, if the USPTO becomes aware of a violation or potential violation of law or regulation.

UNITED STATES PATENT AND TRADEMARK OFFICE

Commissioner for Patents
United States Patent and Trademark Office
P.O. Box 1450
Alexandria, VA 22313-1450
www.uspto.gov

In re Patent No. 6117319
Issue Date: September 12,2000
Application No. 08973125
Filed: December 31,1997
Attorney Docket No. 6651-PA11

:
:DECISION GRANTING PETITION
:UNDER 37 CFR 1.378(c)
:

This is a decision on the electronic petition, filed September 24,2009 ,under 37 CFR 1.378(c) to accept the unintentionally delayed payment of the 7.5 year maintenance fee for the above-identified patent.

The petition is **GRANTED**.

The maintenance fee is accepted, and the above-identified patent reinstated as of September 24,2009 . This decision also constitutes notice that the fee has been accepted. An electronic copy of the petition and this decision has been created as an entry in the Image File Wrapper. Nevertheless, petitioner should print and retain an independent copy.

Telephone inquiries related to this electronic decision should be directed to the Electronic Business Center at 1-866-217-9197.

UNITED STATES PATENT AND TRADEMARK OFFICE

Commissioner for Patents
United States Patent and Trademark Office
Washington, D.C. 20231
www.uspto.gov

Paper No. 26

Dykema Gossett PLLC
Franklin Square, Third Floor West
1300 I Street, N. W.
Washington, DC 20005

COPY MAILED

MAY 1 0 2002

OFFICE OF PETITIONS

In re Application of :
Mats Leijon :
Application No. 08/973,210 : ON PETITION
Filed: April 3, 1998 :
Attorney Docket No. 66291-182-2 :

This is a decision on the petition under 37 CFR 1.137(b), filed March 25, 2002, to revive the above-identified application.

The petition is **GRANTED**.

The two-month period for filing an appeal brief in triplicate (accompanied by the fee required by 37 CFR 1.17(c)), runs from the date of this decision.

Telephone inquiries concerning this decision should be directed to the undersigned at (703) 306-3475.

The application file is being forwarded to Technology Center Art Unit 2832.

Marianne E. Morgan
Petitions Examiner
Office of Petitions
Office of the Deputy Commissioner
for Patent Examination Policy

UNITED STATES PATENT AND TRADEMARK OFFICE

COMMISSIONER FOR PATENTS
UNITED STATES PATENT AND TRADEMARK OFFICE
WASHINGTON, D.C. 20231
www.uspto.gov

Paper No. 31

John P. De Luca
DYKEMA GOSSETT PLLC
1300 I Street N.W.
Washington, D.C. 20005

JUL 11 2003

In re Application of	:	
LEIJON et al.	:	DECISION
Application No. 08/973,210	:	ON PETITION
Filed: November 28, 1997	:	
Attorney Docket No. 66291-182-2	:	

This is a decision on the petition, filed September 02, 2002, requesting that the prosecution in the above-identified patent application be suspended for a period of six months under 37 C.F.R. § 1.103(a), and an additional six months, pursuant to MPEP § 1002.02(c)9, for a total of twelve months, beginning with the filing of the subject Petition.

Regarding a suspension on request of the applicant, 37 CFR 1.103(a) provides:

> (a) Suspension for cause. On request of the applicant, the Office may grant a suspension of action by the Office under this paragraph for good and sufficient cause. The Office will not suspend action if a reply by applicant to an Office action is outstanding. Any petition for suspension of action under this paragraph must specify a period of suspension not exceeding six months. Any petition for suspension of action under this paragraph must also include:
> (1) A showing of good and sufficient cause for suspension of action; and
> (2) The fee set forth in § 1.17(h), unless such cause is the fault of the Office

In the Request, to establish cause, Petitioner asserts the claims and issues of the instant application are relevant to the claims and issues in at least U.S. Application No. 08/973,019 which Petitioner has appealed. Further, because the appeal of '019 will materially affect the prosecution of the instant application, the instant application should be suspended pending the decision on appeal of '019.

A review of the record indicates the instant application has claims and issues that are relevant to appealed case '019 . The claims in the instant application and appealed case '019 are both directed toward the particular structure of the high voltage cable. Consequently, since the

outcome of appealed case '019 will materially affect prosecution of the instant application, good and sufficient reasons have been demonstrated to warrant suspension of action.

Accordingly, the petition to suspend prosecution is GRANTED for a period of up to twelve (12) months starting from the filing of petition, September 02, 2002.

Inquiries regarding this decision should be directed to Richard Seidel at (703) 306-3431.

Richard Seidel, Director
Technology Center 2800
Semiconductors, Electrical and Optical
Systems and Components

UNITED STATES PATENT AND TRADEMARK OFFICE

COMMISSIONER FOR PATENTS
UNITED STATES PATENT AND TRADEMARK OFFICE
WASHINGTON, D.C. 20231
www.uspto.gov

Paper No. 25

John P. De Luca
DYKEMA GOSSETT PLLC
1300 I Street N.W.
Washington, D.C. 20005

APR 11 2002

In re Application of
LEIJON et al.
Application No. 08/973,305
Filed: April 09, 1998
Attorney Docket No. 66291-160-2

DECISION
ON PETITION

This is a decision on the petition, filed March 14, 2002 requesting that the prosecution in the above-identified patent application be suspended for a period of six months under 37 C.F.R. § 1.103(a). Petitioner also requests a second suspension of time for an additional six months, pursuant to MPEP § 1002.02(c)9, for a total of twelve months, beginning with the filing of the subject Petition.

Regarding a suspension on request of the applicant, 37 CFR 1.103(a) provides:

> (a) Suspension for cause. On request of the applicant, the Office may grant a suspension of action by the Office under this paragraph for good and sufficient cause. *The Office will not suspend action if a reply by applicant to an Office action is outstanding.*

A review of the record indicates that an Office Action was mailed on March 12, 2002 To date, no reply to the outstanding Office Action has been received. Accordingly, Petitioner's request for suspension of action in this application under 37 CFR1.103(a) is denied as being improper. The period for response to the outstanding Office Action continues to run three (3) months from the March 12, 2002 mail date.

The petition is **DENIED**.

Inquiries regarding this decision should be directed to Richard Seidel at (703) 306-3431.

Richard Seidel, Director
Technology Center 2800
Semiconductors, Electrical and Optical
Systems and Components

UNITED STATES PATENT AND TRADEMARK OFFICE

COMMISSIONER FOR PATENTS
UNITED STATES PATENT AND TRADEMARK OFFICE
WASHINGTON, D.C. 20231
www.uspto.gov

Paper No. 32

John P. De Luca
DYKEMA GOSSETT PLLC
1300 I Street N.W.
Washington, D.C. 20005

NOV 22 2002

In re Application of	:	
LEIJON et al.	:	DECISION
Application No. 08/973,305	:	ON PETITION
Filed: April 09, 1998	:	
Attorney Docket No. 66291-160	:	

This is a decision on the petition, filed September 23, 2002 requesting that the prosecution in the above-identified patent application be suspended for a period of six months under 37 C.F.R. § 1.103(a), and an additional six months, pursuant to MPEP § 1002.02(c)9, for a total of twelve months, beginning with the filing of the subject Petition.

Regarding a suspension on request of the applicant, 37 CFR 1.103(a) provides:

> (a) Suspension for cause. On request of the applicant, the Office may grant a suspension of action by the Office under this paragraph for good and sufficient cause. The Office will not suspend action if a reply by applicant to an Office action is outstanding. Any petition for suspension of action under this paragraph must specify a period of suspension not exceeding six months. Any petition for suspension of action under this paragraph must also include:
> (1) A showing of good and sufficient cause for suspension of action; and
> (2) The fee set forth in § 1.17(h), unless such cause is the fault of the Office

In the Request, to establish cause, Petitioner asserts the claims and issues of the instant application are relevant to the claims and issues in at least U.S. Application No. 08/973,019 which Petitioner has appealed. Further, because the appeal of '019 will materially affect the prosecution of the instant application, the instant application should be suspended pending the decision on appeal of '019.

A review of the record indicates the instant application has claims and issues that are relevant to appealed case '019 . The claims in the instant application and appealed case '019 are both directed toward the particular structure of the high voltage cable. Consequently, since the

outcome of appealed case '019 will materially affect prosecution of the instant application, good and sufficient reasons have been demonstrated to warrant suspension of action.

Accordingly, the petition to suspend prosecution is GRANTED for a period of up to twelve (12) months starting from the filing of petition, September 23, 2002.

Inquiries regarding this decision should be directed to Richard Seidel at (703) 306-3431.

Richard Seidel, Director
Technology Center 2800
Semiconductors, Electrical and Optical
Systems and Components

UNITED STATES PATENT AND TRADEMARK OFFICE

COMMISSIONER FOR PATENTS
UNITED STATES PATENT AND TRADEMARK OFFICE
WASHINGTON, D.C. 20231
www.uspto.gov

Paper No. 32

John P. De Luca
DYKEMA GOSSETT PLLC
1300 I Street N.W.
Washington, D.C. 20005

AUG - 5 2002

In re Application of	:	
LEIJON et al.	:	DECISION
Application No. 08/973,306	:	ON PETITION
Filed: April 10, 1998	:	
Attorney Docket No. 66291-155	:	

This is a decision on the petition, filed July 08, 2002 requesting that the prosecution in the above-identified patent application be suspended for a period of six months under 37 C.F.R. § 1.103(a), and an additional six months, pursuant to MPEP § 1002.02(c)9, for a total of twelve months, beginning with the filing of the subject Petition.

Regarding a suspension on request of the applicant, 37 CFR 1.103(a) provides:

> (a) Suspension for cause. On request of the applicant, the Office may grant a suspension of action by the Office under this paragraph for good and sufficient cause. The Office will not suspend action if a reply by applicant to an Office action is outstanding. Any petition for suspension of action under this paragraph must specify a period of suspension not exceeding six months. Any petition for suspension of action under this paragraph must also include:
> (1) A showing of good and sufficient cause for suspension of action; and
> (2) The fee set forth in § 1.17(h), unless such cause is the fault of the Office

In the Request, to establish cause, Petitioner asserts the claims and issues of the instant application are relevant to the claims and issues in at least U.S. Application No. 08/973,019 which Petitioner has appealed. Further, because the appeal of '019 will materially affect the prosecution of the instant application, the instant application should be suspended pending the decision on appeal of '019.

A review of the record indicates the instant application has claims and issues that are relevant to appealed case '019 . The claims in the instant application and appealed case '019 are both directed toward the particular structure of the high voltage cable. Consequently, since the

outcome of appealed case '019 will materially affect prosecution of the instant application, good and sufficient reasons have been demonstrated to warrant suspension of action.

Accordingly, the petition to suspend prosecution is GRANTED for a period of up to twelve (12) months starting from the filing of petition, July 08, 2002.

Inquiries regarding this decision should be directed to Richard Seidel at (703) 306-3431.

Richard Seidel, Director
Technology Center 2800
Semiconductors, Electrical and Optical
Systems and Components

UNITED STATES PATENT AND TRADEMARK OFFICE

Commissioner for Patents
United States Patent and Trademark Office
P.O. Box 1450
Alexandria, VA 22313-1450
www.uspto.gov

DYKEMA GOSSETT PLLC
FRANKLIN SQUARE
THIRD FLOOR WEST
1300 I ST NW
WASHINGTON DC 20005

COPY MAILED

APR 07 2005

OFFICE OF PETITIONS

In re Application of	
Leijon, et al.	: DECISION ON APPLICATION
Application No. 08/973,306	: FOR PATENT TERM ADJUSTMENT
Filed: April 10, 1998	:
Attorney Docket No. 66291-155	:

This decision is in response to the "TRANSMITTAL LETTER PATENT TERM ADJUSTMENT," filed September 29, 2004, notifying the Office of an error in Applicant's favor in the initial determination of patent term adjustment under 35 U.S.C. § 154(b).

The request for correction of the initial determination of patent term adjustment (PTA) is **GRANTED**.

The Office has updated the PAIR screen to reflect that the correct Patent Term Adjustment determination at the time of the mailing of the Notice of Allowance was **three hundred four (304)** days. A copy of the updated PAIR screen, showing the correct determination, is enclosed.

As a Continued Prosecution Application (CPA) was filed in the instant application on May 8, 2001, the application is entitled to the benefits of the patent term adjustment provisions of 35 U.S.C. §154(b) and 37 C.F.R. §§1.702 through 1.705.[1]

On September 20, 2004, the Office mailed the Determination of Patent Term Adjustment under 35 U.S.C. 154(b) in the above-identified application. The Notice stated that the patent term adjustment to date is six hundred sixty-nine (669) days.

---

[1] See MPEP 2730.

The Office initially determined a patent term adjustment of six hundred sixty-nine (669) days based on an adjustment for PTO delay of seven hundred seventeen (717) and thirty-eight (38) days, both pursuant to 35 U.S.C. 154(b)(1)(A)(ii) and 37 C.F.R. § 1.703(a)(2), reduced by applicants' delay of eighty-six (86) days pursuant to 35 U.S.C. 154(b)(2)(C)(i) and 37 C.F.R. § 1.704(b). The adjustments of 717, 38, and 86 days have been reviewed and found to be correct. Applicants state that they should have been assessed additional delay for the period of time the application was under suspension.

Applicants filed a petition for suspension of action under 37 C.F.R. § 1.103 on July 8, 2002. The petition was granted in a decision mailed on August 5, 2002. The decision stated that prosecution would be suspended for a period of twelve (12) months from the filing of the petition.

Accordingly, pursuant to 37 C.F.R. § 1.704(c)(1), applicants should have incurred additional delay of three hundred sixty-five (365) days.

In view thereof, the correct determination of PTA at the time of the mailing of the Notice of Allowance is **three hundred four (304)** days (755 (717 + 38) days of PTO delay, reduced by 451 (365 + 86) days of Applicant delay).

No petition fee was required. The Office thanks Applicants for their good faith and candor in bringing this matter to the attention of the Office.

The application file is being forwarded to the Office of Patent Publication for issuance of the patent.

Telephone inquiries specific to this letter should be directed to Cliff Congo, Petitions Attorney, at (571)272-3207.

Karin Ferriter
Senior Legal Advisor
Office of Patent Legal Administration
Office of Deputy Commissioner
for Patent Examination Policy

Enclosure: Copy of adjusted PAIR calculation

03 FEB 2000

UNITED STATES DEPARTMENT OF COMMERCE
Patent and Trademark Office

United States Receiving Office
United States International Searching Authority
United States International Preliminary Examining Authority
United States Designated Office
United States Elected Office

Address: Assistant Commissioner for Patents
Box PCT
Washington, D.C. 20231

#9

Francis J. Hone
Baker and Botts, L.L.P.
30 Rockefeller Plaza
New York, NY 10112

In re Application of
Shinji KAMEI
Serial No.: 08/973,564
PCT No.: PCT/JP96/01622
Int. Filing Date: 07 May 1996
Priority Date: 16 June 1995
Attorney's Docket No.: 31425PCT/USA
For: SEMICONDUCTOR DEVICE, IC CARD UTILIZING THE SAME AND COMMUNICATION SYSTEM

DECISION ON

PETITION

UNDER 37 C.F.R. §1.47(b)

This decision is in response to applicants' "RENEWED PETITION UNDER 37 C.F.R. 1.47(b)," filed on 15 March 1999, requesting acceptance of the above-captioned United States of America national stage application without the signature of the sole inventor, Shinji KAMEI. No additional petition fee is required for the renewed petition under 37 CFR 1.47(b).

BACKGROUND

On 22 December 1998, the Office dismissed applicants' petition filed 11 December 1998, on the grounds that the papers filed on 03 March 1998 do not clearly establish that Mr. KAMEI assigned the instant application to Rohm Co., Ltd. Specifically, it was not clear that either of the assignments submitted by petition is directed to the instant application.

On 15 March 1999, applicant submitted the instant petition requesting acceptance of the above-captioned United States of America national stage application without the signature of the sole inventor. The renewed petition under 37 CFR 1.47(b) includes a second supplemental Declaration from Harou Hagimori which establishes that the Assignments submitted with the original Petition relate to the Japanese applications upon which the present application is based and includes the subject matter of the present application. As described in Mr. Hagimori's Declaration, the Assignment documents submitted with the original petition relate to two invention disclosures having Company Receipt Numbers 95-00287 and 95-00749. When the Japanese patent applications for those inventions were prepared and filed, the Japanese attorney provided a more comprehensive title for each of the inventions. When the PCT application based on both Japanese applications was prepared and filed, the titles for the priority applications were combined to form the PCT title which is the same as that used in the

United States application.

DISCUSSION

The evidence of record is sufficient to establish that Mr. KAMEI assigned the instant application to Rohm Co., Ltd. Accordingly, acceptance of the application under 37 CFR 1.47(b) is appropriate.

DECISION

For the reasons discussed above, the renewed petition for status under 37 CFR 1.47(b) is GRANTED.

The United States Designated/Elected Office (US/DO/EO) is authorized to accept the application as a 37 C.F.R. §1.47(b) application and to mail a Filing Receipt. The application will be given an international filing date of 07 May 1996 under 35 U.S.C. §363, and a date of **03 March 1998** under 35 U.S.C. §371(c) and §102(e).

As provided in 37 C.F.R. §1.47(b), a notice of the filing of this application will be forwarded to the non-signing inventor at his last known addresses of record.

The application is being returned to the United States Designated/Elected Office for mailing a Notification of Acceptance of Application (Form PCT/DO/EO/903) identifying a 35 U.S.C. §371 and §102(e) date of **03 March 1998**.

Lissi Mojica
PCT Legal Examiner
PCT Legal Office

Conferee: Leonard Smith
PCT Legal Examiner
PCT Legal Office

Telephone: 703-308-2260
Facsimile: 703-308-6459

03 FEB 2000

UNITED STATES DEPARTMENT OF COMMERCE
Patent and Trademark Office

Patent Cooperation Treaty
Legal Office

Address: Assistant Commissioner for Patents
Box PCT
Washington, D.C. 20231

Shinji Kamei
3-27 Ohe 2-Chome, Otsu-shi
Shiga, Japan 520-21

In re Application of
Shinji KAMEI
Application No.: 08/973,564
PCT No.: PCT/JP96/01622
Int. Filing Date: 13 June 1996
Priority Date: 16 June 1995
For: SEMICONDUCTOR DEVICE, IC CARD UTILIZING SAME AND COMMUNICATION SYSTEM

Dear Mr. KAMEI:

You are named as an inventor in the above identified United States patent application, filed under the provisions of 37 CFR 1.47(b) and 35 U.S.C. 118. Should a patent be granted, you will be designated as an inventor.

As a named inventor, you are entitled to inspect any paper in the file wrapper of the application, order copies of all or any part thereof (at a prepaid cost per 37 CFR 1.19) or to make your position of record in the application. Alternatively, you may arrange to do any of the preceding through a registered patent agent or attorney presenting written authorization from you. If you care to join in the application, counsel of record (see below) would presumably assist you. Joining in the application would entail the filing of an appropriate oath or declaration by you pursuant to 37 CFR 1.63.

Lissi Mojica
PCT Legal Examiner
PCT Legal Office

Conferee: Richard Cole
PCT Legal Examiner
PCT Legal Office

Telephone: 703-308-2260
Facsimile: 703-308-6459

Counsel Of Record: Francis J. Hone
Baker & Botts, L.L.P.
30 Rockefeller Plaza
New York, NY 10112

SPE RESPONSE FOR CERTIFICATE OF CORRECTION

Paper No.: X

DATE : **January 11,2008**

TO SPE OF : ART UNIT **2876**

SUBJECT : Request for Certificate of Correction for Appl. No.: **08/973,564** Patent No.: **6223990 B1**

A response is requested with respect to a request for a certificate of correction.

With respect to the change(s) requested to correct Office and/or Applicant's errors, should the patent read as shown in the certificate of correction attached herewith or the COCIN document(s), in IFW images for the above-identified patented application? No new matter should be introduced, nor should the scope or meaning of the claims be changed.

If the response is for an IFW, within **7** days, please complete and forward the response, to the employee (named below) via scanning into application images, using document code **COCX**.

DO NOT SENT TO ATTORNEY

If the response is for a paper file wrapper, please complete the response and forward the response with the paper file wrapper, to the employee (named below), within **7** days, to:

Certificates of Correction Branch (CofC)
South Tower - 9A22
Palm Location 7580

You can fax the Directors/SPE response to 571-270-9990

LAMONTE NEWSOME

Certificates of Correction Branch

703-308-9390 ext. 112

Thank You For Your Assistance

The request for issuing the above-identified correction(s) is hereby:

Note your decision on the appropriate box.

- ☑ **Approved** — **All** changes apply.
- ☐ **Approved in Part** — Specify below which changes **do not** apply.
- ☐ **Denied** — State the reasons for denial below.

Comments: Okay to enter the Certificate of Correction filed 12/14/2001, which does not change the scope of or meaning of the claims.

2876

SPE RESPONSE FOR CERTIFICATE OF CORRECTION

SPE **Art Unit**

OIPE JC54
DEC 07 2001
PATENT & TRADEMARK OFFICE

C9 c/A
RTC

A31425 PCT/USA
PATENT

IN THE UNITED STATES PATENT AND TRADEMARK OFFICE

Patentee: Shinji Kamei

Patent No.: 6,223,990 Issued: May 1, 2001

Serial No.: 08/973,564 Filed: March 3, 1998

For: COMMUNICATION SYSTEM INCLUDING A DUAL PASSIVE ANTENNA CONFIGURATION

REQUEST FOR CERTIFICATE OF
CORRECTION UNDER 37 C.F.R. §1.322 and §1.323

I hereby certify that this paper is being deposited with the United States Postal Service as first class mail in an envelope addressed to: Assistant Commissioner for Patents, Washington, D.C. 20231, on:

CERTIFICATE
DEC 14 2001
OF CORRECTION

October 30, 2001
Date of Deposit

Francis J. Hone
Attorney Name

18,662
PTO Reg. No.

Signature

October 30, 2001
Date of Signature

Assistant Commissioner for Patents
Washington, D.C. 20231

Sir:

Upon comparison of the printed text of the above-identified patent issued on Application No. 08/973,564 filed March 3, 1998 with our file of the application therefor, the following errors were found:

In the Specification

Column 1, line 18, "rifts," should read –lifts,--, per Specification, page 1, line 17.

12/11/2001 BNGUYEN2 00000100 6223990
01 FC:145 100.00 OP

UNITED STATES PATENT AND TRADEMARK OFFICE

CERTIFICATE OF CORRECTION

PATENT NO. : 6,223,990

DATED : May 1, 2001

INVENTOR(S) : Shinji Kamei

It is certified that errors appear in the above-identified patent and that said Letters Patent is hereby corrected as shown below:

In the Specification

Column 1, line 18, "rifts," should read --lifts,--.

Column 2, line 29, "9_1" should read --**91**--.

Column 2, line 29, "9_1" should read --**91**--.

Column 2, line 59, "was" should read --is--.

Column 2, line 62, "vary" should read --varying--.

Column 2, line 63, "is" should read --are--.

Column 2, line 63, "is" should read --are--.

Column 2, line 64, "it necessitates" should read --they necessitate--.

Column 3, line 26, "rift" should read --lift--.

Column 3, line 40, "whenever-going" should read --whenever going--.

Column 3, line 66 through Column 4, line 44, should be deleted.

Column 4, line 56, "DISCLOSER", should read --DISCLOSURE--.

Column 4, line 59, delete "in claim 1".

Column 5, line 1, delete "in claim 2".

Column 5, line 7, delete "in claim 3".

Column 5, line 17, delete "in claim 4".

Column 5, line 27, delete "in claim 5".

UNITED STATES PATENT AND TRADEMARK OFFICE

CERTIFICATE OF CORRECTION

(continued)

Column 5, line 28, delete "according to claim 4".

Column 5, line 32, delete "in claim 6".

Column 5, line 33, delete "according to claim 4".

Column 5, line 37, delete "in claim 7".

Column 5, line 38, delete "according to one of claims 4 to 6".

Column 5, line 43, delete "of claim 1".

Column 5, line 48, delete "of claim 2".

Column 7, line 47, "zener (both occurrences)" should read --Zener--.

In the Claims

Column 10, line 48, "recfifying" should read --rectifying--.

Column 10, line 62, "the" should read --wherein the--.

Column 10, line 65, "An" should read --A--.

MAILING ADDRESS OF SENDER:
Baker Botts L.L.P.
30 Rockefeller Plaza
New York, New York 10112

PATENT NO. 6,223,990

No. of add'l copies _____
@30¢ per page

UNITED STATES PATENT AND TRADEMARK OFFICE
CERTIFICATE OF CORRECTION

PATENT NO. : 6,223,990

DATED : May 1, 2001

INVENTOR(S) : Shinji Kamei

It is certified that errors appear in the above-identified patent and that said Letters Patent is hereby corrected as shown below:

In the Specification

Column 1, line 18, "rifts," should read --lifts,--.

Column 2, line 29, "9_1" should read --91--.

Column 2, line 29, "9_1" should read --91--.

Column 2, line 59, "was" should read --is--.

Column 2, line 62, "vary" should read --varying--.

Column 2, line 63, "is" should read --are--.

Column 2, line 63, "is" should read --are--.

Column 2, line 64, "it necessitates" should read --they necessitate--.

Column 3, line 26, "rift" should read --lift--.

Column 3, line 40, "whenever-going" should read --whenever going--.

Column 3, line 66 through Column 4, line 44, should be deleted.

Column 4, line 56, "DISCLOSER", should read --DISCLOSURE--.

Column 4, line 59, delete "in claim 1".

Column 5, line 1, delete "in claim 2".

Column 5, line 7, delete "in claim 3".

Column 5, line 17, delete "in claim 4".

Column 5, line 27, delete "in claim 5".

UNITED STATES PATENT AND TRADEMARK OFFICE

CERTIFICATE OF CORRECTION

(continued)

Column 5, line 28, delete "according to claim 4".

Column 5, line 32, delete "in claim 6".

Column 5, line 33, delete "according to claim 4".

Column 5, line 37, delete "in claim 7".

Column 5, line 38, delete "according to one of claims 4 to 6".

Column 5, line 43, delete "of claim 1".

Column 5, line 48, delete "of claim 2".

Column 7, line 47, "zener (both occurrences)" should read --Zener--.

In the Claims

Column 10, line 48, "recfifying" should read --rectifying--.

Column 10, line 62, "the" should read --wherein the--.

Column 10, line 65, "An" should read --A--.

MAILING ADDRESS OF SENDER:
Baker Botts L.L.P.
30 Rockefeller Plaza
New York, New York 10112

PATENT NO. 6,223,990

No. of add'l copies _____
@30¢ per page

Under the Paperwork Reduction Act of 1995, no persons are required to respond to a collection of information unless it displays valid OMB control number.

PETITION TO ACCEPT UNINTENTIONALLY DELAYED PAYMENT OF MAINTENANCE FEE IN AN EXPIRED PATENT (37 CFR 1.378(c))

Patent Number	Issue Date (YYYY-MM-DD)	Application Number	Filing Date (YYYY-MM-DD)	Docket Number (if applicable)
6259472	2001-07-10	08973968	1998-04-22	Q48729

CAUTION: Maintenance fee (and surcharge, if any) payment must correctly identify: (1) the patent number and (2) the application number of the actual U.S. application leading to issuance of that patent to ensure the fee(s) is/are associated with the correct patent. 37 CFR 1.366(c) and (d).

SMALL ENTITY
☐ Patentee claims, or has previously claimed, small entity status. See 37 CFR 1.27.

LOSS OF ENTITLEMENT TO SMALL ENTITY STATUS
☐ Patentee is no longer entitled to small entity status. See 37 CFR 1.27(g)

NOT Small Entity		Small Entity	
Fee	Code	Fee	Code
◉ 3 ½ year	(1551)	○ 3 ½ year	(2551)
○ 7 ½ year	(1552)	○ 7 ½ year	(2552)
○ 11 ½ year	(1553)	○ 11 ½ year	(2553)

SURCHARGE
The surcharge required by 37 CFR 1.20(i)(2) (Fee Code 1558) must be paid as a condition of accepting unintentionally delayed payment of the maintenance fee.

MAINTENANCE FEE (37 CFR 1.20(e)-(g))
The appropriate maintenance fee must be submitted with this petition.

STATEMENT
THE UNDERSIGNED CERTIFIES THAT THE DELAY IN PAYMENT OF THE MAINTENANCE FEE TO THIS PATENT WAS UNINTENTIONAL

PETITIONER(S) REQUEST THAT THE DELAYED PAYMENT OF THE MAINTENANCE FEE BE ACCEPTED AND THE PATENT REINSTATED

THIS PORTION MUST BE COMPLETED BY THE SIGNATORY OR SIGNATORIES

37 CFR 1.378(d) states: "Any petition under this section must be signed by an attorney or agent registered to practice before the Patent and Trademark Office, or by the patentee, the assignee, or other party in interest."

I certify, in accordance with 37 CFR 1.4(d)(4) that I am

◉ An attorney or agent registered to practice before the Patent and Trademark Office

○ A sole patentee

○ A joint patentee; I certify that I am authorized to sign this submission on behalf of all the other patentees.

○ A joint patentee; all of whom are signing this e-petition

○ The assignee of record of the entire interest

Patent Practitioner			
A signature of the applicant or representative is required in accordance with 37 CFR 1.33 and 10.18. Please see 37 CFR 1.4(d) for the form of the signature			
Signature	/Darryl Mexic/	Date (YYYY-MM-DD)	2006-10-17
Name	Darryl Mexic	Registration Number	23063

This collection of information is required by 37 CFR 1.378(c). The information is required to obtain or retain a benefit by the public which is to file (and by the USPTO to process) an application. Confidentiality is governed by 35 U.S.C. 122 and 37 CFR 1.11 and 1.14. This collection is estimated to take 1 hour to complete, including gathering, preparing, and submitting the completed application form to the USPTO. Time will vary depending upon the individual case. Any comments on the amount of time you require to complete this form and/ or suggestions for reducing this burden, should be sent to the Chief Information Officer, U.S. Patent and Trademark Office, U.S. Department of Commerce, P.O. Box 1450, Alexandria, VA 22313-1450. DO NOT SEND FEES OR COMPLETED FORMS TO THIS ADDRESS. **This form can only be used when in conjunction with EFS-Web. If this form is mailed to the USPTO, it may cause delays in reinstating the patent.**

Privacy Act Statement

The Privacy Act of 1974 (P.L. 93-579) requires that you be given certain information in connection with your submission of the attached form related to a patent application or patent. Accordingly, pursuant to the requirements of the Act, please be advised that: (1) the general authority for the collection of this information is 35 U.S.C. 2(b)(2); (2) furnishing of the information solicited is voluntary; and (3) the principal purpose for which the information is used by the U.S. Patent and Trademark Office is to process and/or examine your submission related to a patent application or patent. If you do not furnish the requested information, the U.S. Patent and Trademark Office may not be able to process and/or examine your submission, which may result in termination of proceedings or abandonment of the application or expiration of the patent.

The information provided by you in this form will be subject to the following routine uses:

1. The information on this form will be treated confidentially to the extent allowed under the Freedom of Information Act (5 U.S.C. 552) and the Privacy Act (5 U.S.C. 552a). Records from this system of records may be disclosed to the Department of Justice to determine whether the Freedom of Information Act requires disclosure of these record s.

2. A record from this system of records may be disclosed, as a routine use, in the course of presenting evidence to a court, magistrate, or administrative tribunal, including disclosures to opposing counsel in the course of settlement negotiations.

3. A record in this system of records may be disclosed, as a routine use, to a Member of Congress submitting a request involving an individual, to whom the record pertains, when the individual has requested assistance from the Member with respect to the subject matter of the record.

4. A record in this system of records may be disclosed, as a routine use, to a contractor of the Agency having need for the information in order to perform a contract. Recipients of information shall be required to comply with the requirements of the Privacy Act of 1974, as amended, pursuant to 5 U.S.C. 552a(m).

5. A record related to an International Application filed under the Patent Cooperation Treaty in this system of records may be disclosed, as a routine use, to the International Bureau of the World Intellectual Property Organization, pursuant to the Patent Cooperation Treaty.

6. A record in this system of records may be disclosed, as a routine use, to another federal agency for purposes of National Security review (35 U.S.C. 181) and for review pursuant to the Atomic Energy Act (42 U.S.C. 218(c)).

7. A record from this system of records may be disclosed, as a routine use, to the Administrator, General Services, or his/her designee, during an inspection of records conducted by GSA as part of that agency's responsibility to recommend improvements in records management practices and programs, under authority of 44 U.S.C. 2904 and 2906. Such disclosure shall be made in accordance with the GSA regulations governing inspection of records for this purpose, and any other relevant (i.e., GSA or Commerce) directive. Such disclosure shall not be used to make determinations about individuals.

8. A record from this system of records may be disclosed, as a routine use, to the public after either publication of the application pursuant to 35 U.S.C. 122(b) or issuance of a patent pursuant to 35 U.S.C. 151. Further, a record may be disclosed, subject to the limitations of 37 CFR 1.14, as a routine use, to the public if the record was filed in an application which became abandoned or in which the proceedings were terminated and which application is referenced by either a published application, an application open to public inspections or an issued patent.

9. A record from this system of records may be disclosed, as a routine use, to a Federal, State, or local law enforcement agency, if the USPTO becomes aware of a violation or potential violation of law or regulation.

UNITED STATES PATENT AND TRADEMARK OFFICE

Commissioner for Patents
United States Patent and Trademark Office
P.O. Box 1450
Alexandria, VA 22313-1450
www.uspto.gov

In re Patent No. 6259472
Issue Date: July 10,2001
Application No. 08973968
Filed: April 22,1998
Attorney Docket No. Q48729

:

:DECISION GRANTING PETITION
:UNDER 37 CFR 1.378(c)

:

This is a decision on the electronic petition, filed October 17,2006 ,under 37 CFR 1.378(c) to accept the unintentionally delayed payment of the 3.5 year maintenance fee for the above-identified patent.

The petition is GRANTED.

The maintenance fee is accepted, and the above-identified patent reinstated as of October 17,2006 . This decision also constitutes notice that the fee has been accepted. An electronic copy of the petition and this decision has been created as an entry in an Image File Wrapper. Nevertheless, petitioner should print and retain an independent copy

Telephone inquires related to this electronic decision should be directed to the Electronic Business Center at 1-866-217-9197.

UNITED STATES PATENT AND TRADEMARK OFFICE

COMMISSIONER FOR PATENTS
UNITED STATES PATENT AND TRADEMARK OFFICE
WASHINGTON, D.C. 20231
www.uspto.gov

Paper No. 19

Scott C. Harris
FISH & RICHARDSON P.C.
4350 La Jolla Village Drive, Suite 500
San Diego, CA 92122

MAILED

APR 08 2002

OFFICE OF DIRECTOR
GROUP

In re Application of:
Takeshi Nishi
Application No. 08/974,621
Filed: November 19, 1997
Attorney Docket No.: 07977-202001/US3497

DECISION

This is a decision on the petition under 37 C.F.R. § 1.181, filed by facsimile on February 05, 2002, to withdraw the holding of abandonment in the above identified application[1].

The petition is **GRANTED.**

The application was held abandoned for failure to respond to the Office action mailed on April 18, 2001. A Notice of Abandonment was mailed on November 29, 2001.

A review of the application file record reveals that a timely filed response to the Office action including a Request for Continued Examination (RCE) and a request for an extension of time was not associated with the application file at the time that the Notice of Abandonment was mailed, but has since been located and matched with the application file. Accordingly, the petition is granted. The Notice of Abandonment is hereby vacated and the holding of abandonment withdrawn. The application is restored to pending status.

The application file is being forwarded to the Technology Center 2800 support staff for entry of the RCE. From there, the application will be forwarded to the examiner for further action.

Inquiries regarding this decision should be directed to Clayton E. LaBalle at (703) 308-0519.

Hien H. Phan, Special Programs Examiner
Technology Center 2800
Semiconductors, Electrical and Optical
Systems and Components

---

[1] This is a copy of the original petition which was matched with the application file wrapper on February 19, 2002.

UNITED STATES PATENT AND TRADEMARK OFFICE

Commissioner for Patents
United States Patent and Trademark Office
PO Box 1450
Arlington, VA 22313-1450
www.uspto.gov

Paper No. 22

James A. Kushman
Brooks & Kushman
1000 Town Center, 22nd Fl.
Southfield, MI 48075

COPY MAILED

MAY 2 8 2003

OFFICE OF PETITIONS

In re Application of :
David B. Nitschke et al. :
Application No. 08/975,267 :
Filed: November 20, 1997 :
Attorney Docket No. GLT 15998 PUS :

ON PETITION

This is a decision on the renewed petition under 37 CFR 1.137(b), filed April 28, 2003, to revive the above-identified application.

The petition is Granted.

The above-identified application became abandoned as a result of petitioner's failure to take appropriate action in a timely manner after the decision of November 19, 2002 by the board of Patent Appeals and Interferences. Therefore, the proceedings as to the rejected claims were terminated. See 37 CFR 1.197(c). As no claim was allowed, the-above-identified application became abandoned on January 20, 2003. See MPEP 1214.06.

The application file is being forwarded to Technology Center AU 1731 for processing the Request for Continued Examination pursuant to 37 CFR 1.114 filed with the instant petition.

Telephone inquiries concerning this decision should be directed to Latrice Bond at (703) 308-6911.

Latrice Bond

Latrice Bond
Paralegal Specialist
Office of Petitions
Office of the Deputy Commissioner
For Patent Examination Policy

SPE RESPONSE FOR CERTIFICATE OF CORRECTION

Paper No.: _____

DATE : July 23,2005

TO SPE OF : ART UNIT 1731

SUBJECT : Request for Certificate of Correction on Patent No.: 6,729,160

A response is requested with respect to the accompanying request for a certificate of correction.

Please complete this form and return with file, within 7 days to:
Palm location **7580; Certificates of Correction Branch – South Tower – 9A22**
If response is for an IFW, **return to employee (named below) via PUBSCofC Team in MADRAS.**
With respect to the change(s) requested, correcting Office and/or Applicant's errors, should the patent read as shown in the certificate of correction (COCIN)? No new matter should be introduced, nor should the scope or meaning of the claims be changed.

Magdalene Talley

Thank You For Your Assistance

Certificates of Correction Branch
Tel. No. 703-308-9309 ext. 116

The request for issuing the above-identified correction(s) is hereby:
Note your decision on the appropriate box.

- [x] **Approved** — **All** changes apply.
- [ ] **Approved in Part** — Specify below which changes **do not** apply.
- [ ] **Denied** — State the reasons for denial below.

Comments:

See the attached marked up copy of Form PTO/SB/44 for corrections which should be made prior to C of C issuance.

STEVEN P. GRIFFIN
SUPERVISORY PATENT EXAMINER
TECHNOLOGY CENTER 1700

Steven P. Griffin
SPE

1731
Art Unit

PTO/SB/ 44 (10-96)
Approved for use through 6/30/99. OMB 0651-0033
Patent and Trademark Office; U.S. DEPARTMENT OF COMMERCE
Under the Paperwork Reduction Act of 1995, no persons are required to respond to a collection of information unless it displays a valid OMB control number.

(Also Form PTO-1050)

UNITED STATES PATENT AND TRADEMARK OFFICE

CERTIFICATE OF CORRECTION

PATENT NO : 6,729,160 B1

DATED : May 4, 2004

INVENTOR(S) : DAVID B. NITSCHKE, et al.

It is certified that error appears in the above-identified patent and that said Letters Patent are hereby corrected as shown below:

In the Title:
Delete "and Method"

Column 22, Line 5, Claim 1:
Delete "hated" and insert --heated--.

Column 23, Line 5, ~~Claim 7:~~ Claim 5
Delete "permit" and insert --permitting--.

Column 23, Line 24, ~~Claim 5:~~ Claim 7
After "and" insert --a--.

Column 23, Line 48, Claim 8:
Delete "between an idle position horizontally spaced from the upper mold and a use position below the".

Column 23, Line 54, Claim 8:
Delete "arid" and insert --and--.

Column 24, Line 4, Claim 9:
After "mold," insert --and the lower mold shuttle having a tubular construction through which a liquid coolant flows to provide cooling--

Column 24, Line 13, Claim 9:
Delete ", the lower mold support assembly including four lower supports that support the lower mold in the use position below the upper mold, a pair of support members each of which mounts two of the lower supports, the support members mounting a support and stop member, and a gas jet pump array that is supported and positioned by the support and stop member"

MAILING ADDRESS OF SENDER:

BROOKS KUSHMAN P.C.
1000 Town Center, 22nd Floor
Southfield, Michigan 48075-1238

PATENT NO. 6,729,160 B1

No. of additional copies

2

Burden Hour Statement: This form is estimated to take 1.0 hour to complete. Time will vary depending upon the needs of the individual case. Any comments on the amount of time you are required to complete this form should be sent to the Chief Information Officer, U.S. Patent & Trademark Office, P.O. Box 1450, Alexandria, VA 22313-1450. DO NOT SEND FEES OR COMPLETED FORMS TO THIS ADDRESS. SEND TO: Attention Certificate of Corrections Branch, Commissioner for Patents, U.S. Patent & Trademark Office, P.O. Box 1450, Alexandria, VA 22313-1450.

JUN 17 2004

UNITED STATES PATENT AND TRADEMARK OFFICE

Commissioner for Patents
United States Patent and Trademark Office
P.O. Box 1450
Alexandria, VA 22313-1450
www.uspto.gov

MAY 4 2006

In re Patent No. ZHANG ET AL.	
Issue Date: February 27, 2001	**DECISION GRANTING**
Appl No.: 08/975,519	**PETITION**
Filed: November 20, 1997	*37 CFR 1.324*
For: METHOD FOR PRODUCTION AND PURIFICATION OF ADENOVIRAL VECTORS	

This is a decision on the petition filed February 6, 2003 to correct inventorship under 37 CFR 1.324.

The petition is granted.

The patented file is being forwarded to Certificate of Corrections Branch for issuance of a certificate naming only the actual inventor or inventors.

James C. Housel

James Housel
Supervisory Patent Examiner
Art Unit 1648
Technology Center 1648

Fulbright & Jaworski
600 Congress Avenue, Suite 1900
Austin, TX 78701

SPE RESPONSE FOR CERTIFICATE OF CORRECTION

DATE : 10/26/04

Paper No.: _____

TO SPE OF : ART UNIT 1600

SUBJECT : Request for Certificate of Correction on Patent No.: 6194191 B1

A response is requested with respect to the accompanying request for a certificate of correction.

Please complete this form and return with file, within **7** days to:
Certificates of Correction Branch - PK 3-915
Palm location **7580** - Tel. No. 305-8309

With respect to the change(s) requested, correcting Office and/or Applicant's errors, should the patent read as shown in the certificate of correction? No new matter should be introduced, nor should the scope or meaning of the claims be changed.

Virginia Tolbert
Certificates of Correction Branch

Thank You For Your Assistance

The request for issuing the above-identified correction(s) is hereby:
Note your decision on the appropriate box.

- [x] **Approved** — **All** changes apply.
- [ ] **Approved in Part** — Specify below which changes **do not** apply.
- [ ] **Denied** — State the reasons for denial below.

Comments:

James C. Housel
SPE

1648
Art Unit

UNITED STATES PATENT AND TRADEMARK OFFICE

OIPE
SEP 29 2008
PATENT & TRADEMARK OFFICE

Director for Patents
United States Patent and Trademark Office
P.O. Box 1450
Alexandria, VA 22313-1450
www.uspto.gov

Paper No. 9

MICHAEL J. PERSSON
72 NORTH MAIN STREET
CONCORD, NH 03301

COPY MAILED
SEP 09 2008

In re Patent No. 5,957,755 :
Issue Date: September 28, 1999 :
Application No. 08/975,726 : ON PETITION
Filed: November 21, 1997 :
Attorney Docket No. 1302-014 :

This is a decision on the petition under 37 CFR 1.378(c), filed July 21, 2008, to accept an unintentionally delayed payment of the maintenance fees for the above-identified patent.

The petition is DISMISSED.

A review of the record discloses that the above-identified patent issued on September 28, 1999. Therefore, the grace period in 35 U.S.C. § 41(b) for paying the first maintenance fee expired on September 28, 2003.

35 U.S.C. § 41(c)(1) authorizes the Director to accept a delayed maintenance fee payment within twenty-four (24) months after the expiration of the six-month grace period specified in 35 U.S.C. § 41(b) if the delay is shown to have been unintentional, and authorizes the Director to accept a delayed maintenance fee payment at any time if the delay is shown to have been unavoidable. Thus, 35 U.S.C. § 41(c)(1) does not authorize the Director to accept a delayed maintenance fee payment later than twenty-four (24) months after the expiration of the six-month grace period specified in 35 U.S.C. § 41(b) unless the delay is shown to have been unavoidable. Since the instant petition was not filed within twenty-four (24) months after the expiration of the six-month grace period specified in 35 U.S.C. § 41(b), the Director cannot accept a delayed maintenance fee payment for the above-identified patent under 37 CFR 1.378(c).

Patentee may wish to pursue reinstatement of the patent under the unavoidable provisions of 37 CFR 1.378(b). A petition to accept the delayed payment of a maintenance fee under 35 USC 41(c) and 37 CFR 1.378(b) must be accompanied by (1) an adequate, showing that the delay was unavoidable, since reasonable care was taken to insure that the maintenance fee would be paid timely and that the petition was filed promptly after the patentee was notified of, or otherwise became aware of, the expiration of the patent, (2) payment of the appropriate maintenance fee, unless previously submitted, and (3) payment of the surcharge set forth in 37 CFR 1.20(i)(1). Further, if a petition for

reinstatement of the patent under the unavoidable provisions is filed on behalf of the assignee, the petition must also comply with the provisions of 37 CFR 3.73(b).

Since the patent will not be reinstated pursuant to 37 CFR 1.378(c), petitioner may request a refund of the $2,820 fees submitted with the petition. The request should be made in writing and addressed to: Mail Stop 16, Director of the U.S. Patent and Trademark Office, P. O. Box 1450, Alexandria, VA 22313-1450. A copy of this decision should accompany petitioner's request.

Further correspondence with respect to this matter should be addressed as follows:

By mail: Mail Stop PETITIONS
Commissioner for Patents
Post Office Box 1450
Alexandria, VA 22313-1450

By hand: Customer Service Window
Mail Stop Petitions
Randolph Building
401 Dulany Street
Alexandria, VA 22314

By fax: (571) 273-8300
ATTN: Office of Petitions

The file does not indicate a change of address has been submitted, although the address given on the petition differs from the address of record. If appropriate, a change of address should be filed in accordance with MPEP 601.03. A courtesy copy of this decision is being mailed to the address given on the petition; however, the Office will mail all future correspondence solely to the address of record.

Telephone inquiries concerning this matter may be directed to the undersigned at (571) 272-3204.

Sherry D. Brinkley
Petitions Examiner
Office of Petitions

cc: MICHAEL J. PERSSON
LAWSON & PERSSON
P.O. BOX 712
LACONIA, NH 03247

UNITED STATES PATENT AND TRADEMARK OFFICE

Commissioner for Patents
United States Patent and Trademark Office
P.O. Box 1450
Alexandria, VA 22313-1450
www.uspto.gov

In re Patent No. 6440088
Issue Date: August 27,2002
Application No. 08975769
Filed: November 21,1997
Attorney Docket No. T3824CIP1

:
:DECISION GRANTING PETITION
:UNDER 37 CFR 1.378(c)
:

This is a decision on the electronic petition, filed October 26,2006 ,under 37 CFR 1.378(c) to accept the unintentionally delayed payment of the 3.5 year maintenance fee for the above-identified patent.

The petition is GRANTED.

The maintenance fee is accepted, and the above-identified patent reinstated as of October 26,2006 . This decision also constitutes notice that the fee has been accepted. An electronic copy of the petition and this decision has been created as an entry in an Image File Wrapper. Nevertheless, petitioner should print and retain an independent copy

Telephone inquires related to this electronic decision should be directed to the Electronic Business Center at 1-866-217-9197.

Under the Paperwork Reduction Act of 1995, no persons are required to respond to a collection of information unless it displays valid OMB control number.

PETITION TO ACCEPT UNINTENTIONALLY DELAYED PAYMENT OF MAINTENANCE FEE IN AN EXPIRED PATENT (37 CFR 1.378(c))

Patent Number	Issue Date (YYYY-MM-DD)	Application Number	Filing Date (YYYY-MM-DD)	Docket Number (if applicable)
6440088	2002-08-27	08975769	1997-11-21	1001.1847102

CAUTION: Maintenance fee (and surcharge, if any) payment must correctly identify: (1) the patent number and (2) the application number of the actual U.S. application leading to issuance of that patent to ensure the fee(s) is/are associated with the correct patent. 37 CFR 1.366(c) and (d).

SMALL ENTITY
☐ Patentee claims, or has previously claimed, small entity status. See 37 CFR 1.27.

LOSS OF ENTITLEMENT TO SMALL ENTITY STATUS
☒ Patentee is no longer entitled to small entity status. See 37 CFR 1.27(g)

NOT Small Entity		Small Entity	
Fee	Code	Fee	Code
◉ 3 ½ year	(1551)	○ 3 ½ year	(2551)
○ 7 ½ year	(1552)	○ 7 ½ year	(2552)
○ 11 ½ year	(1553)	○ 11 ½ year	(2553)

SURCHARGE
The surcharge required by 37 CFR 1.20(i)(2) (Fee Code 1558) must be paid as a condition of accepting unintentionally delayed payment of the maintenance fee.

MAINTENANCE FEE (37 CFR 1.20(e)-(g))
The appropriate maintenance fee must be submitted with this petition.

STATEMENT
THE UNDERSIGNED CERTIFIES THAT THE DELAY IN PAYMENT OF THE MAINTENANCE FEE TO THIS PATENT WAS UNINTENTIONAL

PETITIONER(S) REQUEST THAT THE DELAYED PAYMENT OF THE MAINTENANCE FEE BE ACCEPTED AND THE PATENT REINSTATED

THIS PORTION MUST BE COMPLETED BY THE SIGNATORY OR SIGNATORIES

37 CFR 1.378(d) states: "Any petition under this section must be signed by an attorney or agent registered to practice before the Patent and Trademark Office, or by the patentee, the assignee, or other party in interest."

I certify, in accordance with 37 CFR 1.4(d)(4) that I am

◉ An attorney or agent registered to practice before the Patent and Trademark Office

○ A sole patentee

○ A joint patentee; I certify that I am authorized to sign this submission on behalf of all the other patentees.

○ A joint patentee; all of whom are signing this e-petition

○ The assignee of record of the entire interest

Patent Practitioner			
A signature of the applicant or representative is required in accordance with 37 CFR 1.33 and 10.18. Please see 37 CFR 1.4(d) for the form of the signature			
Signature	/j. scot wickhem/	Date (YYYY-MM-DD)	2006-10-26
Name	J. SCOT WICKHEM	Registration Number	41376

This collection of information is required by 37 CFR 1.378(c). The information is required to obtain or retain a benefit by the public which is to file (and by the USPTO to process) an application. Confidentiality is governed by 35 U.S.C. 122 and 37 CFR 1.11 and 1.14. This collection is estimated to take 1 hour to complete, including gathering, preparing, and submitting the completed application form to the USPTO. Time will vary depending upon the individual case. Any comments on the amount of time you require to complete this form and/ or suggestions for reducing this burden, should be sent to the Chief Information Officer, U.S. Patent and Trademark Office, U.S. Department of Commerce, P.O. Box 1450, Alexandria, VA 22313-1450. DO NOT SEND FEES OR COMPLETED FORMS TO THIS ADDRESS. **This form can only be used when in conjunction with EFS-Web. If this form is mailed to the USPTO, it may cause delays in reinstating the patent.**

Privacy Act Statement

The Privacy Act of 1974 (P.L. 93-579) requires that you be given certain information in connection with your submission of the attached form related to a patent application or patent. Accordingly, pursuant to the requirements of the Act, please be advised that: (1) the general authority for the collection of this information is 35 U.S.C. 2(b)(2); (2) furnishing of the information solicited is voluntary; and (3) the principal purpose for which the information is used by the U.S. Patent and Trademark Office is to process and/or examine your submission related to a patent application or patent. If you do not furnish the requested information, the U.S. Patent and Trademark Office may not be able to process and/or examine your submission, which may result in termination of proceedings or abandonment of the application or expiration of the patent.

The information provided by you in this form will be subject to the following routine uses:

1. The information on this form will be treated confidentially to the extent allowed under the Freedom of Information Act (5 U.S.C. 552) and the Privacy Act (5 U.S.C. 552a). Records from this system of records may be disclosed to the Department of Justice to determine whether the Freedom of Information Act requires disclosure of these record s.

2. A record from this system of records may be disclosed, as a routine use, in the course of presenting evidence to a court, magistrate, or administrative tribunal, including disclosures to opposing counsel in the course of settlement negotiations.

3. A record in this system of records may be disclosed, as a routine use, to a Member of Congress submitting a request involving an individual, to whom the record pertains, when the individual has requested assistance from the Member with respect to the subject matter of the record.

4. A record in this system of records may be disclosed, as a routine use, to a contractor of the Agency having need for the information in order to perform a contract. Recipients of information shall be required to comply with the requirements of the Privacy Act of 1974, as amended, pursuant to 5 U.S.C. 552a(m).

5. A record related to an International Application filed under the Patent Cooperation Treaty in this system of records may be disclosed, as a routine use, to the International Bureau of the World Intellectual Property Organization, pursuant to the Patent Cooperation Treaty.

6. A record in this system of records may be disclosed, as a routine use, to another federal agency for purposes of National Security review (35 U.S.C. 181) and for review pursuant to the Atomic Energy Act (42 U.S.C. 218(c)).

7. A record from this system of records may be disclosed, as a routine use, to the Administrator, General Services, or his/her designee, during an inspection of records conducted by GSA as part of that agency's responsibility to recommend improvements in records management practices and programs, under authority of 44 U.S.C. 2904 and 2906. Such disclosure shall be made in accordance with the GSA regulations governing inspection of records for this purpose, and any other relevant (i.e., GSA or Commerce) directive. Such disclosure shall not be used to make determinations about individuals.

8. A record from this system of records may be disclosed, as a routine use, to the public after either publication of the application pursuant to 35 U.S.C. 122(b) or issuance of a patent pursuant to 35 U.S.C. 151. Further, a record may be disclosed, subject to the limitations of 37 CFR 1.14, as a routine use, to the public if the record was filed in an application which became abandoned or in which the proceedings were terminated and which application is referenced by either a published application, an application open to public inspections or an issued patent.

9. A record from this system of records may be disclosed, as a routine use, to a Federal, State, or local law enforcement agency, if the USPTO becomes aware of a violation or potential violation of law or regulation.

UNITED STATES PATENT AND TRADEMARK OFFICE

UNITED STATES DEPARTMENT OF COMMERCE
United States Patent and Trademark Office
Address: COMMISSIONER FOR PATENTS
P.O. Box 1450
Alexandria, Virginia 22313-1450
www.uspto.gov

SEYFARTH SHAW LLP
131 S. DEARBORN ST., SUITE 2400
CHICAGO, IL 60603-5803

Mail Date: 07/12/2010

Applicant	: ANTHONY J. BAERLOCHER	: DECISION ON REQUEST FOR
Patent Number	: 6435970	: RECALCULATION of PATENT
Issue Date	: 08/20/2002	: TERM ADJUSTMENT IN VIEW
Application No	: 08/976,165	: OF WYETH
Filed	: 11/21/1997	:
		:

The Patentee's Request for Recalculation is **DISMISSED.**

This Request is deemed ineligible for consideration for one or more of the following reasons:

(A). The patent for which PTA recalculation is requested is either a design or reissue application or is a reexamination proceeding;

(B). The patent for which PTA recalculation is requested resulted from a utility or plant application filed under 35 USC 111(a) before May 29, 2000 and no CPA filed in the application on/after May 29, 2000;

(C). The patent for which PTA recalculation is requested resulted from an international application in which the international filing date was before May 29, 2000 and no CPA filed in the application on/after May 29, 2000;

(D). The patent for which PTA recalculation is requested issued on/after March 2, 2010;

(E). The Request for Recalculation was filed more than 180 days after the grant date of the patent and the request was not filed within two months of a dismissal of a request for reconsideration of the of the patent term under 37 CFR 1.705(d);

(F). The Request for Recalculation is not solely limited to USPTO pre-Wyeth interpretation of 35 U.S.C. 154(b)(2)(A);

or

(G). A civil action was filed pursuant to 35 U.S.C. 154(b)(4)(A)concerning the same patent at issue in this request.

Patentee may file a reply to this decision dismissing the Request for Recalculation. Patentee must file such reply within one month or thirty days, whichever is longer, of the mail date of the decision dismissing the Request for Recalculation. No fee is required if patentee is asserting in the reply that the dismissal for ineligibility is improper.

Patentee should use document code PET.OP if electronically filing a reply to this dismissal. If the USPTO finds that the request was improperly deemed ineligible, the USPTO will mail applicant a recalculation determination.

Patentee should be aware that in order to preserve the right to review in the United States District Court for the District of Columbia of the USPTO patent term adjustment determination, patentee must ensure that he or she also take the steps required under 35 U.S.C. 154(b)(4)(A). Nothing in the request for recalculation should be construed as providing an alternative time frame for commencing a civil action under 35 U.S.C. 154 (b)(4)(A).

Any questions concerning this decision should be directed to the Office of Patent Legal Administration at 571-272-7702.

UNITED STATES PATENT AND TRADEMARK OFFICE

Commissioner for Patents
United States Patent and Trademark Office
P.O. Box 1450
Alexandria, VA 22313-1450
www.uspto.gov

In re Patent No. 6315997
Issue Date: November 13,2001
Application No. 08976288
Filed: November 21,1997
Attorney Docket No. P66-38228

:
:DECISION GRANTING PETITION
:UNDER 37 CFR 1.378(c)
:

This is a decision on the electronic petition, filed April 10,2007 ,under 37 CFR 1.378(c) to accept the unintentionally delayed payment of the 3.5 year maintenance fee for the above-identified patent.

The petition is GRANTED.

The maintenance fee is accepted, and the above-identified patent reinstated as of April 10,2007 . This decision also constitutes notice that the fee has been accepted. An electronic copy of the petition and this decision has been created as an entry in an Image File Wrapper. Nevertheless, petitioner should print and retain an independent copy

Telephone inquires related to this electronic decision should be directed to the Electronic Business Center at 1-866-217-9197.

Under the Paperwork Reduction Act of 1995, no persons are required to respond to a collection of information unless it displays valid OMB control number.

PETITION TO ACCEPT UNINTENTIONALLY DELAYED PAYMENT OF MAINTENANCE FEE IN AN EXPIRED PATENT (37 CFR 1.378(c))

Patent Number	Issue Date (YYYY-MM-DD)	Application Number	Filing Date (YYYY-MM-DD)	Docket Number (if applicable)
6315997	2001-11-13	08976288	1997-11-21	SOMA1140-2

CAUTION: Maintenance fee (and surcharge, if any) payment must correctly identify: (1) the patent number and (2) the application number of the actual U.S. application leading to issuance of that patent to ensure the fee(s) is/are associated with the correct patent. 37 CFR 1.366(c) and (d).

SMALL ENTITY
☒ Patentee claims, or has previously claimed, small entity status. See 37 CFR 1.27.

LOSS OF ENTITLEMENT TO SMALL ENTITY STATUS
☐ Patentee is no longer entitled to small entity status. See 37 CFR 1.27(g)

NOT Small Entity			Small Entity		
	Fee	Code		Fee	Code
○	3 ½ year	(1551)	◉	3 ½ year	(2551)
○	7 ½ year	(1552)	○	7 ½ year	(2552)
○	11 ½ year	(1553)	○	11 ½ year	(2553)

SURCHARGE
The surcharge required by 37 CFR 1.20(i)(2) (Fee Code 1558) must be paid as a condition of accepting unintentionally delayed payment of the maintenance fee.

MAINTENANCE FEE (37 CFR 1.20(e)-(g))
The appropriate maintenance fee must be submitted with this petition.

STATEMENT
THE UNDERSIGNED CERTIFIES THAT THE DELAY IN PAYMENT OF THE MAINTENANCE FEE TO THIS PATENT WAS UNINTENTIONAL

PETITIONER(S) REQUEST THAT THE DELAYED PAYMENT OF THE MAINTENANCE FEE BE ACCEPTED AND THE PATENT REINSTATED

THIS PORTION MUST BE COMPLETED BY THE SIGNATORY OR SIGNATORIES

37 CFR 1.378(d) states: "Any petition under this section must be signed by an attorney or agent registered to practice before the Patent and Trademark Office, or by the patentee, the assignee, or other party in interest."

I certify, in accordance with 37 CFR 1.4(d)(4) that I am

◉ An attorney or agent registered to practice before the Patent and Trademark Office

○ A sole patentee

○ A joint patentee; I certify that I am authorized to sign this submission on behalf of all the other patentees.

○ A joint patentee; all of whom are signing this e-petition

○ The assignee of record of the entire interest

Patent Practitioner			
A signature of the applicant or representative is required in accordance with 37 CFR 1.33 and 10.18. Please see 37 CFR 1.4(d) for the form of the signature			
Signature	/lah/	Date (YYYY-MM-DD)	2007-04-10
Name	Lisa A. Haile, J.D., Ph.D.	Registration Number	38347

This collection of information is required by 37 CFR 1.378(c). The information is required to obtain or retain a benefit by the public which is to file (and by the USPTO to process) an application. Confidentiality is governed by 35 U.S.C. 122 and 37 CFR 1.11 and 1.14. This collection is estimated to take 1 hour to complete, including gathering, preparing, and submitting the completed application form to the USPTO. Time will vary depending upon the individual case. Any comments on the amount of time you require to complete this form and/ or suggestions for reducing this burden, should be sent to the Chief Information Officer, U.S. Patent and Trademark Office, U.S. Department of Commerce, P.O. Box 1450, Alexandria, VA 22313-1450. DO NOT SEND FEES OR COMPLETED FORMS TO THIS ADDRESS. **This form can only be used when in conjunction with EFS-Web. If this form is mailed to the USPTO, it may cause delays in reinstating the patent.**

Privacy Act Statement

The Privacy Act of 1974 (P.L. 93-579) requires that you be given certain information in connection with your submission of the attached form related to a patent application or patent. Accordingly, pursuant to the requirements of the Act, please be advised that: (1) the general authority for the collection of this information is 35 U.S.C. 2(b)(2); (2) furnishing of the information solicited is voluntary; and (3) the principal purpose for which the information is used by the U.S. Patent and Trademark Office is to process and/or examine your submission related to a patent application or patent. If you do not furnish the requested information, the U.S. Patent and Trademark Office may not be able to process and/or examine your submission, which may result in termination of proceedings or abandonment of the application or expiration of the patent.

The information provided by you in this form will be subject to the following routine uses:

1. The information on this form will be treated confidentially to the extent allowed under the Freedom of Information Act (5 U.S.C. 552) and the Privacy Act (5 U.S.C. 552a). Records from this system of records may be disclosed to the Department of Justice to determine whether the Freedom of Information Act requires disclosure of these record s.

2. A record from this system of records may be disclosed, as a routine use, in the course of presenting evidence to a court, magistrate, or administrative tribunal, including disclosures to opposing counsel in the course of settlement negotiations.

3. A record in this system of records may be disclosed, as a routine use, to a Member of Congress submitting a request involving an individual, to whom the record pertains, when the individual has requested assistance from the Member with respect to the subject matter of the record.

4. A record in this system of records may be disclosed, as a routine use, to a contractor of the Agency having need for the information in order to perform a contract. Recipients of information shall be required to comply with the requirements of the Privacy Act of 1974, as amended, pursuant to 5 U.S.C. 552a(m).

5. A record related to an International Application filed under the Patent Cooperation Treaty in this system of records may be disclosed, as a routine use, to the International Bureau of the World Intellectual Property Organization, pursuant to the Patent Cooperation Treaty.

6. A record in this system of records may be disclosed, as a routine use, to another federal agency for purposes of National Security review (35 U.S.C. 181) and for review pursuant to the Atomic Energy Act (42 U.S.C. 218(c)).

7. A record from this system of records may be disclosed, as a routine use, to the Administrator, General Services, or his/her designee, during an inspection of records conducted by GSA as part of that agency's responsibility to recommend improvements in records management practices and programs, under authority of 44 U.S.C. 2904 and 2906. Such disclosure shall be made in accordance with the GSA regulations governing inspection of records for this purpose, and any other relevant (i.e., GSA or Commerce) directive. Such disclosure shall not be used to make determinations about individuals.

8. A record from this system of records may be disclosed, as a routine use, to the public after either publication of the application pursuant to 35 U.S.C. 122(b) or issuance of a patent pursuant to 35 U.S.C. 151. Further, a record may be disclosed, subject to the limitations of 37 CFR 1.14, as a routine use, to the public if the record was filed in an application which became abandoned or in which the proceedings were terminated and which application is referenced by either a published application, an application open to public inspections or an issued patent.

9. A record from this system of records may be disclosed, as a routine use, to a Federal, State, or local law enforcement agency, if the USPTO becomes aware of a violation or potential violation of law or regulation.

UNITED STATES PATENT AND TRADEMARK OFFICE

COMMISSIONER FOR PATENTS
UNITED STATES PATENT AND TRADEMARK OFFICE
WASHINGTON, D.C. 20231
www.uspto.gov

Paper No. 44

Allan Ratner
RATNER & PRESTIA
Suite 301, One Westlakes, Berwyn
P.O. Box 980
Valley Forge, PA 19482-0980

COPY MAILED

SEP 6 2001

OFFICE OF PETITIONS

In re Application of	:	
David B. Smith	:	
Application No. 08/976,440	:	ON PETITION
Filed: November 25, 1997	:	
Attorney Docket No. MUR-3494	:	

This is a decision on the petition under 37 CFR 1.137(b), filed August 27, 2001, to revive the above-identified application.

The petition is **GRANTED**.

This application became abandoned for failure to properly reply to the non-final Office action mailed December 12, 2000. An improper RCE without a submission and accompanied by a three month extension of time was filed June 7, 2001. Accordingly, this application became abandoned on June 13, 2001. A Notice of Abandonment was mailed on July 3, 2001.

The file is being forwarded to Technology Center 3600.

Telephone inquiries concerning this matter may be directed to Lesley Morris at (703) 306-0028.

Edward J. Tannouse
Petitions Attorney
Office of Petitions
Office of the Deputy Commissioner
for Patent Examination Policy

UNITED STATES PATENT AND TRADEMARK OFFICE

Commissioner for Patents
United States Patent and Trademark Office
P.O. Box 1450
Alexandria, VA 22313-1450
www.uspto.gov

Date Mailed : 3-27-06

Patent No.: 5,952,684
Patent Issued : September 14, 1999
Inventor(s) : Masahisa Tashiro
Title: CHIP LAYOUT OF EMICONDUCTOR INTEGRATD CIRCUIT
Docket No.: llZ 106

Re: Request for Certificate of Correction

Consideration has been given your request for the issuance of a certificate of correction for the above-identified patent under the provisions of Rule 1.322.

The alleged error in col. 7, line 17, the words "and third" purported to be in column 7, line 17 cannot be found in the printed patent.

In view of the foregoing, your request is hereby denied. However, further consideration will be given upon receipt of a request for reconsideration directed to Decisions & Certificates of Correction Branch.

Eva James
For Cecelia B. Newman
Certificate of Correction Branch
(703) 308-9390 ext. 124 or ext. 102

Steven M. Rabin
Rabin & Berdo
1101 14th Street N.W., Suite 500
Washington, DC 20005

ej

UNITED STATES PATENT AND TRADEMARK OFFICE

Technology Center 1700.

Mailed: AUG 3 0 2004

rvk
Paper Number:_____

In re application of
John Leiber et al.
Serial No. 08/976,820
Filed: November 25, 1997
For: USE OF AN ADHESIVE TAPE SECTION:

DECISION ON PETITION

This is a response to the "PETITION TO WITHDRAW HOLDING OF ABANDONMENT", filed June 26, 2004. The petition requests that the abandonment, as set forth in the Notice of Abandonment of May 24, 2004, for failure to timely file a proper response to the Decision by the Board of Patent Appeals and Interferences rendered on April 28, 2004 be withdrawn. The petitioner asserts that the abandonment was prematurely issued and applicants filed a Request for Continuous Examination (RCE) on June 28, 2004.

DECISION

The instant request is accepted as a timely petition under 37 C.F.R. 1.181 (no fee). A review of the instant application file indicates that the Notice Of Abandonment of May 24, 2004 was prematurely prepared by the Examiner and mailed, when in fact the applicants had until June 28, 2004 to seek Court review of the Decision. Therefore, when the Notice of Abandonment of May 24, 2004 was mailed the instant application was not in fact abandoned. A review of the USPTO application file indicates that a Request for Continuous Examination (RCE) under 37 CFR 1.114 was filed on June 28, 2004.

Therefore, the abandonment is hereby withdrawn, and the application is returned to

pending status. The case will be forwarded to the Technical Support Staff for entering of the RCE filed June 28, 2004 and then forwarded to the examiner for prompt consideration.

The Petition is **GRANTED**.

JMStone

Jacqueline Stone, Director
Technology Center 1700
Chemical and Materials Engineering

NORRIS, McLAUGHLIN & MARCUS, P.A.
220 EAST 42ND STREET – 30TH FLOOR
NEW YORK, NY 10017

Under the Paperwork Reduction Act of 1995, no persons are required to respond to a collection of information unless it displays valid OMB control number.

PETITION TO ACCEPT UNINTENTIONALLY DELAYED PAYMENT OF MAINTENANCE FEE IN AN EXPIRED PATENT (37 CFR 1.378(c))

Patent Number	Issue Date (YYYY-MM-DD)	Application Number	Filing Date (YYYY-MM-DD)	Docket Number (if applicable)
5953724	1999-09-14	08977366	1997-11-24	1027-006/MMM

CAUTION: Maintenance fee (and surcharge, if any) payment must correctly identify: (1) the patent number and (2) the application number of the actual U.S. application leading to issuance of that patent to ensure the fee(s) is/are associated with the correct patent. 37 CFR 1.366(c) and (d).

SMALL ENTITY
☒ Patentee claims, or has previously claimed, small entity status. See 37 CFR 1.27.

LOSS OF ENTITLEMENT TO SMALL ENTITY STATUS
☐ Patentee is no longer entitled to small entity status. See 37 CFR 1.27(g)

NOT Small Entity		Small Entity	
Fee	Code	Fee	Code
○ 3 ½ year	(1551)	○ 3 ½ year	(2551)
○ 7 ½ year	(1552)	◉ 7 ½ year	(2552)
○ 11 ½ year	(1553)	○ 11 ½ year	(2553)

SURCHARGE
The surcharge required by 37 CFR 1.20(i)(2) (Fee Code 1558) must be paid as a condition of accepting unintentionally delayed payment of the maintenance fee.

MAINTENANCE FEE (37 CFR 1.20(e)-(g))
The appropriate maintenance fee must be submitted with this petition.

STATEMENT
THE UNDERSIGNED CERTIFIES THAT THE DELAY IN PAYMENT OF THE MAINTENANCE FEE TO THIS PATENT WAS UNINTENTIONAL

PETITIONER(S) REQUEST THAT THE DELAYED PAYMENT OF THE MAINTENANCE FEE BE ACCEPTED AND THE PATENT REINSTATED

THIS PORTION MUST BE COMPLETED BY THE SIGNATORY OR SIGNATORIES

37 CFR 1.378(d) states: "Any petition under this section must be signed by an attorney or agent registered to practice before the Patent and Trademark Office, or by the patentee, the assignee, or other party in interest."

I certify, in accordance with 37 CFR 1.4(d)(4) that I am

◉ An attorney or agent registered to practice before the Patent and Trademark Office

○ A sole patentee

○ A joint patentee; I certify that I am authorized to sign this submission on behalf of all the other patentees.

○ A joint patentee; all of whom are signing this e-petition

○ The assignee of record of the entire interest

Patent Practitioner			
A signature of the applicant or representative is required in accordance with 37 CFR 1.33 and 10.18. Please see 37 CFR 1.4(d) for the form of the signature			
Signature	/Mark M. Meininger/	Date (YYYY-MM-DD)	2008-12-19
Name	Mark M. Meininger	Registration Number	32428

This collection of information is required by 37 CFR 1.378(c). The information is required to obtain or retain a benefit by the public which is to file (and by the USPTO to process) an application. Confidentiality is governed by 35 U.S.C. 122 and 37 CFR 1.11 and 1.14. This collection is estimated to take 1 hour to complete, including gathering, preparing, and submitting the completed application form to the USPTO. Time will vary depending upon the individual case. Any comments on the amount of time you require to complete this form and/ or suggestions for reducing this burden, should be sent to the Chief Information Officer, U.S. Patent and Trademark Office, U.S. Department of Commerce, P.O. Box 1450, Alexandria, VA 22313-1450. DO NOT SEND FEES OR COMPLETED FORMS TO THIS ADDRESS. **This form can only be used when in conjunction with EFS-Web. If this form is mailed to the USPTO, it may cause delays in reinstating the patent.**

Privacy Act Statement

The Privacy Act of 1974 (P.L. 93-579) requires that you be given certain information in connection with your submission of the attached form related to a patent application or patent. Accordingly, pursuant to the requirements of the Act, please be advised that: (1) the general authority for the collection of this information is 35 U.S.C. 2(b)(2); (2) furnishing of the information solicited is voluntary; and (3) the principal purpose for which the information is used by the U.S. Patent and Trademark Office is to process and/or examine your submission related to a patent application or patent. If you do not furnish the requested information, the U.S. Patent and Trademark Office may not be able to process and/or examine your submission, which may result in termination of proceedings or abandonment of the application or expiration of the patent.

The information provided by you in this form will be subject to the following routine uses:

1. The information on this form will be treated confidentially to the extent allowed under the Freedom of Information Act (5 U.S.C. 552) and the Privacy Act (5 U.S.C. 552a). Records from this system of records may be disclosed to the Department of Justice to determine whether the Freedom of Information Act requires disclosure of these record s.

2. A record from this system of records may be disclosed, as a routine use, in the course of presenting evidence to a court, magistrate, or administrative tribunal, including disclosures to opposing counsel in the course of settlement negotiations.

3. A record in this system of records may be disclosed, as a routine use, to a Member of Congress submitting a request involving an individual, to whom the record pertains, when the individual has requested assistance from the Member with respect to the subject matter of the record.

4. A record in this system of records may be disclosed, as a routine use, to a contractor of the Agency having need for the information in order to perform a contract. Recipients of information shall be required to comply with the requirements of the Privacy Act of 1974, as amended, pursuant to 5 U.S.C. 552a(m).

5. A record related to an International Application filed under the Patent Cooperation Treaty in this system of records may be disclosed, as a routine use, to the International Bureau of the World Intellectual Property Organization, pursuant to the Patent Cooperation Treaty.

6. A record in this system of records may be disclosed, as a routine use, to another federal agency for purposes of National Security review (35 U.S.C. 181) and for review pursuant to the Atomic Energy Act (42 U.S.C. 218(c)).

7. A record from this system of records may be disclosed, as a routine use, to the Administrator, General Services, or his/her designee, during an inspection of records conducted by GSA as part of that agency's responsibility to recommend improvements in records management practices and programs, under authority of 44 U.S.C. 2904 and 2906. Such disclosure shall be made in accordance with the GSA regulations governing inspection of records for this purpose, and any other relevant (i.e., GSA or Commerce) directive. Such disclosure shall not be used to make determinations about individuals.

8. A record from this system of records may be disclosed, as a routine use, to the public after either publication of the application pursuant to 35 U.S.C. 122(b) or issuance of a patent pursuant to 35 U.S.C. 151. Further, a record may be disclosed, subject to the limitations of 37 CFR 1.14, as a routine use, to the public if the record was filed in an application which became abandoned or in which the proceedings were terminated and which application is referenced by either a published application, an application open to public inspections or an issued patent.

9. A record from this system of records may be disclosed, as a routine use, to a Federal, State, or local law enforcement agency, if the USPTO becomes aware of a violation or potential violation of law or regulation.

UNITED STATES PATENT AND TRADEMARK OFFICE

Commissioner for Patents
United States Patent and Trademark Office
P.O. Box 1450
Alexandria, VA 22313-1450
www.uspto.gov

In re Patent No. 5953724
Issue Date: September 14,1999
Application No. 08977366
Filed: November 24,1997
Attorney Docket No. 1027-006/MMM

:
:DECISION GRANTING PETITION
:UNDER 37 CFR 1.378(c)
:

This is a decision on the electronic petition, filed December 19,2008 ,under 37 CFR 1.378(c) to accept the unintentionally delayed payment of the 7.5 year maintenance fee for the above-identified patent.

The petition is **GRANTED**.

The maintenance fee is accepted, and the above-identified patent reinstated as of December 19,2008 . This decision also constitutes notice that the fee has been accepted. An electronic copy of the petition and this decision has been created as an entry in the Image File Wrapper. Nevertheless, petitioner should print and retain an independent copy.

Telephone inquiries related to this electronic decision should be directed to the Electronic Business Center at 1-866-217-9197.

UNITED STATES PATENT AND TRADEMARK OFFICE

Commissioner for Patents
United States Patent and Trademark Office
P.O. Box 1450
Alexandria, VA 22313-1450
www.uspto.gov

Paper 22

PETER J. SU
HAYNES BEFFEL & WOLFELD LLP
P.O. BOX 366; 751 KELLY STREET
HALF MOON BAY, CA 94019

COPY MAILED

JAN 25 2007

OFFICE OF PETITIONS

In re Patent No. 6,320,489 :
Issued: November 20, 2001 :
Application No. 08/977,400 : ON PETITION
Filed: November 24, 1997 :
Attorney Docket No. HALO 100-4 :

This is a decision on the petition filed December 8, 2006 under 37 CFR 1.28, requesting acceptance of a fee deficiency submission and loss of small entity status.

On September 1, 1998, the Court of Appeals for the Federal Circuit held that 37 CFR 1.28(c) is the sole provision governing the time for correction of the erroneous payment of the issue fee as a small entity. See DH Technology v. Synergystex International, Inc.. 154 F.33d 1333, 47 USPQ2d 1865 (Fed. Cir. Sept. 1, 1998).

The Office no longer investigates or rejects original or reissue applications under 37 CFR 1.56. 1098 Off. Gaz. Pat. Office 502 (January 3, 1989). Therefore nothing in this Notice is intended to imply that an investigation was done.

Your fee deficiency submission in the amount of $515.00 ($450 for the maintenance fee and $65 for the surcharge) has been charged to petitioner's credit card and is hereby accepted under 37 CFR 1.28. In view thereof, the petition is **GRANTED**. Status as a small entity has also been removed.

Additionally, there is no indication that petitioner herein was ever empowered to prosecute the instant application. If petitioner desires to receive future correspondence regarding this application, the appropriate power of attorney documentation must be submitted. A courtesy copy of this decision will be mailed to petitioner. However, all future correspondence will be directed to the address of record until such time as appropriate instructions are received to the contrary.

Inquiries related to this communication should be directed to the Office of Petitions Staff at (571) 272-3282.

Patricia Faison-Ball

Patricia Faison-Ball
Senior Petitions Attorney
Office of Petitions

Under the Paperwork Reduction Act of 1995, no persons are required to respond to a collection of information unless it displays valid OMB control number.

PETITION TO ACCEPT UNINTENTIONALLY DELAYED PAYMENT OF MAINTENANCE FEE IN AN EXPIRED PATENT (37 CFR 1.378(c))

Patent Number	Issue Date (YYYY-MM-DD)	Application Number	Filing Date (YYYY-MM-DD)	Docket Number (if applicable)
6297721	2001-10-02	08977407	1997-11-24	HALO 100-3

CAUTION: Maintenance fee (and surcharge, if any) payment must correctly identify: (1) the patent number and (2) the application number of the actual U.S. application leading to issuance of that patent to ensure the fee(s) is/are associated with the correct patent. 37 CFR 1.366(c) and (d).

SMALL ENTITY
☐ Patentee claims, or has previously claimed, small entity status. See 37 CFR 1.27.

LOSS OF ENTITLEMENT TO SMALL ENTITY STATUS
☒ Patentee is no longer entitled to small entity status. See 37 CFR 1.27(g)

NOT Small Entity		Small Entity	
Fee	Code	Fee	Code
◉ 3 ½ year	(1551)	○ 3 ½ year	(2551)
○ 7 ½ year	(1552)	○ 7 ½ year	(2552)
○ 11 ½ year	(1553)	○ 11 ½ year	(2553)

SURCHARGE
The surcharge required by 37 CFR 1.20(i)(2) (Fee Code 1558) must be paid as a condition of accepting unintentionally delayed payment of the maintenance fee.

MAINTENANCE FEE (37 CFR 1.20(e)-(g))
The appropriate maintenance fee must be submitted with this petition.

STATEMENT
THE UNDERSIGNED CERTIFIES THAT THE DELAY IN PAYMENT OF THE MAINTENANCE FEE TO THIS PATENT WAS UNINTENTIONAL

PETITIONER(S) REQUEST THAT THE DELAYED PAYMENT OF THE MAINTENANCE FEE BE ACCEPTED AND THE PATENT REINSTATED

THIS PORTION MUST BE COMPLETED BY THE SIGNATORY OR SIGNATORIES

37 CFR 1.378(d) states: "Any petition under this section must be signed by an attorney or agent registered to practice before the Patent and Trademark Office, or by the patentee, the assignee, or other party in interest."

I certify, in accordance with 37 CFR 1.4(d)(4) that I am

◉ An attorney or agent registered to practice before the Patent and Trademark Office

○ A sole patentee

○ A joint patentee; I certify that I am authorized to sign this submission on behalf of all the other patentees.

○ A joint patentee; all of whom are signing this e-petition

○ The assignee of record of the entire interest

Patent Practitioner			
A signature of the applicant or representative is required in accordance with 37 CFR 1.33 and 10.18. Please see 37 CFR 1.4(d) for the form of the signature			
Signature	/Peter J. Su/	Date (YYYY-MM-DD)	2006-12-06
Name	Peter J. Su	Registration Number	43939

This collection of information is required by 37 CFR 1.378(c). The information is required to obtain or retain a benefit by the public which is to file (and by the USPTO to process) an application. Confidentiality is governed by 35 U.S.C. 122 and 37 CFR 1.11 and 1.14. This collection is estimated to take 1 hour to complete, including gathering, preparing, and submitting the completed application form to the USPTO. Time will vary depending upon the individual case. Any comments on the amount of time you require to complete this form and/ or suggestions for reducing this burden, should be sent to the Chief Information Officer, U.S. Patent and Trademark Office, U.S. Department of Commerce, P.O. Box 1450, Alexandria, VA 22313-1450. DO NOT SEND FEES OR COMPLETED FORMS TO THIS ADDRESS. **This form can only be used when in conjunction with EFS-Web. If this form is mailed to the USPTO, it may cause delays in reinstating the patent.**

Privacy Act Statement

The Privacy Act of 1974 (P.L. 93-579) requires that you be given certain information in connection with your submission of the attached form related to a patent application or patent. Accordingly, pursuant to the requirements of the Act, please be advised that: (1) the general authority for the collection of this information is 35 U.S.C. 2(b)(2); (2) furnishing of the information solicited is voluntary; and (3) the principal purpose for which the information is used by the U.S. Patent and Trademark Office is to process and/or examine your submission related to a patent application or patent. If you do not furnish the requested information, the U.S. Patent and Trademark Office may not be able to process and/or examine your submission, which may result in termination of proceedings or abandonment of the application or expiration of the patent.

The information provided by you in this form will be subject to the following routine uses:

1. The information on this form will be treated confidentially to the extent allowed under the Freedom of Information Act (5 U.S.C. 552) and the Privacy Act (5 U.S.C. 552a). Records from this system of records may be disclosed to the Department of Justice to determine whether the Freedom of Information Act requires disclosure of these record s.

2. A record from this system of records may be disclosed, as a routine use, in the course of presenting evidence to a court, magistrate, or administrative tribunal, including disclosures to opposing counsel in the course of settlement negotiations.

3. A record in this system of records may be disclosed, as a routine use, to a Member of Congress submitting a request involving an individual, to whom the record pertains, when the individual has requested assistance from the Member with respect to the subject matter of the record.

4. A record in this system of records may be disclosed, as a routine use, to a contractor of the Agency having need for the information in order to perform a contract. Recipients of information shall be required to comply with the requirements of the Privacy Act of 1974, as amended, pursuant to 5 U.S.C. 552a(m).

5. A record related to an International Application filed under the Patent Cooperation Treaty in this system of records may be disclosed, as a routine use, to the International Bureau of the World Intellectual Property Organization, pursuant to the Patent Cooperation Treaty.

6. A record in this system of records may be disclosed, as a routine use, to another federal agency for purposes of National Security review (35 U.S.C. 181) and for review pursuant to the Atomic Energy Act (42 U.S.C. 218(c)).

7. A record from this system of records may be disclosed, as a routine use, to the Administrator, General Services, or his/her designee, during an inspection of records conducted by GSA as part of that agency's responsibility to recommend improvements in records management practices and programs, under authority of 44 U.S.C. 2904 and 2906. Such disclosure shall be made in accordance with the GSA regulations governing inspection of records for this purpose, and any other relevant (i.e., GSA or Commerce) directive. Such disclosure shall not be used to make determinations about individuals.

8. A record from this system of records may be disclosed, as a routine use, to the public after either publication of the application pursuant to 35 U.S.C. 122(b) or issuance of a patent pursuant to 35 U.S.C. 151. Further, a record may be disclosed, subject to the limitations of 37 CFR 1.14, as a routine use, to the public if the record was filed in an application which became abandoned or in which the proceedings were terminated and which application is referenced by either a published application, an application open to public inspections or an issued patent.

9. A record from this system of records may be disclosed, as a routine use, to a Federal, State, or local law enforcement agency, if the USPTO becomes aware of a violation or potential violation of law or regulation.

UNITED STATES PATENT AND TRADEMARK OFFICE

Commissioner for Patents
United States Patent and Trademark Office
P.O. Box 1450
Alexandria, VA 22313-1450
www.uspto.gov

In re Patent No. 6297721
Issue Date: October 2,2001
Application No. 08977407
Filed: November 24,1997
Attorney Docket No.

:

:DECISION GRANTING PETITION
:UNDER 37 CFR 1.378(c)

:

This is a decision on the electronic petition, filed December 6,2006 ,under 37 CFR 1.378(c) to accept the unintentionally delayed payment of the 3.5 year maintenance fee for the above-identified patent.

The petition is GRANTED.

The maintenance fee is accepted, and the above-identified patent reinstated as of December 6,2006 . This decision also constitutes notice that the fee has been accepted. An electronic copy of the petition and this decision has been created as an entry in an Image File Wrapper. Nevertheless, petitioner should print and retain an independent copy

Telephone inquires related to this electronic decision should be directed to the Electronic Business Center at 1-866-217-9197.

UNITED STATES PATENT AND TRADEMARK OFFICE

Commissioner for Patents
United States Patent and Trademark Office
P.O. Box 1450
Alexandria, VA 22313-1450
www.uspto.gov

MORGAN, LEWIS & BOCKIUS, LLP
ONE MARKET SPEAR STREET TOWER
SAN FRANCISCO CA 94105

MAILED

MAR 18 2009

OFFICE OF PETITIONS

In re Patent No.: RE39,543 :
Issue Date: 3 April, 2007 :
Application No. 08/977,644 : DECISION
Filed: 24 November, 1997 :
Attorney Docket No. 67702-5002 / 04-US

This is a decision on the petition, filed on 10 June, 2008, properly considered as a request under 37 C.F.R. §1.377 to accept and record a maintenance fee for the above-identified patent.

The petition is **GRANTED**, and the third maintenance fee and surcharge are accepted pursuant to the tender on 14 March, 2008 (*see*: Notice of Non-Acceptance).

The instant patent issued as a reissue on 3 April, 2007, with the original issue date of the underlying patent (No. 5,536,501) on16 July, 1996.

The third maintenance fee could have been paid with surcharge from 17 January, 2008, through 16 July, 2008, and the record (*inter alia*, a copy of the submission and of the Notice of Non-Acceptance) evidences that payment was timely tendered by Petitioner and received by the Office, and thereafter the Office failed to consider the submission in the context of the 4 November, 2005, decision granting acceptance of an unintentionally delayed payment of the maintenance fee as to Patent No. 5,536,501.

This, it appears that the Office failed to accept and credit properly the fee to the instant patent.

Petitioner has adequately demonstrated that the Office may accept and record the third maintenance fee payment for the above-noted patent pursuant to 37 C.F.R. §1.377.

Accordingly, the petition under 37 C.F.R. §1.377 is **granted**; the petition fee is waived *sua sponte*–and it appears that it was not charged. Should Petitioner later find that it was charged, Petitioner may file with the Office of Finance a request for refund with a copy of this decision.

This file is being returned to the IFW Files Repository.

Telephone inquiries regarding this decision may be directed to the undersigned at (571) 272-3214—it is noted, however, that all practice before the Office is in writing (see: 37 C.F.R. §1.2[1]) and the proper authority for action on any matter in this regard are the statutes (35 U.S.C.), regulations (37 C.F.R.) and the commentary on policy (MPEP). Therefore, no telephone discussion may be controlling or considered authority for Petitioner's action(s).

/John J. Gillon, Jr./
John J. Gillon, Jr.
Senior Attorney
Office of Petitions

[1] The regulations at 37 C.F.R. §1.2 provide:

§1.2 Business to be transacted in writing.
All business with the Patent and Trademark Office should be transacted in writing. The personal attendance of applicants or their attorneys or agents at the Patent and Trademark Office is unnecessary. The action of the Patent and Trademark Office will be based exclusively on the written record in the Office. No attention will be paid to any alleged oral promise, stipulation, or understanding in relation to which there is disagreement or doubt.

UNITED STATES PATENT AND TRADEMARK OFFICE

Commissioner for Patents
United States Patent and Trademark Office
P.O. Box 1450
Alexandria, VA 22313-1450
www.uspto.gov

STEINBERG & RASKIN, P.C.
1140 AVENUE OF THE AMERICAS, 15TH FLOOR
NEW YORK, NY 10036-5803

COPY MAILED

FEB 27 2008

OFFICE OF PETITIONS

In re Patent No. 6,544,387 :
Issue Date: April 8, 2003 :
Application No. 08/977,973 : ON PETITION
Filed: November 25, 1997 :
Attorney Docket No. 9901139 :

This is a decision on the petition filed August 19, 2004 (certificate of mailing May 13, 2003), which is being treated as a petition under 37 CFR 3.81(b)[1] to add the assignees' name on the front page of the above-identified patent by way of a Certificate of Correction.

The petition is **granted.**

Telephone inquiries concerning this matter may be directed to the undersigned at (571) 272-3210. Any questions concerning the issuance of the Certificate of Correction should be directed to the Certificates of Correction Branch at (703) 305-8309.

This application is being forwarded to the Certificates of Correction Branch for issuance of the requested Certificate of Correction.

Irvin Dingle
Petitions Examiner
Office of Petitions

[1] See Official Gazette of June 22, 2004

UNITED STATES PATENT AND TRADEMARK OFFICE

Commissioner for Patents
United States Patent and Trademark Office
P.O. Box 1450
Alexandria, VA 22313-1450
www.uspto.gov

In re Patent No. 6154496
Issue Date: November 28,2000
Application No. 08977989
Filed: November 25,1997
Attorney Docket No. PHA23310

:
:DECISION GRANTING PETITION
:UNDER 37 CFR 1.378(c)
:

This is a decision on the electronic petition, filed May 27,2009 ,under 37 CFR 1.378(c) to accept the unintentionally delayed payment of the 7.5 year maintenance fee for the above-identified patent.

The petition is **GRANTED**.

The maintenance fee is accepted, and the above-identified patent reinstated as of May 27,2009 .
This decision also constitutes notice that the fee has been accepted. An electronic copy of the petition and this decision has been created as an entry in the Image File Wrapper. Nevertheless, petitioner should print and retain an independent copy.

Telephone inquiries related to this electronic decision should be directed to the Electronic Business Center at 1-866-217-9197.

PTO/SB/66 (03-09)
Approved for use through 03/31/2012. OMB 0651-0016
U.S. Patent and Trademark Office: U.S. DEPARTMENT OF COMMERCE
Under the Paperwork Reduction Act of 1995, no persons are required to respond to a collection of information unless it displays valid OMB control number.

PETITION TO ACCEPT UNINTENTIONALLY DELAYED PAYMENT OF MAINTENANCE FEE IN AN EXPIRED PATENT (37 CFR 1.378(c))

Patent Number	Issue Date (YYYY-MM-DD)	Application Number	Filing Date (YYYY-MM-DD)	Docket Number (if applicable)
6154496	2000-11-28	08977989	1997-11-25	

CAUTION: Maintenance fee (and surcharge, if any) payment must correctly identify: (1) the patent number and (2) the application number of the actual U.S. application leading to issuance of that patent to ensure the fee(s) is/are associated with the correct patent. 37 CFR 1.366(c) and (d).

SMALL ENTITY

☐ Patentee claims, or has previously claimed, small entity status. See 37 CFR 1.27.

LOSS OF ENTITLEMENT TO SMALL ENTITY STATUS

☐ Patentee is no longer entitled to small entity status. See 37 CFR 1.27(g)

NOT Small Entity			Small Entity		
	Fee	Code		Fee	Code
○	3 ½ year	(1551)	○	3 ½ year	(2551)
◉	7 ½ year	(1552)	○	7 ½ year	(2552)
○	11 ½ year	(1553)	○	11 ½ year	(2553)

SURCHARGE

The surcharge required by 37 CFR 1.20(i)(2) (Fee Code 1558) must be paid as a condition of accepting unintentionally delayed payment of the maintenance fee.

MAINTENANCE FEE (37 CFR 1.20(e)-(g))

The appropriate maintenance fee must be submitted with this petition.

STATEMENT

THE UNDERSIGNED CERTIFIES THAT THE DELAY IN PAYMENT OF THE MAINTENANCE FEE TO THIS PATENT WAS UNINTENTIONAL

PETITIONER(S) REQUEST THAT THE DELAYED PAYMENT OF THE MAINTENANCE FEE BE ACCEPTED AND THE PATENT REINSTATED

THIS PORTION MUST BE COMPLETED BY THE SIGNATORY OR SIGNATORIES

37 CFR 1.378(d) states: "Any petition under this section must be signed by an attorney or agent registered to practice before the Patent and Trademark Office, or by the patentee, the assignee, or other party in interest."

I certify, in accordance with 37 CFR 1.4(d)(4) that I am

◉ An attorney or agent registered to practice before the Patent and Trademark Office

○ A sole patentee

○ A joint patentee; I certify that I am authorized to sign this submission on behalf of all the other patentees.

○ A joint patentee; all of whom are signing this e-petition

○ The assignee of record of the entire interest

Patent Practitioner			
A signature of the applicant or representative is required in accordance with 37 CFR 1.33 and 10.18. Please see 37 CFR 1.4(d) for the form of the signature			
Signature	/Michael E Marion/	Date (YYYY-MM-DD)	2009-05-18
Name	Michael E. Marion	Registration Number	32266

This collection of information is required by 37 CFR 1.378(c). The information is required to obtain or retain a benefit by the public which is to file (and by the USPTO to process) an application. Confidentiality is governed by 35 U.S.C. 122 and 37 CFR 1.11 and 1.14. This collection is estimated to take 1 hour to complete, including gathering, preparing, and submitting the completed application form to the USPTO. Time will vary depending upon the individual case. Any comments on the amount of time you require to complete this form and/ or suggestions for reducing this burden, should be sent to the Chief Information Officer, U.S. Patent and Trademark Office, U.S. Department of Commerce, P.O. Box 1450, Alexandria, VA 22313-1450. DO NOT SEND FEES OR COMPLETED FORMS TO THIS ADDRESS. **This form can only be used when in conjunction with EFS-Web. If this form is mailed to the USPTO, it may cause delays in reinstating the patent.**

Privacy Act Statement

The Privacy Act of 1974 (P.L. 93-579) requires that you be given certain information in connection with your submission of the attached form related to a patent application or patent. Accordingly, pursuant to the requirements of the Act, please be advised that: (1) the general authority for the collection of this information is 35 U.S.C. 2(b)(2); (2) furnishing of the information solicited is voluntary; and (3) the principal purpose for which the information is used by the U.S. Patent and Trademark Office is to process and/or examine your submission related to a patent application or patent. If you do not furnish the requested information, the U.S. Patent and Trademark Office may not be able to process and/or examine your submission, which may result in termination of proceedings or abandonment of the application or expiration of the patent.

The information provided by you in this form will be subject to the following routine uses:

1. The information on this form will be treated confidentially to the extent allowed under the Freedom of Information Act (5 U.S.C. 552) and the Privacy Act (5 U.S.C. 552a). Records from this system of records may be disclosed to the Department of Justice to determine whether the Freedom of Information Act requires disclosure of these records.

2. A record from this system of records may be disclosed, as a routine use, in the course of presenting evidence to a court, magistrate, or administrative tribunal, including disclosures to opposing counsel in the course of settlement negotiations.

3. A record in this system of records may be disclosed, as a routine use, to a Member of Congress submitting a request involving an individual, to whom the record pertains, when the individual has requested assistance from the Member with respect to the subject matter of the record.

4. A record in this system of records may be disclosed, as a routine use, to a contractor of the Agency having need for the information in order to perform a contract. Recipients of information shall be required to comply with the requirements of the Privacy Act of 1974, as amended, pursuant to 5 U.S.C. 552a(m).

5. A record related to an International Application filed under the Patent Cooperation Treaty in this system of records may be disclosed, as a routine use, to the International Bureau of the World Intellectual Property Organization, pursuant to the Patent Cooperation Treaty.

6. A record in this system of records may be disclosed, as a routine use, to another federal agency for purposes of National Security review (35 U.S.C. 181) and for review pursuant to the Atomic Energy Act (42 U.S.C. 218(c)).

7. A record from this system of records may be disclosed, as a routine use, to the Administrator, General Services, or his/her designee, during an inspection of records conducted by GSA as part of that agency's responsibility to recommend improvements in records management practices and programs, under authority of 44 U.S.C. 2904 and 2906. Such disclosure shall be made in accordance with the GSA regulations governing inspection of records for this purpose, and any other relevant (i.e., GSA or Commerce) directive. Such disclosure shall not be used to make determinations about individuals.

8. A record from this system of records may be disclosed, as a routine use, to the public after either publication of the application pursuant to 35 U.S.C. 122(b) or issuance of a patent pursuant to 35 U.S.C. 151. Further, a record may be disclosed, subject to the limitations of 37 CFR 1.14, as a routine use, to the public if the record was filed in an application which became abandoned or in which the proceedings were terminated and which application is referenced by either a published application, an application open to public inspections or an issued patent.

9. A record from this system of records may be disclosed, as a routine use, to a Federal, State, or local law enforcement agency, if the USPTO becomes aware of a violation or potential violation of law or regulation.

UNITED STATES PATENT AND TRADEMARK OFFICE

Commissioner for Patents
United States Patent and Trademark Office
P.O. Box 1450
Alexandria, VA 22313-1450
www.uspto.gov

In re Patent No. 6016740
Issue Date: January 25,2000
Application No. 08977997
Filed: November 25,1997
Attorney Docket No.

:
:DECISION GRANTING PETITION
:UNDER 37 CFR 1.378(c)
:

This is a decision on the electronic petition, filed April 14,2008 ,under 37 CFR 1.378(c) to accept the unintentionally delayed payment of the 7.5 year maintenance fee for the above-identified patent.

The petition is GRANTED.

The maintenance fee is accepted, and the above-identified patent reinstated as of April 14,2008 . This decision also constitutes notice that the fee has been accepted. An electronic copy of the petition and this decision has been created as an entry in an Image File Wrapper. Nevertheless, petitioner should print and retain an independent copy

Telephone inquires related to this electronic decision should be directed to the Electronic Business Center at 1-866-217-9197.

Under the Paperwork Reduction Act of 1995, no persons are required to respond to a collection of information unless it displays valid OMB control number.

PETITION TO ACCEPT UNINTENTIONALLY DELAYED PAYMENT OF MAINTENANCE FEE IN AN EXPIRED PATENT (37 CFR 1.378(c))

Patent Number	Issue Date (YYYY-MM-DD)	Application Number	Filing Date (YYYY-MM-DD)	Docket Number (if applicable)
6,016,740	2000-01-25	08/977,997	1997-11-25	29929/38327

CAUTION: Maintenance fee (and surcharge, if any) payment must correctly identify: (1) the patent number and (2) the application number of the actual U.S. application leading to issuance of that patent to ensure the fee(s) is/are associated with the correct patent. 37 CFR 1.366(c) and (d).

SMALL ENTITY
☒ Patentee claims, or has previously claimed, small entity status. See 37 CFR 1.27.

LOSS OF ENTITLEMENT TO SMALL ENTITY STATUS
☐ Patentee is no longer entitled to small entity status. See 37 CFR 1.27(g)

NOT Small Entity		Small Entity	
Fee	Code	Fee	Code
○ 3 ½ year	(1551)	○ 3 ½ year	(2551)
○ 7 ½ year	(1552)	◉ 7 ½ year	(2552)
○ 11 ½ year	(1553)	○ 11 ½ year	(2553)

SURCHARGE
The surcharge required by 37 CFR 1.20(i)(2) (Fee Code 1558) must be paid as a condition of accepting unintentionally delayed payment of the maintenance fee.

MAINTENANCE FEE (37 CFR 1.20(e)-(g))
The appropriate maintenance fee must be submitted with this petition.

STATEMENT
THE UNDERSIGNED CERTIFIES THAT THE DELAY IN PAYMENT OF THE MAINTENANCE FEE TO THIS PATENT WAS UNINTENTIONAL

PETITIONER(S) REQUEST THAT THE DELAYED PAYMENT OF THE MAINTENANCE FEE BE ACCEPTED AND THE PATENT REINSTATED

THIS PORTION MUST BE COMPLETED BY THE SIGNATORY OR SIGNATORIES

37 CFR 1.378(d) states: "Any petition under this section must be signed by an attorney or agent registered to practice before the Patent and Trademark Office, or by the patentee, the assignee, or other party in interest."

I certify, in accordance with 37 CFR 1.4(d)(4) that I am

◉ An attorney or agent registered to practice before the Patent and Trademark Office

○ A sole patentee

○ A joint patentee; I certify that I am authorized to sign this submission on behalf of all the other patentees.

○ A joint patentee; all of whom are signing this e-petition

○ The assignee of record of the entire interest

Patent Practitioner			
A signature of the applicant or representative is required in accordance with 37 CFR 1.33 and 10.18. Please see 37 CFR 1.4(d) for the form of the signature			
Signature	/James P. Zeller/	Date (YYYY-MM-DD)	2008-04-14
Name	James P. Zeller	Registration Number	28491

This collection of information is required by 37 CFR 1.378(c). The information is required to obtain or retain a benefit by the public which is to file (and by the USPTO to process) an application. Confidentiality is governed by 35 U.S.C. 122 and 37 CFR 1.11 and 1.14. This collection is estimated to take 1 hour to complete, including gathering, preparing, and submitting the completed application form to the USPTO. Time will vary depending upon the individual case. Any comments on the amount of time you require to complete this form and/ or suggestions for reducing this burden, should be sent to the Chief Information Officer, U.S. Patent and Trademark Office, U.S. Department of Commerce, P.O. Box 1450, Alexandria, VA 22313-1450. DO NOT SEND FEES OR COMPLETED FORMS TO THIS ADDRESS. **This form can only be used when in conjunction with EFS-Web. If this form is mailed to the USPTO, it may cause delays in reinstating the patent.**

Privacy Act Statement

The Privacy Act of 1974 (P.L. 93-579) requires that you be given certain information in connection with your submission of the attached form related to a patent application or patent. Accordingly, pursuant to the requirements of the Act, please be advised that: (1) the general authority for the collection of this information is 35 U.S.C. 2(b)(2); (2) furnishing of the information solicited is voluntary; and (3) the principal purpose for which the information is used by the U.S. Patent and Trademark Office is to process and/or examine your submission related to a patent application or patent. If you do not furnish the requested information, the U.S. Patent and Trademark Office may not be able to process and/or examine your submission, which may result in termination of proceedings or abandonment of the application or expiration of the patent.

The information provided by you in this form will be subject to the following routine uses:

1. The information on this form will be treated confidentially to the extent allowed under the Freedom of Information Act (5 U.S.C. 552) and the Privacy Act (5 U.S.C. 552a). Records from this system of records may be disclosed to the Department of Justice to determine whether the Freedom of Information Act requires disclosure of these record s.

2. A record from this system of records may be disclosed, as a routine use, in the course of presenting evidence to a court, magistrate, or administrative tribunal, including disclosures to opposing counsel in the course of settlement negotiations.

3. A record in this system of records may be disclosed, as a routine use, to a Member of Congress submitting a request involving an individual, to whom the record pertains, when the individual has requested assistance from the Member with respect to the subject matter of the record.

4. A record in this system of records may be disclosed, as a routine use, to a contractor of the Agency having need for the information in order to perform a contract. Recipients of information shall be required to comply with the requirements of the Privacy Act of 1974, as amended, pursuant to 5 U.S.C. 552a(m).

5. A record related to an International Application filed under the Patent Cooperation Treaty in this system of records may be disclosed, as a routine use, to the International Bureau of the World Intellectual Property Organization, pursuant to the Patent Cooperation Treaty.

6. A record in this system of records may be disclosed, as a routine use, to another federal agency for purposes of National Security review (35 U.S.C. 181) and for review pursuant to the Atomic Energy Act (42 U.S.C. 218(c)).

7. A record from this system of records may be disclosed, as a routine use, to the Administrator, General Services, or his/her designee, during an inspection of records conducted by GSA as part of that agency's responsibility to recommend improvements in records management practices and programs, under authority of 44 U.S.C. 2904 and 2906. Such disclosure shall be made in accordance with the GSA regulations governing inspection of records for this purpose, and any other relevant (i.e., GSA or Commerce) directive. Such disclosure shall not be used to make determinations about individuals.

8. A record from this system of records may be disclosed, as a routine use, to the public after either publication of the application pursuant to 35 U.S.C. 122(b) or issuance of a patent pursuant to 35 U.S.C. 151. Further, a record may be disclosed, subject to the limitations of 37 CFR 1.14, as a routine use, to the public if the record was filed in an application which became abandoned or in which the proceedings were terminated and which application is referenced by either a published application, an application open to public inspections or an issued patent.

9. A record from this system of records may be disclosed, as a routine use, to a Federal, State, or local law enforcement agency, if the USPTO becomes aware of a violation or potential violation of law or regulation.

UNITED STATES PATENT AND TRADEMARK OFFICE

Commissioner for Patents
United States Patent and Trademark Office
P.O. Box 1450
Alexandria, VA 22313-1450
www.uspto.gov

LAW OFFICES OF JONATHAN ALAN QUINE
P.O. BOX 458
ALAMEDA, CA 94501

COPY MAILED
MAY 17 2006
OFFICE OF PETITIONS

In re Application of	:	
Benz et al.	:	
Application No. 08/978,217	:	
Filed: November 25, 1997	:	ON PETITION
Attorney Docket Number:	:	
02307E-07111	:	

This is a decision on the Petition to Revive Unintentionally Abandoned Application under 37 CFR 1.137(b), filed April 3, 2006.

The above-identified application became abandoned for failure to timely and properly reply to the final Office action, mailed September 1, 2005. The Office action set a three (3) month period for reply. No reply having been received, the application became abandoned on December 2, 2005. A Notice of Abandonment was mailed on May 10, 2006.

With the instant petition, Applicant has filed an Amendment and the appropriate responses to place the application in condition for allowance.

The petition is hereby **granted**.

The address on the petition is different from the address of record. If Petitioner desires to receive further correspondence with respect to this application, a change of correspondence address must be filed. A courtesy copy of this Decision is being forwarded to Petitioner at the address appearing on the petition; however, all future correspondence will be sent to address of record until instructions to the contrary are received.

This application is being referred to Technology Center 1642 for processing of the Amendment in due course.

Telephone inquiries related to this decision may be directed to the undersigned at (571) 272-3232.

Derek L. Woods
Attorney
Office of Petitions

Cc: TOM HUNTER
PO BOX 1450
ALAMEDA, CA 94501

UNITED STATES PATENT AND TRADEMARK OFFICE

COMMISSIONER FOR PATENTS
UNITED STATES PATENT AND TRADEMARK OFFICE
WASHINGTON, D.C. 20231
www.uspto.gov

Paper No. 20

BARRY EVANS
WHITMAN BREED ABBOTT & MORGAN
200 PARK AVENUE
NEW YORK, NY 10166

COPY MAILED

JUN 1 2 2002

OFFICE OF PETITIONS

In re Application of	:	
Jacques Fastrez et al	:	
Application No. 08/978,607	:	ON PETITION
Filed: November 26, 1997	:	
Attorney Docket No. 100390-09650	:	

This is a decision on the petition under 37 CFR 1.137(b), filed April 8, 2002, to revive the above-identified application.

The petition is **GRANTED**.

The above-identified application became abandoned as a result of petitioner's failure to file an appeal brief (and fee required by 37 CFR 1.17(c)) within the time period provided in 37 CFR 1.192(a). As an appeal brief (and appeal brief fee) was not filed within two (2) months of the Notice of Appeal filed June 30, 2000, and no extensions of time under the provisions of 37 CFR 1.136(a) were obtained, the appeal was dismissed and the proceedings as to the rejected claims were terminated. See 37 CFR 1.192(b) & 1.197(c). As no claim was allowed, the-above-identified application became abandoned on October 1, 2000. See MPEP 1215.04.

The above-identified application is being revived solely for purposes of continuity with a request for continued examination (RCE) filed on April 8, 2002.

The file does not indicate a change of address has been submitted, although the address given on the petition differs from the address of record. If appropriate, a change of address should be filed in accordance with MPEP 601.03. A courtesy copy of this decision is being mailed to the address given on the petition; however, the Office will mail all future correspondence solely to the address of record.

An extension of time under 37 CFR 1.136 must be filed prior to the expiration of the maximum extendable period for reply. See In re Application of S., 8 USPQ2d 1630, 1631 (Comm'r Pats. 1988). Accordingly, since the $460.00 extension of time submitted with the petition on April 8, 2002 was subsequent to the maximum

extendable period for reply, this fee is unnecessary and will be credited to petitioner's deposit account.

Telephone inquiries concerning this decision should be directed to Wan Laymon at (703) 305-9282.

The application file is being forwarded to Technology Center AU 1642.

Wan Laymon

Wan Laymon
Petitions Examiner
Office of Petitions
Office of the Deputy Commissioner
for Patent Examination Policy

cc: KRAMER LEVIN NAFTALIS & FRANKEL
919 THIRD AVENUE
NEW YORK, NY 10022

UNITED STATES PATENT AND TRADEMARK OFFICE

COMMISSIONER FOR PATENTS
UNITED STATES PATENT AND TRADEMARK OFFICE
P.O. BOX 1450
ALEXANDRIA, VA 22313-1450
www.uspto.gov

JUL 15 2004

KRAMER LEVIN NAFTALIS & FRANKEL LLP
919 THIRD AVENUE
NEW YORK, NY 10022

In re Application of: Fastrez et al. Serial No.: 08/978,607 Filed: November 26, 1997 Attorney Docket No.: 370068-9650	: : : : :	DECISION ON PETITION TO WITHDRAW THE HOLDING OF ABANDONMENT

This is in response to applicants' petition under 37 CFR. § 1.181(a) and MPEP 711.03(c) filed on May 6, 2004, requesting withdrawal of the holding of abandonment based on the timely filing of a response to the Office action mailed April 1, 2003.

A review of the file history shows that the examiner mailed a final Office action to applicants on April 1, 2003, setting a three month statutory time period for reply. On April 16, 2004 the examiner mailed a notice of abandonment for failure to respond to the outstanding Office action.

Applicants state that a petition for another two months extension of time (a one month extension having previously been filed) and a Notice of Appeal were timely filed on September 30, 2003, as evidenced by the properly executed Certificate of First Class Mailing on the reply. Applicants provide a copy of the notice of appeal and the request for another two month extension with the petition. The petition meets all of the requirements set forth in 37 CFR § 1.10(e). In view of this evidence, applicants are considered to have submitted a timely reply.

Applicants' petition is **GRANTED**. The application is restored to pending status with the mailing date of this decision. Applicants' Appeal Brief is due two months from the mailing date of this decision in accordance with 37 C.F.R. § 1.192.

Should there be any questions about this decision, please contact Marianne C. Seidel by letter addressed to Director, TC 1600, at the address listed above, or by telephone at 571-272-0584 or by facsimile at 703-872-9306.

Bruce Kisliuk
Director, Technology Center 1600

UNITED STATES PATENT AND TRADEMARK OFFICE

Commissioner for Patents
United States Patent and Trademark Office
P.O. Box 1450
Alexandria, VA 22313-1450
www.uspto.gov

Paper No. 35

ENZO THERAPEUTICS, INC.
C/O ENZO BIOCHEM INC.
527 MADISON AVENUE 9TH FLOOR
NEW YORK, NY 10022

COPY MAILED

DEC 07 2004

OFFICE OF PETITIONS

In re Application of	:	
Elazar Rabbani, et. al.	:	
Application No. 08/978,632	:	ON PETITION
Filed: November 25, 1997	:	
Attorney Docket No. ENZ-53(C)	:	

This is a decision on the renewed petition under 37 CFR 1.137(b), filed July 27, 2004, to revive the above-identified application.

The Office acknowledges receipt of the Notice of Appeal filed with the instant petition. Therefore, **The two-month period for filing an appeal brief in triplicate (accompanied by the fee required by 37 CFR 1.17(c)), runs from the date of this decision.**

The petition is **GRANTED**.

The application file is being forwarded to Technology Center Art Unit 1635.

Telephone inquiries concerning this decision should be directed to the undersigned at (571) 272-3226.

Andrea Smith
Petitions Examiner
Office of Petitions
Office of the Deputy Commissioner
for Patent Examination Policy

UNITED STATES PATENT AND TRADEMARK OFFICE

Commissioner for Patents
United States Patent and Trademark Office
P.O. Box 1450
Alexandria, VA 22313-1450
www.uspto.gov

Paper No.

ENZO BIOCHEM, INC.
527 MADISON AVENUE
(9th FLOOR)
NEW YORK NY 10022

MAILED

JUN 0 8 2009

OFFICE OF PETITIONS

In re Application of	:	
Rabbani et al.	:	
Application No. 08/978,632	:	
Filed: November 25, 1997	:	ON PETITION
Attorney Docket No. ENZ-53(C)	:	

This is in response to the papers filed November 19, 2008, in the above-identified application, namely, 1) the PETITION UNDER 37 C.F.R. 1.182 FOR EXPEDITED CONSIDERATION OF REQUESTS TO VACATE ORDER TO SHOW CAUSE AND TO EXPUNGE CONFIDENTIAL INFORMATION FROM PUBLIC RECORDS, 2) the REQUEST TO EXPUNGE CONFIDENTIAL APPLICATIONS FROM ORDERS TO SHOW CAUSE UNDER 37 CFR 1.181, and 3) the REQUEST TO VACATE ORDER TO SHOW CAUSE WHY DECISION REVIVING THIS APPLICATION SHOULD NOT BE VACATED.

The Petition Under 37 CFR 1.182 for Expedited Consideration of Petition to Expunge Confidential Information concerning this Application from Public Records is **GRANTED**.

The Petition Under 37 CFR 1.182 for Expedited Consideration of Request to Vacate Order to Show Cause is **DENIED**.

The Request to Expunge Confidential Information is **GRANTED to the extent indicated herein**.

The Request to Vacate Order to Show Cause is **DISMISSED**.

Applicants are given **TWO MONTHS** from the mail date of this decision to provide the information requested in response, or otherwise respond, to the Order to Show Cause. This period is not extendable.

BACKGROUND

On July 1, 2008, the Office issued an Order to Show Cause why the decision mailed December 7, 2004 in application No. 08/978,632 reviving the application should not be vacated.

Considering a pattern of abandonment and revival in multiple applications, the Order required *inter alia* further information as to i) the cause of any delay between the date the application became abandoned and the date a grantable 37 CFR 1.137(b) petition was filed, ii) the cause of any delay between the date the applicant was first notified that the application was abandoned and the date a grantable 37 CFR 1.137(b) petition was filed, and iii) how these delays were "unintentional." The Order specifically required explanation of the docketing system used for recording due dates for response to an Office communication and how it operated, and copies of relevant docket entries. The Order set a two-month period for response with extensions of time obtainable under 37 CFR 1.136(a).

In response, applicants filed the above-described papers. Pursuant to applicants' authorization, the extension of time fee[1] necessary to consider applicants' responses timely filed is being charged to Deposit Account No. 50-2929. It is noted that the papers filed in response did not include an explanation of the docketing system or copies of docketing records. This decision considers each of the papers, in turn, as follows: First, consideration will turn to applicants' Petition for Expedited Consideration. Then, the decision will respond to applicants' Request to Expunge Confidential Applications from the Order. Finally, the decision will address applicants' Request to Vacate the Order to Show Cause.

ON PETITION UNDER 37 C.F.R. 1.182
FOR EXPEDITED CONSIDERATION OF
REQUESTS TO VACATE ORDER TO SHOW CAUSE
AND TO EXPUNGE CONFIDENTIAL INFORMATION FROM PUBLIC RECORDS

---

[1] The two-month period for response to the Order mailed July 1, 2008 ended on September 1, 2008. To make the responses filed November 19, 2008 timely, an extension of time for response within the third month ($1110) to extend the period to December 1, 2008 has been charged.

On November 19, 2008, applicants filed the petition under 37 CFR 1.182 for expedited consideration of their REQUESTS TO VACATE ORDER TO SHOW CAUSE and TO EXPUNGE CONFIDENTIAL INFORMATION FROM PUBLIC RECORDS, also filed November 19, 2008.

The Petition to Expedite consideration of Petition to Expunge Confidential Information concerning this Application from Public Records is **GRANTED**.

The Petition to Expedite consideration of Request to Vacate Order to Show Cause is **DENIED**.

Applicants request expedited consideration of their Request to Expunge in order to restore confidentiality and to maintain in confidence all information concerning the above-referenced application. Applicants allege that the Office's inclusion of confidential information concerning this application in the Order to Show Cause by placement of the Order in at least one patented file is a direct violation of the statute, 35 U.S.C. 122(a), and the regulation, 37 C.F.R. § 1.14(a). Applicants request that the Office expedite consideration of their Request to Vacate the Order to Show Cause on the basis that if it is ultimately granted such a decision would alleviate any further expenditure of applicants' time and resources in preparing responses to any vacated Orders to Show Cause. Furthermore, while acknowledging that the Petitions to Expedite are properly considered pursuant to 37 CFR 1.182, applicants maintains that the required fee for such consideration should not be required as the inclusion in the Order to Show Cause of confidential information concerning this application was a mistake on the part of the Office, as was the entire act of issuing the Order to Show Cause.

Preliminarily, the issue of payment of the required petition fee must be addressed. Payment of a fee of $400 is required for consideration on the merits of a petition pursuant to 37 CFR 1.182. As acknowledged by applicants, a Petition to Expedite is a petition pursuant to 37 CFR 1.182. Nonetheless, there is merit to an argument that no fee should be required to expedite consideration of a petition requiring, if granted, prompt removal of confidential information issued in error by the Office. By rule, the Office does not require payment of a fee to advance consideration of the examination of applications where the Office has determined that such expedited consideration is warranted. See 37 CFR 1.102(c). In addition,

the Office by practice does not require a fee for immediate action on a petition to withdraw an application from issuance given that a delay in acting on such a petition would render the relief meaningless (e.g. the application would have issued as a patent before the petition to withdraw from issue could be granted). The justifications for not paying a fee for expedited consideration of a petition to expunge confidential information based upon an action of the USPTO are equally persuasive. First, there is a compelling public interest in the Patent and Trademark Office keeping in confidence confidential application information and thus, in addressing any allegation that they have not. Second, it is warranted that an applicant file a petition to expedite with respect to alleged disclosure of confidential information to draw attention to a petition alleging such violation and to effectuate any remedial action. Absent the filing of such a petition, the Office may not become aware of the issue presented until the petition on the merits is considered in turn and the confidential information has been open to the public. On its face, the Petition to Expedite consideration of the Petition to Expunge Confidential Information warrants consideration without a fee.

However, applicants also request expedited consideration of the Request to Vacate the Order to Show Cause. The Office is not of the opinion that the Orders to Show Cause were issued by mistake. Applicants submits no persuasive argument, nor does the Office find any compelling reason, to waive the fee required for consideration of the petition to expedite consideration of the Request to Vacate the Order to Show Cause. Accordingly, the $400 fee is required and will not be waived. The petition fee has been charged to the Deposit Account, as authorized.

Consideration now turns to the merits of the petitions to expedite. A petition to expedite a decision on a petition is treated as a request that upon making a showing justifying such action the Office take up for consideration a petition out of turn.

Applicants' basis for requesting expedited consideration of the Request to Expunge Confidential Information is to ensure fulfillment of the statutory requirement that the Office preserve in confidence patent applications. Failure to act on such a Request leaves a question as to whether confidential information has been made available to the public. Such

justifications warrant that the Office consider the Request to Expunge Confidential Information out of turn.

However, the mere fact that applicants have to expend resources to respond to the Orders to Show Cause does not justify considering the Request to Vacate out of turn. The argument that the Order was issued in error is an argument on the merits of the Order to Show Cause, and is properly presented in a response on the merits to the Order. Even if a decision on the Order to Show Cause were ultimately issued in favor of applicants, this does not warrant consideration of their Request out of turn. Their articulated interest in alleviating expenditure of time and resources in preparing a response is no more compelling than the interest of any other applicant awaiting action by the Office.

In view thereof, this decision also addresses the Petition to Expunge Confidential Information.

Nonetheless, as the application is before the reviewing attorney for consideration of the Petition to Expunge, the Request to Vacate the Order to Show Cause will also be addressed.

ON REQUEST TO EXPUNGE CONFIDENTIAL APPLICATIONS FROM ORDERS TO SHOW CAUSE UNDER 37 CFR 1.181

On November 19, 2008, applicants filed a REQUEST TO EXPUNGE CONFIDENTIAL APPLICATIONS FROM ORDERS TO SHOW CAUSE UNDER 37 CFR 1.181.

The Request is **GRANTED to the extent indicated herein**. The Order will not be rescinded; however, a substitute redacted Order will be issued.

Applicants maintain that under 37 C.F.R. § 1.14, an unpublished application, as here, whether pending or abandoned, is maintained confidential unless it is relied upon for priority purposes by a published application or patent, a circumstance not present here. Applicants assert that information concerning this non-published and non-patented application has improperly been included in the publicly available Orders to Show Cause, contrary to 37 C.F.R. § 1.14(a). Specifically, applicants allege that the Office's inclusion of confidential information concerning this application in the Order to Show Cause by

placement of the Order in at least one patented file is a direct violation of the statute, 35 U.S.C. 122(a), and the regulation, 37 C.F.R. § 1.14(a). Applicants request that all currently issued Orders to Show Cause be expunged from the public eye. Applicants further ask that the Order be reissued to remove from (1) the caption, (2) both tables, and (3) the body of the Order reference to this confidential application. Applicants further request that any discussion of the confidential application be removed from the reissued Orders.

Applicants' arguments have been considered, but not found wholly persuasive. The Order to Show Cause mailed July 9, 2008, identified this application and discussed its prior abandoned status, and identified published and non-published patent applications and patents in the header/caption, in a table and in the text of the body of the Order and discussed their prior abandoned status. However, the identification and discussion of these other applications did not abridge the confidentiality of this unpublished application in violation of the statute. The contents of this application were kept in confidence, while as allowed by the statute information regarding the previous abandoned status was given under such special circumstances as determined by the Director. The statute, 35 U.S.C. 122, states that:

> Except as provided in subsection (b)[2], applications for patents shall be kept in confidence by the Patent and Trademark Office and no information concerning the same given without authority of the applicant or owner unless necessary to carry out the provisions of an Act of Congress or in such special circumstances as may be determined by the Director.

With respect to such unpublished applications, the implementing regulation, 37 CFR 1.14, provides:

> Information concerning the filing, pendency, or subject matter of an application for patent, including status information, and access to the application, will only be given to the public as set forth in § 1.11 or in this section.

---

[2] It is noted that subsection (b) provides for the publication of applications. As noted by applicants, the instant application is not published.

All papers relating to the file of: A published application; a patent; or a statutory invention registration are open to inspection by the public, and copies may be obtained upon the payment of the fee set forth in § 1.19(b)(2). However, the public may not have access to an unpublished pending application, unless the application is otherwise identified in a patented or published application[3].

Thus, applicants are correct that the public may have access to the files of any published or patented applications that contain the Order to Show Cause. However, the fact that the Order identifies this application does not give the public the access suggested by applicants. The application contents remain preserved in confidence. With respect to public access, applicants do not acknowledge a significant distinction in the access to an unpublished pending application identified in the file contents of another application but not in the published patent application or the patent itself. Pursuant to 37 CFR 1.14(a),(vi), where an unpublished pending application is otherwise identified *in a U.S. patent, a statutory invention registration, a U.S. patent application publication, or an international patent application publication that was published in accordance with PCT Article 21(2)*, a copy of the application as originally filed of an unpublished pending application may be provided to any person, upon written request and payment of the appropriate fee (§ 1.19(b)). However, if an application is identified *in the file contents of another application, but not the published patent application or patent itself*, a granted petition for access (see paragraph (h)) or a power to inspect (see paragraph (c)) is necessary to obtain the application, or a copy of the application. (It is noted that an application is considered to have been identified in a document, such as a patent, when the application number or serial number and filing date, first named inventor, title and filing date or other application specific information are provided in the text of the patent, but not when the same identification is made in a paper in the file contents of the patent and is not included in the printed patent). Furthermore, a power to inspect is only granted by delegation from a party with access and a petition for access is only granted upon a showing that access to the application is necessary to carry out an Act of Congress or that special circumstances exist which warrant applicants being

[3] or subject of a benefit claim or the application is incorporated by reference.

granted access to all or part of the application. Thus, the mere reference to this pending unpublished application does not give the public such access to the contents of this application to consider its confidentiality breached.

Finally, the statute is not absolute. The statute allows for information concerning a confidential application to be given in such special circumstances as may be determined by the Director. In this instance, special circumstances existed that required some reference to the previously abandoned status (and subsequent revival) of specifically identified applications, including this unpublished pending application. Specifically, the basis for the Order to Show Cause and the information requested in the Order related to the exact dates and periods of abandonment of this application in conjunction with the exact dates and periods of abandonment of several other applications. Accordingly, this limited information had to be stated in order to effectuate the Order and to identify for Enzo the exact questions raised by the Order.

This purpose having been served, the Order will not be rescinded; however, the Order will be expunged to the degree permitted by the image file wrapper system. As such, the document will remain closed[4] in the image file wrapper and thus, will not be available to the public (and will be replaced in the paper files). A substitute redacted Order will be issued. Applicants are required to maintain a copy of the Order as originally issued in each application/patent.

ON REQUEST
TO VACATE ORDER TO SHOW CAUSE
WHY DECISION REVIVING THIS APPLICATION
SHOULD NOT BE VACATED

On November 19, 2008, applicants filed the REQUEST TO VACATE ORDER TO SHOW CAUSE WHY DECISION REVIVING THIS APPLICATION SHOULD NOT BE VACATED.

---

[4] Pending a decision on this petition, the Orders were closed in the Image File Wrapper of the electronically-maintained applications and the paper files containing Orders were retained in the custody of the reviewing attorney.

BACKGROUND

This application was filed on November 25, 1997.

This application became abandoned effective August 21, 2002 for failure to file a proper reply to the Office action mailed May 20, 2002. The Office action set a three-month period for reply. No proper reply was received and no extension of time was obtained. A notice of abandonment was mailed January 8, 2003. Seven months later, on August 20, 2003, a petition to revive was filed. On July 27, 2004, a renewed petition was filed. decision mailed December 7, 2004, the petition was granted.

On July 1, 2008, the Office issued an Order to Show Cause why the decision mailed December 7, 2004 reviving this application should not be vacated. Considering a pattern of abandonment and revival in multiple applications, the Order required *inter alia* further information as to i) the cause of any delay between the date the application became abandoned and the date a grantable 37 CFR 1.137(b) petition was filed, ii) the cause of any delay between the date the applicant was first notified that the application was abandoned and the date a grantable 37 CFR 1.137(b) petition was filed, and iii) how these delays were "unintentional." The Order specifically required explanation of the docketing system used for recording due dates for response to an Office communication and how it operated, and copies of relevant docket entries. The Order set a two-month period for response with extensions of time obtainable under 37 CFR 1.136(a).

Applicants do not question the Office's jurisdiction to issue this Order in this pending application. Rather, applicants assert that i) the USPTO is applying the wrong standard for petitions to revive filed in 2003, and ii) that the Order issued more than three and a half years after the USPTO's grant of Enzo's last petition is unreasonable.

The Order to Show Cause sets forth the proper standard under 37 CFR 1.137(b)

First, applicants assert that the Office is applying the wrong standard on the basis that the USPTO erroneously asserts that Enzo was required to "show that the entire delay in filing the required reply from the due date for the reply until the filing

of a grantable petition" was unintentional. Applicants argue that Enzo was only required under 37 C.F.R. § 1.137(b) to state that "the entire delay … was unintentional," which it did. Applicants argue that the Office accepted Mr. Fedus' statements of unintentional delay and, in each instance, revived the application. Further, applicants argue that the rule authorized the USPTO to seek additional information if there was a question whether the delay was unintentional, and the Office declined to do so on two separate occasions.

The point made in the Order is that applicants in order to meet the requirements of 37 CFR 1.137(b) had to have properly made the required statement of unintentional delay. Implicit in this statement is that the actual circumstances of the abandonment of the application if presented in detail to the Office would support a conclusion that the entire delay from the due date for the reply until the filing of a grantable petition was unintentional. This statement is not properly made if it is not supported by the actual circumstances of the application. The Office will not question the statement unless something in the record raises a question as to the accuracy of the statement. In this particular instance, the Office did not have cause in each individual case to question the sufficiency or accuracy of the statement. Presently, given the pattern of abandonments and revivals, the Office does have cause to question the statement of unintentional delay.

Secondly, applicants assert that the Office is applying the wrong standard on the basis that the MPEP in effect in 2003 made clear that a petition under 37 CFR 1.137(b) would generally be granted and the Office has provided no evidence that the delay herein was intentional. Applicants maintain that the Order is not supported.

It is true that the Office generally grants petitions under 37 CFR 1.137(b), especially when the petition as in the instances in this case are filed within a year of the abandonment of the application. However, this does not mean that the Office must always grant petitions with the required statement. Rather, it is well-established that:

> While the Office will generally require only the statement that the entire delay in providing the required reply from the due date for the reply until the filing of a grantable petition pursuant to 37 CFR 1.137(b) was unintentional, the

> Office may require an applicant to carry the burden of proof to establish that the delay from the due date for the reply until the filing of a grantable petition was unintentional within the meaning of 35 U.S.C. 41(a)(7) and 37 CFR 1.137(b) where there is a question whether the entire delay was unintentional. See In re Application of G, 11 USPQ2d 1378, 1380 (Comm'r Pat. 1989).

Further, even in 2003 the rule, providing for revival based on unintentional delay, stated that the Director may require additional information where there is a question whether the delay was unintentional. As such, a grant under the unintentional standard was not and currently remains not a sure thing.

Moreover, applicants wrongly suggest that the Office must provide evidence that the delay was intentional. Rather, the Office should articulate a basis for their conclusion that there is a question whether the entire delay was unintentional. The burden is not on the Office to provide evidence that the delay was intentional. Applicants carry the burden of proof to establish that the "entire" delay was "unintentional." See In re Application of G, supra.

Finally, the Order to Show Cause is supported. The Order is based on the patterns of abandonment and revival detailed in the tables and text of the Order. Applicants argue that the purported pattern referenced in the Order relates to abandonments and revivals in *other* applications and this information has nothing whatsoever to do with this application or whether its delay was intentional. This argument is without merit. The other applications are not random applications, but applications owned by and prosecuted on behalf of Enzo. The decisions to reply or not to reply, to file petitions to revive or not to file petitions to revive, were made by Enzo in these applications. The abandonment of an application is not a routine matter. Furthermore, the fact alone that Enzo on a regular basis had applications become abandoned and then revived is significant. Moreover, as stated in the Order, when looking at this pattern and seeing that many applications were revived just days short of the one year deadline, questions were raised. The pattern raises a question as to whether the delay in filing a reply or the delay in filing petitions was unintentional, as stated by applicants. The pattern raises questions as to the validity of all statements of unintentional delay ever made by

or on behalf of Enzo. The Office has determined that the conclusion that applicants previously met their burden with their statements of unintentional delay may be incorrect. Accordingly the Office issued the Orders to Show Cause Why the Decision Reviving This Application Should Not be Vacated.

It is noted that applicants in response to this Order have not provided the additional information requested to answer the Office's questions. Applicants have reiterated the limited statements made on petition to revive. Applicants have not provided new statements or docketing records as requested.

The Issuance of the Order to Show Cause is not unreasonable

Finally, applicants argue that the Order issued three and a half years after the Office's grant of Enzo's last petition is unreasonable. This matter is current. This application is currently pending before the Office. The Office has the authority to require information reasonably necessary to treatment of a matter in an application.

It is unfortunate that the Office did not recognize this pattern sooner. However, this delay by the Office has to be considered in light of applicants' action. The question being should the revival of applicants' application be sustained where applicants engaged in a pattern of what appears to be intentionally abandoning or intentionally delaying the filing of petitions to revive.

CONCLUSION

The Order was properly issued. The response received does not include the additional information, including docketing records, requested by the Order.

Applicants are given a two (2) month nonextendable period to complete their response to the Order to Show Cause. Applicants should note that a future reply that is incomplete will be treated as non-responsive and additional time will not be given to complete the reply.

Telephone inquiries regarding this decision may be directed to Senior Petitions Attorney Nancy Johnson at 571-272-3219.

Charles Pearson
Director
Office of Petitions

UNITED STATES PATENT AND TRADEMARK OFFICE

Commissioner for Patents
United States Patent and Trademark Office
P.O. Box 1450
Alexandria, VA 22313-1450
www.uspto.gov

Paper No.

ENZO BIOCHEM, INC.
527 MADISON AVENUE
(9th FLOOR)
NEW YORK NY 10022

MAILED

JUN 08 2009

OFFICE OF PETITIONS

In re Application of	:	
Rabbani et al.	:	ORDER TO SHOW CAUSE WHY
Application No. 08/978,632	:	DECISIONS REVIVING
Filed: November 25, 1997	:	APPLICATIONS SHOULD NOT
Atty Docket No. ENZ-53(C)	:	BE VACATED

This is an Order to Show Cause why the decision mailed December 7, 2004 in application No. 08/978,632 reviving the application should not be vacated.

Applicants are given **TWO MONTHS** from the mailing date of this Order to respond. This period is not extendable. A response must be filed in each of the subject applications for which applicant seeks relief from this Order. See 37 CFR 1.4(d).

FACTS

The ENZO applications at issue became abandoned at the end of the shortened statutory periods for failure to file responses to outstanding Office actions. No petitions for extensions of time for response were filed in any of the applications. Notices of Abandonment were mailed in each application. Enzo later filed petitions to revive that were granted. The following tables set forth the relevant ENZO applications, by application number, mailing date of Office action, date of abandonment, mailing date of notice of abandonment, date of filing of petition to revive, and date of mailing of decision granting petition to revive. The data is arranged in chronological order according to the date a petition to revive was filed starting with the earliest date, 23 December 1992, and ending with the latest date, 29 November 2005.

Application Number	Office Action Mailed	Abandoned[1]	Notice of Abandon	Petition Filed	Decision Date
	26-Sep-91	26-Dec-91	05-May-92	23-Dec-92	29-Jan-93
	13-Apr-92	13-Jul-92	16-Nov-92	15-Jan-93	12-Feb-93
	01-Mar-93	01-Jun-93	01-Oct-93	16-Nov-93	10-May-94
	04-Nov-93	04-Feb-94	09-Jun-94	03-Feb-95	20-Mar-95
	08-Sep-94	08-Dec-94	17 -Apr-95	07-Jun-95	17-Jun-96
	31-Oct-95	30-Nov-95	12-Jun-96	01-Oct-96	26-Nov-96
	28-Dec-95	28-Mar-96	22-Jul-96	28-Mar-97	09-Jul-97
	28-Feb-96	28-May-96	27 -Sep-96	29-May-97	14-Jul-97
	04-Apr-96	04-Jul-96	14-Nov-96	03-Jul-97	17-Nov-98
	25-Nov-96	25-Feb-97	23-Jun-97	25-Nov-97	09-Feb-98
	27-Nov-96	27-Feb-97	21-Jul-97	26-Nov-97	24-Feb-98
	09-Apr-97	09-Jul-97	12-Nov-97	03-Feb-98	15-Apr-98
	26-Nov-97	26-Feb-98	17 -Jul-98	20-Nov-98	06-Jul-99
	05-Sep-98	05-Sep-98	15-Dec-98	15-Mar-99	01-Jun-99
	07-Jul-98	07 -Oct-98	02-Mar-99	02-Jun-99	21-Jun-99
	13-Apr-99	13-Jul-99	23-Nov-99	23-Feb-00	19-Jul-00
	04-Oct-00	04-Nov-00	25-Apr-01	26-Jul-01	09-Aug-01
	12-Sep-00	12-Dec-00	26-Mar-01	12-Dec-01	04-Jun-02
	06-Dec-00	06-Mar-01	28-Aug-01	06-Mar-02	26-Mar-02
	28-Feb-01	28-May-01	23-Oct-01	28-May-02	27-Sep-02
	13-Mar-01	13-Jun-01	05-Nov-01	13-Jun-02	31-Jul-02
	02-Oct-01	02-Jan-02	05-Jun-02	02-Jan-03	24-Jan-03
	18-Jun-02	18-Sep-02	08-Apr-03	06-Aug-03	27-Jul-04
08978632	20-May-02	20-Aug-02	08-Jan-03	20-Aug-03	07-Dec-04
	06-Dec-02	06-Mar-03	23-Sep-03	20-Nov-03	11-Apr-06
	22-Apr-03	22-Jul-03	16-Dec-03	08-Dec-03	07-May-04
	12-Feb-04	12-May-04	28-Oct-04	04-Nov-04	28-Jan-05
	02-Mar-05	02-Jun-05	15-Nov-05	29-Nov-05	13-Feb-06

* It is noted that no Order to Show Cause has been issued in some of the applications listed in the table. These applications are currently abandoned. Further, Office records support a conclusion that there are no claims for the benefit of priority to these applications. Thus, the Office has concluded that it is unnecessary to issue an Order to Show Cause in these applications.

---

[1] These applications went abandoned for failure to respond to an outstanding Office action within the shortened statutory period for reply. The dates set forth in the table reflect the ending date of the shortened statutory period set forth in the Office action. If the Office action was a Non-final or Final rejection then the shortened statutory period is three (3) months. However, if the Office action was a restriction requirement or a notice to comply with 37 CFR 1.821 et seq., the shortened statutory period is one (1) month or 30 days, whichever is longer. No extensions of time for response were filed.

Each petition to revive included payment of the petition fee, a proposed response[2] and a statement of unintentional delay. Many cases included statements by attorney Ronald Fedus, Corporate Counsel for Enzo, such as that "the delay in taking action was unintentional." In some cases, attorney Fedus noted that the petition was being made within one year of the date of abandonment pursuant to 37 CFR 1.137(b).

During all periods relevant to the decisions on petition in the above-identified applications, Enzo was required to show that the entire delay in filing the required reply from the due date for the reply until the filing of a grantable petition pursuant to 37 CFR 1.137(b) was unintentional. Further, the Director could require additional information where there was a question whether the delay was unintentional. The decisions granting the petitions were based on the statement of unintentional delay, that the "delay in taking action was unintentional" or otherwise, that "the entire delay in filing the required reply from the due date for the reply to the date of filing of a grantable petition was unintentional." When the language of the statement varied from that required under 37 CFR 1.137(b), the petitions examiner specifically noted that the statement presented (the "abandonment was unintentional") did not comply with 37 CFR 1.137(b), as is Office practice. For example, in one application, the petitions examiner stated that the statement was accepted as meaning that the "delay was unintentional." Petitioner was advised to provide a statement to that effect if the Office's interpretation was incorrect. Further, petitioner was reminded that:

> A person seeking revival due to unintentional delay cannot make a statement that the delay was unintentional unless the entire delay, including the delay from the date it was discovered that the application was abandoned until the filing of the petition under 37 CFR 1.137(b) was unintentional.

---

[2] 37 CFR 1.137(c) applies to the reply requirement for petitions under 37 CFR 1.137(a) and (b). In a nonprovisional application abandoned for failure to prosecute, the required reply may be met by the filing of a continuing application. In a nonprovisional utility or plant application filed on or after June 8, 1995, and abandoned for failure to prosecute, the required reply may also be met by the filing of a request for continued examination (RCE) in compliance with 37 CFR 1.114.

BASIS FOR ORDER

It is well established that an applicant is expected to exercise diligence throughout the prosecution of their application. By statute, 35 U.S.C. 133, upon failure of the applicant to prosecute the application within six months after any action therein, of which notice has been given or mailed to the applicant, or within such shorter time, not less than thirty days, the application will be regarded as abandoned. This requirement of diligence extends to the requirement to take action upon becoming aware that the application has become abandoned.

For a decision granting revival based on unintentional delay to be proper, the statement that the delay was unintentional must be appropriately made. The Patent and Trademark Office does not have authority to revive *intentionally* abandoned applications. The patent statute at 35 U.S.C. § 41(a)(7) authorizes the Director (formerly Commissioner) to revive an "unintentionally abandoned application." The legislative history of Public Law 97-247 reveals that 35 U.S.C. § 41(a)(7) grants the Office more discretion than in 35 U.S.C. §§ 133 or 151 to revive abandoned applications in appropriate circumstances. However, that discretion is not boundless:

> "[u]nder this section a petition accompanied by either a fee of $500 or a fee of $50 would not be granted where the abandonment or the failure to pay the fee for issuing the patent was intentional as opposed to being unintentional or unavoidable." [emphasis added]. See H.R. Rep. No. 542, 97th Cong., 2d Sess. 6-7 (1982), reprinted in 1982 U.S.C.C.A.N. 770-71.

The revival of an intentionally abandoned application is antithetical to the meaning and intent of the statute and regulation. Likewise, the revival of an abandoned application based on an inappropriately made statement that the abandonment was unintentional is contrary to the meaning and intent of the statute and regulation.

In a situation where an application has been abandoned for less than a year and there is no reason to believe that the abandonment was intentional (e.g., an express abandonment letter in the record), a description of the circumstances surrounding the abandonment may be provided but is not required. A mere

statement by a proper party that the abandonment was unintentional is all that is required.

A statement made by a proper party (i.e. the party (or a registered practitioner on their behalf)) having the right or authority to reply (or not to reply) to avoid abandonment is generally accepted as appropriately made. This is because the applicant is obligated under 37 CFR 10.18 to inquire into the underlying facts and circumstances when this statement is provided to the Office. In addition, providing an inappropriate statement in a petition under 37 CFR 1.137(b) to revive an abandoned application may have an adverse effect when attempting to enforce any patent resulting from the application. See *Lumenyte Int 'l Corp. v. Cable Lite Corp.*, Nos. 96-1011, 96-1077, 1996 U.S. App. LEXIS 16400, 1996 WL 383927 (Fed. Cir. July 9, 1996)(unpublished)(patents held unenforceable due to a finding of inequitable conduct in submitting an inappropriate statement that the abandonment was unintentional). For these reasons, the Office generally relies upon the applicant's duty of candor and good faith and accepts the statement that the abandonment was unintentional without requiring further information.

In each of the Enzo applications, attorney Fedus' or another practitioner's statement was accepted on the basis of their duty of candor and good faith as a registered practitioner to inquire into the underlying facts and circumstances of the abandonment when making a statement that the delay in taking action was unintentional. However, in each instance, applicant was directly advised by the petitions examiner or put on notice by the Office via the Manual of Patent Examination Policy (MPEP) that "[a] person seeking revival due to unintentional delay cannot make a statement that the delay was unintentional unless the entire delay, including the delay from the date it was discovered that the application was abandoned until the filing of the petition under 37 CFR 1.137(b) was unintentional." See MPEP 711.03(c).

As further provided in MPEP 711.03(c):

> The abandonment of an application is considered to be a deliberately chosen course of action, and the resulting delay cannot be considered as "unintentional" within the meaning of 37 CFR 1.137(b), where the applicant deliberately permits the application to become abandoned. See *Application of G*, 11 USPQ2d at 1380. Likewise, where

> the applicant deliberately chooses not to seek or persist in seeking the revival of an abandoned application, or where the applicant deliberately chooses to delay seeking the revival of an abandoned application, the resulting delay in seeking revival of the abandoned application cannot be considered as "unintentional" within the meaning of 37 CFR 1.137(b).

A delay resulting from a deliberately chosen course of action on the part of the applicant does not become an "unintentional" delay within the meaning of 37 CFR 1.137(b) because:

> (A) the applicant does not consider the claims to be patentable over the references relied upon in an outstanding Office action;
> (B) the applicant does not consider the allowed or patentable claims to be of sufficient breadth or scope to justify the financial expense of obtaining a patent;
> (C) the applicant does not consider any patent to be of sufficient value to justify the financial expense of obtaining the patent;
> (D) the applicant does not consider any patent to be of sufficient value to maintain an interest in obtaining the patent; or
> (E) the applicant remains interested in eventually obtaining a patent, but simply seeks to defer patent fees and patent prosecution expenses.

Likewise, a change in circumstances that occurred subsequent to the abandonment of an application does not render "unintentional" the delay resulting from a previous deliberate decision to permit an application to be abandoned. An intentional course of action is not rendered unintentional when, upon reconsideration, the applicant changes his or her mind as to the course of action that should have been taken. See *In re Maldague*, 10 USPQ2d 1477, 1478 (Comm'r Pat. 1988).

Moreover, an intentional delay resulting from a deliberate course of action chosen by the applicant is not affected by:

> (A) the correctness of the applicant's (or applicant's representative's) decision to abandon the application or not to seek or persist in seeking revival of the application;

(B) the correctness or propriety of a rejection, or other objection, requirement, or decision by the Office; or
(C) the discovery of new information or evidence, or other change in circumstances subsequent to the abandonment or decision not to seek or persist in seeking revival.

Obviously, delaying the revival of an abandoned application, by a deliberately chosen course of action, until the industry or a competitor shows an interest in the invention is the antithesis of an "unavoidable" or "unintentional" delay. An intentional abandonment of an application, or an intentional delay in seeking the revival of an abandoned application, precludes a finding of unavoidable or unintentional delay pursuant to 37 CFR 1.137. See *In re Maldague*, 10 USPQ2d 1477, 1478 (Comm'r Pat. 1988).

The Office may require an applicant to carry the burden of proof to establish that the delay from the due date for the reply until the filing of a grantable petition was unintentional within the meaning of 35 U.S.C. 41(a)(7) and 1.137(b) where there is a question whether the entire delay was unintentional. See *In re Application of G*, 11 USPQ2d 1378, 1380 (Comm'r Pat. 1989). Applicants' failure to carry the burden of proof to establish that the "entire" delay was "unintentional" may lead to the denial of the petition under 37 CFR 1.137(b), regardless of the circumstances that originally resulted in the abandonment of the application.

The question has now arisen as to whether the statements were appropriately made under the circumstances of the abandonment of these applications. To have been appropriately made, the statement of unintentional delay had to have supported a conclusion that the delay in filing a response and the delay in filing a petition were unintentional. The statement of unintentional delay is not appropriate where any of the delays are intentional.

The following table sets forth the number of days in delay from the date of abandonment of the application to the date the petition was filed (col. 5) and the number of days in delay from the date of the mailing of the notice of abandonment to the date of filing of the petition (col. 6).

Application Number	Abandoned	Notice of Abandon	Petition Filed	Days After Abandoned	Days After Notice
	13-Jul-92	16-Nov-92	15-Jan-93	186	60
	26-Dec-91	05-May-92	23-Dec-92	363	232
	01-Jun-93	01-0ct-93	16-Nov-93	168	46
	08-Dec-94	17-Apr-95	07-Jun95	181	51
	04-Feb-94	09-Jun-94	03-Feb-95	364	239
	31-Jan-96	10-Jun-96	01-0ct-96	244	113
	09-Jul-97	12-Nov-97	03-Feb-98	209	83
	04-Jul-96	14-Nov-96	03-Jul-97	364	231
	13-Jul-99	23-Nov-99	23-Feb-00	225	92
	27-Feb-97	21-Jul-97	26-Nov-97	272	128
	28-Mar-96	22-Jul-96	28-Mar-97	365	249
	28-May-96	27 -Sep-96	29-May-97	366	244
	26-Feb-98	17-Jul-98	20-Nov-98	267	126
	25-Feb-97	23-Jun-97	25-Nov-97	273	155
	05-Sep-98	15-Dec-98	15-Mar-99	191	90
	07-0ct-98	02-Mar-99	02-Jun-99	238	92
08978632	20-Aug-02	08-Jan-03	20-Aug"03	365	224
	06-Mar-01	28-Aug-01	06-Mar-02	365	190
	1 8-Sep-02	08-Apr-03	06-Aug-03	322	120
	13-Jun-01	05-Nov-01	13-Jun-02	365	220
	12-Dec-00	26-Mar-01	12-Dec-01	365	261
	04-Jan-01	25-Apr-01	26-Jul-01	203	92
	02-Jan-02	05-Jun-02	02-Jan-03	365	211
	22-Jul-03	16-Dec-03	08-Dec-03	139	-8
	28-May-01	23-0ct-01	28-May-02	365	217
	06-Mar-03	23-Sep-03	20-Nov-03	259	58
	02-Jun-05	15-Nov-05	29-Nov-05	180	14
	12-May-04	28-0ct-04	04-Nov-04	176	7

A review of several applications owned by ENZO reveals that there was a pattern of abandoned applications and delayed revivals. For example, of 28 occurrences of revival of ENZO applications, 11 have been identified where applicant waited almost a year (in fact, exactly 364 to 366 days) to file a petition to revive. Further, of those 28 occurrences, in 20 instances, applicant waited 3 months or more after the mailing of the notice of abandonment to file a petition to revive. Only 7 times did applicant file a petition to revive within 2 months of the mailing of the notice of abandonment. This pattern was

not before the Office when the decisions were made to grant the petitions to revive in the various applications.

Given all of this information, a question is raised as to whether in each application i) applicant deliberately chose not to respond to the Office action and to allow the application to become abandoned, ii) applicant deliberately chose not to seek revival of an abandoned application, or iii) applicant deliberately chose to delay seeking the revival of the abandoned application.

Under the circumstances, beyond the statement that the delay in taking action was unintentional, additional explanation is required. Accordingly, the Office is requiring applicant to show cause as to why the decision granting the petition to revive in each of the involved applications should not be vacated.

The Office is requiring further information as to i) the cause of the delay between the date the application became abandoned and the date a grantable 37 CFR 1.137(b) petition was filed, ii) the cause of the delay between the date the applicant was first notified that the application was abandoned and the date a grantable 37 CFR 1.137(b) petition was filed, and iii) how these delays were "unintentional." Further, if there was a delay in discovering the abandoned status of the application, a showing as to how the delay occurred despite the exercise of due care or diligence on the part of he applicant. What caused the delay in filing the petition to revive until just before the end of the one-year period? In essence, what is applicant's basis for the assertion that the delay was unintentional within the meaning of 35 U.S.C. 41(a)(7) and 37 CFR 1.137(b)?

Where any single application was abandoned and revived on multiple occasions, the response to this Order should address each occasion. This is regardless of whether the tables set forth herein specifically note those abandonments.

Among whatever evidence the applicant deems necessary to adequately respond to the Order, the Office is requiring an explanation of the docketing system used for recording due dates for response to an Office communication and how it operated. Upon receipt of an Office communication, how were the shortened statutory period for reply, statutory period for reply and

period for filing a petition to revive docketed? How is it that a significant number of petitions were filed on the 363rd - 365th day of abandonment? Was the one-year period to file a petition to revive specifically docketed? When electing to file a continuing application rather than a reply to an Office action, how was copendency verified? In other words, what is Enzo's explanation for the delay in filing a petition to revive solely for the purposes of continuity? Enzo's response should include copies of the relevant docket entries, including a showing of what action (or inaction) was docketed for a date three months from the mail date of the Office action (or one month in the instance of a restriction requirement or notice to comply); what action (or inaction) was docketed for a date six months from the date of the end of the statutory period for reply (or seven months in the instance of a notice to comply); and what action was docketed for a date 1 year from the date of likely abandonment (both counting 1 year from the end date of expiration of the shortened statutory period and 1 year from the end date of the statutory period for reply). It is expected that the record would include, but not be limited to, the application number, attorney docket number, the mail date of the Office action and the due date for the response.

Further correspondence with respect to this Order should be addressed as follows:

By mail: Mail Stop Petition
Commissioner for Patents
P.O. Box 1450
Alexandria, VA 22313-1450

By FAX: (571) 273-8300
ATTN: NANCY JOHNSON
SENIOR PETITIONS ATTORNEY

By hand: Customer Service Window
Randolph Building
401 Dulany Street
Alexandria, VA 22314

Telephone inquiries specific to this matter should be directed to Senior Petitions Attorney Nancy Johnson at (571) 272-3219.

Charles Pearson
Director
Office of Petitions

STATUTES, RULES AND REGULATIONS

35 U.S.C. 133 provides that:

> Upon failure of the applicant to prosecute the application within six months after any action therein, of which notice has been given or mailed to the applicant, or within such shorter time, not less than thirty days, as fixed by the Director in such action, the application shall be regarded as abandoned by the parties thereto, unless it be shown to the satisfaction of the Director that such delay was unavoidable.

37 CFR 1.137(b) provides:

If the delay in reply by applicant or patent owner was unintentional, a petition may be filed pursuant to this paragraph to revive an abandoned application, a reexamination prosecution terminated under §§ 1.550(d) or 1.957(b) or limited under § 1.957(c), or a lapsed patent. A grantable petition pursuant to this paragraph must be accompanied by:

> (1) The reply required to the outstanding Office action or notice, unless previously filed;
> (2) The petition fee as set forth in § 1.17(m);
> (3) A statement that the entire delay in filing the required reply from the due date for the reply until the filing of a grantable petition pursuant to this paragraph was unintentional. The Director may require additional information where there is a question whether the delay was unintentional; and
> (4) Any terminal disclaimer (and fee as set forth in § 1.20(d)) required pursuant to paragraph (d) of this section.

*****

UNITED STATES PATENT AND TRADEMARK OFFICE

Commissioner for Patents
United States Patent and Trademark Office
P.O. Box 1450
Alexandria, VA 22313-1450
www.uspto.gov

Paper No.

ENZO BIOCHEM, INC.
527 MADISON AVENUE
(9th FLOOR)
NEW YORK NY 10022

COPY MAILED
FEB 02 2010

In re Application of	:	
Rabbani et al.	:	
Application No. 08/978,632	:	
Filed: November 25, 1997	:	ON PETITION
Attorney Docket No. ENZ-53(C)	:	

This is a decision on the petition filed, August 10, 2009, requesting that the order to show cause[1] mailed on June 8, 2009 be vacated.

The record of this application and petitioners' response to the order to show cause have been reviewed and considered. The record of this application does not indicate that the abandonment of the application occurred despite the exercise of reasonable due care or diligence on the part of the applicant. See In re Mattullath, 38 App. D.C. 497, 514-15 (1912), and Ex parte Pratt, 1887 Dec.Comm'r Pat. 31, 32-33 (1887). The petition to revive this application, however, is not under the "unavoidable" standard of 35 U.S.C. § 133 and 37 CFR 1.137(a), but is under the "unintentional" standard of 35 U.S.C. § 41(a)(7) and 37 CFR 1.137(b). Therefore, the Office of the Commissioner for Patents is terminating the inquiry initiated by the order to show cause without vacating or otherwise disturbing the decision reviving the above-identified application.

---

[1] The order requested petitioners to show cause why the decision mailed December 7, 2004 in application No. 08/978,632 reviving the application should not be vacated.

The petition is granted to the extent that the Office of the Commissioner for Patents will not vacate or otherwise disturb the decisions reviving the above-identified application.

As this inquiry has been terminated without vacating or otherwise disturbing the decision reviving the above-identified application, petitioners' request that the order to show cause be "vacated" is dismissed as moot.

Telephone inquiries regarding this decision may be directed to Senior Petitions Attorney Nancy Johnson at 571-272-3219.

Charles Pearson
Director
Office of Petitions

UNITED STATES PATENT AND TRADEMARK OFFICE

Commissioner for Patents
United States Patent and Trademark Office
P.O. Box 1450
Alexandria, VA 22313-1450
www.uspto.gov

Paper No.

ENZO BIOCHEM, INC.
527 MADISON AVENUE
(9th FLOOR)
NEW YORK NY 10022

MAILED

JUL 06 2010

OFFICE OF PETITIONS

In re Application of :
Rabbani et al. :
Application No. 08/978,632 :
Filed: November 25, 1997 : ON PETITION
Attorney Docket No. ENZ-53(C) :

Receipt of the paper styled "RESPONSE TO DECISION TERMINATING THE ORDER TO SHOW CAUSE" filed May 4, 2010 is acknowledged.

By decision mailed February 2, 2010, the Office of the Commissioner for Patents terminated the inquiry initiated by the order to show cause without vacating or otherwise disturbing the decision reviving the above-identified application. The Office, thereby, resolved the issue raised by the order to show cause.

This further response of petitioner is being placed in the file record but will not be considered by the Office. As the issue raised by the order to show cause has been resolved, no further action is necessary.

Telephone inquiries regarding this decision may be directed to Senior Petitions Attorney Nancy Johnson at 571-272-3219.

Anthony Knight
Director
Office of Petitions

UNITED STATES PATENT AND TRADEMARK OFFICE

COMMISSIONER FOR PATENTS
UNITED STATES PATENT AND TRADEMARK OFFICE
WASHINGTON, D.C. 20231
www.uspto.gov

Paper No. 22

Ronald C. Fedus
Enzo Diagnostics, Inc.
c/o Enzo Biochem, Inc.
527 Madison Avenue (9th Floor)
New York, NY 10022

COPY MAILED
SEP 1 6 2002
OFFICE OF PETITIONS

In re Application of
Elazar Rabbani, et al.
Application No. 08/978,633
Filed: November 25, 1997
Attorney Docket No. ENZ-53

ON PETITION

This is a decision on the petition under 37 CFR 1.137(b), filed June 12, 2002, to revive the above-identified application.

The petition is **GRANTED**.

The above-identified application became abandoned for failure to reply within the meaning of 37CFR 1.113 in a timely manner to the final Office action mailed December 19, 2000, which set a shortened statutory period for reply of three (3) months. A three (3) months extension of time under the provisions of 37 CFR 1.136(a) was obtained. Accordingly, the application became abandoned on June 20, 2001.

37 CFR 1.137(b)(3) requires a statement that the entire delay in filing the required reply from the due date for the reply until the filing of a grantable petition pursuant to 37 CFR 1.137(b) was unintentional. If the statement contained in the instant petition varies from the language required by 37CFR 1.137(b)(3), the statement contained in the instant petition is being construed as the statement required by 37 CFR 1.137(b)(3) and petitioner must notify the Office if this is **not** a correct interpretation of the statement contained in the instant petition.

37 CFR 1.137(c) requires a terminal disclaimer dedicating to the public a terminal part of the term of any patent granted on the above-identified application or any patent granted on any continuing application that contains a specific reference under 35 U.S.C. 120, 121, or 365(c) to the above-identified application. Since the application is not a utility or plant application filed before June 8, 1995, a terminal disclaimer is not required. Accordingly, the terminal disclaimer fee of $55.00 will be refunded to petitioner's deposit account.

The amendment filed June 12, 2002 is being construed as the submission required under 37 CFR 1.114 for the RCE filed on June 19, 2001.

Telephone inquiries concerning this decision should be directed to Cheryl Gibson-Baylor at (703)308-5111, or in her absence, Sherry Brinkley at (703)305-9220.

The application file is being forwarded to Technology Center 1600, Art Unit 1635 for processing the Request for Continued Examination under 37 CFR 1.114, previously filed on June 19, 2001.

Cheryl Gibson-Baylor
Petitions Examiner
Office of Petitions
Office of the Deputy Commissioner
for Patent Examination Policy

Sherry Brinkley
Petitions Examiner

UNITED STATES PATENT AND TRADEMARK OFFICE

COMMISSIONER FOR PATENTS
UNITED STATES PATENT AND TRADEMARK OFFICE
WASHINGTON, D.C. 20231
www.uspto.gov

Paper No. 27

Enzo Diagnostics, Inc.
c/o Enzo Biochem, Inc.
527 Madison Avenue, 9th Floor
New York, NY 10022

COPY MAILED

SEP 1 3 2002

OFFICE OF PETITIONS

In re Application of :
Elazar Rabbani, et al. :
Application No. 08/978,634 :
Filed: November 25, 1997 :
Attorney Docket No. ENZ-53 (DIV-2) :

ON PETITION

This is a decision on the petition under 37 CFR 1.137(b), filed June 12, 2002, to revive the above-identified application.

The petition is **GRANTED**.

The above-identified application became abandoned for failure to reply within the meaning of 37CFR 1.113 in a timely manner to the final Office action mailed December 19, 2000, which set a shortened statutory period for reply of three (3) months. A three (3) months extension of time under the provisions of 37 CFR 1.136(a) was obtained. Accordingly, the application became abandoned on June 20, 2001.

37 CFR 1.137(b)(3) requires a statement that the entire delay in filing the required reply from the due date for the reply until the filing of a grantable petition pursuant to 37 CFR 1.137(b) was unintentional. If the statement contained in the instant petition varies from the language required by 37CFR 1.137(b)(3), the statement contained in the instant petition is being construed as the statement required by 37 CFR 1.137(b)(3) and petitioner must notify the Office if this is **not** a correct interpretation of the statement contained in the instant petition.

37 CFR 1.137(c) requires a terminal disclaimer dedicating to the public a terminal part of the term of any patent granted on the above-identified application or any patent granted on any continuing application that contains a specific reference under 35 U.S.C. 120, 121, or 365(c) to the above-identified application. Since the application is not a utility or plant application filed before June 8, 1995, a terminal disclaimer is not required. Accordingly, the terminal disclaimer fee of $55.00 will be refunded to petitioner's deposit account.

The amendment filed June 12, 2002 is being construed as the submission required under 37 CFR 1.114 for the RCE filed on June 19, 2001.

BEST AVAILABLE COPY

Telephone inquiries concerning this decision should be directed to Cheryl Gibson-Baylor at (703)308-5111, or in her absence, Sherry Brinkley at (703)305-9220.

The application file is being forwarded to Technology Center 1600, Art Unit 1635 for processing the Request for Continued Examination under 37 CFR 1.114, previously filed on June 19, 2001.

Cheryl Gibson-Baylor
Petitions Examiner
Office of Petitions
Office of the Deputy Commissioner
for Patent Examination Policy

Sherry Brinkley
Petitions Examiner

BEST AVAILABLE COPY

UNITED STATES PATENT AND TRADEMARK OFFICE

COMMISSIONER FOR PATENTS
UNITED STATES PATENT AND TRADEMARK OFFICE

Paper No. 28

Enzo Therapetics
c/o Enzo Biochem, Inc.
527 Madison Avenue, 9th Floor
New York, NY 10022

COPY MAILED

SEP 13 2002

OFFICE OF PETITIONS

In re Application of
Elazar Rabbani, et al.
Application No. 08/978,635
Filed: November 25, 1997
Attorney Docket No. ENZ-53(DIV-4)

ON PETITION

This is a decision on the petition under 37 CFR 1.137(b), filed July 17, 2002, to revive the above-identified application.

The petition is **GRANTED**.

The above-identified application became abandoned for failure to reply within the meaning of 37CFR 1.113 in a timely manner to the final Office action mailed January 17, 2001, which set a shortened statutory period for reply of three (3) months. A three (3) months extension of time under the provisions of 37 CFR 1.136(a) was obtained. Accordingly, the application became abandoned on July 18, 2001.

37 CFR 1.137(b)(3) requires a statement that the entire delay in filing the required reply from the due date for the reply until the filing of a grantable petition pursuant to 37 CFR 1.137(b) was unintentional. If the statement contained in the instant petition varies from the language required by 37CFR 1.137(b)(3), the statement contained in the instant petition is being construed as the statement required by 37 CFR 1.137(b)(3) and petitioner must notify the Office if this is **not** a correct interpretation of the statement contained in the instant petition.

37 CFR 1.137(c) requires a terminal disclaimer dedicating to the public a terminal part of the term of any patent granted on the above-identified application or any patent granted on any continuing application that contains a specific reference under 35 U.S.C. 120, 121, or 365(c) to the above-identified application. Since the application is not a utility or plant application filed before June 8, 1995, a terminal disclaimer is not required. Accordingly, the terminal disclaimer fee of $55.00 will be refunded to petitioner's deposit account.

The amendment filed July 17, 2002 is being construed as the submission required under 37 CFR 1.114 for the RCE filed on July 17, 2001.

Telephone inquiries concerning this decision should be directed to Cheryl Gibson-Baylor at (703)308-5111, or in her absence, Sherry Brinkley at (703)305-9220.

The application file is being forwarded to Technology Center 1600, Art Unit 1635 for processing the Request for Continued Examination under 37 CFR 1.114, previously filed on July 17, 2001.

Cheryl Gibson-Baylor
Petitions Examiner
Office of Petitions
Office of the Deputy Commissioner
for Patent Examination Policy

Sherry Brinkley
Petitions Examiner

UNITED STATES PATENT AND TRADEMARK OFFICE

Commissioner for Patents
United States Patent and Trademark Office
P.O. Box 1450
Alexandria, VA 22313-1450
www.uspto.gov

ENZO THERAPETICS
C/O ENZO BIOCHEM INC
527 MADISON AVENUE 9TH FLOOR
NEW YORK NY 10022

COPY MAILED

NOV 1 0 2004

OFFICE OF PETITIONS

In re Application of	:	
Rabbani et al.	:	
Application No. 08/978,635	:	ON PETITION
Filed: November 25, 1997	:	
Attorney Docket No. ENZ-53(DIV4)	:	

This is a decision on the petition under 37 C.F.R. § 1.137(b), filed October 22, 2004, to revive the above-identified application.

The petition is **GRANTED.**

This application became abandoned for failure to timely reply to the Office action mailed March 12, 2004. No extensions of time under the provisions of 37 CFR 1.136(a) were obtained. Accordingly, this application became abandoned on April 13, 2004. A Notice of Abandonment was mailed September 22, 2004.

Petitioner has met the requirements to revive the above-identified application pursuant to 37 CFR 1.137(b).

This matter is now being referred to Technology Center 1600 for further examination on the merits.

Telephone inquiries regarding this decision should be directed to the undersigned at (571) 272-3282.

Liana Chase
Petitions Examiner
Office of Petitions
Office of the Deputy Commissioner
for Patent Examination Policy

UNITED STATES PATENT AND TRADEMARK OFFICE

COMMISSIONER FOR PATENTS
UNITED STATES PATENT AND TRADEMARK OFFICE
WASHINGTON, D.C. 20231
www.uspto.gov

Paper No. 28

Ronald C. Fedus
Enzo Diagnostics, Inc.
c/o Enzo Biochem, Inc.
527 Madison Avenue, 9th Floor
New York, NY 10022

COPY MAILED

SEP 13 2002

OFFICE OF PETITIONS

In re Application of :
Elazar Rabbani, et al. :
Application No. 08/978,636 :
Filed: November 25, 1997 :
Attorney Docket No. ENZ-53 (DIV-3) :

ON PETITION

This is a decision on the petition under 37 CFR 1.137(b), filed June 18, 2002, to revive the above-identified application.

The petition is **GRANTED**.

The above-identified application became abandoned for failure to reply within the meaning of 37CFR 1.113 in a timely manner to the final Office action mailed December 19, 2000, which set a shortened statutory period for reply of three (3) months. A three (3) months extension of time under the provisions of 37 CFR 1.136(a) was obtained. Accordingly, the application became abandoned on June 20, 2001.

37 CFR 1.137(b)(3) requires a statement that the entire delay in filing the required reply from the due date for the reply until the filing of a grantable petition pursuant to 37 CFR 1.137(b) was unintentional. If the statement contained in the instant petition varies from the language required by 37CFR 1.137(b)(3), the statement contained in the instant petition is being construed as the statement required by 37 CFR 1.137(b)(3) and petitioner must notify the Office if this is **not** a correct interpretation of the statement contained in the instant petition.

37 CFR 1.137(c) requires a terminal disclaimer dedicating to the public a terminal part of the term of any patent granted on the above-identified application or any patent granted on any continuing application that contains a specific reference under 35 U.S.C. 120, 121, or 365(c) to the above-identified application. Since the application is not a utility or plant application filed before June 8, 1995, a terminal disclaimer is not required.

The amendment filed June 18, 2002 is being construed as the submission required under 37 CFR 1.114 for the RCE filed on June 19, 2001.

Telephone inquiries concerning this decision should be directed to Cheryl Gibson-Baylor at (703)308-5111, or in her absence, Sherry Brinkley at (703)305-9220.

The application file is being forwarded to Technology Center 1600, Art Unit 1635 for processing the Request for Continued Examination under 37 CFR 1.114, previously filed on June 19, 2001.

Cheryl Gibson-Baylor
Petitions Examiner
Office of Petitions
Office of the Deputy Commissioner
for Patent Examination Policy

Sherry Brinkley
Petitions Examiner

UNITED STATES PATENT AND TRADEMARK OFFICE

Commissioner for Patents
United States Patent and Trademark Office
P.O. Box 1450
Alexandria, VA 22313-1450
www.uspto.gov

ENZO DIAGNOSTICS, INC.
C/O ENZO BIOCHEM INC.
527 MADISON AVENUE 9TH FLOOR
NEW YORK, NY 10022

COPY MAILED

MAR 1 4 2005

OFFICE OF PETITIONS

In re Application of	:	
Rabbani et al.	:	
Application No. 08/978,636	:	ON PETITION
Filed: November 25, 1997	:	
Attorney Docket No. ENZ-531037	:	

This is a decision on the petition under 37 C.F.R. § 1.137(b), filed February 17, 2005, to revive the above-identified application.

The petition is **GRANTED.**

This application became abandoned for failure to timely reply to the final Office action mailed July 15, 2004. A one-month extension of time under the provisions of 37 CFR 1.136(a) was obtained. Accordingly, this application became abandoned on November 16, 2004.

Petitioner has met the requirements to revive the above-identified application pursuant to 37 CFR 1.137(b).

This matter is being referred to Technology Center 1600 for processing of the Request for Continued Examination under 37 CFR 1.114 filed with the instant petition.

Telephone inquiries regarding this decision should be directed to the undersigned at (571) 272-3282.

Liana Chase
Petitions Examiner
Office of Petitions
Office of the Deputy Commissioner
for Patent Examination Policy

UNITED STATES PATENT AND TRADEMARK OFFICE

COMMISSIONER FOR PATENTS
UNITED STATES PATENT AND TRADEMARK OFFICE
WASHINGTON, D.C. 20231
www.uspto.gov

Paper No. 26

Enzo Diagnostics, Inc.
c/o Enzo Biochem, Inc.
527 Madison Avenue, 9th Floor
New York, NY 10022

COPY MAILED

SEP 13 2002

OFFICE OF PETITIONS

In re Application of :
Elazar Rabbani, et al. :
Application No. 08/978,637 : ON PETITION
Filed: November 25, 1997 :
Attorney Docket No. ENZ-53 (DIV-5) :

This is a decision on the petition under 37 CFR 1.137(b), filed June 18, 2002, to revive the above-identified application.

The petition is **GRANTED**.

The above-identified application became abandoned for failure to reply within the meaning of 37CFR 1.113 in a timely manner to the final Office action mailed December 19, 2000, which set a shortened statutory period for reply of three (3) months. A three (3) months extension of time under the provisions of 37 CFR 1.136(a) was obtained. Accordingly, the application became abandoned on June 20, 2001.

37 CFR 1.137(b)(3) requires a statement that the entire delay in filing the required reply from the due date for the reply until the filing of a grantable petition pursuant to 37 CFR 1.137(b) was unintentional. If the statement contained in the instant petition varies from the language required by 37CFR 1.137(b)(3), the statement contained in the instant petition is being construed as the statement required by 37 CFR 1.137(b)(3) and petitioner must notify the Office if this is **not** a correct interpretation of the statement contained in the instant petition.

37 CFR 1.137(c) requires a terminal disclaimer dedicating to the public a terminal part of the term of any patent granted on the above-identified application or any patent granted on any continuing application that contains a specific reference under 35 U.S.C. 120, 121, or 365(c) to the above-identified application. Since the application is not a utility or plant application filed before June 8, 1995, a terminal disclaimer is not required.

The amendment filed June 18, 2002 is being construed as the submission required under 37 CFR 1.114 for the RCE filed on June 19, 2001.

Telephone inquiries concerning this decision should be directed to Cheryl Gibson-Baylor at (703)308-5111, or in her absence, Sherry Brinkley at (703)305-9220.

The application file is being forwarded to Technology Center 1600, Art Unit 1635 for processing the Request for Continued Examination under 37 CFR 1.114, previously filed on June 19, 2001.

Cheryl Gibson-Baylor
Petitions Examiner
Office of Petitions
Office of the Deputy Commissioner
for Patent Examination Policy

Sherry Brinkley
Petitions Examiner

UNITED STATES PATENT AND TRADEMARK OFFICE

Commissioner for Patents
United States Patent and Trademark Office
P.O. Box 1450
Alexandria, VA 22313-1450
www.uspto.gov

In re Patent No. 6134876
Issue Date: October 24,2000
Application No. 08978812
Filed: November 26,1997
Attorney Docket No. 13DV12557

:
:DECISION GRANTING PETITION
:UNDER 37 CFR 1.378(c)
:

This is a decision on the electronic petition, filed November 5,2008 ,under 37 CFR 1.378(c) to accept the unintentionally delayed payment of the 7.5 year maintenance fee for the above-identified patent.

The petition is **GRANTED**.

The maintenance fee is accepted, and the above-identified patent reinstated as of November 5,2008 . This decision also constitutes notice that the fee has been accepted. An electronic copy of the petition and this decision has been created as an entry in the Image File Wrapper. Nevertheless, petitioner should print and retain an independent copy.

Telephone inquiries related to this electronic decision should be directed to the Electronic Business Center at 1-866-217-9197.

Under the Paperwork Reduction Act of 1995, no persons are required to respond to a collection of information unless it displays valid OMB control number.

PETITION TO ACCEPT UNINTENTIONALLY DELAYED PAYMENT OF MAINTENANCE FEE IN AN EXPIRED PATENT (37 CFR 1.378(c))

Patent Number	Issue Date (YYYY-MM-DD)	Application Number	Filing Date (YYYY-MM-DD)	Docket Number (if applicable)
6,134,876	2000-10-24	08/978,812	1997-11-26	13DV12557

CAUTION: Maintenance fee (and surcharge, if any) payment must correctly identify: (1) the patent number and (2) the application number of the actual U.S. application leading to issuance of that patent to ensure the fee(s) is/are associated with the correct patent. 37 CFR 1.366(c) and (d).

SMALL ENTITY
☐ Patentee claims, or has previously claimed, small entity status. See 37 CFR 1.27.

LOSS OF ENTITLEMENT TO SMALL ENTITY STATUS
☐ Patentee is no longer entitled to small entity status. See 37 CFR 1.27(g)

NOT Small Entity		Small Entity	
Fee	Code	Fee	Code
○ 3 ½ year	(1551)	○ 3 ½ year	(2551)
◉ 7 ½ year	(1552)	○ 7 ½ year	(2552)
○ 11 ½ year	(1553)	○ 11 ½ year	(2553)

SURCHARGE
The surcharge required by 37 CFR 1.20(i)(2) (Fee Code 1558) must be paid as a condition of accepting unintentionally delayed payment of the maintenance fee.

MAINTENANCE FEE (37 CFR 1.20(e)-(g))
The appropriate maintenance fee must be submitted with this petition.

STATEMENT
THE UNDERSIGNED CERTIFIES THAT THE DELAY IN PAYMENT OF THE MAINTENANCE FEE TO THIS PATENT WAS UNINTENTIONAL

PETITIONER(S) REQUEST THAT THE DELAYED PAYMENT OF THE MAINTENANCE FEE BE ACCEPTED AND THE PATENT REINSTATED

THIS PORTION MUST BE COMPLETED BY THE SIGNATORY OR SIGNATORIES

37 CFR 1.378(d) states: "Any petition under this section must be signed by an attorney or agent registered to practice before the Patent and Trademark Office, or by the patentee, the assignee, or other party in interest."

I certify, in accordance with 37 CFR 1.4(d)(4) that I am

◉ An attorney or agent registered to practice before the Patent and Trademark Office

○ A sole patentee

○ A joint patentee; I certify that I am authorized to sign this submission on behalf of all the other patentees.

○ A joint patentee; all of whom are signing this e-petition

○ The assignee of record of the entire interest

Patent Practitioner			
A signature of the applicant or representative is required in accordance with 37 CFR 1.33 and 10.18. Please see 37 CFR 1.4(d) for the form of the signature			
Signature	/mm52020/	Date (YYYY-MM-DD)	2008-11-05
Name	Mardson McQuay	Registration Number	52020

This collection of information is required by 37 CFR 1.378(c). The information is required to obtain or retain a benefit by the public which is to file (and by the USPTO to process) an application. Confidentiality is governed by 35 U.S.C. 122 and 37 CFR 1.11 and 1.14. This collection is estimated to take 1 hour to complete, including gathering, preparing, and submitting the completed application form to the USPTO. Time will vary depending upon the individual case. Any comments on the amount of time you require to complete this form and/ or suggestions for reducing this burden, should be sent to the Chief Information Officer, U.S. Patent and Trademark Office, U.S. Department of Commerce, P.O. Box 1450, Alexandria, VA 22313-1450. DO NOT SEND FEES OR COMPLETED FORMS TO THIS ADDRESS. **This form can only be used when in conjunction with EFS-Web. If this form is mailed to the USPTO, it may cause delays in reinstating the patent.**

Privacy Act Statement

The Privacy Act of 1974 (P.L. 93-579) requires that you be given certain information in connection with your submission of the attached form related to a patent application or patent. Accordingly, pursuant to the requirements of the Act, please be advised that: (1) the general authority for the collection of this information is 35 U.S.C. 2(b)(2); (2) furnishing of the information solicited is voluntary; and (3) the principal purpose for which the information is used by the U.S. Patent and Trademark Office is to process and/or examine your submission related to a patent application or patent. If you do not furnish the requested information, the U.S. Patent and Trademark Office may not be able to process and/or examine your submission, which may result in termination of proceedings or abandonment of the application or expiration of the patent.

The information provided by you in this form will be subject to the following routine uses:

1. The information on this form will be treated confidentially to the extent allowed under the Freedom of Information Act (5 U.S.C. 552) and the Privacy Act (5 U.S.C. 552a). Records from this system of records may be disclosed to the Department of Justice to determine whether the Freedom of Information Act requires disclosure of these record s.

2. A record from this system of records may be disclosed, as a routine use, in the course of presenting evidence to a court, magistrate, or administrative tribunal, including disclosures to opposing counsel in the course of settlement negotiations.

3. A record in this system of records may be disclosed, as a routine use, to a Member of Congress submitting a request involving an individual, to whom the record pertains, when the individual has requested assistance from the Member with respect to the subject matter of the record.

4. A record in this system of records may be disclosed, as a routine use, to a contractor of the Agency having need for the information in order to perform a contract. Recipients of information shall be required to comply with the requirements of the Privacy Act of 1974, as amended, pursuant to 5 U.S.C. 552a(m).

5. A record related to an International Application filed under the Patent Cooperation Treaty in this system of records may be disclosed, as a routine use, to the International Bureau of the World Intellectual Property Organization, pursuant to the Patent Cooperation Treaty.

6. A record in this system of records may be disclosed, as a routine use, to another federal agency for purposes of National Security review (35 U.S.C. 181) and for review pursuant to the Atomic Energy Act (42 U.S.C. 218(c)).

7. A record from this system of records may be disclosed, as a routine use, to the Administrator, General Services, or his/her designee, during an inspection of records conducted by GSA as part of that agency's responsibility to recommend improvements in records management practices and programs, under authority of 44 U.S.C. 2904 and 2906. Such disclosure shall be made in accordance with the GSA regulations governing inspection of records for this purpose, and any other relevant (i.e., GSA or Commerce) directive. Such disclosure shall not be used to make determinations about individuals.

8. A record from this system of records may be disclosed, as a routine use, to the public after either publication of the application pursuant to 35 U.S.C. 122(b) or issuance of a patent pursuant to 35 U.S.C. 151. Further, a record may be disclosed, subject to the limitations of 37 CFR 1.14, as a routine use, to the public if the record was filed in an application which became abandoned or in which the proceedings were terminated and which application is referenced by either a published application, an application open to public inspections or an issued patent.

9. A record from this system of records may be disclosed, as a routine use, to a Federal, State, or local law enforcement agency, if the USPTO becomes aware of a violation or potential violation of law or regulation.

UNITED STATES PATENT AND TRADEMARK OFFICE

Commissioner for Patents
United States Patent and Trademark Office
P.O. Box 1450
Alexandria, VA 22313-1450
www.uspto.gov

In re Patent No. 6209188
Issue Date: April 3,2001
Application No. 08978980
Filed: November 26,1997
Attorney Docket No. C-238D

:
:DECISION GRANTING PETITION
:UNDER 37 CFR 1.378(c)
:

This is a decision on the electronic petition, filed November 28,2006 ,under 37 CFR 1.378(c) to accept the unintentionally delayed payment of the 3.5 year maintenance fee for the above-identified patent.

The petition is GRANTED.

The maintenance fee is accepted, and the above-identified patent reinstated as of November 28,2006. This decision also constitutes notice that the fee has been accepted. An electronic copy of the petition and this decision has been created as an entry in an Image File Wrapper. Nevertheless, petitioner should print and retain an independent copy

Telephone inquires related to this electronic decision should be directed to the Electronic Business Center at 1-866-217-9197.

Under the Paperwork Reduction Act of 1995, no persons are required to respond to a collection of information unless it displays valid OMB control number.

PETITION TO ACCEPT UNINTENTIONALLY DELAYED PAYMENT OF MAINTENANCE FEE IN AN EXPIRED PATENT (37 CFR 1.378(c))

Patent Number	Issue Date (YYYY-MM-DD)	Application Number	Filing Date (YYYY-MM-DD)	Docket Number (if applicable)
6209188	2001-04-03	08978980	1997-11-26	C-238D

CAUTION: Maintenance fee (and surcharge, if any) payment must correctly identify: (1) the patent number and (2) the application number of the actual U.S. application leading to issuance of that patent to ensure the fee(s) is/are associated with the correct patent. 37 CFR 1.366(c) and (d).

SMALL ENTITY
☒ Patentee claims, or has previously claimed, small entity status. See 37 CFR 1.27.

LOSS OF ENTITLEMENT TO SMALL ENTITY STATUS
☐ Patentee is no longer entitled to small entity status. See 37 CFR 1.27(g)

NOT Small Entity		Small Entity	
Fee	Code	Fee	Code
○ 3 ½ year	(1551)	◉ 3 ½ year	(2551)
○ 7 ½ year	(1552)	○ 7 ½ year	(2552)
○ 11 ½ year	(1553)	○ 11 ½ year	(2553)

SURCHARGE
The surcharge required by 37 CFR 1.20(i)(2) (Fee Code 1558) must be paid as a condition of accepting unintentionally delayed payment of the maintenance fee.

MAINTENANCE FEE (37 CFR 1.20(e)-(g))
The appropriate maintenance fee must be submitted with this petition.

STATEMENT
THE UNDERSIGNED CERTIFIES THAT THE DELAY IN PAYMENT OF THE MAINTENANCE FEE TO THIS PATENT WAS UNINTENTIONAL

PETITIONER(S) REQUEST THAT THE DELAYED PAYMENT OF THE MAINTENANCE FEE BE ACCEPTED AND THE PATENT REINSTATED

THIS PORTION MUST BE COMPLETED BY THE SIGNATORY OR SIGNATORIES

37 CFR 1.378(d) states: "Any petition under this section must be signed by an attorney or agent registered to practice before the Patent and Trademark Office, or by the patentee, the assignee, or other party in interest."

I certify, in accordance with 37 CFR 1.4(d)(4) that I am

◉ An attorney or agent registered to practice before the Patent and Trademark Office

○ A sole patentee

○ A joint patentee; I certify that I am authorized to sign this submission on behalf of all the other patentees.

○ A joint patentee; all of whom are signing this e-petition

○ The assignee of record of the entire interest

Patent Practitioner			
A signature of the applicant or representative is required in accordance with 37 CFR 1.33 and 10.18. Please see 37 CFR 1.4(d) for the form of the signature			
Signature	/james h walters/	Date (YYYY-MM-DD)	2006-11-28
Name	James H. Walters	Registration Number	35731

This collection of information is required by 37 CFR 1.378(c). The information is required to obtain or retain a benefit by the public which is to file (and by the USPTO to process) an application. Confidentiality is governed by 35 U.S.C. 122 and 37 CFR 1.11 and 1.14. This collection is estimated to take 1 hour to complete, including gathering, preparing, and submitting the completed application form to the USPTO. Time will vary depending upon the individual case. Any comments on the amount of time you require to complete this form and/ or suggestions for reducing this burden, should be sent to the Chief Information Officer, U.S. Patent and Trademark Office, U.S. Department of Commerce, P.O. Box 1450, Alexandria, VA 22313-1450. DO NOT SEND FEES OR COMPLETED FORMS TO THIS ADDRESS. **This form can only be used when in conjunction with EFS-Web. If this form is mailed to the USPTO, it may cause delays in reinstating the patent.**

Privacy Act Statement

The Privacy Act of 1974 (P.L. 93-579) requires that you be given certain information in connection with your submission of the attached form related to a patent application or patent. Accordingly, pursuant to the requirements of the Act, please be advised that: (1) the general authority for the collection of this information is 35 U.S.C. 2(b)(2); (2) furnishing of the information solicited is voluntary; and (3) the principal purpose for which the information is used by the U.S. Patent and Trademark Office is to process and/or examine your submission related to a patent application or patent. If you do not furnish the requested information, the U.S. Patent and Trademark Office may not be able to process and/or examine your submission, which may result in termination of proceedings or abandonment of the application or expiration of the patent.

The information provided by you in this form will be subject to the following routine uses:

1. The information on this form will be treated confidentially to the extent allowed under the Freedom of Information Act (5 U.S.C. 552) and the Privacy Act (5 U.S.C. 552a). Records from this system of records may be disclosed to the Department of Justice to determine whether the Freedom of Information Act requires disclosure of these record s.

2. A record from this system of records may be disclosed, as a routine use, in the course of presenting evidence to a court, magistrate, or administrative tribunal, including disclosures to opposing counsel in the course of settlement negotiations.

3. A record in this system of records may be disclosed, as a routine use, to a Member of Congress submitting a request involving an individual, to whom the record pertains, when the individual has requested assistance from the Member with respect to the subject matter of the record.

4. A record in this system of records may be disclosed, as a routine use, to a contractor of the Agency having need for the information in order to perform a contract. Recipients of information shall be required to comply with the requirements of the Privacy Act of 1974, as amended, pursuant to 5 U.S.C. 552a(m).

5. A record related to an International Application filed under the Patent Cooperation Treaty in this system of records may be disclosed, as a routine use, to the International Bureau of the World Intellectual Property Organization, pursuant to the Patent Cooperation Treaty.

6. A record in this system of records may be disclosed, as a routine use, to another federal agency for purposes of National Security review (35 U.S.C. 181) and for review pursuant to the Atomic Energy Act (42 U.S.C. 218(c)).

7. A record from this system of records may be disclosed, as a routine use, to the Administrator, General Services, or his/her designee, during an inspection of records conducted by GSA as part of that agency's responsibility to recommend improvements in records management practices and programs, under authority of 44 U.S.C. 2904 and 2906. Such disclosure shall be made in accordance with the GSA regulations governing inspection of records for this purpose, and any other relevant (i.e., GSA or Commerce) directive. Such disclosure shall not be used to make determinations about individuals.

8. A record from this system of records may be disclosed, as a routine use, to the public after either publication of the application pursuant to 35 U.S.C. 122(b) or issuance of a patent pursuant to 35 U.S.C. 151. Further, a record may be disclosed, subject to the limitations of 37 CFR 1.14, as a routine use, to the public if the record was filed in an application which became abandoned or in which the proceedings were terminated and which application is referenced by either a published application, an application open to public inspections or an issued patent.

9. A record from this system of records may be disclosed, as a routine use, to a Federal, State, or local law enforcement agency, if the USPTO becomes aware of a violation or potential violation of law or regulation.

UNITED STATES PATENT AND TRADEMARK OFFICE

UNDER SECRETARY OF COMMERCE FOR INTELLECTUAL PROPERTY AND
DIRECTOR OF THE UNITED STATES PATENT AND TRADEMARK OFFICE
WASHINGTON, DC 20231
www.uspto.gov

AUG 7 2002

Kenneth I Kohn
Kohn and Associates
Suite 410
30500 Northwestern Highway
Farmington Hills MI 48334

Paper No. 25

In re Application of Bernard F. Grisoni Serial No. : 08/979,097 Filed : November 26, 1997 For : Monolithic Implants with Openings	: DECISION ON PETITION : TO WITHDRAW : HOLDING OF : ABANDONMENT :

This is a decision on petitioner's request filed via facsimile transmission June 25, 2002 to review the holding of abandonment mailed June 18, 2002 for failure to file a Brief within the required period. There is no fee required for this petition.

In support of the request, petitioner has submitted a copy of a PTO stamped receipt dated May 20, 2002 to show that a Brief was timely filed. Although normally, a full copy of the response in question is required (in this instance, a copy of the Brief and of the extension of time request), one will not be required in the instant situation because the original communication has been found and matched with the file. Further, since the Brief was filed May 20, 2002 (the day of receipt as well as the date on the certificate of mailing), a five-month extension of time was needed rather than the four-month extension that was requested and paid for. Accordingly, in view of the general authorization to charge any fee in connection with the May 20, 2002 communication given on the last page of such communication, the necessary fee of $160.00 for extension for response within the fifth month will be charged to Deposit Account No. 11-1449.

In view of the above, the Notice of Abandonment mailed June 18, 2002 is in error and is hereby vacated. The holding of abandonment is withdrawn. Upon the mailing of this decision, the application will be forwarded to the Examiner via the Legal Instruments Examiner for processing and consideration of the Brief filed May 20, 2002.

Summary: Holding of Abandonment Withdrawn.
Extension of time fee charged to Deposit Account No. 11-1449

John E. Kittle, Director
Groups 3730 and 3760
Phone: (703) 308-0873

ak/7/25/02

UNITED STATES PATENT AND TRADEMARK OFFICE

Commissioner for Patents
United States Patent and Trademark Office
P.O. Box 1450
Alexandria, VA 22313-1450
www.uspto.gov

JJGJR.: 06-06

Paper No: __

KOHN & ASSOCIATES PLLC
30500 NORTHWESTERN HWY
STE 410
FARMINGTON HILLS MI 48334

COPY MAILED
JUN 27 2006
OFFICE OF PETITIONS

In re Application of :
Girsoni :
Application No.: 08/979,097 :
Filing Date: 26 November, 1997 :
Attorney Docket No. 0243.00004(B :

DECISION

This is a decision on the petition filed on 16 November, 2005, to withdraw the holding of abandonment and considered under 37 C.F.R. §1.181, and on 21 April, 2006, to revive the application as having been abandoned due to unavoidable delay and considered under 37 C.F.R. §1.137(a).

For the reasons set forth below the petition as considered under 37 C.F.R. §1.181 **GRANTED**, and the petition under 37 C.F.R. §1.137(a) is **DISMISSED**.

BACKGROUND

The record reflects that:

- Petitioner failed to reply timely and properly to the Notice of Allowance/Allowability and Fees Due mailed on 3 December, 2004, with reply due under a non-extendable deadline on or before 3 March, 2005;
- the instant application went abandoned after midnight 3 March, 2005;
- the Office mailed a Supplemental Notice of Allowance/Allowability and Fees Due on 9 June, 2005, however, there was no alteration of the original reply deadline;

- the Office mailed the Notice of Abandonment on 26 October, 2005;

- on 16 November, 2005, Petitioner filed the instant petition seeking withdrawal of the holding of abandonment, averred timely filing of the Fees Due via U.S. Postal Service (USPS) Express Mail under Label No.EV571723884US, provided copies averred to be true copies of the Date-In (("2 15 05") USPS Express Mail Label No.EV571723884US, the receipt card listing inter alia the Fee Transmittal and Check No. 2228 in the amount of $706.00 and bearing USPS Express Mail Label No.EV571723884US and finally date stamped ("NOV 16 2005") by the Office a certificate of mailing dated "2-15-05," and a copy of the Fee Transmittal referencing not only the attached check by number and amount but also authorizing the Office to charge any deficiency to Deposit Account No. 11-1449–notably, a request by the Office to the USPS Track and Confirm system indicated the following regarding the package bearing USPS Express Mail Label No.EV571723884US: "ACCEPTANCE FRRAMINGTON MI 48333 02/15/05 5:05 p.m.," a copy of which has been obtained to be entered into the record herein;[1]

- on 21 April, 2006, apparently out of an abundance of caution, Petitioner also filed the instant petition under 37 C.F.R. §1.137(a) seeking revival of the instant application as having been abandoned due to unavoidable delay, with essentially the same showing as set forth above;

- out of an abundance of caution, Petitioners always are reminded that the filing of a petition under 37 C.F.R. §1.181 does not toll any periods that may be running any action by the Office and a petition seeking relief under the regulation must be filed within two (2) months of the act complained of (see: 37 C.F.R. §1.181(f)), and those registered to practice *and* all others who make representations before the Office are reminded to inquire into the underlying facts of representations made to the Office and support averments with the appropriate documentation–since all owe to the Office the continuing duty to disclose.[2]

---

[1] Petitioner will find it a wise practice to run an inquiry USPS Track and Confirm system a couple of days after the expected delivery of a USPS Express Mail package, and then print out and retain the inquiry results.

[2] See supplement of 17 June, 1999. The Patent and Trademark Office is relying on petitioner's duty of candor and good faith and accepting a statement made by Petitioner. See Changes to Patent Practice and Procedure, 62 Fed. Reg. at 53160 and 53178, 1203 Off. Gaz. Pat. Office at 88 and 103 (responses to comments 64 and 109)(applicant obligated under 37 C.F.R. §10.18 to inquire into the underlying facts and circumstances when providing statements to the Patent and Trademark Office).

Specifically, the regulations at 37 C.F.R. §10.18 provide:

§ 10.18 Signature and certificate for correspondence filed in the Patent and Trademark Office.
(a) For all documents filed in the Office in patent, trademark, and other non-patent matters, except for correspondence that is required to be signed by the applicant or party, each piece of correspondence filed by a practitioner in the Patent and Trademark Office must bear a signature by such practitioner complying with the provisions of §1.4(d), §1.4(e), or § 2.193(c)(1) of this chapter.
(b) By presenting to the Office (whether by signing, filing, submitting, or later advocating) any paper, the party presenting such paper, whether a

STATUTES, REGULATIONS AND ANALYSIS

Congress has authorized the Commissioner to "revive an application if the delay is shown to the satisfaction of the Commissioner to have been "unavoidable." 35 U.S.C. §133 (1994).[3]

The regulations at 37 C.F.R. §1.137(a) and (b) set forth the requirements for a petitioner to revive a previously unavoidably or unintentionally, respectively, abandoned application under this congressional grant of authority. The language of 35 U.S.C. §133 and 37 C.F.R. §1.137(a) is clear, unambiguous, and without qualification: the delay in tendering the reply to the outstanding Office action, as well as filing the first petition seeking revival, must have been unavoidable for the reply now to be accepted on petition.[4]

---

practitioner or non-practitioner, is certifying that—

(1) All statements made therein of the party's own knowledge are true, all statements made therein on information and belief are believed to be true, and all statements made therein are made with the knowledge that whoever, in any matter within the jurisdiction of the Patent and Trademark Office, knowingly and willfully falsifies, conceals, or covers up by any trick, scheme, or device a material fact, or makes any false, fictitious or fraudulent statements or representations, or makes or uses any false writing or document knowing the same to contain any false, fictitious or fraudulent statement or entry, shall be subject to the penalties set forth under 18 U.S.C. 1001, and that violations of this paragraph may jeopardize the validity of the application or document, or the validity or enforceability of any patent, trademark registration, or certificate resulting therefrom; and

(2) To the best of the party's knowledge, information and belief, formed after an inquiry reasonable under the circumstances, that —

(i) The paper is not being presented for any improper purpose, such as to harass someone or to cause unnecessary delay or needless increase in the cost of prosecution before the Office;

(ii) The claims and other legal contentions therein are warranted by existing law or by a nonfrivolous argument for the extension, modification, or reversal of existing law or the establishment of new law;

(iii) The allegations and other factual contentions have evidentiary support or, if specifically so identified, are likely to have evidentiary support after a reasonable opportunity for further investigation or discovery; and

(iv) The denials of factual contentions are warranted on the evidence, or if specifically so identified, are reasonably based on a lack of information or belief.

(c) Violations of paragraph (b)(1) of this section by a practitioner or non-practitioner may jeopardize the validity of the application or document, or the validity or enforceability of any patent, trademark registration, or certificate resulting therefrom. Violations of any of paragraphs (b)(2)(i) through (iv) of this section are, after notice and reasonable opportunity to respond, subject to such sanctions as deemed appropriate by the Commissioner, or the Commissioner's designee, which may include, but are not limited to, any combination of —

(1) Holding certain facts to have been established;

(2) Returning papers;

(3) Precluding a party from filing a paper, or presenting or contesting an issue;

(4) Imposing a monetary sanction;

(5) Requiring a terminal disclaimer for the period of the delay; or

(6) Terminating the proceedings in the Patent and Trademark Office.

(d) Any practitioner violating the provisions of this section may also be subject to disciplinary action. See § 10.23(c)(15).

[Added 50 FR 5175, Feb. 6, 1985, effective Mar. 8, 1985; para. (a) revised, 58 FR 54494, Oct. 22, 1993, effective Nov. 22, 1993; paras. (a) & (b) revised, paras. (c) & (d) added, 62 FR 53131, Oct. 10, 1997, effective Dec. 1, 1997; para. (a) revised, 69 FR 56481, Sept. 21, 2004, effective Oct. 21, 2004]

[3] 35 U.S.C. §133 provides:

35 U.S.C. §133 Time for prosecuting application.

Upon failure of the applicant to prosecute the application within six months after any action therein, of which notice has been given or mailed to the applicant, or within such shorter time, not less than thirty days, as fixed by the Commissioner in such action, the application shall be regarded as abandoned by the parties thereto, unless it be shown to the satisfaction of the Commissioner that such delay was unavoidable.

[4] Therefore, by example, an unavoidable delay in the payment of the Filing Fee might occur if a reply is shipped by the US Postal Service, but due to catastrophic accident, the delivery is not made.

Delays in responding properly raise the question whether delays are unavoidable.[5] Where there is a question whether the delay was unavoidable, Petitioners must meet the burden of establishing that the delay was unavoidable within the meaning of 35 U.S.C. §133 and 37 C.F.R. §1.137(a).[6] And the Petitioner must be diligent in attending to the matter.[7] Failure to do so does not constitute the care required under Pratt, and so cannot satisfy the test for diligence and due care.

(By contrast, unintentional delays are those that do not satisfy the very strict statutory and regulatory requirements of unavoidable delay, and also, by definition, are not intentional.[8]))

Withdraw the Holding of Abandonment

The courts have determined the construct for properly supporting a petition seeking withdrawal of a holding of abandonment.[9]

The commentary at MPEP §711.03(c) provides:

* * *

> **B. Petition To Withdraw Holding of Abandonment Based on Evidence That a Reply Was Timely Mailed or Filed**
>
> 37 C.F.R. §1.10(c) through §1.10(e) and §1.10(g) set forth procedures for petitioning the Director of the USPTO to accord a filing date to correspondence as of the date of deposit of the correspondence as "Express Mail." A petition to withdraw the holding of abandonment relying upon a timely reply placed in "Express Mail" must include an appropriate petition under 37 C.F.R. §1.10(c), (d), * (e), or (g) (see MPEP § 513). When a paper is shown to have been mailed to the Office using the "Express Mail" procedures, the paper must be entered in PALM with the "Express Mail" date.

---

[5] See: *Changes to Patent Practice and Procedure; Final Rule Notice*, 62 *Fed. Reg.* at 53158-59 (October 10, 1997), 1203 *Off. Gaz. Pat. Office* at 86-87 (October 21, 1997).

[6] See: In re Application of G, 11 USPQ2d 1378, 1380 (Comm'r Pats. 1989).

[7] See: Diligence in Filing Petitions to Revive and Petitions to Withdraw the Holding of Abandonment, 1124 Off. Gaz. Pat. Office 33 (March 19, 1991). It was and is Petitioner's burden to exercise diligence in seeking either to have the holding of abandonment withdrawn or the application revived. See 1124 Off. Gaz. Pat. Office supra.

[8] Therefore, by example, an unintentional delay in the reply might occur if the reply and transmittal form are to be prepared for shipment by the US Postal Service, but other pressing matters distract one's attention and the mail is not timely deposited for shipment.

[9] See: Delgar v. Schulyer, 172 USPQ 513 (D.D.C. 1971).

Similarly, applicants may establish that a reply was filed with a postcard receipt that properly identifies the reply and provides *prima facie* evidence that the reply was timely filed. See MPEP § 503. For example, if the application has been held abandoned for failure to file a reply to a first Office action, and applicant has a postcard receipt showing that an amendment was timely filed in response to the Office action, then the holding of abandonment should be withdrawn upon the filing of a petition to withdraw the holding of abandonment. When the reply is shown to have been timely filed based on a postcard receipt, the reply must be entered into PALM using the date of receipt of the reply as shown on the post card receipt.

Where a certificate of mailing under 37 C.F.R. §1.8, but not a postcard receipt, is relied upon in a petition to withdraw the holding of abandonment, see 37 C.F.R. §1.8(b) and MPEP § 512. As stated in 37 C.F.R §1.8(b)(3) the statement that attests to the previous timely mailing or transmission of the correspondence must be on a personal knowledge basis, or to the satisfaction of the Director of the USPTO. If the statement attesting to the previous timely mailing is not made by the person who signed the Certificate of Mailing (i.e., there is no personal knowledge basis), then the statement attesting to the previous timely mailing should include evidence that supports the conclusion that the correspondence was actually mailed (e.g., copies of a mailing log establishing that correspondence was mailed for that application). When the correspondence is shown to have been timely filed based on a certificate of mailing, the correspondence is entered into PALM with the actual date of receipt (i.e., the date that the duplicate copy of the papers was filed with the statement under 37 C.F.R. §1.8).

37 C.F.R. §1.8(b) also permits applicant to notify the Office of a previous mailing or transmission of correspondence and submit a statement under 37 C.F.R. 1.8(b)(3) accompanied by a duplicate copy of the correspondence when a reasonable amount of time (e.g., more than one month) has elapsed from the time of mailing or transmitting of the correspondence. Applicant does not have to wait until the application becomes abandoned before notifying the Office of the previous mailing or transmission of the correspondence. Applicant should check the private Patent Application Information Retrieval (PAIR) system for the status of

the correspondence before notifying the Office. See MPEP § 512.

* * *

And the regulation requires that relief be sought within two (2) months of the act complained of.

As of this writing Petitioner appears to have satisfied the showing and timing requirements described above.

Allegations as to
Unavoidable Delay

The requirements for a grantable petition under 37 C.F.R. §1.137(b) are the petition and fee, a statement/showing of unintentional delay, a proper reply, and–where appropriate--a terminal disclaimer and fee.

The requirements for relief under the provisions of 37 C.F.R. §1.137(b) are: petition, fee, reply, showing of unavoidable delay, and–where appropriate–a terminal disclaimer and fee.

It appears that the issue is moot.

CONCLUSION

Because Petitioner has not satisfied the burdens set forth in Delgar v. Schulyer, the petition as considered under 37 C.F.R. §1.181 is **granted**, and the petition under 37 C.F.R. §1.137(a) is **dismissed as moot**.

The authorization for Fees Due being present in the file, the instant application is released to Publications Branch to be processed into a patent in due course.

Telephone inquiries concerning this decision may be directed to the undersigned at (571) 272-3214.

John J. Gillon, Jr.
Senior Attorney
Office of Petitions

ENCLS

UNITED STATES PATENT AND TRADEMARK OFFICE

COMMISSIONER FOR PATENTS
UNITED STATES PATENT AND TRADEMARK OFFICE
WASHINGTON, D.C. 20231
www.uspto.gov

Paper No. 20

A. Bruce Clay
IBM Corporation
Intellectual Property Law
3039 Cornwallis Road
Research Triangle Park, North Carolina 27709

MAILED

MAR 1 5 2002

Technology Center 2100

In re Application of: Jay Unger et al.	)	
Application No.: 08/980,024	)	**DECISION ON PETITION**
Filed: November 26, 1997	)	**UNDER 37 C.F.R. § 1.181 TO**
For: COMPILED STRUCTURE FOR	)	**RESET PERIOD FOR REPLY**
EFFICIENT OPERATION OF	)	**DUE TO LATE RECEIPT**
DISTRIBUTED HYPERTEXT	)	

This is a decision on the petition under 37 CFR 1.181 filed on March 5, 2002 requesting that the period for reply set forth in the Office communication mailed on January 10, 2002 be reset.

The petition states that the correspondence from the USPTO was received on February 28, 2002 and includes a copy of the Office action cover sheet with a Received date of February 28, 2002 stamped thereon. The practitioner explains that mail from the USPTO received by the assignee is date stamped by with the date of receipt and therefore the stamp establishes the actual date of receipt.

The Following is an excerpt of MPEP § 710.06 which is relevant to this petition:

> PETITIONS TO RESET A PERIOD FOR REPLY DUE TO LATE RECEIPT OF AN OFFICE ACTION
>
> The Office will grant a petition to restart the previously set period for reply to an Office action to run from the date of receipt of the Office action at the correspondence address when the following criteria are met:
>
> (1) the petition is filed within 2 weeks of the date of receipt of the Office action at the correspondence address;
>
> (2) a substantial portion of the set reply period had elapsed on the date of receipt (e.g., at least 1 month of a 2 - or 3 - month response period had elapsed); and
>
> (3) the petition includes (a) evidence showing the date of receipt of the Office action at the correspondence address (e.g., a copy of the Office action having the date of receipt of the Office action at the correspondence address stamped thereon, a copy of the envelope (which contained the Office action) having the date of receipt of the Office action at the correspondence address stamped thereon, etc.), and (b) a statement setting forth the date of receipt of the Office

action at the correspondence address and explaining how the evidence being presented establishes the date of receipt of the Office action at the correspondence address.

Petitioner has met the requirements for a restart of a period of response due to late receipt of an Office action. Accordingly, The petition is **GRANTED**.

The shortened statutory period that was originally set forth in the Office communication originally mailed on January 10, 2002 is hereby reset to **EXPIRE ON THE RECEIPT DATE OF** February 28, 2002.

As a result, a Response filed on the 6 month statutory date of 11 April 2002 would only require a 2 month extension of time.

for Margaret A. Focarino, Group Director
Technology Center 2100
Computer Architecture, Software, and Electronic Commerce

NOTICE RE: CERTIFICATES OF CORRECTION

DATE : 05/10/02 1646 Paper No.: 18

TO : Supervisor, Art Unit 1600

SUBJECT : Certificate of Correction Request in Patent No.: 6,018,026

A response to the following question is requested with respect to the accompanying request for a certific of correction.

With respect to the change(s) requested, correcting Office and/or Applicant's errors, should the patent read as shown in the certificate of correction? No new matter should be introduced, nor should tl scope or meaning of the claims be changed.

PLEASE COMPLETE THIS FORM AND
RETURN WITH FILE, WITHIN 7 DAYS,
TO CERTIFICATES OF CORRECTION BRANCH - PK 3-915/922
PALM LOCATION 7580 - TEL. N0. 305-8309

THANK YOU FOR YOUR ASSISTANCE!

Note your decision, regarding the changes requested in the Request for Certificate of Correction, l placing a check mark (+) in the box that reflects your decision, which corresponds to the question checke above.

☒ **YES** ☐ **NO** ☐ **Comments below**

☐ **Comments:**

Gary L. Kunz
Supervisor

1647
Art Unit

SPE: S. Allen

SPE RESPONSE FOR CERTIFICATE OF CORRECTION

Paper No.: _____

DATE : 12/16/08

TO SPE OF : ART UNIT 2872

SUBJECT : Request for Certificate of Correction for Appl. No.: 08980885 Patent No.: 6206525 B1

Please respond to this request for a certificate of correction within 7 days.

FOR IFW FILES:

Please review the requested changes/corrections as shown in the **COCIN** document(s) in the IFW application image. No new matter should be introduced, nor should the scope or meaning of the claims be changed.

Please complete the response (see below) and forward the completed response to scanning using document code **COCX**.

FOR PAPER FILES:

Please review the requested changes/corrections as shown in the attached certificate of correction. Please complete this form (see below) and forward it with the file to:

Certificates of Correction Branch (CofC)
South Tower - 9A22
Palm Location 7580
You can fax the Directors/SPE response to 571-270-9990

_____
Certificates of Correction Branch
703-308-9390 ext. _____

Thank You For Your Assistance

The request for issuing the above-identified correction(s) is hereby:
Note your decision on the appropriate box.

J.P. 1/8/09

- [X] **Approved** — **All** changes apply.
- [ ] **Approved in Part** — Specify below which changes **do not** apply.
- [ ] **Denied** — State the reasons for denial below.

Comments: _____

Stephone B. Allen
Supervisory Patent Examiner

Stephone Allen 2872 1/8/09

SPE RESPONSE FOR CERTIFICATE OF CORRECTION

SPE Art Unit

UNITED STATES
PATENT AND
TRADEMARK OFFICE

UNDER SECRETARY OF COMMERCE FOR INTELLECTUAL PROPERTY
AND DIRECTOR OF THE UNITED STATES PATENT AND TRADEMARK OFFICE
WASHINGTON, D.C. 20231
WWW.USPTO.GOV

AUG 10 2001

#20

NIXON & VANDERHYDE P.C
1100 NORTH GLEBE ROAD, 8TH FL.
ARLINGTON , VA 22201-4714

In re Application of	:
Michael J. Elmore et al	:
Serial No.: 08/981,087	: PETITION DECISION
Filed: May 27, 1998	:
Attorney Docket No.: 124-688	:

This is in response to applicants' petition under 37 CFR 1.181, which is being treated as a petition under 37 CFR 1.144, filed January 7, 2000, requesting withdrawal of an improper Lack of Unity requirement. The delay in acting on this petition is regretted, however the petition was only recently brought to the attention of the deciding official.

A review of the file history shows that this application was filed under 35 U.S.C. 371 as the National Phase of PCT/GB96/01409 on December 12, 1997, and accorded a filing date when all required elements were filed on May 27, 1998. The examiner upon taking the application up for examination mailed a Sequence compliance requirement letter accompanied by a Lack of Unity requirement to applicants on June 16, 1999, setting forth two groups of inventions, as follows:

Group I - claims 1-12 and 19-24, drawn to polypeptides free of botulinum toxin activity, the polypeptide composition and vaccine comprising the polypeptide;
Group II - claims 13-18 and 25, drawn to recombinant DNA encoding a polypeptide and method of producing same.

The examiner reasoned that the two groups lacked a corresponding special technical feature and further that they have different structural and biological properties in that Group I is directed to acids (polypeptides) and Group II is directed to nucleotides. The examiner also noted that the polypeptide did not make a contribution over the prior art referencing Current Microbiology 29:69-77 (1994) as evidence that the polypeptide is known. Applicants replied on September 14, 1999, electing with traverse Group I and arguing that the International Search Report found no Lack of Unity. In a new Office action, mailed October 7, 1999, the examiner maintained the Lack of Unity for the reasons previously set forth and made the requirement Final. The examiner also rejected the claims under 35 U.S.C. 101, 35 U.S.C. 102(b) and 35 U.S.C. 112, first and second paragraphs. Applicants replied on January 7, 2000, amending a number of claims and traversing the Lack of Unity requirement based on Example 17 of the PCT Administrative Instructions, Annex B, which indicates that a protein and the DNA sequence encoding the protein are considered to have unity of invention. This petition was concurrently filed. In a non-Final Office action mailed March 16, 2000, the examiner maintained the Lack of Unity requirement for the

same reasons as before reiterating that the polypeptide does not make a contribution over the prior art as evidenced by the Current Microbiology reference cited previously and therefor unity is lacking between the polypeptide and the protein encoded thereby. The examiner further rejected the elected claims under 35 U.S.C. 101, 35 U.S.C. 112, first and second paragraphs, and 35 U.S.C. 102(a) and 103(b). As new rejections were made, the action was not made Final. Applicants replied on June 16, 2000, amending several claims, canceling claims 1-2 and adding claim 26. Applicants also requested an immediate decision on the petition filed with the previous response with regard to the Lack of Unity requirement. A supplemental amendment was filed June 19, 2000, adding claims 27-33. On February 27, 2001, the examiner mailed a Notice to Comply with Sequence requirements by supplying SEQ ID NOs in the claims. Applicants replied on March 27, 2001, by amending those claims containing sequences by adding SEQ ID NOs. On June 5, 2001, the examiner mailed a Final Office action to applicants in which the restriction requirement was maintained and the elected claims were rejected under 35 U.S.C. 112, first and second paragraphs, and 35 U.S.C. 102(a) and 102(b) over various references. Subsequent to the mailing of the Office action the application was forwarded for decision on the petition.

DISCUSSION

Restriction/Lack of Unity requirements in National Phase applications filed under 35 U.S.C. 371 are governed by application of PCT Rule 13.1 and 13.2 which are further explained in Annex B of the Administrative Instructions. In traversing the requirement applicants cite M.P.E.P. 1893.03(d), in part. The third paragraph quoted is as follows:

> The principles of unity of invention are used to determine the types of claimed subject matter and the combinations of claims to different categories of invention that are permitted to be included in a single international or national stage patent application. The basic principle is that an application should relate to only one invention or, if there is more than one invention, that applicant would have a right to include in a single application only those inventions which are so linked as to form a single general inventive concept. A group of inventions is considered linked to form a single general inventive concept where there is a technical relationship among the inventions that involves at least one common or corresponding special technical feature. **The expression special technical features is defined as meaning those technical features that define the contribution which each claimed invention, considered as a whole, makes over the prior art.** For example, a corresponding technical feature is exemplified by a key defined by certain claimed structural characteristics which correspond to the claimed features of a lock to be used with the claimed key. Note also examples 1-17 of Annex B Part 2 of the PCT Administrative Instructions as amended July 1, 1992 contained in Appendix AI of the MPEP.

This mirrors part (b) of Annex B, which reads as follows:

> (b) Technical Relationship. Rule 13.2 defines the method for determining whether the requirement of unity of invention is satisfied in respect of a group of inventions claimed in an international application. Unity of invention exists only when there is a technical relationship among the claimed inventions involving one or more of the same or corresponding special technical features. **The expression special technical features is defined in Rule 13.2 as meaning those technical features that define a contribution which each of the inventions, considered as a whole, makes over the prior art.** The determination is made on the contents of the claims as interpreted in light of the description and drawings (if any).

Applicants also reference and quote from Example 17 of Annex B, as follows:

> Expression of the DNA sequence in a host results in the production of a protein which is determined by the DNA sequence. **The protein and the DNA sequence exhibit corresp nding special technical features.**

Note the highlighted portions of the above three citations. It is clearly stated in the first two citations that the "special technical feature" is that which makes a contribution over the prior art (i.e. is novel or unobvious). Also the same special technical features must be present or a part of each of the inventions in order for Unity to be found. In the quote from example 17 Unity is based on the finding of corresponding "special technical features" which define over the prior art. If this were not so, there would be no Unity.

In the above identified application the examiner has made a holding of Lack of Unity between the polypeptide and the DNA encoding the polypeptide based on evidence that the polypeptide is known and thus does not make a contribution over the prior art. As evidence that the polypeptide does not make a contribution over the prior art, the article in Current Microbiology is initially cited. In subsequent Office actions other patent and literature references are cited showing that the polypeptide is known. Thus the polypeptide which is the special technical feature which is common to each invention does not make a contribution over the prior art. In view of this showing by the examiner it must be concluded that Unity is Lacking. With respect to applicants's argument that no Lack of Unity was found in the International Phase, PCT Rules allow review of any Unity or Lack of Unity holding at each stage of prosecution. The determination may, therefore, change with each Office action depending on the prior art discovered and applicants' actions. Such is no different from restriction practice in regularly filed applications where the examiner reviews the restriction requirement for correctness with each Office action. It should also be noted that even when there is not Unity in a PCT application inventions which lack Unity may continue to be searched and/or examined together.

DECISION

Applicants' petition is **DENIED** for the reasons set forth above

Any request for reconsideration of this decision or a renewed petition must be filed within TWO MONTHS of the mailing date of this decision in order to be considered timely and must be directed to the Assistant Commissioner of Patents.

Should there be any questions with respect to this decision, please contact William R. Dixon, Jr., by mail addressed to: Director, Technology Center 1600, Washington, D.C. 20231, or by telephone at (703)308-3824 or by facsimile transmission at (703) 305-7230.

Jasemine C. Chambers

Jasemine C. Chambers
Director, Technology Center 1600

UNITED STATES
PATENT AND
TRADEMARK OFFICE

UNDER SECRETARY OF COMMERCE FOR INTELLECTUAL PROPERTY AND
DIRECTOR OF THE UNITED STATES PATENT AND TRADEMARK OFFICE
WASHINGTON, D.C. 20231
WWW.USPTO.GOV

AUG 1 2002

#28

B.J. SADOFF
NIXON & VANDERHYE, P.C.
1100 NORTH GLEBE ROAD, 8TH FLOOR
ARLINGTON, VA 22201-4714

In re Application of	:
ELMORE et al	:
Serial No. 08/981,087	: DECISION ON PETITION
371 Filing Date: 27 May 1998	:
Attorney Docket No. 1498-133	:

This letter is in response to the Petition under 37 CFR 1.144, filed 5 October 2001. The delay in acting upon this petition is regretted.

BACKGROUND

This application was filed on 27 May 1998, under 35 U.S.C. 371 as the national stage filing of PCT/GB96/01409, filed 12 December 1997, which claims priority to GB serial number 9511909.5, filed 12 June 1995.

A review of the file history shows that original claims 1-25 were directed a polypeptide free of botulism toxin activity and free of toxoid which induces protective immunity to a type F botulism toxin, pharmaceutical compositions, vaccines comprising such. Polynucleotide molecules encoding such, and methods of producing the polypeptide were also claimed.

A preliminary amendment filed 27 May 1998 as Paper No. 5, added new claims 24-25 and amended the dependencies of claims 1-3, 5-10, 12-14, 16-17, 19-21 and 23.

On 16 June 1999, the Office mailed Paper No. 8, which contained a two-way Restriction Requirement dividing the claims into groups as follows:

> Restriction to one of the following inventions is required under 35 U.S.C. § 121 and 372:

I. Claims 1-12 and 19-24, drawn to polypeptide free of botulism toxin activity, polypeptide composition and vaccine comprising said polypeptide.

II. Claims 13-18 and 25, drawn to recombinant DNA encoding a polypeptide and a method of producing a polypeptide

The groups lack the same or corresponding special technical feature for the following reasons:

The polypeptides of Group I comprise amino acids whereas the recombinant DNA of Group II comprises nucleotides. Further the polypeptides have different functions from DNA, i.e., DNA functions to encode polypeptide.

The examiner also reasoned that East et al teach a polypeptide as recited in claim 1, therefore the polypeptide does not define a contribution over the prior art.

Because these inventions are distinct for the reasons given above and have acquired separate status in the art because of their recognized divergent subject matter and because the literature searches required for examination of the groups identified above are not coextensive, restriction for examination purposes as indicated is proper.

In Paper No. 9, filed 14 September 1999, Applicants elected Group I for examination, with traverse. The traversal was on the grounds that

> "[a]pplicants consider the findings of the international search report and the holding of unity of invention to pertain in the present application as well, namely that the two groups of claims [sic, do not] lack the same or corresponding special technical feature."

In Paper No. 10, mailed 7 October 1999, the examiner considered the traversal but found it not persuasive because the technical feature linking Groups I and II was not a contribution over the prior art, in view of East et al. The Restriction Requirement was deemed proper and made Final. Claims 13-18 and 25 were withdrawn under 37 CFR 1.142(b), as being directed to a non-elected invention. Claims 1-7 and 9-10 were rejected under 35 U.S.C. 101, as being directed to non-statutory subject matter. Claims 3-6 were rejected under 35 U.S.C. 112, for scope of enablement. Claims 5, 7-12 and 19-24, and those dependent thereon were rejected under 35 U.S.C. 112, second paragraph for indefiniteness. Claims 1-2, 12 and 22 were rejected under 35 U.S.C. 102(b) as being anticipated by Sesardic et al.

In Paper No. 12, filed 7 January 2000, applicants submitted the first petition under 37 CFR 1.144, which was matched to the file but unfortunately not forwarded promptly for decision. An amendment to the claims was filed 7 January 2000 as Paper No. 13, in which claims 1-7, 9-10, 17, 19 and 21 were amended.

In Paper No. 14, the Office sent out a non-final office action, which acknowledged receipt of the petition and stated that the application would be forwarded for consideration. The traversal of the restriction requirement was considered and found not persuasive. Claims 13-18 and 25 were withdrawn under 37 CFR 1.142(b), as being

directed to a non-elected invention. Claims 1-7 and 9-10 stood rejected under 35 U.S.C. 101, as being directed to non-statutory subject matter. Claims 7 and 9 and those dependent thereon (claims 8 and 10-11) and claims 22-24 were rejected under 35 U.S.C. 112, for scope of enablement. Claims 8, 10, 11 were rejected under 35 U.S.C. 112, second paragraph for indefiniteness. Claims 1-2, 12 and 22 were rejected under 35 U.S.C. 102(a) as being anticipated by Sesardic et al. Claims 3-4, 7-10 and 19-24 were rejected under 35 U.S.C. 102(a) as being anticipated by Sesardic et al, as evidenced by the Sigma catalog 1992. Claims 1-4, 7-12, 19-24 were rejected under 35 U.S.C. 102(b) as being anticipated by Simon et al.

In Paper No. 15, filed 16 June 2000, applicants submitted another amendment which canceled claims 1 and 2, amended claims 3, 7-10, 12-14, 19-20 and added new claim 26.

In Paper No. 16, filed 16 June 2001, applicants added new claims 27-33.

Paper No. 17, mailed 27 February 2001, contained a Notice concerning the sequence requirements.

In Paper No. 18, filed 27 March 2001, Applicants filed a sequence listing.

In Paper No. 19, mailed 5 June 2001, as a final Office action, claims 3-12, 19-24, 26-28 and 30-33 were pending and under examination. Claims 13-18 and 25 remained withdrawn as being directed to a non-elected invention. Applicants were reminded that a complete reply to the final rejection must include cancellation of the non-elected claims or other appropriate action (37 CFR 1.144), citing MPEP 821.01. Claims 22-24 were rejected under 35 U.S.C. 112, first paragraph for scope of enablement. Claims 3-4, 7-10, 12, 19-24, 26-27 and 30-33 were rejected under 35 U.S.C. 102(a) as being anticipated by Sesardic et al as evidenced by Sigma catalog, 1992. Claims 3-4, 7-12, 19-24, 26-27 and 30-33 were rejected under 35 U.S.C. 102(b) as being anticipated by Simon et al. Claims 3-4, 7-10, 12, 19-24, 26-27 and 30-33 were rejected under 35 U.S.C. 102(b) as being anticipated by Thompson et al. Claims 3-12, 19-24, 26-28 and 30-33 were rejected under 35 U.S.C. 112, second paragraph for indefiniteness. The action was made Final.

In Paper No. 20, mailed 10 August 2001, the Office addressed the Petition filed 7 January 2000. The Petition had requested rejoinder of the DNA and polypeptide claims; this was denied because the polypeptide, as claimed at that time, did not make a contribution over the prior art. The Decision pointed out that the "determination may, therefore, change with each Office action depending upon the prior art discovered and applicants' actions."

On 5 September 2001, Applicants filed Paper No. 21, which proposed cancellation of claims 3, 4, 20, 22-24 and 27 and amendment of claims 5-8, 12, 19, 21, 26, 28, 30-31.

On 4 October 2001, the Office mailed out an Advisory Action, which stated that the proposed amendment would not be entered, in view of new issues raised and the amendments were not deemed to place the application in better condition for appeal by materially reducing or simplifying the issues for appeal.

On 5 October 2001, an amendment to the claims and this petition were filed as Paper Nos. 23 and 24. Unfortunately the petition was not promptly forwarded for decision. The amendment canceled claims 3-4, 20, 22-24 and 27 and amended claims 5-8, 12-14 17, 19, 21, 26, 28 and 30-31. It is noted that claim 29, incorrectly listed as pending by the Petition, was cancelled by Paper No. 18 filed 5 June 2001.

Subsequent to the filing of this petition, an interview took place on 30 October 2001, stating that the after final amendment was received and under review.

On 5 November 2001, a request for continued prosecution application was filed as Paper No. 26.

DISCUSSION

The application, file history and petition have been considered carefully. The petition presents several concerns:

(1) the failure of the Office to timely decide the Petition filed 7 January 2000, thereby resulting in a premature Final Office action;

(2) pursuant to Rule 116(c), a request to amend claims 13, 14 and 17

(3) in the event that the attached amendment was not entered, withdrawal of the finality of the Office action and

(4) a request to have the restriction between Groups I and II withdrawn.

Each concern will be addressed in turn.

Concerning item (1), Applicants argue that the finality of Paper No. 19 was premature in view of fact that an outstanding petition, filed 18 months previous, had not, at the time of Paper No. 19's mail date, been decided by the Office. The Finality of an Office action is results from claim rejections. In contrast, the petition concerned a restriction requirement and not claim rejections. The petition decision did not alter the Finality of the Office action, which was proper. Applicants are correct that the Petition Decision deemed the restriction requirement was proper, between the DNA and polypeptides as defined by the claims pending at the time the restriction requirement was made and that the restriction requirement should be reviewed with each Office action.

Concerning item (2), Applicants' request that the Office enter the amendment presented in Paper No. 21, filed 5 September 2001 is moot in view of the filing and entry of a subsequent Amendment G. The Amendment G filed 5 October 2001 as Paper No. 24, is cumulative to Amendments presented in Paper No. 21. Amendment G resolved all outstanding rejection in the final Office action as follows:

The rejection of Claims 22-24 under 35 U.S.C. 112, first paragraph for scope of enablement was resolved by cancellation of claims 22-24.

The rejections of Claims 3-4, 7-10, 12, 19-24, 26-27 and 30-33

(i) under 35 U.S.C. 102(a) as being anticipated by Sesardic et al as evidenced by Sigma catalog, 1992 and

(ii) under 35 U.S.C. 102(b) as being anticipated by Thompson et al

were resolved by

(1) cancellation of claims 3-4, 20, 22-24 and 27

(2) amendment of claims 7, 9-10, 12, 19, 21 to depend upon non-rejected claim 5

(3) amendment of independent claim 8 to narrow to SEQ ID Nos. 1, 2, 3 or 4, as in non-rejected claim 5.

The rejection of Claims 3-4, 7-12, 19-24, 26-27 and 30-33 under 35 U.S.C. 102(b) as being anticipated by Simon et al was resolved by

(1) cancellation of claims 3-4, 20, 22-24 and 27

(2) amendment of claims 7, 9-10, 12, 19, 21 to depend upon non-rejected claim 5

(3) amendment of independent claim 8 to narrow to SEQ ID Nos. 1, 2, 3 or 4, as in non-rejected claims

(4) amendment of claim 11 to depend upon non-rejected claim 8.

The rejection of Claims 3-12, 19-24, 26-28 and 30-33 under 35 U.S.C. 112, second paragraph for indefiniteness was resolved by

(1) the cancellation of claims 3-4, 20 and 27

(2) removing the offending terms "derivative" and "fragment" from remaining claims.

The amendment in Paper No. 24 also corrected an obvious typographical error, thereby overcoming the objection of claim 8.

One minor error is noted in amended claim 14, where antecedent basis is lacking for the phrase "fragment or derivative."

By way of explanation, the Examiner's review of this application may have been complicated by the following two clerical errors, which will be fixed by the Office: claim 10 exists in two different forms, of which only the version presented by Paper No. 15 is correct. Claim 19 exists in two different forms, of which only the version presented by Paper No 24 is correct.

Concerning Item (4), in view of these amendments, the claims of Group I, directed to the polypeptide, now define a contribution over the prior art. According to PCT Rule 13.2 unity of invention will be fulfilled when the groups are linked by a special technical feature which makes a contribution over the prior art. Moreover, in view of Example 17 in Annex B of the Administrative Instructions, generic DNA sequences encoding specific protein molecules which are a contribution over the prior art, will be considered as sharing a special technical feature with the specific protein molecules. As such, upon review of Paper No. 24, Group I, drawn to the specific polypeptides and Group II, drawn to generic DNA encoding the specific polypeptides should have been rejoined at that time

for concurrent examination. Accordingly, the restriction requirement has been withdrawn between Groups I and II.

Concerning Item (3), Applicants' request to have the finality of the Office action withdrawn is moot in view of the filing of a request for continued prosecution application on 5 November 2001. Filing of a CPA changes the status of this application from one filed under 35 U.S.C. 371 to 35 U.S.C. 111(a). US restriction practice normally would now apply to the instant application. However, in view of the unfortunate prolonged prosecution history, and the fact that Paper No. 24 was filed prior to the CPA request, the Office will consider the polypeptide and DNA encoding such as one invention for purposes of examination of this CPA application. Upon filing of Paper No. 24, in the 371 application, the claims were amended so that the special technical features linking the DNA and polypeptide define a contribution over the prior art. At that time, the Groups I and II should have been rejoined and examined together.

If subsequent examination identifies additional prior art rendering one or more of the claims unpatentable, then this rejoinder is further justified by the fact that the Office should have rejoined the Groups I and II, upon receipt and review of Paper Nos. 23 and 24, prior to the submission of the CPA. Because the Office should have examined the DNA and polypeptide together following receipt of Paper Nos. 23 and 24, the Office cannot now establish a search burden that justifies any division between Group I and Group II in this CPA application.

DECISION

The petition is **GRANTED-IN-PART** for the reasons set forth above as follows: The restriction requirement between Groups I, polypeptide, and Group II, DNA encoding the polypeptide, has been withdrawn. Claims directed to the specific polypeptides and generic DNA encoding such will be examined together in this application.

Additionally, Applicants' request filed 5 October 2001 for one month refund of $100, for the extension of time, is granted.

The application will be forwarded to the examiner for prompt action consistent with this decision.

Should there be any questions with regard to this letter, please contact Special Program Examiner Julie Burke by letter addressed to the Director, Technology Center 1600, Washington DC 20231 or by telephone at (703) 308-7553 or by facsimile transmission at (703) 308-7230.

Bruce Kisliuk
TC1600 Group Director

UNITED STATES DEPARTMENT OF COMMERCE
Patent and Trademark Office

Patent Cooperation Treaty
Legal Office

Address: Assistant Commissioner for Patents
Box PCT
Washington, D.C. 20231

#14

MAY 19 2000

BIRCH STEWART KOLASCH & BIRCH LLP
PO BOX 747
FALLS CHURCH, VA 22040-0747

In re Application of GAISER et al Application No.: 08/981,233 PCT No.: PCT/EP96/02633 Int. Filing Date: 18 June 1996 Priority Date: 19 June 1995 Attorney's Docket No.: 2972-103P For: PROCESS AND DEVICE FOR CONTINUOUSLY DRYING PROTEIN-CONTAINING SLUDGE	DECISION ON RENEWED PETITION UNDER 37 CFR 1.48(a)

This decision is responsive to applicants' "Letter Responding to Notification of a Defective Response" and is considered a response to the Decision on "Petition Correcting Inventorship under 37 CFR 1.48(a)" mailed on 27 December 1999. No additional petition fee is required.

The decision mailed on 27 December 1999 indicated that applicants had met all the requirements of 37 CFR 1.48(a) with the exception of an acceptable written consent of the assignee, ANDRITZ-PATENTVERWALTUNGSGESELLSCHAFT m.b.H.

Applicants' letter is accompanied by a new written consent where the name and the title of each person with authority to sign on behalf of the assignee ANDRITZ-PATENTVERWALTUNGSGESELLSCHAFT m.b.H. is clearly identifiable.

Therefore, applicants have met all of the requirements under 37 CFR 1.48(a) for correction of inventorship.

The petition under 37 CFR 1.48(a) is **GRANTED**. The 35 U.S.C. 371(c) and 102(e) date for this application is 02 April 1998. The application file will be forwarded to US/DO/EO for further processing.

Richard R. Cole
Legal Examiner
PCT Legal Office
CMK/RRC:cmk

Cynthia M. Kratz
Petitions Attorney
PCT Legal Office
Telephone(703) 306-5467

#32

UNITED STATES
PATENT AND
TRADEMARK OFFICE

UNDER SECRETARY OF COMMERCE FOR INTELLECTUAL PROPERTY
AND DIRECTOR OF THE UNITED STATES PATENT AND TRADEMARK OFFICE
WASHINGTON, D.C. 20231
WWW.USPTO.GOV

APR - 9 2002

BIRCH, STEWART, KOLASCH & BIRCH
P. O. BOX 747
FALLS CHURCH, VA 22040-0747

In re Application of	:
Ulf Landegren	:
Serial No.: 08/981,310	: PETITION DECISION
Filed: December 16, 1997	:
Attorney Docket No.: 1209-0121P	:

This is a decision on the petition under 37 CFR 1.181, filed November 5, 2002, to require the examiner to enter an amendment. The delay in acting on this petition is regretted.

BACKGROUND

A review of the file history shows that this application was filed with 8 claims with claim 3 reciting that "the affinity reagents are lectins, receptors, single claim antibodies, cofactors and nucleic acids". This specific language did not appear *in haec verba* in the specification although the description of Figure 1 in the specification contains a similar, but not identical, list of such reagents. Following the filing of a CPA request the examiner in an Office action mailed May 21, 2001, for the first time rejected claims 1, 3 and 4 under 35 U.S.C. 112, first paragraph, as lacking support in the specification, as originally filed, for the phrase noted above.

In response applicant argued that the reagents of claim 3 were described in Figure 1 in general terms. In response the examiner mailed a Final Office action to applicant on January 16, 2002, maintaining the rejection of claims 1, 3 and 4 under 35 U.S.C. 112, first paragraph, arguing that the referenced portion of the specification does not provide sufficient support for the limitations of claim 3.

Applicant replied to the Final Office on May 16, 2002, action by proposing an amendment to the specification which inserted a paragraph essentially identical to original claim 3, changing the "and" to "or" for clarity. The same change had previously been made to claim 3 after the first Office action. The examiner, by means of an Advisory Action mailed June 19, 2002, refused entry of the amendment on various grounds and specifically commented that the paragraph insertion would raise the aspect of "new matter" in the specification. On July 16, 2002, a Notice of Appeal was filed. This petition was filed on November 5, 2002, concurrently with the Appeal Brief.

DISCUSSION

Initially it is noted that this petition was filed almost four months after the repeated action of the

examiner which is well beyond the two month non-extendable time period set in 37 CFR 1.181(f) which may be used as grounds for dismissal of this petition. However, where the interests of applicant and the Office are significant, such requirement may be withdrawn and the petition decided on the merits.

Applicant petitions the decision of the examiner not to enter the amendment to the specification inserting the limitations of claim 3 into the specification on page 3, changing only the word "and" to "or" for clarity. Entry of the amendments to the claims was not petitioned. The examiner argues that the amendment lacks support in the original disclosure even when considering the original claims as part of the original disclosure. The examiner specifically states that "the macromolecule of (original) claim 1 was not defined to be a protein".

The examiner's statement is correct. However, looking to the specification for definition of "macromolecule", one finds at page 3, lines 14-15, that the test kit comprises a first reagent having affinity for a specific macromolecule, such as a protein. Thus original claim 1, although it does not define macromolecule itself, must be considered to encompass the description of macromolecule as set forth in the specification which includes protein. Further, the examiner has not objected to the amendment to original claim 1 which adds the limitation that the "macromolecule is a protein", thus accepting it as part of the original description of the specification. There is therefor no reasonable argument that the limitation of claim 3 does not refer to proteins and cannot be inserted into the specification since it is supported by the original disclosure.

DECISION

Applicants' petition is **GRANTED.**

The amendment to the specification inserting the proposed paragraph at page 3 will be permitted entry if presented as a separate paper. The other amendments proposed in the amendment after Final rejection were not addressed in the petition and have not been considered. Thus the requirement for presentation of the proposed amendment to the specification in a separate paper.

There is no fee for this petition and the petition fee paid of $130.00 will be credited to applicant's Deposit Account No., 02-2448, as directed.

Should there be any questions with respect to this decision, please contact William R. Dixon, Jr., by mail addressed to: Director, Technology Center 1600, Washington, D.C. 20231, or by telephone at (703)308-3824 or by facsimile transmission at (703) 305-7230.

Jasemine C. Chambers

Jasemine C. Chambers
Director, Technology Center 1600

UNITED ST[illegible] DEPARTMENT OF COMMERCE
Patent and Trademark Office

Patent Cooperation Treaty Legal Office

Address: Assistant Commissioner for Patents
Box PCT
Washington, D.C. 20231

#3

JUL 13 2000

William R. Evans
LADAS & PARRY
25 West 61st Street
New York, NY 10023

In re Application of KIRJAVAINEN et al Application No.: 08/981,219 PCT No.: PCT/FI96/00359 Int. Filing Date: 20 June 1996 Priority Date: 26 June 1995 Attorney Docket No.: U 011572-4 For: AN EXTRUSION APPARATUS AND METHOD, A TUBULAR PRODUCT, AND A PIPE	DECISION ON PETITION

This is a decision on applicants' "RESPONSE TO NOTIFICATION OF MISSING REQUIREMENTS and PETITION UNDER 37 CFR 1.181 TO CONVERT and REQUEST FOR REFUND" filed in the United States Patent and Trademark Office (USPTO) on 17 March 1999.

BACKGROUND

On 10 June 1996, applicants filed international application PCT/FI96/00359, which claimed a priority date of 26 June 1995. A copy of the earlier international application was communicated to the USPTO from the International Bureau on 16 January 1997. A Demand for international preliminary examination, in which the United States was elected, was filed on 22 January 1997, prior to the expiration of nineteen months from the priority date. Accordingly, the thirty-month period for paying the basic national fee in the United States expired at midnight on 26 December 1997.

On 18 December 1997, applicants filed a transmittal letter for entry into the national stage in the United States which was accompanied by, *inter alia*,: a check for $1,070.00; a copy of the international application; a "translation" of the international application into English (note that the term "translation" is confusing since the copy of the international application is itself in English and thus a translation into English is not required); an

authorization to charge any additional fees to counsel's Deposit Account No. 12-0425; and a preliminary amendment. This submission was identified by applicants as having attorney docket number **U 011574-0** and was assigned application number **08/981,360** (the '360 application) by the United States Patent and Trademark Office (USPTO). The "translation" does not appear to be identical to the published international application. (Although the two have not been compared line by line, it is noted that at least the titles are different.)

On 19 December 1997, applicants filed another transmittal letter for entry into the national stage in the United States which was accompanied by, *inter alia*,: a check for $1,070.00; a copy of the international application; a "translation" of the international application into English (the term "translation" is confusing since the copy of the international application is itself in English and thus a translation into English is not required); an authorization to charge any additional fees to counsel's Deposit Account No. 12-0425; and a preliminary amendment. This submission was identified by applicants as having attorney docket number **U 011572-4** and was assigned application number **08/981,219** (the '219 application) by the USPTO. The "translation" provided with this submission does not appear to be identical to either the international application or the "translation" filed 18 December 1997.

On 19 December 1997, applicants also filed another transmittal letter for entry into the national stage in the United States which was accompanied by, *inter alia*,: a copy of the international application; a "translation" of the international application into English (the term "translation" is confusing since the copy of the international application is itself in English and a translation into English is not required); an authorization to charge any additional fees to counsel's Deposit Account No. 12-0425; and a preliminary amendment. This submission was identified by applicants as having attorney docket number **U 011573-2**. It was placed by the USPTO in the '219 application. Both of the submissions filed 19 December 1997 appear to have been in the same envelope as both are identified by the same "Express Mail" mailing number-- EI528037962US. The "translation" provided with this submission does not appear to be identical to the international application or to either of the "translations" mentioned above.

On 08 October 1998, applicants filed a "REQUEST FOR NATIONAL PHASE ENTRY" including copies of the transmittal letter filed 18 December 1997, a postcard receipt, and a declaration of the inventors. This submission was not identified with an application number but did identify the attorney docket number as U 011574-0.

On 22 February 1999, the USPTO mailed a NOTIFICATION OF MISSING REQUIREMENTS UNDER 35 U.S.C. 371 (Form PCT/DO/EO/905) in the '219 application indicating, *inter alia*, that an oath or declaration in accordance with 37 CFR 1.497(a)-(b) and the surcharge under 37 CFR 1.492(e) were required.

On 08 March 1999, the USPTO mailed a NOTIFICATION OF ACCEPTANCE OF APPLICATION UNDER 35 U.S.C. 371 (Form PCT/DO/EO/903) according the '219 application 35 USC 102(e) and 371 dates of 08 October 1998.

On 17 March 1999, applicants filed the present petition requesting that the '219 application be converted from an application filed under 35 U.S.C. 371 to one filed under 35 U.S.C. 111. The petition was accompanied by an authorization to charge $130.00 for the requisite petition fee.

DISCUSSION

As noted above, in addition to the '219 application, applicants also filed on 18 December 1997, an additional set of application papers (Atty. Dockt. No. U 011574-0) for entry into the national stage for the above-captioned international application which has been accorded U.S. Serial No. 08/981,360. Both sets of application papers, however, were ultimately placed in the '219 application, along with applicants' submission of 08 October 1998.

35 U.S.C. 363 states:

> An international application designating the United States shall have the effect, from its international filing date under article 11 of the treaty, of a national application for patent regularly filed in the Patent and Trademark Office except as otherwise provided in 102(e) of this title. (emphasis added)

Further, 35 U.S.C. 371(b) states:

> (b) Subject to subsection (f) of this section, the national stage shall commence with the expiration of the applicable time limit under article 22(1) or (2), or under article 39(1)(a) of the treaty. (emphasis added)

The language of 35 U.S.C. 363 and 371 refers to the national stage of the PCT in the singular only, and thus only one (1) national stage application in the U.S. may develop from an international application. In that only one national stage of a PCT application is permitted, the filing of one of either the '219 application or the '360 application was improper. Therefore, conversion of one of these applications to one filed under 35 U.S.C. 111 is warranted. Although applicant requests conversion of the '219 application, it is more appropriate to convert the '360 application since the '219 application has already undergone a substantial amount of processing under 35 U.S.C. 371. The '360 application will be accorded a filing date of 18 December 1997, since the application papers as originally filed met the 35 U.S.C. 111 requirements for a specification, at least one claim, and the naming of the inventors.

As noted above, in all of applicants' submissions, both a copy of the international application and a "translation" of the international application were provided. The copy of the

international application will be used as the specification for the '219 application because the '219 application has been treated as the national stage application.

It should be noted that applicants are entitled in the '360 application to claim benefit under 35 U.S.C. 120 and 365(c) of the filing date of the international application for the common subject matter, since the '360 application and the international application were co-pending on 18 December 1997. In order to obtain benefit of the earlier international application, applicants must amend the beginning of the specification of this application by inserting a proper reference to the parent international application. Note that the reference to the international application made in the preliminary amendment filed 17 March 1999 is improper in that the '219 application has been treated as being filed under 35 U.S.C. 371 and thus cannot be a divisional.

As noted above, the declaration of the inventors filed 08 October 1998 having attorney docket number U 011573-2 was placed in the '219 application. Based on this placement, the USPTO incorrectly mailed a NOTIFICATION OF ACCEPTANCE OF APPLICATION UNDER 35 U.S.C. 371 (Form PCT/DO/EO/903) on 03 March 1999 indicating that the '219 application had been accorded 35 USC 102(e) and 371(c) dates of 08 October 1998. Deposit account 12-0425 was then charged $130.00 for the surcharge for filing the declaration later than 30 months from the priority date and $440.00 for claims in excess of twenty (as of 03 March 1999, there were a total of forty claims and the fee for each claim in excess of 20 was $22.00).

In accordance with this decision, the declaration filed 08 October 1998 was removed from the '219 application and placed in the '360 application. Consequently, a declaration under 37 CFR 1.497(a)-(b) is required in the '219 application.

Note that a new declaration is required for the '360 application as well since it is not clear which specification the applicants executed. The declaration is directed to the specification which "was described and claimed in PCT International Application No. PCT/FI96/00359 filed on 20 June 1996". Since applicants filed both a copy of the international application and a "translation" which is not identical to the copy of the international application, it is unclear which specification the declaration is directed to.

The papers filed 19 December 1997 and identified by docket number U 011573-2 will remain in the '219 application and will be treated after applicants provide clarification. It is noted, however, that only one (1) national stage application in the U.S. may develop from an international application. It is possible that applicants intend this submission as yet another submission under 35 U.S.C. 111(a). If that is the case, a petition under 37 CFR 1.182 to remove the specification and to treat the specification as a filing under 35 USC 111(a) accompanied by the basic filing fee will be required. Clarification is also required concerning which of the two specifications submitted identified by docket number U 011573-2 (the copy of the international

application and the "translation") is intended as the specification to be used.

Fees

Application number 08/981,219

The following fees have already been paid:
-$1,070.00 by for the basic national fee;
-$130.00 charged to deposit account 12-0425 for the surcharge for filing the declaration later than 30 months from the priority date;
-$440.00 charged to deposit account 12-0425 for claims in excess of twenty.
An additional $130.00 has been charged to deposit account 12-0425 for the petition filed 17 March 1999.

Application Number 08/981,360

Applicants have paid $1070.00 by check for the basic national fee. Because this application is being converted to an application under 35 U.S.C. 111(a), the basic national fee is no longer due. However, the following fees are due: $690.00 for the basic filing fee; and $360.00 for claims in excess of twenty. The balance of $20.00 has been refunded to deposit account 12-0425.

CONCLUSION

For the reasons above, the petition is **GRANTED**.

The NOTIFICATION OF ACCEPTANCE OF APPLICATION UNDER 35 U.S.C. 371 mailed 08 March 1999 in application number 08/981,219 is hereby VACATED.

Application number 08/981,219 will be the national stage of PCT/FI96/00359. However, the requirements under 35 U.S.C. 371(c) have not yet been satisfied. Applicants are required to (1) file an oath or declaration in compliance with 37 CFR 1.497(a)-(b) and (2) clarify what is intended with the submission filed 19 December 1997 having docket number U 011573-2 within a time limit of ONE (1) MONTH from the date of mailing of this decision. Extensions of time may be obtained under 37 CFR 1.136(a). Failure to timely file a proper reply will result in abandonment of the application.

The papers filed on 18 December 1997 and 08 October 1998 have been removed from the present application file and placed in US application number 08/981,360. Applicants are required to (1) file a new oath or declaration in compliance with 37 CFR 1.63 and (2) identify which of the two specifications filed on 18 December 1997 is to be used as the specification for application number 08/981,360 within a time limit of ONE (1) MONTH from the date of mailing of this

decision. Extensions of time may be obtained under 37 CFR 1.136(a). Failure to timely file a proper reply will result in abandonment of the application.

A copy of this decision has been placed in application 08/981,360.

Daniel Stemmer
Legal Examiner
PCT Legal Office
Telephone: (703) 308-2066
Facsimile: (703) 308-6459

Leonard Smith
Legal Examiner
PCT Legal Office

UNITED STATES PATENT AND TRADEMARK OFFICE

Commissioner for Patents
United States Patent and Trademark Office
P.O. Box 1450
Alexandria, VA 22313-1450
www.uspto.gov

LADAS & PARRY
26 WEST 61ST STREET
NEW YORK NY 10023

COPY MAILED

OCT 04 2007

OFFICE OF PETITIONS

In re Application of :
Kari Kirjavainen et al :
Application No. 08/981,360 : DECISION ON PETITION
Filed: December 18, 1997 :
Attorney Docket No. U 011574-0 :

This is a decision on the petition under 37 CFR 1.137(b), filed February 15, 2007, to revive the above-identified application.

The petition is **DISMISSED.**

Any request for reconsideration of this decision must be submitted within TWO (2) MONTHS from the mail date of this decision. Extensions of time under 37 CFR 1.136(a) are permitted. The reconsideration request should include a cover letter entitled "Renewed Petition under 37 CFR 1.137(b)." This is **not** a final agency action within the meaning of 5 U.S.C. § 704.

The application became abandoned for failure to reply in a timely manner to the non-final Office action mailed April 12, 2006, which set a shortened statutory period for reply of three (3) months. No extensions of time were obtained under the provisions of 37 CFR 1.136(a). Accordingly, the application became abandoned on July 13, 2006. A Notice of Abandonment was mailed on November 15, 2006.

A grantable petition under 37 CFR 1.137(b) must be accompanied by: (1) the required reply, unless previously filed; (2) the petition fee as set forth in 37 CFR 1.17(m); (3) a statement that the entire delay in filing the required reply from the due date for the reply until the filing of a grantable petition pursuant to 37 CFR 1.137(b) was unintentional; and (4) any terminal disclaimer (and fee as set forth in 37 CFR 1.20(d)) required by 37 CFR 1.137(d). Where there is a question as to whether either the abandonment or the delay in filing a petition under 37 CFR 1.137 was unintentional, the Director may require additional information. *See* MPEP 711.03(c)(II)(C) and (D).

The petition currently fails to satisfy item (3) above.

A review of the Notice of Abandonment in this application contains the following statement by the examiner: "Applicant was contacted and has abandoned the case." The statement as worded implies that this application was intentionally abandoned. Therefore, the question of intentional delay is fairly raised by the ambiguous statement such that clarification is in the best interest of all parties. Accordingly, before revival of this application can be effected, petitioner must, in a renewed petition under 37 CFR 1.137(b), clarify for the record as to whether in fact this application was intentionally abandoned. Copies of any communications between petitioner and his client may be submitted as evidence to support a finding that there was no intent to abandon this application.

Further correspondence with respect to this matter should be addressed as follows:

By Mail: Mail Stop PETITION
Commissioner for Patents
P. O. Box 1450
Alexandria, VA 22313-1450

By hand: U. S. Patent and Trademark Office
Customer Service Window, Mail Stop Petitions
Randolph Building
401 Dulany Street
Alexandria, VA 22314

The centralized facsimile number is **(571) 273-8300.**

Correspondence regarding this decision may also be filed through the electronic filing system of the USPTO.

To expedite consideration, petitioner may wish to contact the undersigned regarding the filing of the renewed petition under 37 CFR 1.137(b).
Telephone inquiries concerning this decision should be directed to the undersigned at (571) 272-3218.

Frances Hicks
Petitions Examiner
Office of Petitions

UNITED STATES PATENT AND TRADEMARK OFFICE

Commissioner for Patents
United States Patent and Trademark Office
P.O. Box 1450
Alexandria, VA 22313-1450
www.uspto.gov

LADAS & PARRY
26 WEST 61ST STREET
NEW YORK NY 10023

COPY MAILED

NOV 29 2007

OFFICE OF PETITIONS

In re Application of :
Kari Kirjavainen et al :
Application No. 08/981,360 : DECISION ON PETITION
Filed: December 18, 1997 :
Attorney Docket No. U 011574-0 :

This is a decision on the renewed petition under 37 CFR 1.137(b), filed October 12, 2007, to revive the above-identified application.

The petition is **GRANTED.**

The application became abandoned for failure to reply in a timely manner to the non-final Office action mailed April 12, 2006, which set a shortened statutory period for reply of three (3) months. No extensions of time were obtained under the provisions of 37 CFR 1.136(a). Accordingly, the application became abandoned on July 13, 2006. A Notice of Abandonment was mailed on November 15, 2006.

The petition satisfies the requirements of 37 CFR 1.137(b) in that petitioner has supplied (1) the reply in the form of an amendment, (2) the petition fee of $1,500, and (3) an adequate explanation that "the entire delay in filing the required reply from the due date for the required reply until the filing of a grantable petition under 37 CFR 1.137(b) was unintentional." Accordingly, the reply to the Office action of April 12, 2006 is accepted as having been unintentionally delayed.

Telephone inquiries concerning this decision should be directed to the undersigned at (571) 272-3218.

This application is being referred to Technology Center AU 1772 for appropriate action in the normal course of business on the reply received February 15, 2007.

Frances Hicks
Petitions Examiner
Office of Petitions

UNITED STATES PATENT AND TRADEMARK OFFICE

Commissioner for Patents
United States Patent and Trademark Office
P.O. Box 1450
Alexandria, VA 22313-1450
www.uspto.gov

Date : September 12, 2008

Patent No. :7,381,454
Inventor(s) :Kari Kirjavainen, et al.
Issued :June 3, 2008
Title :A TUBULAR PRODUCT

Re: Request for Certificate of Correction

Consideration has been given your request for the issuance of a certificate of correction for the above-identified patent under the provisions of 37 CFR 1.322 and/or 1.323.

Assignees' names and addresses (assignment data) printed in a patent are based *solely* on information supplied in the appropriate space for identifying the assignment data, i.e., item 3 of the Fee(s) Transmittal Form PTOL-85B. After payment of the issue fee, correction of assignment data submitted on the PTOL-85B can only be done by Certificate of Correction under 37 CFR 1.323, with a request under 37 CFR 3.81(b).

A request for a patent to be corrected to state the name of the assignee must:

A. state that the assignment was submitted for recordation as set forth in 37 CFR 3.11 before issuance of the patent;

B. include a request for a certificate of correction under 37 CFR 1.323 along with the fee set forth in 37 CFR 1.20(a); and

C. include the processing fee set forth in 37 CFR 1.17(i).

If the request is granted, Certificates of Correction Branch will be notified that a Certificate of Correction may be issued.

See Manual of Patent Examining Procedure, Section 1481.01 (Rev. 3) (Oct. 2005).

Applicant has not included items A and or C above, accordingly, the request for Certificate of Correction to add or change the assignee data is dismissed.

Any request under 37 CFR 3.81(b) should be directed to the following address or facsimile number:

By mail: Mail Stop PETITIONS
Commissioner for Patents
Post Office Box 1450
Alexandria, VA 22313-1450

By hand: Customer Service Window
Randolph Building
401 Dulany Street
Alexandria, VA 22314

By fax: 571-273-8300
ATTN: Office of Petitions

Any inquiry concerning this communication should be directed to Ms. A. Green at (703) 308-9380 ext. 123.

Mary Diggs, Supervisor
Decisions & Certificates
of Correction Branch
(703) 308-9390 or (703) 308-9390 ext 123

Janet I. Cord
c/o Ladas & Parry LLP
26 West 61st Street
New York, NY 10023

/arg

PTO/SB/66 (03-09)
Approved for use through 03/31/2012. OMB 0651-0016
U.S. Patent and Trademark Office: U.S. DEPARTMENT OF COMMERCE
Under the Paperwork Reduction Act of 1995, no persons are required to respond to a collection of information unless it displays valid OMB control number.

PETITION TO ACCEPT UNINTENTIONALLY DELAYED PAYMENT OF MAINTENANCE FEE IN AN EXPIRED PATENT (37 CFR 1.378(c))

Patent Number	Issue Date (YYYY-MM-DD)	Application Number	Filing Date (YYYY-MM-DD)	Docket Number (if applicable)
6284125	2001-09-04	08981385	1998-04-17	MEMTEC.060AP

CAUTION: Maintenance fee (and surcharge, if any) payment must correctly identify: (1) the patent number and (2) the application number of the actual U.S. application leading to issuance of that patent to ensure the fee(s) is/are associated with the correct patent. 37 CFR 1.366(c) and (d).

SMALL ENTITY

☐ Patentee claims, or has previously claimed, small entity status. See 37 CFR 1.27.

LOSS OF ENTITLEMENT TO SMALL ENTITY STATUS

☐ Patentee is no longer entitled to small entity status. See 37 CFR 1.27(g)

NOT Small Entity			Small Entity		
	Fee	Code		Fee	Code
○	3 ½ year	(1551)	○	3 ½ year	(2551)
◉	7 ½ year	(1552)	○	7 ½ year	(2552)
○	11 ½ year	(1553)	○	11 ½ year	(2553)

SURCHARGE

The surcharge required by 37 CFR 1.20(i)(2) (Fee Code 1558) must be paid as a condition of accepting unintentionally delayed payment of the maintenance fee.

MAINTENANCE FEE (37 CFR 1.20(e)-(g))

The appropriate maintenance fee must be submitted with this petition.

STATEMENT

THE UNDERSIGNED CERTIFIES THAT THE DELAY IN PAYMENT OF THE MAINTENANCE FEE TO THIS PATENT WAS UNINTENTIONAL

PETITIONER(S) REQUEST THAT THE DELAYED PAYMENT OF THE MAINTENANCE FEE BE ACCEPTED AND THE PATENT REINSTATED

THIS PORTION MUST BE COMPLETED BY THE SIGNATORY OR SIGNATORIES

37 CFR 1.378(d) states: "Any petition under this section must be signed by an attorney or agent registered to practice before the Patent and Trademark Office, or by the patentee, the assignee, or other party in interest."

I certify, in accordance with 37 CFR 1.4(d)(4) that I am

◉ An attorney or agent registered to practice before the Patent and Trademark Office

○ A sole patentee

○ A joint patentee; I certify that I am authorized to sign this submission on behalf of all the other patentees.

○ A joint patentee; all of whom are signing this e-petition

○ The assignee of record of the entire interest

Patent Practitioner			
A signature of the applicant or representative is required in accordance with 37 CFR 1.33 and 10.18. Please see 37 CFR 1.4(d) for the form of the signature			
Signature	/Kendal M. Sheets/	Date (YYYY-MM-DD)	2009-10-22
Name	Kendal M. Sheets	Registration Number	47077

This collection of information is required by 37 CFR 1.378(c). The information is required to obtain or retain a benefit by the public which is to file (and by the USPTO to process) an application. Confidentiality is governed by 35 U.S.C. 122 and 37 CFR 1.11 and 1.14. This collection is estimated to take 1 hour to complete, including gathering, preparing, and submitting the completed application form to the USPTO. Time will vary depending upon the individual case. Any comments on the amount of time you require to complete this form and/ or suggestions for reducing this burden, should be sent to the Chief Information Officer, U.S. Patent and Trademark Office, U.S. Department of Commerce, P.O. Box 1450, Alexandria, VA 22313-1450. DO NOT SEND FEES OR COMPLETED FORMS TO THIS ADDRESS. **This form can only be used when in conjunction with EFS-Web. If this form is mailed to the USPTO, it may cause delays in reinstating the patent.**

Privacy Act Statement

The Privacy Act of 1974 (P.L. 93-579) requires that you be given certain information in connection with your submission of the attached form related to a patent application or patent. Accordingly, pursuant to the requirements of the Act, please be advised that: (1) the general authority for the collection of this information is 35 U.S.C. 2(b)(2); (2) furnishing of the information solicited is voluntary; and (3) the principal purpose for which the information is used by the U.S. Patent and Trademark Office is to process and/or examine your submission related to a patent application or patent. If you do not furnish the requested information, the U.S. Patent and Trademark Office may not be able to process and/or examine your submission, which may result in termination of proceedings or abandonment of the application or expiration of the patent.

The information provided by you in this form will be subject to the following routine uses:

1. The information on this form will be treated confidentially to the extent allowed under the Freedom of Information Act (5 U.S.C. 552) and the Privacy Act (5 U.S.C. 552a). Records from this system of records may be disclosed to the Department of Justice to determine whether the Freedom of Information Act requires disclosure of these records.

2. A record from this system of records may be disclosed, as a routine use, in the course of presenting evidence to a court, magistrate, or administrative tribunal, including disclosures to opposing counsel in the course of settlement negotiations.

3. A record in this system of records may be disclosed, as a routine use, to a Member of Congress submitting a request involving an individual, to whom the record pertains, when the individual has requested assistance from the Member with respect to the subject matter of the record.

4. A record in this system of records may be disclosed, as a routine use, to a contractor of the Agency having need for the information in order to perform a contract. Recipients of information shall be required to comply with the requirements of the Privacy Act of 1974, as amended, pursuant to 5 U.S.C. 552a(m).

5. A record related to an International Application filed under the Patent Cooperation Treaty in this system of records may be disclosed, as a routine use, to the International Bureau of the World Intellectual Property Organization, pursuant to the Patent Cooperation Treaty.

6. A record in this system of records may be disclosed, as a routine use, to another federal agency for purposes of National Security review (35 U.S.C. 181) and for review pursuant to the Atomic Energy Act (42 U.S.C. 218(c)).

7. A record from this system of records may be disclosed, as a routine use, to the Administrator, General Services, or his/her designee, during an inspection of records conducted by GSA as part of that agency's responsibility to recommend improvements in records management practices and programs, under authority of 44 U.S.C. 2904 and 2906. Such disclosure shall be made in accordance with the GSA regulations governing inspection of records for this purpose, and any other relevant (i.e., GSA or Commerce) directive. Such disclosure shall not be used to make determinations about individuals.

8. A record from this system of records may be disclosed, as a routine use, to the public after either publication of the application pursuant to 35 U.S.C. 122(b) or issuance of a patent pursuant to 35 U.S.C. 151. Further, a record may be disclosed, subject to the limitations of 37 CFR 1.14, as a routine use, to the public if the record was filed in an application which became abandoned or in which the proceedings were terminated and which application is referenced by either a published application, an application open to public inspections or an issued patent.

9. A record from this system of records may be disclosed, as a routine use, to a Federal, State, or local law enforcement agency, if the USPTO becomes aware of a violation or potential violation of law or regulation.

UNITED STATES PATENT AND TRADEMARK OFFICE

Commissioner for Patents
United States Patent and Trademark Office
P.O. Box 1450
Alexandria, VA 22313-1450
www.uspto.gov

In re Patent No. 6284125
Issue Date: September 4,2001
Application No. 08981385
Filed: April 17,1998
Attorney Docket No. MEMTEC.060AP

:
:DECISION GRANTING PETITION
:UNDER 37 CFR 1.378(c)
:

This is a decision on the electronic petition, filed October 22,2009 ,under 37 CFR 1.378(c) to accept the unintentionally delayed payment of the 7.5 year maintenance fee for the above-identified patent.

The petition is **GRANTED**.

The maintenance fee is accepted, and the above-identified patent reinstated as of October 22,2009 .
This decision also constitutes notice that the fee has been accepted. An electronic copy of the petition and this decision has been created as an entry in the Image File Wrapper. Nevertheless, petitioner should print and retain an independent copy.

Telephone inquiries related to this electronic decision should be directed to the Electronic Business Center at 1-866-217-9197.

PTO/SB/66 (03-09)
Approved for use through 03/31/2012. OMB 0651-0016
U.S. Patent and Trademark Office: U.S. DEPARTMENT OF COMMERCE
Under the Paperwork Reduction Act of 1995, no persons are required to respond to a collection of information unless it displays valid OMB control number.

PETITION TO ACCEPT UNINTENTIONALLY DELAYED PAYMENT OF MAINTENANCE FEE IN AN EXPIRED PATENT (37 CFR 1.378(c))

Patent Number	Issue Date (YYYY-MM-DD)	Application Number	Filing Date (YYYY-MM-DD)	Docket Number (if applicable)
6225284	2001-05-01	08981426	1997-12-29	4-100-8228/A

CAUTION: Maintenance fee (and surcharge, if any) payment must correctly identify: (1) the patent number and (2) the application number of the actual U.S. application leading to issuance of that patent to ensure the fee(s) is/are associated with the correct patent. 37 CFR 1.366(c) and (d).

SMALL ENTITY
☐ Patentee claims, or has previously claimed, small entity status. See 37 CFR 1.27.

LOSS OF ENTITLEMENT TO SMALL ENTITY STATUS
☐ Patentee is no longer entitled to small entity status. See 37 CFR 1.27(g)

NOT Small Entity		Small Entity	
Fee	Code	Fee	Code
○ 3 ½ year	(1551)	○ 3 ½ year	(2551)
◉ 7 ½ year	(1552)	○ 7 ½ year	(2552)
○ 11 ½ year	(1553)	○ 11 ½ year	(2553)

SURCHARGE
The surcharge required by 37 CFR 1.20(i)(2) (Fee Code 1558) must be paid as a condition of accepting unintentionally delayed payment of the maintenance fee.

MAINTENANCE FEE (37 CFR 1.20(e)-(g))
The appropriate maintenance fee must be submitted with this petition.

STATEMENT
THE UNDERSIGNED CERTIFIES THAT THE DELAY IN PAYMENT OF THE MAINTENANCE FEE TO THIS PATENT WAS UNINTENTIONAL

PETITIONER(S) REQUEST THAT THE DELAYED PAYMENT OF THE MAINTENANCE FEE BE ACCEPTED AND THE PATENT REINSTATED

THIS PORTION MUST BE COMPLETED BY THE SIGNATORY OR SIGNATORIES

37 CFR 1.378(d) states: "Any petition under this section must be signed by an attorney or agent registered to practice before the Patent and Trademark Office, or by the patentee, the assignee, or other party in interest."

I certify, in accordance with 37 CFR 1.4(d)(4) that I am

◉ An attorney or agent registered to practice before the Patent and Trademark Office

○ A sole patentee

○ A joint patentee; I certify that I am authorized to sign this submission on behalf of all the other patentees.

○ A joint patentee; all of whom are signing this e-petition

○ The assignee of record of the entire interest

Patent Practitioner			
A signature of the applicant or representative is required in accordance with 37 CFR 1.33 and 10.18. Please see 37 CFR 1.4(d) for the form of the signature			
Signature	/Kendal M. Sheets/	Date (YYYY-MM-DD)	2009-10-26
Name	Kendal M. Sheets	Registration Number	47077

This collection of information is required by 37 CFR 1.378(c). The information is required to obtain or retain a benefit by the public which is to file (and by the USPTO to process) an application. Confidentiality is governed by 35 U.S.C. 122 and 37 CFR 1.11 and 1.14. This collection is estimated to take 1 hour to complete, including gathering, preparing, and submitting the completed application form to the USPTO. Time will vary depending upon the individual case. Any comments on the amount of time you require to complete this form and/ or suggestions for reducing this burden, should be sent to the Chief Information Officer, U.S. Patent and Trademark Office, U.S. Department of Commerce, P.O. Box 1450, Alexandria, VA 22313-1450. DO NOT SEND FEES OR COMPLETED FORMS TO THIS ADDRESS. **This form can only be used when in conjunction with EFS-Web. If this form is mailed to the USPTO, it may cause delays in reinstating the patent.**

Privacy Act Statement

The Privacy Act of 1974 (P.L. 93-579) requires that you be given certain information in connection with your submission of the attached form related to a patent application or patent. Accordingly, pursuant to the requirements of the Act, please be advised that: (1) the general authority for the collection of this information is 35 U.S.C. 2(b)(2); (2) furnishing of the information solicited is voluntary; and (3) the principal purpose for which the information is used by the U.S. Patent and Trademark Office is to process and/or examine your submission related to a patent application or patent. If you do not furnish the requested information, the U.S. Patent and Trademark Office may not be able to process and/or examine your submission, which may result in termination of proceedings or abandonment of the application or expiration of the patent.

The information provided by you in this form will be subject to the following routine uses:

1. The information on this form will be treated confidentially to the extent allowed under the Freedom of Information Act (5 U.S.C. 552) and the Privacy Act (5 U.S.C. 552a). Records from this system of records may be disclosed to the Department of Justice to determine whether the Freedom of Information Act requires disclosure of these records.

2. A record from this system of records may be disclosed, as a routine use, in the course of presenting evidence to a court, magistrate, or administrative tribunal, including disclosures to opposing counsel in the course of settlement negotiations.

3. A record in this system of records may be disclosed, as a routine use, to a Member of Congress submitting a request involving an individual, to whom the record pertains, when the individual has requested assistance from the Member with respect to the subject matter of the record.

4. A record in this system of records may be disclosed, as a routine use, to a contractor of the Agency having need for the information in order to perform a contract. Recipients of information shall be required to comply with the requirements of the Privacy Act of 1974, as amended, pursuant to 5 U.S.C. 552a(m).

5. A record related to an International Application filed under the Patent Cooperation Treaty in this system of records may be disclosed, as a routine use, to the International Bureau of the World Intellectual Property Organization, pursuant to the Patent Cooperation Treaty.

6. A record in this system of records may be disclosed, as a routine use, to another federal agency for purposes of National Security review (35 U.S.C. 181) and for review pursuant to the Atomic Energy Act (42 U.S.C. 218(c)).

7. A record from this system of records may be disclosed, as a routine use, to the Administrator, General Services, or his/her designee, during an inspection of records conducted by GSA as part of that agency's responsibility to recommend improvements in records management practices and programs, under authority of 44 U.S.C. 2904 and 2906. Such disclosure shall be made in accordance with the GSA regulations governing inspection of records for this purpose, and any other relevant (i.e., GSA or Commerce) directive. Such disclosure shall not be used to make determinations about individuals.

8. A record from this system of records may be disclosed, as a routine use, to the public after either publication of the application pursuant to 35 U.S.C. 122(b) or issuance of a patent pursuant to 35 U.S.C. 151. Further, a record may be disclosed, subject to the limitations of 37 CFR 1.14, as a routine use, to the public if the record was filed in an application which became abandoned or in which the proceedings were terminated and which application is referenced by either a published application, an application open to public inspections or an issued patent.

9. A record from this system of records may be disclosed, as a routine use, to a Federal, State, or local law enforcement agency, if the USPTO becomes aware of a violation or potential violation of law or regulation.

UNITED STATES PATENT AND TRADEMARK OFFICE

Commissioner for Patents
United States Patent and Trademark Office
P.O. Box 1450
Alexandria, VA 22313-1450
www.uspto.gov

In re Patent No. 6225284
Issue Date: May 1,2001
Application No. 08981426
Filed: December 29,1997
Attorney Docket No. 4-100-8228/A

:

:DECISION GRANTING PETITION
:UNDER 37 CFR 1.378(c)

:

This is a decision on the electronic petition, filed October 26,2009 ,under 37 CFR 1.378(c) to accept the unintentionally delayed payment of the 7.5 year maintenance fee for the above-identified patent.

The petition is **GRANTED**.

The maintenance fee is accepted, and the above-identified patent reinstated as of October 26,2009 .
This decision also constitutes notice that the fee has been accepted. An electronic copy of the petition and this decision has been created as an entry in the Image File Wrapper. Nevertheless, petitioner should print and retain an independent copy.

Telephone inquiries related to this electronic decision should be directed to the Electronic Business Center at 1-866-217-9197.

UNITED STATES PATENT AND TRADEMARK OFFICE

Commissioner for Patents
United States Patent and Trademark Office
P.O. Box 1450
Alexandria, VA 22313-1450
www.uspto.gov

Patent No. : 6,562,945 B1
Ser. No. : 08/981,700
Inventor(s) : Shi-Hsiang et al.
Issued : May 13, 2003
Title : GALANIN RECEPTOR
Docket No. : 133087.03801 (A1573-1PUS)

Re: Request for Certificate of Correction

Consideration has been given your request for the issuance of a certificate of correction for the above-identified patent under the provisions of Rule(s) 1.322 and/or 1.323.

Assignees' names and addresses (assignment data) printed in a patent, are based *solely* on information supplied in the appropriate space for identifying the assignment data, i.e., item 3 of the Issue Fee Transmittal Form PTOL-85B. Granting of a request under 37 CFR 3.81(b) is required to correct applicant's error providing ***incorrect or erroneous*** assignment data, *before* issuance of a Certificate of Correction, under 37 CFR 1.323 *(see Manual of Patent Examining Procedures (M.P.E.P) Chp.1400, sect. 1481).* This procedure is required *at any time after the issue fee is paid*, including after issuance of the patent.

In view of the foregoing, your request, in this mater, is hereby denied.

A request to correct the Assignee under 37 CFR 3.81(b) should include:

A. **the processing fee set forth in 37 CFR 1.117(h) (currently $130);**
B. a statement that the failure to include the correct assignee name on the PTOL-85B was inadvertent; and
C. a copy of the Notice of Recordation of Assignment Document, reflecting the reel and frame number where the assignment(s) is recorded and/or reflecting proof of *the date* the assignment was submitted for recordation.

In the Request, Applicant(s) may request that the file be forwarded to Certificates of Correction Branch, for issuance of a Certificate of Correction, if the Request is granted.

Any request under 37 CFR 3.81(b) should be directed to the following address or facsimile number:

By mail: Mail Stop PETITIONS
Commissioner for Patents
Post Office Box 1450
Alexandria, VA 22313-1450

By hand: Customer Service Window
Mail Stop Petitions
Randolph Building
40l Dulany Street
Alexandria, VA 22314

By fax: (571) 273-0025
ATTN: Office of Petitions

If a fee (currently $100) was previously submitted for consideration of a Request for Certificate of Correction, under CFR 1.323, to correct assignment data, , no additional fee is required.

Ennis Young
For Mary Diggs
Decisions & Certificates
of Correction Branch
(703) 308-9390 ext. 117 or (703) 308-8309

UNITED STATES PATENT AND TRADEMARK OFFICE

Commissioner for Patents
United States Patent and Trademark Office
Washington, D.C. 20231
www.uspto.gov

Paper No. 28

COPY MAILED

SEP 1 4 2001

OFFICE OF PETITIONS

FOLEY & LARDNER
3000 K STREET SUITE 500
WASHINGTON, DC 20007-5109

In re Application of
Lubon et al.
Application No. 08/982,284
Filed: December 1, 1997
Attorney Docket No. 030523-0141

ON PETITION

This is a decision on the petition under 37 C.F.R. 1.182 filed August 8, 2001, which is being treated as a petition under 37 CFR 1.181 to reinstate the original power of attorney.

The petition is **granted.**

The attorneys listed on the original declaration remain the attorneys of record. Future correspondence will be mailed to solely to Foley & Lardner. The "Revocation of Power of Attorney and New Power of Attorney" filed on April 30, 2001, will not be entered because it is not signed by all the inventors of record. Neither Michael Whitham nor Mary Goulet, attorneys with the new law firm of McGuire and Woods, are recognized as attorneys of record for this application.

A petition fee is unnecessary for a petition under 37 CFR 1.181. Therefore, the petition fee of $130 will be credited to deposit account no. 19-0741.

The file is now being forwarded to Technology Center 1600.

Telephone inquiries should be directed to Petitions Attorney Steven Brantley at (703) 306-5683.

Beverly M. Flanagan
Supervisory Petitions Examiner
Office of Petitions
Office of the Deputy Commissioner
for Patent Examination Policy

cc: MCGUIRE WOODS LLP
1750 Tysons Blvd, Suite 1800
McLean, VA 22102

UNITED STATES PATENT AND TRADEMARK OFFICE

Commissioner for Patents
United States Patent and Trademark Office
P.O. Box 1450
Alexandria, VA 22313-1450
www.uspto.gov

In re Patent No. 6262252
Issue Date: July 17,2001
Application No. 08982485
Filed: December 2,1997
Attorney Docket No. MIRUS.004

:

:DECISION GRANTING PETITION
:UNDER 37 CFR 1.378(c)

:

This is a decision on the electronic petition, filed September 17,2009 ,under 37 CFR 1.378(c) to accept the unintentionally delayed payment of the 7.5 year maintenance fee for the above-identified patent.

The petition is **GRANTED**.

The maintenance fee is accepted, and the above-identified patent reinstated as of September 17,2009 . This decision also constitutes notice that the fee has been accepted. An electronic copy of the petition and this decision has been created as an entry in the Image File Wrapper. Nevertheless, petitioner should print and retain an independent copy.

Telephone inquiries related to this electronic decision should be directed to the Electronic Business Center at 1-866-217-9197.

PTO/SB/66 (03-09)
Approved for use through 03/31/2012. OMB 0651-0016
U.S. Patent and Trademark Office: U.S. DEPARTMENT OF COMMERCE
Under the Paperwork Reduction Act of 1995, no persons are required to respond to a collection of information unless it displays valid OMB control number.

PETITION TO ACCEPT UNINTENTIONALLY DELAYED PAYMENT OF MAINTENANCE FEE IN AN EXPIRED PATENT (37 CFR 1.378(c))

Patent Number	Issue Date (YYYY-MM-DD)	Application Number	Filing Date (YYYY-MM-DD)	Docket Number (if applicable)
6262252	2001-07-17	08982485	1997-12-02	LLC004

CAUTION: Maintenance fee (and surcharge, if any) payment must correctly identify: (1) the patent number and (2) the application number of the actual U.S. application leading to issuance of that patent to ensure the fee(s) is/are associated with the correct patent. 37 CFR 1.366(c) and (d).

SMALL ENTITY
☒ Patentee claims, or has previously claimed, small entity status. See 37 CFR 1.27.

LOSS OF ENTITLEMENT TO SMALL ENTITY STATUS
☐ Patentee is no longer entitled to small entity status. See 37 CFR 1.27(g)

NOT Small Entity		Small Entity	
Fee	Code	Fee	Code
○ 3 ½ year	(1551)	○ 3 ½ year	(2551)
○ 7 ½ year	(1552)	◉ 7 ½ year	(2552)
○ 11 ½ year	(1553)	○ 11 ½ year	(2553)

SURCHARGE
The surcharge required by 37 CFR 1.20(i)(2) (Fee Code 1558) must be paid as a condition of accepting unintentionally delayed payment of the maintenance fee.

MAINTENANCE FEE (37 CFR 1.20(e)-(g))
The appropriate maintenance fee must be submitted with this petition.

STATEMENT
THE UNDERSIGNED CERTIFIES THAT THE DELAY IN PAYMENT OF THE MAINTENANCE FEE TO THIS PATENT WAS UNINTENTIONAL

PETITIONER(S) REQUEST THAT THE DELAYED PAYMENT OF THE MAINTENANCE FEE BE ACCEPTED AND THE PATENT REINSTATED

THIS PORTION MUST BE COMPLETED BY THE SIGNATORY OR SIGNATORIES

37 CFR 1.378(d) states: "Any petition under this section must be signed by an attorney or agent registered to practice before the Patent and Trademark Office, or by the patentee, the assignee, or other party in interest."

I certify, in accordance with 37 CFR 1.4(d)(4) that I am

◉ An attorney or agent registered to practice before the Patent and Trademark Office

○ A sole patentee

○ A joint patentee; I certify that I am authorized to sign this submission on behalf of all the other patentees.

○ A joint patentee; all of whom are signing this e-petition

○ The assignee of record of the entire interest

Patent Practitioner			
A signature of the applicant or representative is required in accordance with 37 CFR 1.33 and 10.18. Please see 37 CFR 1.4(d) for the form of the signature			
Signature	/Mark K Johnson/	Date (YYYY-MM-DD)	2009-09-17
Name	Mark K Johnson	Registration Number	35909

This collection of information is required by 37 CFR 1.378(c). The information is required to obtain or retain a benefit by the public which is to file (and by the USPTO to process) an application. Confidentiality is governed by 35 U.S.C. 122 and 37 CFR 1.11 and 1.14. This collection is estimated to take 1 hour to complete, including gathering, preparing, and submitting the completed application form to the USPTO. Time will vary depending upon the individual case. Any comments on the amount of time you require to complete this form and/ or suggestions for reducing this burden, should be sent to the Chief Information Officer, U.S. Patent and Trademark Office, U.S. Department of Commerce, P.O. Box 1450, Alexandria, VA 22313-1450. DO NOT SEND FEES OR COMPLETED FORMS TO THIS ADDRESS. **This form can only be used when in conjunction with EFS-Web. If this form is mailed to the USPTO, it may cause delays in reinstating the patent.**

Privacy Act Statement

The Privacy Act of 1974 (P.L. 93-579) requires that you be given certain information in connection with your submission of the attached form related to a patent application or patent. Accordingly, pursuant to the requirements of the Act, please be advised that: (1) the general authority for the collection of this information is 35 U.S.C. 2(b)(2); (2) furnishing of the information solicited is voluntary; and (3) the principal purpose for which the information is used by the U.S. Patent and Trademark Office is to process and/or examine your submission related to a patent application or patent. If you do not furnish the requested information, the U.S. Patent and Trademark Office may not be able to process and/or examine your submission, which may result in termination of proceedings or abandonment of the application or expiration of the patent.

The information provided by you in this form will be subject to the following routine uses:

1. The information on this form will be treated confidentially to the extent allowed under the Freedom of Information Act (5 U.S.C. 552) and the Privacy Act (5 U.S.C. 552a). Records from this system of records may be disclosed to the Department of Justice to determine whether the Freedom of Information Act requires disclosure of these records.

2. A record from this system of records may be disclosed, as a routine use, in the course of presenting evidence to a court, magistrate, or administrative tribunal, including disclosures to opposing counsel in the course of settlement negotiations.

3. A record in this system of records may be disclosed, as a routine use, to a Member of Congress submitting a request involving an individual, to whom the record pertains, when the individual has requested assistance from the Member with respect to the subject matter of the record.

4. A record in this system of records may be disclosed, as a routine use, to a contractor of the Agency having need for the information in order to perform a contract. Recipients of information shall be required to comply with the requirements of the Privacy Act of 1974, as amended, pursuant to 5 U.S.C. 552a(m).

5. A record related to an International Application filed under the Patent Cooperation Treaty in this system of records may be disclosed, as a routine use, to the International Bureau of the World Intellectual Property Organization, pursuant to the Patent Cooperation Treaty.

6. A record in this system of records may be disclosed, as a routine use, to another federal agency for purposes of National Security review (35 U.S.C. 181) and for review pursuant to the Atomic Energy Act (42 U.S.C. 218(c)).

7. A record from this system of records may be disclosed, as a routine use, to the Administrator, General Services, or his/her designee, during an inspection of records conducted by GSA as part of that agency's responsibility to recommend improvements in records management practices and programs, under authority of 44 U.S.C. 2904 and 2906. Such disclosure shall be made in accordance with the GSA regulations governing inspection of records for this purpose, and any other relevant (i.e., GSA or Commerce) directive. Such disclosure shall not be used to make determinations about individuals.

8. A record from this system of records may be disclosed, as a routine use, to the public after either publication of the application pursuant to 35 U.S.C. 122(b) or issuance of a patent pursuant to 35 U.S.C. 151. Further, a record may be disclosed, subject to the limitations of 37 CFR 1.14, as a routine use, to the public if the record was filed in an application which became abandoned or in which the proceedings were terminated and which application is referenced by either a published application, an application open to public inspections or an issued patent.

9. A record from this system of records may be disclosed, as a routine use, to a Federal, State, or local law enforcement agency, if the USPTO becomes aware of a violation or potential violation of law or regulation.

UNITED STATES PATENT AND TRADEMARK OFFICE

Commissioner for Patents
United States Patent and Trademark Office
P.O. Box 1450
Alexandria, VA 22313-1450
www.uspto.gov

MAILED

OCT 0 1 2004

Director's Office
Group 3700

Paper No. 13

In re Application of
Richard L. Cloud : DECISION ON PETITION
Application No. 08/983,332 :
Filed: March 5, 1998 :
For: Circuit Apparatus and Configuration
For Refrigerator Systems

This is a decision on the petition originally filed on June 19, 2000, as resubmitted on August 6, 2003 and February 5, 2004. The petition is a petition to withdraw the holding of abandonment for failure to pay the issue fee. The petition is being considered pursuant to 37 CFR 1.181. No fee is required for the petition.

The petition is granted.

Petitioner alleges that this application is not abandoned because petitioner did not receive the Notice of Allowance or Notice of Allowability. Office records show that these papers were mailed on February 4, 2003, to applicant.

A review of the file history and the attachments to the submissions dated August 6, 2003 and February 5, 2004 shows the following:

1. This application as originally filed included a power of attorney in favor of David W. Carrithers. See the declaration filed with the original application papers.

2. On December 2, 1998, a petition to withdraw as attorney was filed by Mr. Carrithers. The petition was effective when approved on December 18, 1998. See paper No. 6; see also 37 CFR1.36 and MPEP § 402.06.

3. The petition to withdraw requested that the correspondence address be changed to that of Jim Higgins, registration number 29,264 at the firm of Middleton & Reutlinger. Donald G. Kelly, then Director of Group 3700, who was the official who granted the petition specifically approved that change of correspondence address, as indicated by markings appearing on the approved petition.

4. The correspondence address was not in fact changed as approved by Mr. Kelly, but was instead changed to that of applicant.

5. The Notice of Allowance mailed on April 15, 1999 was, therefore, improperly addressed to the applicant, and not to new counsel of record.

Based upon these facts, it is clear that the application is not abandoned because the Office action embodied by paper No. 9 was not mailed to the correct address of record. Accordingly, Notice of Abandonment is hereby vacated, and the holding of abandonment is withdrawn, and the application is restored to pending status.

This application is being forwarded to the Head Supervisory Applications Examiner to accomplish the following:

1. Entry of the new Power of Attorney and Correspondence Address that is attached as the last two pages of the paper dated February 5, 2004. The correspondence address should then agree precisely with the address at the bottom of this Decision.

2. Mailing a new Notice of Allowance, together with a complete copy of the Notice of Allowability and all attachments thereto.

The period for payment of the Issue Fee will run THREE MONTHS from the date upon which the new Notice of Allowance is mailed, and cannot be extended pursuant to 37 CFR 1.136. **The period for reply to certain requirements that may be set forth on the attached Notice of Allowability with respect to the submission of an oath or declaration, and with respect to certain requirements pertaining to the submission of formal drawings or drawing corrections, can no longer be extended. See 37 CFR 1.85(c), and 37 CFR 1.136(c) as amended, effective November 7, 2000, published at 65 Federal Register 54670 and 54674, respectively**.

PETITION GRANTED.

Richard A. Bertsch

Richard A. Bertsch, Director
Technology Center 3700

Wyatt Tarrant & Combs LLP
1715 Aaron Brenner Drive
Suite 800
Memphis, TN 38120

27 NOV 2002

UNITED STATES PATENT AND TRADEMARK OFFICE

COMMISSIONER FOR PATENTS
UNITED STATES PATENT AND TRADEMARK OFFICE
WASHINGTON, D.C. 20231
www.uspto.gov

MINTZ, LEVIN, COHN, FERRIS, GLOVSKY, AND POPEO
12010 Sunset Hills Road
Suite 900
Reston, Virginia 20190

In re Application of FALLS, Douglas, S., et al. U.S. Application No.: 08/983,394 PCT No.: PCT/US96/12575 International Filing Date: 31 July 1996 Priority Date: 31 July 1995 Attorney's Docket No.: 5071/00001 For: ELECTRONIC PRODUCT INFORMATION DISPLAY SYSTEM	DECISION ON PETITION TO REVIVE ABANDONED APPLICATION UNDER 37 CFR 1.137(b)

This decision is issued in response to applicants' "Petition For Revival Of An Unintentionally Abandoned Patent Application Under 37 CFR 1.137(b)" filed on 05 August 2002. Applicants paid the $640 small entity petition fee. Because the large entity fee is required, Deposit Account No. 50-0311 will be charged an additional $640 to bring applicants' payment to the required $1,280.

BACKGROUND

On 31 July 1996, applicants filed international application PCT/US96/12575 which claimed a priority date of 31 July 1995 and which designated the United States.

On 26 February 1997, a Demand was filed with the International Preliminary Examining Authority electing the United States. The election was made prior to the expiration of nineteen months from the priority date. As a result, the deadline for payment of the basic national fee was extended to expire thirty months from the priority date, i.e., 31 January 1998.

On 20 January 1998, applicants filed a transmittal letter for entry into the national stage in the United States accompanied by, among other materials, payment of the basic national fee.

On 25 August 1998, the United States Designated/Elected Office (DO/EO/US) mailed a Notification of Missing Requirements Under 35 U.S.C. 371 (Form PCT/DO/EO/905) indicating that an oath or declaration in compliance with 37 CFR 1.497 and a surcharge for providing the oath or declaration later than 30 months from the priority date were required.

On 28 September 1998, applicants filed a response to the Notification Of Missing Requirements which included payment of the required surcharge and an executed declaration.

On 05 January 1999, the DO/EO/US mailed a Notification Of A Defective Oath Or Declaration (Form PCT/DO/EO/917) indicating that the declaration filed on 28 September 1998 was defective. Specifically, the declaration was defective for failure to include the name and signature of the fourth named inventor A. Scott McPhillips.

On 14 January 2000, the DO/EO/US mailed a Notification Of Abandonment (Form PCT/DO/EO/909) indicating that the application was abandoned for failure to file a timely response to the Form PCT/DO/EO/917 mailed 05 January 1999.

On 05 August 2002, applicants filed the "Petition For Revival Of An Unintentionally Abandoned Patent Application Under 37 CFR 1.137(b)" considered herein.

DISCUSSION

37 CFR 1.137(b) permits the filing of a petition to revive an abandoned application where the abandonment resulted from an unintentional delay. A grantable petition under this section must include: (1) the required reply, unless previously filed; (2) the petition fee required by law; (3) a statement that the "entire delay in filing the required reply from the due date for the reply until the filing of a grantable petition pursuant to this paragraph was unintentional;" and (4) any terminal disclaimer and fee required pursuant to 37 CFR 1.137(c).

Regarding item (1), the "required reply," section 711.03(c) of the Manual of Patent Examining Procedures states that:

> [g]enerally, the required reply is the reply sufficient to have avoided abandonment, had such reply been timely filed.

Here, the "required reply" was a proper response to the Notification Of A Defective Oath Or Declaration, i.e., a properly executed declaration in compliance with 37 CFR 1.497. Applicants here have attached to the petition a copy of a three page declaration executed by all four inventors. However, a review of this declaration reveals that it still is not in an acceptable form. Specifically, there is an issue as to whether the declaration has been properly executed. The three page document consists of one copy of a page identified as "Page 1 of 2" and two different copies of pages identified as "Page 2 of 2." The pages identified as "Page 2 of 2" are not identical. One version of page 2 identifies three of the four inventors, and is executed by these three; the second version of page 2 identifies only the fourth inventor, A. Scott McPhillips, and is executed by him. Because the pages are all identified as being part of a two page declaration, it is not clear whether the inventors were presented with the full three page document submitted here (i.e., one document with both versions of page 2 included) or whether two separate two page declarations (neither of which identified all the inventors) have been compiled into a single document. Such compilation is impermissible (see MPEP § 201.03, page 200-7). Based on the above, applicants have not yet submitted the "required reply." Item (1) is therefore not satisfied.

Item (2) is the petition fee required under 37 CFR 1.17(m). The Petition For Revival was accompanied by a check in the amount of $640 for the small entity petition fee. Because the large entity fee is required here, Deposit Account No. 50-0311 will be charged an additional $640 to bring applicants' payment to the required $1,280. Based on this charge, item (2) is satisfied.

As for item (3), the Petition For Revival states that the "entire delay in filing the required reply from the due date until the filing of the present petition was unintentional," and the facts regarding the abandonment are discussed in the petition itself and the accompanying declaration of Ernest J. Dale. However, these statements are not provided by the persons who controlled the prosecution of this application at the time of its abandonment. The facts submitted refer to the bankruptcy of Intelledge, the company that controlled the prosecution of this application, and the purchase of the rights to the application by Information Planning And Management Service, Inc. ("IPMS") in July 1999. The petition also mistakenly implies that January 2000, the date the Notice Of Abandonment was mailed, is the date of abandonment. In fact, the application became abandoned at midnight on 05 February 1999, the date on which a response to the Notification Of A Defective Response was due. The abandonment therefore occurred at the time when Intelledge and its appointed agents (Charles A. Laff, et al.) were controlling the prosecution of the application. Further statements must be provided by persons who controlled this prosecution at the time of abandonment before a determination can be made as to whether a decision was made to intentionally abandon the application. Accordingly, item (3) has not been satisfied.

Under the terms of 37 CFR 1.137(c), the terminal disclaimer listed as item (4) above is not required for this application.

Because applicants have not satisfied all the requirements for a grantable petition under 37 CFR 1.137(b), the Petition For Revival cannot be granted on the present record.

CONCLUSION

Applicants Petition For Revival is **DISMISSED** without prejudice.

If reconsideration on the merits of this petition is desired, a proper reply must be filed within **TWO (2) MONTHS** from the mail date of this decision. Any reconsideration request should include a cover letter entitled "Renewed Petition Under 37 CFR 1.137(b)" and should include an acceptable declaration in compliance with 37 CFR 1.497 and a statement from persons who controlled the prosecution of this application at the time of abandonment as to whether the application was intentionally allowed to become abandoned. No additional petition fee is required. Extensions of time may be obtained under 37 CFR 1.136(a).

Any further correspondence with respect to this matter should be addressed to the Assistant Commissioner for Patents, Box PCT, Washington, D.C. 20231, with the contents of the letter marked to the attention of the PCT Legal Office

Richard M. Ross
PCT Petitions Attorney
PCT Legal Office
Telephone: (703) 308-6155
Facsimile: (703) 308-6459

0 5 JUN 2003

UNITED STATES PATENT AND TRADEMARK OFFICE

#12

COMMISSIONER FOR PATENTS
UNITED STATES PATENT AND TRADEMARK OFFICE
WASHINGTON, D.C. 20231
www.uspto.gov

MINTZ, LEVIN, COHN, FERRIS, GLOVSKY, AND POPEO
12010 Sunset Hills Road
Suite 900
Reston, Virginia 20190

In re Application of	:	
FALLS, Douglas, S., et al.	:	
U.S. Application No.: 08/983,394	:	DECISION ON RENEWED
PCT No.: PCT/US96/12575	:	PETITION UNDER
International Filing Date: 31 July 1996	:	37 CFR 1.137(b)
Priority Date: 31 July 1995	:	
Attorney's Docket No.: 5071/00001	:	
For: ELECTRONIC PRODUCT INFORMATION	:	
DISPLAY SYSTEM	:	

This decision is issued in response to applicants' "Renewed Petition Under 37 CFR 1.137(b)" filed on 27 January 2003. No petition fee is required.

BACKGROUND

The background for this application is set forth in detail in the decision mailed 27 November 2002. In that decision, this Office dismissed applicants' original petition for revival under 37 CFR 1.137(b) for failure to satisfy all the requirements of a grantable petition. Specifically, applicants had not filed a properly executed declaration in compliance with 37 CFR 1.497 and had not satisfied 37 CFR 1.137(b)(3) so as to confirm that the abandonment was unintentional.

On 27 January 2003, applicants filed the renewed petition considered herein.

DISCUSSION

The renewed petition includes a "Declaration Of Robert S. Beiser" in which Mr. Beiser confirms that the three page declaration filed on 05 August 2002 was in fact a single document, and not a compilation of two documents. Based on the statements in the present submission, the declaration filed on 05 August 2002 is accepted as a single document in compliance with 37 CFR 1.497.

The renewed petition also includes a "Declaration Of James B. Sharwarko," an officer of Intelledge with responsibility for patent prosecution during the period in which this application became abandoned, wherein Mr. Sharwarko confirms that the abandonment of the application was unintentional. The statements here, in combination with the statements in the original petition, satisfy the requirements of 37 CFR 1.137(b)(3).

Applicants have now satisfied all the requirements for a grantable petition to revive the application under 37 CFR 1.137(b).

CONCLUSION

Applicants' Renewed Petition For Revival is **GRANTED**.

This application is being forwarded to the National Stage Processing Branch of the Office of PCT Operations for further processing in accord with this decision. The 35 U.S.C. 371 date is 05 August 2002.

Richard M. Ross
PCT Petitions Attorney
PCT Legal Office
Telephone: (703) 308-6155
Facsimile: (703) 308-6459

1 4 MAR 2000

UNITED STATES DEPARTMENT OF COMMERCE
Patent and Trademark Office

Patent Cooperation Treaty
Legal Office

Address: Assistant Commissioner for Patents
Box PCT
Washington, D.C. 20231

9

John D. Lanza
TESTA, HURWITZ & THIBEAULT, LLP
High Street Tower
125 High Street
Boston, MA 02110

In re Application of JACOBSON U.S. Application No.: 08/983,404 PCT No.: PCT/US96/12000 Int. Filing Date: 19 July 1996 Priority Date: 20 July 1995 Attorney Docket No.: INK-001CP For: ELECTRONIC BOOK WITH MULTIPLE PAGE DISPLAYS	DECISION ON PETITION TO WITHDRAW NOTICE OF ABANDONMENT

This decision is in response to applicant's "Request for Reconsideration of Petition" purportedly originally filed 14 October 1999, and also submitted via facsimile 13 March 2000.

BACKGROUND

On 30 September 1999, a decision dismissing applicant's petition to revive an unavoidably abandoned application, or in the alternative a petition to withdraw the holding of abandonment was mailed.

On 14 October 1999, applicant purportedly submitted the instant petition which was accompanied by, *inter alia*, a copy of the law firm docket records for 24 June 1998; 24 July 1998; 24 August 1998; 24 September 1998; a copy of the above-captioned file jacket; and authorization to charge any required fees to Deposit Account No. 20-0531.

On 13 March 2000, applicant filed via facsimile a copy of the documents purportedly filed 14 October 1999, and a copy of the docket records for 24 April 1998 and 24 May 1998.

DISCUSSION

To establish the failure to receive an Office communication applicant must provide (1) a statement from the practitioner declaring that the Office communication was not received by the practitioner; (2) a statement attesting to the fact that a search of the file jacket and docket records indicates that the Office communication was not received; and (3) a copy of the docket record where the nonreceived Office communication would have been entered had it been

received and docketed must be attached to and referenced in practitioner's statement. Applicant previously satisfied item (1).

Regarding item (2), applicant states that "[a] search of the file jacket and docket records has been completed and they indicate that the Notification was never received." Ren. Pet. ¶ 2. This statement satisfies item (2).

Concerning item (3), applicant submitted copies of the law firm's docket records for 24 April, 24 May, 24 June, 24 July, 24 August, 24 September, and 24 October 1998. Applicant states that "[i]f the Notification had been received, it would have been entered into our docketing system and would have shown up in the attached records. Id. A review of the docket records corroborates applicant's claim. In addition, applicant submitted a copy of the file jacket for the above-captioned application which does not indicate that the Notification of Missing Requirements was received. Applicant attests that "[h]ad the Notification been received, it would also have been entered on the jacket for application." Id. The information submitted satisfies item (3).

Accordingly, applicants have met the requirements required to establish nonreceipt of an Office action.

CONCLUSION

Applicant's renewed petition under 37 CFR 1.181 is **GRANTED**.

The Notification of Abandonment mailed 10 December 1998 is hereby **VACATED**.

Applicant has completed the requirements for acceptance under 35 U.S.C. 371(c). The application has an international filing date of 19 July 1996, under 35 U.S.C. 363, and a 35 U.S.C. 102(e) and 371(c) date of **26 March 1999**

This application is being forwarded to the National Stage Processing Division of the Office of PCT Operations for continued

Richard Cole
PCT Legal Examiner
PCT Legal Office

James Thomson
Petitions Attorney
PCT Legal Office

Tel.: (703) 308-6457

UNITED STATES PATENT AND TRADEMARK OFFICE

Commissioner for Patents
United States Patent and Trademark Office
P.O. Box 1450
Alexandria, VA 22313-1450
www.uspto.gov

HOWARD A. SKAIST
INTEL CORPORATION
BLAKELY SOKOLOFF TAYLOR & ZAFMAN
12400 WILSHIRE BOULEVARD - 7TH FLOOR
LOS ANGELES CA 90025-1026

COPY MAILED

FEB 11 2005

OFFICE OF PETITIONS

In re Application of	:	
Dunton et al.	:	DECISION GRANTING
Application No. 08/984,005	:	PETITION
Filed: December 3, 1997	:	
Attorney Docket No. 042390.P5319	:	

This is a decision on the petition filed on January 13, 2004, pursuant to 37 CFR 1.137(b), to revive the above-identified application.

The petition is **GRANTED**.

The above-identified application became abandoned for failure to file a timely and proper reply to the final Office action mailed November 19, 2003. This Office action set a shortened statutory period for reply of three (3) months. Accordingly, the above-identified application became abandoned on February 20, 2004. A Notice of Abandonment was mailed on June 15, 2004.

With the present petition, petitioner filed a Request for Continued Examination (RCE) under 37 CFR 1.114, including an amendment and payment of the RCE fee. The RCE has been accepted as the required reply under 37 CFR 1.137(b)(1). Petitioner has met all other requirements for a grantable petition under 37 CFR 1.137(b).

The application file is being forwarded to Technology Center Art Unit 2612 for consideration of the submission under § 1.114, the amendment filed January 13, 2005.

Telephone inquiries concerning this decision should be directed to the undersigned at (571) 272-3211.

Christina Tartera Donnell

Christina Tartera Donnell
Petitions Attorney
Office of Petitions

OIPE JC16
APR 30 2001
PATENT & TRADEMARK OFFICE

PATENT

ATTORNEY DOCKET NO. CGNE.115.01US #20

IN THE UNITED STATES PATENT AND TRADEMARK OFFICE

RECEIVED
MAY 0 4 2001
TECH CENTER 1600/2900

In re application of: **Pear, *et al***

Serial No.: **08/984,099**

Filed: **December 3, 1997**

For: **COTTON FIBER TRANSCRIPTIONAL FACTORS**

Examiner: Amy Nelson

Art Unit: 1638

REQUEST FOR PERMISSION TO WITHDRAW UNDER 37 C.F.R. § 1.36

RECEIVED
MAY 0 2 2001
OFFICE OF PETITIONS

Assistant Commissioner for Patents
Washington, D.C. 20231

The undersigned attorney, on behalf of herself and all the other practitioners of the firm, requests permission to withdraw from representation as to the above-identified patent application.

Reason: At the request of the Assignee, Calgene, LLC, the file is to be forwarded to Alissa Eagle of Calgene, LLC (*see* attached copy of letter directed to Rae-Venter Law Group).

Please address all further correspondence directly to:

Alissa Eagle
Calgene, LLC
1920 Fifth Street
Davis, CA 95616

APPROVED
SPE, TC 1600
5/22/01

CERTIFICATE OF FIRST CLASS MAILING

I hereby certify that this correspondence is being deposited with the United States Postal Service with sufficient postage as first class mail in an envelope addressed to the Assistant Commissioner for Patents, Washington, D.C. 20231 on 4/25/01.

Signature: Severin Marthe

Printed Name: SEVERIN MARTHE

UNITED STATES PATENT AND TRADEMARK OFFICE

Commissioner for Patents
United States Patent and Trademark Office
Washington, D.C. 20231
www.uspto.gov

Paper No. 22

KRISTINA BIEKER BRADY PHD
CLARK & ELBING LLP
176 FEDERAL STREET
BOSTON , MA 02110

COPY MAILED

JUL 30 2001

OFFICE OF PETITIONS
A/C PATENTS

In re Application of
Horvitz et al.
Application No. 08/984,178
Filed: December 3, 1997
Attorney Docket No. 01997198006

DECISION ON PETITION

This is a decision on the petition filed on June 18, 2001, pursuant to 37 C.F.R. §1.137(b), to revive the above-identified application.

The petition is **GRANTED.**

The above-identified application became abandoned for failure to properly reply within the meaning of 37 C.F.R. §1.113 to the final Office action mailed May 23, 2000. This Office action set a shortened statutory period for reply of three (3) months. A three (3) month extension of time was received on November 24, 2000 (with a certificate of mailing dated November 17, 2000), along with an amendment which was not entered as it failed to place the case in condition for allowance. Accordingly, the application became abandoned on November 24, 2000. A Notice of Abandonment was mailed on March 29, 2001.

37 CFR 1.137(b)(3) requires a statement that the entire delay in filing the required reply from the due date for the reply until the filing of a grantable petition pursuant to 37 CFR 1.137(b) was unintentional. Since the statement contained in the instant petition varies from the language required by 37 CFR 1.137(b)(3), the statement contained in the instant petition is being construed as the statement required by 37 CFR 1.137(b)(3) and petitioner must notify the Office if this is **not** a correct interpretation of the statement contained in the instant petition.

The petitioner has met the requirements to revive the above-identified application, pursuant to 37 CFR 1.137(b). Petitioner submitted the required reply in the form of a Notice of Appeal, the payment of the requisite fee, the payment of the petition fee, and has made a statement which is being construed as the proper statement of unintentional delay.

The Notice of Appeal filed on June 18, 2001, has been entered and made of record. Accordingly, the two (2) month period for filing the Appeal Brief, in triplicate, accompanied be the fee required by law, runs from the mailing date of this decision.

The application file is being forwarded to Technology Center 1600 for further processing.

Telephone inquiries specific to this decision should be directed to Petitions Attorney Paul Shanoski at (703) 305-0011.

Beverly M. Flanagan
Supervisory Petitions Examiner
Office of Petitions
Office of the Deputy Commissioner
for Patent Examination Policy

UNITED STATES PATENT AND TRADEMARK OFFICE

COMMISSIONER FOR PATENTS
UNITED STATES PATENT AND TRADEMARK OFFICE
WASHINGTON, D.C. 20231
www.uspto.gov

Paper No. 27

KRISTINA BIEKER BRADY PHD
CLARK & ELBING LLP
176 FEDERAL STREET
BOSTON MA 02110

COPY MAILED

NOV 0 6 2002

OFFICE OF PETITIONS

In re Application of
Horvitz, et al.
Application No. 08/984,178
Filed: December 3, 1997
Attorney Docket No. 01997198006

DECISION ON PETITION

This is a decision on the petition to revive the above-identified application pursuant to 37 CFR 1.137(b), filed August 23, 2002.

The petition is **GRANTED**.

The above-identified application became abandoned as a result of petitioner's failure to timely file an Appeal Brief. A final Office action was mailed on May 23, 2000, which set a shortened statutory period for reply of three months. On November 24, 2000, petitioner filed an amendment, made timely by including a Certificate of Mailing dated November 17, 2000, and by obtaining a three month extension of time. However, the amendment failed to place the application in condition for allowance.[1] Accordingly, the above identified application became abandoned on November 24, 2000. A Notice of Abandonment was mailed on March 29, 2001. Petitioner responded by filing a petition to revive under 37 CFR 1.137(b) on June 18, 2001. With the petition to revive, petitioner filed a reply in the form of a Notice of Appeal. The petition was granted in a decision mailed on July 30, 2001. Accordingly, petitioner had two months from the mailing of the July 30, 2001 decision, or until September 30, 2001, to file an Appeal Brief in triplicate. No Appeal Brief having been received, the above-identified application again became abandoned on October 1, 2001. A Notice of Abandonment was mailed on June 27, 2002.

Petitioner has satisfied the requirements for a grantable petition under 37 CFR 1.137(b). Petitioner paid the petition fee, submitted a reply to the January 21, 1999 final Office action in the form of a Continued Prosecution Application (CPA), and made a statement of unintentional delay. 37 CFR 1.137(b)(3) requires a statement that the entire delay in filing the required reply from the due date for the reply until the filing of a grantable petition pursuant to 37 CFR 1.137(b) was unintentional.

---

[1] An Advisory Action was mailed on March 1, 2001.

The statement contained in the instant petition varies from the language required by 37 CFR 1.137(b)(3). The statement contained in the instant petition is being construed as the statement required by 37 CFR 1.137(b)(3). Petitioner must notify the Office if this is **not** a correct interpretation of the statement contained in the instant petition.

The file does not indicate a change of address has been submitted, although the address given on the petition differs from the address of record. If appropriate, a change of address should be filed in accordance with MPEP 601.03. A courtesy copy of this decision is being mailed to the address given on the petition; however, the Office will mail all future correspondence solely to the address of record.

The application file is being forwarded to Technology Center 1600 for processing of the CPA filed August 23, 2002.

Telephone inquiries regarding this decision should be directed to the undersigned at (703) 305-0272.

Cliff Congo

Cliff Congo
Petitions Attorney
Office of Petitions
Office of the Deputy Commissioner
for Patent Examination Policy

cc: CLARK & ELBING LLP
101 FEDERAL STREET
BOSTON MA 02110

UNITED STATES PATENT AND TRADEMARK OFFICE

OCT 15 2004

Commissioner for Patents
United States Patent and Trademark Office
P.O. Box 1450
Alexandria, VA 22313-1450
www.uspto.gov

CLARK & ELBING LLP
101 FEDERAL STREET
BOSTON MA 02110

In re Application of:
Horvitz et al.
Serial No.: 08/984,178
Filed: December 3, 1997
Attorney Docket No.: 01997198006

DECISION ON PETITION TO WITHDRAW THE HOLDING OF ABANDONMENT

This is in response to applicants' petition under 37 CFR. § 1.181(a) and MPEP 711.03(c) filed on October 6, 2003, requesting withdrawal of the holding of abandonment of the above-identified application based on non–receipt of an Office action and to restore the application to a pending status. The delay in acting upon this petition is regretted.

A review of the file history shows that the Office mailed a Notice of Allowance and Issue Fee Due, setting a three-month statutory period for reply, and a Notice of Allowability, setting a three-month shortened statutory period for reply, to applicants on April 2, 2003. Applicants state that the Notices were never received and provide as evidence thereof a copy of the redacted docket record, showing non-receipt of the Notices. Applicants also provide a declaration attesting to the fact that the Notices were never received. Based on the evidence presented, it is concluded that applicants never received the Notices. In view thereof, the Notices mailed April 2, 2003 are vacated and the application is restored to pending status with the mailing date of this decision.

Applicants' petition is **GRANTED**. The application will be forwarded to the examiner for prompt mailing of a new Notice of Allowance and Issue Fee Due and the Notice of Allowability.

Should there be any questions about this decision, please contact Marianne C. Seidel by letter addressed to Director, TC 1600, at the address listed above, or by telephone at 571-272-0584 or by facsimile at 703-872-9306.

Marianne C. Seidel for

Jasemine C. Chambers
Director, Technology Center 1600

UNITED STATES PATENT AND TRADEMARK OFFICE

COMMISSIONER FOR PATENTS
UNITED STATES PATENT AND TRADEMARK OFFICE
P.O. BOX 1450
ALEXANDRIA, VA 22313-1450
WWW.USPTO.GOV

Paper No. 23

COPY MAILED

AUG 29 2003

OFFICE OF PETITIONS

CLARK & ELBING LLP
101 FEDERAL STREET
BOSTON, MA 02110

In re Application of
Wolfe et al.
Application No. 08/984,476
Filed: December 3, 1997
Attorney Docket No. 50128/002002

ON PETITION

This is a decision on the petition under 37 C.F.R. § 1.137(b), filed July 14, 2003, to revive the above-identified application.

The petition is **granted.**

The Notice of Appeal filed July 14, 2003, has been entered and made of record. Accordingly, the 2-month period for filing the appeal brief, in triplicate, accompanied by the fee required by law, runs from the date of this decision.

This application became abandoned for failure to timely reply within three months to the non-final Office action mailed April 23, 2001. A three-month extension of time under the provisions of 37 CFR 1.136(a) was timely obtained. Accordingly, this application became abandoned on January 24, 2002. A Notice of Abandonment was mailed on June 4, 2002.

Petitioner has met the requirements to revive the above-identified application pursuant to 37 CFR 1.137(b).

The file is now being forwarded to Technology Center 1600.

Telephone inquiries should be directed to Paralegal Liana Chase at (703) 306-0482.

Brian Dean, for
Frances Hicks
Petitions Examiner
Office of Petitions
Office of the Deputy Commissioner
for Patent Examination Policy

#28
10/15/02

UNITED STATES PATENT AND TRADEMARK OFFICE

COMMISSIONER FOR PATEN
UNITED STATES PATENT AND TRADEMARK OFFI
WASHINGTON, D.C. 2023
www.uspto.g

OCT 15 2002

Paper No. 28

Schwegman, Lundberg, Woessner & Kluth, P.A.
P.O. Box 2938
Minneapolis, Minnesota 55402

In re Application of: Jeffrey S. Mailloux et al.	)	
Application No. 08/984,562	)	**DECISION ON PETITION**
Filed: December 3, 1997	)	**UNDER 37 CFR § 1.103(a)**
For: MEMORY DEVICE FOR BURST OR	)	**REQUESTING SUSPENSION**
PIPELINED OPERATION WITH	)	**OF ACTION**
MODE SELECTION CIRCUITRY	)	

This is a decision on the petition under 37 CFR 1.103(a) filed on October 1, 2002 requesting suspension of action for a period of six (6) months in the instant application.

Petitioner has brought this issue to the attention of the undersigned by means of personal phone calls. Therefore, although this petition would ordinarily be treated at a lower level, the Director will address this petition in the interest of expediting prosecution.

The petition is **DENIED**.

BASIS OF OPINION

The relevant sections of M.P.E.P. §709 and of 37 C.F.R. §1.103 which relate to this petition are reproduced below:

M.P.E.P.§709 Suspension of Action

> A request that action in an application be delayed will be granted only under the provisions of 37 CFR 1.103, which provides for "Suspension of Action." A petition for suspension of action must be presented as a separate paper accompanied by the petition fee, must request a specific and reasonable period of suspension not greater than six months, and must present good and sufficient reasons why the suspension is necessary.

37 C.F. R. § 1.103 Suspension of action.

> (a) Suspension of action by the Office will be granted for good and sufficient cause and for a reasonable time specified upon petition by the applicant and, if such cause is not the fault of the Office, the payment of the fee set forth in § 1.17(h). Action will not be suspended when a response by the applicant to an Office action is required.

37 C.F. R. § 1.78 Claiming benefit of earlier filing date and cross references to other applications.

> (b) Where two or more applications filed by the same applicant contain conflicting claims, elimination of such claims from all but one application may be required in the absence of good and sufficient reason for their retention during pendency in more than one application.

DECISION

The petition states that applicants have appealed the rejections of all claims in related matter, Application Serial No. *08/984,561*, and that Applicant's representative believes that the issue presented in the appeal with respect to the ***Manning ('864)*** reference is "intertwined integrally with, and dispositive of" the rejections in this application. The fee set forth in 37 C.F.R. §1.117(h) of $130.00 was paid with this submission.

Prosecution of related applications proceed independently. The desire to get a ruling from the Board of Appeals on the patentability of claims prior to investing further resources in prosecuting related matters is not good and sufficient cause to delay prosecution.

Petitioner argues that USPTO resources would be conserved by awaiting a decision of the Board in the related application.

Firstly, prosecution efficiency is better served if the related issues are on Appeal before the Board concurrently and are noted in the required Appeal Brief section "Related appeals and interferences". This affords the board the opportunity to resolve the issues in a compact and efficient manner. Applicant can resolve the common issue expeditiously and efficiently by appealing the common rejection in all the applications.

Furthermore, Petitioner's argument is flawed for at least the following reasons:

(1) The common issue may never be reached in the appeal.

(a) The claims under appeal in the '561 application are rejected under 35 U.S.C. § 103(a) as unpatentable over ***Rosich ('964)*** in view of ***Manning ('864)***.

(b) The claims in the instant application (***'562***) are rejected under 35 U.S.C. § 102(e) as anticipated by ***Manning ('864)***.

Therefore, it is entirely possible that Applicant may prevail at the Board based on a deficiency in either the primary reference, ***Rosich ('964)***, or the propriety of the combination of the references. There may be no guidance from the Board as to the disputed interpretation of ***Manning ('864)*** . In such a case, there would have been no benefit achieved to balance against the harm of delayed prosecution.

(2) A board decision addressing Manning would not be binding as to other pending applications.

Even in the event that the panel hearing the appeal of ***'561*** addresses and rules on the specific issue of contention with respect to the ***Manning ('864)*** reference the result would not be binding in a separate application. Although the Board's reasoning will carry some weight with the Examiner of the other application it would have no precedential effect.

(3) Suspension of prosecution to resolve common issues of art is not in the interest of the USPTO or applicants.

The Office has in exceptional circumstances held groups of cases in abeyance to await resolution of a far reaching ***legal issue*** in which a Decision from the Court of Appeals for the Federal Circuit was imminent. However, if Applicants or Examiners could suspend action in a case whenever there are common issues of art application to be resolved there would be no predictability as to the course of progress of an application through the Patent examination process. Furthermore, such license has the potential of bringing the work of the Office to a standstill.

(4) Suspension is not likely to give petitioner the desired relief.

Suspension under 37 C.F. R. § 1.103 (a) is generally limited to a period of six months. The Appeal Brief in ***'561*** was filed on September 16, 2002. Before a Board Decision can be rendered an Examiner's Answer must be issued and the period for appellant to file an appeal brief must expire before jurisdiction will pass to the Board. The case will then be placed in the queue of cases awaiting hearing and decision. Therefore it is extremely unlikely that a decision will be rendered by a panel of the Board of Appeals prior to the expiration of six months from this decision.

CONCLUSION

Accordingly, since there is no showing of good and sufficient cause to further delay prosecution, as required under 37 C.F.R. §1.103(a), the **REQUEST** for **SUSPENSION** is **DENIED**.

Insofar as there are common elements within the disclosures and claims of related application, Applicant is reminded that (as per 37 C.F.R. §1.78(b)) if there are conflicting claims Applicant is required to either cancel the conflicting claims from all but one application or maintain a clear line of demarcation between the applications. (*See* MPEP § 822.)

The application file is being forwarded to the Examiner of record for appropriate action.

Stewart J. Levy, Group Director
Technology Center 2100
Computer Security, Architecture, and Software

UNITED STATES PATENT AND TRADEMARK OFFICE

COMMISSIONER FOR PATENTS
UNITED STATES PATENT AND TRADEMARK OFFICE
WASHINGTON, D.C. 20231
www.uspto.gov

Paper No. 24

STAAS & HALSEY LLP
700 11TH STREET, NW
SUITE 500
WASHINGTON, DC 20001

COPY MAILED

MAY 1 3 2002

OFFICE OF PETITIONS

In re Application of :
Masaki Watanabe, et al. :
Application No. 08/984,649 : ON PETITION
Filed: December 3, 1997 :
Attorney Docket No. 1083.1005D :

This is a decision on the petition, filed May 10, 2002, under 37 CFR 1.313(c)(2), to withdraw the above-identified application from issue after payment of the issue fee.

The petition is **GRANTED**.

The above-identified application is withdrawn from issue for consideration of a submission under 37 CFR 1.114 (request for continued examination). See 37 CFR 1.313(c)(2).

Petitioner is advised that the issue fee paid February 5, 2002 in the above-identified application cannot be refunded. If, however, the above-identified application is again allowed, petitioner may request that it be applied towards the issue fee required by the new Notice of Allowance. [1]

The application is being forwarded to Technology Center AU 2671 for further processing of the request for continued examination under 37 CFR 1.114.

Sherry D. Brinkley
Petitions Examiner
Office of Petitions
Office of the Deputy Commissioner
for Patent Examination Policy
(703) 305-9220

---

[1]The request to apply the issue fee to the new Notice must be made in writing and should be accompanied by the new Issue Fee Transmittal Form PTOL-85(b), along with a copy of this decision. Additionally, if the issue fee has increased from the previously paid issue fee, the balance due must be submitted. **Failure to *timely* request *in writing* that the previously paid issue fee be applied towards the new Notice and payment of any balance due will result in the abandonment of the application.**

UNITED STATES PATENT AND TRADEMARK OFFICE

Commissioner for Patents
United States Patent and Trademark Office
P.O. Box 1450
Alexandria, VA 22313-1450
www.uspto.gov

#14

COPY MAILED

AUG 28 2007

OFFICE OF PETITIONS

DUANE MORRIS LLP
PO BOX 5203
PRINCETON NJ 08543-5

In re Application of	:	
Menkhoff et al.	:	
Application No. 08/984,735	:	DECISION ON PETITION
Filed: December 4, 1997	:	
Attorney Docket No. C-DIT-1719	:	

This is a decision on the petition, originally filed February 9, 2000, which is being treated as a petition under 37 CFR 1.181 (no fee) requesting withdrawal of the holding of abandonment in the above-identified application.

The petition is **GRANTED**.

This application was held abandoned for failure to reply to the Notice of Allowance mailed July 22, 1999, which set a three (3) month shortened statutory period for reply. A Notice of Abandonment was mailed on December 29, 1999.

Petitioner asserts that the Office action dated July 22, 1999 was not received.

A review of the written record indicates no irregularity in the mailing of the Office action, and, in the absence of any irregularity, there is a strong presumption that the Office action was properly mailed to the practitioner at the address of record. This presumption may be overcome by a showing that the Office action was not in fact received. In this regard, the showing required to establish the failure to receive the Office action must consist of the following:

1. a statement from practitioner stating that the Office action was not received by the practitioner;

2. a statement from the practitioner attesting to the fact that a search of the file jacket and docket records indicates that the Office action was not received; and

3. a copy of the docket record where the non-received Office action would have been entered had it been received must be attached to and referenced in the practitioner's statement.

See MPEP § 711.03(c) under subheading "Petition to Withdraw Holding of Abandonment Based on Failure to Receive Office Action," and "Withdrawing the Holding of Abandonment When Office Actions Are Not Received," 1156 Official Gazette 53 (November 16, 1993).

The petition satisfies the above-stated requirements. Accordingly, the application was not abandoned in fact.

In view of the above, the Notice of Abandonment is hereby vacated and the holding of abandonment withdrawn.

The petition to revive under 37 CFR 1.137(b) filed May 14, 2007 is dismissed as moot. The petition fee will be credited to petitioner's deposit account as authorized.

This application is being referred to the Technology Center technical support staff of Art Unit 2100 for re-mailing the Office action of July 22, 1999. The period for reply will run from the mailing date of the Office action.

Liana Walsh
Petitions Examiner
Office of Petitions

Under the Paperwork Reduction Act of 1995, no persons are required to respond to a collection of information unless it displays valid OMB control number.

PETITION TO ACCEPT UNINTENTIONALLY DELAYED PAYMENT OF MAINTENANCE FEE IN AN EXPIRED PATENT (37 CFR 1.378(c))

Patent Number	Issue Date (YYYY-MM-DD)	Application Number	Filing Date (YYYY-MM-DD)	Docket Number (if applicable)
6770635	2004-08-03	08984947	1997-12-04	2862

CAUTION: Maintenance fee (and surcharge, if any) payment must correctly identify: (1) the patent number and (2) the application number of the actual U.S. application leading to issuance of that patent to ensure the fee(s) is/are associated with the correct patent. 37 CFR 1.366(c) and (d).

SMALL ENTITY
☒ Patentee claims, or has previously claimed, small entity status. See 37 CFR 1.27.

LOSS OF ENTITLEMENT TO SMALL ENTITY STATUS
☐ Patentee is no longer entitled to small entity status. See 37 CFR 1.27(g)

NOT Small Entity			Small Entity		
	Fee	Code		Fee	Code
○	3 ½ year	(1551)	◉	3 ½ year	(2551)
○	7 ½ year	(1552)	○	7 ½ year	(2552)
○	11 ½ year	(1553)	○	11 ½ year	(2553)

SURCHARGE
The surcharge required by 37 CFR 1.20(i)(2) (Fee Code 1558) must be paid as a condition of accepting unintentionally delayed payment of the maintenance fee.

MAINTENANCE FEE (37 CFR 1.20(e)-(g))
The appropriate maintenance fee must be submitted with this petition.

STATEMENT
THE UNDERSIGNED CERTIFIES THAT THE DELAY IN PAYMENT OF THE MAINTENANCE FEE TO THIS PATENT WAS UNINTENTIONAL

PETITIONER(S) REQUEST THAT THE DELAYED PAYMENT OF THE MAINTENANCE FEE BE ACCEPTED AND THE PATENT REINSTATED

THIS PORTION MUST BE COMPLETED BY THE SIGNATORY OR SIGNATORIES

37 CFR 1.378(d) states: "Any petition under this section must be signed by an attorney or agent registered to practice before the Patent and Trademark Office, or by the patentee, the assignee, or other party in interest."

I certify, in accordance with 37 CFR 1.4(d)(4) that I am

◉ An attorney or agent registered to practice before the Patent and Trademark Office

○ A sole patentee

○ A joint patentee; I certify that I am authorized to sign this submission on behalf of all the other patentees.

○ A joint patentee; all of whom are signing this e-petition

○ The assignee of record of the entire interest

Patent Practitioner			
A signature of the applicant or representative is required in accordance with 37 CFR 1.33 and 10.18. Please see 37 CFR 1.4(d) for the form of the signature			
Signature	/Charles Fallow/	Date (YYYY-MM-DD)	2009-09-25
Name	Charles W. Fallow	Registration Number	28946

This collection of information is required by 37 CFR 1.378(c). The information is required to obtain or retain a benefit by the public which is to file (and by the USPTO to process) an application. Confidentiality is governed by 35 U.S.C. 122 and 37 CFR 1.11 and 1.14. This collection is estimated to take 1 hour to complete, including gathering, preparing, and submitting the completed application form to the USPTO. Time will vary depending upon the individual case. Any comments on the amount of time you require to complete this form and/ or suggestions for reducing this burden, should be sent to the Chief Information Officer, U.S. Patent and Trademark Office, U.S. Department of Commerce, P.O. Box 1450, Alexandria, VA 22313-1450. DO NOT SEND FEES OR COMPLETED FORMS TO THIS ADDRESS. **This form can only be used when in conjunction with EFS-Web. If this form is mailed to the USPTO, it may cause delays in reinstating the patent.**

Privacy Act Statement

The Privacy Act of 1974 (P.L. 93-579) requires that you be given certain information in connection with your submission of the attached form related to a patent application or patent. Accordingly, pursuant to the requirements of the Act, please be advised that: (1) the general authority for the collection of this information is 35 U.S.C. 2(b)(2); (2) furnishing of the information solicited is voluntary; and (3) the principal purpose for which the information is used by the U.S. Patent and Trademark Office is to process and/or examine your submission related to a patent application or patent. If you do not furnish the requested information, the U.S. Patent and Trademark Office may not be able to process and/or examine your submission, which may result in termination of proceedings or abandonment of the application or expiration of the patent.

The information provided by you in this form will be subject to the following routine uses:

1. The information on this form will be treated confidentially to the extent allowed under the Freedom of Information Act (5 U.S.C. 552) and the Privacy Act (5 U.S.C. 552a). Records from this system of records may be disclosed to the Department of Justice to determine whether the Freedom of Information Act requires disclosure of these record s.

2. A record from this system of records may be disclosed, as a routine use, in the course of presenting evidence to a court, magistrate, or administrative tribunal, including disclosures to opposing counsel in the course of settlement negotiations.

3. A record in this system of records may be disclosed, as a routine use, to a Member of Congress submitting a request involving an individual, to whom the record pertains, when the individual has requested assistance from the Member with respect to the subject matter of the record.

4. A record in this system of records may be disclosed, as a routine use, to a contractor of the Agency having need for the information in order to perform a contract. Recipients of information shall be required to comply with the requirements of the Privacy Act of 1974, as amended, pursuant to 5 U.S.C. 552a(m).

5. A record related to an International Application filed under the Patent Cooperation Treaty in this system of records may be disclosed, as a routine use, to the International Bureau of the World Intellectual Property Organization, pursuant to the Patent Cooperation Treaty.

6. A record in this system of records may be disclosed, as a routine use, to another federal agency for purposes of National Security review (35 U.S.C. 181) and for review pursuant to the Atomic Energy Act (42 U.S.C. 218(c)).

7. A record from this system of records may be disclosed, as a routine use, to the Administrator, General Services, or his/her designee, during an inspection of records conducted by GSA as part of that agency's responsibility to recommend improvements in records management practices and programs, under authority of 44 U.S.C. 2904 and 2906. Such disclosure shall be made in accordance with the GSA regulations governing inspection of records for this purpose, and any other relevant (i.e., GSA or Commerce) directive. Such disclosure shall not be used to make determinations about individuals.

8. A record from this system of records may be disclosed, as a routine use, to the public after either publication of the application pursuant to 35 U.S.C. 122(b) or issuance of a patent pursuant to 35 U.S.C. 151. Further, a record may be disclosed, subject to the limitations of 37 CFR 1.14, as a routine use, to the public if the record was filed in an application which became abandoned or in which the proceedings were terminated and which application is referenced by either a published application, an application open to public inspections or an issued patent.

9. A record from this system of records may be disclosed, as a routine use, to a Federal, State, or local law enforcement agency, if the USPTO becomes aware of a violation or potential violation of law or regulation.

UNITED STATES PATENT AND TRADEMARK OFFICE

Commissioner for Patents
United States Patent and Trademark Office
P.O. Box 1450
Alexandria, VA 22313-1450
www.uspto.gov

In re Patent No. 6770635
Issue Date: August 3,2004
Application No. 08984947
Filed: December 4,1997
Attorney Docket No. JWB-2862

:
:DECISION GRANTING PETITION
:UNDER 37 CFR 1.378(c)
:

This is a decision on the electronic petition, filed September 25,2009 ,under 37 CFR 1.378(c) to accept the unintentionally delayed payment of the 3.5 year maintenance fee for the above-identified patent.

The petition is **GRANTED**.

The maintenance fee is accepted, and the above-identified patent reinstated as of September 25,2009 . This decision also constitutes notice that the fee has been accepted. An electronic copy of the petition and this decision has been created as an entry in the Image File Wrapper. Nevertheless, petitioner should print and retain an independent copy.

Telephone inquiries related to this electronic decision should be directed to the Electronic Business Center at 1-866-217-9197.

UNITED STATES PATENT AND TRADEMARK OFFICE

COMMISSIONER FOR PATENTS
UNITED STATES PATENT AND TRADEMARK OFFICE
WASHINGTON, D.C. 20231
www.uspto.gov

Paper No. 27

Morrison & Foerster
755 Page Mill Road
Palo Alto, California 94304-1018

OCT - 9 2002

In re Application of	)	
Baer et al.	)	
Application No. 08/984,979	)	DECISION ON REQUEST TO
Filed: December 4, 1997	)	WITHDRAW FROM RECORD
Attorney Docket: 485772000400	)	

This is a decision on the request to withdraw as attorney of record under 37 C.F.R. § 1.36, filed September 23, 2002.

A grantable request to withdraw as attorney of record should indicate thereon the present mailing addresses of the attorney(s) who is/are withdrawing from the record and of the applicant. The request for withdrawal must be signed by every attorney seeking to withdraw or contain a clear indication that one attorney is signing on behalf of another/others. A request to withdraw will not be approved unless at least 30 (thirty) days would remain between the date of approval and the later of the expiration date of a time to file a response or the expiration date of the maximum time period which can be extended under 37 C.F.R. § 1.136(a).

The request is signed by Thomas E. Ciotti on behalf of all attorneys of record.

The request is APPROVED.

All future communications from the Office will be directed to the below-listed address until otherwise notified by applicant.

Hien H. Phan, Special Program Examiner
TC 2800 - Semiconductor, Electrical and
Optical Systems and Components

cc: Rimas Lukas
465 Kelly Avenue, #E
Half Moon Bay, California 94019

UNITED STATES PATENT AND TRADEMARK OFFICE

Commissioner for Patents
United States Patent and Trademark Office
P.O. Box 1450
Alexandria, VA 22313-1450
www.uspto.gov

In re Patent No. 6062348
Issue Date: May 16,2000
Application No. 08985029
Filed: December 4,1997
Attorney Docket No. IC97-01

:
:DECISION GRANTING PETITION
:UNDER 37 CFR 1.378(c)
:

This is a decision on the electronic petition, filed January 28,2010 ,under 37 CFR 1.378(c) to accept the unintentionally delayed payment of the 7.5 year maintenance fee for the above-identified patent.

The petition is **GRANTED**.

The maintenance fee is accepted, and the above-identified patent reinstated as of January 28,2010 . This decision also constitutes notice that the fee has been accepted. An electronic copy of the petition and this decision has been created as an entry in the Image File Wrapper. Nevertheless, petitioner should print and retain an independent copy.

Telephone inquiries related to this electronic decision should be directed to the Electronic Business Center at 1-866-217-9197.

PTO/SB/66 (03-09)
Approved for use through 03/31/2012. OMB 0651-0016
U.S. Patent and Trademark Office: U.S. DEPARTMENT OF COMMERCE
Under the Paperwork Reduction Act of 1995, no persons are required to respond to a collection of information unless it displays valid OMB control number.

PETITION TO ACCEPT UNINTENTIONALLY DELAYED PAYMENT OF MAINTENANCE FEE IN AN EXPIRED PATENT (37 CFR 1.378(c))

Patent Number	Issue Date (YYYY-MM-DD)	Application Number	Filing Date (YYYY-MM-DD)	Docket Number (if applicable)
6062348	2000-05-16	08985029	1997-12-04	

CAUTION: Maintenance fee (and surcharge, if any) payment must correctly identify: (1) the patent number and (2) the application number of the actual U.S. application leading to issuance of that patent to ensure the fee(s) is/are associated with the correct patent. 37 CFR 1.366(c) and (d).

SMALL ENTITY
☒ Patentee claims, or has previously claimed, small entity status. See 37 CFR 1.27.

LOSS OF ENTITLEMENT TO SMALL ENTITY STATUS
☐ Patentee is no longer entitled to small entity status. See 37 CFR 1.27(g)

NOT Small Entity		Small Entity	
Fee	Code	Fee	Code
○ 3 ½ year	(1551)	○ 3 ½ year	(2551)
○ 7 ½ year	(1552)	◉ 7 ½ year	(2552)
○ 11 ½ year	(1553)	○ 11 ½ year	(2553)

SURCHARGE
The surcharge required by 37 CFR 1.20(i)(2) (Fee Code 1558) must be paid as a condition of accepting unintentionally delayed payment of the maintenance fee.

MAINTENANCE FEE (37 CFR 1.20(e)-(g))
The appropriate maintenance fee must be submitted with this petition.

STATEMENT
THE UNDERSIGNED CERTIFIES THAT THE DELAY IN PAYMENT OF THE MAINTENANCE FEE TO THIS PATENT WAS UNINTENTIONAL

PETITIONER(S) REQUEST THAT THE DELAYED PAYMENT OF THE MAINTENANCE FEE BE ACCEPTED AND THE PATENT REINSTATED

THIS PORTION MUST BE COMPLETED BY THE SIGNATORY OR SIGNATORIES

37 CFR 1.378(d) states: "Any petition under this section must be signed by an attorney or agent registered to practice before the Patent and Trademark Office, or by the patentee, the assignee, or other party in interest."

I certify, in accordance with 37 CFR 1.4(d)(4) that I am

○ An attorney or agent registered to practice before the Patent and Trademark Office

◉ A sole patentee

○ A joint patentee; I certify that I am authorized to sign this submission on behalf of all the other patentees.

○ A joint patentee; all of whom are signing this e-petition

○ The assignee of record of the entire interest

Sole Patentee			
A signature of the applicant or representative is required in accordance with 37 CFR 1.33 and 10.18. Please see 37 CFR 1.4(d) for the form of the signature.			
Signature	/John H. Atkinson/	Date (YYYY-MM-DD)	2009-01-28
Name	John H. Atkinson		

This collection of information is required by 37 CFR 1.378(c). The information is required to obtain or retain a benefit by the public which is to file (and by the USPTO to process) an application. Confidentiality is governed by 35 U.S.C. 122 and 37 CFR 1.11 and 1.14. This collection is estimated to take 1 hour to complete, including gathering, preparing, and submitting the completed application form to the USPTO. Time will vary depending upon the individual case. Any comments on the amount of time you require to complete this form and/or suggestions for reducing this burden, should be sent to the Chief Information Officer, U.S. Patent and Trademark Office, U.S. Department of Commerce, P.O. Box 1450, Alexandria, VA 22313-1450. DO NOT SEND FEES OR COMPLETED FORMS TO THIS ADDRESS. **This form can only be used when in conjunction with EFS-Web. If this form is mailed to the USPTO, it may cause delays in reinstating the patent.**

Privacy Act Statement

The Privacy Act of 1974 (P.L. 93-579) requires that you be given certain information in connection with your submission of the attached form related to a patent application or patent. Accordingly, pursuant to the requirements of the Act, please be advised that: (1) the general authority for the collection of this information is 35 U.S.C. 2(b)(2); (2) furnishing of the information solicited is voluntary; and (3) the principal purpose for which the information is used by the U.S. Patent and Trademark Office is to process and/or examine your submission related to a patent application or patent. If you do not furnish the requested information, the U.S. Patent and Trademark Office may not be able to process and/or examine your submission, which may result in termination of proceedings or abandonment of the application or expiration of the patent.

The information provided by you in this form will be subject to the following routine uses:

1. The information on this form will be treated confidentially to the extent allowed under the Freedom of Information Act (5 U.S.C. 552) and the Privacy Act (5 U.S.C. 552a). Records from this system of records may be disclosed to the Department of Justice to determine whether the Freedom of Information Act requires disclosure of these records.

2. A record from this system of records may be disclosed, as a routine use, in the course of presenting evidence to a court, magistrate, or administrative tribunal, including disclosures to opposing counsel in the course of settlement negotiations.

3. A record in this system of records may be disclosed, as a routine use, to a Member of Congress submitting a request involving an individual, to whom the record pertains, when the individual has requested assistance from the Member with respect to the subject matter of the record.

4. A record in this system of records may be disclosed, as a routine use, to a contractor of the Agency having need for the information in order to perform a contract. Recipients of information shall be required to comply with the requirements of the Privacy Act of 1974, as amended, pursuant to 5 U.S.C. 552a(m).

5. A record related to an International Application filed under the Patent Cooperation Treaty in this system of records may be disclosed, as a routine use, to the International Bureau of the World Intellectual Property Organization, pursuant to the Patent Cooperation Treaty.

6. A record in this system of records may be disclosed, as a routine use, to another federal agency for purposes of National Security review (35 U.S.C. 181) and for review pursuant to the Atomic Energy Act (42 U.S.C. 218(c)).

7. A record from this system of records may be disclosed, as a routine use, to the Administrator, General Services, or his/her designee, during an inspection of records conducted by GSA as part of that agency's responsibility to recommend improvements in records management practices and programs, under authority of 44 U.S.C. 2904 and 2906. Such disclosure shall be made in accordance with the GSA regulations governing inspection of records for this purpose, and any other relevant (i.e., GSA or Commerce) directive. Such disclosure shall not be used to make determinations about individuals.

8. A record from this system of records may be disclosed, as a routine use, to the public after either publication of the application pursuant to 35 U.S.C. 122(b) or issuance of a patent pursuant to 35 U.S.C. 151. Further, a record may be disclosed, subject to the limitations of 37 CFR 1.14, as a routine use, to the public if the record was filed in an application which became abandoned or in which the proceedings were terminated and which application is referenced by either a published application, an application open to public inspections or an issued patent.

9. A record from this system of records may be disclosed, as a routine use, to a Federal, State, or local law enforcement agency, if the USPTO becomes aware of a violation or potential violation of law or regulation.

UNITED STATES PATENT AND TRADEMARK OFFICE

Commissioner for Patents
United States Patent and Trademark Office
P.O. Box 1450
Alexandria, VA 22313-1450
www.uspto.gov

In re Patent No. 6071294
Issue Date: June 6,2000
Application No. 08985384
Filed: December 4,1997
Attorney Docket No. 10971750-1

:
:DECISION GRANTING PETITION
:UNDER 37 CFR 1.378(c)
:

This is a decision on the electronic petition, filed August 18,2008 ,under 37 CFR 1.378(c) to accept the unintentionally delayed payment of the 7.5 year maintenance fee for the above-identified patent.

The petition is **GRANTED**.

The maintenance fee is accepted, and the above-identified patent reinstated as of August 18,2008 . This decision also constitutes notice that the fee has been accepted. An electronic copy of the petition and this decision has been created as an entry in the Image File Wrapper. Nevertheless, petitioner should print and retain an independent copy.

Telephone inquiries related to this electronic decision should be directed to the Electronic Business Center at 1-866-217-9197.

Under the Paperwork Reduction Act of 1995, no persons are required to respond to a collection of information unless it displays valid OMB control number.

PETITION TO ACCEPT UNINTENTIONALLY DELAYED PAYMENT OF MAINTENANCE FEE IN AN EXPIRED PATENT (37 CFR 1.378(c))

Patent Number	Issue Date (YYYY-MM-DD)	Application Number	Filing Date (YYYY-MM-DD)	Docket Number (if applicable)
6071294	2000-06-06	08985384	1997-12-04	10971750-01-US

CAUTION: Maintenance fee (and surcharge, if any) payment must correctly identify: (1) the patent number and (2) the application number of the actual U.S. application leading to issuance of that patent to ensure the fee(s) is/are associated with the correct patent. 37 CFR 1.366(c) and (d).

SMALL ENTITY
☐ Patentee claims, or has previously claimed, small entity status. See 37 CFR 1.27.

LOSS OF ENTITLEMENT TO SMALL ENTITY STATUS
☐ Patentee is no longer entitled to small entity status. See 37 CFR 1.27(g)

NOT Small Entity			Small Entity		
	Fee	Code		Fee	Code
○	3 ½ year	(1551)	○	3 ½ year	(2551)
◉	7 ½ year	(1552)	○	7 ½ year	(2552)
○	11 ½ year	(1553)	○	11 ½ year	(2553)

SURCHARGE
The surcharge required by 37 CFR 1.20(i)(2) (Fee Code 1558) must be paid as a condition of accepting unintentionally delayed payment of the maintenance fee.

MAINTENANCE FEE (37 CFR 1.20(e)-(g))
The appropriate maintenance fee must be submitted with this petition.

STATEMENT
THE UNDERSIGNED CERTIFIES THAT THE DELAY IN PAYMENT OF THE MAINTENANCE FEE TO THIS PATENT WAS UNINTENTIONAL

PETITIONER(S) REQUEST THAT THE DELAYED PAYMENT OF THE MAINTENANCE FEE BE ACCEPTED AND THE PATENT REINSTATED

THIS PORTION MUST BE COMPLETED BY THE SIGNATORY OR SIGNATORIES

37 CFR 1.378(d) states: "Any petition under this section must be signed by an attorney or agent registered to practice before the Patent and Trademark Office, or by the patentee, the assignee, or other party in interest."

I certify, in accordance with 37 CFR 1.4(d)(4) that I am

◉ An attorney or agent registered to practice before the Patent and Trademark Office

○ A sole patentee

○ A joint patentee; I certify that I am authorized to sign this submission on behalf of all the other patentees.

○ A joint patentee; all of whom are signing this e-petition

○ The assignee of record of the entire interest

Patent Practitioner			
A signature of the applicant or representative is required in accordance with 37 CFR 1.33 and 10.18. Please see 37 CFR 1.4(d) for the form of the signature			
Signature	/James S. Keddie, Reg. No. 48,920/	Date (YYYY-MM-DD)	2008-08-18
Name	James S. Keddie	Registration Number	48920

This collection of information is required by 37 CFR 1.378(c). The information is required to obtain or retain a benefit by the public which is to file (and by the USPTO to process) an application. Confidentiality is governed by 35 U.S.C. 122 and 37 CFR 1.11 and 1.14. This collection is estimated to take 1 hour to complete, including gathering, preparing, and submitting the completed application form to the USPTO. Time will vary depending upon the individual case. Any comments on the amount of time you require to complete this form and/ or suggestions for reducing this burden, should be sent to the Chief Information Officer, U.S. Patent and Trademark Office, U.S. Department of Commerce, P.O. Box 1450, Alexandria, VA 22313-1450. DO NOT SEND FEES OR COMPLETED FORMS TO THIS ADDRESS. **This form can only be used when in conjunction with EFS-Web. If this form is mailed to the USPTO, it may cause delays in reinstating the patent.**

Privacy Act Statement

The Privacy Act of 1974 (P.L. 93-579) requires that you be given certain information in connection with your submission of the attached form related to a patent application or patent. Accordingly, pursuant to the requirements of the Act, please be advised that: (1) the general authority for the collection of this information is 35 U.S.C. 2(b)(2); (2) furnishing of the information solicited is voluntary; and (3) the principal purpose for which the information is used by the U.S. Patent and Trademark Office is to process and/or examine your submission related to a patent application or patent. If you do not furnish the requested information, the U.S. Patent and Trademark Office may not be able to process and/or examine your submission, which may result in termination of proceedings or abandonment of the application or expiration of the patent.

The information provided by you in this form will be subject to the following routine uses:

1. The information on this form will be treated confidentially to the extent allowed under the Freedom of Information Act (5 U.S.C. 552) and the Privacy Act (5 U.S.C. 552a). Records from this system of records may be disclosed to the Department of Justice to determine whether the Freedom of Information Act requires disclosure of these record s.

2. A record from this system of records may be disclosed, as a routine use, in the course of presenting evidence to a court, magistrate, or administrative tribunal, including disclosures to opposing counsel in the course of settlement negotiations.

3. A record in this system of records may be disclosed, as a routine use, to a Member of Congress submitting a request involving an individual, to whom the record pertains, when the individual has requested assistance from the Member with respect to the subject matter of the record.

4. A record in this system of records may be disclosed, as a routine use, to a contractor of the Agency having need for the information in order to perform a contract. Recipients of information shall be required to comply with the requirements of the Privacy Act of 1974, as amended, pursuant to 5 U.S.C. 552a(m).

5. A record related to an International Application filed under the Patent Cooperation Treaty in this system of records may be disclosed, as a routine use, to the International Bureau of the World Intellectual Property Organization, pursuant to the Patent Cooperation Treaty.

6. A record in this system of records may be disclosed, as a routine use, to another federal agency for purposes of National Security review (35 U.S.C. 181) and for review pursuant to the Atomic Energy Act (42 U.S.C. 218(c)).

7. A record from this system of records may be disclosed, as a routine use, to the Administrator, General Services, or his/her designee, during an inspection of records conducted by GSA as part of that agency's responsibility to recommend improvements in records management practices and programs, under authority of 44 U.S.C. 2904 and 2906. Such disclosure shall be made in accordance with the GSA regulations governing inspection of records for this purpose, and any other relevant (i.e., GSA or Commerce) directive. Such disclosure shall not be used to make determinations about individuals.

8. A record from this system of records may be disclosed, as a routine use, to the public after either publication of the application pursuant to 35 U.S.C. 122(b) or issuance of a patent pursuant to 35 U.S.C. 151. Further, a record may be disclosed, subject to the limitations of 37 CFR 1.14, as a routine use, to the public if the record was filed in an application which became abandoned or in which the proceedings were terminated and which application is referenced by either a published application, an application open to public inspections or an issued patent.

9. A record from this system of records may be disclosed, as a routine use, to a Federal, State, or local law enforcement agency, if the USPTO becomes aware of a violation or potential violation of law or regulation.

UNITED STATES PATENT AND TRADEMARK OFFICE

Commissioner for Patents
United States Patent and Trademark Office
P.O. Box 1450
Alexandria, VA 22313-1450
www.uspto.gov

In re Patent No. 6156320
Issue Date: December 5,2000
Application No. 08986007
Filed: December 5,1997
Attorney Docket No. HPA-004.02

:
:DECISION GRANTING PETITION
:UNDER 37 CFR 1.378(c)
:

This is a decision on the electronic petition, filed August 19,2009 ,under 37 CFR 1.378(c) to accept the unintentionally delayed payment of the 7.5 year maintenance fee for the above-identified patent.

The petition is **GRANTED**.

The maintenance fee is accepted, and the above-identified patent reinstated as of August 19,2009 .
This decision also constitutes notice that the fee has been accepted. An electronic copy of the petition and this decision has been created as an entry in the Image File Wrapper. Nevertheless, petitioner should print and retain an independent copy.

Telephone inquiries related to this electronic decision should be directed to the Electronic Business Center at 1-866-217-9197.

PTO/SB/66 (03-09)
Approved for use through 03/31/2012. OMB 0651-0016
U.S. Patent and Trademark Office: U.S. DEPARTMENT OF COMMERCE
Under the Paperwork Reduction Act of 1995, no persons are required to respond to a collection of information unless it displays valid OMB control number.

PETITION TO ACCEPT UNINTENTIONALLY DELAYED PAYMENT OF MAINTENANCE FEE IN AN EXPIRED PATENT (37 CFR 1.378(c))

Patent Number	Issue Date (YYYY-MM-DD)	Application Number	Filing Date (YYYY-MM-DD)	Docket Number (if applicable)
6156320	2000-12-05	08986007	1997-12-05	HPA-004.02

CAUTION: Maintenance fee (and surcharge, if any) payment must correctly identify: (1) the patent number and (2) the application number of the actual U.S. application leading to issuance of that patent to ensure the fee(s) is/are associated with the correct patent. 37 CFR 1.366(c) and (d).

SMALL ENTITY
☒ Patentee claims, or has previously claimed, small entity status. See 37 CFR 1.27.

LOSS OF ENTITLEMENT TO SMALL ENTITY STATUS
☐ Patentee is no longer entitled to small entity status. See 37 CFR 1.27(g)

NOT Small Entity		Small Entity	
Fee	Code	Fee	Code
○ 3 ½ year	(1551)	○ 3 ½ year	(2551)
○ 7 ½ year	(1552)	◉ 7 ½ year	(2552)
○ 11 ½ year	(1553)	○ 11 ½ year	(2553)

SURCHARGE
The surcharge required by 37 CFR 1.20(i)(2) (Fee Code 1558) must be paid as a condition of accepting unintentionally delayed payment of the maintenance fee.

MAINTENANCE FEE (37 CFR 1.20(e)-(g))
The appropriate maintenance fee must be submitted with this petition.

STATEMENT
THE UNDERSIGNED CERTIFIES THAT THE DELAY IN PAYMENT OF THE MAINTENANCE FEE TO THIS PATENT WAS UNINTENTIONAL

PETITIONER(S) REQUEST THAT THE DELAYED PAYMENT OF THE MAINTENANCE FEE BE ACCEPTED AND THE PATENT REINSTATED

THIS PORTION MUST BE COMPLETED BY THE SIGNATORY OR SIGNATORIES

37 CFR 1.378(d) states: "Any petition under this section must be signed by an attorney or agent registered to practice before the Patent and Trademark Office, or by the patentee, the assignee, or other party in interest."

I certify, in accordance with 37 CFR 1.4(d)(4) that I am

◉ An attorney or agent registered to practice before the Patent and Trademark Office

○ A sole patentee

○ A joint patentee; I certify that I am authorized to sign this submission on behalf of all the other patentees.

○ A joint patentee; all of whom are signing this e-petition

○ The assignee of record of the entire interest

Patent Practitioner			
A signature of the applicant or representative is required in accordance with 37 CFR 1.33 and 10.18. Please see 37 CFR 1.4(d) for the form of the signature			
Signature	/Kendal M. Sheets/	Date (YYYY-MM-DD)	2009-08-19
Name	Kendal M. Sheets	Registration Number	47077

This collection of information is required by 37 CFR 1.378(c). The information is required to obtain or retain a benefit by the public which is to file (and by the USPTO to process) an application. Confidentiality is governed by 35 U.S.C. 122 and 37 CFR 1.11 and 1.14. This collection is estimated to take 1 hour to complete, including gathering, preparing, and submitting the completed application form to the USPTO. Time will vary depending upon the individual case. Any comments on the amount of time you require to complete this form and/ or suggestions for reducing this burden, should be sent to the Chief Information Officer, U.S. Patent and Trademark Office, U.S. Department of Commerce, P.O. Box 1450, Alexandria, VA 22313-1450. DO NOT SEND FEES OR COMPLETED FORMS TO THIS ADDRESS. **This form can only be used when in conjunction with EFS-Web. If this form is mailed to the USPTO, it may cause delays in reinstating the patent.**

Privacy Act Statement

The Privacy Act of 1974 (P.L. 93-579) requires that you be given certain information in connection with your submission of the attached form related to a patent application or patent. Accordingly, pursuant to the requirements of the Act, please be advised that: (1) the general authority for the collection of this information is 35 U.S.C. 2(b)(2); (2) furnishing of the information solicited is voluntary; and (3) the principal purpose for which the information is used by the U.S. Patent and Trademark Office is to process and/or examine your submission related to a patent application or patent. If you do not furnish the requested information, the U.S. Patent and Trademark Office may not be able to process and/or examine your submission, which may result in termination of proceedings or abandonment of the application or expiration of the patent.

The information provided by you in this form will be subject to the following routine uses:

1. The information on this form will be treated confidentially to the extent allowed under the Freedom of Information Act (5 U.S.C. 552) and the Privacy Act (5 U.S.C. 552a). Records from this system of records may be disclosed to the Department of Justice to determine whether the Freedom of Information Act requires disclosure of these records.

2. A record from this system of records may be disclosed, as a routine use, in the course of presenting evidence to a court, magistrate, or administrative tribunal, including disclosures to opposing counsel in the course of settlement negotiations.

3. A record in this system of records may be disclosed, as a routine use, to a Member of Congress submitting a request involving an individual, to whom the record pertains, when the individual has requested assistance from the Member with respect to the subject matter of the record.

4. A record in this system of records may be disclosed, as a routine use, to a contractor of the Agency having need for the information in order to perform a contract. Recipients of information shall be required to comply with the requirements of the Privacy Act of 1974, as amended, pursuant to 5 U.S.C. 552a(m).

5. A record related to an International Application filed under the Patent Cooperation Treaty in this system of records may be disclosed, as a routine use, to the International Bureau of the World Intellectual Property Organization, pursuant to the Patent Cooperation Treaty.

6. A record in this system of records may be disclosed, as a routine use, to another federal agency for purposes of National Security review (35 U.S.C. 181) and for review pursuant to the Atomic Energy Act (42 U.S.C. 218(c)).

7. A record from this system of records may be disclosed, as a routine use, to the Administrator, General Services, or his/her designee, during an inspection of records conducted by GSA as part of that agency's responsibility to recommend improvements in records management practices and programs, under authority of 44 U.S.C. 2904 and 2906. Such disclosure shall be made in accordance with the GSA regulations governing inspection of records for this purpose, and any other relevant (i.e., GSA or Commerce) directive. Such disclosure shall not be used to make determinations about individuals.

8. A record from this system of records may be disclosed, as a routine use, to the public after either publication of the application pursuant to 35 U.S.C. 122(b) or issuance of a patent pursuant to 35 U.S.C. 151. Further, a record may be disclosed, subject to the limitations of 37 CFR 1.14, as a routine use, to the public if the record was filed in an application which became abandoned or in which the proceedings were terminated and which application is referenced by either a published application, an application open to public inspections or an issued patent.

9. A record from this system of records may be disclosed, as a routine use, to a Federal, State, or local law enforcement agency, if the USPTO becomes aware of a violation or potential violation of law or regulation.

UNITED STATES DEPARTMENT OF COMMERCE
Patent and Trademark Office
ASSISTANT SECRETARY OF COMMERCE AND
COMMISSIONER OF PATENTS AND TRADEMARKS
Washington, DC 2023

October 23, 2000

BAKER BOTTS L.L.P.
00 OCT 30 PM 1:01
TO

Peter A. Businger
Baker & Botts
30 Rockefeller Plaza
New York, NY 10112-0228

FAX RECEIVED
SEP - 5 2001
PETITIONS OFFICE

In re application of:
Edward F. Leonard, et al
Serial No.: 08/986,552
Filed: December 8, 1997
For: RECOVERY OF FETAL CELLS FROM MATERNAL BLOOD USING CHAOTIC ADVECTION

DECISION ON PETITION

In response to the CPA papers submitted August 17, 1998, for continuation of the above application.

The CPA papers under 37 C.F.R 1.53(d) are improper. See: MPEP 201.06(d) a CPA is filed once the prior nonprovisonal application is completed. The fee for the CPA will be credited to Deposit Account 02-4377.

Telephone inquiries concerning this matter may be directed to Doshie E. Day at (703) 308-3640.

Doshie Day

Doshie E. Day
Program Management Assistant
Office Initial Patent Examination

11399

OIPE JC98
SEP 1 0 2001
PATENT & TRADEMARK OFFICE

UNITED STATES DEPARTMENT OF COMMERCE
Patent and Trademark Office
ASSISTANT SECRETARY OF COMMERCE AND
COMMISSIONER OF PATENTS AND TRADEMARKS
Washington, DC 2023

BAKER BOTTS L.L.P.
00 OCT 30 PM 1:01
TO

October 23, 2000

Peter A. Businger
Baker & Botts
30 Rockefeller Plaza
New York, NY 10112-0228

In re application of:
Edward F. Leonard, et al
Serial No.: 08/986,552
Filed: December 8, 1997
For: RECOVERY OF FETAL CELLS FROM MATERNAL BLOOD USING CHAOTIC ADVECTION

DECISION ON PETITION

In response to the CPA papers submitted August 17, 1998, for continuation of the above application.

The CPA papers under 37 C.F.R 1.53(d) are improper. See: MPEP 201.06(d) a CPA is filed once the prior nonprovisonal application is completed. The fee for the CPA will be credited to Deposit Account 02-4377.

Telephone inquiries concerning this matter may be directed to Doshie E. Day at (703) 308-3640.

Doshie Day

Doshie E. Day
Program Management Assistant
Office Initial Patent Examination

RECEIVED
SEP 1 4 2001
OFFICE OF PETITIONS
DEPUTY A/C PATENTS

UNITED STATES PATENT AND TRADEMARK OFFICE

COMMISSIONER FOR PATENTS
UNITED STATES PATENT AND TRADEMARK OFFICE
WASHINGTON, D.C. 20231
www.uspto.gov

Paper No. 8

BAKER BOTTS L.L.P.
30 ROCKEFELLER PLAZA
NEW YORK, NY 10112-0228

COPY MAILED

SEP 28 2001

OFFICE OF PETITIONS

ON PETITION

In re Application of :
Edward Leonard et al. :
Application No. 08/986,552 :
Filed: December 8, 1997 :
Attorney Docket No. A31399-070050.0802 :

This is a decision on the petition under 37 CFR 1.137(b), filed September 5, 2001, to revive the above-identified application.

The petition is **GRANTED**.

The above-identified application became abandoned for failure to reply in a timely manner to the Notice to File Missing Parts of Application (Notice) mailed February 23, 1998. The Notice set a period for reply of two (2) months from the mail date of the Notice. No extensions of time under the provisions of 37 CFR 1.136(a) were obtained. Accordingly, the above-identified application became abandoned on April 24, 1998.

37 CFR 1.137(b)(3) requires a statement that the entire delay in filing the required reply from the due date for the reply until the filing of a grantable petition pursuant to 37 CFR 1.137(b) was unintentional. If the statement contained in the instant petition varies from the language required by 37 CFR 1.137(b)(3), the statement contained in the instant petition is being construed as the statement required by 37 CFR 1.137(b)(3) and petitioner must notify the Office if this is **not** a correct interpretation of the statement contained in the instant petition.

Telephone inquiries concerning this decision should be directed to Irvin Dingle at (703) 306-5684.

The application file is being forwarded to the Initial Patent Examination Unit.

Irvin Dingle
Petitions Examiner
Office of Petitions
Office of the Deputy Commissioner
for Patent Examination Policy

UNITED STATES
PATENT AND
TRADEMARK OFFICE

Paper 39

UNDER SECRETARY OF COMMERCE FOR INTELLECTUAL PROPERTY
AND DIRECTOR OF THE UNITED STATES PATENT AND TRADEMARK OFFICE
WASHINGTON, D.C. 20231
WWW.USPTO.GOV

JAN 24 2003

STEPHEN A BENT
FOLEY & LARDNER
3000 K STREET NW SUITE 500
PO BOX 25696
WASHINGTON DC 20007-8696

In re Application of	:
Jean-Francois Bach et al	:
Serial No.: 08/986,568	: PETITION DECISION
Filed: December 5, 1997	:
Attorney Docket No.: 040388/0110	:

This is in response to applicants' petition under 35 CFR 1.181, filed September 5, 2002, seeking to invoke the supervisory authority of the Commissioner. The petition has been referred to the attention of the Group Director.

BACKGROUND

This application has an extensive prosecution history which will not be set forth in detail herein. However, the application was forwarded to the Board of Patent Appeals and Interferences (BPAI) for review of the examiner's holding of anticipation and obviousness. In a decision mailed January 9, 2002, the BPAI maintained the anticipation holding of the examiner, albeit for different reasons than the examiner set forth and designated it as a new ground of rejection, but reversed the holding of obviousness. Applicants filed an amendment on March 8, 2002, amending claim 1 and requesting reconsideration of the rejection maintained by the BPAI. On June 11, 2002, based on applicants' decision to resume prosecution before the examiner, the examiner mailed a non-Final Office action to applicants in which, in view of the amendment to claim 1, new rejections were set forth under 35 U.S.C. 112, first paragraph, for lack of description of the invention in the specification; under 35 U.S.C. 112, first paragraph, for lack of enablement of the claimed invention; under 35 U.S.C. 103(a) over Chatenoud et al for obviousness; and under 35 U.S.C. 103(a) over Chatenoud et al in view of Gussow et al for obviousness. A three month shortened statutory period for reply was set.

Applicants replied on December 10, 2002, with an argument, but no claim amendment, to the Office action and this petition.

DISCUSSION

1.181 Petition to the Commissioner.

(a) Petition may be taken to the Commissioner:

(1) From any action or requirement of any examiner in the ex parte prosecution of an application, or in ex parte or inter partes prosecution of a reexamination proceeding which is not subject to appeal to the Board of Patent Appeals and
Interferences or to the court;

(2) In cases in which a statute or the rules specify that the matter is to be determined directly by or reviewed by the Commissioner; and

(3) To invoke the supervisory authority of the Commissioner in appropriate circumstances.

.....

(f) The mere filing of a petition will not stay any period for reply that may be running against the application, nor act as a stay of other proceedings. Any petition under this part not filed within two months of the mailing date of the action or notice from which relief is requested may be dismissed as untimely, except as otherwise provided. This two-month period is not extendable.

Inasmuch as this petition was not filed within the two month period specified in 37 CFR 1.181(f) it can be dismissed as untimely. However, the merits of the petition will also be reviewed.

Although the BPAI maintained one of the examiner's rejections upon review it did so for reasons different than those the examiner set forth. As a consequence, the BPAI designated the rejection as a new ground of rejection allowing applicants the option of requesting reconsideration before the BPAI or reopening prosecution before the examiner. Applicants chose the latter and filed within the two month period allotted an amendment of claim 1. Upon review of the amendment the examiner determined that other new grounds of rejection should now be made. The examiner set forth these new grounds of rejection in the Office action mailed June 11, 2002, which was also signed by the Group Director indicating concurrence therewith and approval of the proposed action.

Applicants complain that the prosecution was erroneously reopened following the decision by the BPAI. Applicants, however, chose the venue to proceed with the prosecution of this application - before the examiner - indicating that prosecution was to be reopened. When prosecution is reopened before the examiner following a BPAI decision, it is restricted to only the issues raised by the BPAI unless amendments have been made to the claims. Here, amendments have been made to claim 1 which allowed the examiner to consider all issues pertaining to the patentability of the claimed subject matter. This reopening was further approved by the Group Director wherein the authority lies to reopen prosecution after decision by the BPAI. Thus the examiner did not act of his own volition, but with concurrence of supervisory authority.

Applicants also complain of piecemeal prosecution. While every effort is made to present all rejections and objections to applicants as early in the prosecution as possible so that applicants may have as full and fair an opportunity of addressing them as possible, inadvertently an item may be missed due to misunderstanding or interpretation until a later Office action. This is not considered "piecemeal prosecution", but is part of the thorough review each examiner is to make prior to each Office action. Occasionally such issues arise due to amendments to the claims, although that is not necessarily the case here.

DECISION

Applicants' petition is **DISMISSED** as untimely filed, and further **DENIED** for the reasons set forth above.

The application will be forwarded to the examiner for consideration of the amendment filed December 10, 2002.

Should there be any questions with respect to this decision, please contact William R. Dixon, Jr., by mail addressed to: Director, Technology Center 1600, Washington, D.C. 20231, or by telephone at (703)308-3824 or by facsimile transmission at (703) 305-7230.

Jasemine C. Chambers

Jasemine C. Chambers
Director, Technology Center 1600

SPE RESPONSE FOR CERTIFICATE OF CORRECTION

Paper No.:200708

DATE : August 29, 2007

TO SPE OF : ART UNIT 2838

SUBJECT : Request for Certificate of Correction on Patent No.: 6,023,419

A response is requested with respect to the accompanying request for a certificate of correction.

Please complete this form and return with file, within **7** days to:
Certificates of Correction Branch - PK 3-910
Palm location **7590** - Tel. No. 305-8201

With respect to the change(s) requested, correcting Office and/or Applicant's errors, should the patent read as shown in the certificate of correction? No new matter should be introduced, nor should the scope or meaning of the claims be changed.

OK TO ENTER CHANGES TO FIG 20 + 21? EW

ERNEST C. WHITSLEE

Thank You For Your Assistance **Certificates of Correction Branch**

The request for issuing the above-identified correction(s) is hereby:
Note your decision on the appropriate box.

☒ **Approved** **All** changes apply.

☐ **Approved in Part** Specify below which changes **do not** apply.

☐ **Denied** State the reasons for denial below.

Comments:

KARL EASTHOM
SUPERVISORY PATENT EXAMINER

Karl Easthom
SPE AU 2838

/Shawn Riley/
Primary Examiner
Au2838

PTO/SB/66 (03-09)
Approved for use through 03/31/2012. OMB 0651-0016
U.S. Patent and Trademark Office: U.S. DEPARTMENT OF COMMERCE
Under the Paperwork Reduction Act of 1995, no persons are required to respond to a collection of information unless it displays valid OMB control number.

PETITION TO ACCEPT UNINTENTIONALLY DELAYED PAYMENT OF MAINTENANCE FEE IN AN EXPIRED PATENT (37 CFR 1.378(c))

Patent Number	Issue Date (YYYY-MM-DD)	Application Number	Filing Date (YYYY-MM-DD)	Docket Number (if applicable)
6652608	2003-11-25	08986891	1997-12-08	ORR IFS CIP2

CAUTION: Maintenance fee (and surcharge, if any) payment must correctly identify: (1) the patent number and (2) the application number of the actual U.S. application leading to issuance of that patent to ensure the fee(s) is/are associated with the correct patent. 37 CFR 1.366(c) and (d).

SMALL ENTITY
☒ Patentee claims, or has previously claimed, small entity status. See 37 CFR 1.27.

LOSS OF ENTITLEMENT TO SMALL ENTITY STATUS
☐ Patentee is no longer entitled to small entity status. See 37 CFR 1.27(g)

NOT Small Entity			Small Entity		
	Fee	Code		Fee	Code
○	3 ½ year	(1551)	◉	3 ½ year	(2551)
○	7 ½ year	(1552)	○	7 ½ year	(2552)
○	11 ½ year	(1553)	○	11 ½ year	(2553)

SURCHARGE
The surcharge required by 37 CFR 1.20(i)(2) (Fee Code 1558) must be paid as a condition of accepting unintentionally delayed payment of the maintenance fee.

MAINTENANCE FEE (37 CFR 1.20(e)-(g))
The appropriate maintenance fee must be submitted with this petition.

STATEMENT
THE UNDERSIGNED CERTIFIES THAT THE DELAY IN PAYMENT OF THE MAINTENANCE FEE TO THIS PATENT WAS UNINTENTIONAL

PETITIONER(S) REQUEST THAT THE DELAYED PAYMENT OF THE MAINTENANCE FEE BE ACCEPTED AND THE PATENT REINSTATED

THIS PORTION MUST BE COMPLETED BY THE SIGNATORY OR SIGNATORIES

37 CFR 1.378(d) states: "Any petition under this section must be signed by an attorney or agent registered to practice before the Patent and Trademark Office, or by the patentee, the assignee, or other party in interest."

I certify, in accordance with 37 CFR 1.4(d)(4) that I am

◉ An attorney or agent registered to practice before the Patent and Trademark Office

○ A sole patentee

○ A joint patentee; I certify that I am authorized to sign this submission on behalf of all the other patentees.

○ A joint patentee; all of whom are signing this e-petition

○ The assignee of record of the entire interest

Patent Practitioner			
A signature of the applicant or representative is required in accordance with 37 CFR 1.33 and 10.18. Please see 37 CFR 1.4(d) for the form of the signature			
Signature	/CWB/	Date (YYYY-MM-DD)	2009-09-18
Name	Carol W. BURTON	Registration Number	35465

This collection of information is required by 37 CFR 1.378(c). The information is required to obtain or retain a benefit by the public which is to file (and by the USPTO to process) an application. Confidentiality is governed by 35 U.S.C. 122 and 37 CFR 1.11 and 1.14. This collection is estimated to take 1 hour to complete, including gathering, preparing, and submitting the completed application form to the USPTO. Time will vary depending upon the individual case. Any comments on the amount of time you require to complete this form and/ or suggestions for reducing this burden, should be sent to the Chief Information Officer, U.S. Patent and Trademark Office, U.S. Department of Commerce, P.O. Box 1450, Alexandria, VA 22313-1450. DO NOT SEND FEES OR COMPLETED FORMS TO THIS ADDRESS. **This form can only be used when in conjunction with EFS-Web. If this form is mailed to the USPTO, it may cause delays in reinstating the patent.**

Privacy Act Statement

The Privacy Act of 1974 (P.L. 93-579) requires that you be given certain information in connection with your submission of the attached form related to a patent application or patent. Accordingly, pursuant to the requirements of the Act, please be advised that: (1) the general authority for the collection of this information is 35 U.S.C. 2(b)(2); (2) furnishing of the information solicited is voluntary; and (3) the principal purpose for which the information is used by the U.S. Patent and Trademark Office is to process and/or examine your submission related to a patent application or patent. If you do not furnish the requested information, the U.S. Patent and Trademark Office may not be able to process and/or examine your submission, which may result in termination of proceedings or abandonment of the application or expiration of the patent.

The information provided by you in this form will be subject to the following routine uses:

1. The information on this form will be treated confidentially to the extent allowed under the Freedom of Information Act (5 U.S.C. 552) and the Privacy Act (5 U.S.C. 552a). Records from this system of records may be disclosed to the Department of Justice to determine whether the Freedom of Information Act requires disclosure of these records.

2. A record from this system of records may be disclosed, as a routine use, in the course of presenting evidence to a court, magistrate, or administrative tribunal, including disclosures to opposing counsel in the course of settlement negotiations.

3. A record in this system of records may be disclosed, as a routine use, to a Member of Congress submitting a request involving an individual, to whom the record pertains, when the individual has requested assistance from the Member with respect to the subject matter of the record.

4. A record in this system of records may be disclosed, as a routine use, to a contractor of the Agency having need for the information in order to perform a contract. Recipients of information shall be required to comply with the requirements of the Privacy Act of 1974, as amended, pursuant to 5 U.S.C. 552a(m).

5. A record related to an International Application filed under the Patent Cooperation Treaty in this system of records may be disclosed, as a routine use, to the International Bureau of the World Intellectual Property Organization, pursuant to the Patent Cooperation Treaty.

6. A record in this system of records may be disclosed, as a routine use, to another federal agency for purposes of National Security review (35 U.S.C. 181) and for review pursuant to the Atomic Energy Act (42 U.S.C. 218(c)).

7. A record from this system of records may be disclosed, as a routine use, to the Administrator, General Services, or his/her designee, during an inspection of records conducted by GSA as part of that agency's responsibility to recommend improvements in records management practices and programs, under authority of 44 U.S.C. 2904 and 2906. Such disclosure shall be made in accordance with the GSA regulations governing inspection of records for this purpose, and any other relevant (i.e., GSA or Commerce) directive. Such disclosure shall not be used to make determinations about individuals.

8. A record from this system of records may be disclosed, as a routine use, to the public after either publication of the application pursuant to 35 U.S.C. 122(b) or issuance of a patent pursuant to 35 U.S.C. 151. Further, a record may be disclosed, subject to the limitations of 37 CFR 1.14, as a routine use, to the public if the record was filed in an application which became abandoned or in which the proceedings were terminated and which application is referenced by either a published application, an application open to public inspections or an issued patent.

9. A record from this system of records may be disclosed, as a routine use, to a Federal, State, or local law enforcement agency, if the USPTO becomes aware of a violation or potential violation of law or regulation.

UNITED STATES PATENT AND TRADEMARK OFFICE

Commissioner for Patents
United States Patent and Trademark Office
P.O. Box 1450
Alexandria, VA 22313-1450
www.uspto.gov

In re Patent No. 6652608
Issue Date: November 25,2003
Application No. 08986891
Filed: December 8,1997
Attorney Docket No. 38666.830003

:
:DECISION GRANTING PETITION
:UNDER 37 CFR 1.378(c)
:

This is a decision on the electronic petition, filed September 18,2009 ,under 37 CFR 1.378(c) to accept the unintentionally delayed payment of the 3.5 year maintenance fee for the above-identified patent.

The petition is **GRANTED**.

The maintenance fee is accepted, and the above-identified patent reinstated as of September 18,2009 . This decision also constitutes notice that the fee has been accepted. An electronic copy of the petition and this decision has been created as an entry in the Image File Wrapper. Nevertheless, petitioner should print and retain an independent copy.

Telephone inquiries related to this electronic decision should be directed to the Electronic Business Center at 1-866-217-9197.

UNITED STATES PATENT AND TRADEMARK OFFICE

UNDER SECRETARY OF COMMERCE FOR INTELLECTUAL PROPERTY AND
DIRECTOR OF THE UNITED STATES PATENT AND TRADEMARK OFFICE
WASHINGTON, D.C. 20231
www.uspto.gov

APR 10 2003

Paper No. 31

In re Application of
Matthew G. Howell
Application No. 08/987,005
Filed: December 8, 1997
Attorney Docket No. MCT.010700US
(MUEI-0336.00/US)

DECISION ON PETITION

This is a decision on the petition filed on September 30, 2002 that was recently forwarded to the undersigned by the Office of Petitions. The petition is properly considered under 37 CFR 1.181 as a petition to withdraw the holding of abandonment. No fee is required for the petition, and a refund of the $130.00 petition fee will be made in due course.

The petition is granted.

This application was held to have become abandoned for failure to file a proper reply to the Office letter dated January 2, 2002. Petitioner alleges that the application was not in fact abandoned because a timely reply to the Office letter in question, in the form of a request for filing a Continued Prosecution Application (CPA) was in fact filed. This allegation is supported by a copy of the reply, and by a copy of the filing receipt for the reply which shows that the reply was in fact received in the Office on April 2, 2002. Petitioner should note that reliance upon the included copy of an Express Mail Label would have been ineffective absent the copy of the post card (filing receipt), because the copy of the CPA as submitted with the petition does not include the Express Mail Label No. See 37 CFR 1.10 and MPEP § 513. It is also noted that Office financial records show the receipt of the $740.00 fee tendered with the CPA on April 2, 2002.

Petitioner is further advised that the filing of a CPA in this application was improper. 37 CFR 1.53(d) indicates that a CPA pursuant to that regulation cannot be filed in any application filed on or after May 29, 2000. Here, the record shows that a previous CPA was in fact filed on October 12, 2000. See MPEP § 201.06(d), in particular, page 200-43. However, Office policy is to treat an improperly filed CPA as an Request for Continued Examination (RCE) filed under 37 CFR 1.114. See MPEP §§ 201.06(d) at page 200-41 and 706.07(h). A review of the papers filed on April 2, 2002 shows that they in fact qualify as a properly filed RCE because there had been a final rejection (prosecution was closed), petitioner requested entry of the previously filed amendment after final action (a submission accompanied the filing of the RCE), and a $740.00 fee was tendered with the papers.

In view of the timely filing of an RCE, it is clearly established that this application was not in fact abandoned. Accordingly, the Notice of Abandonment is hereby vacated, the holding of abandonment is withdrawn, and the application is restored to pending status. The application is being forwarded to the Head Supervisory Applications Examiner for the following actions:

1. Refund the $130.00 petition fee.

2. Conversion of the RAM system entry for April 2, 2002 so that the $740.00 fee is shown as having been remitted for the filing of a RCE, rather than a CPA.

3. Processing of the papers entitled CPA as filed on April 2, 2002 as a properly filed RCE, for which the fee has been paid. This processing will include entry of the amendment previously filed on February 20, 2002.

4. Correct the PALM system to show the spelling of applicant's given name as Matthew (with two t's)

Thereafter, the application will be forwarded to the examiner for action on the reply filed on February 20, 2002.

PETITION GRANTED.

E. Rollins-Cross, Director, Patent
Examining Groups 3710 and 3720

Coe F. Miles
Troop, Pruner Et Al
8554 Katy Freeway
Suite 100
Houston, TX 77024

UNITED STATES PATENT AND TRADEMARK OFFICE

Commissioner for Patents
United States Patent and Trademark Office
Washington, D.C. 20231
www.uspto.gov

Paper No. 11

MAIL

FEB 21 2002

DIRECTOR OFFICE
TECHNOLOGY CENTER 2600

BORDEN LADNER GERVAIS, LLP
1000 - 60 QUEEN STREET
OTTAWA, ONTARIO K1P 5Y7
CANADA

In re application of:
Farra, et al.
Application No. 08/987,216
Filed: December 9, 1997
For: Method of Improving Conferencing In Telephony

DECISION ON PETITION

This is a decision on the Request for Withdrawal of the Holding of Abandonment filed December 17, 2001.

This application was held abandoned for failure to timely respond to the final Office action mailed July 17, 2001.

Petitioner asserts that the Office action was not received. The final Office action was mailed to the address of record at the time: John Chupa, 31313 Northwestern Highway, suite 205, Farmington Hills, MI 48334, on July 17, 2001. However, petitioner states a power of attorney and change of correspondence address was submitted on June 28, 2001. A review of the application file indicates the submission of the aforementioned power of attorney and change of correspondence which was received by the Patent and Trademark Office on June 28, 2001. Unfortunately, the power of attorney and change of correspondence address was not entered into the file and made of record until July 24, 2001. Therefore, there was an irregularity in the mailing of the final Office action on July 17, 2001, as it was mistakenly mailed to an incorrect correspondence address. The Patent and Trademark Office regrets any inconvenience to Petitioner.

Accordingly, the application was not abandoned in fact and the holding of abandonment is withdrawn.

The petition is **GRANTED.**

The file will be forwarded to the support staff for re-mailing the final Office action to the proper correspondence address of record setting a shortened statutory period of three months for applicant to respond.

James L. Dwyer, Director
Technology Center 2600
Communications

UNITED STATES PATENT AND TRADEMARK OFFICE

Commissioner for Patents
United States Patent and Trademark Office
P.O. Box 1450
Alexandria, VA 22313-1450
www.uspto.gov

In re Patent No. 5934501
Issue Date: August 10,1999
Application No. 08987293
Filed: December 9,1997
Attorney Docket No. 9696.3801

:
:DECISION GRANTING PETITION
:UNDER 37 CFR 1.378(c)
:

This is a decision on the electronic petition, filed July 14,2009 ,under 37 CFR 1.378(c) to accept the unintentionally delayed payment of the 7.5 year maintenance fee for the above-identified patent.

The petition is **GRANTED**.

The maintenance fee is accepted, and the above-identified patent reinstated as of July 14,2009 . This decision also constitutes notice that the fee has been accepted. An electronic copy of the petition and this decision has been created as an entry in the Image File Wrapper. Nevertheless, petitioner should print and retain an independent copy.

Telephone inquiries related to this electronic decision should be directed to the Electronic Business Center at 1-866-217-9197.

PTO/SB/66 (03-09)
Approved for use through 03/31/2012. OMB 0651-0016
U.S. Patent and Trademark Office: U.S. DEPARTMENT OF COMMERCE
Under the Paperwork Reduction Act of 1995, no persons are required to respond to a collection of information unless it displays valid OMB control number.

PETITION TO ACCEPT UNINTENTIONALLY DELAYED PAYMENT OF MAINTENANCE FEE IN AN EXPIRED PATENT (37 CFR 1.378(c))

Patent Number	Issue Date (YYYY-MM-DD)	Application Number	Filing Date (YYYY-MM-DD)	Docket Number (if applicable)
5934501	1999-08-10	08/987,293	1997-12-09	9696.3801

CAUTION: Maintenance fee (and surcharge, if any) payment must correctly identify: (1) the patent number and (2) the application number of the actual U.S. application leading to issuance of that patent to ensure the fee(s) is/are associated with the correct patent. 37 CFR 1.366(c) and (d).

SMALL ENTITY
☒ Patentee claims, or has previously claimed, small entity status. See 37 CFR 1.27.

LOSS OF ENTITLEMENT TO SMALL ENTITY STATUS
☐ Patentee is no longer entitled to small entity status. See 37 CFR 1.27(g)

NOT Small Entity		Small Entity	
Fee	Code	Fee	Code
○ 3 ½ year	(1551)	○ 3 ½ year	(2551)
○ 7 ½ year	(1552)	◉ 7 ½ year	(2552)
○ 11 ½ year	(1553)	○ 11 ½ year	(2553)

SURCHARGE
The surcharge required by 37 CFR 1.20(i)(2) (Fee Code 1558) must be paid as a condition of accepting unintentionally delayed payment of the maintenance fee.

MAINTENANCE FEE (37 CFR 1.20(e)-(g))
The appropriate maintenance fee must be submitted with this petition.

STATEMENT
THE UNDERSIGNED CERTIFIES THAT THE DELAY IN PAYMENT OF THE MAINTENANCE FEE TO THIS PATENT WAS UNINTENTIONAL

PETITIONER(S) REQUEST THAT THE DELAYED PAYMENT OF THE MAINTENANCE FEE BE ACCEPTED AND THE PATENT REINSTATED

THIS PORTION MUST BE COMPLETED BY THE SIGNATORY OR SIGNATORIES

37 CFR 1.378(d) states: "Any petition under this section must be signed by an attorney or agent registered to practice before the Patent and Trademark Office, or by the patentee, the assignee, or other party in interest."

I certify, in accordance with 37 CFR 1.4(d)(4) that I am

◉ An attorney or agent registered to practice before the Patent and Trademark Office

○ A sole patentee

○ A joint patentee; I certify that I am authorized to sign this submission on behalf of all the other patentees.

○ A joint patentee; all of whom are signing this e-petition

○ The assignee of record of the entire interest

Patent Practitioner			
A signature of the applicant or representative is required in accordance with 37 CFR 1.33 and 10.18. Please see 37 CFR 1.4(d) for the form of the signature			
Signature	/barry. haley/	Date (YYYY-MM-DD)	2009-07-14
Name	Barry L. Haley, Esq.	Registration Number	25339

This collection of information is required by 37 CFR 1.378(c). The information is required to obtain or retain a benefit by the public which is to file (and by the USPTO to process) an application. Confidentiality is governed by 35 U.S.C. 122 and 37 CFR 1.11 and 1.14. This collection is estimated to take 1 hour to complete, including gathering, preparing, and submitting the completed application form to the USPTO. Time will vary depending upon the individual case. Any comments on the amount of time you require to complete this form and/ or suggestions for reducing this burden, should be sent to the Chief Information Officer, U.S. Patent and Trademark Office, U.S. Department of Commerce, P.O. Box 1450, Alexandria, VA 22313-1450. DO NOT SEND FEES OR COMPLETED FORMS TO THIS ADDRESS. **This form can only be used when in conjunction with EFS-Web. If this form is mailed to the USPTO, it may cause delays in reinstating the patent.**

Privacy Act Statement

The Privacy Act of 1974 (P.L. 93-579) requires that you be given certain information in connection with your submission of the attached form related to a patent application or patent. Accordingly, pursuant to the requirements of the Act, please be advised that: (1) the general authority for the collection of this information is 35 U.S.C. 2(b)(2); (2) furnishing of the information solicited is voluntary; and (3) the principal purpose for which the information is used by the U.S. Patent and Trademark Office is to process and/or examine your submission related to a patent application or patent. If you do not furnish the requested information, the U.S. Patent and Trademark Office may not be able to process and/or examine your submission, which may result in termination of proceedings or abandonment of the application or expiration of the patent.

The information provided by you in this form will be subject to the following routine uses:

1. The information on this form will be treated confidentially to the extent allowed under the Freedom of Information Act (5 U.S.C. 552) and the Privacy Act (5 U.S.C. 552a). Records from this system of records may be disclosed to the Department of Justice to determine whether the Freedom of Information Act requires disclosure of these records.

2. A record from this system of records may be disclosed, as a routine use, in the course of presenting evidence to a court, magistrate, or administrative tribunal, including disclosures to opposing counsel in the course of settlement negotiations.

3. A record in this system of records may be disclosed, as a routine use, to a Member of Congress submitting a request involving an individual, to whom the record pertains, when the individual has requested assistance from the Member with respect to the subject matter of the record.

4. A record in this system of records may be disclosed, as a routine use, to a contractor of the Agency having need for the information in order to perform a contract. Recipients of information shall be required to comply with the requirements of the Privacy Act of 1974, as amended, pursuant to 5 U.S.C. 552a(m).

5. A record related to an International Application filed under the Patent Cooperation Treaty in this system of records may be disclosed, as a routine use, to the International Bureau of the World Intellectual Property Organization, pursuant to the Patent Cooperation Treaty.

6. A record in this system of records may be disclosed, as a routine use, to another federal agency for purposes of National Security review (35 U.S.C. 181) and for review pursuant to the Atomic Energy Act (42 U.S.C. 218(c)).

7. A record from this system of records may be disclosed, as a routine use, to the Administrator, General Services, or his/her designee, during an inspection of records conducted by GSA as part of that agency's responsibility to recommend improvements in records management practices and programs, under authority of 44 U.S.C. 2904 and 2906. Such disclosure shall be made in accordance with the GSA regulations governing inspection of records for this purpose, and any other relevant (i.e., GSA or Commerce) directive. Such disclosure shall not be used to make determinations about individuals.

8. A record from this system of records may be disclosed, as a routine use, to the public after either publication of the application pursuant to 35 U.S.C. 122(b) or issuance of a patent pursuant to 35 U.S.C. 151. Further, a record may be disclosed, subject to the limitations of 37 CFR 1.14, as a routine use, to the public if the record was filed in an application which became abandoned or in which the proceedings were terminated and which application is referenced by either a published application, an application open to public inspections or an issued patent.

9. A record from this system of records may be disclosed, as a routine use, to a Federal, State, or local law enforcement agency, if the USPTO becomes aware of a violation or potential violation of law or regulation.

UNITED STATES PATENT AND TRADEMARK OFFICE

COMMISSIONER FOR PATENTS
UNITED STATES PATENT AND TRADEMARK OFFICE
P.O. BOX 1450
ALEXANDRIA, VA 22313-1450
www.uspto.gov

Paper No. 36

NORRIS MCLAUGHLIN & MARCUS, P.A.
220 EAST 42ND STREET-30TH FLOOR
NEW YORK NY 10017

COPY MAILED

FEB 0 6 2004

OFFICE OF PETITIONS

In re Application of	:	
Gers-Barlag et al.	:	
Application No. 08/987,468	:	ON PETITION
Filed: 10 December, 1997	:	
Attorney Docket No. BEIERSDORF	:	

This is a decision on the petition under 37 CFR 1.137(b),[1] filed on 29 December, 2003, to revive the above-identified application.

The petition is **GRANTED**.

This application became abandoned on 9 July, 2003, for failure to timely respond to the non-final Office action mailed on 8 April, 2003, which set a three (3) month shortened statutory period for reply. No extensions of the time for reply in accordance with 37

---

[1]Effective December 1, 1997, the provisions of 37 CFR 1.137(b) now provide that where the delay in reply was unintentional, a petition may be filed to revive an abandoned application or a lapsed patent pursuant to 37 CFR 1.137(b). A grantable petition filed under the provisions of 37 CFR 1.137(b) must be accompanied by:

(1) the required reply, unless previously filed. In a nonprovisional application abandoned for failure to prosecute, the required reply may be met by the filing of a continuing application. In a nonprovisional application filed on or after June 8, 1995, and abandoned for failure to prosecute, the required reply may also be met by the filing of a request for continued examination in compliance with § 1.114. In an application or patent, abandoned or lapsed for failure to pay the issue fee or any portion thereof, the required reply must be the payment of the issue fee or any outstanding balance thereof. In an application abandoned for failure to pay the publication fee, the required reply must include payment of the publication fee.

(2) the petition fee as set forth in 37 CFR 1.17(m);

(3) a statement that the entire delay in filing the required reply from the due date for the reply until the filing of a grantable petition pursuant to 37 CFR 1.137(b) was unintentional. The Commissioner may required additional information where there is a question whether the delay was unintentional; and

(4) any terminal disclaimer (and fee as set forth in 37 CFR 1.20(d)) required pursuant to 37 CFR 1.137(c)).

CFR 1.136(a) were obtained. Notice of Abandonment was mailed on 28 October, 2003.

Although the petition states that the petition fee is enclosed, no check or authorization to charge the petition fee was located among the papers filed with the petition on 29 December, 2003. The petition fee of $1,330.00, however, will be charged to counsel's deposit account, No. 14-1263, as authorized in the extension of time request filed on 16 September, 2002.

The application is being forwarded to Technology Center 1600 for consideration of the amendment filed with the present petition.

Telephone inquiries concerning this matter may be directed to the undersigned at (703)308-6918.

D Wood

Douglas I. Wood
Senior Petitions Attorney
Office of Petitions

PTO/SB/66 (03-09)
Approved for use through 03/31/2012. OMB 0651-0016
U.S. Patent and Trademark Office: U.S. DEPARTMENT OF COMMERCE
Under the Paperwork Reduction Act of 1995, no persons are required to respond to a collection of information unless it displays valid OMB control number.

PETITION TO ACCEPT UNINTENTIONALLY DELAYED PAYMENT OF MAINTENANCE FEE IN AN EXPIRED PATENT (37 CFR 1.378(c))

Patent Number	Issue Date (YYYY-MM-DD)	Application Number	Filing Date (YYYY-MM-DD)	Docket Number (if applicable)
6,288,039	2001-09-11	08/987,506	1997-12-09	130761.0149

CAUTION: Maintenance fee (and surcharge, if any) payment must correctly identify: (1) the patent number and (2) the application number of the actual U.S. application leading to issuance of that patent to ensure the fee(s) is/are associated with the correct patent. 37 CFR 1.366(c) and (d).

SMALL ENTITY
☒ Patentee claims, or has previously claimed, small entity status. See 37 CFR 1.27.

LOSS OF ENTITLEMENT TO SMALL ENTITY STATUS
☐ Patentee is no longer entitled to small entity status. See 37 CFR 1.27(g)

NOT Small Entity		Small Entity	
Fee	Code	Fee	Code
○ 3 ½ year	(1551)	○ 3 ½ year	(2551)
○ 7 ½ year	(1552)	◉ 7 ½ year	(2552)
○ 11 ½ year	(1553)	○ 11 ½ year	(2553)

SURCHARGE
The surcharge required by 37 CFR 1.20(i)(2) (Fee Code 1558) must be paid as a condition of accepting unintentionally delayed payment of the maintenance fee.

MAINTENANCE FEE (37 CFR 1.20(e)-(g))
The appropriate maintenance fee must be submitted with this petition.

STATEMENT
THE UNDERSIGNED CERTIFIES THAT THE DELAY IN PAYMENT OF THE MAINTENANCE FEE TO THIS PATENT WAS UNINTENTIONAL

PETITIONER(S) REQUEST THAT THE DELAYED PAYMENT OF THE MAINTENANCE FEE BE ACCEPTED AND THE PATENT REINSTATED

THIS PORTION MUST BE COMPLETED BY THE SIGNATORY OR SIGNATORIES

37 CFR 1.378(d) states: "Any petition under this section must be signed by an attorney or agent registered to practice before the Patent and Trademark Office, or by the patentee, the assignee, or other party in interest."

I certify, in accordance with 37 CFR 1.4(d)(4) that I am

◉ An attorney or agent registered to practice before the Patent and Trademark Office

○ A sole patentee

○ A joint patentee; I certify that I am authorized to sign this submission on behalf of all the other patentees.

○ A joint patentee; all of whom are signing this e-petition

○ The assignee of record of the entire interest

Patent Practitioner			
A signature of the applicant or representative is required in accordance with 37 CFR 1.33 and 10.18. Please see 37 CFR 1.4(d) for the form of the signature			
Signature	/Peter S. Weissman/	Date (YYYY-MM-DD)	2009-11-06
Name	Peter S. Weissman	Registration Number	40220

This collection of information is required by 37 CFR 1.378(c). The information is required to obtain or retain a benefit by the public which is to file (and by the USPTO to process) an application. Confidentiality is governed by 35 U.S.C. 122 and 37 CFR 1.11 and 1.14. This collection is estimated to take 1 hour to complete, including gathering, preparing, and submitting the completed application form to the USPTO. Time will vary depending upon the individual case. Any comments on the amount of time you require to complete this form and/ or suggestions for reducing this burden, should be sent to the Chief Information Officer, U.S. Patent and Trademark Office, U.S. Department of Commerce, P.O. Box 1450, Alexandria, VA 22313-1450. DO NOT SEND FEES OR COMPLETED FORMS TO THIS ADDRESS. **This form can only be used when in conjunction with EFS-Web. If this form is mailed to the USPTO, it may cause delays in reinstating the patent.**

Privacy Act Statement

The Privacy Act of 1974 (P.L. 93-579) requires that you be given certain information in connection with your submission of the attached form related to a patent application or patent. Accordingly, pursuant to the requirements of the Act, please be advised that: (1) the general authority for the collection of this information is 35 U.S.C. 2(b)(2); (2) furnishing of the information solicited is voluntary; and (3) the principal purpose for which the information is used by the U.S. Patent and Trademark Office is to process and/or examine your submission related to a patent application or patent. If you do not furnish the requested information, the U.S. Patent and Trademark Office may not be able to process and/or examine your submission, which may result in termination of proceedings or abandonment of the application or expiration of the patent.

The information provided by you in this form will be subject to the following routine uses:

1. The information on this form will be treated confidentially to the extent allowed under the Freedom of Information Act (5 U.S.C. 552) and the Privacy Act (5 U.S.C. 552a). Records from this system of records may be disclosed to the Department of Justice to determine whether the Freedom of Information Act requires disclosure of these records.

2. A record from this system of records may be disclosed, as a routine use, in the course of presenting evidence to a court, magistrate, or administrative tribunal, including disclosures to opposing counsel in the course of settlement negotiations.

3. A record in this system of records may be disclosed, as a routine use, to a Member of Congress submitting a request involving an individual, to whom the record pertains, when the individual has requested assistance from the Member with respect to the subject matter of the record.

4. A record in this system of records may be disclosed, as a routine use, to a contractor of the Agency having need for the information in order to perform a contract. Recipients of information shall be required to comply with the requirements of the Privacy Act of 1974, as amended, pursuant to 5 U.S.C. 552a(m).

5. A record related to an International Application filed under the Patent Cooperation Treaty in this system of records may be disclosed, as a routine use, to the International Bureau of the World Intellectual Property Organization, pursuant to the Patent Cooperation Treaty.

6. A record in this system of records may be disclosed, as a routine use, to another federal agency for purposes of National Security review (35 U.S.C. 181) and for review pursuant to the Atomic Energy Act (42 U.S.C. 218(c)).

7. A record from this system of records may be disclosed, as a routine use, to the Administrator, General Services, or his/her designee, during an inspection of records conducted by GSA as part of that agency's responsibility to recommend improvements in records management practices and programs, under authority of 44 U.S.C. 2904 and 2906. Such disclosure shall be made in accordance with the GSA regulations governing inspection of records for this purpose, and any other relevant (i.e., GSA or Commerce) directive. Such disclosure shall not be used to make determinations about individuals.

8. A record from this system of records may be disclosed, as a routine use, to the public after either publication of the application pursuant to 35 U.S.C. 122(b) or issuance of a patent pursuant to 35 U.S.C. 151. Further, a record may be disclosed, subject to the limitations of 37 CFR 1.14, as a routine use, to the public if the record was filed in an application which became abandoned or in which the proceedings were terminated and which application is referenced by either a published application, an application open to public inspections or an issued patent.

9. A record from this system of records may be disclosed, as a routine use, to a Federal, State, or local law enforcement agency, if the USPTO becomes aware of a violation or potential violation of law or regulation.

UNITED STATES PATENT AND TRADEMARK OFFICE

Commissioner for Patents
United States Patent and Trademark Office
P.O. Box 1450
Alexandria, VA 22313-1450
www.uspto.gov

In re Patent No. 6288039
Issue Date: September 11,2001
Application No. 08987506
Filed: December 9,1997
Attorney Docket No. 23057-X3

:
:DECISION GRANTING PETITION
:UNDER 37 CFR 1.378(c)
:

This is a decision on the electronic petition, filed November 6,2009 ,under 37 CFR 1.378(c) to accept the unintentionally delayed payment of the 7.5 year maintenance fee for the above-identified patent.

The petition is **GRANTED**.

The maintenance fee is accepted, and the above-identified patent reinstated as of November 6,2009 . This decision also constitutes notice that the fee has been accepted. An electronic copy of the petition and this decision has been created as an entry in the Image File Wrapper. Nevertheless, petitioner should print and retain an independent copy.

Telephone inquiries related to this electronic decision should be directed to the Electronic Business Center at 1-866-217-9197.

UNITED STATES PATENT AND TRADEMARK OFFICE

Commissioner for Patents
United States Patent and Trademark Office
P.O. Box 1450
Alexandria, VA 22313-1450
www.uspto.gov

In re Patent No. 6011788
Issue Date: January 4,2000
Application No. 08987815
Filed: December 10,1997
Attorney Docket No. 528-007519-U

:
:DECISION GRANTING PETITION
:UNDER 37 CFR 1.378(c)
:

This is a decision on the electronic petition, filed January 24,2008 ,under 37 CFR 1.378(c) to accept the unintentionally delayed payment of the 7.5 year maintenance fee for the above-identified patent.

The petition is GRANTED.

The maintenance fee is accepted, and the above-identified patent reinstated as of January 24,2008 . This decision also constitutes notice that the fee has been accepted. An electronic copy of the petition and this decision has been created as an entry in an Image File Wrapper. Nevertheless, petitioner should print and retain an independent copy

Telephone inquires related to this electronic decision should be directed to the Electronic Business Center at 1-866-217-9197.

Under the Paperwork Reduction Act of 1995, no persons are required to respond to a collection of information unless it displays valid OMB control number.

PETITION TO ACCEPT UNINTENTIONALLY DELAYED PAYMENT OF MAINTENANCE FEE IN AN EXPIRED PATENT (37 CFR 1.378(c))

Patent Number	Issue Date (YYYY-MM-DD)	Application Number	Filing Date (YYYY-MM-DD)	Docket Number (if applicable)
6,011,788	2000-01-04	08/987,815	1997-12-10	528-007519-US (PAR)

CAUTION: Maintenance fee (and surcharge, if any) payment must correctly identify: (1) the patent number and (2) the application number of the actual U.S. application leading to issuance of that patent to ensure the fee(s) is/are associated with the correct patent. 37 CFR 1.366(c) and (d).

SMALL ENTITY
☐ Patentee claims, or has previously claimed, small entity status. See 37 CFR 1.27.

LOSS OF ENTITLEMENT TO SMALL ENTITY STATUS
☐ Patentee is no longer entitled to small entity status. See 37 CFR 1.27(g)

NOT Small Entity		Small Entity	
Fee	Code	Fee	Code
○ 3 ½ year	(1551)	○ 3 ½ year	(2551)
◉ 7 ½ year	(1552)	○ 7 ½ year	(2552)
○ 11 ½ year	(1553)	○ 11 ½ year	(2553)

SURCHARGE
The surcharge required by 37 CFR 1.20(i)(2) (Fee Code 1558) must be paid as a condition of accepting unintentionally delayed payment of the maintenance fee.

MAINTENANCE FEE (37 CFR 1.20(e)-(g))
The appropriate maintenance fee must be submitted with this petition.

STATEMENT
THE UNDERSIGNED CERTIFIES THAT THE DELAY IN PAYMENT OF THE MAINTENANCE FEE TO THIS PATENT WAS UNINTENTIONAL

PETITIONER(S) REQUEST THAT THE DELAYED PAYMENT OF THE MAINTENANCE FEE BE ACCEPTED AND THE PATENT REINSTATED

THIS PORTION MUST BE COMPLETED BY THE SIGNATORY OR SIGNATORIES

37 CFR 1.378(d) states: "Any petition under this section must be signed by an attorney or agent registered to practice before the Patent and Trademark Office, or by the patentee, the assignee, or other party in interest."

I certify, in accordance with 37 CFR 1.4(d)(4) that I am

◉ An attorney or agent registered to practice before the Patent and Trademark Office

○ A sole patentee

○ A joint patentee; I certify that I am authorized to sign this submission on behalf of all the other patentees.

○ A joint patentee; all of whom are signing this e-petition

○ The assignee of record of the entire interest

Patent Practitioner			
A signature of the applicant or representative is required in accordance with 37 CFR 1.33 and 10.18. Please see 37 CFR 1.4(d) for the form of the signature			
Signature	/Joseph V. Gamberdell, Jr. 44,695/	Date (YYYY-MM-DD)	2008-01-24
Name	Joseph V. Gamberdell, Jr.	Registration Number	44695

This collection of information is required by 37 CFR 1.378(c). The information is required to obtain or retain a benefit by the public which is to file (and by the USPTO to process) an application. Confidentiality is governed by 35 U.S.C. 122 and 37 CFR 1.11 and 1.14. This collection is estimated to take 1 hour to complete, including gathering, preparing, and submitting the completed application form to the USPTO. Time will vary depending upon the individual case. Any comments on the amount of time you require to complete this form and/ or suggestions for reducing this burden, should be sent to the Chief Information Officer, U.S. Patent and Trademark Office, U.S. Department of Commerce, P.O. Box 1450, Alexandria, VA 22313-1450. DO NOT SEND FEES OR COMPLETED FORMS TO THIS ADDRESS. **This form can only be used when in conjunction with EFS-Web. If this form is mailed to the USPTO, it may cause delays in reinstating the patent.**

Privacy Act Statement

The Privacy Act of 1974 (P.L. 93-579) requires that you be given certain information in connection with your submission of the attached form related to a patent application or patent. Accordingly, pursuant to the requirements of the Act, please be advised that: (1) the general authority for the collection of this information is 35 U.S.C. 2(b)(2); (2) furnishing of the information solicited is voluntary; and (3) the principal purpose for which the information is used by the U.S. Patent and Trademark Office is to process and/or examine your submission related to a patent application or patent. If you do not furnish the requested information, the U.S. Patent and Trademark Office may not be able to process and/or examine your submission, which may result in termination of proceedings or abandonment of the application or expiration of the patent.

The information provided by you in this form will be subject to the following routine uses:

1. The information on this form will be treated confidentially to the extent allowed under the Freedom of Information Act (5 U.S.C. 552) and the Privacy Act (5 U.S.C. 552a). Records from this system of records may be disclosed to the Department of Justice to determine whether the Freedom of Information Act requires disclosure of these record s.

2. A record from this system of records may be disclosed, as a routine use, in the course of presenting evidence to a court, magistrate, or administrative tribunal, including disclosures to opposing counsel in the course of settlement negotiations.

3. A record in this system of records may be disclosed, as a routine use, to a Member of Congress submitting a request involving an individual, to whom the record pertains, when the individual has requested assistance from the Member with respect to the subject matter of the record.

4. A record in this system of records may be disclosed, as a routine use, to a contractor of the Agency having need for the information in order to perform a contract. Recipients of information shall be required to comply with the requirements of the Privacy Act of 1974, as amended, pursuant to 5 U.S.C. 552a(m).

5. A record related to an International Application filed under the Patent Cooperation Treaty in this system of records may be disclosed, as a routine use, to the International Bureau of the World Intellectual Property Organization, pursuant to the Patent Cooperation Treaty.

6. A record in this system of records may be disclosed, as a routine use, to another federal agency for purposes of National Security review (35 U.S.C. 181) and for review pursuant to the Atomic Energy Act (42 U.S.C. 218(c)).

7. A record from this system of records may be disclosed, as a routine use, to the Administrator, General Services, or his/her designee, during an inspection of records conducted by GSA as part of that agency's responsibility to recommend improvements in records management practices and programs, under authority of 44 U.S.C. 2904 and 2906. Such disclosure shall be made in accordance with the GSA regulations governing inspection of records for this purpose, and any other relevant (i.e., GSA or Commerce) directive. Such disclosure shall not be used to make determinations about individuals.

8. A record from this system of records may be disclosed, as a routine use, to the public after either publication of the application pursuant to 35 U.S.C. 122(b) or issuance of a patent pursuant to 35 U.S.C. 151. Further, a record may be disclosed, subject to the limitations of 37 CFR 1.14, as a routine use, to the public if the record was filed in an application which became abandoned or in which the proceedings were terminated and which application is referenced by either a published application, an application open to public inspections or an issued patent.

9. A record from this system of records may be disclosed, as a routine use, to a Federal, State, or local law enforcement agency, if the USPTO becomes aware of a violation or potential violation of law or regulation.

UNITED STATES PATENT AND TRADEMARK OFFICE

Commissioner for Patents
United States Patent and Trademark Office
Washington, D.C. 20231
www.uspto.gov

Paper No. 9

David J. O'Neill
WorldCom, Inc.
Technology Law Department
1133 19th Street, N.W.
Washington, DC 20036

MAIL

JUL 01 2002

DIRECTOR OFFICE
TECHNOLOGY CENTER 2100

In re Application of: John McLain, Jr. et al.	)	
Application No.: 08/987,849	)	
Filed: December 9, 1997	)	**DECISION ON PETITION UNDER 37**
For: SYSTEM AND METHOD FOR	)	**C.F.R. § 1.181 TO WITHDRAW**
MANAGING COMPUTER SYSTEM	)	**HOLDING OF ABANDONMENT**
RESOURCES USING COMMAND	)	
CONTROL VECTORS	)	

This is a decision on the petition filed February 4, 2002, as supplemented by the paper filed May 2, 2002, under 37 CFR § 1.181 to a withdraw the holding of abandonment of the above-identified application.

This application was held abandoned for failure to respond in a timely manner to the Office Action (restriction requirement) mailed March 27, 2001 (Paper No. 5). A Notice of Abandonment was mailed December 19, 2001 (Paper No. 6).

To prove the nonreceipt of the Office action, the petitioners were to provide the following:

1) a statement from practitioner that the Office action was not received by the practitioner,
2) a statement from practitioner that the file jacket and docket records were searched
3) a copy of the docket record where the non-received Office action would have been entered had it been received and docketed,
4) a reference to the docket record in the practitioner's statement.

Petitioners have provided all the necessary statements and submissions for this application as evidence that the Office action mailed March 27, 2001 was not received at the address of record and to overcome the presumption of receipt.

The petition is **GRANTED**. The Notice of Abandonment is withdrawn.

The office regrets any inconvenience caused by the mailing of the Notice of Abandonment.

The application file is being forwarded to the Technology Center support staff for remailing of the restriction requirement. The file will then be forwarded to the Technology Center central files to await

response by the Applicant.

Allen MacDonald

Allen R. MacDonald, Group Director
Technology Center 2100
Computer Architecture, Software, and Electronic Commerce

UNITED STATES DEPARTMENT OF COMMERCE
Patent and Trademark Office
ASSISTANT SECRETARY AND COMMISSIONER OF PATENTS AND TRADEMARKS
Washington, D.C. 20231

Paper No. 17

LERNER AND GREENBERG
P O BOX 2480
HOLLYWOOD , FL 33022-2480

Mailed

MAY 4 2000

Director's Office
Group 2700

In re Application of:
Michael Becker
Application No.: 08/987,889
Filed: December 10, 1997
For: SOUND SYSTEM FOR A MOTOR VEHICLE AND METHOD FOR DEFINING A FUNCTIONAL SCOPE OF A SOUND SYSTEM

DECISION ON PETITION TO WITHDRAW HOLDING OF ABANDONMENT

This is in response to the letter filed by facsimile on April 7, 1999, which is treated as a petition to withdraw the holding of abandonment of the above-identified application.

This application was held abandoned for failure to respond in a timely manner to the final Office action mailed April 21, 1999. A Notice of Abandonment was mailed February 1, 2000.

Petitioner asserts that a proper response was timely filed. In support of the petition, petitioner submits a copy of date stamped post card receipt acknowledging receipt of a Notice of Appeal, mailing certificate, and a check in the amount of $410.00 in the Patent and Trademark Office on August 27, 1999. However, a copy of the items listed on the post card receipt have not been provided.

The original response is not of record in the file and cannot be located. M.P.E.P. § 503 states, "[a] post card receipt which itemizes and properly identifies the papers which are being filed serves as *prima facie* evidence of receipt in the PTO of all items listed thereon on the date stamped thereon by the PTO". Accordingly, it is concluded that the Notice of Appeal and Extension request were received in the PTO but not matched with the application file.

The date stamped on post card of August 27, 1999, is after the expiration of the time period set for response with a proper petition for 2 months extension of time as requested. However, under 37 C.F.R. 1.8(a)(1) correspondence is considered timely if: (1) the correspondence is mailed or transmitted prior to expiration of the set period for response by being properly addressed to the Patent and Trademark Office as set out in 37 C.F.R. § 1.1(a) and deposited with the U.S. Postal

Service with sufficient postage as first class mail or transmitted to the Patent and Trademark Office in accordance with 37 C.F.R. § 1.6(d); and (2) the correspondence includes a certificate for each piece of correspondence stating the date of deposit or transmission. The person signing the certificate should have reasonable basis to expect that the correspondence would be mailed or transmitted on or before the date indicated.

The Notice of Appeal which includes a request and authorization to charge the fee for a one month extension of time bears a proper certificate of mailing dated August 23, 1999, and is considered as timely filed in accordance with 37 U.S.C. 21, and 37 C.F.R. 1.7 since the response would have been due August 21, 1999 which was a Saturday and the petition was filed on the next succeeding business day, Monday, August 23, 1999.

For the reasons stated above, the Notice of Abandonment is hereby vacated and the holding of abandonment withdrawn.

The petition is **GRANTED**.

The application file is being forwarded to the Technology Center's technical support staff for entry of the Notice of Appeal. The CPA request, Petition for Extension of time and fee, Preliminary Amendment and Associate Power of Attorney filed January 27, 2000 are hereby acknowledged.

James L. Dwyer, Acting Director
Technology Center 2700
Communications & Information Processing

UNITED STATES PATENT AND TRADEMARK OFFICE

COMMISSIONER FOR PATENTS
UNITED STATES PATENT AND TRADEMARK OFFICE
P.O. BOX 1450
ALEXANDRIA, VA 22313-1450
www.uspto.gov

MAIL Paper 21

APR 2 0 2004

DIRECTOR OFFICE
TECHNOLOGY CENTER 2600

PERMAN & GREEN
425 POST ROAD
FAIRFIELD CT 06430-6232

In re Application of:
CANORA et al.
Application No. 08/987,995
Filed: December 10, 1997
For: PORTABLE ELECTRONIC APPARATUS

DECISION ON PETITION

This is a decision on the petition pursuant to 37 CFR 1.181 filed January 23, 2004 which requests a review of the validity of the Examiner's action in reopening prosecution following the Decision of the Board of Patent Appeals and Interferences of March 31, 2003.

On March 31, 2003, the Board of Patent Appeals and Interferences rendered a decision, reversing the Examiner with respect to the rejection of all pending claims (paper No. 18). On November 20, 2003, the Examiner mailed out a new non-final Office action (paper No. 19), thus reopening prosecution.

Petitioner states that the examiner did not advance any supporting authority for the reopening of prosecution and requests that the outstanding Office action mailed November 20, 2003 (paper No. 19) be withdrawn and purged from the record.

> 37 CFR § 1.198 states:
> Cases which have been decided by the Board of Patent Appeals and Interferences will not be reopened or reconsidered by the primary examiner <u>except under the provisions of § 1.114 or § 1.196 without the written authority of the Commissioner</u> (emphasis added), and then only for the consideration of matters not already adjudicated, sufficient cause being shown.[49 FR 48416, Dec. 12, 1984, effective date Feb. 11, 1985; revised, 65 FR 14865,Mar. 20, 2000, effective May 29, 2000 (adopted as final, 65 FR 50092, Aug. 16, 2000)]

A review of the application reveals that the Office action mailed November 20, 2003 in fact was not signed by appropriate authority. Therefore, the petition to invoke the supervisory authority of the Commissioner under 37 CFR §1.181 and vacate the outstanding Office action is **<u>Granted</u>**.

The Office action mailed November 20, 2003 is hereby vacated. However, the Office action will not be purged from the record. Attached to this decision is a non-final Office action that contains the appropriate signature by the Technology Center (TC) Director in accordance with MPEP §1214.04.

Allen MacDonald, Director
Technology Center 2600
Communications

Attachment: non-final Office action

UNITED STATES PATENT AND TRADEMARK OFFICE

Commissioner for Patents
United States Patent and Trademark Office
P.O. Box 1450
Alexandria, VA 22313-1450
www.uspto.gov

MAIL

SEP 2 2 2005

DIRECTOR OFFICE
TECHNOLOGY CENTER 2600

PERMAN & GREEN
425 POST ROAD
FAIRFIELD CT 06430-6232

In re Application of:
James Nicholas Seymour
Application Serial No.: 08/987,995
Filed: December 10, 1997
For: **PORTABLE ELECTRONIC APPARATUS**

DECISION ON PETITION

This is a decision on the petitions, pursuant to 37 C.F.R. §1.181 filed May 12, 2004 and May 20, 2004 which requests a review of the validity of the Examiner's action in reopening prosecution following the Decision of the Board of Patent Appeals and Interferences of March 31, 2003.

On March 31, 2003, the Board of Patent Appeals and Interferences rendered a decision, reversing the Examiner with respect to the rejection of all pending claims (paper No. 18). On November 20, 2003, the Examiner mailed out a new non-final Office action (paper No. 19), thus reopening prosecution. An earlier petition regarding the appropriateness of the Office action given the apparent lack of authority for reopening prosecution, was filed on January 23, 2004. A petition decision was mailed on April 20, 2004 which granted the earlier petition and vacated the original Office action given the apparent lack of authority to reopen.

A review of the application reveals that a new non-final Office action was mailed on May 4, 2004.

37 CFR § 1.198 Reopening after decision, states:

> Cases which have been decided by the Board of Patent Appeals and Interferences will not be reopened or reconsidered by the primary examiner except under the provisions of § 1.114 or § 1.196 <u>without the written authority of the Director, and then only for the consideration of matters not already adjudicated, sufficient cause being shown</u>. [49 FR 48416, Dec. 12, 1984, effective date Feb. 11, 1985; revised, 65 FR 14865, Mar. 20, 2000, effective May 29, 2000 (adopted as final, 65 FR 50092, Aug. 16, 2000); revised, 68 FR 14332, Mar. 25, 2003, effective May 1, 2003] [emphasis added]

MPEP §1214.04 Examiner Reversed, states in part:...

> If the examiner has specific knowledge of the existence of a particular reference or references which indicate nonpatentability of any of the appealed claims as to which the examiner was reversed, he or she should submit the matter to the Technology Center (TC) Director for authorization to reopen prosecution under 37 CFR 1.198 for the purpose of entering the new rejection. See MPEP § 1002.02(c) and MPEP § 1214.07. <u>The TC Director's approval is placed on the action reopening prosecution</u>. [emphasis added]

A review of the new non-final Office action mailed May 4, 2004 reveals that the action was in fact signed by the TC Director and thus sufficient cause was demonstrated and reopening of prosecution approved by the appropriate authority.

Petitioner further commented that "..the Board makes it quite clear that Saji cannot be used to satisfy the burden of showing obviousness of Applicant's invention for purposes of 35 U.S.C. §103(a)".

In response to petitioner's comments, the Board's decision was rendered with respect to the combination of Saji in view of French. Saji taught a cordless telephone and French a laptop or notebook computer that deals with the problem of theft and that there was no suggestion found for providing an anti-theft mechanism for Saji's cordless telephone. This does not suggest that the Saji reference is otherwise an appropriate reference, particularly if combined with a relevant secondary teaching.

Accordingly, given that the Office action mailed May 4, 2004 did in fact contain the appropriate authorization, i.e., signed by the Technology Center Director, then petitioner's request to withdraw the Office action and purge from the file, **Denied**.

Andy Faile, Director
Technology Center 2600
Communications

UNITED STATES PATENT AND TRADEMARK OFFICE

COMMISSIONER FOR PATENTS
UNITED STATES PATENT AND TRADEMARK OFFICE
P.O. BOX 1450
ALEXANDRIA, VA 22313-1450
www.uspto.gov

Paper No. 21

LERNER, DAVID, LITTENBERG,
KRUMHOLZ & MENTLIK
600 SOUTH AVENUE WEST
WESTFIELD NJ 07090

COPY MAILED

NOV 04 2004

OFFICE OF PETITIONS

In re Application of:	:	
Finn and Sherman	:	DECISION ON PETITION
Application No. 08/988,331	:	UNDER 37 CFR 1.183
Filed: December 11, 1997	:	
Atty. Docket No. 1968-REISSUE	:	

This is a decision on the petition under 37 CFR 1.47(a), filed on July 14, 2003, which is being treated as a petition under 37 CFR 1.183 seeking waiver of the rule (presumably § 1.172) that requires that the inventor to sign any supplemental declaration in a broadening reissue application.

The petition is granted.

BACKGROUND

On December 11, 1997, the present application was filed as an application for reissue of U.S. Patent No. 5,454,511, by inventors Charles A. Finn and Scott Sherman, who executed an original reissue declaration.

During the prosecution of the present application, the Office required a supplemental declaration directed to errors in the original patent which were corrected in the present reissue application after the signing of the original reissue declaration.

According to the declarations supplied by the Scott S. Servilla and Geoffrey Trigger, together with the present petition, inventor Scott Sherman could not be located to sign the supplemental declaration after diligent effort to find him.

DECISION

35 U.S.C. 251, which is directed to reissue, does not address the signature requirements of a declaration in reissue. 37 CFR 1.172 requires that a reissue declaration be made (and signed) by the inventors, except as otherwise provided (§§ 1.42, 1.43, 1.47), where the scope of the claims of the original patent is being enlarged. 37 CFR 1.175(b)(1), requires that:

> "For any error corrected, which is not covered by the oath or declaration submitted under paragraph (a) of this section, applicant must submit a supplemental oath or declaration stating that every such error arose without any deceptive intention on the part of the applicant."

37 CFR 1.175(b)(1), taken in conjunction with 37 CFR 1.172, requires a supplemental declaration to be signed by the inventor. This is because all oaths or declarations necessary to fulfill the rule requirements in a reissue application are taken together collectively as a single oath or declaration. Thus, each oath and/or declaration must bear the appropriate signature of the inventor. *See In re Hayes*, 53 USPQ2d 1222 (Comm'r Pat. 1999).

37 CFR 1.183 permits, in an extraordinary situation, waiver of a rule which is not a requirement of the statute, where justice requires such waiver, and applicant has requested a waiver of the requirement that the 37 CFR 1.175(b)(1) supplemental declaration be signed by an inventor.

The instant petition is accompanied by an appropriate showing that inventor Sherman could not be located after diligent effort. Accordingly, the supplemental declaration of July 14, 2003, signed by inventor Charles A. Finn will be accepted as though it was signed by joint inventors Finn and Sherman as required by 37 CFR 1.175(b)(1) taken in conjunction with 37 CFR 1.172.

The $130.00 petition fee will be charged to Deposit Account No. 12-1095, as authorized.

CONCLUSION

The present petition to waive 37 CFR § 1.172 is granted.

The application is being forwarded to Technology Center 3700 for further prosecution.

Please direct any questions related to this decision to Christina Tartera Donnell, Petitions Attorney, at (571) 272-3211.

Kenneth M. Schor
Senior Legal Advisor
Office of Patent Legal Administration

C:\Kiva|Kenpet5\08988331_183_inventor_unavailable_grt.wpd
11-2-04

UNITED STATES PATENT AND TRADEMARK OFFICE

COMMISSIONER FOR PATENTS
UNITED STATES PATENT AND TRADEMARK OFFICE
P.O. BOX 1450
ALEXANDRIA, VA 22313-1450
www.uspto.gov

MAILED

Paper No. 39

DEC 03 2004

DIRECTOR'S OFFICE
TECHNOLOGY CENTER 2600

BURNS DOANE SWECKER & MATHIS
P. O. BOX 1404
ALEXANDRIA VA 22313-1404

In re Application of
Kenji Ishibashi, et al.
Application No. 08/988,537
Filed: December 10, 1997
For: **IMAGE OBSERVATION APPARATUS**

DECISION ON PETITION
TO WITHDRAW HOLDING OF
ABANDONMENT

This is in response to the Petition to Withdraw the Holding of Abandonment filed August 31, 2004, which is treated as pursuant to 37 CFR §1.181. No fee is required.

The application is held as abandoned for failure to timely pay the issue fee in response to the Notice of Allowance and Issue Fee Due mailed March 12, 2004. A Notice of Abandonment has not yet been mailed.

Petitioner states that they have not received any communication from the Office subsequent to the Decision on Appeal mailed January 13, 2004.

In the absence of any irregularity in the mailing of an Office action, there is a strong presumption that the Office action was properly mailed to practitioner at the address of record. This presumption may be overcome by a showing that the Office action was not in fact received. The showing required to establish the failure to receive an Office communication must include a statement from the practitioner stating that the Office communication was not received by the practitioner and attesting to the fact that a search of the file jacket and docket records indicates that the Office communication was not received. A copy of the docket record where the non-received Office communication would have been entered had it been received and docketed must be attached to and referenced in practitioner's statement. See "Withdrawing the Holding of Abandonment When Office Actions Are Not Received" 1156 Official Gazette 53 (November 16, 1993) and M.P.E.P. § 711.03(c). The showing outlined above may not be sufficient if there are circumstances that point to a conclusion that the Office communication may have been lost after receipt rather than a conclusion that the Office communication was lost in the mail.

Petitioner has complied with the requirements set forth above. However, a review of the record indicates that the Notice of Allowance was returned to the Office. The correspondence address on the Notice of Allowance mailed on March 1, 2004 matches the address in the subject petition. Thus, there was obviously an irregularity in mailing of the Notice of Allowance and Issue Fee Due.

Accordingly, the application was not abandoned in fact, and the holding of abandonment is withdrawn. The Notice of Allowance originally mailed March 12, 2004 is vacated.

The petition is **GRANTED**.

Since it is has been established that the Notice of Allowance was not received, it is presumed that the Notice of Allowability was also not received.

The application file is being forwarded to the Technology Center's technical support staff for preparing a new Notice of Allowance and Issue Fee Due. The new Notice of Allowance and Issue Fee Due as well as Notice of Allowability will be re-mailed setting a new three month statutory period for payment of the issue fee.

Dwayne Bost
Special Program Examiner
Technology Center 2600
Communications

UNITED STATES PATENT AND TRADEMARK OFFICE

COMMISSIONER FOR PATENTS
UNITED STATES PATENT AND TRADEMARK OFFICE
P.O. BOX 1450
ALEXANDRIA, VA 22313-1450
www.uspto.gov

LAW DEPARTMENT
ATTN:PATENT ADMINISTRATOR
2790 COLUMBUS ROAD,BUILDING 54,
GRANVILLE, OH 43023

COPY MAILED
MAY 12 2006
OFFICE OF PETITIONS

In re Application of		
Robert L. Sadinski	:	
Application No. 08/988,814	:	
Filed: December 11, 1997	:	NOTICE
Patent No.: 5,933,702	:	
Issued: August 3, 1999	:	
Title of Invention:	:	
PHOTOCATALYTIC AIR DISINFECTION	:	

This is a notice regarding your request to change your entity status to large.

Office records reveal that there is no assignee of the above-identified application.

In accordance with 37 CFR 1.27(g), said notice is hereby accepted. Office records have been corrected to indicate loss of small entity status in the above-identified application.

A review of the petition reveals that the address appearing on the petition differs from the correspondence address of record. Applicant is advised that, in patented files: requests for changes of correspondence address, powers of attorney, revocations of powers of attorney, withdrawal of attorney and submissions under 37 CFR 1.501: Designation of, or changes to, a fee address, should be addressed to Mail Stop M Correspondence.

The file is being referred to the files repository.

Telephone inquiries concerning this matter should be directed to the undersigned at (571) 272-3232.

Derek L. Woods
Petitions Attorney
Office of Petitions

Cc: LERNER, DAVID, LITTENBERG
KRUMHOLZ AND MENTLIK LLP
600 SOUTH AVENUE WEST
WESTFIELD, NJ 07090

UNITED STATES PATENT AND TRADEMARK OFFICE

Commissioner for Patents
United States Patent and Trademark Office
P.O. Box 1450
Alexandria, VA 22313-1450
www.uspto.gov

In re Patent No. 6049573
Issue Date: April 11,2000
Application No. 08989219
Filed: December 11,1997
Attorney Docket No. MIT7697L

:
:DECISION GRANTING PETITION
:UNDER 37 CFR 1.378(c)
:

This is a decision on the electronic petition, filed June 12,2008 ,under 37 CFR 1.378(c) to accept the unintentionally delayed payment of the 7.5 year maintenance fee for the above-identified patent.

The petition is GRANTED.

The maintenance fee is accepted, and the above-identified patent reinstated as of June 12,2008 . This decision also constitutes notice that the fee has been accepted. An electronic copy of the petition and this decision has been created as an entry in an Image File Wrapper. Nevertheless, petitioner should print and retain an independent copy

Telephone inquires related to this electronic decision should be directed to the Electronic Business Center at 1-866-217-9197.

Under the Paperwork Reduction Act of 1995, no persons are required to respond to a collection of information unless it displays valid OMB control number.

PETITION TO ACCEPT UNINTENTIONALLY DELAYED PAYMENT OF MAINTENANCE FEE IN AN EXPIRED PATENT (37 CFR 1.378(c))

Patent Number	Issue Date (YYYY-MM-DD)	Application Number	Filing Date (YYYY-MM-DD)	Docket Number (if applicable)
6049573	2000-04-11	08989219	1997-12-11	MIT.7697L

CAUTION: Maintenance fee (and surcharge, if any) payment must correctly identify: (1) the patent number and (2) the application number of the actual U.S. application leading to issuance of that patent to ensure the fee(s) is/are associated with the correct patent. 37 CFR 1.366(c) and (d).

SMALL ENTITY
☒ Patentee claims, or has previously claimed, small entity status. See 37 CFR 1.27.

LOSS OF ENTITLEMENT TO SMALL ENTITY STATUS
☐ Patentee is no longer entitled to small entity status. See 37 CFR 1.27(g)

NOT Small Entity		Small Entity	
Fee	Code	Fee	Code
○ 3 ½ year	(1551)	○ 3 ½ year	(2551)
○ 7 ½ year	(1552)	◉ 7 ½ year	(2552)
○ 11 ½ year	(1553)	○ 11 ½ year	(2553)

SURCHARGE
The surcharge required by 37 CFR 1.20(i)(2) (Fee Code 1558) must be paid as a condition of accepting unintentionally delayed payment of the maintenance fee.

MAINTENANCE FEE (37 CFR 1.20(e)-(g))
The appropriate maintenance fee must be submitted with this petition.

STATEMENT
THE UNDERSIGNED CERTIFIES THAT THE DELAY IN PAYMENT OF THE MAINTENANCE FEE TO THIS PATENT WAS UNINTENTIONAL

PETITIONER(S) REQUEST THAT THE DELAYED PAYMENT OF THE MAINTENANCE FEE BE ACCEPTED AND THE PATENT REINSTATED

THIS PORTION MUST BE COMPLETED BY THE SIGNATORY OR SIGNATORIES

37 CFR 1.378(d) states: "Any petition under this section must be signed by an attorney or agent registered to practice before the Patent and Trademark Office, or by the patentee, the assignee, or other party in interest."

I certify, in accordance with 37 CFR 1.4(d)(4) that I am

◉ An attorney or agent registered to practice before the Patent and Trademark Office

○ A sole patentee

○ A joint patentee; I certify that I am authorized to sign this submission on behalf of all the other patentees.

○ A joint patentee; all of whom are signing this e-petition

○ The assignee of record of the entire interest

Patent Practitioner			
A signature of the applicant or representative is required in accordance with 37 CFR 1.33 and 10.18. Please see 37 CFR 1.4(d) for the form of the signature			
Signature	/Matthew E. Connors/	Date (YYYY-MM-DD)	2008-06-12
Name	Matthew E. Connors	Registration Number	33298

This collection of information is required by 37 CFR 1.378(c). The information is required to obtain or retain a benefit by the public which is to file (and by the USPTO to process) an application. Confidentiality is governed by 35 U.S.C. 122 and 37 CFR 1.11 and 1.14. This collection is estimated to take 1 hour to complete, including gathering, preparing, and submitting the completed application form to the USPTO. Time will vary depending upon the individual case. Any comments on the amount of time you require to complete this form and/ or suggestions for reducing this burden, should be sent to the Chief Information Officer, U.S. Patent and Trademark Office, U.S. Department of Commerce, P.O. Box 1450, Alexandria, VA 22313-1450. DO NOT SEND FEES OR COMPLETED FORMS TO THIS ADDRESS. **This form can only be used when in conjunction with EFS-Web. If this form is mailed to the USPTO, it may cause delays in reinstating the patent.**

Privacy Act Statement

The Privacy Act of 1974 (P.L. 93-579) requires that you be given certain information in connection with your submission of the attached form related to a patent application or patent. Accordingly, pursuant to the requirements of the Act, please be advised that: (1) the general authority for the collection of this information is 35 U.S.C. 2(b)(2); (2) furnishing of the information solicited is voluntary; and (3) the principal purpose for which the information is used by the U.S. Patent and Trademark Office is to process and/or examine your submission related to a patent application or patent. If you do not furnish the requested information, the U.S. Patent and Trademark Office may not be able to process and/or examine your submission, which may result in termination of proceedings or abandonment of the application or expiration of the patent.

The information provided by you in this form will be subject to the following routine uses:

1. The information on this form will be treated confidentially to the extent allowed under the Freedom of Information Act (5 U.S.C. 552) and the Privacy Act (5 U.S.C. 552a). Records from this system of records may be disclosed to the Department of Justice to determine whether the Freedom of Information Act requires disclosure of these record s.

2. A record from this system of records may be disclosed, as a routine use, in the course of presenting evidence to a court, magistrate, or administrative tribunal, including disclosures to opposing counsel in the course of settlement negotiations.

3. A record in this system of records may be disclosed, as a routine use, to a Member of Congress submitting a request involving an individual, to whom the record pertains, when the individual has requested assistance from the Member with respect to the subject matter of the record.

4. A record in this system of records may be disclosed, as a routine use, to a contractor of the Agency having need for the information in order to perform a contract. Recipients of information shall be required to comply with the requirements of the Privacy Act of 1974, as amended, pursuant to 5 U.S.C. 552a(m).

5. A record related to an International Application filed under the Patent Cooperation Treaty in this system of records may be disclosed, as a routine use, to the International Bureau of the World Intellectual Property Organization, pursuant to the Patent Cooperation Treaty.

6. A record in this system of records may be disclosed, as a routine use, to another federal agency for purposes of National Security review (35 U.S.C. 181) and for review pursuant to the Atomic Energy Act (42 U.S.C. 218(c)).

7. A record from this system of records may be disclosed, as a routine use, to the Administrator, General Services, or his/her designee, during an inspection of records conducted by GSA as part of that agency's responsibility to recommend improvements in records management practices and programs, under authority of 44 U.S.C. 2904 and 2906. Such disclosure shall be made in accordance with the GSA regulations governing inspection of records for this purpose, and any other relevant (i.e., GSA or Commerce) directive. Such disclosure shall not be used to make determinations about individuals.

8. A record from this system of records may be disclosed, as a routine use, to the public after either publication of the application pursuant to 35 U.S.C. 122(b) or issuance of a patent pursuant to 35 U.S.C. 151. Further, a record may be disclosed, subject to the limitations of 37 CFR 1.14, as a routine use, to the public if the record was filed in an application which became abandoned or in which the proceedings were terminated and which application is referenced by either a published application, an application open to public inspections or an issued patent.

9. A record from this system of records may be disclosed, as a routine use, to a Federal, State, or local law enforcement agency, if the USPTO becomes aware of a violation or potential violation of law or regulation.

UNITED STATES DEPARTMENT OF COMMERCE
Patent and Trademark Office
ASSISTANT SECRETARY AND COMMISSIONER OF PATENTS AND TRADEMARKS
Washington, D.C. 20231

Paper No. 22

William W. Enders, Esq.
O'Keefe, Egan & Peterman, LLP
1101 S. Capital of Texas Highway
Building C, Suite 200
Austin, TX 78746

COPY MAILED

FEB 25 2000

SPECIAL PROGRAMS OFFICE
DAC FOR PATENTS

In re Application of :
Virgilio Boncan, et al :
Application No. 08/989,480 :
Filed: December 12, 1997 :
Attorney Docket No. BJSC:232 :

ON PETITION

This is a decision on the petition to withdraw the above-identified application from issue pursuant to the provisions of 37 CFR 1.313(b)(5), filed February 23, 2000.

The petition is granted.

Petitioner requests that the application be withdrawn from issue to permit abandonment for consideration of an Information Disclosure Statement in a continued prosecution application filed of even date.

The application is withdrawn from issue.

Petitioner is advised that the issue fee paid on December 21, 1999, in the parent application is not refundable nor can it be applied towards any new Notice of Allowance which may issue on the CPA filed February 23, 2000.

The application will be forwarded to Technology Center 3600 for processing the CPA.

Telephone inquiries concerning this matter may be directed to the undersigned at (703) 305-9282.

Sherry D. Brinkley
Petitions Examiner
Office of Petitions
Office of the Deputy Assistant Commissioner
for Patent Policy and Projects

UNITED STATES PATENT AND TRADEMARK OFFICE

Commissioner for Patents
United States Patent and Trademark Office
P.O. Box 1450
Alexandria, VA 22313-1450
www.uspto.gov

In re Patent No. 5934616
Issue Date: August 10,1999
Application No. 08989505
Filed: December 12,1997
Attorney Docket No. 3492

:
:DECISION GRANTING PETITION
:UNDER 37 CFR 1.378(c)
:

This is a decision on the electronic petition, filed October 19,2007 ,under 37 CFR 1.378(c) to accept the unintentionally delayed payment of the 7.5 year maintenance fee for the above-identified patent.

The petition is GRANTED.

The maintenance fee is accepted, and the above-identified patent reinstated as of October 19,2007 . This decision also constitutes notice that the fee has been accepted. An electronic copy of the petition and this decision has been created as an entry in an Image File Wrapper. Nevertheless, petitioner should print and retain an independent copy

Telephone inquires related to this electronic decision should be directed to the Electronic Business Center at 1-866-217-9197.

Under the Paperwork Reduction Act of 1995, no persons are required to respond to a collection of information unless it displays valid OMB control number.

PETITION TO ACCEPT UNINTENTIONALLY DELAYED PAYMENT OF MAINTENANCE FEE IN AN EXPIRED PATENT (37 CFR 1.378(c))

Patent Number	Issue Date (YYYY-MM-DD)	Application Number	Filing Date (YYYY-MM-DD)	Docket Number (if applicable)
5934616	1999-08-10	08989505	1997-12-12	3492

CAUTION: Maintenance fee (and surcharge, if any) payment must correctly identify: (1) the patent number and (2) the application number of the actual U.S. application leading to issuance of that patent to ensure the fee(s) is/are associated with the correct patent. 37 CFR 1.366(c) and (d).

SMALL ENTITY
☐ Patentee claims, or has previously claimed, small entity status. See 37 CFR 1.27.

LOSS OF ENTITLEMENT TO SMALL ENTITY STATUS
☐ Patentee is no longer entitled to small entity status. See 37 CFR 1.27(g)

NOT Small Entity		Small Entity	
Fee	Code	Fee	Code
○ 3 ½ year	(1551)	○ 3 ½ year	(2551)
◉ 7 ½ year	(1552)	○ 7 ½ year	(2552)
○ 11 ½ year	(1553)	○ 11 ½ year	(2553)

SURCHARGE
The surcharge required by 37 CFR 1.20(i)(2) (Fee Code 1558) must be paid as a condition of accepting unintentionally delayed payment of the maintenance fee.

MAINTENANCE FEE (37 CFR 1.20(e)-(g))
The appropriate maintenance fee must be submitted with this petition.

STATEMENT
THE UNDERSIGNED CERTIFIES THAT THE DELAY IN PAYMENT OF THE MAINTENANCE FEE TO THIS PATENT WAS UNINTENTIONAL

PETITIONER(S) REQUEST THAT THE DELAYED PAYMENT OF THE MAINTENANCE FEE BE ACCEPTED AND THE PATENT REINSTATED

THIS PORTION MUST BE COMPLETED BY THE SIGNATORY OR SIGNATORIES

37 CFR 1.378(d) states: "Any petition under this section must be signed by an attorney or agent registered to practice before the Patent and Trademark Office, or by the patentee, the assignee, or other party in interest."

I certify, in accordance with 37 CFR 1.4(d)(4) that I am

◉ An attorney or agent registered to practice before the Patent and Trademark Office

○ A sole patentee

○ A joint patentee; I certify that I am authorized to sign this submission on behalf of all the other patentees.

○ A joint patentee; all of whom are signing this e-petition

○ The assignee of record of the entire interest

Patent Practitioner			
A signature of the applicant or representative is required in accordance with 37 CFR 1.33 and 10.18. Please see 37 CFR 1.4(d) for the form of the signature			
Signature	/Walter F. Fasse #36132/	Date (YYYY-MM-DD)	2007-10-19
Name	Walter F. Fasse	Registration Number	36132

This collection of information is required by 37 CFR 1.378(c). The information is required to obtain or retain a benefit by the public which is to file (and by the USPTO to process) an application. Confidentiality is governed by 35 U.S.C. 122 and 37 CFR 1.11 and 1.14. This collection is estimated to take 1 hour to complete, including gathering, preparing, and submitting the completed application form to the USPTO. Time will vary depending upon the individual case. Any comments on the amount of time you require to complete this form and/ or suggestions for reducing this burden, should be sent to the Chief Information Officer, U.S. Patent and Trademark Office, U.S. Department of Commerce, P.O. Box 1450, Alexandria, VA 22313-1450. DO NOT SEND FEES OR COMPLETED FORMS TO THIS ADDRESS. **This form can only be used when in conjunction with EFS-Web. If this form is mailed to the USPTO, it may cause delays in reinstating the patent.**

Privacy Act Statement

The Privacy Act of 1974 (P.L. 93-579) requires that you be given certain information in connection with your submission of the attached form related to a patent application or patent. Accordingly, pursuant to the requirements of the Act, please be advised that: (1) the general authority for the collection of this information is 35 U.S.C. 2(b)(2); (2) furnishing of the information solicited is voluntary; and (3) the principal purpose for which the information is used by the U.S. Patent and Trademark Office is to process and/or examine your submission related to a patent application or patent. If you do not furnish the requested information, the U.S. Patent and Trademark Office may not be able to process and/or examine your submission, which may result in termination of proceedings or abandonment of the application or expiration of the patent.

The information provided by you in this form will be subject to the following routine uses:

1. The information on this form will be treated confidentially to the extent allowed under the Freedom of Information Act (5 U.S.C. 552) and the Privacy Act (5 U.S.C. 552a). Records from this system of records may be disclosed to the Department of Justice to determine whether the Freedom of Information Act requires disclosure of these record s.

2. A record from this system of records may be disclosed, as a routine use, in the course of presenting evidence to a court, magistrate, or administrative tribunal, including disclosures to opposing counsel in the course of settlement negotiations.

3. A record in this system of records may be disclosed, as a routine use, to a Member of Congress submitting a request involving an individual, to whom the record pertains, when the individual has requested assistance from the Member with respect to the subject matter of the record.

4. A record in this system of records may be disclosed, as a routine use, to a contractor of the Agency having need for the information in order to perform a contract. Recipients of information shall be required to comply with the requirements of the Privacy Act of 1974, as amended, pursuant to 5 U.S.C. 552a(m).

5. A record related to an International Application filed under the Patent Cooperation Treaty in this system of records may be disclosed, as a routine use, to the International Bureau of the World Intellectual Property Organization, pursuant to the Patent Cooperation Treaty.

6. A record in this system of records may be disclosed, as a routine use, to another federal agency for purposes of National Security review (35 U.S.C. 181) and for review pursuant to the Atomic Energy Act (42 U.S.C. 218(c)).

7. A record from this system of records may be disclosed, as a routine use, to the Administrator, General Services, or his/her designee, during an inspection of records conducted by GSA as part of that agency's responsibility to recommend improvements in records management practices and programs, under authority of 44 U.S.C. 2904 and 2906. Such disclosure shall be made in accordance with the GSA regulations governing inspection of records for this purpose, and any other relevant (i.e., GSA or Commerce) directive. Such disclosure shall not be used to make determinations about individuals.

8. A record from this system of records may be disclosed, as a routine use, to the public after either publication of the application pursuant to 35 U.S.C. 122(b) or issuance of a patent pursuant to 35 U.S.C. 151. Further, a record may be disclosed, subject to the limitations of 37 CFR 1.14, as a routine use, to the public if the record was filed in an application which became abandoned or in which the proceedings were terminated and which application is referenced by either a published application, an application open to public inspections or an issued patent.

9. A record from this system of records may be disclosed, as a routine use, to a Federal, State, or local law enforcement agency, if the USPTO becomes aware of a violation or potential violation of law or regulation.

Under the Paperwork Reduction Act of 1995, no persons are required to respond to a collection of information unless it displays valid OMB control number.

PETITION TO ACCEPT UNINTENTIONALLY DELAYED PAYMENT OF MAINTENANCE FEE IN AN EXPIRED PATENT (37 CFR 1.378(c))

Patent Number	Issue Date (YYYY-MM-DD)	Application Number	Filing Date (YYYY-MM-DD)	Docket Number (if applicable)
6801247	2004-10-05	08989762	1997-12-12	JLR

CAUTION: Maintenance fee (and surcharge, if any) payment must correctly identify: (1) the patent number and (2) the application number of the actual U.S. application leading to issuance of that patent to ensure the fee(s) is/are associated with the correct patent. 37 CFR 1.366(c) and (d).

SMALL ENTITY
☐ Patentee claims, or has previously claimed, small entity status. See 37 CFR 1.27.

LOSS OF ENTITLEMENT TO SMALL ENTITY STATUS
☐ Patentee is no longer entitled to small entity status. See 37 CFR 1.27(g)

NOT Small Entity		Small Entity	
Fee	Code	Fee	Code
◉ 3 ½ year	(1551)	○ 3 ½ year	(2551)
○ 7 ½ year	(1552)	○ 7 ½ year	(2552)
○ 11 ½ year	(1553)	○ 11 ½ year	(2553)

SURCHARGE
The surcharge required by 37 CFR 1.20(i)(2) (Fee Code 1558) must be paid as a condition of accepting unintentionally delayed payment of the maintenance fee.

MAINTENANCE FEE (37 CFR 1.20(e)-(g))
The appropriate maintenance fee must be submitted with this petition.

STATEMENT
THE UNDERSIGNED CERTIFIES THAT THE DELAY IN PAYMENT OF THE MAINTENANCE FEE TO THIS PATENT WAS UNINTENTIONAL

PETITIONER(S) REQUEST THAT THE DELAYED PAYMENT OF THE MAINTENANCE FEE BE ACCEPTED AND THE PATENT REINSTATED

THIS PORTION MUST BE COMPLETED BY THE SIGNATORY OR SIGNATORIES

37 CFR 1.378(d) states: "Any petition under this section must be signed by an attorney or agent registered to practice before the Patent and Trademark Office, or by the patentee, the assignee, or other party in interest."

I certify, in accordance with 37 CFR 1.4(d)(4) that I am

◉ An attorney or agent registered to practice before the Patent and Trademark Office

○ A sole patentee

○ A joint patentee; I certify that I am authorized to sign this submission on behalf of all the other patentees.

○ A joint patentee; all of whom are signing this e-petition

○ The assignee of record of the entire interest

Patent Practitioner			
A signature of the applicant or representative is required in accordance with 37 CFR 1.33 and 10.18. Please see 37 CFR 1.4(d) for the form of the signature			
Signature	/DJCushing/	Date (YYYY-MM-DD)	2009-03-02
Name	David J. Cushing	Registration Number	28703

This collection of information is required by 37 CFR 1.378(c). The information is required to obtain or retain a benefit by the public which is to file (and by the USPTO to process) an application. Confidentiality is governed by 35 U.S.C. 122 and 37 CFR 1.11 and 1.14. This collection is estimated to take 1 hour to complete, including gathering, preparing, and submitting the completed application form to the USPTO. Time will vary depending upon the individual case. Any comments on the amount of time you require to complete this form and/ or suggestions for reducing this burden, should be sent to the Chief Information Officer, U.S. Patent and Trademark Office, U.S. Department of Commerce, P.O. Box 1450, Alexandria, VA 22313-1450. DO NOT SEND FEES OR COMPLETED FORMS TO THIS ADDRESS. **This form can only be used when in conjunction with EFS-Web. If this form is mailed to the USPTO, it may cause delays in reinstating the patent.**

Privacy Act Statement

The Privacy Act of 1974 (P.L. 93-579) requires that you be given certain information in connection with your submission of the attached form related to a patent application or patent. Accordingly, pursuant to the requirements of the Act, please be advised that: (1) the general authority for the collection of this information is 35 U.S.C. 2(b)(2); (2) furnishing of the information solicited is voluntary; and (3) the principal purpose for which the information is used by the U.S. Patent and Trademark Office is to process and/or examine your submission related to a patent application or patent. If you do not furnish the requested information, the U.S. Patent and Trademark Office may not be able to process and/or examine your submission, which may result in termination of proceedings or abandonment of the application or expiration of the patent.

The information provided by you in this form will be subject to the following routine uses:

1. The information on this form will be treated confidentially to the extent allowed under the Freedom of Information Act (5 U.S.C. 552) and the Privacy Act (5 U.S.C. 552a). Records from this system of records may be disclosed to the Department of Justice to determine whether the Freedom of Information Act requires disclosure of these record s.

2. A record from this system of records may be disclosed, as a routine use, in the course of presenting evidence to a court, magistrate, or administrative tribunal, including disclosures to opposing counsel in the course of settlement negotiations.

3. A record in this system of records may be disclosed, as a routine use, to a Member of Congress submitting a request involving an individual, to whom the record pertains, when the individual has requested assistance from the Member with respect to the subject matter of the record.

4. A record in this system of records may be disclosed, as a routine use, to a contractor of the Agency having need for the information in order to perform a contract. Recipients of information shall be required to comply with the requirements of the Privacy Act of 1974, as amended, pursuant to 5 U.S.C. 552a(m).

5. A record related to an International Application filed under the Patent Cooperation Treaty in this system of records may be disclosed, as a routine use, to the International Bureau of the World Intellectual Property Organization, pursuant to the Patent Cooperation Treaty.

6. A record in this system of records may be disclosed, as a routine use, to another federal agency for purposes of National Security review (35 U.S.C. 181) and for review pursuant to the Atomic Energy Act (42 U.S.C. 218(c)).

7. A record from this system of records may be disclosed, as a routine use, to the Administrator, General Services, or his/her designee, during an inspection of records conducted by GSA as part of that agency's responsibility to recommend improvements in records management practices and programs, under authority of 44 U.S.C. 2904 and 2906. Such disclosure shall be made in accordance with the GSA regulations governing inspection of records for this purpose, and any other relevant (i.e., GSA or Commerce) directive. Such disclosure shall not be used to make determinations about individuals.

8. A record from this system of records may be disclosed, as a routine use, to the public after either publication of the application pursuant to 35 U.S.C. 122(b) or issuance of a patent pursuant to 35 U.S.C. 151. Further, a record may be disclosed, subject to the limitations of 37 CFR 1.14, as a routine use, to the public if the record was filed in an application which became abandoned or in which the proceedings were terminated and which application is referenced by either a published application, an application open to public inspections or an issued patent.

9. A record from this system of records may be disclosed, as a routine use, to a Federal, State, or local law enforcement agency, if the USPTO becomes aware of a violation or potential violation of law or regulation.

UNITED STATES PATENT AND TRADEMARK OFFICE

Commissioner for Patents
United States Patent and Trademark Office
P.O. Box 1450
Alexandria, VA 22313-1450
www.uspto.gov

In re Patent No. 6801247
Issue Date: October 5,2004
Application No. 08989762
Filed: December 12,1997
Attorney Docket No. 11341278

:

:DECISION GRANTING PETITION
:UNDER 37 CFR 1.378(c)

:

This is a decision on the electronic petition, filed March 2,2009 ,under 37 CFR 1.378(c) to accept the unintentionally delayed payment of the 3.5 year maintenance fee for the above-identified patent.

The petition is **GRANTED**.

The maintenance fee is accepted, and the above-identified patent reinstated as of March 2,2009 .
This decision also constitutes notice that the fee has been accepted. An electronic copy of the petition and this decision has been created as an entry in the Image File Wrapper. Nevertheless, petitioner should print and retain an independent copy.

Telephone inquiries related to this electronic decision should be directed to the Electronic Business Center at 1-866-217-9197.

UNITED STATES PATENT AND TRADEMARK OFFICE

Commissioner for Patents
United States Patent and Trademark Office
P.O. Box 1450
Alexandria, VA 22313-1450
www.uspto.gov

In re Patent No. 6151676
Issue Date: November 21,2000
Application No. 08989875
Filed: December 24,1997
Attorney Docket No. PHA23339

:
:DECISION GRANTING PETITION
:UNDER 37 CFR 1.378(c)
:

This is a decision on the electronic petition, filed May 27,2009 ,under 37 CFR 1.378(c) to accept the unintentionally delayed payment of the 7.5 year maintenance fee for the above-identified patent.

The petition is **GRANTED**.

The maintenance fee is accepted, and the above-identified patent reinstated as of May 27,2009 .
This decision also constitutes notice that the fee has been accepted. An electronic copy of the petition and this decision has been created as an entry in the Image File Wrapper. Nevertheless, petitioner should print and retain an independent copy.

Telephone inquiries related to this electronic decision should be directed to the Electronic Business Center at 1-866-217-9197.

PTO/SB/66 (03-09)
Approved for use through 03/31/2012. OMB 0651-0016
U.S. Patent and Trademark Office: U.S. DEPARTMENT OF COMMERCE
Under the Paperwork Reduction Act of 1995, no persons are required to respond to a collection of information unless it displays valid OMB control number.

PETITION TO ACCEPT UNINTENTIONALLY DELAYED PAYMENT OF MAINTENANCE FEE IN AN EXPIRED PATENT (37 CFR 1.378(c))

Patent Number	Issue Date (YYYY-MM-DD)	Application Number	Filing Date (YYYY-MM-DD)	Docket Number (if applicable)
6151676	2000-11-21	08989875	1997-12-24	

CAUTION: Maintenance fee (and surcharge, if any) payment must correctly identify: (1) the patent number and (2) the application number of the actual U.S. application leading to issuance of that patent to ensure the fee(s) is/are associated with the correct patent. 37 CFR 1.366(c) and (d).

SMALL ENTITY

☐ Patentee claims, or has previously claimed, small entity status. See 37 CFR 1.27.

LOSS OF ENTITLEMENT TO SMALL ENTITY STATUS

☐ Patentee is no longer entitled to small entity status. See 37 CFR 1.27(g)

NOT Small Entity			Small Entity		
	Fee	Code		Fee	Code
○	3 ½ year	(1551)	○	3 ½ year	(2551)
◉	7 ½ year	(1552)	○	7 ½ year	(2552)
○	11 ½ year	(1553)	○	11 ½ year	(2553)

SURCHARGE

The surcharge required by 37 CFR 1.20(i)(2) (Fee Code 1558) must be paid as a condition of accepting unintentionally delayed payment of the maintenance fee.

MAINTENANCE FEE (37 CFR 1.20(e)-(g))

The appropriate maintenance fee must be submitted with this petition.

STATEMENT

THE UNDERSIGNED CERTIFIES THAT THE DELAY IN PAYMENT OF THE MAINTENANCE FEE TO THIS PATENT WAS UNINTENTIONAL

PETITIONER(S) REQUEST THAT THE DELAYED PAYMENT OF THE MAINTENANCE FEE BE ACCEPTED AND THE PATENT REINSTATED

THIS PORTION MUST BE COMPLETED BY THE SIGNATORY OR SIGNATORIES

37 CFR 1.378(d) states: "Any petition under this section must be signed by an attorney or agent registered to practice before the Patent and Trademark Office, or by the patentee, the assignee, or other party in interest."

I certify, in accordance with 37 CFR 1.4(d)(4) that I am

◉ An attorney or agent registered to practice before the Patent and Trademark Office

○ A sole patentee

○ A joint patentee; I certify that I am authorized to sign this submission on behalf of all the other patentees.

○ A joint patentee; all of whom are signing this e-petition

○ The assignee of record of the entire interest

Patent Practitioner			
A signature of the applicant or representative is required in accordance with 37 CFR 1.33 and 10.18. Please see 37 CFR 1.4(d) for the form of the signature			
Signature	/Michael E Marion/	Date (YYYY-MM-DD)	2009-05-18
Name	Michael E. Marion	Registration Number	32266

This collection of information is required by 37 CFR 1.378(c). The information is required to obtain or retain a benefit by the public which is to file (and by the USPTO to process) an application. Confidentiality is governed by 35 U.S.C. 122 and 37 CFR 1.11 and 1.14. This collection is estimated to take 1 hour to complete, including gathering, preparing, and submitting the completed application form to the USPTO. Time will vary depending upon the individual case. Any comments on the amount of time you require to complete this form and/ or suggestions for reducing this burden, should be sent to the Chief Information Officer, U.S. Patent and Trademark Office, U.S. Department of Commerce, P.O. Box 1450, Alexandria, VA 22313-1450. DO NOT SEND FEES OR COMPLETED FORMS TO THIS ADDRESS. **This form can only be used when in conjunction with EFS-Web. If this form is mailed to the USPTO, it may cause delays in reinstating the patent.**

Privacy Act Statement

The Privacy Act of 1974 (P.L. 93-579) requires that you be given certain information in connection with your submission of the attached form related to a patent application or patent. Accordingly, pursuant to the requirements of the Act, please be advised that: (1) the general authority for the collection of this information is 35 U.S.C. 2(b)(2); (2) furnishing of the information solicited is voluntary; and (3) the principal purpose for which the information is used by the U.S. Patent and Trademark Office is to process and/or examine your submission related to a patent application or patent. If you do not furnish the requested information, the U.S. Patent and Trademark Office may not be able to process and/or examine your submission, which may result in termination of proceedings or abandonment of the application or expiration of the patent.

The information provided by you in this form will be subject to the following routine uses:

1. The information on this form will be treated confidentially to the extent allowed under the Freedom of Information Act (5 U.S.C. 552) and the Privacy Act (5 U.S.C. 552a). Records from this system of records may be disclosed to the Department of Justice to determine whether the Freedom of Information Act requires disclosure of these records.

2. A record from this system of records may be disclosed, as a routine use, in the course of presenting evidence to a court, magistrate, or administrative tribunal, including disclosures to opposing counsel in the course of settlement negotiations.

3. A record in this system of records may be disclosed, as a routine use, to a Member of Congress submitting a request involving an individual, to whom the record pertains, when the individual has requested assistance from the Member with respect to the subject matter of the record.

4. A record in this system of records may be disclosed, as a routine use, to a contractor of the Agency having need for the information in order to perform a contract. Recipients of information shall be required to comply with the requirements of the Privacy Act of 1974, as amended, pursuant to 5 U.S.C. 552a(m).

5. A record related to an International Application filed under the Patent Cooperation Treaty in this system of records may be disclosed, as a routine use, to the International Bureau of the World Intellectual Property Organization, pursuant to the Patent Cooperation Treaty.

6. A record in this system of records may be disclosed, as a routine use, to another federal agency for purposes of National Security review (35 U.S.C. 181) and for review pursuant to the Atomic Energy Act (42 U.S.C. 218(c)).

7. A record from this system of records may be disclosed, as a routine use, to the Administrator, General Services, or his/her designee, during an inspection of records conducted by GSA as part of that agency's responsibility to recommend improvements in records management practices and programs, under authority of 44 U.S.C. 2904 and 2906. Such disclosure shall be made in accordance with the GSA regulations governing inspection of records for this purpose, and any other relevant (i.e., GSA or Commerce) directive. Such disclosure shall not be used to make determinations about individuals.

8. A record from this system of records may be disclosed, as a routine use, to the public after either publication of the application pursuant to 35 U.S.C. 122(b) or issuance of a patent pursuant to 35 U.S.C. 151. Further, a record may be disclosed, subject to the limitations of 37 CFR 1.14, as a routine use, to the public if the record was filed in an application which became abandoned or in which the proceedings were terminated and which application is referenced by either a published application, an application open to public inspections or an issued patent.

9. A record from this system of records may be disclosed, as a routine use, to a Federal, State, or local law enforcement agency, if the USPTO becomes aware of a violation or potential violation of law or regulation.

SPE RESPONSE FOR CERTIFICATE OF CORRECTION

Paper No.: _____

DATE : 01/16/10

TO SPE OF : ART UNIT 2854

SUBJECT : Request for Certificate of Correction for Appl. No.: 08989924 Patent No.: 5855170

Please respond to this request for a certificate of correction within 7 days.

FOR IFW FILES:

Please review the requested changes/corrections as shown in the **COCIN** document(s) in the IFW application image. No new matter should be introduced, nor should the scope or meaning of the claims be changed.

Please complete the response (see below) and forward the completed response to scanning using document code **COCX**.

FOR PAPER FILES:

Please review the requested changes/corrections as shown in the attached certificate of correction. Please complete this form (see below) and forward it with the file to:

Certificates of Correction Branch (C of C)
Randolph Square 9D40-D
Palm Location 7580
You can fax the Directors/SPE response to 571-270-9990

Lamonte Newsome
Certificates of Correction Branch
703-756-1574

Thank You For Your Assistance

The request for issuing the above-identified correction(s) is hereby:
Note your decision on the appropriate box.

- ☐ **Approved** — **All** changes apply.
- ☐ **Approved in Part** — Specify below which changes **do not** apply.
- ☒ **Denied** — State the reasons for denial below.

Comments: Because the Inventor's name has completly changed from Sling shih to Hsu-shen Shine which is not merely a clerical or typographical misstake under 37 CFR 1.323.

Judy Nguyen
JUDY NGUYEN
SUPERVISORY PATENT EXAMINER
2854

SPE RESPONSE FOR CERTIFICATE OF CORRECTION

SPE

Art Unit

UNITED STATES PATENT AND TRADEMARK OFFICE

Commissioner for Patents
United States Patent and Trademark Office
P.O. Box 1450
Alexandria, VA 22313-1450
www.uspto.gov

Date Mailed : 02/24/10

Patent No. : 5855170
Patent Issued : 01/05/99
Docket No. : **7257/55398**

Re: Request for Certificate of Correction

Consideration has been given your request for the issuance of a certificate of correction for the above-identified patent under the provisions of Rule(s) 1.322.

Respecting the alleged errors in the documents filed on 01/07/10; please see attachments. **"Therefore, no correction(s) is in order here under United States Codes (U.S.C.) 254 and the Code of Federal Regulation (C.F.R.) 1322."**

In view of the foregoing, your request in this matter is hereby denied.

Lamonte M. Newsome
For Mary Diggs, Supervisor
Decisions & Certificates
Of Correction Branch
(703) 305-8309 or (703) 756-1574

COOPER & DUNHAM, LLP
30 Rockefeller Plaza
20th Floor
NEW YORK NY 10112

LMN

SPE RESPONSE FOR CERTIFICATE OF CORRECTION

Paper No.: _____

DATE : 01/16/10

TO SPE OF : ART UNIT 2854

SUBJECT : Request for Certificate of Correction for Appl. No.: 08989924 Patent No.: 5855170

Please respond to this request for a certificate of correction within 7 days.

FOR IFW FILES:

Please review the requested changes/corrections as shown in the **COCIN** document(s) in the IFW application image. No new matter should be introduced, nor should the scope or meaning of the claims be changed.

Please complete the response (see below) and forward the completed response to scanning using document code **COCX**.

FOR PAPER FILES:

Please review the requested changes/corrections as shown in the attached certificate of correction. Please complete this form (see below) and forward it with the file to:

Certificates of Correction Branch (C of C)
Randolph Square 9D40-D
Palm Location 7580
You can fax the Directors/SPE response to 571-270-9990

Lamonte Newsome
Certificates of Correction Branch
703-756-1574

Thank You For Your Assistance

The request for issuing the above-identified correction(s) is hereby:
Note your decision on the appropriate box.

- ☐ **Approved** — **All** changes apply.
- ☐ **Approved in Part** — Specify below which changes **do not** apply.
- ☒ **Denied** — State the reasons for denial below.

Comments: Because the inventor's name has completly changed from Sling Shih to Hsu-shen Shine which is not merely a clerical or typographical mistake under 37 CFR 1.323.

Judy Nguyen
JUDY NGUYEN
SUPERVISORY PATENT EXAMINER
2854

UNITED STATES PATENT AND TRADEMARK OFFICE

Commissioner for Patents
United States Patent and Trademark Office
P.O. Box 1450
Alexandria, VA 22313-1450
www.uspto.gov

In re Patent No. 5973903
Issue Date: October 26,1999
Application No. 08990068
Filed: December 12,1997
Attorney Docket No. 8517

:
:DECISION GRANTING PETITION
:UNDER 37 CFR 1.378(c)
:

This is a decision on the electronic petition, filed October 21,2008 ,under 37 CFR 1.378(c) to accept the unintentionally delayed payment of the 7.5 year maintenance fee for the above-identified patent.

The petition is **GRANTED**.

The maintenance fee is accepted, and the above-identified patent reinstated as of October 21,2008 . This decision also constitutes notice that the fee has been accepted. An electronic copy of the petition and this decision has been created as an entry in the Image File Wrapper. Nevertheless, petitioner should print and retain an independent copy.

Telephone inquiries related to this electronic decision should be directed to the Electronic Business Center at 1-866-217-9197.

Under the Paperwork Reduction Act of 1995, no persons are required to respond to a collection of information unless it displays valid OMB control number.

PETITION TO ACCEPT UNINTENTIONALLY DELAYED PAYMENT OF MAINTENANCE FEE IN AN EXPIRED PATENT (37 CFR 1.378(c))

Patent Number	Issue Date (YYYY-MM-DD)	Application Number	Filing Date (YYYY-MM-DD)	Docket Number (if applicable)
5973903	1999-10-26	08990068	1997-12-12	8517

CAUTION: Maintenance fee (and surcharge, if any) payment must correctly identify: (1) the patent number and (2) the application number of the actual U.S. application leading to issuance of that patent to ensure the fee(s) is/are associated with the correct patent. 37 CFR 1.366(c) and (d).

SMALL ENTITY
☐ Patentee claims, or has previously claimed, small entity status. See 37 CFR 1.27.

LOSS OF ENTITLEMENT TO SMALL ENTITY STATUS
☐ Patentee is no longer entitled to small entity status. See 37 CFR 1.27(g)

NOT Small Entity

	Fee	Code
○	3 ½ year	(1551)
◉	7 ½ year	(1552)
○	11 ½ year	(1553)

Small Entity

	Fee	Code
○	3 ½ year	(2551)
○	7 ½ year	(2552)
○	11 ½ year	(2553)

SURCHARGE
The surcharge required by 37 CFR 1.20(i)(2) (Fee Code 1558) must be paid as a condition of accepting unintentionally delayed payment of the maintenance fee.

MAINTENANCE FEE (37 CFR 1.20(e)-(g))
The appropriate maintenance fee must be submitted with this petition.

STATEMENT
THE UNDERSIGNED CERTIFIES THAT THE DELAY IN PAYMENT OF THE MAINTENANCE FEE TO THIS PATENT WAS UNINTENTIONAL

PETITIONER(S) REQUEST THAT THE DELAYED PAYMENT OF THE MAINTENANCE FEE BE ACCEPTED AND THE PATENT REINSTATED

THIS PORTION MUST BE COMPLETED BY THE SIGNATORY OR SIGNATORIES

37 CFR 1.378(d) states: "Any petition under this section must be signed by an attorney or agent registered to practice before the Patent and Trademark Office, or by the patentee, the assignee, or other party in interest."

I certify, in accordance with 37 CFR 1.4(d)(4) that I am

○ An attorney or agent registered to practice before the Patent and Trademark Office

○ A sole patentee

○ A joint patentee; I certify that I am authorized to sign this submission on behalf of all the other patentees.

○ A joint patentee; all of whom are signing this e-petition

◉ The assignee of record of the entire interest

The Assignee of record of the entire interest			
Under 37 CFR 3.71 an assignee becomes of record by filing a statement in compliance with 37 CFR 3.73(b). Signature requirements are set forth in 37 CFR 1.4(d), and the undersigned certifies that he / she is empowered to act on behalf of the assignee of the entire interest			
Signature	/Fred Ching/	Date (YYYY-MM-DD)	2008-10-21
Name	Fred Ching		
Enter Reel and Frame Number		Remove	
Reel Number	017833	Frame Number	0309
Click ADD for additional Reel Number and Frame Number		Add	

This collection of information is required by 37 CFR 1.378(c). The information is required to obtain or retain a benefit by the public which is to file (and by the USPTO to process) an application. Confidentiality is governed by 35 U.S.C. 122 and 37 CFR 1.11 and 1.14. This collection is estimated to take 1 hour to complete, including gathering, preparing, and submitting the completed application form to the USPTO. Time will vary depending upon the individual case. Any comments on the amount of time you require to complete this form and/ or suggestions for reducing this burden, should be sent to the Chief Information Officer, U.S. Patent and Trademark Office, U.S. Department of Commerce, P.O. Box 1450, Alexandria, VA 22313-1450. DO NOT SEND FEES OR COMPLETED FORMS TO THIS ADDRESS. **This form can only be used when in conjunction with EFS-Web. If this form is mailed to the USPTO, it may cause delays in reinstating the patent.**

Privacy Act Statement

The Privacy Act of 1974 (P.L. 93-579) requires that you be given certain information in connection with your submission of the attached form related to a patent application or patent. Accordingly, pursuant to the requirements of the Act, please be advised that: (1) the general authority for the collection of this information is 35 U.S.C. 2(b)(2); (2) furnishing of the information solicited is voluntary; and (3) the principal purpose for which the information is used by the U.S. Patent and Trademark Office is to process and/or examine your submission related to a patent application or patent. If you do not furnish the requested information, the U.S. Patent and Trademark Office may not be able to process and/or examine your submission, which may result in termination of proceedings or abandonment of the application or expiration of the patent.

The information provided by you in this form will be subject to the following routine uses:

1. The information on this form will be treated confidentially to the extent allowed under the Freedom of Information Act (5 U.S.C. 552) and the Privacy Act (5 U.S.C. 552a). Records from this system of records may be disclosed to the Department of Justice to determine whether the Freedom of Information Act requires disclosure of these record s.

2. A record from this system of records may be disclosed, as a routine use, in the course of presenting evidence to a court, magistrate, or administrative tribunal, including disclosures to opposing counsel in the course of settlement negotiations.

3. A record in this system of records may be disclosed, as a routine use, to a Member of Congress submitting a request involving an individual, to whom the record pertains, when the individual has requested assistance from the Member with respect to the subject matter of the record.

4. A record in this system of records may be disclosed, as a routine use, to a contractor of the Agency having need for the information in order to perform a contract. Recipients of information shall be required to comply with the requirements of the Privacy Act of 1974, as amended, pursuant to 5 U.S.C. 552a(m).

5. A record related to an International Application filed under the Patent Cooperation Treaty in this system of records may be disclosed, as a routine use, to the International Bureau of the World Intellectual Property Organization, pursuant to the Patent Cooperation Treaty.

6. A record in this system of records may be disclosed, as a routine use, to another federal agency for purposes of National Security review (35 U.S.C. 181) and for review pursuant to the Atomic Energy Act (42 U.S.C. 218(c)).

7. A record from this system of records may be disclosed, as a routine use, to the Administrator, General Services, or his/her designee, during an inspection of records conducted by GSA as part of that agency's responsibility to recommend improvements in records management practices and programs, under authority of 44 U.S.C. 2904 and 2906. Such disclosure shall be made in accordance with the GSA regulations governing inspection of records for this purpose, and any other relevant (i.e., GSA or Commerce) directive. Such disclosure shall not be used to make determinations about individuals.

8. A record from this system of records may be disclosed, as a routine use, to the public after either publication of the application pursuant to 35 U.S.C. 122(b) or issuance of a patent pursuant to 35 U.S.C. 151. Further, a record may be disclosed, subject to the limitations of 37 CFR 1.14, as a routine use, to the public if the record was filed in an application which became abandoned or in which the proceedings were terminated and which application is referenced by either a published application, an application open to public inspections or an issued patent.

9. A record from this system of records may be disclosed, as a routine use, to a Federal, State, or local law enforcement agency, if the USPTO becomes aware of a violation or potential violation of law or regulation.

UNITED STATES PATENT AND TRADEMARK OFFICE

COMMISSIONER FOR PATENTS
UNITED STATES PATENT AND TRADEMARK OFFICE
WASHINGTON, D.C. 20231
www.uspto.gov

Paper No. 22

Mr. David Feigenbaum, Esq.
Fish and Richardson PC
225 Franklin Street
Boston, MA 02110

COPY MAILED

MAR 1 2 2002

OFFICE OF PETITIONS

In re Application of :
Heidi Picher-Dempsey :
Application No. 08/990,096 :
Filed: December 12, 1997 :
Attorney Docket No. 12128-027001 :

ON PETITION

This is a decision on the petition under 37 CFR 1.137(b), filed January 4, 2002, to revive the above-identified application.

The petition is **GRANTED**.

The above-identified application became abandoned for failure to reply within the meaning of 37 CFR 1.113 in a timely manner to the final Office action mailed May 3, 2001, which set a shortened statutory period for reply of three (3) months. No extensions of time under the provisions of 37 CFR 1.136(a) were obtained. Accordingly, the application became abandoned on August 4, 2001.

An extension of time under 37 CFR 1.136 must be filed prior to the expiration of the maximum extendable period for reply. See In re Application of S., 8 USPQ2d 1630, 1631 (Comm'r Pats. 1988). Accordingly, since the $920.00 extension of time submitted with the petition on January 4, 2002 was subsequent to the maximum extendable period for reply, this fee is unnecessary and will be credited to petitioner's deposit account.

The two-month period for filing an appeal brief in triplicate (accompanied by the fee required by 37 CFR 1.17(c)), runs from the date of this decision.

Telephone inquiries concerning this decision should be directed to Cheryl Gibson-Baylor at (703)308-5111, or in her absence, Sherry Brinkley at (703)305-9220.

The application file is being forwarded to Technology Center 2700, Art Unit 2738.

Cheryl Gibson-Baylor
Petitions Examiner
Office of Petitions
Office of the Deputy Commissioner
for Patent Examination Policy

Sherry Brinkley
Petitions Examiner

UNITED STATES PATENT AND TRADEMARK OFFICE

Commissioner for Patents
United States Patent and Trademark Office
P.O. Box 1450
Alexandria, VA 22313-1450
www.uspto.gov

MAIL

SEP 0 6 2005

DIRECTOR OFFICE
TECHNOLOGY CENTER 2600

FAEGRE & BENSON LLP
PATENT DOCKETING
2200 WELLS FARGO CENTER
MINNEAPOLIS MN 55402

In re Application of
Heidi Picher-Dempsey
Application No. 08/990,096
Filed: December 12, 1997
For: **SECURE NETWORK ARCHITECTURE WITH QUALITY OF SERVICE**

DECISION ON PETITION TO WITHDRAW HOLDING OF ABANDONMENT

This is a decision on the Petition for Withdrawal of Abandonment, filed August 24, 2005, requesting the holding of abandonment be withdrawn in the above-identified application.

This application was held abandoned for failure to timely respond with appellant's submission of a brief within the two months time frame set forth in the petition decision mailed March 12, 2002. A Notice of Abandonment had not been mailed.

Petitioner states that a response, specifically their appeal brief, was in fact timely filed. To support this assertion, petitioner has submitted a date-stamped copy of a return postcard which acknowledges receipt by the Patent and Trademark Office Board of Patent Appeals and Interferences of an appeal brief in triplicate along with a filing fee of $320.00, on May 31, 2002.

M.P.E.P. § 503 states that "[a] post card receipt which itemizes and properly identifies the papers which are being filed serves as *prima facie* evidence of receipt in the PTO of all the items listed thereon on the date stamped thereon by the PTO."

The response is considered timely filed since the post card receipt bears a date of May 31, 2002, more than two months from the mailing of the petition decision, where the response includes a certificate of mailing certifying deposit on Monday, May 13, 2002. Accordingly, the copy of the response is accepted.

In view of the above stated reasons, the Notice of Abandonment is hereby vacated and the holding of abandonment withdrawn.

The petition is **GRANTED.**

The application file will be forwarded to the Technology Center's technical support staff for entry of the copy of the appeal brief submitted with the subject petition. The original check for $320.00 for filing appellant's brief cannot be located. Accordingly, the fee ($320.00) will be charged to applicant's Deposit Account No. 06-0029 as set forth in the petition. From there, the file will be forwarded to the examiner for appropriate action in due course.

Dwayne Bost
Special Program Examiner
Technology Center 2600
Communications

PTO/SB/66 (03-09)
Approved for use through 03/31/2012. OMB 0651-0016
U.S. Patent and Trademark Office: U.S. DEPARTMENT OF COMMERCE
Under the Paperwork Reduction Act of 1995, no persons are required to respond to a collection of information unless it displays valid OMB control number.

PETITION TO ACCEPT UNINTENTIONALLY DELAYED PAYMENT OF MAINTENANCE FEE IN AN EXPIRED PATENT (37 CFR 1.378(c))

Patent Number	Issue Date (YYYY-MM-DD)	Application Number	Filing Date (YYYY-MM-DD)	Docket Number (if applicable)
5,927,094	1999-07-27	08/990,373	1997-12-15	ACER-45644

CAUTION: Maintenance fee (and surcharge, if any) payment must correctly identify: (1) the patent number and (2) the application number of the actual U.S. application leading to issuance of that patent to ensure the fee(s) is/are associated with the correct patent. 37 CFR 1.366(c) and (d).

SMALL ENTITY
☐ Patentee claims, or has previously claimed, small entity status. See 37 CFR 1.27.

LOSS OF ENTITLEMENT TO SMALL ENTITY STATUS
☐ Patentee is no longer entitled to small entity status. See 37 CFR 1.27(g)

NOT Small Entity		Small Entity	
Fee	Code	Fee	Code
○ 3 ½ year	(1551)	○ 3 ½ year	(2551)
◉ 7 ½ year	(1552)	○ 7 ½ year	(2552)
○ 11 ½ year	(1553)	○ 11 ½ year	(2553)

SURCHARGE
The surcharge required by 37 CFR 1.20(i)(2) (Fee Code 1558) must be paid as a condition of accepting unintentionally delayed payment of the maintenance fee.

MAINTENANCE FEE (37 CFR 1.20(e)-(g))
The appropriate maintenance fee must be submitted with this petition.

STATEMENT
THE UNDERSIGNED CERTIFIES THAT THE DELAY IN PAYMENT OF THE MAINTENANCE FEE TO THIS PATENT WAS UNINTENTIONAL

PETITIONER(S) REQUEST THAT THE DELAYED PAYMENT OF THE MAINTENANCE FEE BE ACCEPTED AND THE PATENT REINSTATED

THIS PORTION MUST BE COMPLETED BY THE SIGNATORY OR SIGNATORIES

37 CFR 1.378(d) states: "Any petition under this section must be signed by an attorney or agent registered to practice before the Patent and Trademark Office, or by the patentee, the assignee, or other party in interest."

I certify, in accordance with 37 CFR 1.4(d)(4) that I am

◉ An attorney or agent registered to practice before the Patent and Trademark Office

○ A sole patentee

○ A joint patentee; I certify that I am authorized to sign this submission on behalf of all the other patentees.

○ A joint patentee; all of whom are signing this e-petition

○ The assignee of record of the entire interest

Patent Practitioner			
A signature of the applicant or representative is required in accordance with 37 CFR 1.33 and 10.18. Please see 37 CFR 1.4(d) for the form of the signature			
Signature	/Aaron A. Fishman/	Date (YYYY-MM-DD)	2009-07-14
Name	Aaron A. Fishman	Registration Number	44682

This collection of information is required by 37 CFR 1.378(c). The information is required to obtain or retain a benefit by the public which is to file (and by the USPTO to process) an application. Confidentiality is governed by 35 U.S.C. 122 and 37 CFR 1.11 and 1.14. This collection is estimated to take 1 hour to complete, including gathering, preparing, and submitting the completed application form to the USPTO. Time will vary depending upon the individual case. Any comments on the amount of time you require to complete this form and/ or suggestions for reducing this burden, should be sent to the Chief Information Officer, U.S. Patent and Trademark Office, U.S. Department of Commerce, P.O. Box 1450, Alexandria, VA 22313-1450. DO NOT SEND FEES OR COMPLETED FORMS TO THIS ADDRESS. **This form can only be used when in conjunction with EFS-Web. If this form is mailed to the USPTO, it may cause delays in reinstating the patent.**

Privacy Act Statement

The Privacy Act of 1974 (P.L. 93-579) requires that you be given certain information in connection with your submission of the attached form related to a patent application or patent. Accordingly, pursuant to the requirements of the Act, please be advised that: (1) the general authority for the collection of this information is 35 U.S.C. 2(b)(2); (2) furnishing of the information solicited is voluntary; and (3) the principal purpose for which the information is used by the U.S. Patent and Trademark Office is to process and/or examine your submission related to a patent application or patent. If you do not furnish the requested information, the U.S. Patent and Trademark Office may not be able to process and/or examine your submission, which may result in termination of proceedings or abandonment of the application or expiration of the patent.

The information provided by you in this form will be subject to the following routine uses:

1. The information on this form will be treated confidentially to the extent allowed under the Freedom of Information Act (5 U.S.C. 552) and the Privacy Act (5 U.S.C. 552a). Records from this system of records may be disclosed to the Department of Justice to determine whether the Freedom of Information Act requires disclosure of these records.

2. A record from this system of records may be disclosed, as a routine use, in the course of presenting evidence to a court, magistrate, or administrative tribunal, including disclosures to opposing counsel in the course of settlement negotiations.

3. A record in this system of records may be disclosed, as a routine use, to a Member of Congress submitting a request involving an individual, to whom the record pertains, when the individual has requested assistance from the Member with respect to the subject matter of the record.

4. A record in this system of records may be disclosed, as a routine use, to a contractor of the Agency having need for the information in order to perform a contract. Recipients of information shall be required to comply with the requirements of the Privacy Act of 1974, as amended, pursuant to 5 U.S.C. 552a(m).

5. A record related to an International Application filed under the Patent Cooperation Treaty in this system of records may be disclosed, as a routine use, to the International Bureau of the World Intellectual Property Organization, pursuant to the Patent Cooperation Treaty.

6. A record in this system of records may be disclosed, as a routine use, to another federal agency for purposes of National Security review (35 U.S.C. 181) and for review pursuant to the Atomic Energy Act (42 U.S.C. 218(c)).

7. A record from this system of records may be disclosed, as a routine use, to the Administrator, General Services, or his/her designee, during an inspection of records conducted by GSA as part of that agency's responsibility to recommend improvements in records management practices and programs, under authority of 44 U.S.C. 2904 and 2906. Such disclosure shall be made in accordance with the GSA regulations governing inspection of records for this purpose, and any other relevant (i.e., GSA or Commerce) directive. Such disclosure shall not be used to make determinations about individuals.

8. A record from this system of records may be disclosed, as a routine use, to the public after either publication of the application pursuant to 35 U.S.C. 122(b) or issuance of a patent pursuant to 35 U.S.C. 151. Further, a record may be disclosed, subject to the limitations of 37 CFR 1.14, as a routine use, to the public if the record was filed in an application which became abandoned or in which the proceedings were terminated and which application is referenced by either a published application, an application open to public inspections or an issued patent.

9. A record from this system of records may be disclosed, as a routine use, to a Federal, State, or local law enforcement agency, if the USPTO becomes aware of a violation or potential violation of law or regulation.

UNITED STATES PATENT AND TRADEMARK OFFICE

Commissioner for Patents
United States Patent and Trademark Office
P.O. Box 1450
Alexandria, VA 22313-1450
www.uspto.gov

In re Patent No. 5927094
Issue Date: July 27,1999
Application No. 08990373
Filed: December 15,1997
Attorney Docket No. 450.182US1

:
:DECISION GRANTING PETITION
:UNDER 37 CFR 1.378(c)
:

This is a decision on the electronic petition, filed July 14,2009 ,under 37 CFR 1.378(c) to accept the unintentionally delayed payment of the 7.5 year maintenance fee for the above-identified patent.

The petition is **GRANTED**.

The maintenance fee is accepted, and the above-identified patent reinstated as of July 14,2009 .
This decision also constitutes notice that the fee has been accepted. An electronic copy of the petition and this decision has been created as an entry in the Image File Wrapper. Nevertheless, petitioner should print and retain an independent copy.

Telephone inquiries related to this electronic decision should be directed to the Electronic Business Center at 1-866-217-9197.

SPE RESPONSE FOR CERTIFICATE OF CORRECTION

DATE : 09/12/03

Paper No.: 15

TO SPE OF : ART UNIT 2600

SUBJECT : Request for Certificate of Correction on Patent No.: 5,974,526

A response is requested with respect to the accompanying request for a certificate of correction.

Please complete this form and return with file, within **7** days to:
Certificates of Correction Branch - PK 3-915
Palm location **7580** - Tel. No. 305-8309

With respect to the change(s) requested, correcting Office and/or Applicant's errors, should the patent read as shown in the certificate of correction? No new matter should be introduced, nor should the scope or meaning of the claims be changed.

Thank You For Your Assistance

Certificates of Correction Branch

The Request for Certificate of Correction in the above-identified patent is hereby:
Note your decision on the appropriate box.

- [x] **Approved** — All changes apply.
- [ ] **Approved in Part** — Specify below which changes **do not** apply.
- [ ] **Denied** — State the reasons for denial below.

Comments:

Corrections do not change the scope of the claims.

[signature]
SPE

2154
Art Unit

Under the Paperwork Reduction Act of 1995, no persons are required to respond to a collection of information unless it displays valid OMB control number.

PETITION TO ACCEPT UNINTENTIONALLY DELAYED PAYMENT OF MAINTENANCE FEE IN AN EXPIRED PATENT (37 CFR 1.378(c))

Patent Number	Issue Date (YYYY-MM-DD)	Application Number	Filing Date (YYYY-MM-DD)	Docket Number (if applicable)
5976174	1999-11-02	08990896	1997-12-15	

CAUTION: Maintenance fee (and surcharge, if any) payment must correctly identify: (1) the patent number and (2) the application number of the actual U.S. application leading to issuance of that patent to ensure the fee(s) is/are associated with the correct patent. 37 CFR 1.366(c) and (d).

SMALL ENTITY
☒ Patentee claims, or has previously claimed, small entity status. See 37 CFR 1.27.

LOSS OF ENTITLEMENT TO SMALL ENTITY STATUS
☐ Patentee is no longer entitled to small entity status. See 37 CFR 1.27(g)

NOT Small Entity		Small Entity	
Fee	Code	Fee	Code
○ 3 ½ year	(1551)	○ 3 ½ year	(2551)
○ 7 ½ year	(1552)	◉ 7 ½ year	(2552)
○ 11 ½ year	(1553)	○ 11 ½ year	(2553)

SURCHARGE
The surcharge required by 37 CFR 1.20(i)(2) (Fee Code 1558) must be paid as a condition of accepting unintentionally delayed payment of the maintenance fee.

MAINTENANCE FEE (37 CFR 1.20(e)-(g))
The appropriate maintenance fee must be submitted with this petition.

STATEMENT
THE UNDERSIGNED CERTIFIES THAT THE DELAY IN PAYMENT OF THE MAINTENANCE FEE TO THIS PATENT WAS UNINTENTIONAL

PETITIONER(S) REQUEST THAT THE DELAYED PAYMENT OF THE MAINTENANCE FEE BE ACCEPTED AND THE PATENT REINSTATED

THIS PORTION MUST BE COMPLETED BY THE SIGNATORY OR SIGNATORIES

37 CFR 1.378(d) states: "Any petition under this section must be signed by an attorney or agent registered to practice before the Patent and Trademark Office, or by the patentee, the assignee, or other party in interest."

I certify, in accordance with 37 CFR 1.4(d)(4) that I am

◉ An attorney or agent registered to practice before the Patent and Trademark Office

○ A sole patentee

○ A joint patentee; I certify that I am authorized to sign this submission on behalf of all the other patentees.

○ A joint patentee; all of whom are signing this e-petition

○ The assignee of record of the entire interest

Patent Practitioner			
A signature of the applicant or representative is required in accordance with 37 CFR 1.33 and 10.18. Please see 37 CFR 1.4(d) for the form of the signature			
Signature	/Nicola A. Pisano/	Date (YYYY-MM-DD)	2009-01-30
Name	Nicola A. Pisano	Registration Number	34408

This collection of information is required by 37 CFR 1.378(c). The information is required to obtain or retain a benefit by the public which is to file (and by the USPTO to process) an application. Confidentiality is governed by 35 U.S.C. 122 and 37 CFR 1.11 and 1.14. This collection is estimated to take 1 hour to complete, including gathering, preparing, and submitting the completed application form to the USPTO. Time will vary depending upon the individual case. Any comments on the amount of time you require to complete this form and/ or suggestions for reducing this burden, should be sent to the Chief Information Officer, U.S. Patent and Trademark Office, U.S. Department of Commerce, P.O. Box 1450, Alexandria, VA 22313-1450. DO NOT SEND FEES OR COMPLETED FORMS TO THIS ADDRESS. **This form can only be used when in conjunction with EFS-Web. If this form is mailed to the USPTO, it may cause delays in reinstating the patent.**

Privacy Act Statement

The Privacy Act of 1974 (P.L. 93-579) requires that you be given certain information in connection with your submission of the attached form related to a patent application or patent. Accordingly, pursuant to the requirements of the Act, please be advised that: (1) the general authority for the collection of this information is 35 U.S.C. 2(b)(2); (2) furnishing of the information solicited is voluntary; and (3) the principal purpose for which the information is used by the U.S. Patent and Trademark Office is to process and/or examine your submission related to a patent application or patent. If you do not furnish the requested information, the U.S. Patent and Trademark Office may not be able to process and/or examine your submission, which may result in termination of proceedings or abandonment of the application or expiration of the patent.

The information provided by you in this form will be subject to the following routine uses:

1. The information on this form will be treated confidentially to the extent allowed under the Freedom of Information Act (5 U.S.C. 552) and the Privacy Act (5 U.S.C. 552a). Records from this system of records may be disclosed to the Department of Justice to determine whether the Freedom of Information Act requires disclosure of these record s.

2. A record from this system of records may be disclosed, as a routine use, in the course of presenting evidence to a court, magistrate, or administrative tribunal, including disclosures to opposing counsel in the course of settlement negotiations.

3. A record in this system of records may be disclosed, as a routine use, to a Member of Congress submitting a request involving an individual, to whom the record pertains, when the individual has requested assistance from the Member with respect to the subject matter of the record.

4. A record in this system of records may be disclosed, as a routine use, to a contractor of the Agency having need for the information in order to perform a contract. Recipients of information shall be required to comply with the requirements of the Privacy Act of 1974, as amended, pursuant to 5 U.S.C. 552a(m).

5. A record related to an International Application filed under the Patent Cooperation Treaty in this system of records may be disclosed, as a routine use, to the International Bureau of the World Intellectual Property Organization, pursuant to the Patent Cooperation Treaty.

6. A record in this system of records may be disclosed, as a routine use, to another federal agency for purposes of National Security review (35 U.S.C. 181) and for review pursuant to the Atomic Energy Act (42 U.S.C. 218(c)).

7. A record from this system of records may be disclosed, as a routine use, to the Administrator, General Services, or his/her designee, during an inspection of records conducted by GSA as part of that agency's responsibility to recommend improvements in records management practices and programs, under authority of 44 U.S.C. 2904 and 2906. Such disclosure shall be made in accordance with the GSA regulations governing inspection of records for this purpose, and any other relevant (i.e., GSA or Commerce) directive. Such disclosure shall not be used to make determinations about individuals.

8. A record from this system of records may be disclosed, as a routine use, to the public after either publication of the application pursuant to 35 U.S.C. 122(b) or issuance of a patent pursuant to 35 U.S.C. 151. Further, a record may be disclosed, subject to the limitations of 37 CFR 1.14, as a routine use, to the public if the record was filed in an application which became abandoned or in which the proceedings were terminated and which application is referenced by either a published application, an application open to public inspections or an issued patent.

9. A record from this system of records may be disclosed, as a routine use, to a Federal, State, or local law enforcement agency, if the USPTO becomes aware of a violation or potential violation of law or regulation.

UNITED STATES PATENT AND TRADEMARK OFFICE

Commissioner for Patents
United States Patent and Trademark Office
P.O. Box 1450
Alexandria, VA 22313-1450
www.uspto.gov

In re Patent No. 5976174
Issue Date: November 2,1999
Application No. 08990896
Filed: December 15,1997
Attorney Docket No. CER-005

:
:DECISION GRANTING PETITION
:UNDER 37 CFR 1.378(c)
:

This is a decision on the electronic petition, filed January 30,2009 ,under 37 CFR 1.378(c) to accept the unintentionally delayed payment of the 7.5 year maintenance fee for the above-identified patent.

The petition is **GRANTED**.

The maintenance fee is accepted, and the above-identified patent reinstated as of January 30,2009 . This decision also constitutes notice that the fee has been accepted. An electronic copy of the petition and this decision has been created as an entry in the Image File Wrapper. Nevertheless, petitioner should print and retain an independent copy.

Telephone inquiries related to this electronic decision should be directed to the Electronic Business Center at 1-866-217-9197.

SPE RESPONSE FOR CERTIFICATE OF CORRECTION

Paper No.: _____

DATE : 01/05/09

TO SPE OF : ART UNIT 1793

SUBJECT : Request for Certificate of Correction for Appl. No.: 08990901 Patent No.: 5895633

Please respond to this request for a certificate of correction within 7 days.

FOR IFW FILES:

Please review the requested changes/corrections as shown in the **COCIN** document(s) in the IFW application image. No new matter should be introduced, nor should the scope or meaning of the claims be changed.

Please complete the response (see below) and forward the completed response to scanning using document code **COCX**.

FOR PAPER FILES:

Please review the requested changes/corrections as shown in the attached certificate of correction. Please complete this form (see below) and forward it with the file to:

Certificates of Correction Branch (C of C)
Randolph Square 9D40-D
Palm Location 7580

You can fax the Directors/SPE response to 571-270-9990

Lamonte Newsome
Certificates of Correction Branch
703-756-1574

Thank You For Your Assistance

The request for issuing the above-identified correction(s) is hereby:
Note your decision on the appropriate box.

- ☒ **Approved** — **All** changes apply.
- ☐ **Approved in Part** — Specify below which changes **do not** apply.
- ☐ **Denied** — State the reasons for denial below.

Comments: _____

UNITED STATES PATENT AND TRADEMARK OFFICE

COMMISSIONER FOR PATENTS
UNITED STATES PATENT AND TRADEMARK OFFICE
WASHINGTON, D.C. 20231
www.uspto.gov

Paper No. 15

SCIENTIFIC-ATLANTA, INC.
INTELLECTUAL PROPERTY DEPARTMENT
5030 SUGARLOAF PARKWAY
LAWRENCEVILLE, GA 30044

COPY MAILED
APR 1 1 2003
OFFICE OF PETITIONS

In re Application of :
Elizabeth A. Smith, et al. :
Application No. 08/990,973 : ON PETITION
Filed: December 15, 1997 :
Attorney Docket No. 01263.59651 :

This is a decision on the petition under 37 CFR 1.137(b), filed March 31, 2003, to revive the above-identified application.

The petition is **GRANTED**.

The above-identified application became abandoned for failure to reply in a timely manner to the non-final Office action mailed July 8, 2002, which set a shortened statutory period for reply of three (3) months. No extensions of time under the provisions of 37 CFR 1.136(a) were obtained. Accordingly, the application became abandoned on October 9, 2002.

An extension of time under 37 CFR 1.136 must be filed prior to the expiration of the maximum extendable period for reply. See In re Application of S., 8 USPQ2d 1630, 1631 (Comm'r Pats. 1988). Since the request for extension of time submitted with the petition on March 31, 2003 was subsequent to the maximum extendable period for reply, this fee is unnecessary and will be credited to petitioner's deposit account no. 19-0761.

Telephone inquiries concerning this decision should be directed to the undersigned at (703) 306-5594.

The application file is being forwarded to Technology Center 2600, Art Unit 2611 for further processing.

Retta Williams

Retta Williams
Petitions Examiner
Office of Petitions
Office of the Deputy Commissioner
for Patent Examination Policy

UNITED STATES DEPARTMENT OF COMMERCE
Patent and Trademark Office
ASSISTANT SECRETARY AND COMMISSIONER OF
PATENTS AND TRADEMARKS
Washington, D.C. 20231

Paper No. 16

COPY MAILED

APR 03 2000

SPECIAL PROGRAMS OFFICE
DAC FOR PATENTS

JAMES G. STAPLES ESQ
A. FINKL & SONS CO
2011 NORTH SOUTH PORT AVENUE
CHICAGO, IL 60614

In re Application of
Algirdas A. Underys
Application No. 08/991,113
Filed: December 16, 1997
Attorney Docket No. FINKL-183-US

ON PETITION

This is a decision on the petition under 37 CFR 1.137(b), filed December 16, 1999, to revive the above-identified application.

The petition is **GRANTED**.

The two-month period for filing an appeal brief in triplicate (accompanied by the fee required by 37 CFR 1.17(c)), runs from the date of this decision.

The above-identified application became abandoned for failure to reply within the meaning of 37 CFR 1.113 in a timely manner to the final Office action mailed May 27, 1999, which set a shortened statutory period for reply of three (3) months. Extensions of time under the provisions of 37 CFR 1.136(a) were obtained. Accordingly, the above-identified application became abandoned on September 27, 1999.

Telephone inquiries concerning this decision should be directed to Wan Laymon at (703) 305-9282.

The application file is being forwarded to Technology Center 1700 for further processing.

Wan Laymon
Wan Laymon
Petitions Examiner
Office of Petitions
Office of the Deputy Assistant Commissioner
for Patent Policy and Projects

Marianne Morgan
Marianne Morgan
Petitions Examiner

UNITED STATES PATENT AND TRADEMARK OFFICE

Commissioner for Patents
United States Patent and Trademark Office
P.O. Box 1450
Alexandria, VA 22313-1450
www.uspto.gov

JAMES G. STAPLES ESQ
A. FINKL & SONS CO
2011 NORTH SOUTH PPORT AVENUE
CHICAGO, IL 60614

COPY MAILED
JAN 19 2010

In re Patent No. 6,972,058 :
Issue Date: December 6, 2005 :
Application No. 08/991,113 : NOTICE
Filed: December 16, 1997 :
Attorney Docket No. FINKL-183-US :

This is a notice regarding your request for acceptance of a fee deficiency submission under 37 CFR 1.28. On September 1, 1998, the Court of Appeals for the Federal Circuit held that 37 CFR 1.28(c) is the sole provision governing the time for correction of the erroneous payment of the issue fee as a small entity. **See DH Technology v. Synergystex International, Inc. 154 F.3d 1333, 47 USPQ2d 1865 (Fed. Cir. Sept. 1, 1998).**

The Office no longer investigates or rejects original or reissue applications under 37 CFR 1.56. **1098 Off. Gaz. Pat. Office 502 (January 3, 1989)**. Therefore, nothing in this Notice is intended to imply that an investigation was done.

Your fee deficiency submission under 37 CFR 1.28 is hereby **ACCEPTED**.

This application is no longer entitled to small entity status. Accordingly, all future fees paid in this application must be paid at the large entity rate.

Inquiries related to this communication should be directed to the undersigned at (571) 272-1642.

/AMW/
April M. Wise
Petitions Examiner
Office of Petitions

UNITED STATES DEPARTMENT OF COMMERCE
Patent and Trademark Office
ASSISTANT SECRETARY AND COMMISSIONER OF
PATENTS AND TRADEMARKS
Washington, D.C. 20231

Paper No. 13

RICHARD T. LYON
LYON HARR & DEFRANK
300 ESPLANADE DRIVE
SUITE 800
OXNARD, CA 93030

COPY MAILED

NOV 0 9 2000

OFFICE OF PETITIONS
A/C PATENTS

In re Application of
Edward W. Holland et al.
Application No. 08/992,504
Filed: December 17, 1997
Attorney Docket No.

ON PETITION

This is a decision on the petition under 37 CFR 1.137(b), filed October 25, 2000, to revive the above-identified application.

The petition is **GRANTED**.

The above-identified application became abandoned for failure to reply in a timely manner to the non-final Office action mailed January 20, 2000, which set a shortened statutory period for reply of three (3) months. One month extension of time under the provisions of 37 CFR 1.136(a) was obtained. Accordingly, the above-identified application became abandoned on May 21, 2000.

An extension of time under 37 CFR 1.136 must be filed prior to the expiration of the maximum extendable period for reply. See In re Application of S., 8 USPQ2d 1630, 1631 (Comm'r Pats. 1988). Accordingly, since the $435 (three month) extension of time submitted on August 25, 2000 was subsequent to the maximum extendable period for reply, petitioner may request a refund. On June 26, 2000, the office received $165. The office has applied $55 toward (one month) extension of time, therefore; the petitioner may request an additional $110 refund from this transaction. The petitioner may request a total refund of $545 by writing to the Office of Finance, Refund Section. A copy of this decision should accompany petitioner's request.

Telephone inquiries concerning this decision should be directed to Irvin Dingle at (703) 306-5684.

The application file is being forwarded to Technology Center 3600.

Irvin Dingle
Petitions Examiner
Office of Petitions
Office of the Deputy Commissioner
for Patent Examination Policy

UNITED STATES PATENT AND TRADEMARK OFFICE

Commissioner for Patents
United States Patent and Trademark Office
P.O. Box 1450
Alexandria, VA 22313-1450
www.uspto.gov

Paper No. 43

BELL BOYD & LLOYD LLC
P O BOX 1135
CHICAGO, IL 60690-1135

COPY MAILED
JUL 0 8 2004
OFFICE OF PETITIONS

In re Application of
Kazuhiko Hachiya et al
Application No. 08/992,770
Filed: December 17, 1997
Attorney Docket No. SONY-6900

DECISION ON PETITION
UNDER 37 CFR 1.313(c)(2)

This is a decision on the petition under 37 CFR 1.313(c)(2), filed July 6, 2004, to withdraw the above-identified application from issue after payment of the issue fee.

The petition is **DISMISSED as moot**.

Unfortunately, the instant petition was filed too late to avert the issuance of the above-identified application into a patent.

Petitioner's attention is directed to 37 CFR 1.313(d), which states:

> A petition under this section will not be effective to withdraw the application from issue unless it is actually received and granted by the appropriate officials **before the date of issue**.

Since this application has issued, the concurrently filed request for continued examination (RCE) is improper and will not be processed. No fee has been assessed to either the RCE or the petition to withdraw from issue.

The Information Disclosure Statement has been placed in the file of the above-identified application without further consideration. See 37 CFR 1.97(i).

Telephone inquiries should be directed to the undersigned at (703) 305-8680.

Frances Hicks

Frances Hicks
Petitions Examiner
Office of Petitions
Office of the Deputy Commissioner
for Patent Examination Policy

UNITED STATES PATENT AND TRADEMARK OFFICE

Commissioner for Patents
United States Patent and Trademark Office
Washington, D.C. 20231
www.uspto.gov

Paper No. 9

MAILED

JAN 0 9 2001

Technology Center 2600

MORGAN & FINNEGAN
345 PARK AVENUE
NEW YORK , NY 10154

In re Application of	)	
Carl H. Meyerhoffer, et al.	)	DECISION
Application No. 08/993,271	)	ON
Filed: December 18, 1997	)	PETITION
For: NETWORK INTERFACE DEVICE FOR	)	
HIGH SPEED DATA LINES	)	

This is in response to the Petition Pursuant to 37 CFR 1.137, MPEP 711.03(c), filed June 30, 2000, which is treated as a petition to withdraw the holding of abandonment for the above-identified application.

This application was held abandoned for failure to timely pay the issue fee due within three months from the mail date of November 22, 1999, of the Notice of Allowance and Issue fee Due. A Notice of Abandonment was mailed June 12, 2000.

Petitioner asserts that the Notice of Allowance was never received. In support of the petition, petitioner submits a copy of the docket records where the action would have been docketed had it been received and a declaration from Shirley Hopkins, a docketing manager, stating that the Notice of Allowance was never received.

In the absence of any irregularity in the mailing of an Office action, there is a strong presumption that the office action was properly mailed to practitioner at the address of record. This presumption may be overcome by a showing that the Office action was not in fact received. The showing required to establish the failure to receive an Office communication must include a statement from the practitioner stating that the Office communication was not received by the practitioner and attesting to the fact that a search of the file jacket and docket records indicates that the Office communication was not received. A copy of the docket record where the non-received Office communication would have been entered had it been received and docketed must be attached to and referenced in practitioner's statement. See "Withdrawing the Holding of Abandonment When Office Actions Are Not Received" 1156 Official Gazette 53 (November 16, 1993) and M.P.E.P. § 711.03(c). The showing outlined above may not be sufficient if there are circumstances that point to a conclusion that the Office communication may have been lost after receipt rather than a conclusion that the Office communication was lost in the mail.

A review of the record indicates that the Notice of Allowance of November 22, 1999, was properly mailed to the practitioner of record at the correspondence address of record at the time of mailing. Thus, there was no irregularity in mailing the Notice of Allowance on the part of the Patent and Trademark Office.

The petitioner has not made a sufficient showing of nonreceipt of the Notice of Allowance in accordance with the requirements set forth above. The petition does not include: (1) a statement ***from the practitioner*** stating that the Notice of Allowance was not received by the practitioner and attesting to the fact that a search of the file jacket and docket records indicates that the Notice of Allowance was not received; and (2) a reference to the docket records in the practitioner's statement.

The petition is **DENIED.**

Should petitioner desire reconsideration, he or she should supplement this petition with a statement and docket records as outlined above.

Any request for reconsideration must be filed within **TWO MONTHS** of the date of this decision.

The application file will be held in Technology Center 2700 to await a renewed petition. If no renewed petition is filed within two months of the mail date of this decision, the application file will be forwarded to the Office of Petitions for consideration of the alternative petition under 37 CFR 1.137.

James L. Dwyer, Director
Technology Center 2700
Communications & Information Processing

UNITED STATES PATENT AND TRADEMARK OFFICE

COMMISSIONER FOR PATENTS
UNITED STATES PATENT AND TRADEMARK OFFICE
WASHINGTON, DC 20231
www.uspto.gov

Paper No. 11

MAILED
APR 05 2001
Technology Center 2600

MORGAN & FINNEGAN
345 PARK AVENUE
NEW YORK, NY 10154

In re Application of
MEYERHOEFER, CARL H.
Application No. 08/993,271
Filed: December 18, 1997
Attorney Docket No. 0720-4058

ON PETITION

This is a decision on the renewed petition filed February 26, 2001 requesting withdrawal of the holding of abandonment of the above-identified application.

The petition is **granted.**

This application was held abandoned for failure to timely pay the issue fee due within three months from the mail date of November 22, 1999, of the Notice of Allowance and Issue Fee Due. A Notice of Abandonment was mailed on June 12, 2000.

On June 30, 2000, Petitioner filed a petition to withdraw the holding of abandonment. That petition was denied in a decision dated January 9, 2001 for failure to establish a sufficient showing of non-receipt of the notice as required under the Manual of Patent Examination Procedure §711.03(c). Specifically, it was noted that the petition lacked 1) a statement from the practitioner stating that the Notice of Allowance was not received by the practitioner, that a search of the file jacket and docket records indicates non-receipt of the Notice, and 2) a reference to the docket records in the practitioner's statement. Petitioner was given a two month period for replying to the decision.

On February 26, 2001, Petitioner timely responded with this renewed petition, which properly addresses the deficiencies noted in the January 9, 2001 decision.

The showing offered now complies with the requirements of a successful petition to withdraw the holding of abandonment due to non-receipt of an office action as set forth in the Manual of Patent Examination Procedure §711.03(c). Therefore, the Notice of Abandonment is hereby vacated and the holding of abandonment withdrawn. Since a Notice of Allowability was originally mailed with the Notice of Allowance it is presumed that this paper was also not received.

A written request for a refund of the $130.00 petition fee accompanied this petition. The $130 fee has been refunded.

Due to the time lapse between the original mailing of the Notice of Allowance and the present, the file is being forwarded to the examiner for further consideration and prior art search as necessary. If the application file remains in condition for allowance, it will then be forwarded to the Technology Center's technical support staff for mailing of a new Notice of Allowance and Notice of Allowability.

James L. Dwyer, Director
Technology Center 2600
Communications

UNITED STATES DEPARTMENT OF COMMERCE
Patent and Trademark Office
ASSISTANT SECRETARY AND COMMISSIONER OF
PATENTS AND TRADEMARKS
Washington, D.C. 20231

Paper No. 8

COPY MAILED

MAY 03 2000

SPECIAL PROGRAMS OFFICE
DAC FOR PATENTS

ROBERT C COLWELL
TOWNSEND AND TOWNSEND AND CREW
TWO EMBARCADERO CENTER 8TH FLOOR
SAN FRANCISCO, CA 94111

In re Application of
Earle W. Jennings III
Application No. 08/993,442
Filed: December 18, 1997
Attorney Docket No. 00939A-040310US

ON PETITION

This is a decision on the petition under 37 CFR 1.137(b), filed March 27, 2000, to revive the above-identified application.

The petition is **DISMISSED**.

Any request for reconsideration of this decision must be submitted within TWO (2) MONTHS from the mail date of this decision. Extensions of time under 37 CFR 1.136(a) are permitted. The reconsideration request should include a cover letter entitled "Renewed Petition under 37 CFR 1.137(b)." This is **not** final agency action within the meaning of 5 U.S.C. § 704.

The above-identified application became abandoned for failure to reply in a timely manner to the non-final Office action mailed May 13, 1999, which set a shortened statutory period for reply of three (3) months. No extensions of time under the provisions of 37 CFR 1.136(a) were obtained. Accordingly, the above-identified application became abandoned on August 14, 1999.

A grantable petition under 37 CFR 1.137(b)[1] must be accompanied by: (1) the required reply,[2] unless previously filed; (2) the petition fee as set forth in 37 CFR 1.17(m); (3) a statement that the entire delay in filing the required reply from the due date for the reply until the filing of a grantable petition pursuant to 37 CFR 1.137(b) was unintentional; and (4) any terminal disclaimer (and fee as set forth in 37 CFR 1.20(d)) required by 37 CFR 1.137(c). Where there is a question as to whether either the abandonment or the delay in filing a petition under 37 CFR 1.137 was unintentional, the Commissioner may require additional information. See MPEP 711.03(c)(III)(C) and (D). The instant petition lack(s) item(s) (1).

A petition to revive cannot be granted where there is an outstanding requirement. In the instant case, there was no response to the outstanding official action submitted. Accordingly, the petition to revive cannot be granted until such time as the outstanding response requirement is received.

Further correspondence with respect to this matter should be addressed as follows:

By mail: Assistant Commissioner for Patents
Box DAC
Washington, D.C. 20231

By facsimile: (703) 308-6916
Attn: Office of Petitions

By hand: Office of Petitions
2201 South Clark Place
Crystal Plaza 4, Suite 3C23
Arlington, VA 22202

---

[1] As amended effective December 1, 1997. See Changes to Patent Practice and Procedure; Final Rule Notice, 62 Fed. Reg. 53131, 53194-95 (October 10, 1997), 1203 Off. Gaz. Pat. Office 63, 119-20 (October 21, 1997).

[2] In a nonprovisional application abandoned for failure to prosecute, the required reply may be met by the filing of a continuing application. In an application or patent, abandoned or lapsed for failure to pay the issue fee or any portion thereof, the required reply must be the payment of the issue fee or any outstanding balance thereof.

Telephone inquiries concerning this decision should be directed to Wan Laymon at (703) 305-9282.

Wan Laymon
Wan Laymon
Petitions Examiner
Office of Petitions
Office of the Deputy Assistant Commissioner
for Patent Policy and Projects

Marianne Morgan
Marianne Morgan
Petitions Examiner

#12

UNITED STATES PATENT AND TRADEMARK OFFICE

COMMISSIONER FOR PATENTS
UNITED STATES PATENT AND TRADEMARK OFFICE
WASHINGTON, D.C. 20231
www.uspto.gov

Paper No. 12

COPY MAILED

SEP 1 1 2000

SPECIAL PROGRAMS OFFICE
DAC FOR PATENTS

KIM KANZAKI
TOWNSEND AND TOWNSEND AND CREW LLP
TWO EMBARCADERO CENTER
8TH FLOOR
SAN FRANCISCO, CA 94111-3834

In re Application of
Earle W. Jennings III
Application No. 08/993,442
Filed: December 18, 1997
Attorney Docket No. 939A-040310

ON PETITION

This is a decision on the renewed petition under 37 CFR 1.137(b), filed August 9, 2000 and with a certificate of mailing date of August 3, 2000, to revive the above-identified application.

The petition is **GRANTED**.

The above-identified application became abandoned for failure to reply in a timely manner to the nonfinal Office Action mailed May 13, 1999. Accordingly, this application became abandoned August 14, 1999. A Notice of Abandonment was mailed December 17, 1999. On March 27, 2000, petitioner filed a petition to revive which was dismissed in a May 3, 2000 decision for failure to submit the required reply. Petitioner obtained a one month extension of time to reply to the decision.

37 CFR 1.137(b)(3) requires a statement that the entire delay in filing the required reply from the due date for the reply until the filing of a grantable petition pursuant to 37 CFR 1.137(b) was unintentional. The renewed petition fails to contain this statement. However, the original petition contains a similar statement which the Office will construe as applying to the renewed petition. Since the statement contained in the petition varies from the language required by 37 CFR 1.137(b)(3), the statement contained in the petition is being construed as the statement required by 37 CFR 1.137(b)(3) and petitioner must notify the Office if this is **not** a correct interpretation of the statement contained in the petition.

The Amendment, filed August 9, 2000 and with a certificate of mailing date of August 3, 2000, is acknowledged.

This application is being forwarded to Technology Center 2700.

Telephone inquiries should be directed to Petitions Attorney Laurie Mayes at (703) 308-3145.

for D Wood

Beverly M. Flanagan
Supervisory Petitions Examiner
Office of Petitions
Office of the Deputy Commissioner
for Patent Examination Policy

PTO/SB/66 (03-09)
Approved for use through 03/31/2012. OMB 0651-0016
U.S. Patent and Trademark Office: U.S. DEPARTMENT OF COMMERCE
Under the Paperwork Reduction Act of 1995, no persons are required to respond to a collection of information unless it displays valid OMB control number.

PETITION TO ACCEPT UNINTENTIONALLY DELAYED PAYMENT OF MAINTENANCE FEE IN AN EXPIRED PATENT (37 CFR 1.378(c))

Patent Number	Issue Date (YYYY-MM-DD)	Application Number	Filing Date (YYYY-MM-DD)	Docket Number (if applicable)
6218880	2001-04-17	08993519	1997-12-18	133757.28501

CAUTION: Maintenance fee (and surcharge, if any) payment must correctly identify: (1) the patent number and (2) the application number of the actual U.S. application leading to issuance of that patent to ensure the fee(s) is/are associated with the correct patent. 37 CFR 1.366(c) and (d).

SMALL ENTITY
☐ Patentee claims, or has previously claimed, small entity status. See 37 CFR 1.27.

LOSS OF ENTITLEMENT TO SMALL ENTITY STATUS
☐ Patentee is no longer entitled to small entity status. See 37 CFR 1.27(g)

NOT Small Entity		Small Entity	
Fee	Code	Fee	Code
○ 3 ½ year	(1551)	○ 3 ½ year	(2551)
◉ 7 ½ year	(1552)	○ 7 ½ year	(2552)
○ 11 ½ year	(1553)	○ 11 ½ year	(2553)

SURCHARGE
The surcharge required by 37 CFR 1.20(i)(2) (Fee Code 1558) must be paid as a condition of accepting unintentionally delayed payment of the maintenance fee.

MAINTENANCE FEE (37 CFR 1.20(e)-(g))
The appropriate maintenance fee must be submitted with this petition.

STATEMENT
THE UNDERSIGNED CERTIFIES THAT THE DELAY IN PAYMENT OF THE MAINTENANCE FEE TO THIS PATENT WAS UNINTENTIONAL

PETITIONER(S) REQUEST THAT THE DELAYED PAYMENT OF THE MAINTENANCE FEE BE ACCEPTED AND THE PATENT REINSTATED

THIS PORTION MUST BE COMPLETED BY THE SIGNATORY OR SIGNATORIES

37 CFR 1.378(d) states: "Any petition under this section must be signed by an attorney or agent registered to practice before the Patent and Trademark Office, or by the patentee, the assignee, or other party in interest."

I certify, in accordance with 37 CFR 1.4(d)(4) that I am

◉ An attorney or agent registered to practice before the Patent and Trademark Office

○ A sole patentee

○ A joint patentee; I certify that I am authorized to sign this submission on behalf of all the other patentees.

○ A joint patentee; all of whom are signing this e-petition

○ The assignee of record of the entire interest

Patent Practitioner			
A signature of the applicant or representative is required in accordance with 37 CFR 1.33 and 10.18. Please see 37 CFR 1.4(d) for the form of the signature			
Signature	/Joshua R. Slavitt, Reg. No. 40,816/	Date (YYYY-MM-DD)	2009-06-24
Name	Joshua R. Slavitt	Registration Number	40816

This collection of information is required by 37 CFR 1.378(c). The information is required to obtain or retain a benefit by the public which is to file (and by the USPTO to process) an application. Confidentiality is governed by 35 U.S.C. 122 and 37 CFR 1.11 and 1.14. This collection is estimated to take 1 hour to complete, including gathering, preparing, and submitting the completed application form to the USPTO. Time will vary depending upon the individual case. Any comments on the amount of time you require to complete this form and/ or suggestions for reducing this burden, should be sent to the Chief Information Officer, U.S. Patent and Trademark Office, U.S. Department of Commerce, P.O. Box 1450, Alexandria, VA 22313-1450. DO NOT SEND FEES OR COMPLETED FORMS TO THIS ADDRESS. **This form can only be used when in conjunction with EFS-Web. If this form is mailed to the USPTO, it may cause delays in reinstating the patent.**

Privacy Act Statement

The Privacy Act of 1974 (P.L. 93-579) requires that you be given certain information in connection with your submission of the attached form related to a patent application or patent. Accordingly, pursuant to the requirements of the Act, please be advised that: (1) the general authority for the collection of this information is 35 U.S.C. 2(b)(2); (2) furnishing of the information solicited is voluntary; and (3) the principal purpose for which the information is used by the U.S. Patent and Trademark Office is to process and/or examine your submission related to a patent application or patent. If you do not furnish the requested information, the U.S. Patent and Trademark Office may not be able to process and/or examine your submission, which may result in termination of proceedings or abandonment of the application or expiration of the patent.

The information provided by you in this form will be subject to the following routine uses:

1. The information on this form will be treated confidentially to the extent allowed under the Freedom of Information Act (5 U.S.C. 552) and the Privacy Act (5 U.S.C. 552a). Records from this system of records may be disclosed to the Department of Justice to determine whether the Freedom of Information Act requires disclosure of these records.

2. A record from this system of records may be disclosed, as a routine use, in the course of presenting evidence to a court, magistrate, or administrative tribunal, including disclosures to opposing counsel in the course of settlement negotiations.

3. A record in this system of records may be disclosed, as a routine use, to a Member of Congress submitting a request involving an individual, to whom the record pertains, when the individual has requested assistance from the Member with respect to the subject matter of the record.

4. A record in this system of records may be disclosed, as a routine use, to a contractor of the Agency having need for the information in order to perform a contract. Recipients of information shall be required to comply with the requirements of the Privacy Act of 1974, as amended, pursuant to 5 U.S.C. 552a(m).

5. A record related to an International Application filed under the Patent Cooperation Treaty in this system of records may be disclosed, as a routine use, to the International Bureau of the World Intellectual Property Organization, pursuant to the Patent Cooperation Treaty.

6. A record in this system of records may be disclosed, as a routine use, to another federal agency for purposes of National Security review (35 U.S.C. 181) and for review pursuant to the Atomic Energy Act (42 U.S.C. 218(c)).

7. A record from this system of records may be disclosed, as a routine use, to the Administrator, General Services, or his/her designee, during an inspection of records conducted by GSA as part of that agency's responsibility to recommend improvements in records management practices and programs, under authority of 44 U.S.C. 2904 and 2906. Such disclosure shall be made in accordance with the GSA regulations governing inspection of records for this purpose, and any other relevant (i.e., GSA or Commerce) directive. Such disclosure shall not be used to make determinations about individuals.

8. A record from this system of records may be disclosed, as a routine use, to the public after either publication of the application pursuant to 35 U.S.C. 122(b) or issuance of a patent pursuant to 35 U.S.C. 151. Further, a record may be disclosed, subject to the limitations of 37 CFR 1.14, as a routine use, to the public if the record was filed in an application which became abandoned or in which the proceedings were terminated and which application is referenced by either a published application, an application open to public inspections or an issued patent.

9. A record from this system of records may be disclosed, as a routine use, to a Federal, State, or local law enforcement agency, if the USPTO becomes aware of a violation or potential violation of law or regulation.

UNITED STATES PATENT AND TRADEMARK OFFICE

Commissioner for Patents
United States Patent and Trademark Office
P.O. Box 1450
Alexandria, VA 22313-1450
www.uspto.gov

In re Patent No. 6218880
Issue Date: April 17,2001
Application No. 08993519
Filed: December 18,1997
Attorney Docket No. 1033-195

:
:DECISION GRANTING PETITION
:UNDER 37 CFR 1.378(c)
:

This is a decision on the electronic petition, filed June 24,2009 ,under 37 CFR 1.378(c) to accept the unintentionally delayed payment of the 7.5 year maintenance fee for the above-identified patent.

The petition is **GRANTED**.

The maintenance fee is accepted, and the above-identified patent reinstated as of June 24,2009 . This decision also constitutes notice that the fee has been accepted. An electronic copy of the petition and this decision has been created as an entry in the Image File Wrapper. Nevertheless, petitioner should print and retain an independent copy.

Telephone inquiries related to this electronic decision should be directed to the Electronic Business Center at 1-866-217-9197.

UNITED STATES PATENT AND TRADEMARK OFFICE

Commissioner for Patents
United States Patent and Trademark Office
P.O. Box 1450
Alexandria, VA 22313-1450
www.uspto.gov

Paper No. 50

ANTOINETTE F. KONSKI
THREE EMBARCADERO CENTER, SUITE 1800
SAN FRANCISCO, CA 94111-4067

COPY MAILED
MAY 17 2004
OFFICE OF PETITIONS

In re Application of :
David J. Schanzlin et al :
Application No. 08/993,696 :
Filed: December 18, 1997 :
Attorney Docket No. 251692002821 :

ON PETITION

This is a decision on the petition under 37 CFR 1.137(b), filed April 21, 2004, to revive the above-identified application.

The petition is **GRANTED**.

The above-identified application became abandoned for failure to reply in a timely manner to the non-final Office action mailed October 20, 2003, which set a shortened statutory period for reply of three (3) months. No extensions of time under the provisions of 37 CFR 1.136(a) were obtained. Accordingly, the above-identified application became abandoned on January 21, 2004.

Telephone inquiries concerning this decision should be directed to Irvin Dingle at (703) 306-5684.

The application file is being forwarded to the Publishing Division.

Irvin Dingle
Petitions Examiner
Office of Petitions
Office of the Deputy Commissioner
for Patent Examination Policy

SPE RESPONSE FOR CERTIFICATE OF CORRECTION

Paper No.: _____

DATE : July 22, 2009

TO SPE OF : ART UNIT 3723

SUBJECT : Request for Certificate of Correction for Appl. No.: 08993893-ser.no.RE38878

Please respond to this request for a certificate of correction within 7 days.

FOR IFW FILES:

Please review the requested changes/corrections as shown in the **COCIN** document(s) in the IFW application image. No new matter should be introduced, nor should the scope or meaning of the claims be changed.

Please complete the response (see below) and forward the completed response to scanning using document code **COCX**.

FOR PAPER FILES:

Please review the requested changes/corrections as shown in the attached certificate of correction. Please complete this form (see below) and forward it with the file to:

Certificates of Correction Branch (CofC)
South Tower - 9A22
Palm Location 7580

Magdalene Talley
Certificates of Correction Branch
703-308-9390 ext. 120

Thank You For Your Assistance

The request for issuing the above-identified correction(s) is hereby:

Note your decision on the appropriate box.

- ☑ **Approved** — **All** changes apply.
- ☐ **Approved in Part** — Specify below which changes **do not** apply.
- ☐ **Denied** — State the reasons for denial below.

Comments: _____

Monica S Carter
SPE

3727
Art Unit

UNITED STATES PATENT AND TRADEMARK OFFICE

Commissioner for Patents
United States Patent and Trademark Office
Washington, D.C. 20231
www.uspto.gov

Paper No. 32

Bingham McCutchen
Three Embarcadero Center, Suite 1800
San Francisco, CA 94111

COPY MAILED

MAY 1 3 2003

OFFICE OF PETITIONS

In re Application of :
Thomas A. Silvestrini :
Application No. 08/993,946 :
Filed: December 18, 1997 :
Attorney Docket No. AT 2036.00 :

ON PETITION

This is a decision on the petition under 37 CFR 1.137(b), filed March 7, 2003, to revive the above-identified application.

The petition is **GRANTED**.

The above-identified application became abandoned as a result of petitioner's failure to file an appeal brief (and fee required by 37 CFR 1.17(c)) within the time period provided in 37 CFR 1.192(a). An Amendment and a five-month extension of time were filed on January 27, 2002. As an appeal brief (and appeal brief fee) was not filed within two (2) months of the Notice of Appeal filed July 1, 2002 (certificate of mailing June 18, 2002), the appeal was dismissed and the proceedings as to the rejected claims were terminated. See 37 CFR 1.192(b) & 1.197(c). As no claim was allowed, the-above-identified application became abandoned on January 28, 2002. See MPEP 1215.04.

Telephone inquiries concerning this decision should be directed to Latrice Bond at (703) 308-6911.

The application file is being forwarded to Technology Center AU 3738 for processing the Request for Continued Examination under 37 CFR 1.114 filed with the instant petition.

Latrice Bond

Latrice Bond
Paralegal Specialist
Office of Petitions
Office of the Deputy Commissioner
for Patent Examination Policy

FEB 1 9 2008

UNITED STATES PATENT AND TRADEMARK OFFICE

Commissioner for Patents
United States Patent and Trademark Office
P.O. Box 1450
Alexandria, VA 22313-1450
www.uspto.gov

FEB 1 9 2008

DORAN PACE
PATENT ATTORNEY
P.O. BOX 142950
GAINSVILLE, FL 32614-2950

In re Patent No. 6,294,165 ANDREW MICHAEL LINDSAY LEVER et al

Issue Date: September 25, 2001
Appl No.: 08/994,001
Filed: December 18, 1997
For: Correction of Inventorship

DECISION GRANTING PETITION
37 CFR 1.324

This is a decision on the petition filed February 12, 2008 , to correct inventorship under 37 CFR 1.324. The petition has complied with all the requirements under 37 CFR 1.324.

The petition is **GRANTED**.

The patented file is being forwarded to Certificate of Corrections Branch for issuance of a certificate naming only the actual inventor or inventors.

Jean F Vollano

Jean F. Vollano
Quality Assurance Specialist
Technology Center 1600

UNITED STATES PATENT AND TRADEMARK OFFICE

Commissioner for Patents
United States Patent and Trademark Office
P.O. Box 1450
Alexandria, VA 22313-1450
www.uspto.gov

FEB 19 2008

DATE: February 14, 2008
TO: Certificates of Correction Branch
FROM: Jean F. Vollano
Technology Center 1600
SUBJECT: REQUEST FOR CERTIFICATE OF CORRECTION

Please issue a Certificate of Correction in U. S. Letters Patent No. US 6,294,165 as specified on the attached Certificate.

Jean F Vollano

Jean F. Vollano
Technology Center 1600

FEB 1 9 2008

UNITED STATES PATENT AND TRADEMARK OFFICE

CERTIFICATE

Patent No. US 6,294,165
Patented: September 25, 2001

On petition requesting issuance of a certificate for correction of inventorship pursuant to 35 U.S.C. 256, it has been found that the above identified patent, through error and without deceptive intent, improperly sets forth the inventorship. Accordingly, it is hereby certified that the correct inventorship of this patent is:

Andrew Michael Lindsay Lever
Jennifer Richardson

Jean F Vollano

Jean F. Vollano
Quality Assurance Specialist
Technology Center 1600

UNITED STATES DEPARTMENT OF COMMERCE
Patent and Trademark Office
ASSISTANT SECRETARY OF COMMERCE AND
COMMISSIONER OF PATENTS AND TRADEMARKS
Washington, DC 2023

May 1, 2003

Susan S. Jackson
Clariant Corporation
4331 Chesapeake Drive
Charlotte, NC 28216

In re application of:
Schimmel et al DECISION ON PETITION
Serial No.: 08/994,479
Filed: December 19, 1997
For: PULVERULENT LAUNDRY AND CLEANING
DETERGENTS INGREDIENT

This is a decision on the petition received on January 30, 2001, to withdraw the holding of abandonment in the above-identified application.

The above-identified application became abandoned for failure to reply within the meaning of 37 C.F.R. 1.113 in timely manner to the Notice to File Missing Parts of Application mailed March 30, 1998. Which set a shortened statutory period for reply of two (2) months. Accordingly, this application became abandoned May 31, 1998. The Notice of Abandonment was mailed March 31, 1999.

On January 30, 2001, the office received a communication from attorney of record. Enclosed was an acknowledgment that the attorney never received the Notice to File Missing Parts mailed March 30, 1998.

The evidence submitted is sufficient to establish that the petitioners never received the Notice to File Missing Parts mailed March 30, 1998.

The petition is hereby GRANTED.

A New Notice to File Missing Parts is enclosed with this Decision setting forth a new response period of two months from the date of the notice.

The office regrets any inconvenience this may have caused the client.

Telephone inquiries concerning this matter may be directed to Doshie E. Day at (703) 308-3640.

Doshie Day

Doshie E. Day
Program Management Assistant
Office Initial Patent Examination

UNITED STATES PATENT AND TRADEMARK OFFICE

Commissioner for Patents
United States Patent and Trademark Office
P.O. Box 1450
Alexandria, VA 22313-1450
www.uspto.gov

Date : 10/24/07

Patent No. : 7256169 B2
Ser. No. : 08/994,479
Inventor(s) : SCHIMMEL, GUNTHER
Issued : 08/14/07
Title : **PULVERULENT LAUNDRY AND CLEANING DETERGENT INGREDIENT CONSISTING OF POLYCARBOSYLATE AND SILICATE**
Docket No. : HOE96/HO15J

Re: Request for Certificate of Correction

Consideration has been given your request for the issuance of a certificate of correction for the above-identified patent under the provisions of Rule(s) 1.322 and/or 1.323.

Assignees' names and addresses (assignment data) printed in a patent, are based *solely* on information supplied in the appropriate space for identifying the assignment data, i.e., item 3 of the Issue Fee Transmittal Form PTOL-85B. Granting of a request under 37 CFR 3.81(b) is required to correct applicant's error providing ***incorrect or erroneous*** assignment data, *before* issuance of a Certificate of Correction, under 37 CFR 1.323 *(see Manual of Patent Examining Procedures (M.P.E.P) Chp.1400, sect. 1481).* This procedure is required *at any time after the issue fee is paid*, including after issuance of the patent.

In view of the foregoing, your request, in this mater, is hereby denied.

A request to correct the Assignee under 37 CFR 3.81(b) should include:

A. **the processing fee set forth in 37 CFR 1.117(h) (currently $130);**
B. a statement that the failure to include the correct assignee name on the PTOL-85B was inadvertent; and
C. a copy of the Notice of Recordation of Assignment Document, reflecting the reel and frame number where the assignment(s) is recorded and/or reflecting proof of *the date* the assignment was submitted for recordation.

In the Request, Applicant(s) may request that the file be forwarded to Certificates of Correction Branch, for issuance of a Certificate of Correction, if the Request is granted.

Any request under 37 CFR 3.81(b) should be directed to the following address or facsimile number:

By mail: Mail Stop PETITIONS

Commissioner for Patents
Post Office Box 1450
Alexandria, VA 22313-1450

By hand: Customer Service Window
Mail Stop Petitions
Randolph Building
401 Dulany Street
Alexandria, VA 22314

By fax: (703) 872-9306
ATTN: Office of Petitions

If a fee (currently $100) was previously submitted for consideration of a Request for Certificate of Correction, under CFR 1.323, to correct assignment data, no additional fee is required.

Lamonte M. Newsome

Lamonte M. Newsome
For Cecelia Newman
Decisions & Certificates
of Correction Branch
(703) 308-9390 #112 or (703) 308-8309

CLARIANT CORPORATION
INDUSTRIAL PROPERTY DEPARTMENT
4331 CHESAPEAKE DRIVE
CHARLOTTE NC 28216

LMN

UNITED STATES PATENT AND TRADEMARK OFFICE

Commissioner for Patents
United States Patent and Trademark Office
P.O. Box 1450
Alexandria, VA 22313-1450
www.uspto.gov

CLARIANT CORPORATION
INDUSTRIAL PROPERTY DEPARTMENT
4331 CHESAPEAKE DRIVE
CHARLOTTE NC 28216

COPY MAILED

OCT 17 2008

OFFICE OF PETITIONS

In re Patent No. 7,256,169	:	
Issued: August 14, 2007	:	
Application No. 08/994,479	:	ON PETITION
Filed: January 30, 2001	:	
Attorney Docket No. HOE96/HO15J	:	

This is a decision on the requests filed September 25, 2007 and November 13, 2007, which are being treated as a request under 37 CFR 3.81(b)[1] to add the second assignee's name to the issued patent.

The request is **DISMISSED**.

37 CFR 3.81(a) permits the patent to issue to the assignee, provided that, at the time the issue fee is paid, the name of an assignee is provided. 37 CFR 3.81(b) permits the patent to issue in the name of an assignee if the assignment was submitted after payment of the issue fee but ***prior to issuance of a patent***. Patent and Trademark Office assignment records disclose that an assignment to "Stockhausen GmbH & Co. KG" was recorded on September 7, 2007, after the date of issuance of this patent.

Accordingly, since the assignment was not submitted for recordation until after issuance of this patent, issuance of a certificate of correction would not be proper. *See* MPEP Section 307.

Inquiries concerning this decision should be directed to the undersigned at (571) 272-3206.

Liana Walsh
Petitions Examiner
Office of Petitions

[1] *See* Official Gazette of June 22, 2004

UNITED STATES PATENT AND TRADEMARK OFFICE

Commissioner for Patents
United States Patent and Trademark Office
P.O. Box 1450
Alexandria, VA 22313-1450
www.uspto.gov

Date Mailed : 10/21/08

Patent No. : 7256169 B2
Patent Issued : 08/17/07
Docket No. : **HOE96/HO15J**

Re: Request for Certificate of Correction

Consideration has been given your request for the issuance of a certificate of correction for the above-identified patent under the provisions of Rule(s) 1.322.

Respecting the alleged errors in the documents filed on 11/13/07; please see attachment. **"Therefore, no correction(s) is in order here under United States Codes (U.S.C.) 254 and the Code of Federal Regulation (C.F.R.) 1322."**

In view of the foregoing, your request in this matter is hereby denied.

Lamonte M. Newsome
For Mary Diggs, Supervisor
Decisions & Certificates
Of Correction Branch
(703) 305-8309 or (703)-308-9390 #112

CLARIANT CORPORATION
INDUSTRIAL PROPERTY DEPARTMENT
4331 CHESAPEAKE DRIVE
CHARLOTTE NC 28216

LMN

UNITED STATES PATENT AND TRADEMARK OFFICE

Commissioner for Patents
United States Patent and Trademark Office
P.O. Box 1450
Alexandria, VA 22313-1450
www.uspto.gov

CLARIANT CORPORATION
INDUSTRIAL PROPERTY DEPARTMENT
4331 CHESAPEAKE DRIVE
CHARLOTTE NC 28216

COPY MAILED

OCT 17 2008

OFFICE OF PETITIONS

In re Patent No. 7,256,169	:	
Issued: August 14, 2007	:	
Application No. 08/994,479	:	ON PETITION
Filed: January 30, 2001	:	
Attorney Docket No. HOE96/HO15J	:	

This is a decision on the requests filed September 25, 2007 and November 13, 2007, which are being treated as a request under 37 CFR 3.81(b)[1] to add the second assignee's name to the issued patent.

The request is **DISMISSED**.

37 CFR 3.81(a) permits the patent to issue to the assignee, provided that, at the time the issue fee is paid, the name of an assignee is provided. 37 CFR 3.81(b) permits the patent to issue in the name of an assignee if the assignment was submitted after payment of the issue fee but ***prior to issuance of a patent***. Patent and Trademark Office assignment records disclose that an assignment to "Stockhausen GmbH & Co. KG" was recorded on September 7, 2007, after the date of issuance of this patent.

Accordingly, since the assignment was not submitted for recordation until after issuance of this patent, issuance of a certificate of correction would not be proper. *See* MPEP Section 307.

Inquiries concerning this decision should be directed to the undersigned at (571) 272-3206.

Liana Walsh
Petitions Examiner
Office of Petitions

[1] *See* Official Gazette of June 22, 2004

SPE RESPONSE FOR CERTIFICATE OF CORRECTION

Paper No.: _____

DATE : 07/20/2007

TO SPE OF : ART UNIT 2600 (2617)

SUBJECT : Request for Certificate of Correction on Patent No.: 6,049,593

Attn: E. Gary

A response is requested with respect to the accompanying request for a certificate of correction.

Please complete this form and return within **7** days to:

Certificates of Correction Branch - PK 3-922
Palm location **7580** - Tel. No. 305-8309

With respect to the change(s) requested, correcting Office and/or Applicant's errors, should the patent read as shown in the certificate of correction? No new matter should be introduced, nor should the scope or meaning of the claims be changed.

Ok to enter changes to formulas as requested in C of C?

Ernest C. White, LIE305-8339
Certificates of Correction Branch

Thank You For Your Assistance

The request for issuing the above-identified correction(s) is hereby:
Note your decision on the appropriate box.

- ☐ **Approved** — **All** changes apply.
- ☒ **Approved in Part** — Specify below which changes **do not** apply.
- ☐ **Denied** — State the reasons for denial below.

Comments:

Column 15, line 42: there is no "113".
The correction should be:
column 15, line 42, replace "112" with "113"

Charles N. Appiah 9/24/07

CHARLES N. APPIAH
SUPERVISORY PATENT EXAMINER

SPE Art 2617

SPE RESPONSE FOR CERTIFICATE OF CORRECTION

Paper No.: _____

DATE : 1-25-2010

TO SPE OF : ART UNIT 2153

SUBJECT : Request for Certificate of Correction for Appl. No.: 08/994848 Patent No.: 6237025

Please respond to this request for a certificate of correction within 7 days.

FOR IFW FILES:

Please review the requested changes/corrections as shown in the **COCIN** document(s) in the IFW application image. No new matter should be introduced, nor should the scope or meaning of the claims be changed.

Please complete the response (see below) and forward the completed response to scanning using document code **COCX**.

FOR PAPER FILES:

Please review the requested changes/corrections as shown in the attached certificate of correction. Please complete this form (see below) and forward it with the file to:

Certificates of Correction Branch (CofC)
Randolph Square – 9D10-A
Palm Location 7580

Should priority claim in item [63] be entered?

Eva James
Certificates of Correction Branch
703-756-1583 _____

Thank You For Your Assistance

The request for issuing the above-identified correction(s) is hereby:
Note your decision on the appropriate box.

- ☒ **Approved** — **All** changes apply.
- ☐ **Approved in Part** — Specify below which changes **do not** apply.
- ☐ **Denied** — State the reasons for denial below.

Comments: _____

SPE

2448
Art Unit

PTO/SB/66 (03-09)
Approved for use through 03/31/2012. OMB 0651-0016
U.S. Patent and Trademark Office: U.S. DEPARTMENT OF COMMERCE
Under the Paperwork Reduction Act of 1995, no persons are required to respond to a collection of information unless it displays valid OMB control number.

PETITION TO ACCEPT UNINTENTIONALLY DELAYED PAYMENT OF MAINTENANCE FEE IN AN EXPIRED PATENT (37 CFR 1.378(c))

Patent Number	Issue Date (YYYY-MM-DD)	Application Number	Filing Date (YYYY-MM-DD)	Docket Number (if applicable)
6,307,567	2001-10-23	08/995,568	1997-12-22	

CAUTION: Maintenance fee (and surcharge, if any) payment must correctly identify: (1) the patent number and (2) the application number of the actual U.S. application leading to issuance of that patent to ensure the fee(s) is/are associated with the correct patent. 37 CFR 1.366(c) and (d).

SMALL ENTITY
☒ Patentee claims, or has previously claimed, small entity status. See 37 CFR 1.27.

LOSS OF ENTITLEMENT TO SMALL ENTITY STATUS
☐ Patentee is no longer entitled to small entity status. See 37 CFR 1.27(g)

NOT Small Entity			Small Entity		
	Fee	Code		Fee	Code
○	3 ½ year	(1551)	○	3 ½ year	(2551)
○	7 ½ year	(1552)	◉	7 ½ year	(2552)
○	11 ½ year	(1553)	○	11 ½ year	(2553)

SURCHARGE
The surcharge required by 37 CFR 1.20(i)(2) (Fee Code 1558) must be paid as a condition of accepting unintentionally delayed payment of the maintenance fee.

MAINTENANCE FEE (37 CFR 1.20(e)-(g))
The appropriate maintenance fee must be submitted with this petition.

STATEMENT
THE UNDERSIGNED CERTIFIES THAT THE DELAY IN PAYMENT OF THE MAINTENANCE FEE TO THIS PATENT WAS UNINTENTIONAL

PETITIONER(S) REQUEST THAT THE DELAYED PAYMENT OF THE MAINTENANCE FEE BE ACCEPTED AND THE PATENT REINSTATED

THIS PORTION MUST BE COMPLETED BY THE SIGNATORY OR SIGNATORIES

37 CFR 1.378(d) states: "Any petition under this section must be signed by an attorney or agent registered to practice before the Patent and Trademark Office, or by the patentee, the assignee, or other party in interest."

I certify, in accordance with 37 CFR 1.4(d)(4) that I am

◉ An attorney or agent registered to practice before the Patent and Trademark Office

○ A sole patentee

○ A joint patentee; I certify that I am authorized to sign this submission on behalf of all the other patentees.

○ A joint patentee; all of whom are signing this e-petition

○ The assignee of record of the entire interest

Patent Practitioner			
A signature of the applicant or representative is required in accordance with 37 CFR 1.33 and 10.18. Please see 37 CFR 1.4(d) for the form of the signature			
Signature	/C. Scott Talbot/	Date (YYYY-MM-DD)	2010-05-21
Name	C. Scott Talbot	Registration Number	34262

This collection of information is required by 37 CFR 1.378(c). The information is required to obtain or retain a benefit by the public which is to file (and by the USPTO to process) an application. Confidentiality is governed by 35 U.S.C. 122 and 37 CFR 1.11 and 1.14. This collection is estimated to take 1 hour to complete, including gathering, preparing, and submitting the completed application form to the USPTO. Time will vary depending upon the individual case. Any comments on the amount of time you require to complete this form and/ or suggestions for reducing this burden, should be sent to the Chief Information Officer, U.S. Patent and Trademark Office, U.S. Department of Commerce, P.O. Box 1450, Alexandria, VA 22313-1450. DO NOT SEND FEES OR COMPLETED FORMS TO THIS ADDRESS. **This form can only be used when in conjunction with EFS-Web. If this form is mailed to the USPTO, it may cause delays in reinstating the patent.**

Privacy Act Statement

The Privacy Act of 1974 (P.L. 93-579) requires that you be given certain information in connection with your submission of the attached form related to a patent application or patent. Accordingly, pursuant to the requirements of the Act, please be advised that: (1) the general authority for the collection of this information is 35 U.S.C. 2(b)(2); (2) furnishing of the information solicited is voluntary; and (3) the principal purpose for which the information is used by the U.S. Patent and Trademark Office is to process and/or examine your submission related to a patent application or patent. If you do not furnish the requested information, the U.S. Patent and Trademark Office may not be able to process and/or examine your submission, which may result in termination of proceedings or abandonment of the application or expiration of the patent.

The information provided by you in this form will be subject to the following routine uses:

1. The information on this form will be treated confidentially to the extent allowed under the Freedom of Information Act (5 U.S.C. 552) and the Privacy Act (5 U.S.C. 552a). Records from this system of records may be disclosed to the Department of Justice to determine whether the Freedom of Information Act requires disclosure of these records.

2. A record from this system of records may be disclosed, as a routine use, in the course of presenting evidence to a court, magistrate, or administrative tribunal, including disclosures to opposing counsel in the course of settlement negotiations.

3. A record in this system of records may be disclosed, as a routine use, to a Member of Congress submitting a request involving an individual, to whom the record pertains, when the individual has requested assistance from the Member with respect to the subject matter of the record.

4. A record in this system of records may be disclosed, as a routine use, to a contractor of the Agency having need for the information in order to perform a contract. Recipients of information shall be required to comply with the requirements of the Privacy Act of 1974, as amended, pursuant to 5 U.S.C. 552a(m).

5. A record related to an International Application filed under the Patent Cooperation Treaty in this system of records may be disclosed, as a routine use, to the International Bureau of the World Intellectual Property Organization, pursuant to the Patent Cooperation Treaty.

6. A record in this system of records may be disclosed, as a routine use, to another federal agency for purposes of National Security review (35 U.S.C. 181) and for review pursuant to the Atomic Energy Act (42 U.S.C. 218(c)).

7. A record from this system of records may be disclosed, as a routine use, to the Administrator, General Services, or his/her designee, during an inspection of records conducted by GSA as part of that agency's responsibility to recommend improvements in records management practices and programs, under authority of 44 U.S.C. 2904 and 2906. Such disclosure shall be made in accordance with the GSA regulations governing inspection of records for this purpose, and any other relevant (i.e., GSA or Commerce) directive. Such disclosure shall not be used to make determinations about individuals.

8. A record from this system of records may be disclosed, as a routine use, to the public after either publication of the application pursuant to 35 U.S.C. 122(b) or issuance of a patent pursuant to 35 U.S.C. 151. Further, a record may be disclosed, subject to the limitations of 37 CFR 1.14, as a routine use, to the public if the record was filed in an application which became abandoned or in which the proceedings were terminated and which application is referenced by either a published application, an application open to public inspections or an issued patent.

9. A record from this system of records may be disclosed, as a routine use, to a Federal, State, or local law enforcement agency, if the USPTO becomes aware of a violation or potential violation of law or regulation.

UNITED STATES PATENT AND TRADEMARK OFFICE

Commissioner for Patents
United States Patent and Trademark Office
P.O. Box 1450
Alexandria, VA 22313-1450
www.uspto.gov

In re Patent No. 6307567
Issue Date: October 23,2001
Application No. 08995568
Filed: December 22,1997
Attorney Docket No. 20374-701

:
:DECISION GRANTING PETITION
:UNDER 37 CFR 1.378(c)
:

This is a decision on the electronic petition, filed May 21,2010 ,under 37 CFR 1.378(c) to accept the unintentionally delayed payment of the 7.5 year maintenance fee for the above-identified patent.

The petition is **GRANTED**.

The maintenance fee is accepted, and the above-identified patent reinstated as of May 21,2010 .
This decision also constitutes notice that the fee has been accepted. An electronic copy of the petition and this decision has been created as an entry in the Image File Wrapper. Nevertheless, petitioner should print and retain an independent copy.

Telephone inquiries related to this electronic decision should be directed to the Electronic Business Center at 1-866-217-9197.

UNITED STATES PATENT AND TRADEMARK OFFICE

UNITED STATES DEPARTMENT OF COMMERCE
United States Patent and Trademark Office
Address: COMMISSIONER FOR PATENTS
P.O. Box 1450
Alexandria, Virginia 22313-1450
www.uspto.gov

APPLICATION NO.	FILING DATE	FIRST NAMED INVENTOR	ATTORNEY DOCKET NO.	CONFIRMATION NO.
08/995,631	12/22/1997	JEFFREY OWEN FISHER	AT9-97-565	8072

7590 03/25/2008
LESLIE VAN LEEUWAN
IPLAW DEPT.-IMAD 4054
IBM CORP.
AUSTIN, TX 78758

EXAMINER
KINDRED, ALFORD W

ART UNIT	PAPER NUMBER
2181	

MAIL DATE	DELIVERY MODE
03/25/2008	PAPER

Please find below and/or attached an Office communication concerning this application or proceeding.

The time period for reply, if any, is set in the attached communication.

UNITED STATES PATENT AND TRADEMARK OFFICE

COMMISSIONER FOR PATENTS
UNITED STATES PATENT AND TRADEMARK OFFICE
P.O. BOX 1450
ALEXANDRIA, VA 22313-1450
www.uspto.gov

Leslie Van Leeuwan
IPLaw Dept. – IMAD 4054
IBM Corp.
Austin, TX 78758

In re Application of:	)	
J. O. FISHER et al	)	
Application No. 08/995,631	)	
Filed: December 22, 1997	)	**DECISION ON PETITION**
For: NETWORK DISTRIBUTED DISPLAY PAGES	)	
WITH IMAGE AND SYMBOLS FROM	)	
UNIVERSAL LIBRARY	)	

This is a decision on the petition, filed on 15 October 2007, under 37 CFR § 1.181 requesting to the Examiner to issue an Office Action after the Board's decision rendered on 23 October 2003.

The petition is **DISMISSED AS MOOT**.

A review of the application file indicates a Notice of Allowability and a Notice of Allowance and Fee(s) Due was mailed on 20 March 2008.

For the above stated reason, the petition is **DISMISSED AS MOOT**. The payment of issue fee and publication fee is due on/before 20 May 2008.

Any inquiry concerning this decision should be directed to the undersigned whose telephone number is (571) 272-3613.

Vincent N. Trans, SPRE/QAS
Technology Center 2100
Computer Architecture, Software, and
Information Security

UNITED STATES PATENT AND TRADEMARK OFFICE

Commissioner for Patents
United States Patent and Trademark Office
P.O. Box 1450
Alexandria, VA 22313-1450
www.uspto.gov

LESLIE VAN LEEUWAN
IPLAW DEPT.-IMAD 4054
IBM CORP.
AUSTIN TX 78758

OCT - 6 2008

In re Application of	:	
FISHER, JEFFREY OWEN et al.	:	
Application No.: 08/995,631	:	DECISION ON
Filing or 371(c) Date: 06/17/2004	:	PETITION
Attorney Docket Number: AT9-97-565	:	

This is a decision in response to the "Petition to Withdraw Holding of Abandonment," filed August 27, 2008.

This is **DISMISSED**.

Any further petition for reconsideration must be submitted within TWO (2) MONTHS from the mail date of this decision. Extensions of time under 37 CFR 1.136(a) are permitted. The reconsideration request should include a cover letter entitled "Renewed Petition under [insert the applicable code section]." This is **not** final agency action within the meaning of 5 U.S.C. § 704.

The above-identified application became abandoned for failure to timely and properly reply to the Notice of Allowability, mailed March 20, 2008. The Notice set a non-extendable three (3) month period for reply. No reply having been received, the application became abandoned on July 16, 2008.

The Notice of Allowability

A review of the Notice of Allowability reveals that the Notice clearly required drawings. The Notice states: "CORRECTED DRAWINGS must be submitted."

Further correspondence with respect to this matter should be addressed as follows:

By mail: Director for Patents
PO Box 1450
Alexandria, VA 22313-1450

By FAX: (571) 273-8300
Attn: Office of Petitions

By hand: Customer Service Window
Randolph Building
401 Dulany Street
Alexandria, VA 22314

Telephone inquiries concerning this matter should be directed to the undersigned at (703) 308-9250 ext. 175.

Kay D. Pinkney
Application Assistance Unit
Office of Data Management

UNITED STATES PATENT AND TRADEMARK OFFICE

Commissioner for Patents
United States Patent and Trademark Office
P.O. Box 1450
Alexandria, VA 22313-1450
www.uspto.gov

LESLIE VAN LEEUWAN
IPLAW DEPT.-IMAD 4054
IBM CORP.
AUSTIN, TX 78758

COPY MAILED

MAR 0 6 2009

OFFICE OF PETITIONS

In re Application of
Jeffrey O. Fisher, et al.
Application No. 08/995,631
Filed: December 22, 1997
Attorney Docket No. AT9-97-565

ON PETITION

This is a decision on the petition, filed December 8, 2008, to revive the above-identified application under the provisions of 37 CFR 1.137(b).

The petition is **GRANTED**.

This application became abandoned for failure to submit corrected formal drawings on or before June 20, 2008, as required by the Notice of Allowability, mailed March 20, 2008. Accordingly, the date of abandonment of this application is June 21, 2008. A Notice of Abandonment was mailed on July 16, 2008. On December 8, 2008, the present petition was filed.

The petition satisfies the requirements of 37 CFR 1.137(b) in that petitioner has supplied (1) drawings, (2) the petition fee of $1,620; and (3) an adequate statement of unintentional delay.

The file does not indicate a change of address has been submitted, although the address given on the petition differs from the address of record. If appropriate, a change of address should be filed in accordance with MPEP 601.03. A courtesy copy of this decision is being mailed to the address given on the petition; however, the Office will mail all future correspondence solely to the address of record.

The application is being referred to the Office of Data Management to oversee the review of the drawing filed November 6, 2006 and for processing into a patent.

Telephone inquires related to this decision should be directed to the undersigned at (571) 272-3204. Telephone inquiries related to processing as a patent should be directed to (571) 272-4200.

Sherry D. Brinkley
Petitions Examiner
Office of Petitions

cc: JUSTIN DILLON
IP LAW DEPT.
IBM CORPORATION
11400 BURNET ROAD
AUSTIN, TX 78758

UNITED STATES PATENT AND TRADEMARK OFFICE

COMMISSIONER FOR PATENTS
UNITED STATES PATENT AND TRADEMARK OFFICE
WASHINGTON, D.C. 20231
www.uspto.gov

Paper No. 16

Joseph W. Malleck
Ford Motor Company
600 Parklane Towers East
One Parklane Blvd.
Dearborn, MI 48126

COPY MAILED

JUN 19 2001

OFFICE OF PETITIONS
A/C PATENTS

In re Application of
Robert W. Sams, et al.
Application No. 08/996,249
Filed: December 22, 1997
Attorney Docket No. 196-0216

ON PETITION

This is a decision on the petition under 37 CFR 1.137(b), filed May 4, 2001, to revive the above-identified application.

The petition is **GRANTED**.

The above-identified application became abandoned for failure to reply within the meaning of 37 CFR 1.113 in a timely manner to the final Office action mailed July 12, 2000, which set a shortened statutory period for reply of three (3) months. No extensions of time under the provisions of 37 CFR 1.136(a) were obtained. Accordingly, the above-identified application became abandoned on October 13, 2000.

37 CFR 1.137(b)(3) requires a statement that the entire delay in filing the required reply from the due date for the reply until the filing of a grantable petition pursuant to 37 CFR 1.137(b) was unintentional. If the statement contained in the instant petition varies from the language required by 37 CFR 1.137(b)(3), the statement contained in the instant petition is being construed as the statement required by 37 CFR 1.137(b)(3) and petitioner must notify the Office if this is **not** a correct interpretation of the statement contained in the instant petition.

The above-identified application is being revived solely for purposes of continuity with a continued prosecution application (CPA) filed on May 4, 2001.

Telephone inquiries concerning this decision should be directed to Retta Williams at (703) 306-5594 or in her absence, Marianne Morgan at (703) 306-3475.

The application file is being forwarded to Technology Center 3600 for further processing.

Retta Williams

Retta Williams
Petitions Examiner
Office of Petitions
Office of the Deputy Commissioner
for Patent Examination Policy

Marianne Morgan

Marianne Morgan
Petitions Examiner

UNITED STATES PATENT AND TRADEMARK OFFICE

Commissioner for Patents
United States Patent and Trademark Office
P.O. Box 1450
Alexandria, VA 22313-1450
www.uspto.gov

In re Patent No. 6062520
Issue Date: May 16,2000
Application No. 08996618
Filed: December 23,1997
Attorney Docket No.

:

:DECISION GRANTING PETITION
:UNDER 37 CFR 1.378(c)

:

This is a decision on the electronic petition, filed August 14,2009 ,under 37 CFR 1.378(c) to accept the unintentionally delayed payment of the 7.5 year maintenance fee for the above-identified patent.

The petition is **GRANTED**.

The maintenance fee is accepted, and the above-identified patent reinstated as of August 14,2009 .
This decision also constitutes notice that the fee has been accepted. An electronic copy of the petition and this decision has been created as an entry in the Image File Wrapper. Nevertheless, petitioner should print and retain an independent copy.

Telephone inquiries related to this electronic decision should be directed to the Electronic Business Center at 1-866-217-9197.

PTO/SB/66 (03-09)
Approved for use through 03/31/2012. OMB 0651-0016
U.S. Patent and Trademark Office: U.S. DEPARTMENT OF COMMERCE
Under the Paperwork Reduction Act of 1995, no persons are required to respond to a collection of information unless it displays valid OMB control number.

PETITION TO ACCEPT UNINTENTIONALLY DELAYED PAYMENT OF MAINTENANCE FEE IN AN EXPIRED PATENT (37 CFR 1.378(c))

Patent Number	Issue Date (YYYY-MM-DD)	Application Number	Filing Date (YYYY-MM-DD)	Docket Number (if applicable)
6062520	2000-05-16	08996618	1997-12-23	

CAUTION: Maintenance fee (and surcharge, if any) payment must correctly identify: (1) the patent number and (2) the application number of the actual U.S. application leading to issuance of that patent to ensure the fee(s) is/are associated with the correct patent. 37 CFR 1.366(c) and (d).

SMALL ENTITY
☒ Patentee claims, or has previously claimed, small entity status. See 37 CFR 1.27.

LOSS OF ENTITLEMENT TO SMALL ENTITY STATUS
☐ Patentee is no longer entitled to small entity status. See 37 CFR 1.27(g)

NOT Small Entity		Small Entity	
Fee	Code	Fee	Code
○ 3 ½ year	(1551)	○ 3 ½ year	(2551)
○ 7 ½ year	(1552)	◉ 7 ½ year	(2552)
○ 11 ½ year	(1553)	○ 11 ½ year	(2553)

SURCHARGE
The surcharge required by 37 CFR 1.20(i)(2) (Fee Code 1558) must be paid as a condition of accepting unintentionally delayed payment of the maintenance fee.

MAINTENANCE FEE (37 CFR 1.20(e)-(g))
The appropriate maintenance fee must be submitted with this petition.

STATEMENT
THE UNDERSIGNED CERTIFIES THAT THE DELAY IN PAYMENT OF THE MAINTENANCE FEE TO THIS PATENT WAS UNINTENTIONAL

PETITIONER(S) REQUEST THAT THE DELAYED PAYMENT OF THE MAINTENANCE FEE BE ACCEPTED AND THE PATENT REINSTATED

THIS PORTION MUST BE COMPLETED BY THE SIGNATORY OR SIGNATORIES

37 CFR 1.378(d) states: "Any petition under this section must be signed by an attorney or agent registered to practice before the Patent and Trademark Office, or by the patentee, the assignee, or other party in interest."

I certify, in accordance with 37 CFR 1.4(d)(4) that I am

○ An attorney or agent registered to practice before the Patent and Trademark Office

○ A sole patentee

◉ A joint patentee; I certify that I am authorized to sign this submission on behalf of all the other patentees.

○ A joint patentee; all of whom are signing this e-petition

○ The assignee of record of the entire interest

A Joint Patentee and I certify that I am authorized to sign this submission on behalf of all the other patentees			
A signature of the applicant or representative is required in accordance with 37 CFR 1.33 and 10.18. Please see 37 CFR 1.4(d) for the form of the signature.			
Signature	/Rhonda Ralston/	Date (YYYY-MM-DD)	2009-08-14
Name	Rhonda Ralston		

This collection of information is required by 37 CFR 1.378(c). The information is required to obtain or retain a benefit by the public which is to file (and by the USPTO to process) an application. Confidentiality is governed by 35 U.S.C. 122 and 37 CFR 1.11 and 1.14. This collection is estimated to take 1 hour to complete, including gathering, preparing, and submitting the completed application form to the USPTO. Time will vary depending upon the individual case. Any comments on the amount of time you require to complete this form and/or suggestions for reducing this burden, should be sent to the Chief Information Officer, U.S. Patent and Trademark Office, U.S. Department of Commerce, P.O. Box 1450, Alexandria, VA 22313-1450. DO NOT SEND FEES OR COMPLETED FORMS TO THIS ADDRESS. **This form can only be used when in conjunction with EFS-Web. If this form is mailed to the USPTO, it may cause delays in reinstating the patent.**

Privacy Act Statement

The Privacy Act of 1974 (P.L. 93-579) requires that you be given certain information in connection with your submission of the attached form related to a patent application or patent. Accordingly, pursuant to the requirements of the Act, please be advised that: (1) the general authority for the collection of this information is 35 U.S.C. 2(b)(2); (2) furnishing of the information solicited is voluntary; and (3) the principal purpose for which the information is used by the U.S. Patent and Trademark Office is to process and/or examine your submission related to a patent application or patent. If you do not furnish the requested information, the U.S. Patent and Trademark Office may not be able to process and/or examine your submission, which may result in termination of proceedings or abandonment of the application or expiration of the patent.

The information provided by you in this form will be subject to the following routine uses:

1. The information on this form will be treated confidentially to the extent allowed under the Freedom of Information Act (5 U.S.C. 552) and the Privacy Act (5 U.S.C. 552a). Records from this system of records may be disclosed to the Department of Justice to determine whether the Freedom of Information Act requires disclosure of these records.

2. A record from this system of records may be disclosed, as a routine use, in the course of presenting evidence to a court, magistrate, or administrative tribunal, including disclosures to opposing counsel in the course of settlement negotiations.

3. A record in this system of records may be disclosed, as a routine use, to a Member of Congress submitting a request involving an individual, to whom the record pertains, when the individual has requested assistance from the Member with respect to the subject matter of the record.

4. A record in this system of records may be disclosed, as a routine use, to a contractor of the Agency having need for the information in order to perform a contract. Recipients of information shall be required to comply with the requirements of the Privacy Act of 1974, as amended, pursuant to 5 U.S.C. 552a(m).

5. A record related to an International Application filed under the Patent Cooperation Treaty in this system of records may be disclosed, as a routine use, to the International Bureau of the World Intellectual Property Organization, pursuant to the Patent Cooperation Treaty.

6. A record in this system of records may be disclosed, as a routine use, to another federal agency for purposes of National Security review (35 U.S.C. 181) and for review pursuant to the Atomic Energy Act (42 U.S.C. 218(c)).

7. A record from this system of records may be disclosed, as a routine use, to the Administrator, General Services, or his/her designee, during an inspection of records conducted by GSA as part of that agency's responsibility to recommend improvements in records management practices and programs, under authority of 44 U.S.C. 2904 and 2906. Such disclosure shall be made in accordance with the GSA regulations governing inspection of records for this purpose, and any other relevant (i.e., GSA or Commerce) directive. Such disclosure shall not be used to make determinations about individuals.

8. A record from this system of records may be disclosed, as a routine use, to the public after either publication of the application pursuant to 35 U.S.C. 122(b) or issuance of a patent pursuant to 35 U.S.C. 151. Further, a record may be disclosed, subject to the limitations of 37 CFR 1.14, as a routine use, to the public if the record was filed in an application which became abandoned or in which the proceedings were terminated and which application is referenced by either a published application, an application open to public inspections or an issued patent.

9. A record from this system of records may be disclosed, as a routine use, to a Federal, State, or local law enforcement agency, if the USPTO becomes aware of a violation or potential violation of law or regulation.

UNITED STATES PATENT AND TRADEMARK OFFICE

Commissioner for Patents
United States Patent and Trademark Office
P.O. Box 1450
Alexandria, VA 22313-1450
www.uspto.gov

In re Patent No. 6093019
Issue Date: July 25,2000
Application No. 08996982
Filed: December 23,1997
Attorney Docket No. 003358.P001

:
:DECISION GRANTING PETITION
:UNDER 37 CFR 1.378(c)
:

This is a decision on the electronic petition, filed July 30,2008 ,under 37 CFR 1.378(c) to accept the unintentionally delayed payment of the 7.5 year maintenance fee for the above-identified patent.

The petition is GRANTED.

The maintenance fee is accepted, and the above-identified patent reinstated as of July 30,2008 . This decision also constitutes notice that the fee has been accepted. An electronic copy of the petition and this decision has been created as an entry in an Image File Wrapper. Nevertheless, petitioner should print and retain an independent copy

Telephone inquires related to this electronic decision should be directed to the Electronic Business Center at 1-866-217-9197.

Under the Paperwork Reduction Act of 1995, no persons are required to respond to a collection of information unless it displays valid OMB control number.

PETITION TO ACCEPT UNINTENTIONALLY DELAYED PAYMENT OF MAINTENANCE FEE IN AN EXPIRED PATENT (37 CFR 1.378(c))

Patent Number	Issue Date (YYYY-MM-DD)	Application Number	Filing Date (YYYY-MM-DD)	Docket Number (if applicable)
6093019	2000-07-25	08996982	1997-12-23	1205100.00529US1

CAUTION: Maintenance fee (and surcharge, if any) payment must correctly identify: (1) the patent number and (2) the application number of the actual U.S. application leading to issuance of that patent to ensure the fee(s) is/are associated with the correct patent. 37 CFR 1.366(c) and (d).

SMALL ENTITY
☐ Patentee claims, or has previously claimed, small entity status. See 37 CFR 1.27.

LOSS OF ENTITLEMENT TO SMALL ENTITY STATUS
☐ Patentee is no longer entitled to small entity status. See 37 CFR 1.27(g)

NOT Small Entity			Small Entity		
	Fee	Code		Fee	Code
○	3 ½ year	(1551)	○	3 ½ year	(2551)
◉	7 ½ year	(1552)	○	7 ½ year	(2552)
○	11 ½ year	(1553)	○	11 ½ year	(2553)

SURCHARGE
The surcharge required by 37 CFR 1.20(i)(2) (Fee Code 1558) must be paid as a condition of accepting unintentionally delayed payment of the maintenance fee.

MAINTENANCE FEE (37 CFR 1.20(e)-(g))
The appropriate maintenance fee must be submitted with this petition.

STATEMENT
THE UNDERSIGNED CERTIFIES THAT THE DELAY IN PAYMENT OF THE MAINTENANCE FEE TO THIS PATENT WAS UNINTENTIONAL

PETITIONER(S) REQUEST THAT THE DELAYED PAYMENT OF THE MAINTENANCE FEE BE ACCEPTED AND THE PATENT REINSTATED

THIS PORTION MUST BE COMPLETED BY THE SIGNATORY OR SIGNATORIES

37 CFR 1.378(d) states: "Any petition under this section must be signed by an attorney or agent registered to practice before the Patent and Trademark Office, or by the patentee, the assignee, or other party in interest."

I certify, in accordance with 37 CFR 1.4(d)(4) that I am

◉ An attorney or agent registered to practice before the Patent and Trademark Office

○ A sole patentee

○ A joint patentee; I certify that I am authorized to sign this submission on behalf of all the other patentees.

○ A joint patentee; all of whom are signing this e-petition

○ The assignee of record of the entire interest

Patent Practitioner			
A signature of the applicant or representative is required in accordance with 37 CFR 1.33 and 10.18. Please see 37 CFR 1.4(d) for the form of the signature			
Signature	/Michael J. Bevilacqua/	Date (YYYY-MM-DD)	2008-07-30
Name	Michael J. Bevilacqua	Registration Number	31091

This collection of information is required by 37 CFR 1.378(c). The information is required to obtain or retain a benefit by the public which is to file (and by the USPTO to process) an application. Confidentiality is governed by 35 U.S.C. 122 and 37 CFR 1.11 and 1.14. This collection is estimated to take 1 hour to complete, including gathering, preparing, and submitting the completed application form to the USPTO. Time will vary depending upon the individual case. Any comments on the amount of time you require to complete this form and/ or suggestions for reducing this burden, should be sent to the Chief Information Officer, U.S. Patent and Trademark Office, U.S. Department of Commerce, P.O. Box 1450, Alexandria, VA 22313-1450. DO NOT SEND FEES OR COMPLETED FORMS TO THIS ADDRESS. **This form can only be used when in conjunction with EFS-Web. If this form is mailed to the USPTO, it may cause delays in reinstating the patent.**

Privacy Act Statement

The Privacy Act of 1974 (P.L. 93-579) requires that you be given certain information in connection with your submission of the attached form related to a patent application or patent. Accordingly, pursuant to the requirements of the Act, please be advised that: (1) the general authority for the collection of this information is 35 U.S.C. 2(b)(2); (2) furnishing of the information solicited is voluntary; and (3) the principal purpose for which the information is used by the U.S. Patent and Trademark Office is to process and/or examine your submission related to a patent application or patent. If you do not furnish the requested information, the U.S. Patent and Trademark Office may not be able to process and/or examine your submission, which may result in termination of proceedings or abandonment of the application or expiration of the patent.

The information provided by you in this form will be subject to the following routine uses:

1. The information on this form will be treated confidentially to the extent allowed under the Freedom of Information Act (5 U.S.C. 552) and the Privacy Act (5 U.S.C. 552a). Records from this system of records may be disclosed to the Department of Justice to determine whether the Freedom of Information Act requires disclosure of these record s.

2. A record from this system of records may be disclosed, as a routine use, in the course of presenting evidence to a court, magistrate, or administrative tribunal, including disclosures to opposing counsel in the course of settlement negotiations.

3. A record in this system of records may be disclosed, as a routine use, to a Member of Congress submitting a request involving an individual, to whom the record pertains, when the individual has requested assistance from the Member with respect to the subject matter of the record.

4. A record in this system of records may be disclosed, as a routine use, to a contractor of the Agency having need for the information in order to perform a contract. Recipients of information shall be required to comply with the requirements of the Privacy Act of 1974, as amended, pursuant to 5 U.S.C. 552a(m).

5. A record related to an International Application filed under the Patent Cooperation Treaty in this system of records may be disclosed, as a routine use, to the International Bureau of the World Intellectual Property Organization, pursuant to the Patent Cooperation Treaty.

6. A record in this system of records may be disclosed, as a routine use, to another federal agency for purposes of National Security review (35 U.S.C. 181) and for review pursuant to the Atomic Energy Act (42 U.S.C. 218(c)).

7. A record from this system of records may be disclosed, as a routine use, to the Administrator, General Services, or his/her designee, during an inspection of records conducted by GSA as part of that agency's responsibility to recommend improvements in records management practices and programs, under authority of 44 U.S.C. 2904 and 2906. Such disclosure shall be made in accordance with the GSA regulations governing inspection of records for this purpose, and any other relevant (i.e., GSA or Commerce) directive. Such disclosure shall not be used to make determinations about individuals.

8. A record from this system of records may be disclosed, as a routine use, to the public after either publication of the application pursuant to 35 U.S.C. 122(b) or issuance of a patent pursuant to 35 U.S.C. 151. Further, a record may be disclosed, subject to the limitations of 37 CFR 1.14, as a routine use, to the public if the record was filed in an application which became abandoned or in which the proceedings were terminated and which application is referenced by either a published application, an application open to public inspections or an issued patent.

9. A record from this system of records may be disclosed, as a routine use, to a Federal, State, or local law enforcement agency, if the USPTO becomes aware of a violation or potential violation of law or regulation.

UNITED STATES PATENT AND TRADEMARK OFFICE

Commissioner for Patents
United States Patent and Trademark Office
P.O. Box 1450
Alexandria, VA 22313-1450
www.uspto.gov

Paper No. 10

FOLEY & LARDNER
3000 K STREET NW
P.O. BOX 25696 SUITE 500
WASHINGTON, DC 20007-8696

COPY MAILED
AUG 2 4 2004
OFFICE OF PETITIONS

In re Application of	:	
Fudanuki et al.	:	
Patent No. 6,054,872	:	ON PETITION
Application No. 08/997,035	:	
Filed: December 23, 1997	:	
Issued: April 25, 2000		
Attorney Docket No. 040301-0487		

This is a decision on the petition under 37 CFR 1.378(c), filed June 24, 2004, to accept the unintentionally delayed payment of a maintenance fee for the above-identified patent.

The petition is **GRANTED**.

The patent issued April 25, 2000. The last day of the grace period for paying the 3.5 maintenance fee was April 25, 2004. Therefore, since this petition was filed within twenty-four months after the six-month grace period provided in 37 CFR 1.362(e), this petition was timely filed under the provisions of 37 CFR 1.378(c).

The maintenance fee is hereby accepted and the above-identified patent is reinstated as of the mail date of this decision.

Telephone inquiries concerning this decision should be directed to the undersigned at (703) 306-0482. Any telephone inquiries after September 28, 2004 should be directed to (571) 272-3206.

The patent file is being forwarded to Files Repository.

Liana Chase
Petitions Examiner
Office of Petitions
Office of the Deputy Commissioner
For Patent Examination Policy

UNITED STATES PATENT AND TRADEMARK OFFICE

COMMISSIONER FOR PATENTS
UNITED STATES PATENT AND TRADEMARK OFFICE
WASHINGTON, D.C. 20231
www.uspto.gov

Paper No. 11

KNOBBE MARTENS OLSON & BEAR LLP
620 NEWPORT CENTER DRIVE
SIXTEENTH FLOOR
NEWPORT BEACH , CA 92660

COPY MAILED

MAY 1 4 2001

OFFICE OF PETITIONS
A/C PATENTS

In re Application of
Fraklin
Application No. 08/997,570
Filed: December 23, 1997

ON PETITION

This is a decision on the petition under 37 CFR 1.137(b), filed January 16, 2001, to revive the above-identified application.

The petition is **GRANTED**.

The above-identified application became abandoned for failure to reply in a timely manner to the non-final Office action mailed September 15, 1999, which set a shortened statutory period for reply of three (3) months. No extension of time was received. Accordingly, the above-identified application became abandoned on December 16, 1999.

37 CFR 1.137(b)(3) requires a statement that the entire delay in filing the required reply from the due date for the reply until the filing of a grantable petition pursuant to 37 CFR 1.137(b) was unintentional. Since the statement contained in the instant petition varies from the language required by 37 CFR 1.137(b)(3), the statement contained in the instant petition is being construed as the statement required by 37 CFR 1.137(b)(3) and petitioner must notify the Office if this is **not** a correct interpretation of the statement contained in the instant petition.

The petitioner has met the requirements to revive the above-identified application, pursuant to 37 CFR 1.137(b). Petitioner submitted the required reply in the form of an amendment, paid the petition fee, and made a statement which is being construed as the proper statement of unintentional delay. Regarding the submission of the petition fee, petitioner states that a check was enclosed with the petition, but no check was received. Therefore, petitioner's Deposit Account has been charged in the amount of $620.00, per the petitioner's authorization to charge any additional fees associated with this petiution. If a check was indeed enclosed, petitioner should contact the Finance Division and request a refund, and a copy of this decision should be provided.

Pursuant to 37 CFR 1.136, an extension of time must be filed prior to the expiration of the maximum period obtainable for reply to avoid abandonment. Accordingly, the $55.00 check the petition states was submitted was unnecessary. Similar to the petition fee, this check was not received either. If a check was indeed enclosed, petitioner should contact the Finance Division and request a refund, and a copy of this decision should be provided.

The application file is being forwarded to Technology Center 2700 for further processing.

Telephone inquiries concerning this decision should be directed to Petitions Attorney Paul Shanoski at (703) 305-0011.

Beverly M. Flanagan
Supervisory Petitions Examiner
Office of Petitions
Office of the Deputy Commissioner
for Patent Examination Policy

UNITED STATES PATENT AND TRADEMARK OFFICE

COMMISSIONER FOR PATENTS
UNITED STATES PATENT AND TRADEMARK OFFICE
WASHINGTON, DC 20231
www.uspto.gov

Paper No. 16

KNOBBE MARTENS OLSON & BEAR LLP
2040 MAIN STREET
FOURTEENTH FLOOR
IRVINE CA 92614

MAILED

MAY 1 4 2003

Technology Center 2800

In re Application of:
Philip G. Franklin
Application No. 08/997,570
Filed: December 23, 1997
For: METHOD AND APPARATUS FOR THE ZONAL TRANSMISSION OF DATA USING BUILDING LIGHTING FIXTURES

ON PETITION

This is a decision on the petition filed April 18, 2003 under 37 CFR § 1.181(a) to withdraw the holding of abandonment. No fee is required.

The application was held abandoned for failure to timely file a proper reply to the Final Office action mailed May 7, 2002. A Notice of Abandonment was mailed on December 13, 2002.

Petitioner states that a timely filed Notice of Appeal along with a three (3) month extension was filed. In support, Petitioner has provided a copy of a date-stamped post card receipt acknowledging receipt of the Notice of Appeal in the U.S. Patent and Trademark Office on November 13, 2002. A copy of the Notice of Appeal is also submitted.

M.P.E.P. 503 states, " [a] post card receipt which itemizes and properly identifies the papers which are being filed serves as prima facie evidence of receipt in the PTO of all items listed thereon on the date stamped thereon by the PTO." Accordingly, it is concluded that the Issue Fee Transmittal was timely received in the Office.

The date stamped on the post-card November 13, 2002 is beyond the due date for the response. However, under 37 CFR 1.8(a)(1) correspondence is considered timely if: (1) the correspondence is mailed or transmitted prior to expiration of the set period for response by being properly addressed to the Patent and Trademark Office as set out in 37 CFR 1.1(a) and deposited with the U.S. Postal Service with sufficient postage as first class mail or transmitted to the Patent and Trademark Office in accordance with 37 CFR 1.6(d): and (2) the correspondence includes a certificate for each piece of correspondence stating the date of deposit or transmission. The person signing the certificate should have a reasonable basis to expect that the correspondence would be mailed or transmitted on or before the date indicated.

The Notice of Appeal bears a proper certificate of mailing with a deposit date of November 7, 2002 in compliance with the requirements of 37 CFR 1.8(a)(1) as set forth above. Accordingly, the Notice of Abandonment is hereby vacated and the Holding of Abandonment withdrawn.

For the reasons above, the petition is **GRANTED**.

It is noted that petitioner filed a request for Continued Prosecution Application (CPA) on April 4, 2003. The time period for filing an appeal brief or other appropriate response after a Notice of Appeal is two (2) months from the Official receipt date of the Notice of Appeal. See 37 CFR § 1.192(a) and MPEP § 1205. Therefore, the due date would have been January 13, 2003. Additionally, the time period for filing a response to a Notice of Appeal can be extended for five (5) months under 37 CFR § 1.136(a). Since petitioner filed a CPA along with a three month extension on April 4, 2003, the CPA is timely filed.

The application file will be forwarded to the Technology Center's technical support staff for entry of the Notice of Appeal. From there the application file will be forwarded to the examiner for further action in due course.

Jin F. Ng, Director
Technology Center 2600
Communications

UNITED STATES PATENT AND TRADEMARK OFFICE

Commissioner for Patents
United States Patent and Trademark Office
P.O. Box 1450
Alexandria, VA 22313-1450
www.uspto.gov

Paper No. 26

PHILIP G. FRANKLIN
NCCI TECHNOLOGY
9215 ORCO PARKWAY
SUITE F
RIVERSIDE, CA 92509

COPY MAILED

SEP 2 3 2004

OFFICE OF PETITIONS

In re Application of	:	
Philip G. Fraklin	:	
Application No. 08/997,570	:	ON PETITION
Filed: December 23, 1997	:	
Attorney Docket No. None	:	

This is a decision on the petition under 37 CFR 1.137(b), filed September 3, 2004, to revive the above-identified application.

The petition is **GRANTED**.

The above-identified application became abandoned for failure to reply in a timely manner to the Notice to File Missing Parts of Application (CPA (Notice)) mailed December 24, 2003. The Notice set a period for reply of two (2) months from the mail date of the Notice. No extensions of time under the provisions of 37 CFR 1.136(a) were obtained. Accordingly, the above-identified application became abandoned on February 25, 2004.

It is not apparent whether the person signing the statement of unintentional delay was in a position to have firsthand or direct knowledge of the facts and circumstances of the delay at issue. Nevertheless, such statement is being treated as having been made as the result of a reasonable inquiry into the facts and circumstances of such delay. See 37 CFR 10.18(b) and Changes to Patent Practice and Procedure; Final Rule Notice, 62 Fed. Reg. 53131, 53178 (October 10, 1997), 1203 Off. Gaz. Pat. Office 63, 103 (October 21, 1997). In the event that such an inquiry has not been made, petitioner must make such an inquiry. If such inquiry results in the discovery that it is not correct that the entire delay in filing the required reply from the due date for the reply until the filing of a grantable petition pursuant to 37 CFR 1.137(b) was unintentional, petitioner must notify the Office.

There is no indication that the person signing the instant petition was ever given a power of attorney or authorization of agent to prosecute the above-identified application. If the person signing the instant petition desires to receive future correspondence regarding this application,

the appropriate power of attorney or authorization of agent must be submitted. While a courtesy copy of this decision is being mailed to the person signing the instant petition, all future correspondence will be directed to the address of currently of record until such time as appropriate instructions are received to the contrary.

An extension of time under 37 CFR 1.136 must be filed prior to the expiration of the maximum extendable period for reply. See In re Application of S., 8 USPQ2d 1630, 1631 (Comm'r Pats. 1988). Accordingly, since the $740.00 extension of time submitted with the petition on September 3, 2004 was subsequent to the maximum extendable period for reply, petitioner may request a refund of this fee by writing to: Mail Stop 16, Director of the US Patent and Trademark Office, P.O. Box 1450, Alexandria, VA 22313-1450. A copy of this decision should accompany petitioner's request.

Telephone inquiries concerning this decision should be directed to Wan Laymon at (703) 306-5685.

The application file is being forwarded to Technology Center AU 2633.

Wan Laymon
Wan Laymon
Petitions Examiner
Office of Petitions
Office of the Deputy Commissioner
for Patent Examination Policy

cc: WILLIAM G. LANE
16485 LAGUNA CANYON ROAD, #250
IRVINE, CA 92618

UNITED STATES PATENT AND TRADEMARK OFFICE

COMMISSIONER FOR PATENTS
UNITED STATES PATENT AND TRADEMARK OFFICE
P.O. BOX 1450
ALEXANDRIA, VA 22313-1450
www.uspto.gov

WILLIAM G. LANE, ESQ
WILLIAM G. LANE, INC., P.C.
16485 LAGUNA CANYON ROAD, SUITE 250
IRVINE, CA 92618

COPY MAILED
AUG 0 5 2005
OFFICE OF PETITIONS

In re Application of :
Philip G. Franklin :
Application No. 08/997,570 : ON PETITION
Filed: December 23, 1997 :
For: METHOD AND APPARATUS FOR THE :
ZONAL TRANSMISSION OF DATA ... :

This is a decision on the petition, filed August 5, 2005, under 37 CFR 1.313(c)(2) to withdraw the above-identified application from issue after payment of the issue fee.

The petition is **GRANTED**.

The above-identified application is withdrawn from issue for consideration of a submission under 37 CFR 1.114 (request for continued examination). See 37 CFR 1.313(c)(2).

Petitioner is advised that the issue fee paid on June 20, 2005, in the above-identified application, cannot be refunded. If, however, the above-identified application is again allowed, petitioner may request that it be applied towards the issue fee required by the new Notice of Allowance. [1]

Telephone inquiries relating to this decision should be directed to the undersigned at (571) 272-3204.

The application is being referred to Technology Center AU 2633 for further processing of the request for continued examination under 37 CFR 1.114.

Sherry D. Brinkley
Petitions Examiner
Office of Petitions

[1]The request to apply the issue fee to the new Notice may be satisfied by completing and returning the new Issue Fee Transmittal Form PTOL-85(b), which includes the following language thereon: "Commissioner for Patents is requested to apply the Issue Fee and Publication Fee (if any) or re-apply any previously paid issue fee to the application identified above." Petitioner is advised that, whether a fee is indicated as being due or not, the Issue Fee Transmittal Form **must** be completed and timely submitted to avoid abandonment. Note the language in bold text on the first page of the Notice of Allowance and Fee(s) Due (PTOL-85).

UNITED STATES PATENT AND TRADEMARK OFFICE

COMMISSIONER FOR PATENTS
UNITED STATES PATENT AND TRADEMARK OFFICE
WASHINGTON, D.C. 20231
www.uspto.gov

Paper No. 25

SWABEY OGILVY RENAULT
1981 MCGILL COLLEGE AVE
SUITE 1600
MONTREAL H3A2Y-3 CA CANADA

COPY MAILED

MAR 2 5 2003

OFFICE OF PETITIONS

In re Application of
Petras, et al.
Application No. 08/997,990
Filed: December 24, 1997
Attorney Docket No. 9-13528-11US

ON PETITION

This is a decision on the petition under 37 CFR 1.137(b), filed November 25, 2002, to revive the above-identified application.[1]

The petition is **GRANTED**.

The above-identified application became abandoned for failure to timely file a proper response to the final Office action mailed February 25, 2002. Applicant filed an amendment on April 26, 2002. However, by Advisory Action mailed May 13, 2002, the examiner informed applicant that the amendment would not be entered. Applicant filed another amendment on July 3, 2002, made timely by obtaining a two month extension of time. However, by Advisory Action mailed September 19, 2002, the examiner again informed applicant that the amendment would not be entered. No proper reply having been received, the above identified application became abandoned on July 26, 2002. A Notice of Abandonment was mailed on November 4, 2002.

With the instant petition, applicant made a statement of unintentional delay and filed the required reply in the form of a Request for Continued Examination (RCE). 37 CFR 1.137(b)(3) requires a statement that the entire delay in filing the required reply from the due date for the reply until the filing of a grantable petition pursuant to 37 CFR 1.137(b) was unintentional. The statement contained in the instant petition varies from the language required by 37 CFR 1.137(b)(3). The statement contained in the instant petition is being construed as the statement required by 37 CFR 1.137(b)(3). Petitioner must notify the Office if this is **not** a correct interpretation of the statement contained in the instant petition.

The petition fee of $1,280 and the RCE fee of $740 have been charged to Deposit Account No. 19-5113, as authorized.[2]

---

[1] The petition was filed under 37 CFR 1.137(b), but authorized the Office to charge the $110 fee for a petition under 37 CFR 1.137(a). In a telephone conversation between the Petitions Attorney and counsel Mark Davis on March 24, 2003, Mr. Davis authorized the Office to charge the fee under 37 CFR 1.137(b), consistent with the written authorization in the file to charge any additional required fees.

[2] Those were the fees in effect when the petition was filed.

The application file is being forwarded to Technology Center 3600 for consideration of the RCE, filed November 25, 2002.

Telephone inquiries concerning this decision should be directed to the undersigned at (703) 305-0272.

Cliff Congo
Petitions Attorney
Office of Petitions

Under the Paperwork Reduction Act of 1995, no persons are required to respond to a collection of information unless it displays valid OMB control number.

PETITION TO ACCEPT UNINTENTIONALLY DELAYED PAYMENT OF MAINTENANCE FEE IN AN EXPIRED PATENT (37 CFR 1.378(c))

Patent Number	Issue Date (YYYY-MM-DD)	Application Number	Filing Date (YYYY-MM-DD)	Docket Number (if applicable)
6014840	2000-01-18	08998144	1997-12-24	97-07

CAUTION: Maintenance fee (and surcharge, if any) payment must correctly identify: (1) the patent number and (2) the application number of the actual U.S. application leading to issuance of that patent to ensure the fee(s) is/are associated with the correct patent. 37 CFR 1.366(c) and (d).

SMALL ENTITY
☐ Patentee claims, or has previously claimed, small entity status. See 37 CFR 1.27.

LOSS OF ENTITLEMENT TO SMALL ENTITY STATUS
☐ Patentee is no longer entitled to small entity status. See 37 CFR 1.27(g)

NOT Small Entity		Small Entity	
Fee	Code	Fee	Code
○ 3 ½ year	(1551)	○ 3 ½ year	(2551)
◉ 7 ½ year	(1552)	○ 7 ½ year	(2552)
○ 11 ½ year	(1553)	○ 11 ½ year	(2553)

SURCHARGE
The surcharge required by 37 CFR 1.20(i)(2) (Fee Code 1558) must be paid as a condition of accepting unintentionally delayed payment of the maintenance fee.

MAINTENANCE FEE (37 CFR 1.20(e)-(g))
The appropriate maintenance fee must be submitted with this petition.

STATEMENT
THE UNDERSIGNED CERTIFIES THAT THE DELAY IN PAYMENT OF THE MAINTENANCE FEE TO THIS PATENT WAS UNINTENTIONAL

PETITIONER(S) REQUEST THAT THE DELAYED PAYMENT OF THE MAINTENANCE FEE BE ACCEPTED AND THE PATENT REINSTATED

THIS PORTION MUST BE COMPLETED BY THE SIGNATORY OR SIGNATORIES

37 CFR 1.378(d) states: "Any petition under this section must be signed by an attorney or agent registered to practice before the Patent and Trademark Office, or by the patentee, the assignee, or other party in interest."

I certify, in accordance with 37 CFR 1.4(d)(4) that I am

◉ An attorney or agent registered to practice before the Patent and Trademark Office

○ A sole patentee

○ A joint patentee; I certify that I am authorized to sign this submission on behalf of all the other patentees.

○ A joint patentee; all of whom are signing this e-petition

○ The assignee of record of the entire interest

Patent Practitioner			
A signature of the applicant or representative is required in accordance with 37 CFR 1.33 and 10.18. Please see 37 CFR 1.4(d) for the form of the signature			
Signature	/Dean B. Watson/	Date (YYYY-MM-DD)	2008-11-20
Name	Dean B. Watson	Registration Number	43242

This collection of information is required by 37 CFR 1.378(c). The information is required to obtain or retain a benefit by the public which is to file (and by the USPTO to process) an application. Confidentiality is governed by 35 U.S.C. 122 and 37 CFR 1.11 and 1.14. This collection is estimated to take 1 hour to complete, including gathering, preparing, and submitting the completed application form to the USPTO. Time will vary depending upon the individual case. Any comments on the amount of time you require to complete this form and/ or suggestions for reducing this burden, should be sent to the Chief Information Officer, U.S. Patent and Trademark Office, U.S. Department of Commerce, P.O. Box 1450, Alexandria, VA 22313-1450. DO NOT SEND FEES OR COMPLETED FORMS TO THIS ADDRESS. **This form can only be used when in conjunction with EFS-Web. If this form is mailed to the USPTO, it may cause delays in reinstating the patent.**

Privacy Act Statement

The Privacy Act of 1974 (P.L. 93-579) requires that you be given certain information in connection with your submission of the attached form related to a patent application or patent. Accordingly, pursuant to the requirements of the Act, please be advised that: (1) the general authority for the collection of this information is 35 U.S.C. 2(b)(2); (2) furnishing of the information solicited is voluntary; and (3) the principal purpose for which the information is used by the U.S. Patent and Trademark Office is to process and/or examine your submission related to a patent application or patent. If you do not furnish the requested information, the U.S. Patent and Trademark Office may not be able to process and/or examine your submission, which may result in termination of proceedings or abandonment of the application or expiration of the patent.

The information provided by you in this form will be subject to the following routine uses:

1. The information on this form will be treated confidentially to the extent allowed under the Freedom of Information Act (5 U.S.C. 552) and the Privacy Act (5 U.S.C. 552a). Records from this system of records may be disclosed to the Department of Justice to determine whether the Freedom of Information Act requires disclosure of these record s.

2. A record from this system of records may be disclosed, as a routine use, in the course of presenting evidence to a court, magistrate, or administrative tribunal, including disclosures to opposing counsel in the course of settlement negotiations.

3. A record in this system of records may be disclosed, as a routine use, to a Member of Congress submitting a request involving an individual, to whom the record pertains, when the individual has requested assistance from the Member with respect to the subject matter of the record.

4. A record in this system of records may be disclosed, as a routine use, to a contractor of the Agency having need for the information in order to perform a contract. Recipients of information shall be required to comply with the requirements of the Privacy Act of 1974, as amended, pursuant to 5 U.S.C. 552a(m).

5. A record related to an International Application filed under the Patent Cooperation Treaty in this system of records may be disclosed, as a routine use, to the International Bureau of the World Intellectual Property Organization, pursuant to the Patent Cooperation Treaty.

6. A record in this system of records may be disclosed, as a routine use, to another federal agency for purposes of National Security review (35 U.S.C. 181) and for review pursuant to the Atomic Energy Act (42 U.S.C. 218(c)).

7. A record from this system of records may be disclosed, as a routine use, to the Administrator, General Services, or his/her designee, during an inspection of records conducted by GSA as part of that agency's responsibility to recommend improvements in records management practices and programs, under authority of 44 U.S.C. 2904 and 2906. Such disclosure shall be made in accordance with the GSA regulations governing inspection of records for this purpose, and any other relevant (i.e., GSA or Commerce) directive. Such disclosure shall not be used to make determinations about individuals.

8. A record from this system of records may be disclosed, as a routine use, to the public after either publication of the application pursuant to 35 U.S.C. 122(b) or issuance of a patent pursuant to 35 U.S.C. 151. Further, a record may be disclosed, subject to the limitations of 37 CFR 1.14, as a routine use, to the public if the record was filed in an application which became abandoned or in which the proceedings were terminated and which application is referenced by either a published application, an application open to public inspections or an issued patent.

9. A record from this system of records may be disclosed, as a routine use, to a Federal, State, or local law enforcement agency, if the USPTO becomes aware of a violation or potential violation of law or regulation.

UNITED STATES PATENT AND TRADEMARK OFFICE

Commissioner for Patents
United States Patent and Trademark Office
P.O. Box 1450
Alexandria, VA 22313-1450
www.uspto.gov

In re Patent No. 6014840
Issue Date: January 18,2000
Application No. 08998144
Filed: December 24,1997
Attorney Docket No. 1136173032

:

:DECISION GRANTING PETITION
:UNDER 37 CFR 1.378(c)

:

This is a decision on the electronic petition, filed November 20,2008 ,under 37 CFR 1.378(c) to accept the unintentionally delayed payment of the 7.5 year maintenance fee for the above-identified patent.

The petition is **GRANTED**.

The maintenance fee is accepted, and the above-identified patent reinstated as of November 20,2008 . This decision also constitutes notice that the fee has been accepted. An electronic copy of the petition and this decision has been created as an entry in the Image File Wrapper. Nevertheless, petitioner should print and retain an independent copy.

Telephone inquiries related to this electronic decision should be directed to the Electronic Business Center at 1-866-217-9197.

UNITED STATES PATENT AND TRADEMARK OFFICE

Commissioner for Patents
United States Patent and Trademark Office
PO Box 1450
Arlington, VA 22313-1450
www.uspto.gov

Paper No. 18

The Jenifer Building
400 Seventh Street, NW
Washington, DC 20004-2201

COPY MAILED

SEP 2 9 2003

OFFICE OF PETITIONS

In re Application of	:	
Im Cheol Ha	:	
Application No. 08/998,157	:	ON PETITION
Filed: December 24, 1997	:	
Attorney Docket No. P66470US0	:	

This is a decision on the petition under 37 CFR 1.137(b), filed May 28, 2003, to revive the above-identified application.

The petition is **DISMISSED**.

The above-identified application became abandoned for failure to reply within the meaning of 37 CFR 1.113 in a timely manner in reply to the final Office action mailed February 2, 1999, which set a shortened statutory period for reply of three months. No extensions of time under the provisions of 37 CFR 1.136 have been obtained. Accordingly, the application became abandoned on May 3, 1999.

Any request for reconsideration of this decision must be submitted within TWO (2) MONTHS from the mail date of this decision. Extensions of time under 37 CFR 1.136(a) are permitted. The reconsideration request should include a cover letter entitled "Renewed Petition under 37 CFR 1.137(b)." This is **not** final agency action within the meaning of 5 U.S.C. § 704.

A grantable petition under 37 CFR 1.137(b) must be accompanied by: (1) the required reply, unless previously filed; (2) the petition fee as set forth in 37 CFR 1.17(m); (3) a statement that the entire delay in filing the required reply from the due date for the reply until the filing of a grantable petition pursuant to 37 CFR 1.137(b) was unintentional; and (4) any terminal disclaimer (and fee as set forth in 37 CFR 1.20(d)) required by 37 CFR 1.137(c). Where there is a question as to whether either the abandonment or the delay in filing a petition under 37 CFR 1.137 was unintentional, the Commissioner may require additional information. See MPEP 711.03(c)(III)(C) and (D). The instant petition lack(s) item(s) (1).

The application became abandoned for failure to timely file a reply within the meaning of 37 CFR 1.113 to the final Office action of . The proposed reply required for consideration of a petition to revive must be a Notice of Appeal (and appeal fee required by 37 CFR 1.17(b)), an amendment that *prima facie* places the application in condition for allowance, or the filing of a continuing application. See MPEP 711.03(c)(III)(A)(2). Since the amendment submitted does not *prima facie* place the application in condition for allowance, the reply required must be a Notice of Appeal (and appeal fee), a Request for Continued Examination, or the filing of a continuing application. Alternatively, the reply requirement may be met by the filing of a submission under 37 CFR 1.129(a) if the above-identified application is eligible for such transitional practice.

Further correspondence with respect to this matter should be addressed as follows:

By mail: Mail Stop Petitions
PO Box 1450
Arlington,VA 22313-1450

By facsimile: (703) 308-6916
Attn: Office of Petitions

By hand: Office of Petitions
2201 South Clark Place
Crystal Plaza 4, Suite 3C23
Arlington, VA 22202

Telephone inquiries concerning this decision should be directed to Latrice Bond at (703) 308-6911.

Latrice Bond

Latrice Bond
Paralegal Specialist
Office of Petitions
Office of the Deputy Commissioner
for Patent Examination Policy

Attachment: Advisory Action

10-1-03 Ysh P66470US

UNITED STATES PATENT AND TRADEMARK OFFICE

Commissioner for Patents
United States Patent and Trademark Office
PO Box 1450
Arlington, VA 22313-1450
www.uspto.gov

OIPE JC98
DEC 0 1 2003
PATENT & TRADEMARK OFFICE

Paper No. 18

The Jenifer Building
400 Seventh Street, NW
Washington, DC 20004-2201

JACOBSON HOLMAN PLLC
Response Due On Or Before
11 / 29 / 03
Month Day Year

COPY MAILED
SEP 2 9 2003
OFFICE OF PETITIONS

In re Application of :
Im Cheol Ha :
Application No. 08/998,157 : ON PETITION
Filed: December 24, 1997 :
Attorney Docket No. P66470US0 :

This is a decision on the petition under 37 CFR 1.137(b), filed May 28, 2003, to revive the above-identified application.

The petition is **DISMISSED**.

The above-identified application became abandoned for failure to reply within the meaning of 37 CFR 1.113 in a timely manner in reply to the final Office action mailed February 2, 1999, which set a shortened statutory period for reply of three months. No extensions of time under the provisions of 37 CFR 1.136 have been obtained. Accordingly, the application became abandoned on May 3, 1999.

Any request for reconsideration of this decision must be submitted within TWO (2) MONTHS from the mail date of this decision. Extensions of time under 37 CFR 1.136(a) are permitted. The reconsideration request should include a cover letter entitled "Renewed Petition under 37 CFR 1.137(b)." This is **not** final agency action within the meaning of 5 U.S.C. § 704.

A grantable petition under 37 CFR 1.137(b) must be accompanied by: (1) the required reply, unless previously filed; (2) the petition fee as set forth in 37 CFR 1.17(m); (3) a statement that the entire delay in filing the required reply from the due date for the reply until the filing of a grantable petition pursuant to 37 CFR 1.137(b) was unintentional; and (4) any terminal disclaimer (and fee as set forth in 37 CFR 1.20(d)) required by 37 CFR 1.137(c). Where there is a question as to whether either the abandonment or the delay in filing a petition under 37 CFR 1.137 was unintentional, the Commissioner may require additional information. See MPEP 711.03(c)(III)(C) and (D). The instant petition lack(s) item(s) (1).

RECEIVED
DEC 0 4 2003
OFFICE OF PETITIONS

The application became abandoned for failure to timely file a reply within the meaning of 37 CFR 1.113 to the final Office action of . The proposed reply required for consideration of a petition to revive must be a Notice of Appeal (and appeal fee required by 37 CFR 1.17(b)), an amendment that *prima facie* places the application in condition for allowance, or the filing of a continuing application. See MPEP 711.03(c)(III)(A)(2). Since the amendment submitted does not *prima facie* place the application in condition for allowance, the reply required must be a Notice of Appeal (and appeal fee), a Request for Continued Examination, or the filing of a continuing application. Alternatively, the reply requirement may be met by the filing of a submission under 37 CFR 1.129(a) if the above-identified application is eligible for such transitional practice.

Further correspondence with respect to this matter should be addressed as follows:

By mail: Mail Stop Petitions
PO Box 1450
Arlington, VA 22313-1450

By facsimile: (703) 308-6916
Attn: Office of Petitions

By hand: Office of Petitions
2201 South Clark Place
Crystal Plaza 4, Suite 3C23
Arlington, VA 22202

Telephone inquiries concerning this decision should be directed to Latrice Bond at (703) 308-6911.

Latrice Bond

Latrice Bond
Paralegal Specialist
Office of Petitions
Office of the Deputy Commissioner
for Patent Examination Policy

Attachment: Advisory Action

UNITED STATES PATENT AND TRADEMARK OFFICE

COMMISSIONER FOR PATENTS
UNITED STATES PATENT AND TRADEMARK OFFICE
P.O. BOX 1450
ALEXANDRIA, VA 22313-1450
www.uspto.gov

Paper No. 22

The Jenifer Building
400 Seventh Street, NW
Washington, DC 20004-2201

COPY MAILED

DEC 0 9 2003

OFFICE OF PETITIONS

In re Application of :
Im Cheol Ha :
Application No. 08/998,157 :
Filed: December 24, 1997 :
Attorney Docket No. P66470US0 :

ON PETITION

This is a decision on the renewed petition under 37 CFR 1.137(b), filed November 13, 2003, to revive the above-identified application.

The petition is GRANTED.

The application file is being forwarded to Technology Center AU 2818 for processing the Request for Continued Examination pursuant to 37 CFR 1.114 filed with the instant petition.

Telephone inquiries concerning this decision should be directed to Latrice Bond at (703) 308-6911.

Latrice Bond

Latrice Bond
Paralegal Specialist
Office of Petitions
Office of the Deputy Commissioner
for Patent Examination Policy

UNITED STATES PATENT AND TRADEMARK OFFICE

Commissioner for Patents
United States Patent and Trademark Office
P.O. Box 1450
Alexandria, VA 22313-1450
www.uspto.gov

In re Patent No. 6020840
Issue Date: February 1,2000
Application No. 08998244
Filed: December 24,1997
Attorney Docket No. 65093/3

:
:DECISION GRANTING PETITION
:UNDER 37 CFR 1.378(c)
:

This is a decision on the electronic petition, filed January 29,2010 ,under 37 CFR 1.378(c) to accept the unintentionally delayed payment of the 7.5 year maintenance fee for the above-identified patent.

The petition is **GRANTED**.

The maintenance fee is accepted, and the above-identified patent reinstated as of January 29,2010 . This decision also constitutes notice that the fee has been accepted. An electronic copy of the petition and this decision has been created as an entry in the Image File Wrapper. Nevertheless, petitioner should print and retain an independent copy.

Telephone inquiries related to this electronic decision should be directed to the Electronic Business Center at 1-866-217-9197.

PTO/SB/66 (03-09)
Approved for use through 03/31/2012. OMB 0651-0016
U.S. Patent and Trademark Office: U.S. DEPARTMENT OF COMMERCE
Under the Paperwork Reduction Act of 1995, no persons are required to respond to a collection of information unless it displays valid OMB control number.

PETITION TO ACCEPT UNINTENTIONALLY DELAYED PAYMENT OF MAINTENANCE FEE IN AN EXPIRED PATENT (37 CFR 1.378(c))

Patent Number	Issue Date (YYYY-MM-DD)	Application Number	Filing Date (YYYY-MM-DD)	Docket Number (if applicable)
6,020,840	2000-02-01	08998244	1997-12-24	

CAUTION: Maintenance fee (and surcharge, if any) payment must correctly identify: (1) the patent number and (2) the application number of the actual U.S. application leading to issuance of that patent to ensure the fee(s) is/are associated with the correct patent. 37 CFR 1.366(c) and (d).

SMALL ENTITY
☒ Patentee claims, or has previously claimed, small entity status. See 37 CFR 1.27.

LOSS OF ENTITLEMENT TO SMALL ENTITY STATUS
☐ Patentee is no longer entitled to small entity status. See 37 CFR 1.27(g)

NOT Small Entity		Small Entity	
Fee	Code	Fee	Code
○ 3 ½ year	(1551)	○ 3 ½ year	(2551)
○ 7 ½ year	(1552)	◉ 7 ½ year	(2552)
○ 11 ½ year	(1553)	○ 11 ½ year	(2553)

SURCHARGE
The surcharge required by 37 CFR 1.20(i)(2) (Fee Code 1558) must be paid as a condition of accepting unintentionally delayed payment of the maintenance fee.

MAINTENANCE FEE (37 CFR 1.20(e)-(g))
The appropriate maintenance fee must be submitted with this petition.

STATEMENT
THE UNDERSIGNED CERTIFIES THAT THE DELAY IN PAYMENT OF THE MAINTENANCE FEE TO THIS PATENT WAS UNINTENTIONAL

PETITIONER(S) REQUEST THAT THE DELAYED PAYMENT OF THE MAINTENANCE FEE BE ACCEPTED AND THE PATENT REINSTATED

THIS PORTION MUST BE COMPLETED BY THE SIGNATORY OR SIGNATORIES

37 CFR 1.378(d) states: "Any petition under this section must be signed by an attorney or agent registered to practice before the Patent and Trademark Office, or by the patentee, the assignee, or other party in interest."

I certify, in accordance with 37 CFR 1.4(d)(4) that I am

○ An attorney or agent registered to practice before the Patent and Trademark Office

○ A sole patentee

○ A joint patentee; I certify that I am authorized to sign this submission on behalf of all the other patentees.

○ A joint patentee; all of whom are signing this e-petition

◉ The assignee of record of the entire interest

The Assignee of record of the entire interest			
Under 37 CFR 3.71 an assignee becomes of record by filing a statement in compliance with 37 CFR 3.73(b). Signature requirements are set forth in 37 CFR 1.4(d), and the undersigned certifies that he / she is empowered to act on behalf of the assignee of the entire interest			
Signature	/SCOTT R CHICHESTER/	Date (YYYY-MM-DD)	2009-01-29
Name	SCOTT R CHICHESTER		
Enter Reel and Frame Number		Remove	
Reel Number	014871	Frame Number	0352
Click ADD for additional Reel Number and Frame Number		Add	

This collection of information is required by 37 CFR 1.378(c). The information is required to obtain or retain a benefit by the public which is to file (and by the USPTO to process) an application. Confidentiality is governed by 35 U.S.C. 122 and 37 CFR 1.11 and 1.14. This collection is estimated to take 1 hour to complete, including gathering, preparing, and submitting the completed application form to the USPTO. Time will vary depending upon the individual case. Any comments on the amount of time you require to complete this form and/ or suggestions for reducing this burden, should be sent to the Chief Information Officer, U.S. Patent and Trademark Office, U.S. Department of Commerce, P.O. Box 1450, Alexandria, VA 22313-1450. DO NOT SEND FEES OR COMPLETED FORMS TO THIS ADDRESS. **This form can only be used when in conjunction with EFS-Web. If this form is mailed to the USPTO, it may cause delays in reinstating the patent.**

Privacy Act Statement

The Privacy Act of 1974 (P.L. 93-579) requires that you be given certain information in connection with your submission of the attached form related to a patent application or patent. Accordingly, pursuant to the requirements of the Act, please be advised that: (1) the general authority for the collection of this information is 35 U.S.C. 2(b)(2); (2) furnishing of the information solicited is voluntary; and (3) the principal purpose for which the information is used by the U.S. Patent and Trademark Office is to process and/or examine your submission related to a patent application or patent. If you do not furnish the requested information, the U.S. Patent and Trademark Office may not be able to process and/or examine your submission, which may result in termination of proceedings or abandonment of the application or expiration of the patent.

The information provided by you in this form will be subject to the following routine uses:

1. The information on this form will be treated confidentially to the extent allowed under the Freedom of Information Act (5 U.S.C. 552) and the Privacy Act (5 U.S.C. 552a). Records from this system of records may be disclosed to the Department of Justice to determine whether the Freedom of Information Act requires disclosure of these records.

2. A record from this system of records may be disclosed, as a routine use, in the course of presenting evidence to a court, magistrate, or administrative tribunal, including disclosures to opposing counsel in the course of settlement negotiations.

3. A record in this system of records may be disclosed, as a routine use, to a Member of Congress submitting a request involving an individual, to whom the record pertains, when the individual has requested assistance from the Member with respect to the subject matter of the record.

4. A record in this system of records may be disclosed, as a routine use, to a contractor of the Agency having need for the information in order to perform a contract. Recipients of information shall be required to comply with the requirements of the Privacy Act of 1974, as amended, pursuant to 5 U.S.C. 552a(m).

5. A record related to an International Application filed under the Patent Cooperation Treaty in this system of records may be disclosed, as a routine use, to the International Bureau of the World Intellectual Property Organization, pursuant to the Patent Cooperation Treaty.

6. A record in this system of records may be disclosed, as a routine use, to another federal agency for purposes of National Security review (35 U.S.C. 181) and for review pursuant to the Atomic Energy Act (42 U.S.C. 218(c)).

7. A record from this system of records may be disclosed, as a routine use, to the Administrator, General Services, or his/her designee, during an inspection of records conducted by GSA as part of that agency's responsibility to recommend improvements in records management practices and programs, under authority of 44 U.S.C. 2904 and 2906. Such disclosure shall be made in accordance with the GSA regulations governing inspection of records for this purpose, and any other relevant (i.e., GSA or Commerce) directive. Such disclosure shall not be used to make determinations about individuals.

8. A record from this system of records may be disclosed, as a routine use, to the public after either publication of the application pursuant to 35 U.S.C. 122(b) or issuance of a patent pursuant to 35 U.S.C. 151. Further, a record may be disclosed, subject to the limitations of 37 CFR 1.14, as a routine use, to the public if the record was filed in an application which became abandoned or in which the proceedings were terminated and which application is referenced by either a published application, an application open to public inspections or an issued patent.

9. A record from this system of records may be disclosed, as a routine use, to a Federal, State, or local law enforcement agency, if the USPTO becomes aware of a violation or potential violation of law or regulation.

UNITED STATES PATENT AND TRADEMARK OFFICE

Commissioner for Patents
United States Patent and Trademark Office
P.O. Box 1450
Alexandria, VA 22313-1450
www.uspto.gov

In re Patent No. 6117178
Issue Date: September 12,2000
Application No. 08998808
Filed: December 29,1997
Attorney Docket No. 46171-013

:
:DECISION GRANTING PETITION
:UNDER 37 CFR 1.378(c)
:

This is a decision on the electronic petition, filed May 12,2009 ,under 37 CFR 1.378(c) to accept the unintentionally delayed payment of the 7.5 year maintenance fee for the above-identified patent.

The petition is **GRANTED**.

The maintenance fee is accepted, and the above-identified patent reinstated as of May 12,2009 .
This decision also constitutes notice that the fee has been accepted. An electronic copy of the petition and this decision has been created as an entry in the Image File Wrapper. Nevertheless, petitioner should print and retain an independent copy.

Telephone inquiries related to this electronic decision should be directed to the Electronic Business Center at 1-866-217-9197.

UNITED STATES PATENT AND TRADEMARK OFFICE

Commissioner for Patents
United States Patent and Trademark Office
P.O. Box 1450
Alexandria, VA 22313-1450
www.uspto.gov

KATTEN MUCHIN ROSENMAN LLP
575 MADISON AVENUE
NEW YORK NY 10022-2585

COPY MAILED

AUG 0 2 2005

OFFICE OF PETITIONS

ON PETITION

In re Application of :
Nobutsugu Fujino et al :
Application No. 08/999,308 :
Filed: December 29, 1997 :
Attorney Docket No. 100794-10585 :
FUJO14691 :

This is a decision on the petition, filed July 21, 2005, under 37 CFR 1.313(c)(2) to withdraw the above-identified application from issue after payment of the issue fee.

The petition is **GRANTED**.

The above-identified application is withdrawn from issue for consideration of a submission under 37 CFR 1.114 (request for continued examination). See 37 CFR 1.313(c)(2).

Petitioner is advised that the issue fee paid on June 21, 2005 in the above-identified application cannot be refunded. If, however, the above-identified application is again allowed, petitioner may request that it be applied towards the issue fee required by the new Notice of Allowance.[1]

Telephone inquiries should be directed to the undersigned at (571) 272-3208.

The examiner of Technology Center AU 2643 will consider the request for continued examination under 37 CFR 1.114.

Karen Creasy

Karen Creasy
Petitions Examiner
Office of Petitions
Office of the Deputy Commissioner
for Patent Examination Policy

---

[1] The request to apply the issue fee to the new Notice may be satisfied by completing and returning the new Issue Fee Transmittal Form PTOL-85(b), which includes the following language thereon: "Commissioner for Patents is requested to apply the Issue Fee and Publication Fee (if any) or re-apply any previously paid issue fee to the application identified above." Petitioner is advised that, whether a fee is indicated as being due or not, the Issue Fee Transmittal Form **must** be completed and timely submitted to avoid abandonment. Note the language in bold text on the first page of the Notice of Allowance and Fee(s) Due (PTOL-85).

UNITED STATES PATENT AND TRADEMARK OFFICE

COMMISSIONER FOR PATENTS
UNITED STATES PATENT AND TRADEMARK OFFICE
P.O. BOX 1450
ALEXANDRIA, VA 22313-1450
WWW.USPTO.GOV

Paper No.

HOWREY LLP - East
C/O IP DOCKETING DEPARTMENT
2941 FAIRVIEW PARK DR, SUITE 200
FALLS CHURCH VA 22042-2924

COPY MAILED

SEP 30 2009

OFFICE OF PETITIONS

In re Application of :
Van Der Lely :
Application No. 08/999,628 :
Patent No. 6,050,219 :
Filed: December 3, 1997 :
Issued: April 18, 2000 :
Attorney Docket No. 8553/126 :
Title: AN APPARATUS FOR :
MILKING ANIMALS :

DECISION ON PETITION
PURSUANT TO
37 C.F.R. § 1.28(c)

This is a notice regarding your submission of May 7, 2009, which is properly treated as a request for acceptance of a fee deficiency submission under 37 C.F.R § 1.28(c). On September 1, 1998, the Court of Appeals for the Federal Circuit held that 37 CFR § 1.28(c) is the sole provision governing the time for correction of the erroneous payment of the issue fee as a small entity. See DH Technology v. Synergystex International, Inc. 154 F.3d 1333, 47 USPQ2d 1865 (Fed. Cir. Sept. 1, 1998).

The Office no longer investigates or rejects original or reissue applications under 37 C.F.R. § 1.56. 1098 Off. Gaz. Pat. Office 502 (January 3, 1989). Therefore, nothing in this notice is intended to imply that an investigation was done.

37 C.F.R. § 1.28(c)(2)(ii) sets forth that the party submitting the deficient payment must include:

(a) Each particular type of fee that was erroneously paid as a small entity, (e.g., basic statutory filing fee, two-month extension of time fee) along with the current fee amount for a non-small entity;
(b) The small entity fee actually paid, and when;
(c) The deficiency owed amount (for each fee erroneously paid); and
(d) The total deficiency payment owed, which is the

> sum or total of the individual deficiency owed amounts set forth in paragraph (c)(2)(ii)(C) of this section.

Petitioner has identified the particular type of fee that was erroneously paid as a small entity, when the small entity fee was actually paid, the small entity fee that was actually paid, the deficiency owed amount, and the total deficiency payment owed.

Your fee deficiency submission under 37 C.F.R. § 1.28 is hereby accepted. The petition is **GRANTED** accordingly.

This patent is now listed as a large entity.

Telephone inquiries regarding *this decision* should be directed to the undersigned at (571) 272-3225.[1]

/Paul Shanoski/
Paul Shanoski
Senior Attorney
Office of Petitions

---

1 Petitioner will note that all practice before the Office should be in writing, and the action of the Office will be based exclusively on the written record in the Office. See 37 C.F.R. § 1.2. As such, Petitioner is reminded that no telephone discussion may be controlling or considered authority for Petitioner's further action(s).

UNITED STATES PATENT AND TRADEMARK OFFICE

UNITED STATES DEPARTMENT OF COMMERCE
United States Patent and Trademark Office
Address: COMMISSIONER FOR PATENTS
P.O. Box 1450
Alexandria, Virginia 22313-1450
www.uspto.gov

APPLICATION NUMBER	FILING OR 371(C) DATE	FIRST NAMED APPLICANT	ATTY. DOCKET NO./TITLE
08/999,628	12/03/1997	CORNELIS VAN DER LELY	8553/126

CONFIRMATION NO. 4136

POA ACCEPTANCE LETTER

22930
HOWREY LLP - East
C/O IP DOCKETING DEPARTMENT
2941 FAIRVIEW PARK DR, SUITE 200
FALLS CHURCH, VA 22042-2924

OC000000036161512

Date Mailed: 05/26/2009

NOTICE OF ACCEPTANCE OF POWER OF ATTORNEY

This is in response to the Power of Attorney filed 05/26/2009.

The Power of Attorney in this application is accepted. Correspondence in this application will be mailed to the above address as provided by 37 CFR 1.33.

/sharris/

Office of Data Management, Application Assistance Unit (571) 272-4000, or (571) 272-4200, or 1-888-786-0101

UNITED STATES PATENT AND TRADEMARK OFFICE

UNITED STATES DEPARTMENT OF COMMERCE
United States Patent and Trademark Office
Address: COMMISSIONER FOR PATENTS
P.O. Box 1450
Alexandria, Virginia 22313-1450
www.uspto.gov

APPLICATION NUMBER	FILING OR 371(C) DATE	FIRST NAMED APPLICANT	ATTY. DOCKET NO./TITLE
08/999,628	12/03/1997	CORNELIS VAN DER LELY	8553/126

CONFIRMATION NO. 4136

PENROSE LUCAS ALBRIGHT
P O BOX 2246
ARLINGTON, VA 222020246

POWER OF ATTORNEY NOTICE

OC000000035533637

Date Mailed: 05/26/2009

NOTICE REGARDING CHANGE OF POWER OF ATTORNEY

This is in response to the Power of Attorney filed 04/03/2009.

- The Power of Attorney to you in this application has been revoked by the assignee who has intervened as provided by 37 CFR 3.71. Future correspondence will be mailed to the new address of record(37 CFR 1.33).

/sharris/

Office of Data Management, Application Assistance Unit (571) 272-4000, or (571) 272-4200, or 1-888-786-0101

UNITED STATES PATENT AND TRADEMARK OFFICE

COMMISSIONER FOR PATENTS
UNITED STATES PATENT AND TRADEMARK OFFICE
P.O. BOX 1450
ALEXANDRIA, VA 22313-1450
WWW.USPTO.GOV

Paper No.

COPY MAILED

SEP 22 2009

OFFICE OF PETITIONS

HOWREY LLP - East
C/O IP DOCKETING DEPARTMENT
2941 FAIRVIEW PARK DR, SUITE 200
FALLS CHURCH VA 22042-2924

In re Application of :
Van Der Lely :
Application No. 08/999,632 : DECISION ON PETITION
Patent No. 5,970,911 : PURSUANT TO
Filed: January 22, 1998 : 37 C.F.R. § 1.28(c)
Issued: October 26, 1999 :
Attorney Docket No. 8553127 :
Title: CONSTRUCTION INCLUDING :
AN ACCOMMODATION FOR ANIMALS :

This is a notice regarding your submission of May 7, 2009, which is properly treated as a request for acceptance of a fee deficiency submission under 37 C.F.R § 1.28(c). On September 1, 1998, the Court of Appeals for the Federal Circuit held that 37 CFR § 1.28(c) is the sole provision governing the time for correction of the erroneous payment of the issue fee as a small entity. See DH Technology v. Synergystex International, Inc. 154 F.3d 1333, 47 USPQ2d 1865 (Fed. Cir. Sept. 1, 1998).

The Office no longer investigates or rejects original or reissue applications under 37 C.F.R. § 1.56. 1098 Off. Gaz. Pat. Office 502 (January 3, 1989). Therefore, nothing in this notice is intended to imply that an investigation was done.

37 C.F.R. § 1.28(c)(2)(ii) sets forth that the party submitting the deficient payment must include:

(a) Each particular type of fee that was erroneously paid as a small entity, (e.g., basic statutory filing fee, two-month extension of time fee) along with the current fee amount for a non-small entity;
(b) The small entity fee actually paid, and when;
(c) The deficiency owed amount (for each fee erroneously paid); and
(d) The total deficiency payment owed, which is the

> sum or total of the individual deficiency owed amounts set forth in paragraph (c)(2)(ii)(C) of this section.

Petitioner has identified the particular type of fee that was erroneously paid as a small entity, when the small entity fee was actually paid, the small entity fee that was actually paid, the deficiency owed amount, and the total deficiency payment owed.

Your fee deficiency submission under 37 C.F.R. § 1.28 is hereby accepted. The petition is **GRANTED** accordingly.

This patent is now listed as a large entity.

Telephone inquiries regarding *this decision* should be directed to the undersigned at (571) 272-3225.[1]

/Paul Shanoski/
Paul Shanoski
Senior Attorney
Office of Petitions

---

1 Petitioner will note that all practice before the Office should be in writing, and the action of the Office will be based exclusively on the written record in the Office. See 37 C.F.R. § 1.2. As such, Petitioner is reminded that no telephone discussion may be controlling or considered authority for Petitioner's further action(s).

UNITED STATES PATENT AND TRADEMARK OFFICE

COMMISSIONER FOR PATENTS
UNITED STATES PATENT AND TRADEMARK OFFICE
WASHINGTON, D.C. 20231
www.uspto.gov
DW 09-02

Paper No. 19

ANDREW J TOWNE
17 PENROSE BOULEVARD
COLORADO SPRINGS CO 80906

COPY MAILED

SEP 0 3 2002

OFFICE OF PETITIONS

In re Application of :
Andrew James Towne :
Application No. 08/999,657 : ON PETITION
Filed: 2 Septembe, 1997 :
For: HIIGH WING MONOPLANE AEROSPACE :
PLANE BASED FIGHTER :

This is a decision on the petition filed on 10 June, 2002, which, in the absence of a fee, is being treated as a petition under 37 CFR 1.181 to withdraw the holding of abandonment.[1]

The petition is **DISMISSED**.

Any request for reconsideration of this decision must be submitted within TWO (2) MONTHS from the mail date of this decision. Extensions of time under 37 CFR 1.136(a) are permitted. The reconsideration request should include a cover letter entitled "Renewed Petition to under 37 CFR 1.137(b)." This is not a final agency action.

This application became abandoned on 10 January, 2002, for failure to submit a proper response to the final Office action mailed on 9 October, 2001, which set a three (3) month shortened statutory period for reply. A reply was filed on 28 December, 2001, but that reply was found not to place the case in *prima facie* case for allowance, and an Advisory Action was mailed on 23 January, 2002. An additional reply was filed on 18 March, 2002, but, lacking the requisite extension of time, the reply was untimely. Notice of Abandonment was mailed on 22 May, 2002.

The present petition was accompanied by a check for $845.00 for "continuation-in-part fee and small entity issue fee". No amount designated as a petition fee was enclosed.

---

[1]In the absence of the petition fee, which is required by law, the PTO can only treat the instant petition as a (feeless 1.181) petition to withdraw the holding of abandonment. See Krahn v. Comm'r, 15 USPQ2d 1823, 1825 (E.D. Va. 1990).

In the absence of the petition fee, which is required by law, the PTO can only treat the instant petition as a (feeless 1.181) petition to withdraw the holding of abandonment.[2] The PTO will not reach the merits of any petition under 37 CFR 1.137 lacking the requisite petition fee.[3] As petitioner has not alleged circumstances which would warrant the withdrawal of the holding of abandonment, the petition will be dismissed.

It is also noted that the petition filed on 10 June, 2002, does not identify the reply required by 37 CFR 1.137(b)(1). Petitioner must either (a) submit the required reply with any renewed petition or, if the reply was previously filed, (b) identify the previously filed reply in the renewed petition.

Further correspondence with respect to this matter should be addressed as follows:

By mail: Commissioner of Patents and Trademarks
Box DAC
Washington, D.C. 20231

By FAX: (703)308-6916
Attn: Office of Petitions

By hand: Crystal Plaza Four, Suite CP4-3C23
2201 South Clark Place
Arlington, VA 22202

Telephone inquiries concerning this matter may be directed to the undersigned at (703)308-6918.

DIWood

Douglas I. Wood
Senior Petitions Attorney
Office of Petitions
Office of the Deputy Commissioner
for Patent Examination Policy

---

[2] See Krahn v. Comm'r, 15 USPQ2d 1823, 1825 (E.D. Va. 1990).

[3] MPEP 711.03(c); see 35 U.S.C. 41(a)(7).

UNITED STATES PATENT AND TRADEMARK OFFICE

COMMISSIONER FOR PATENTS
UNITED STATES PATENT AND TRADEMARK OFFICE
WASHINGTON, D.C. 20231
www.uspto.gov
DW 10-02

Paper No. 21

ANDREW JAMES TOWNE
17 PENROSE BOULEVARD
COLORADO SPRINGS CO 80906

COPY MAILED

OCT 0 2 2002

OFFICE OF PETITIONS

In re Application of	:	
Andrew James Towne	:	
Application No. 08/999,657	:	ON PETITION
Filed: 2 September, 1997	:	
For: HIIGH WING MONOPLANE AEROSPACE	:	
PLANE BASED FIGHTER.	:	

This is a decision on the petition under 37 CFR 1.137(b),[1] filed on 10 June, 2002, to revive the above-identified application.

The petition is **DISMISSED**.

Any request for reconsideration of this decision must be submitted within TWO (2) MONTHS from the mail date of this decision. Extensions of time under 37 CFR 1.136(a) are

---

[1]Effective December 1, 1997, the provisions of 37 CFR 1.137(b) now provide that where the delay in reply was unintentional, a petition may be filed to revive an abandoned application or a lapsed patent pursuant to 37 CFR 1.137(b). A grantable petition filed under the provisions of 37 CFR 1.137(b) must be accompanied by:

(1) the required reply, unless previously filed. In a nonprovisional application abandoned for failure to prosecute, the required reply may be met by the filing of a continuing application. In a nonprovisional application filed on or after June 8, 1995, and abandoned for failure to prosecute, the required reply may also be met by the filing of a request for continued examination in compliance with § 1.114. In an application or patent, abandoned or lapsed for failure to pay the issue fee or any portion thereof, the required reply must be the payment of the issue fee or any outstanding balance thereof. In an application abandoned for failure to pay the publication fee, the required reply must include payment of the publication fee.

(2) the petition fee as set forth in 37 CFR 1.17(m);

(3) a statement that the entire delay in filing the required reply from the due date for the reply until the filing of a grantable petition pursuant to 37 CFR 1.137(b) was unintentional. The Commissioner may required additional information where there is a question whether the delay was unintentional; and

(4) any terminal disclaimer (and fee as set forth in 37 CFR 1.20(d)) required pursuant to 37 CFR 1.137(c)).

permitted. The reconsideration request should include a cover letter entitled "Renewed Petition Under 37 CFR 1.137(b)." This is not a final agency decision.

This application became abandoned on 10 January, 2002, for failure to submit a proper response to the final Office action mailed on 9 October, 2001, which set a three (3) month shortened statutory period for reply. A reply was filed on 28 December, 2001, but that reply was found not to place the case in *prima facie* case for allowance, and an Advisory Action was mailed on 23 January, 2002. An additional reply was filed on 18 March, 2002, but, lacking the requisite extension of time, the reply was untimely. Notice of Abandonment was mailed on 22 May, 2002. The petition filed on 10 June, 2002, and treated under 37 CFR 1.181, was dismissed on 3 September, 2002. On 26 September, 2002, petitioners submitted the petition fee required by 37 CFR 1.137(b) and requested that the application be revived.

The petition lacks the required reply. The only proper reply to a final Office action is an amendment placing the application in *prima facie* condition for allowance, a Notice of Appeal accompanied by the requisite fee, a Request for Continued Examination (RCE) accompanied by a proper submission, or a continuing application. Although the petition filed on 10 June, 2002, noted that $845.00 had been previously submitted, and made reference to the issue fee and a continuation-in-part, no issue fee is due at this time as the application has not been allowed. Additionally, a review of USPTO records does not disclose that a continuation-in-part application was ever filed. As such, petitioner has not filed a proper reply to the final Office action mailed on 9 October, 2001. Petitioner must submit a proper reply to the final Office action mailed on 9 October, 2001, with any renewed petition.

Additionally, petitioners must provide a statement that the entire delay in filing the required reply from the due date for the reply until the filing of a grantable petition pursuant to 37 CFR 1.137(b) was unintentional. Attached is a copy of the USPTO Official form for submission of a petition under 37 CFR 1.137(b). It is recommended that petitioner use the attached form when filing a renewed petition under 37 CFR 1.137(b).

Further correspondence with respect to this matter should be addressed as follows:

By mail: Commissioner of Patents and Trademarks
Box DAC
Washington, D.C. 20231
By FAX: (703)308-6916
Attn: Office of Petitions

By hand: Crystal Plaza Four, Suite CP4-3C23
2201 South Clark Place
Arlington, VA 22202

Telephone inquiries concerning this matter may be directed to the undersigned at (703)308-6918.

D Wood

Douglas I. Wood
Senior Petitions Attorney
Office of Petitions
Office of the Deputy Commissioner
for Patent Examination Policy

Encl: PTO/SB/64
Privacy Act Statement

UNITED STATES PATENT AND TRADEMARK OFFICE

COMMISSIONER FOR PATENTS
UNITED STATES PATENT AND TRADEMARK OFFICE
WASHINGTON, D.C. 20231
www.uspto.gov
DW 11-02

Paper No. 23

ANDREW JAMES TOWNE
17 PENROSE BOULEVARD
COLORADO SPRINGS CO 80906

COPY MAILED

DEC 0 2 2002

OFFICE OF PETITIONS

In re Application of :
Andrew James Towne :
Application No. 08/999,657 :
Filed: 2 September, 1997 :
For: HIIGH WING MONOPLANE AEROSPACE :
PLANE BASED FIGHTER. :

ON PETITION

This is a decision on the renewed petition under 37 CFR 1.137(b),[1] filed on 21 November, 2002, to revive the above-identified application.

The petition is again **DISMISSED**.

Any request for reconsideration of this decision must be submitted within TWO (2) MONTHS from the mail date of this decision. Extensions of time under 37 CFR 1.136(a) are permitted. The reconsideration request should include a cover

---

[1]Effective December 1, 1997, the provisions of 37 CFR 1.137(b) now provide that where the delay in reply was unintentional, a petition may be filed to revive an abandoned application or a lapsed patent pursuant to 37 CFR 1.137(b). A grantable petition filed under the provisions of 37 CFR 1.137(b) must be accompanied by:

(1) the required reply, unless previously filed. In a nonprovisional application abandoned for failure to prosecute, the required reply may be met by the filing of a continuing application. In a nonprovisional application filed on or after June 8, 1995, and abandoned for failure to prosecute, the required reply may also be met by the filing of a request for continued examination in compliance with § 1.114. In an application or patent, abandoned or lapsed for failure to pay the issue fee or any portion thereof, the required reply must be the payment of the issue fee or any outstanding balance thereof. In an application abandoned for failure to pay the publication fee, the required reply must include payment of the publication fee.

(2) the petition fee as set forth in 37 CFR 1.17(m);

(3) a statement that the entire delay in filing the required reply from the due date for the reply until the filing of a grantable petition pursuant to 37 CFR 1.137(b) was unintentional. The Commissioner may required additional information where there is a question whether the delay was unintentional; and

(4) any terminal disclaimer (and fee as set forth in 37 CFR 1.20(d)) required pursuant to 37 CFR 1.137(c)).

letter entitled "Renewed Petition Under 37 CFR 1.137(b)." This is not a final agency decision.

This application became abandoned on 10 January, 2002, for failure to submit a proper response to the final Office action mailed on 9 October, 2001, which set a three (3) month shortened statutory period for reply. A reply was filed on 28 December, 2001, but that reply was found not to place the case in *prima facie* case for allowance, and an Advisory Action was mailed on 23 January, 2002. An additional reply was filed on 18 March, 2002, but, lacking the requisite extension of time, the reply was untimely. Notice of Abandonment was mailed on 22 May, 2002. The petition filed on 10 June, 2002, and treated under 37 CFR 1.181, was dismissed on 3 September, 2002. On 26 September, 2002, petitioners submitted the petition fee required by 37 CFR 1.137(b) and requested that the application be revived. The petition was dismissed on 2 October, 2002.

Although petitioner has provided a proper statement of unintentional delay, the petition still lacks the required reply. The only proper reply to a final Office action is an amendment placing the application in *prima facie* condition for allowance, a Notice of Appeal accompanied by the requisite fee, a Request for Continued Examination (RCE) accompanied by a proper submission, or a continuing application.

Petitioner additionally avers that the delay was "due to applicant's insufficient understanding of the continuation-in-part process." In this regard, it is recommended that petitioner file a renewed petition accompanied by a proper reply to the final Office action mailed 9 October, 2001, as outlined above. As previously stated, the application <u>cannot</u> be revived unless and until a proper reply to the final Office action is filed.

Further correspondence with respect to this matter should be addressed as follows:

By mail: Commissioner of Patents and Trademarks
Box DAC
Washington, D.C. 20231
By FAX: (703)308-6916
Attn: Office of Petitions

By hand: Crystal Plaza Four, Suite CP4-3C23
2201 South Clark Place
Arlington, VA 22202

Telephone inquiries concerning this matter may be directed to the undersigned at (703)308-6918.

Douglas I. Wood
Senior Petitions Attorney
Office of Petitions
Office of the Deputy Commissioner
for Patent Examination Policy

UNITED STATES PATENT AND TRADEMARK OFFICE

COMMISSIONER FOR PATENTS
UNITED STATES PATENT AND TRADEMARK OFFICE
WASHINGTON, D.C. 20231
www.uspto.gov
DW 01-03

Paper No. 25

ANDREW JAMES TOWNE
17 PENROSE BOULEVARD
COLORADO SPRINGS CO 80906

COPY MAILED

JAN 03 2003

OFFICE OF PETITIONS

In re Application of	:	
Andrew James Towne	:	
Application No. 08/999,657	:	ON PETITION
Filed: 2 September, 1997	:	
For: HIIGH WING MONOPLANE AEROSPACE	:	
PLANE BASED FIGHTER.	:	

This is a decision on the twice renewed petition under 37 CFR 1.137(b),[1] filed by facsimile on 18 December, 2002, to revive the above-identified application.

The petition is again **DISMISSED**.

Any request for reconsideration of this decision must be submitted within TWO (2) MONTHS from the mail date of this decision. Extensions of time under 37 CFR 1.136(a) are permitted. The reconsideration request should include a cover

---

[1]Effective December 1, 1997, the provisions of 37 CFR 1.137(b) now provide that where the delay in reply was unintentional, a petition may be filed to revive an abandoned application or a lapsed patent pursuant to 37 CFR 1.137(b). A grantable petition filed under the provisions of 37 CFR 1.137(b) must be accompanied by:

(1) the required reply, unless previously filed. In a nonprovisional application abandoned for failure to prosecute, the required reply may be met by the filing of a continuing application. In a nonprovisional application filed on or after June 8, 1995, and abandoned for failure to prosecute, the required reply may also be met by the filing of a request for continued examination in compliance with § 1.114. In an application or patent, abandoned or lapsed for failure to pay the issue fee or any portion thereof, the required reply must be the payment of the issue fee or any outstanding balance thereof. In an application abandoned for failure to pay the publication fee, the required reply must include payment of the publication fee.

(2) the petition fee as set forth in 37 CFR 1.17(m);

(3) a statement that the entire delay in filing the required reply from the due date for the reply until the filing of a grantable petition pursuant to 37 CFR 1.137(b) was unintentional. The Commissioner may required additional information where there is a question whether the delay was unintentional; and

(4) any terminal disclaimer (and fee as set forth in 37 CFR 1.20(d)) required pursuant to 37 CFR 1.137(c)).

letter entitled "Renewed Petition Under 37 CFR 1.137(b)." This is not a final agency decision.

This application became abandoned on 10 January, 2002, for failure to submit a proper response to the final Office action mailed on 9 October, 2001, which set a three (3) month shortened statutory period for reply. A reply was filed on 28 December, 2001, but that reply was found not to place the case in *prima facie* case for allowance, and an Advisory Action was mailed on 23 January, 2002. An additional reply was filed on 18 March, 2002, but, lacking the requisite extension of time, the reply was untimely. Notice of Abandonment was mailed on 22 May, 2002. The petition filed on 10 June, 2002, and treated under 37 CFR 1.181, was dismissed on 3 September, 2002. On 26 September, 2002, petitioners submitted the petition fee required by 37 CFR 1.137(b) and requested that the application be revived. The petition was dismissed on 2 October, 2002. The renewed petition filed on 21 November, 2002, was dismissed in a decision mailed on 2 December, 2002.

The petition lacks the required reply. The petition is accompanied by the first page of a Continued Prosecution Application (CPA) Request Transmittal. The second page of the CPA Request Transmittal, including the signature of the applicant, is missing however. In order for applicant to file a CPA, a complete CPA Request Transmittal, including the signature of the applicant, must be filed. A copy of the complete CPA Request Transmittal form, including the Receipt for Facsimile Transmitted CPA, has been included for applicant's convenience.

Applicant is also informed that USPTO fees were revised as of 1 January, 2003. As such, the basic filing fee for a CPA (small entity) is now $375.00. A copy of the current USPTO fee schedule is included for petitioner's convenience. If petitioner wishes to have any fee previously paid in error but not refunded applied to the CPA filing fee, petitioner should so state in any renewed petition.

Further correspondence with respect to this matter should be addressed as follows:

By mail: Commissioner of Patents and Trademarks
Box DAC
Washington, D.C. 20231
By FAX: (703)308-6916
Attn: Office of Petitions

By hand: Crystal Plaza Four, Suite CP4-3C23
2201 South Clark Place
Arlington, VA 22202

Telephone inquiries concerning this matter may be directed to the undersigned at (703)308-6918.

D Wood

Douglas I. Wood
Senior Petitions Attorney
Office of Petitions
Office of the Deputy Commissioner
for Patent Examination Policy

Encl: Form PTO/SB/29
Form PTO/SB/29a
Form PTO/SB/64
USPTO Fees - FY 2003
Privacy Act Notification Form

UNITED STATES PATENT AND TRADEMARK OFFICE

COMMISSIONER FOR PATENTS
UNITED STATES PATENT AND TRADEMARK OFFICE
WASHINGTON, D.C. 20231
www.uspto.gov
DW 01-03

Paper No. 27

ANDREW JAMES TOWNE
17 PENROSE BOULEVARD
COLORADO SPRINGS CO 80906

COPY MAILED

JAN 3 1 2003

OFFICE OF PETITIONS

In re Application of	:	
Andrew James Towne	:	CORRECTED DECISION
Application No. 08/999,657	:	ON PETITION
Filed: 2 September, 1997	:	
For: HIIGH WING MONOPLANE AEROSPACE	:	
PLANE BASED FIGHTER.	:	

This is a corrected decision on the twice renewed petition under 37 CFR 1.137(b),[1] filed by facsimile on 18 December, 2002, to revive the above-identified application.

The petition is **GRANTED**.

This application became abandoned on 10 January, 2002, for failure to submit a proper response to the final Office action mailed on 9 October, 2001, which set a three (3) month shortened statutory period for reply. A reply was filed on 28 December,

---

[1]Effective December 1, 1997, the provisions of 37 CFR 1.137(b) now provide that where the delay in reply was unintentional, a petition may be filed to revive an abandoned application or a lapsed patent pursuant to 37 CFR 1.137(b). A grantable petition filed under the provisions of 37 CFR 1.137(b) must be accompanied by:

(1) the required reply, unless previously filed. In a nonprovisional application abandoned for failure to prosecute, the required reply may be met by the filing of a continuing application. In a nonprovisional application filed on or after June 8, 1995, and abandoned for failure to prosecute, the required reply may also be met by the filing of a request for continued examination in compliance with § 1.114. In an application or patent, abandoned or lapsed for failure to pay the issue fee or any portion thereof, the required reply must be the payment of the issue fee or any outstanding balance thereof. In an application abandoned for failure to pay the publication fee, the required reply must include payment of the publication fee.

(2) the petition fee as set forth in 37 CFR 1.17(m);

(3) a statement that the entire delay in filing the required reply from the due date for the reply until the filing of a grantable petition pursuant to 37 CFR 1.137(b) was unintentional. The Commissioner may required additional information where there is a question whether the delay was unintentional; and

(4) any terminal disclaimer (and fee as set forth in 37 CFR 1.20(d)) required pursuant to 37 CFR 1.137(c)).

2001, but that reply was found not to place the case in *prima facie* case for allowance, and an Advisory Action was mailed on 23 January, 2002. An additional reply was filed on 18 March, 2002, but, lacking the requisite extension of time, the reply was untimely. Notice of Abandonment was mailed on 22 May, 2002. The petition filed on 10 June, 2002, and treated under 37 CFR 1.181, was dismissed on 3 September, 2002. On 26 September, 2002, petitioners submitted the petition fee required by 37 CFR 1.137(b) and requested that the application be revived. The petition was dismissed on 2 October, 2002. The renewed petition filed on 21 November, 2002, was dismissed in a decision mailed on 2 December, 2002. The renewed petition filed on 18 December, 2002, was dismissed in a decision mailed on 3 January, 2003, because a complete Continued Prosecution Application (CPA) Request Transmittal had not been received.

Pages 1 and 2 of the CPA Request Transmittal Filed by facsimile on 18 December, 2002, have recently been matched with the file. As such, petitioner has filed a proper reply to the final Office action mailed on 9 October, 2001.

$370.00 of the $845.00 paid on 18 March, 2002, has been applied to the CPA filing fee (small entity). As the petition filed by facsimile on 21 November, 2002, states that petitioner asserts small entity status, small entity status will apply.

Since this application is revived for purposes of continuity only with the Continued Prosecution Application (CPA) filed on 18 December, 2002, and since continuity has been established by this decision reviving the application, the application is again abandoned in favor of the above-referenced CPA.

This application is being forwarded to Technology Center 3600 for processing of the CPA filed on 18 December, 2000.

Telephone inquiries concerning this matter may be directed to the undersigned at (703)308-6918.

D Wood

Douglas I. Wood
Senior Petitions Attorney
Office of Petitions

UNITED STATES PATENT AND TRADEMARK OFFICE

Commissioner for Patents
United States Patent and Trademark Office
P.O. Box 1450
Alexandria, VA 22313-1450
www.uspto.gov

ANDREW J. TOWNE
17 PENROSE BOULEVARD
COLORADO SPRINGS, CO 80906

COPY MAILED

MAR 26 2007

OFFICE OF PETITIONS

In re Application of	:	
Andrew James Towne	:	
Application No. 08/999,657	:	ON PETITION
Filed: September 2, 1997	:	
For: HIGH WING MONOPLANE AEROSPACE PLANE BASED FIGHTER	:	

This is a decision on the petition under the unintentional provisions of 37 CFR 1.137(b), filed January 16, 2007, to revive the above-identified application.

The petition is **DISMISSED**.

Any request for reconsideration of this decision must be submitted within TWO (2) MONTHS from the mail date of this decision. Extensions of time under 37 CFR 1.136(a) are permitted. The reconsideration request should include a cover letter entitled "Renewed Petition under 37 CFR 1.137(b)." This is **not** a final agency action within the meaning of 5 U.S.C. § 704.

This application became abandoned for failure to timely pay the issue and publication fees on or before April 27, 2006, a required by the Notice of Allowance and Fee(s) Due, mailed January 27, 2006. A Notice of Abandonment was mailed on December 1, 2006.

A grantable petition under 37 CFR 1.137(b) must be accompanied by: (1) the required reply, unless previously filed; (2) the petition fee as set forth in 37 CFR 1.17(m); (3) a statement that the entire delay in filing the required reply from the due date for the reply until the filing of a grantable petition pursuant to 37 CFR 1.137(b) was unintentional; and (4) any terminal disclaimer (and fee as set forth in 37 CFR 1.20(d)) required by 37 CFR 1.137(d). Where there is a question as to whether either the abandonment or the delay in filing a petition under 37 CFR 1.137 was unintentional, the Director may require additional information. See MPEP 711.03(c)(II)(C). The instant petition lacks items (1) and (2).

As to item (1) above, the issue and publication fees were initially tendered on February 13, 2006. However, the check for these fees was returned as unpaid. Therefore, a $50 returned check fee is now due.

As to item (2), the statute at 35 U.S.C. 41(a)(7) requires payment of a fee for revival of an application. The petition was not accompanied by the $750 required fee for the petition to revive.

Accordingly, before revival of this application can be effected, the $50 returned check fee and the $750 petition fee must be submitted, along with a renewed petition under 37 CFR 1.137(b).

It appears that, in reviewing the finance records for this file, there is an excess of $280 fees paid which have not been applied towards any paper requiring a fee. Accordingly, petitioner may request that this $280 in excess fees paid be applied towards the $50 returned check fee and the $750 petition fee due, leaving a balance due of $520.

The rule at 37 CFR 1.137(b)(3) requires a statement that "the entire delay in filing the required reply from the due date for the reply until the filing of a grantable petition pursuant to 37 CFR 1.137(b) was unintentional." Since the statement appearing in the petition varies from the language required by 37 CFR 1.137(b)(3), the statement is being construed as the required statement. Petitioner must notify the Office if this is **not** a correct reading of the statement appearing in the petition.

Further correspondence with respect to this matter should be addressed as follows:

By Mail: Mail Stop PETITION
Commissioner for Patents
P. O. Box 1450
Alexandria, VA 22313-1450

By hand: U. S. Patent and Trademark Office
Customer Service Window, Mail Stop Petitions
Randolph Building
401 Dulany Street
Alexandria, VA 22314

The centralized facsimile number is **(571) 273-8300.**

Telephone inquiries concerning this decision should be directed to the undersigned at (571) 272-3218.

Frances Hicks
Petitions Examiner
Office of Petitions

UNITED STATES PATENT AND TRADEMARK OFFICE

Commissioner for Patents
United States Patent and Trademark Office
P.O. Box 1450
Alexandria, VA 22313-1450
www.uspto.gov

ANDREW J. TOWNE
17 PENROSE BOULEVARD
COLORADO SPRINGS, CO 80906

COPY MAILED

JUN 05 2007

OFFICE OF PETITIONS

In re Application of :
Andrew James Towne :
Application No. 08/999,657 :
Filed: September 2, 1997 :
For: HIGH WING MONOPLANE :
AEROSPACE PLANE BASED FIGHTER

DECISION ON PETITION

This is a decision on the RENEWED petition under 37 CFR 1.137(b), filed April 17, 2007, to revive the above-identified application.

The petition is **GRANTED**.

This application became abandoned for failure to timely pay the issue and publication fees on or before April 27, 2006, as required by the Notice of Allowance and Fee(s) Due, mailed January 27, 2006. Accordingly, the date of abandonment of this application is April 28, 2006. A Notice of Abandonment was mailed on December 1, 2006.

The petition satisfies the requirements of 37 CFR 1.137(b) in that petitioner has supplied (1) the reply in the form of payment of the issue fee of $700 and the publication fee of $300, (2) the petition fee of $750 and returned check fee of $50, and (3) a proper statement of unintentional delay. Accordingly, the issue and publication fees are accepted as being unintentionally delayed.

Telephone inquiries concerning this decision should be directed to the undersigned at (571) 272-3218.

This application is being referred to Publishing Division for appropriate processing in accordance with this decision on petition.

Frances Hicks
Petitions Examiner
Office of Petitions

UNITED STATES PATENT AND TRADEMARK OFFICE

Commissioner for Patents
United States Patent and Trademark Office
P.O. Box 1450
Alexandria, VA 22313-1450
www.uspto.gov

DANIEL P. MORRIS
IBM CORPORATION
INTELLECTUAL PROPERTY LAW DEPARTMENT
P O BOX 218
YORKTOWN HEIGHTS, NY 10598

COPY MAILED
AUG 10 2006
OFFICE OF PETITIONS

In re Application of	:	
Evan George Colgan et al	:	
Application No. 08/999,663	:	DECISION GRANTING PETITION
Filed: December 18, 1997	:	UNDER 37 CFR 1.137(b)
Attorney Docket No. Y0994-065XX	:	

This is a decision on the petition under 37 CFR 1.137(b), filed June 15, 2006, to revive the above-identified application.

The petition is **GRANTED**.

The above-identified application became abandoned for failure to reply within the meaning of 37 CFR 1.113 in a timely manner to the final Office action mailed September 7, 2005, which set a shortened statutory period for reply of three (3) months. No extensions of time under the provisions of 37 CFR 1.136(a) were obtained. Accordingly, the above-identified application became abandoned on December 8, 2005. A Notice of Abandonment was mailed on June 1, 2006.

The petition satisfies the conditions for revival pursuant to the provisions of 37 CFR 1.137(b) in that (1) the reply in the form of a Request for Continued Examination (RCE) and submission as required by 37 CFR 1.114; (2) the $1,500 petition fee; and (3) the required statement of unintentional delay have been received. Accordingly, the reply to the final Office action of September 7, 2005 is accepted as having been unintentionally delayed.

Telephone inquiries concerning this decision should be directed to the undersigned at (571) 272-3218.

This matter is being referred to Technology Center AU 2871 for processing the RCE and for appropriate action on the reply received with the petition on June 15, 2006.

Frances Hicks
Petitions Examiner
Office of Petitions

UNITED STATES DEPARTMENT OF COMMERCE
Patent and Trademark Office
ASSISTANT SECRETARY AND COMMISSIONER
OF PATENTS AND TRADEMARKS
Washington, D.C. 20231

#20

MAILED

JAN 1 9 2001

Office of Director
Technology Center 1600

BERT J LEWEN
DARBY & DARBY
805 THIRD AVENUE
NEW YORK , NY 10022

In re Application of
Fiona Catherine Millar
Serial No.: 08/999,752
Filed: June 4, 1997
Attorney Docket No.: 7755/0D276

: WITHDRAWAL OF ABANDONMENT

This is in response to applicant's' petition under 37 CFR 1.181, filed July 24, 2000, requesting withdrawal of the holding of abandonment. The delay in acting on this petition is regretted.

A review of the file history shows that the examiner mailed a Final Office action to applicant on December 2, 1999, setting a three month shortened statutory time period for reply. Applicant's representative held an interview with SPE Thurman Page on February 24, 2000, (prior to the expiration of the three month shortened statutory period for reply) the result of which was an agreement by SPE Page to vacate (withdraw) the outstanding Office action and send a new Office action in due course. When no formal letter of withdrawal was received by applicant within a reasonable period of time SPE Page was again contacted and eventually, on June 1, 2000, sent a facsimile transmission to applicant's representative clearly stating that "the Final Rejection dated December 02, 2000 (sic - 1999) is hereby VACATED and an action on the merits will follow in due course." This paper has not been placed in the file wrapper and is not of record on the contents of the file wrapper. However, applicant's copy thereof accurately reflects the intent of SPE Page with respect to the conduct of prosecution in this application. Subsequently, on June 21, 2000, a Notice of Abandonment having attached to it the Interview Summary Form from the February 24, 2000, interview indicating that the Final Rejection would be vacated was mailed to applicant. From the evidence of record it is clear that this application was abandoned erroneously by the Office. The error is regretted.

Applicants' petition is **GRANTED**. **The application is restored to pending status with the mailing of this decision.**

The application will be forwarded to the examiner for further consideration.

Should there be any questions with regard to this letter please contact William R. Dixon, Jr. by letter addressed to the Director, Technology Center 1600, Washington, DC 20231, or by telephone at (703) 308-3824 or by facsimile transmission at (703) 308-7230.

John Doll
Director, Technology Center 1600

UNITED STATES PATENT AND TRADEMARK OFFICE

Commissioner for Patents
United States Patent and Trademark Office
P.O. Box 1450
Alexandria, VA 22313-1450
www.uspto.gov

LERNER, DAVID, LITTENBERG,
KRUMHOLZ & MENTLIK
600 SOUTH AVENUE WEST
WESTFIELD NJ 07090

COPY MAILED

APR 16 2007

OFFICE OF PETITIONS

In re Application of
Millar
Application No. 08/999,752
Filed: June 4, 1997
Title: Medicinal Aerosols and Methods of Delivery Thereof

ON PETITION

This is a decision on the petition under 37 CFR 1.181 to withdraw the holding of abandonment, filed October 17, 2006.

The petition to withdraw the holding of abandonment is **Dismissed**.

Any request for reconsideration should be filed within **TWO MONTHS** of the mailing date of this decision in order to be considered timely. 37 CFR 1.181(f). This time period may not be extended pursuant to 37 CFR 1.136.

This application was held abandoned November 23, 2003 for failure to timely reply to the final Office Action mailed on August 22, 2002. The final Office Action set a three (3) month extendable time period for reply. A Notice of Abandonment was mailed October 5, 2004.

Petitioner asserts that a reply to the final Office Action was timely submitted on February 24, 2003. As evidence, petitioner has submitted a copy of the reply which contains a certificate of mailing (37 CFR 1.10), a copy of the reply in the form of a request for Continued Prosecution Application (CPA), and a date stamped post card receipt.

However, in order to make the reply timely a three month extension of time was required. Although a request for a three month extension of time was submitted, a review of the record shows that deposit account 50-0943 contained insufficient funds. Thus the CPA was untimely.

Accordingly the application was properly held abandoned.

Further correspondence with respect to this matter should be addressed as follows:

By mail:	Mail Stop Petition Commissioner for Patents P.O. Box 1450 Alexandria, VA 22313-1450
By facsimile:	(571) 273-8300
By delivery service: (FedEx, UPS, DHL, etc.)	U.S. Patent and Trademark Office Customer Service Window, Randolph Building 401 Dulany Street Alexandria, VA 22314

Telephone inquiries concerning this matter should be directed to the undersigned at (571) 272-3215.

Charlema R. Grant

Charlema R. Grant
Petitions Attorney
Office of Petitions

UNITED STATES PATENT AND TRADEMARK OFFICE

Commissioner for Patents
United States Patent and Trademark Office
P.O. Box 1450
Alexandria, VA 22313-1450
www.uspto.gov

LERNER, DAVID, LITTENBERG,
KRUMHOLZ & MENTLIK
600 SOUTH AVENUE WEST
WESTFIELD NJ 07090

COPY MAILED

DEC 18 2007

OFFICE OF PETITIONS

In re Application of :
Fiona Millar :
Application No. 08/999,752 :
Filed: June 4, 1997 :
Attorney Docket No. 7755/0D276 :

ON PETITION

This is a decision on the petition under the unintentional provisions of 37 CFR 1.137(b), filed May 21, 2007, to revive the above-identified application.

The petition is **DISMISSED**.

Any request for reconsideration of this decision must be submitted within TWO (2) MONTHS from the mail date of this decision. Extensions of time under 37 CFR 1.136(a) are permitted. The reconsideration request should include a cover letter entitled "Renewed Petition under 37 CFR 1.137(b)." This is **not** a final agency action within the meaning of 5 U.S.C. § 704.

This application was held abandoned November 23, 2003 for failure to timely reply to the final Office Action mailed on August 22, 2002. The final Office Action set a three (3) month extendable time period for reply. A Notice of Abandonment was mailed October 5, 2004. A petition under 37 CFR 1.181 was dismissed April 16, 2007.

A grantable petition under 37 CFR 1.137(b) must be accompanied by: (1) the required reply, unless previously filed; (2) the petition fee as set forth in 37 CFR 1.17(m); (3) a statement that the entire delay in filing the required reply from the due date for the reply until the filing of a grantable petition pursuant to 37 CFR 1.137(b) was unintentional; and (4) any terminal disclaimer (and fee as set forth in 37 CFR 1.20(d)) required by 37 CFR 1.137(d). Where there is a question as to whether either the abandonment or the delay in filing a petition under 37 CFR 1.137 was unintentional, the Director may require additional information. See MPEP 711.03(c)(II)(C) and (D). The instant petition lacks item(s) 1.

Petitioner seeks the entry of a CPA and a three month extension of time as the reply to the final Office action. 37 CFR 1.53(d)(1) has been amended to provide that CPA practice under 37 CFR 1.53(d) does not apply to utility and plant applications. Effective July 14, 2003, a CPA may only be filed if the prior nonprovisional application is a design application that is complete as defined by 37 CFR 1.51(b).

If the CPA does not satisfy the requirements of 37 CFR 1.114 to be a proper RCE (e.g., lacks a submission under 37 CFR 1.114(b), or is not accompanied by the fee set forth in 37 CFR 1.17(e)), the improper CPA will be treated as an improper RCE, and the time period set in the last Office action (or notice of allowance) will continue to run. If the time period (considering any available extension under 37 CFR 1.136(a)) has expired, the applicant will need to file a petition under 37 CFR 1.137 (with the lacking submission under 37 CFR 1.114(b) or fee set forth in 37 CFR 1.17(e)) to revive the abandoned application.

The request for CPA submitted on February 24, 2003 was not entered because the CPA filing fee and required three month extension of time were not submitted. The deposit account contained insufficient funds to cover the fees. Accordingly, petitioner cannot rely on the previously submitted CPA to overcome the July 14, 2003 date bar.

The proposed reply required for consideration of a petition to revive must be a Notice of Appeal (and appeal fee required by 37 CFR 41.20(b)(2)), an amendment that *prima facie* places the application in condition for allowance, a Request for Continued Examination (RCE) and submission (37 CFR 1.114), or the filing of a continuing application under 37 CFR 1.53(b). *See* MPEP 711.03(c)(III)(A)(2).

Further correspondence with respect to this matter should be addressed as follows:

By Mail: Mail Stop PETITION
Commissioner for Patents
P. O. Box 1450
Alexandria, VA 22313-1450

By hand: U. S. Patent and Trademark Office
Customer Service Window, Mail Stop Petitions
Randolph Building
401 Dulany Street
Alexandria, VA 22314

The centralized facsimile number is **(571) 273-8300.**

Telephone inquiries concerning this decision should be directed to the undersigned at (571) 272-3215.

Charlema Grant

Charlema Grant
Petitions Attorney
Office of Petitions

UNITED STATES PATENT AND TRADEMARK OFFICE

Commissioner for Patents
United States Patent and Trademark Office
P.O. Box 1450
Alexandria, VA 22313-1450
www.uspto.gov

LERNER, DAVID, LITTENBERG,
KRUMHOLZ & MENTLIK
600 SOUTH AVENUE WEST
WESTFIELD NJ 07090

COPY MAILED
SEP 19 2008

In re Application of :
Fiona Millar :
Application No. 08/999,752 : ON PETITION
Filed: June 4, 1997 :
Attorney Docket No. TEVNHC 3.0-200 :

This is a decision on the petition under the unintentional provisions of 37 CFR 1.137(b), filed June 20, 2008, to revive the above-identified application.

The petition is **GRANTED**.

The application became abandoned for failure to timely file a reply within the meaning of 37 CFR 1.113 to the final Office action of August 22, 2002. The proposed reply required for consideration of a petition to revive must be a Notice of Appeal (and appeal fee required by 37 CFR 41.20(b)(2), an amendment that *prima facie* places the application in condition for allowance, a Request for Continued Examination and submission (37 CFR 1.114), or the filing of a continuing application under 37 CFR 1.53(b). See MPEP 711.03(c)(III)(A)(2). No extensions of time pursuant to the provisions of 37 CFR 1.136(a) were obtained. Accordingly, the date of abandonment of this application is November 23, 2002.

The petition satisfies the requirements of 37 CFR 1.137(b) in that petitioner has supplied (1) the reply in the form of a Request for Continued Examination (RCE) and fee of $810, and the submission required by 37 CFR 1.114; (2) the petition fee of $1500.00; and (3) a proper statement of unintentional delay.

A review of the record shows that a duplicate petition fee was charged. Accordingly $1540.00 will be refunded to the deposit account.

Telephone inquiries concerning this decision should be directed to the undersigned at (571) 272-3215.

This application is being referred to Technology Center AU 1615 for processing of the RCE and for appropriate action by the Examiner in the normal course of business on the amendment submitted in accordance with 37 CFR 1.114.

Charlema Grant
Petitions Attorney
Office of Petitions

UNITED STATES PATENT AND TRADEMARK OFFICE

BEFORE THE BOARD OF PATENT APPEALS
AND INTERFERENCES

Ex parte Moskowitz, Scott A. and Cooperman, Marc

Appeal No. 2007-2273
Application No. 08/999,766

MAILED
JUN 29 2007
U.S. PATENT AND TRADEMARK OFFICE
BOARD OF PATENT APPEALS
AND INTERFERENCES

DECISION ON PETITION

This is a decision on the Petition to the Director to Suspend the Separate Paper Requirement Under CFR § 41.47(b), filed June 6, 2007 ("Petition"). The Petition will be treated as a petition to the Chief Administrative Patent Judge under 37 C.F.R. § 41.3.

FINDINGS OF FACT

1. On July 10, 2003, Appellants filed an Appeal Brief that included a request for an oral hearing on the unnumbered first page of the Brief.

2. Appellants did not file a separate paper requesting an oral hearing as was required by 37 C.F.R. § 1.194(b) in effect at the time of the filing of the Appeal Brief.

3. On May 23, 2007, a Notification of Non-compliance Regarding Oral Hearing Request was mailed to Appellant's counsel advising Appellants of the defect in the request for an oral hearing. The Notification further advised Appellants that any petition they might file seeking a suspension of the separate paper requirement must include "a showing of facts to establish

that an extraordinary situation exists and that justice requires the separate paper requirement . . . be suspended or waived."

4. On June 6, 2007, Appellants filed the Petition alleging: (1) that the unnumbered first page of Appellants' Appeal Brief constitutes a separate paper (¶ 7), (2) that "the lengthy prosecution of this application merits an oral hearing" (¶ 8), and (3) that an oral hearing "represents a fundamental opportunity for inventors and examiners to work through issues of substance" (¶ 9).

5. As to the first of the above arguments, it is clear from an examination of Appellants' Appeal Brief that the request for an oral hearing was integrated into the Appeal Brief and was not filed as a separate paper.

6. As to the second and third of the above arguments, they are conclusory and do not explain why this appeal may qualify as an extraordinary situation. Examples of extraordinary situations are appeals involving complex technical and/or legal issues for which oral argument is necessary for an understanding and resolution of such issues.

DECISION

In view of the foregoing, the Petition is DENIED without prejudice to the filing of a renewed petition setting forth facts demonstrating that the present appeal presents an extraordinary situation in which the interest of justice requires that the separate paper requirement be suspended and an oral hearing be scheduled. Any such renewed petition must be filed within two weeks of the mailing date of this decision.

Michael R. Fleming
Chief Administrative Patent Judge
Board of Patent Appeals and Interferences

Appeal No. 2007-2273
Application 08/999,766

Scott A. Moskowitz
Wistaria Trading, Inc.
16711 Collins Avenue, #2505
Sunny Isles Beach, FL 33160

Tel.: 305-956-9041

UNITED STATES DEPARTMENT OF COMMERCE
Patent and Trademark Office

Patent Cooperation Treaty
Legal Office

Address: Assistant Commissioner for Patents
Box PCT
Washington, D.C. 20231

OCT 0 2 2000

Denise M. Kettleberger
MERCHANT, GOULD, SMITH, EDELL,
WELTER & SCHMIDT
3100 Norwest Center
90 South Seventh Street
Minneapolis, MN 55402

In re Application of TSILIBARY, Photini-Effie, et al. U.S. Application No.: 09/000,004 PCT No.: PCT/US96/12067 International Filing Date: 19 July 1996 Priority Date: 21 July 1995 Attorney's Docket No.: 600.314USWO For: ANALYSIS OF ALPHA INTEGRINS FOR THE DIAGNOSIS OF DIABETIC NEPHROPATHY	DECISION ON PETITION TO WITHDRAW HOLDING OF ABANDONMENT

This decision is issued in response to the "Petition To Withdraw Holding Of Abandonment (Missing Requirements Notice Not Received)" filed on 01 August 2000. No petition fee is required.

BACKGROUND

On 19 July 1996, applicants filed international application PCT/US96/12067 which claimed a priority date of 21 July 1995 and which designated the United States.

On 20 February 1997, a Demand was filed with the International Preliminary Examining Authority electing the United States. The election was made prior to the expiration of nineteen months from the priority date. As a result, the deadline for submission of a copy of the international application (unless previously communicated by the International Bureau) and payment of the basic national fee was extended to expire thirty months from the priority date, i.e., 21 January 1998.

On 21 January 1998, applicants filed a transmittal letter for entry into the national stage in the United States accompanied by a check in the amount of $1,372 ($1,070 as the basic national fee, $220 for inclusion of ten extra claims, and $82 for inclusion of one extra independent claim). The transmittal letter noted that a copy of the international application was not required because the international application was filed in the United States Receiving Office.

On 26 May 1998, the United States Designated/Elected Office (DO/EO/US) mailed a Notification Of Missing Requirements Under 35 U.S.C. 371 (Form PCT/DO/EO/905) indicating that an oath or declaration in compliance with 37 CFR 1.497 and a surcharge for providing the oath or declaration later than thirty months from the priority date were required. The Notification also informed applicants that the failure to submit these materials within one month of the date of the Notification would result in abandonment of the application.

On 22 May 2000, the DO/EO/US mailed a Notification Of Abandonment (Form PCT/DO/EO/909) indicating that the application was abandoned with respect to the United States for failure to respond to the Notification Of Missing Requirements.

On 01 August 2000, applicants filed the "Petition To Withdraw Holding Of Abandonment (Missing Requirements Notice Not Received)" considered herein. In this petition, applicants assert that the abandonment should be withdrawn because applicants never received the Notification Of Missing Requirements mailed on 26 May 1998.

DISCUSSION

In the present petition, applicants argue that the holding of abandonment should be withdrawn because applicant never received the Notification Of Missing Requirements mailed on 26 May 1998. Section 711.03(c)II of the MPEP sets forth the requirements for such a petition:

> The showing required to establish nonreceipt of an Office communication must include a statement from the practitioner stating that the Office communication was not received by the practitioner and attesting to the fact that a search of the file jacket and docket records indicates that the Office communication was not received. A copy of the docket record where the nonreceived Office communication would have been entered had it been received and docketed must be attached to and referenced in practitioner's statement.

Here, the petition contains the required statements from the practitioner that the Notification Of Missing Requirements was not received and that a search of the file jacket and docket records indicates that the Notification Of Missing Requirements was not received.

Regarding the docket records requirement, applicants have attached copies of the docket sheet for this particular file and a declaration from counsel's docketing supervisor regarding the firm's docketing procedures. However, these docket records are not sufficient. They apply only to this particular case, and therefore do not provide evidence as to whether the Notification Of Missing Requirements was received but simply docketed under an incorrect case. Applicant must provide a copy of the general docket record which sets out all the responses due for

counsel's law firm's entire office on 26 June 1998, the date on which a response to the Notification Of Missing Requirements was due. If such a general docket is not maintained by counsel's office, counsel must submit a statement expressly stating that this is the case.

Because the docket sheet submitted by applicant is not adequate, the petition is not grantable in its current form.

CONCLUSION

Applicant's Petition to Withdraw Holding of Abandonment is **DISMISSED** without prejudice.

If reconsideration on the merits of this petition is desired, a proper response must be filed within **TWO (2) MONTHS** from the mail date of this decision. Any reconsideration request should include a cover letter entitled "Renewed Petition to Withdraw Holding of Abandonment." Extensions of time may be obtained under 37 CFR 1.136(a)

Please direct further correspondence with respect to this matter to the Assistant Commissioner for Patents, Box PCT, Washington, DC 20231, and address the contents of the letter to attention of the PCT Legal Office.

Boris Milef
PCT Legal Examiner
PCT Legal Office

Richard M. Ross
PCT Petitions Attorney
PCT Legal Office
Telephone: (703) 308-6155
Facsimile: (703) 308-6459

RMR/BM:rmr

21 DEC 200

UNITED STATES PATENT AND TRADEMARK OFFICE

Commissioner for Patents
United States Patent and Trademark Office
Washington, D.C. 20231
www.uspto.gov

Denise M. Kettleberger
MERCHANT, GOULD, SMITH, EDELL, WELTER & SCHMIDT
3100 Norwest Center
90 South Seventh Street
Minneapolis, MN 55402

In re Application of TSILIBARY, Photini-Effie, et al. : U.S. Application No.: 09/000,004 : PCT No.: PCT/US96/12067 : International Filing Date: 19 July 1996 : Priority Date: 21 July 1995 : Attorney's Docket No.: 600.314USWO : For: ANALYSIS OF ALPHA INTEGRINS FOR THE : DIAGNOSIS OF DIABETIC NEPHROPATHY :	DECISION ON RENEWED PETITION TO WITHDRAW HOLDING OF ABANDONMENT

On 02 October 2000, this Office mailed a decision dismissing applicants' petition to withdraw the holding of abandonment. The petition was based on applicants' purported failure to receive the Notification Of Missing Requirements mailed on 26 May 1998. It was dismissed because applicants had failed to provide "a copy of the general docket record which sets out all the responses due for counsel's law firm's entire office on 26 June 1998, the date on which a response to the Notification Of Missing Requirements was due."

On 30 October 2000, applicants filed the "Renewed Petition To Withdraw Holding Of Abandonment" considered herein. Applicants have attached to the Renewed Petition the required general docket record setting forth all responses due from counsel's office on 26 June 1998. Applicants have therefore now satisfied all the requirements for a grantable petition.

The Renewed Petition To Withdraw Holding Of Abandonment is **GRANTED**. The Notification Of Abandonment mailed on 22 May 2000 is hereby **VACATED**.

This application is being forwarded to the National Stage Processing Branch of the PCT Processing Division for further processing in accord with this decision, including remailing the Notification Of Missing Requirements (Form PCT/DO/EO/905) originally mailed on 26 May 1998 and setting a new period for reply to begin as of the date of remailing the Form 905.

Boris Milef
PCT Legal Examiner
PCT Legal Office

RMR/BM:rmr

Richard M. Ross
PCT Petitions Attorney
PCT Legal Office
Telephone: (703) 308-6155
Facsimile: (703) 308-6459

FEB 2 0 2002

UNITED STATES PATENT AND TRADEMARK OFFICE

Commissioner for Patents
United States Patent and Trademark Office
Washington, D.C. 20231
www.uspto.gov

William M. Lee, Jr.
LEE MANN SMITH McWILLIAMS SWEENEY & OHLSON
P.O. Box 2786
Chicago, IL 60690-2786

In re Application of PLOUG, Ole et al U.S. Application No.: 09/000,008 PCT No.: PCT/DK96/00302 Int. Filing Date: 04 July 1996 Priority Date: 15 July 1995 Attorney's Docket No.: 196-1142 For: AXIAL PISTON MICROPUMP	DECISION

This decision is in response to applicants' "Petition Under 37 C.F.R. §1.137 with Accompanying Petition Under 37 C.F.R. §1.182" ("Pet.") and "Petition to the Commissioner Pursuant to 37 C.F.R. §1.182" filed on 12 October 1999 and applicants' "Status Inquiry and Request for Decision on Petition" filed 15 October 2001.

BACKGROUND

On 26 August 1999, a decision dismissing applicants' "Request for Withdrawal of Notification of Abandonment" filed 22 March 1999 and "Request for Reconsideration of Decision on Request and Notification" filed 24 December 1998 was mailed. Since the application was deemed still abandoned, applicants' request under 37 CFR 1.182 and 1.183 was not considered.

On 12 October 1999, applicants filed a petition under 37 CFR 1.137 and a petition under 37 CFR 1.182.

On 15 October 2001, applicants submitted a status inquiry along with copies of the documents filed 12 October 1999..

DISCUSSION

Petition Under 37 CFR 1.182

Applicants petition the Commissioner to accept the name change of Jakob Bogh Poulsen to Jakob Bogh Schubert. Applicants provided the $130.00 petition fee. Section 605.04(c) of the Manual of Patent Examining Procedure (MPEP) states, in part:

> In cases where an inventor's name has been changed after the application has been filed and the inventor desires to change his or her

> name on the application, he or she must submit a petition under 37 CFR 1.182. . . . The petition must include an appropriate petition fee and an affidavit signed with both names and setting forth the procedure whereby the change of name was effected, or a certified copy of the court order.

Applicants submitted a "Declaration of Jakob Bogh Schubert on 22 March 1999 who states in paragraph one that "[a]t the time of filing of the international application, his surname was Poulsen, and his full name was Jakob Bogh Poulsen." Then, he maintains in paragraph two that "his surname was changed to Schubert, and his full name is now Jakob Bogh Schubert. The change of his name was due to his marriage. There is no official document for this name change."

Therefore, applicants have satisfactorily met the requirements of the MPEP.

Petition Under 37 CFR 1.137(a)

A petition to revive an abandoned application on the grounds that the failure to reply was unavoidable pursuant to 37 CFR 1.137(a) must be accompanied by: (1) the required reply; (2) a showing to the satisfaction of the Commissioner that the entire delay in filing the required reply from the due date for the reply until the filing of a grantable petition pursuant to 37 CFR 1.137(a) was unavoidable; (3) any terminal disclaimer required pursuant to 37 CFR 1.137(c); and (4) the petition fee.

Applicants submitted the $110.00 petition fee. No terminal disclaimer is required. The showing requirement of item (2) may be met by a satisfactory showing that the cause of the delay resulting in failure to reply in timely fashion to the Office action was unavoidable. *See* §711.03(c) of the MPEP. Applicants argue that the abandonment was unavoidable because "nothing in MPEP 605.04(c) explains that if an inventor signs an application with his or her new name, that could lead to abandonment of the application. Indeed, nothing that has been found in the Manual of Patent Examining Procedure which explains that such a result would occur, particularly when the inventor properly signed the application with his new name, and indicated that it was a change of name. While applicants could expect that an appropriate petition to accept the name change would need to be filed, nothing in the Manual of Patent Examining Procedure or rules would suggest potential abandonment of the application in this situation." Pet. ¶ 7.

This argument has been considered and rejected.

A Notification of Missing Requirements was mailed by the United States Designated/Elected Office (DO/EO/US) in the above-captioned application on 16 March 1998. The Notification clearly indicated that a declaration meeting the requirements of 37 CFR 1.497 was required. Applicants were given one month to properly respond with

extensions of time available under 37 CFR 1.136(a). Applicants responded with a declaration that did not meet the requirements of 37 CFR 1.497(a)(3) because one of the co-inventors signed the declaration with a different name than was listed on the underlying international publication on 26 March 1998.

Accordingly, the DO/EO/US mailed a Notification of Defective Response and Notification of Defective Oath or Declaration on 26 May 1998 indicating that the declaration did not properly identify the inventors. In the Notification of a Defective Oath or Declaration in capital letters, it states that:

> FAILURE TO SUBMIT AN OATH OR DECLARATION IN COMPLIANCE WITH 37 CFR 1.497(a) AND (b) WITHIN THE TIME PERIOD SET WILL RESULT IN FAILURE TO ENTER THE NATIONAL STAGE AND THE ABANDONMENT OF THE APPLICATION.

The time period in the Notification of a Defective Response gave applicants one month or the time remaining in the Notification of Missing Requirements, whichever is longer, to respond. Applicants answered with a petition under 37 CFR 1.181 requesting withdrawal of the Notification of Defective Response on 15 June 1998 and 29 June 1998. However, the decision dated 09 December 1998 rejected applicants petition and declared that the above-captioned application was abandoned for failure to file a timely and complete response to the Notification mailed on 16 March 1998. A request for reconsideration was dismissed on 26 August 1999.

Applicants argue that there is nothing in the MPEP that would indicate a potential abandonment in this situation. This is incorrect. 37 CFR 1.135 (a) states that "[i]f an applicant of a patent application fails to reply within the time period provided under §1.134 and §1.136, the application will become abandoned unless an Office action indicates otherwise. A proper response to the Notification of a Defective Response was a petition under 37 CFR 1.182 to change the name of the inventor so that the declaration complies with 37 CFR 1.497. Applicants failed to provide this response in a timely manner. Section 711.03(c) states, in part that "[d]elay resulting from the lack of knowledge or improper application of the patent statute, rules of practice or the MPEP, however, does not constitute "unavoidable" delay."

Accordingly, applicants do not meet the requirements of 37 CFR 1.137(a).

Petition Under 37 CFR 1.137(b)

In the instant petition, applicants state that "the abandonment of the application clearly falls within the unavoidable basis for revival of the application, if the Patent and Trademark Office determines otherwise, it is requested that this petition be considered under 37 C.F.R. §13(b)[*sic*] as being unintentional.

A grantable petition pursuant to this paragraph must be accompanied by: (1) the reply required to the outstanding Office action or notice, unless previously filed; (2) the petition fee; (3) a statement that the entire delay in filing the required reply from the due date for the reply until the filing of a grantable petition pursuant to this paragraph was unintentional; and (4) any terminal disclaimer required.

The statement that "[t]he entire delay until the filing of a grantable petition was, and remains unintentional" has been interpreted as meaning that the "entire delay in filing the required reply from the due date for the reply until the filing of this petition under 37 CFR 1.137(b) was unintentional" as required by 37 CFR 1.137(b)(3). If this is an incorrect interpretation, applicants are requested to notify this office. The petition fee of $1,280.00 has been charged to counsel's Deposit Account No. 12-0913 as authorized. No terminal disclaimer is required.

Accordingly, all requirements under 37 CFR 1.137(b) have been satisfied.

CONCLUSION

Applicants' petition under 37 CFR 1.182 to accept the name change of a co-inventor is **GRANTED**.

For the reasons listed above, applicants' petition under 37 CFR 1.137(a) is **DISMISSED** without prejudice. But applicants' petition under 37 CFR 1.137(b) is **GRANTED**.

Upon granting applicants' request to accept the name change of Jakob Bogh Schubert, the declaration submitted on 26 March 1998 now complies with 37 CFR 1.497. Applicants have completed the requirements for acceptance under 35 U.S.C. § 371(c). The application has an international filing date of 04 July 1996, under 35 U.S.C. 363, and a 35 U.S.C. 371(c) date of 26 March 1998.

This application is being forwarded to the National Stage Processing Division of the Office of PCT Operations for continued processing.

Leonard Smith
PCT Legal Examiner
PCT Legal Office

James Thomson
Attorney Advisor
PCT Legal Office

Tel.: (703) 308-6457

UNITED STATES PATENT AND TRADEMARK OFFICE

COMMISSIONER FOR PATENTS
UNITED STATES PATENT AND TRADEMARK OFFICE
P.O. BOX 1450
ALEXANDRIA, VA 22313-1450
www.uspto.gov

Paper No. 17

LERNER AND GREENBERG P A
POST OFFICE BOX 2480
HOLLYWOOD, FL 33022-2480

COPY MAILED

AUG 1 8 2003

OFFICE OF PETITIONS

ON PETITION

In re Patent No. 6,086,333
Issue Date: July 11, 2000
Application No. 09/000,048
Filed: January 23, 1998
Attorney Docket Number: S71135PCUS
Title of Invention: PROCESS AND DEVICE FOR QUICKLY REDUCING PRESSURE IN AN INSTALLATION, IN PARTICULAR A HYDROGEN-COOLED GENERATOR

This is a decision on the petition under 37 CFR 1.182, filed on July 28, 2003, requesting the issuance of a duplicate Letters Patent for the above-identified application.

The petition is **granted**. The Office is in receipt of the $130.00 petition fee.

The Office of Patent Publication is directed to issue duplicate letters Patent.

A copy of this decision is being forwarded to the Office of Patent Publication for issuance of a duplicate letters patent. The patent file is being forwarded to Files Repository.

Telephone inquiries concerning this matter may be directed to the undersigned at (703)306-0251.

Charlema R. Grant
Petitions Attorney
Office of Petitions

cc: Krystal Paige/Susan Free, Crystal Park 3-910 (FAX 305-8755)

GR 95 P 3364

RECEIVED
AUG 2 1 2003
By

UNITED STATES PATENT AND TRADEMARK OFFICE

COMMISSIONER FOR PATENTS
UNITED STATES PATENT AND TRADEMARK OFFICE
WASHINGTON, D.C. 20231
www.uspto.gov

Paper No. 13

JOSEPH R. KEATING
KEATING & BENNETT, LLP
10400 EATON PLACE, SUITE 312
FAIRFAX, VA 22030

COPY MAILED

SEP 2 7 2001

OFFICE OF PETITIONS

In re Application of :
Shinji Watanabe et al. :
Application No. 09/000,301 : ON PETITION
Filed: January 20, 1998 :
Attorney Docket No. :

This is a decision on the petition under 37 CFR 1.137(b), filed August 29, 2001, to revive the above-identified application.

The petition is **GRANTED**.

The above-identified application became abandoned for failure to reply in a timely manner to the non-final Office action mailed January 19, 2000, which set a shortened statutory period for reply of three (3) months. No extensions of time under the provisions of 37 CFR 1.136(a) were obtained. Accordingly, the above-identified application became abandoned on April 20, 2000.

Telephone inquiries concerning this decision should be directed to Irvin Dingle at (703) 306-5684.

The application file is being forwarded to Technology Center 2700 for further processing.

Irvin Dingle
Petitions Examiner
Office of Petitions
Office of the Deputy Commissioner
for Patent Examination Policy

Under the Paperwork Reduction Act of 1995, no persons are required to respond to a collection of information unless it displays valid OMB control number.

PETITION TO ACCEPT UNINTENTIONALLY DELAYED PAYMENT OF MAINTENANCE FEE IN AN EXPIRED PATENT (37 CFR 1.378(c))

Patent Number	Issue Date (YYYY-MM-DD)	Application Number	Filing Date (YYYY-MM-DD)	Docket Number (if applicable)
5939515	1999-08-17	09000390	1998-01-29	1015452-000000

CAUTION: Maintenance fee (and surcharge, if any) payment must correctly identify: (1) the patent number and (2) the application number of the actual U.S. application leading to issuance of that patent to ensure the fee(s) is/are associated with the correct patent. 37 CFR 1.366(c) and (d).

SMALL ENTITY
☐ Patentee claims, or has previously claimed, small entity status. See 37 CFR 1.27.

LOSS OF ENTITLEMENT TO SMALL ENTITY STATUS
☐ Patentee is no longer entitled to small entity status. See 37 CFR 1.27(g)

NOT Small Entity		Small Entity	
Fee	Code	Fee	Code
○ 3 ½ year	(1551)	○ 3 ½ year	(2551)
◉ 7 ½ year	(1552)	○ 7 ½ year	(2552)
○ 11 ½ year	(1553)	○ 11 ½ year	(2553)

SURCHARGE
The surcharge required by 37 CFR 1.20(i)(2) (Fee Code 1558) must be paid as a condition of accepting unintentionally delayed payment of the maintenance fee.

MAINTENANCE FEE (37 CFR 1.20(e)-(g))
The appropriate maintenance fee must be submitted with this petition.

STATEMENT
THE UNDERSIGNED CERTIFIES THAT THE DELAY IN PAYMENT OF THE MAINTENANCE FEE TO THIS PATENT WAS UNINTENTIONAL

PETITIONER(S) REQUEST THAT THE DELAYED PAYMENT OF THE MAINTENANCE FEE BE ACCEPTED AND THE PATENT REINSTATED

THIS PORTION MUST BE COMPLETED BY THE SIGNATORY OR SIGNATORIES

37 CFR 1.378(d) states: "Any petition under this section must be signed by an attorney or agent registered to practice before the Patent and Trademark Office, or by the patentee, the assignee, or other party in interest."

I certify, in accordance with 37 CFR 1.4(d)(4) that I am

◉ An attorney or agent registered to practice before the Patent and Trademark Office

○ A sole patentee

○ A joint patentee; I certify that I am authorized to sign this submission on behalf of all the other patentees.

○ A joint patentee; all of whom are signing this e-petition

○ The assignee of record of the entire interest

Patent Practitioner			
A signature of the applicant or representative is required in accordance with 37 CFR 1.33 and 10.18. Please see 37 CFR 1.4(d) for the form of the signature			
Signature	/E. Joseph Gess/	Date (YYYY-MM-DD)	2007-10-03
Name	E. Joseph Gess	Registration Number	28510

This collection of information is required by 37 CFR 1.378(c). The information is required to obtain or retain a benefit by the public which is to file (and by the USPTO to process) an application. Confidentiality is governed by 35 U.S.C. 122 and 37 CFR 1.11 and 1.14. This collection is estimated to take 1 hour to complete, including gathering, preparing, and submitting the completed application form to the USPTO. Time will vary depending upon the individual case. Any comments on the amount of time you require to complete this form and/ or suggestions for reducing this burden, should be sent to the Chief Information Officer, U.S. Patent and Trademark Office, U.S. Department of Commerce, P.O. Box 1450, Alexandria, VA 22313-1450. DO NOT SEND FEES OR COMPLETED FORMS TO THIS ADDRESS. **This form can only be used when in conjunction with EFS-Web. If this form is mailed to the USPTO, it may cause delays in reinstating the patent.**

Privacy Act Statement

The Privacy Act of 1974 (P.L. 93-579) requires that you be given certain information in connection with your submission of the attached form related to a patent application or patent. Accordingly, pursuant to the requirements of the Act, please be advised that: (1) the general authority for the collection of this information is 35 U.S.C. 2(b)(2); (2) furnishing of the information solicited is voluntary; and (3) the principal purpose for which the information is used by the U.S. Patent and Trademark Office is to process and/or examine your submission related to a patent application or patent. If you do not furnish the requested information, the U.S. Patent and Trademark Office may not be able to process and/or examine your submission, which may result in termination of proceedings or abandonment of the application or expiration of the patent.

The information provided by you in this form will be subject to the following routine uses:

1. The information on this form will be treated confidentially to the extent allowed under the Freedom of Information Act (5 U.S.C. 552) and the Privacy Act (5 U.S.C. 552a). Records from this system of records may be disclosed to the Department of Justice to determine whether the Freedom of Information Act requires disclosure of these record s.

2. A record from this system of records may be disclosed, as a routine use, in the course of presenting evidence to a court, magistrate, or administrative tribunal, including disclosures to opposing counsel in the course of settlement negotiations.

3. A record in this system of records may be disclosed, as a routine use, to a Member of Congress submitting a request involving an individual, to whom the record pertains, when the individual has requested assistance from the Member with respect to the subject matter of the record.

4. A record in this system of records may be disclosed, as a routine use, to a contractor of the Agency having need for the information in order to perform a contract. Recipients of information shall be required to comply with the requirements of the Privacy Act of 1974, as amended, pursuant to 5 U.S.C. 552a(m).

5. A record related to an International Application filed under the Patent Cooperation Treaty in this system of records may be disclosed, as a routine use, to the International Bureau of the World Intellectual Property Organization, pursuant to the Patent Cooperation Treaty.

6. A record in this system of records may be disclosed, as a routine use, to another federal agency for purposes of National Security review (35 U.S.C. 181) and for review pursuant to the Atomic Energy Act (42 U.S.C. 218(c)).

7. A record from this system of records may be disclosed, as a routine use, to the Administrator, General Services, or his/her designee, during an inspection of records conducted by GSA as part of that agency's responsibility to recommend improvements in records management practices and programs, under authority of 44 U.S.C. 2904 and 2906. Such disclosure shall be made in accordance with the GSA regulations governing inspection of records for this purpose, and any other relevant (i.e., GSA or Commerce) directive. Such disclosure shall not be used to make determinations about individuals.

8. A record from this system of records may be disclosed, as a routine use, to the public after either publication of the application pursuant to 35 U.S.C. 122(b) or issuance of a patent pursuant to 35 U.S.C. 151. Further, a record may be disclosed, subject to the limitations of 37 CFR 1.14, as a routine use, to the public if the record was filed in an application which became abandoned or in which the proceedings were terminated and which application is referenced by either a published application, an application open to public inspections or an issued patent.

9. A record from this system of records may be disclosed, as a routine use, to a Federal, State, or local law enforcement agency, if the USPTO becomes aware of a violation or potential violation of law or regulation.

UNITED STATES PATENT AND TRADEMARK OFFICE

Commissioner for Patents
United States Patent and Trademark Office
P.O. Box 1450
Alexandria, VA 22313-1450
www.uspto.gov

In re Patent No. 5939515
Issue Date: August 17,1999
Application No. 09000390
Filed: January 29,1998
Attorney Docket No. 46086

:

:DECISION GRANTING PETITION
:UNDER 37 CFR 1.378(c)

:

This is a decision on the electronic petition, filed October 3,2007 ,under 37 CFR 1.378(c) to accept the unintentionally delayed payment of the 7.5 year maintenance fee for the above-identified patent.

The petition is GRANTED.

The maintenance fee is accepted, and the above-identified patent reinstated as of October 3,2007 . This decision also constitutes notice that the fee has been accepted. An electronic copy of the petition and this decision has been created as an entry in an Image File Wrapper. Nevertheless, petitioner should print and retain an independent copy

Telephone inquires related to this electronic decision should be directed to the Electronic Business Center at 1-866-217-9197.

SPE RESPONSE FOR CERTIFICATE OF CORRECTION

Paper No.: 25

DATE : April 4, 2007

TO SPE OF : ART UNIT ~~3625~~ 3661

SUBJECT : Request for Certificate of Correction on Patent No.: 6829592/

A response is requested with respect to the accompanying request for a certificate of correction.

Please complete this form and return with file, within **7** days to:
Palm location **7580, Certificates of Correction Branch – South Tower – 9A22**
If response is for an IFW, **return to employee (named below) via PUBSCofC Team in MADRAS.**
With respect to the change(s) requested, correcting Office and/or Applicant's errors, should the patent read as shown in the certificate of correction (COCIN)? No new matter should be introduced, nor should the scope or meaning of the claims be changed.

Thank You For Your Assistance

Magdalene Talley
Certificates of Correction Branch
Tel. No. 703-308-9390 ext. 116

The request for issuing the above-identified correction(s) is hereby:
Note your decision on the appropriate box.

- ☐ **Approved** — **All** changes apply.
- ☐ **Approved in Part** — Specify below which changes **do not** apply.
- ☑ **Denied** — State the reasons for denial below.

Comments:

All are Japanese refs. and there is no attached translation.

SPE

3661
Art Unit

306 (REV. 7/03)

U.S. DEPARTMENT OF COMMERCE Patent and Trademark Office

HDH (69)

SPE RESPONSE FOR CERTIFICATE OF CORRECTION

Paper No.: _____

DATE : November 19, 2007

TO SPE OF : ART UNIT ~~3625~~ 3661

SUBJECT : Request for Certificate of Correction on Patent No.: 6829592

A response is requested with respect to the accompanying request for a certificate of correction.

Reconsideration

Please complete this form and return with file, within **7** days to:

Palm location **7580, Certificates of Correction Branch – South Tower – 9A22**

If response is for an IFW, **return to employee (named below) via PUBSCofC Team in MADRAS.**

With respect to the change(s) requested, correcting Office and/or Applicant's errors, should the patent read as shown in the certificate of correction (COCIN)? No new matter should be introduced, nor should the scope or meaning of the claims be changed.

Magdalene Talley

Thank You For Your Assistance

Certificates of Correction Branch

Tel. No. 703-308-9390 ext. 116

The request for issuing the above-identified correction(s) is hereby:

Note your decision on the appropriate box.

- ☒ **Approved** — **All** changes apply.
- ☐ **Approved in Part** — Specify below which changes **do not** apply.
- ☐ **Denied** — State the reasons for denial below.

Comments:

The request for Cert. of Correction is Approved. An IDS (10/23/2007) should be entered.

CHN

UNITED STATES PATENT AND TRADEMARK OFFICE

Under Secretary of Commerce for Intellectual Property and
Director of the United States Patent and Trademark Office
Washington, D.C. 20231
www.uspto.gov

Paper No.

BEN J. YORKS
IRELL AND MANELLA
840 NEWPORT CENTER DRIVE, SUITE 400
NEWPORT BEACH CA 92660

OIPE JC140
MAR 11 2005
PATENT & TRADEMARK OFFICE

COPY MAILED

NOV 06 2002

OFFICE OF PETITIONS

ON PETITION

COMPUTER MOTION, INC.
1556695-0006 (P015C3)

In re Application of
Yulun Wang et al
Application No. 09/000,934
Filed: December 30, 1997
Attorney Docket No. 015278.P015C3

This is a decision on the petition, filed by facsimile transmission on November 5, 2002, under 37 CFR 1.313(c)(2) to withdraw the above-identified application from issue after payment of the issue fee.

The petition is **GRANTED.**

The above-identified application is withdrawn from issue for consideration of a submission under 37 CFR 1.114 (request for continued examination). See 37 CFR 1.313(c)(2).

Petitioner is advised that the issue fee paid on June 6, 2002 in the above-identified application cannot be refunded. If, however, the above-identified application is again allowed, petitioner may request that it be applied towards the issue fee required by the new Notice of Allowance.[1]

Telephone inquiries should be directed to the undersigned at (703) 305-8859.

After receipt of the file in the Office of Petitions, the application will be forwarded to Technology Center AU 3739 for processing of the request for continued examination under 37 CFR 1.114.

Karen Creasy

Karen Creasy
Petitions Examiner
Office of Petitions
Office of the Deputy Commissioner
for Patent Examination Policy

---

[1] The request to apply the issue fee to the new Notice must be made in writing and should be accompanied by the new Issue Fee Transmittal Form PTOL-85(b), along with a copy of this decision. Additionally, if the issue fee has increased from the previously paid issue fee, the balance due must be submitted. **Failure to *timely* request *in writing* that the previously paid issue fee be applied towards the new Notice and payment of any balance due will result in the abandonment of the application.**

RECEIVED
NOV 12 2002
IRELL & MANELLA LLP

DOCKETED

UNITED STATES DEPARTMENT OF COMMERCE
Patent and Trademark Office
ASSISTANT SECRETARY AND COMMISSIONER OF
PATENTS AND TRADEMARKS
Washington, D.C. 20231

Paper No. 17

Technology Department
MCI Communications Corporation
1133 19th Street, N.W.
Washington, D.C. 20036

COPY MAILED

JUL 12 2000

SPECIAL PROGRAMS OFFICE
DAC FOR PATENTS

In re Application of
Shoa-Kai Liu et al.
Application No. 09/001,884
Filed: December 31, 1997
Attorney Docket No. RIC-97-036

ON PETITION

This is a decision on the petition under 37 CFR 1.137(b), filed June 15, 2000, to revive the above-identified application.

The petition is **GRANTED**.

The above-identified application is being revived solely for purposes of continuity with a continued prosecution application (CPA) filed on June 15, 2000.

The application file is being forwarded to Technology Center 2700, for further processing.

Telephone inquiries concerning this decision should be directed to Latrice Bond at (703) 308-6911.

Latrice Bond

Latrice Bond
Paralegal Specialist
Office of Petitions
Office of the Deputy Assistant Commissioner
for Patent Policy and Projects

PTO/SB/66 (03-09)
Approved for use through 03/31/2012. OMB 0651-0016
U.S. Patent and Trademark Office: U.S. DEPARTMENT OF COMMERCE
Under the Paperwork Reduction Act of 1995, no persons are required to respond to a collection of information unless it displays valid OMB control number.

PETITION TO ACCEPT UNINTENTIONALLY DELAYED PAYMENT OF MAINTENANCE FEE IN AN EXPIRED PATENT (37 CFR 1.378(c))

Patent Number	Issue Date (YYYY-MM-DD)	Application Number	Filing Date (YYYY-MM-DD)	Docket Number (if applicable)
6206941	2001-03-27	09001959	1998-01-02	

CAUTION: Maintenance fee (and surcharge, if any) payment must correctly identify: (1) the patent number and (2) the application number of the actual U.S. application leading to issuance of that patent to ensure the fee(s) is/are associated with the correct patent. 37 CFR 1.366(c) and (d).

SMALL ENTITY
☒ Patentee claims, or has previously claimed, small entity status. See 37 CFR 1.27.

LOSS OF ENTITLEMENT TO SMALL ENTITY STATUS
☐ Patentee is no longer entitled to small entity status. See 37 CFR 1.27(g)

NOT Small Entity		Small Entity	
Fee	Code	Fee	Code
○ 3 ½ year	(1551)	○ 3 ½ year	(2551)
○ 7 ½ year	(1552)	◉ 7 ½ year	(2552)
○ 11 ½ year	(1553)	○ 11 ½ year	(2553)

SURCHARGE
The surcharge required by 37 CFR 1.20(i)(2) (Fee Code 1558) must be paid as a condition of accepting unintentionally delayed payment of the maintenance fee.

MAINTENANCE FEE (37 CFR 1.20(e)-(g))
The appropriate maintenance fee must be submitted with this petition.

STATEMENT
THE UNDERSIGNED CERTIFIES THAT THE DELAY IN PAYMENT OF THE MAINTENANCE FEE TO THIS PATENT WAS UNINTENTIONAL

PETITIONER(S) REQUEST THAT THE DELAYED PAYMENT OF THE MAINTENANCE FEE BE ACCEPTED AND THE PATENT REINSTATED

THIS PORTION MUST BE COMPLETED BY THE SIGNATORY OR SIGNATORIES

37 CFR 1.378(d) states: "Any petition under this section must be signed by an attorney or agent registered to practice before the Patent and Trademark Office, or by the patentee, the assignee, or other party in interest."

I certify, in accordance with 37 CFR 1.4(d)(4) that I am

○ An attorney or agent registered to practice before the Patent and Trademark Office

◉ A sole patentee

○ A joint patentee; I certify that I am authorized to sign this submission on behalf of all the other patentees.

○ A joint patentee; all of whom are signing this e-petition

○ The assignee of record of the entire interest

Sole Patentee			
A signature of the applicant or representative is required in accordance with 37 CFR 1.33 and 10.18. Please see 37 CFR 1.4(d) for the form of the signature.			
Signature	/CORNELIUS J. DU PLESSIS/	Date (YYYY-MM-DD)	2009-05-16
Name	CORNELIUS J. DU PLESSIS		

This collection of information is required by 37 CFR 1.378(c). The information is required to obtain or retain a benefit by the public which is to file (and by the USPTO to process) an application. Confidentiality is governed by 35 U.S.C. 122 and 37 CFR 1.11 and 1.14. This collection is estimated to take 1 hour to complete, including gathering, preparing, and submitting the completed application form to the USPTO. Time will vary depending upon the individual case. Any comments on the amount of time you require to complete this form and/ or suggestions for reducing this burden, should be sent to the Chief Information Officer, U.S. Patent and Trademark Office, U.S. Department of Commerce, P.O. Box 1450, Alexandria, VA 22313-1450. DO NOT SEND FEES OR COMPLETED FORMS TO THIS ADDRESS. **This form can only be used when in conjunction with EFS-Web. If this form is mailed to the USPTO, it may cause delays in reinstating the patent.**

Privacy Act Statement

The Privacy Act of 1974 (P.L. 93-579) requires that you be given certain information in connection with your submission of the attached form related to a patent application or patent. Accordingly, pursuant to the requirements of the Act, please be advised that: (1) the general authority for the collection of this information is 35 U.S.C. 2(b)(2); (2) furnishing of the information solicited is voluntary; and (3) the principal purpose for which the information is used by the U.S. Patent and Trademark Office is to process and/or examine your submission related to a patent application or patent. If you do not furnish the requested information, the U.S. Patent and Trademark Office may not be able to process and/or examine your submission, which may result in termination of proceedings or abandonment of the application or expiration of the patent.

The information provided by you in this form will be subject to the following routine uses:

1. The information on this form will be treated confidentially to the extent allowed under the Freedom of Information Act (5 U.S.C. 552) and the Privacy Act (5 U.S.C. 552a). Records from this system of records may be disclosed to the Department of Justice to determine whether the Freedom of Information Act requires disclosure of these records.

2. A record from this system of records may be disclosed, as a routine use, in the course of presenting evidence to a court, magistrate, or administrative tribunal, including disclosures to opposing counsel in the course of settlement negotiations.

3. A record in this system of records may be disclosed, as a routine use, to a Member of Congress submitting a request involving an individual, to whom the record pertains, when the individual has requested assistance from the Member with respect to the subject matter of the record.

4. A record in this system of records may be disclosed, as a routine use, to a contractor of the Agency having need for the information in order to perform a contract. Recipients of information shall be required to comply with the requirements of the Privacy Act of 1974, as amended, pursuant to 5 U.S.C. 552a(m).

5. A record related to an International Application filed under the Patent Cooperation Treaty in this system of records may be disclosed, as a routine use, to the International Bureau of the World Intellectual Property Organization, pursuant to the Patent Cooperation Treaty.

6. A record in this system of records may be disclosed, as a routine use, to another federal agency for purposes of National Security review (35 U.S.C. 181) and for review pursuant to the Atomic Energy Act (42 U.S.C. 218(c)).

7. A record from this system of records may be disclosed, as a routine use, to the Administrator, General Services, or his/her designee, during an inspection of records conducted by GSA as part of that agency's responsibility to recommend improvements in records management practices and programs, under authority of 44 U.S.C. 2904 and 2906. Such disclosure shall be made in accordance with the GSA regulations governing inspection of records for this purpose, and any other relevant (i.e., GSA or Commerce) directive. Such disclosure shall not be used to make determinations about individuals.

8. A record from this system of records may be disclosed, as a routine use, to the public after either publication of the application pursuant to 35 U.S.C. 122(b) or issuance of a patent pursuant to 35 U.S.C. 151. Further, a record may be disclosed, subject to the limitations of 37 CFR 1.14, as a routine use, to the public if the record was filed in an application which became abandoned or in which the proceedings were terminated and which application is referenced by either a published application, an application open to public inspections or an issued patent.

9. A record from this system of records may be disclosed, as a routine use, to a Federal, State, or local law enforcement agency, if the USPTO becomes aware of a violation or potential violation of law or regulation.

UNITED STATES PATENT AND TRADEMARK OFFICE

Commissioner for Patents
United States Patent and Trademark Office
P.O. Box 1450
Alexandria, VA 22313-1450
www.uspto.gov

In re Patent No. 6206941
Issue Date: March 27,2001
Application No. 09001959
Filed: January 2,1998
Attorney Docket No.

:
:DECISION GRANTING PETITION
:UNDER 37 CFR 1.378(c)
:

This is a decision on the electronic petition, filed May 16,2009 ,under 37 CFR 1.378(c) to accept the unintentionally delayed payment of the 7.5 year maintenance fee for the above-identified patent.

The petition is **GRANTED**.

The maintenance fee is accepted, and the above-identified patent reinstated as of May 16,2009 .
This decision also constitutes notice that the fee has been accepted. An electronic copy of the petition and this decision has been created as an entry in the Image File Wrapper. Nevertheless, petitioner should print and retain an independent copy.

Telephone inquiries related to this electronic decision should be directed to the Electronic Business Center at 1-866-217-9197.

2811

UNITED STATES PATENT AND TRADEMARK OFFICE

COMMISSIONER FOR PATENTS
UNITED STATES PATENT AND TRADEMARK OFFICE
WASHINGTON, D.C. 20231
www.uspto.gov

OIPE JC88
APR 2 8 2003
PATENT & TRADEMARK OFFICE

Paper No. 6

THOMAS E. MCDONNELL
DEPARTMENT OF THE NAVY
OFFICE OF THE GENERAL COUNSEL
COUNSEL FOR THE NAVAL RESEARCH LAB
WASHINGTON DC 20375

COPY MAILED
APR 2 8 2003
OFFICE OF PETITIONS

In re Application of
Adams, Jr. et al.
Application No. 09/002,031
Filed: December 12, 1997
Attorney Docket No. 78-824

ON PETITION

This is a decision on the petition under 37 CFR 1.137(b), filed November 25, 2002, to revive the above-identified application.

The petition is **GRANTED**.

This application became abandoned for failure to reply timely to the Notice to File Missing Parts of Application mailed April 8, 1998, which set a two-month shortened statutory period to respond. No extensions of time were obtained pursuant to 37 CFR 1.136(a). Accordingly, this application became abandoned on June 9, 1998. A Notice of Abandonment was mailed on March 18, 1999.

The petitioner has met the requirements to revive the above-identified application pursuant to 37 CFR 1.137(b).

The file is being forwarded to the Office of Initial Patent Examination for further processing of the application.

Telephone inquiries concerning this matter may be directed to the undersigned at (703) 306-5589.

Christina Tartera Donnell

Christina Tartera Donnell
Senior Petitions Attorney
Office of Petitions

RECEIVED
MAY 20 2003
TECHNOLOGY CENTER 2800

RECEIVED
MAY 1 2 2003
OFFICE OF PETITIONS

UNITED STATES PATENT AND TRADEMARK OFFICE

COMMISSIONER FOR PATENTS
UNITED STATES PATENT AND TRADEMARK OFFICE
P.O. BOX 1450
ALEXANDRIA, VA 22313-1450
www.uspto.gov

MCI, LLC
1133 19th STREET, N.W.
WASHINGTON, DC 20036

COPY MAILED
JUL 17 2006
OFFICE OF PETITIONS

In re Application of :
Haberman et al. :
Application No. 09/002,187 :
Filed: December 31, 1997 :
For: SYSTEM AND METHOD FOR :
ESTABLISHING A VIRTUAL CIRCUIT :
IN AN ATM NETWORK :

This is a decision on the Petition to Withdraw Wrongful Holding of Abandonment and in response to the several Status Inquiries filed in this application. The petition is properly treated under 37 CFR § 1.181. The delay in treating this petition is regretted.

The Petition is **dismissed**.

Any further petition to revive the above-identified application must be submitted within TWO (2) MONTHS from the mail date of this decision. Extensions of time under 37 CFR 1.136(a) are permitted. The reconsideration request should include a cover letter entitled "Renewed Petition under 37 CFR 1.137." This is **not** final agency action within the meaning of 5 U.S.C. § 704.

The above-identified application became abandoned for failure to timely and properly reply to the Notice of Allowance and Issue Fee Due, mailed December 18, 2000. The Notice set a non-extendable three (3) month period for reply. No response having been received, the application became abandoned on March 19, 2000. A Notice of Abandonment was mailed April 25, 2001.

The application file was subsequently lost, and was identified as lost on October 1, 2003.

On October 5, 2005, this Office received the instant petition. The petition provides that Applicant reviewed the file history for this application on October 4, 2005, and discovered an entry of "Mail Reconstruction Notice" entered December 9, 2004. Applicant filed the instant petition wherein Applicant avers non-receipt of the Notice. In addition to copies of applicant's file jacket and

docket records, Applicant provides a copy of the application file history and what is putatively a copy of the application papers.

Analysis and conclusion

Applicant is advised that the application became abandoned, as indicated in the copy of the file history provided by applicant, for failure to reply to the Notice of Allowance and Issue Fee Due, and Notice of Allowability, mailed December 18, 2000.

Applicant has failed to demonstrate non-receipt of the Notices, and failed to demonstrate that a timely reply to the Notices was filed.

Applicant should file a Request for Reconsideration of Petition and include the necessary statements and copies of documents.

Further correspondence with respect to this matter should be addressed as follows:

By mail: Commissioner for Patents
PO Box 1450
Alexandria, VA 22313-1450

By FAX: (571) 273-8300
Attn: Office of Petitions

By hand: Customer Service Window
Randolph Building
401 Dulany Street
Alexandria, VA 22314

Telephone inquiries concerning this matter should be directed to the undersigned at (571) 272-3232.

Derek L. Woods
Attorney
Office of Petitions

Cc: VERIZON
PATENT MANAGEMENT GROUP
1515 N. COURTHOUSE ROAD
SUITE 500
ARLINGTON VA 22201-2909

UNITED STATES PATENT AND TRADEMARK OFFICE

COMMISSIONER FOR PATENTS
UNITED STATES PATENT AND TRADEMARK OFFICE
P.O. BOX 1450
ALEXANDRIA, VA 22313-1450
www.uspto.gov

VERIZON
PATENT MANAGEMENT GROUP
1515 N. COURTHOUSE ROAD
SUITE 500
ARLINGTON, VA 22201-2909

COPY MAILED

SEP 2 0 2006

OFFICE OF PETITIONS

In re Application of :
Haberman et al. :
Application No. 09/002,187 :
Filed: December 31, 1997 :
For: SYSTEM AND METHOD FOR :
ESTABLISHING A VIRTUAL CIRCUIT :
IN AN ATM NETWORK :

This is a decision on the Renewed Petition Under 37 CFR 1.137, filed August 14, 2006, and supplemented August 17, 2006. The petition is properly treated as a renewed petition to withdraw the holding of abandonment under 37 CFR § 1.181.

The Petition is **granted**.

The above-identified application became abandoned for failure to timely and properly reply to the Notice of Allowance and Issue Fee Due, mailed December 18, 2000. The Notice set a non-extendable three (3) month period for reply. No response having been received, the application became abandoned on March 19, 2000. A Notice of Abandonment was mailed April 25, 2001.

The application file was subsequently lost, and was identified as lost on October 1, 2003.

On October 5, 2005, this Office received a petition wherein Petitioner provided that Applicant reviewed the file history for this application on October 4, 2005, and discovered an entry of "Mail Reconstruction Notice" entered December 9, 2004. Applicant filed the instant petition wherein Applicant averred non-receipt of the Notice. In addition to copies of applicant's file jacket and docket records, Applicant provided a copy of the application file history and what was putatively a copy of the application papers.

The petition was dismissed in a Decision mailed July 17, 2006. The dismissal informed Applicant that the application became abandoned, as indicated in the copy of the file history provided by applicant, for failure to reply to the Notice of Allowance and Issue Fee Due, and Notice of Allowability, mailed December 18, 2000.

Applicant had failed to demonstrate non-receipt of the Notices (of Alloance and Allowability), and failed to demonstrate that a timely reply to the Notices was filed.

Applicant was advised to file a Request for Reconsideration of Petition and include the necessary statements and copies of documents.

The instant Request for reconsideration

Applicant files the instant Request for Reconsideration and provides copies of a transmittal form, an issue fee transmittal form and five (5) sheets of drawings. The Transmittal Form and Issue Fee Transmittal Form each contain a Certificate of Mailing under 37 CFR 1.8, executed by Angela Trafton, certifying that the issue fee and drawings were mailed to this Office on March 19, 2001. Petitioner has also filed an Affidavit executed by Angela Trafton, attesting to the execution of the Certificate of Mailing on March 19, 2001 and to the deposit of the documents first class mail. Applicant also provides a copy of a return-receipt postcard acknowledging receipt of, *inter alia*, an issue fee transmittal form and five (5) sheets of formal drawings containing five (5) figures by this office on March 20, 2001.

In view of the above, the petition is granted. The application file is being referred to Publishing Division for processing into a patent.

Telephone inquiries concerning this matter should be directed to the undersigned at (571) 272-3232.

Derek L. Woods
Attorney
Office of Petitions

UNITED STATES PATENT AND TRADEMARK OFFICE

Commissioner for Patents
United States Patent and Trademark Office
P.O. Box 1450
Alexandria, VA 22313-1450
www.uspto.gov

In re Patent No. 5888884
Issue Date: March 30,1999
Application No. 09002314
Filed: January 2,1998
Attorney Docket No. RD-22.605

:

:DECISION GRANTING PETITION
:UNDER 37 CFR 1.378(c)

:

This is a decision on the electronic petition, filed December 12,2007 ,under 37 CFR 1.378(c) to accept the unintentionally delayed payment of the 7.5 year maintenance fee for the above-identified patent.

The petition is GRANTED.

The maintenance fee is accepted, and the above-identified patent reinstated as of December 12,2007. This decision also constitutes notice that the fee has been accepted. An electronic copy of the petition and this decision has been created as an entry in an Image File Wrapper. Nevertheless, petitioner should print and retain an independent copy

Telephone inquires related to this electronic decision should be directed to the Electronic Business Center at 1-866-217-9197.

Under the Paperwork Reduction Act of 1995, no persons are required to respond to a collection of information unless it displays valid OMB control number.

PETITION TO ACCEPT UNINTENTIONALLY DELAYED PAYMENT OF MAINTENANCE FEE IN AN EXPIRED PATENT (37 CFR 1.378(c))

Patent Number	Issue Date (YYYY-MM-DD)	Application Number	Filing Date (YYYY-MM-DD)	Docket Number (if applicable)
5888884	1999-03-30	09002314	1998-01-02	RD-22,605-2

CAUTION: Maintenance fee (and surcharge, if any) payment must correctly identify: (1) the patent number and (2) the application number of the actual U.S. application leading to issuance of that patent to ensure the fee(s) is/are associated with the correct patent. 37 CFR 1.366(c) and (d).

SMALL ENTITY
☐ Patentee claims, or has previously claimed, small entity status. See 37 CFR 1.27.

LOSS OF ENTITLEMENT TO SMALL ENTITY STATUS
☐ Patentee is no longer entitled to small entity status. See 37 CFR 1.27(g)

NOT Small Entity		Small Entity	
Fee	Code	Fee	Code
○ 3 ½ year	(1551)	○ 3 ½ year	(2551)
◉ 7 ½ year	(1552)	○ 7 ½ year	(2552)
○ 11 ½ year	(1553)	○ 11 ½ year	(2553)

SURCHARGE
The surcharge required by 37 CFR 1.20(i)(2) (Fee Code 1558) must be paid as a condition of accepting unintentionally delayed payment of the maintenance fee.

MAINTENANCE FEE (37 CFR 1.20(e)-(g))
The appropriate maintenance fee must be submitted with this petition.

STATEMENT
THE UNDERSIGNED CERTIFIES THAT THE DELAY IN PAYMENT OF THE MAINTENANCE FEE TO THIS PATENT WAS UNINTENTIONAL

PETITIONER(S) REQUEST THAT THE DELAYED PAYMENT OF THE MAINTENANCE FEE BE ACCEPTED AND THE PATENT REINSTATED

THIS PORTION MUST BE COMPLETED BY THE SIGNATORY OR SIGNATORIES

37 CFR 1.378(d) states: "Any petition under this section must be signed by an attorney or agent registered to practice before the Patent and Trademark Office, or by the patentee, the assignee, or other party in interest."

I certify, in accordance with 37 CFR 1.4(d)(4) that I am

◉ An attorney or agent registered to practice before the Patent and Trademark Office

○ A sole patentee

○ A joint patentee; I certify that I am authorized to sign this submission on behalf of all the other patentees.

○ A joint patentee; all of whom are signing this e-petition

○ The assignee of record of the entire interest

Patent Practitioner			
A signature of the applicant or representative is required in accordance with 37 CFR 1.33 and 10.18. Please see 37 CFR 1.4(d) for the form of the signature			
Signature	/Kenneth R. Glick/	Date (YYYY-MM-DD)	2007-12-12
Name	KENNETH R. GLICK	Registration Number	28612

This collection of information is required by 37 CFR 1.378(c). The information is required to obtain or retain a benefit by the public which is to file (and by the USPTO to process) an application. Confidentiality is governed by 35 U.S.C. 122 and 37 CFR 1.11 and 1.14. This collection is estimated to take 1 hour to complete, including gathering, preparing, and submitting the completed application form to the USPTO. Time will vary depending upon the individual case. Any comments on the amount of time you require to complete this form and/ or suggestions for reducing this burden, should be sent to the Chief Information Officer, U.S. Patent and Trademark Office, U.S. Department of Commerce, P.O. Box 1450, Alexandria, VA 22313-1450. DO NOT SEND FEES OR COMPLETED FORMS TO THIS ADDRESS. **This form can only be used when in conjunction with EFS-Web. If this form is mailed to the USPTO, it may cause delays in reinstating the patent.**

Privacy Act Statement

The Privacy Act of 1974 (P.L. 93-579) requires that you be given certain information in connection with your submission of the attached form related to a patent application or patent. Accordingly, pursuant to the requirements of the Act, please be advised that: (1) the general authority for the collection of this information is 35 U.S.C. 2(b)(2); (2) furnishing of the information solicited is voluntary; and (3) the principal purpose for which the information is used by the U.S. Patent and Trademark Office is to process and/or examine your submission related to a patent application or patent. If you do not furnish the requested information, the U.S. Patent and Trademark Office may not be able to process and/or examine your submission, which may result in termination of proceedings or abandonment of the application or expiration of the patent.

The information provided by you in this form will be subject to the following routine uses:

1. The information on this form will be treated confidentially to the extent allowed under the Freedom of Information Act (5 U.S.C. 552) and the Privacy Act (5 U.S.C. 552a). Records from this system of records may be disclosed to the Department of Justice to determine whether the Freedom of Information Act requires disclosure of these record s.

2. A record from this system of records may be disclosed, as a routine use, in the course of presenting evidence to a court, magistrate, or administrative tribunal, including disclosures to opposing counsel in the course of settlement negotiations.

3. A record in this system of records may be disclosed, as a routine use, to a Member of Congress submitting a request involving an individual, to whom the record pertains, when the individual has requested assistance from the Member with respect to the subject matter of the record.

4. A record in this system of records may be disclosed, as a routine use, to a contractor of the Agency having need for the information in order to perform a contract. Recipients of information shall be required to comply with the requirements of the Privacy Act of 1974, as amended, pursuant to 5 U.S.C. 552a(m).

5. A record related to an International Application filed under the Patent Cooperation Treaty in this system of records may be disclosed, as a routine use, to the International Bureau of the World Intellectual Property Organization, pursuant to the Patent Cooperation Treaty.

6. A record in this system of records may be disclosed, as a routine use, to another federal agency for purposes of National Security review (35 U.S.C. 181) and for review pursuant to the Atomic Energy Act (42 U.S.C. 218(c)).

7. A record from this system of records may be disclosed, as a routine use, to the Administrator, General Services, or his/her designee, during an inspection of records conducted by GSA as part of that agency's responsibility to recommend improvements in records management practices and programs, under authority of 44 U.S.C. 2904 and 2906. Such disclosure shall be made in accordance with the GSA regulations governing inspection of records for this purpose, and any other relevant (i.e., GSA or Commerce) directive. Such disclosure shall not be used to make determinations about individuals.

8. A record from this system of records may be disclosed, as a routine use, to the public after either publication of the application pursuant to 35 U.S.C. 122(b) or issuance of a patent pursuant to 35 U.S.C. 151. Further, a record may be disclosed, subject to the limitations of 37 CFR 1.14, as a routine use, to the public if the record was filed in an application which became abandoned or in which the proceedings were terminated and which application is referenced by either a published application, an application open to public inspections or an issued patent.

9. A record from this system of records may be disclosed, as a routine use, to a Federal, State, or local law enforcement agency, if the USPTO becomes aware of a violation or potential violation of law or regulation.

UNITED STATES DEPARTMENT OF COMMERCE
Patent and Trademark Office
ASSISTANT SECRETARY AND COMMISSIONER OF
PATENTS AND TRADEMARKS
Washington, D.C. 20231

JJGJr.12-99

Paper No. 10

COPY MAILED

JAN 1 1 2000

SPECIAL PROGRAMS OFFICE
DAC FOR PATENTS

DANIEL J. MEANEY, JR.
P.O. BOX 22307
SANTA BARBARA, CA 93121

In re Application of
F. Shepard
Application No. 09/002,958
Filed: 6 January, 1998
Attorney Docket No. 5483.1-41341

ON PETITION

This is a decision on the petition filed herein 30 November, 1999, and supplemented 4 January and 30 November, 1999, under 37 C.F.R. §1.137(b),[1] to revive the above-identified application.

The petition is **GRANTED**.

The record indicates that: the Notice of Allowance and Issue Fee Due and Notice of Allowability (with the requirement for filing of formal drawings) were mailed 24 May, 1999, and due on or before 24 August, 1999. Because the Issue Fee was not paid before the non-extendable deadline and drawings were not timely filed on or before the due date the matter went abandoned at midnight 24 August, 1999. Notice of Abandonment was mailed 4 November, 1999.

This application is being forwarded to Publications Branch to be processed into a patent.

---

[1] Effective December 1, 1997, the provisions of 37 C.F.R. 1.137(b) now provide that where the delay in reply was unintentional, a petition may be filed to revive an abandoned application or a lapsed patent pursuant to 37 C.F.R. 1.137(b). A grantable petition filed under the provisions of 37 C.F.R. §1.137(b) must be accompanied by:
(1) the required reply, unless previously filed. In a nonprovisional application abandoned for failure to prosecute, the required reply may be met by the filing of a continuing application. In an application or patent, abandoned or lapsed for failure to pay the issue fee or any portion thereof, the required reply must be the payment of the issue fee or any outstanding balance thereof.
(2) the petition fee as set forth in 37 C.F.R. 1.17(m);
(3) a statement that the entire delay in filing the required reply from the due date for the reply until the filing of a grantable petition pursuant to 37 C.F.R. 1.137(b) was unintentional. The Commissioner may require additional information where there is a question whether the delay was unintentional; and
(4) any terminal disclaimer (and fee set forth in 37 C.F.R. 1.20(d)) required pursuant to 37 C.F.R. 1.137(c).

Telephone inquiries concerning this matter may be directed to Petitions Attorney John J. Gillon, Jr., at (703) 305-9199.

Beverly M. Flanagan for

John J. Gillon, Jr.
Petitions Attorney

Beverly M. Flanagan

Beverly M. Flanagan
Supervisory Petitions Examiner
Office of Petitions
Office of the Deputy Assistant Commissioner
for Patent Policy and Projects

NOTICE RE: CERTIFICATES OF CORRECTION

1653

DATE : **February 6, 2002**

Paper No.: 18

TO : Supervisor, Art Unit 1653

SUBJECT : Certificate of Correction Request in Patent No.: 6,265,198

A response to the following question(s) is requested with respect to the accompanying request for a certificate of correction.

[X] 1. Would the change(s) requested, under 37 C.F.R. 1.323, correcting Applicant/Attorney's (A or Atty.) errors, constitute new matter or require reexamination of the application?

[X] 2. Would the change(s) requested, under 37 C.F.R. 1.323, correcting Applicant/Attorney's (A or Atty.) errors, materially affect the scope or meaning of the claims allowed by the examiner in the patent?

[X] 3. Applicant disagrees with change(s) initialed and dated by Examiner in lieu of an Examiner's Amendment. Should the requested changes be granted?

[X] 4. With respect to the change(s) requested, correcting Office and/or printing (O, Off, C, and/or P) errors, should the patent read as shown in the certificate of correction?

[X] 5. If the amendment filed , had been considered by the Examiner, would the amendment have been entered?

PLEASE COMPLETE THIS FORM AND
RETURN WITH FILE, WITHIN 7 DAYS,
TO CERTIFICATES OF CORRECTION BRANCH - PK 3-915/922
PALM LOCATION 7580 - TEL. N0. 305-8309

Note your decision(s), regarding the changes requested in the Request for Certificate of Correction, by placing an X in the box that reflects your decision to the corresponding question.
Note any comments below.

[ ] 1. YES	[X] NO	[ ] Comments below
[ ] 2. YES	[X] NO	[ ] Comments below
[X] 3. YES	[ ] NO	[ ] Comments below
[X] 4. YES	[ ] NO	[ ] Comments below
[X] 5. YES	[ ] NO	[ ] Comments below

[X] Comments: The filing date of parent S/N 08/463994 is June 5 1995 NOT June 6, 1995 as set forth in PALM and on the Bib. sheet. Applicant's correctly cited the date in their Declaration and on Pg 1 of the Specification. Therefore, this C of C is to correct an office error. KCE 2/12/02

CHRISTOPHER S. F. LOW
SUPERVISORY PATENT EXAMINER
TECHNOLOGY CENTER 1600

Christopher Low

1653
Art Unit

UNITED STATES PATENT AND TRADEMARK OFFICE

CERTIFICATE OF CORRECTION

PATENT NO. : 6,265,198 B1
DATED : July 24, 2001
INVENTOR(S) : Tripp et al.

It is certified that error appears in the above-identified patent and that said Letters Patent is hereby corrected as shown below:

Title page,
Item [63], **Related U.S. Application Data,**
Line 2, after "Jun." delete "6" and insert -- 5 -- therefor.

Signed and Sealed this

Twelfth Day of March, 2002

Attest:

Attesting Officer

JAMES E. ROGAN
Director of the United States Patent and Trademark Office

PTO/SB/ 44 (08-00)
Approved for use through 09/30/2000. OMB 0651-0033
U.S. Patent and Trademark Office; U.S. DEPARTMENT OF COMMERCE
Under the Paperwork Reduction Act of 1995, no persons are required to respond to a collection of information unless it displays a valid OMB control number.
(Also Form PTO-1050)

UNITED STATES PATENT AND TRADEMARK OFFICE
CERTIFICATE OF CORRECTION

PATENT NO : 6,265,198
DATED : July 24, 2001
INVENTOR(S) : Tripp et al.

It is certified that error appears in the above-identified patent and that said Letters Patent is hereby corrected as shown below:

Title page, item (63) "Related U.S. Application Data", line 2, after "Jun." delete "6" and insert – 5 – therefor.

MAILING ADDRESS OF SENDER:
Angela K. Dallas
SHERIDAN ROSS P.C.
1560 Broadway, Suite 1200
Denver, Colorado 80202-5141

PATENT NO. 6,265,198

No. of additional copies

Burden Hour Statement: This form is estimated to take 1.0 hour to complete. Time will vary depending upon the needs of the individual case. Any comments on the amount of time you are required to complete this form should be sent to the Chief Information Officer, U.S. Patent and Trademark Office, Washington, DC 20231. DO NOT SEND FEES OR COMPLETED FORMS TO THIS ADDRESS. SEND TO: Assistant Commissioner for Patents, Washington, DC 20231.

PTO/SB/ 44 (08-00)
Approved for use through 09/30/2000. OMB 0651-0033
U.S. Patent and Trademark Office; U.S. DEPARTMENT OF COMMERCE
Under the Paperwork Reduction Act of 1995, no persons are required to respond to a collection of information unless it displays a valid OMB control number.
(Also Form PTO-1050)

UNITED STATES PATENT AND TRADEMARK OFFICE
CERTIFICATE OF CORRECTION

PATENT NO : 6,265,198
DATED : July 24, 2001
INVENTOR(S) : Tripp et al.

It is certified that error appears in the above-identified patent and that said Letters Patent is hereby corrected as shown below:

Title page, item (63) "Related U.S. Application Data", line 2, after "Jun." delete "6" and insert – 5 – therefor.

MAILING ADDRESS OF SENDER:
Angela K. Dallas
SHERIDAN ROSS P.C.
1560 Broadway, Suite 1200
Denver, Colorado 80202-5141

PATENT NO. 6,265,198

No. of additional copies

Burden Hour Statement: This form is estimated to take 1.0 hour to complete. Time will vary depending upon the needs of the individual case. Any comments on the amount of time you are required to complete this form should be sent to the Chief Information Officer, U.S. Patent and Trademark Office, Washington, DC 20231. DO NOT SEND FEES OR COMPLETED FORMS TO THIS ADDRESS. SEND TO: Assistant Commissioner for Patents, Washington, DC 20231.

UNITED STATES PATENT AND TRADEMARK OFFICE

COMMISSIONER FOR PATENTS
UNITED STATES PATENT AND TRADEMARK OFFICE
P.O. BOX 1450
ALEXANDRIA, VA 22313-1450
www.uspto.gov

Paper No.

MORGAN LEWIS & BOCKIUS LLP
1111 PENNSYLVANIA AVENUE NW
WASHINGTON DC 20004

COPY MAILED
MAY 0 2 2006
OFFICE OF PETITIONS

In Application of	:	
Ramakrishnan et al.	:	DECISION ON APPLICATION
Application No. 09/003,810	:	FOR
Filed: January 7, 1998	:	PATENT TERM ADJUSTMENT
Atty Docket No. 44481-5017-0	:	

This is in response to the STATEMENT OF FACTS UNDER 37 C.F.R. 1.705(b)(2), filed December 9, 2005. Applicants request reconsideration of patent term adjustment of seven hundred sixty-one (761) days indicated on the Determination of Patent Term Adjustment under 35 U.S.C. 154(b) attached to the Notice of Allowance and a reinstatement of the missing patent term of 360 (three hundred and sixty) days for a total PTA of 1121 (one thousand one hundred and twenty-one) days.

The application for patent term adjustment is **GRANTED**.

The Office has updated the PAIR screen to reflect that the correct Patent Term Adjustment (PTA) determination at the time of the mailing of the Notice of Allowance is one thousand one hundred twenty-one (1121) days. A copy of the updated PAIR screen, showing the correct determination, is enclosed.

On September 21, 2005, the Office mailed the Determination of Patent Term Adjustment under 35 U.S.C. 154(b) in the above-identified application. The Notice stated that the patent term adjustment (PTA) to date is 761 days. The instant request was

timely filed on the same date as payment of the Issue Fee. Applicants request a total of 360 additional days of PTA for 1) a 348 day Office delay in mailing a notice of allowance more than four months after a favourable interference decision, and 2) a 12 day Office delay in mailing a first Office action after the filing date of the continued prosecution application.

Applicants state that the patent issuing from this application is not subject to a terminal disclaimer.

Applicants are entitled to a period of adjustment for Office delay in taking action after the final decision by the Board. Specifically § 1.703(a)(5) provides for a period of adjustment for Office delay for:

> The number of days, if any, in the period beginning on the day after the date that is four months after the date of a final decision by the Board of Patent Appeals and Interferences or by a Federal court in an appeal under 35 U.S.C. 141 or a civil action under 35 U.S.C. 145 or 146 where at least one allowable claim remains in the application and ending on the date of mailing of either an action under 35 U.S.C. 132 or a notice of allowance under 35 U.S.C. 151, whichever occurs first;

A favorable decision in the interference proceeding was entered on June 8, 2004. The notice of allowance under 35 U.S.C. 151, mailed September 21, 2005, was mailed in response to the favorable decision. Pursuant to § 1.703(a)(5), a period of adjustment of 348 days, for the period from October 9, 2004 to September 21, 2005, should have been entered.

Applicants are correct that a period of 12 days should have been entered pursuant to 37 CFR 1.703(a)(1). The date of mailing of a first action under 35 U.S.C. 132 is May 9, 2002. That is outside the 14 months of the filing date of the application, February 27, 2001, by 12 days. Thus, a period of adjustment of 12 days is being entered pursuant to 1.702(a)(1).

Applicants state they engaged in reasonable efforts to conclude prosecution of the application. However, a review of the record indicates possible basis for entry of a period of reduction. Specifically, § 1.704(c) provides that:

> Circumstances that constitute a failure of the applicant to engage in reasonable efforts to conclude processing or examination of an application also include the following circumstances, which will result in the following reduction of the period of adjustment set forth in § 1.703 to the extent that the periods are not overlapping:
>
> > (1) Suspension of action under § 1.103 at the applicant 's request, in which case the period of adjustment set forth in § 1.703 shall be reduced by the number of days, if any, beginning on the date a request for suspension of action under § 1.103 was filed and ending on the date of the termination of the suspension;

The prosecution history is unclear as to the extent to which, if at all, the prosecution of this application was delayed due to suspension of action under § 1.103 at applicant's request. However, on March 12, 2002, the Office mailed a communication stating that the request for deferral/suspension of action under 37 CFR 1.103 has been approved. Further, in the communication it was noted that the application was previously suspended on May 21, 2001. Yet, no letter requesting suspension of action at the applicant's request is present in the application file. Accordingly, no reduction is presently being entered on this basis. However, applicants are reminded of their duty of good faith and candor to the Office. See Comment 43 of *Changes to Implement Patent Term Adjustment under Twenty-Year Patent Term; Final Rule*, 65 Fed. Reg. 54366 (September 18, 2000). Pursuant to Comment 43, if the patent issues with more patent term adjustment than it is due because of the failure of the Office to enter a reduction for suspension at applicant's request or on any other basis, patentees should so advise the Office.

In view thereof, the correct determination of patent term adjustment at the time of the mailing of the notice of allowance is 1121 days.

Applicants are reminded that the patent will issue with a revised patent term adjustment. This revised PTA will include, as appropriate, periods of adjustment for the delay in issuing the patent after payment of the issue fee and satisfaction of all outstanding requirements; and for the Office's failure to issue the patent within 3 years of its filing date.

The Office acknowledges submission of the $200.00 fee set forth in 37 CFR 1.18(e). No additional fees are required.

The Office of Patent Publication has been advised of this decision. The application is, thereby, being forwarded to the Office of Patent Publication for issuance of the patent.

Telephone inquiries specific to this matter should be directed to the undersigned at (571) 272-3219.

Nancy Johnson
Senior Petitions Attorney
Office of Petitions

Enclosure: Copy of REVISED Pair Screen

PALM INTRANET

Day : Tuesday
Date: 5/2/2006
Time: 06:11:13

PTA Calculations for Application: 09/003810			
Application Filing Date:	01/07/1998	PTO Delay (PTO):	761
Issue Date of Patent:		Three Years:	0
Pre-Issue Petitions:	0	Applicant Delay (APPL):	0
Post-Issue Petitions:	0	Total PTA (days):	1121
PTO Delay Adjustment:	360		

File Contents History

Number	Date	Contents Description	PTO	APPL	START
64	05/02/2006	ADJUSTMENT OF PTA CALCULATION BY PTO	348		
63	05/02/2006	ADJUSTMENT OF PTA CALCULATION BY PTO	12		
52	09/21/2005	MAIL NOTICE OF ALLOWANCE			
51	09/19/2005	NOTICE OF ALLOWANCE DATA VERIFICATION COMPLETED			
50	09/14/2005	NOTICE OF ALLOWABILITY			
49	06/08/2004	MAIL INTERFERENCE DECISION - FAVORABLE			
48	06/08/2004	INTERFERENCE DECISION ON PRIORITY - FAVORABLE	761		47
47	05/09/2002	DECLARATION OF INTERFERENCE			
46	04/25/2002	INTERFERENCE COMMUNICATION: INITIAL MEMO DISPOSAL			
44	03/12/2002	MAIL LETTER SUSPENDING PROSECUTION AT APPLICANT'S REQUEST			
43	03/11/2002	LETTER OF SUSPENSION - APPLICANT INITIATED			
42	01/22/2002	IFW SCAN & PACR AUTO SECURITY REVIEW			
41	02/27/2001	WORKFLOW - REQUEST FOR CPA - BEGIN			
40	03/09/2001	DATE FORWARDED TO EXAMINER			
39	02/27/2001	CONTINUING PROSECUTION APPLICATION - CONTINUATION (ACPA)			
38	02/27/2001	MAIL EXPRESS ABANDONMENT (DURING EXAMINATION)			
37	02/27/2001	EXPRESS ABANDONMENT (DURING EXAMINATION)			

Search Another: Application# Search

EXPLANATION OF PTA CALCULATION

UNITED STATES PATENT AND TRADEMARK OFFICE

COMMISSIONER FOR PATENTS
UNITED STATES PATENT AND TRADEMARK OFFICE
P.O. BOX 1450
ALEXANDRIA, VA 22313-1450
www.uspto.gov

ARNOLD & PORTER LLP (18528)
555 TWELFTH ST, NW
WASHINGTON, DC 20004

COPY MAILED

OCT 2 8 2004

OFFICE OF PETITIONS

ON PETITION

In re Application of :
Nigel R. A. Beeley, et al. :
Application No. 09/003,869 :
Filed: January 7, 1998 :
Atty Docket No. 030639.0043.CPA1 :

This is a decision on the petition, filed October 21, 2004, under 37 CFR 1.313(c)(2) to withdraw the above-identified application from issue after payment of the issue fee.

The petition is **GRANTED**.

The above-identified application is withdrawn from issue for consideration of a submission under 37 CFR 1.114 (request for continued examination). See 37 CFR 1.313(c)(2).

Petitioner is advised that the issue fee paid on July 15, 2004 in the above-identified application cannot be refunded. If, however, the above-identified application is again allowed, petitioner may request that it be applied towards the issue fee required by the new Notice of Allowance. [1]

Telephone inquiries relating to this decision should be directed to the undersigned at (571) 272-3204.

The application is being referred to Technology Center AU 1653 for further processing of the request for continued examination under 37 CFR 1.114 filed October 21, 2004.

Sherry D. Brinkley
Petitions Examiner
Office of Petitions
Office of the Deputy Commissioner
for Patent Examination Policy

[1]The request to apply the issue fee to the new Notice may be satisfied by completing and returning the new Issue Fee Transmittal Form PTOL-85(b), which includes the following language thereon: "Commissioner for Patents is requested to apply the Issue Fee and Publication Fee (if any) or re-apply any previously paid issue fee to the application identified above." Petitioner is advised that, whether a fee is indicated as being due or not, the Issue Fee Transmittal Form **must** be completed and timely submitted to avoid abandonment. Note the language in bold text on the first page of the Notice of Allowance and Fee(s) Due (PTOL-85).

UNITED STATES PATENT AND TRADEMARK OFFICE

COMMISSIONER FOR PATENTS
UNITED STATES PATENT AND TRADEMARK OFFICE
P.O. BOX 1450
ALEXANDRIA, VA 22313-1450
www.uspto.gov

Paper No. 18

MAIL

MAY 1 9 2004

DIRECTOR OFFICE
TECHNOLOGY CENTER 2600

GRANT R CLAYTON
CLAYTON HOWARTH & CANNON, PC
P O BOX 1909
SANDY UT 84091-1909

In re Application of:
Ivie, et al
Application No.: 09/004,040
Filed: January 7, 1998
For: **INFORMATION COMMUNICATION SYSTEMS**

DECISION ON PETITION TO WITHDRAW THE HOLDING OF ABANDONMENT

This is a decision on the request filed March 22, 2004 which is considered as a Petition to Withdraw the Holding of Abandonment pursuant to 37 C.F.R. § 1.181(a). No fee is required.

This application was held abandoned for failure to respond in a timely and effective manner to the non-final Office action mailed August 18, 2003. A Notice of Abandonment was mailed March 15, 2004.

Petitioner alleges to have timely filed a proper response to said non-final Office action, but inadvertently included in the header information the wrong serial number. In support, petitioner has provided evidence in the way of a copy of the response which included a certificate of facsimile transmission which was signed by the petitioner. A review of the application file record having the inadvertent serial number, yielded the original submission.

The original submission correctly identified in the header section, the appropriate inventorship, title, filing date, and attorney docket number, for the subject application. Therefore, it is evident that the original response was received by the Office. Applicant is reminded to insure the accuracy of the transmittal information in the future to avoid potential abandonment.

In view of the above reasons, the Notice of Abandonment is hereby vacated and the holding of abandonment withdrawn

Accordingly, the petition is **GRANTED**.

The application file is being forwarded to the TC2600 technical Support staff for entry of the original submission, i.e., the amendment filed via facsimile transmission on October 14, 2003, and from there will be forwarded to the Examiner for appropriate action in due course.

Dwayne D. Bost
Special Program Examiner
Technology Center 2600
Communications

UNITED STATES PATENT AND TRADEMARK OFFICE

Commissioner for Patents
United States Patent and Trademark Office
P.O. Box 1450
Alexandria, VA 22313-1450
www.uspto.gov

In re Patent No. 6262593
Issue Date: July 17,2001
Application No. 09004335
Filed: January 8,1998
Attorney Docket No. 11050.0013

:

:DECISION GRANTING PETITION
:UNDER 37 CFR 1.378(c)

:

This is a decision on the electronic petition, filed December 17,2009 ,under 37 CFR 1.378(c) to accept the unintentionally delayed payment of the 7.5 year maintenance fee for the above-identified patent.

The petition is **GRANTED**.

The maintenance fee is accepted, and the above-identified patent reinstated as of December 17,2009 . This decision also constitutes notice that the fee has been accepted. An electronic copy of the petition and this decision has been created as an entry in the Image File Wrapper. Nevertheless, petitioner should print and retain an independent copy.

Telephone inquiries related to this electronic decision should be directed to the Electronic Business Center at 1-866-217-9197.

PTO/SB/66 (03-09)
Approved for use through 03/31/2012. OMB 0651-0016
U.S. Patent and Trademark Office: U.S. DEPARTMENT OF COMMERCE
Under the Paperwork Reduction Act of 1995, no persons are required to respond to a collection of information unless it displays valid OMB control number.

PETITION TO ACCEPT UNINTENTIONALLY DELAYED PAYMENT OF MAINTENANCE FEE IN AN EXPIRED PATENT (37 CFR 1.378(c))

Patent Number	Issue Date (YYYY-MM-DD)	Application Number	Filing Date (YYYY-MM-DD)	Docket Number (if applicable)
6,262,593	2001-07-17	09/004,335	1998-01-08	PHLV1418-005

CAUTION: Maintenance fee (and surcharge, if any) payment must correctly identify: (1) the patent number and (2) the application number of the actual U.S. application leading to issuance of that patent to ensure the fee(s) is/are associated with the correct patent. 37 CFR 1.366(c) and (d).

SMALL ENTITY
☐ Patentee claims, or has previously claimed, small entity status. See 37 CFR 1.27.

LOSS OF ENTITLEMENT TO SMALL ENTITY STATUS
☐ Patentee is no longer entitled to small entity status. See 37 CFR 1.27(g)

NOT Small Entity		Small Entity	
Fee	Code	Fee	Code
○ 3 ½ year	(1551)	○ 3 ½ year	(2551)
◉ 7 ½ year	(1552)	○ 7 ½ year	(2552)
○ 11 ½ year	(1553)	○ 11 ½ year	(2553)

SURCHARGE
The surcharge required by 37 CFR 1.20(i)(2) (Fee Code 1558) must be paid as a condition of accepting unintentionally delayed payment of the maintenance fee.

MAINTENANCE FEE (37 CFR 1.20(e)-(g))
The appropriate maintenance fee must be submitted with this petition.

STATEMENT
THE UNDERSIGNED CERTIFIES THAT THE DELAY IN PAYMENT OF THE MAINTENANCE FEE TO THIS PATENT WAS UNINTENTIONAL

PETITIONER(S) REQUEST THAT THE DELAYED PAYMENT OF THE MAINTENANCE FEE BE ACCEPTED AND THE PATENT REINSTATED

THIS PORTION MUST BE COMPLETED BY THE SIGNATORY OR SIGNATORIES

37 CFR 1.378(d) states: "Any petition under this section must be signed by an attorney or agent registered to practice before the Patent and Trademark Office, or by the patentee, the assignee, or other party in interest."

I certify, in accordance with 37 CFR 1.4(d)(4) that I am

◉ An attorney or agent registered to practice before the Patent and Trademark Office

○ A sole patentee

○ A joint patentee; I certify that I am authorized to sign this submission on behalf of all the other patentees.

○ A joint patentee; all of whom are signing this e-petition

○ The assignee of record of the entire interest

Patent Practitioner			
A signature of the applicant or representative is required in accordance with 37 CFR 1.33 and 10.18. Please see 37 CFR 1.4(d) for the form of the signature			
Signature	/Lance C. Venable/	Date (YYYY-MM-DD)	2009-12-17
Name	Lance C. Venable	Registration Number	41361

This collection of information is required by 37 CFR 1.378(c). The information is required to obtain or retain a benefit by the public which is to file (and by the USPTO to process) an application. Confidentiality is governed by 35 U.S.C. 122 and 37 CFR 1.11 and 1.14. This collection is estimated to take 1 hour to complete, including gathering, preparing, and submitting the completed application form to the USPTO. Time will vary depending upon the individual case. Any comments on the amount of time you require to complete this form and/ or suggestions for reducing this burden, should be sent to the Chief Information Officer, U.S. Patent and Trademark Office, U.S. Department of Commerce, P.O. Box 1450, Alexandria, VA 22313-1450. DO NOT SEND FEES OR COMPLETED FORMS TO THIS ADDRESS. **This form can only be used when in conjunction with EFS-Web. If this form is mailed to the USPTO, it may cause delays in reinstating the patent.**

Privacy Act Statement

The Privacy Act of 1974 (P.L. 93-579) requires that you be given certain information in connection with your submission of the attached form related to a patent application or patent. Accordingly, pursuant to the requirements of the Act, please be advised that: (1) the general authority for the collection of this information is 35 U.S.C. 2(b)(2); (2) furnishing of the information solicited is voluntary; and (3) the principal purpose for which the information is used by the U.S. Patent and Trademark Office is to process and/or examine your submission related to a patent application or patent. If you do not furnish the requested information, the U.S. Patent and Trademark Office may not be able to process and/or examine your submission, which may result in termination of proceedings or abandonment of the application or expiration of the patent.

The information provided by you in this form will be subject to the following routine uses:

1. The information on this form will be treated confidentially to the extent allowed under the Freedom of Information Act (5 U.S.C. 552) and the Privacy Act (5 U.S.C. 552a). Records from this system of records may be disclosed to the Department of Justice to determine whether the Freedom of Information Act requires disclosure of these records.

2. A record from this system of records may be disclosed, as a routine use, in the course of presenting evidence to a court, magistrate, or administrative tribunal, including disclosures to opposing counsel in the course of settlement negotiations.

3. A record in this system of records may be disclosed, as a routine use, to a Member of Congress submitting a request involving an individual, to whom the record pertains, when the individual has requested assistance from the Member with respect to the subject matter of the record.

4. A record in this system of records may be disclosed, as a routine use, to a contractor of the Agency having need for the information in order to perform a contract. Recipients of information shall be required to comply with the requirements of the Privacy Act of 1974, as amended, pursuant to 5 U.S.C. 552a(m).

5. A record related to an International Application filed under the Patent Cooperation Treaty in this system of records may be disclosed, as a routine use, to the International Bureau of the World Intellectual Property Organization, pursuant to the Patent Cooperation Treaty.

6. A record in this system of records may be disclosed, as a routine use, to another federal agency for purposes of National Security review (35 U.S.C. 181) and for review pursuant to the Atomic Energy Act (42 U.S.C. 218(c)).

7. A record from this system of records may be disclosed, as a routine use, to the Administrator, General Services, or his/her designee, during an inspection of records conducted by GSA as part of that agency's responsibility to recommend improvements in records management practices and programs, under authority of 44 U.S.C. 2904 and 2906. Such disclosure shall be made in accordance with the GSA regulations governing inspection of records for this purpose, and any other relevant (i.e., GSA or Commerce) directive. Such disclosure shall not be used to make determinations about individuals.

8. A record from this system of records may be disclosed, as a routine use, to the public after either publication of the application pursuant to 35 U.S.C. 122(b) or issuance of a patent pursuant to 35 U.S.C. 151. Further, a record may be disclosed, subject to the limitations of 37 CFR 1.14, as a routine use, to the public if the record was filed in an application which became abandoned or in which the proceedings were terminated and which application is referenced by either a published application, an application open to public inspections or an issued patent.

9. A record from this system of records may be disclosed, as a routine use, to a Federal, State, or local law enforcement agency, if the USPTO becomes aware of a violation or potential violation of law or regulation.

UNITED STATES PATENT AND TRADEMARK OFFICE

Commissioner for Patents
United States Patent and Trademark Office
P.O. Box 1450
Alexandria, VA 22313-1450
www.uspto.gov

In re Patent No. 6006677
Issue Date: December 28,1999
Application No. 09004389
Filed: January 8,1998
Attorney Docket No. 0389.04283

:

:DECISION GRANTING PETITION
:UNDER 37 CFR 1.378(c)

:

This is a decision on the electronic petition, filed January 29,2008 ,under 37 CFR 1.378(c) to accept the unintentionally delayed payment of the 7.5 year maintenance fee for the above-identified patent.

The petition is GRANTED.

The maintenance fee is accepted, and the above-identified patent reinstated as of January 29,2008 . This decision also constitutes notice that the fee has been accepted. An electronic copy of the petition and this decision has been created as an entry in an Image File Wrapper. Nevertheless, petitioner should print and retain an independent copy

Telephone inquires related to this electronic decision should be directed to the Electronic Business Center at 1-866-217-9197.

Approved for use through 04/30/2009. OMB 0651-0016
U.S. Patent and Trademark Office: U.S. DEPARTMENT OF COMMERCE
Under the Paperwork Reduction Act of 1995, no persons are required to respond to a collection of information unless it displays valid OMB control number.

PETITION TO ACCEPT UNINTENTIONALLY DELAYED PAYMENT OF MAINTENANCE FEE IN AN EXPIRED PATENT (37 CFR 1.378(c))

Patent Number	Issue Date (YYYY-MM-DD)	Application Number	Filing Date (YYYY-MM-DD)	Docket Number (if applicable)
6006677	1999-12-28	09004389	1998-01-08	RPC 438 PUS

CAUTION: Maintenance fee (and surcharge, if any) payment must correctly identify: (1) the patent number and (2) the application number of the actual U.S. application leading to issuance of that patent to ensure the fee(s) is/are associated with the correct patent. 37 CFR 1.366(c) and (d).

SMALL ENTITY
☐ Patentee claims, or has previously claimed, small entity status. See 37 CFR 1.27.

LOSS OF ENTITLEMENT TO SMALL ENTITY STATUS
☐ Patentee is no longer entitled to small entity status. See 37 CFR 1.27(g)

NOT Small Entity		Small Entity	
Fee	Code	Fee	Code
○ 3 ½ year	(1551)	○ 3 ½ year	(2551)
◉ 7 ½ year	(1552)	○ 7 ½ year	(2552)
○ 11 ½ year	(1553)	○ 11 ½ year	(2553)

SURCHARGE
The surcharge required by 37 CFR 1.20(i)(2) (Fee Code 1558) must be paid as a condition of accepting unintentionally delayed payment of the maintenance fee.

MAINTENANCE FEE (37 CFR 1.20(e)-(g))
The appropriate maintenance fee must be submitted with this petition.

STATEMENT
THE UNDERSIGNED CERTIFIES THAT THE DELAY IN PAYMENT OF THE MAINTENANCE FEE TO THIS PATENT WAS UNINTENTIONAL

PETITIONER(S) REQUEST THAT THE DELAYED PAYMENT OF THE MAINTENANCE FEE BE ACCEPTED AND THE PATENT REINSTATED

THIS PORTION MUST BE COMPLETED BY THE SIGNATORY OR SIGNATORIES

37 CFR 1.378(d) states: "Any petition under this section must be signed by an attorney or agent registered to practice before the Patent and Trademark Office, or by the patentee, the assignee, or other party in interest."

I certify, in accordance with 37 CFR 1.4(d)(4) that I am

◉ An attorney or agent registered to practice before the Patent and Trademark Office

○ A sole patentee

○ A joint patentee; I certify that I am authorized to sign this submission on behalf of all the other patentees.

○ A joint patentee; all of whom are signing this e-petition

○ The assignee of record of the entire interest

Patent Practitioner			
A signature of the applicant or representative is required in accordance with 37 CFR 1.33 and 10.18. Please see 37 CFR 1.4(d) for the form of the signature			
Signature	/John E. Carlson/	Date (YYYY-MM-DD)	2008-01-29
Name	John Carlson	Registration Number	37794

This collection of information is required by 37 CFR 1.378(c). The information is required to obtain or retain a benefit by the public which is to file (and by the USPTO to process) an application. Confidentiality is governed by 35 U.S.C. 122 and 37 CFR 1.11 and 1.14. This collection is estimated to take 1 hour to complete, including gathering, preparing, and submitting the completed application form to the USPTO. Time will vary depending upon the individual case. Any comments on the amount of time you require to complete this form and/ or suggestions for reducing this burden, should be sent to the Chief Information Officer, U.S. Patent and Trademark Office, U.S. Department of Commerce, P.O. Box 1450, Alexandria, VA 22313-1450. DO NOT SEND FEES OR COMPLETED FORMS TO THIS ADDRESS. **This form can only be used when in conjunction with EFS-Web. If this form is mailed to the USPTO, it may cause delays in reinstating the patent.**

Privacy Act Statement

The Privacy Act of 1974 (P.L. 93-579) requires that you be given certain information in connection with your submission of the attached form related to a patent application or patent. Accordingly, pursuant to the requirements of the Act, please be advised that: (1) the general authority for the collection of this information is 35 U.S.C. 2(b)(2); (2) furnishing of the information solicited is voluntary; and (3) the principal purpose for which the information is used by the U.S. Patent and Trademark Office is to process and/or examine your submission related to a patent application or patent. If you do not furnish the requested information, the U.S. Patent and Trademark Office may not be able to process and/or examine your submission, which may result in termination of proceedings or abandonment of the application or expiration of the patent.

The information provided by you in this form will be subject to the following routine uses:

1. The information on this form will be treated confidentially to the extent allowed under the Freedom of Information Act (5 U.S.C. 552) and the Privacy Act (5 U.S.C. 552a). Records from this system of records may be disclosed to the Department of Justice to determine whether the Freedom of Information Act requires disclosure of these record s.

2. A record from this system of records may be disclosed, as a routine use, in the course of presenting evidence to a court, magistrate, or administrative tribunal, including disclosures to opposing counsel in the course of settlement negotiations.

3. A record in this system of records may be disclosed, as a routine use, to a Member of Congress submitting a request involving an individual, to whom the record pertains, when the individual has requested assistance from the Member with respect to the subject matter of the record.

4. A record in this system of records may be disclosed, as a routine use, to a contractor of the Agency having need for the information in order to perform a contract. Recipients of information shall be required to comply with the requirements of the Privacy Act of 1974, as amended, pursuant to 5 U.S.C. 552a(m).

5. A record related to an International Application filed under the Patent Cooperation Treaty in this system of records may be disclosed, as a routine use, to the International Bureau of the World Intellectual Property Organization, pursuant to the Patent Cooperation Treaty.

6. A record in this system of records may be disclosed, as a routine use, to another federal agency for purposes of National Security review (35 U.S.C. 181) and for review pursuant to the Atomic Energy Act (42 U.S.C. 218(c)).

7. A record from this system of records may be disclosed, as a routine use, to the Administrator, General Services, or his/her designee, during an inspection of records conducted by GSA as part of that agency's responsibility to recommend improvements in records management practices and programs, under authority of 44 U.S.C. 2904 and 2906. Such disclosure shall be made in accordance with the GSA regulations governing inspection of records for this purpose, and any other relevant (i.e., GSA or Commerce) directive. Such disclosure shall not be used to make determinations about individuals.

8. A record from this system of records may be disclosed, as a routine use, to the public after either publication of the application pursuant to 35 U.S.C. 122(b) or issuance of a patent pursuant to 35 U.S.C. 151. Further, a record may be disclosed, subject to the limitations of 37 CFR 1.14, as a routine use, to the public if the record was filed in an application which became abandoned or in which the proceedings were terminated and which application is referenced by either a published application, an application open to public inspections or an issued patent.

9. A record from this system of records may be disclosed, as a routine use, to a Federal, State, or local law enforcement agency, if the USPTO becomes aware of a violation or potential violation of law or regulation.

UNITED STATES PATENT AND TRADEMARK OFFICE

Commissioner for Patents
United States Patent and Trademark Office
P.O. Box 1450
Alexandria, VA 22313-1450
www.uspto.gov

MOTS LAW, PLLC
1001 PENNSYLVANIA AVE. N.W.
SOUTH, SUITE 600
WASHINGTON DC 20004

COPY MAILED

NOV 27 2007

OFFICE OF PETITIONS

In re Application of	:	
Law, Peter K.	:	
Application No. 09/005,034	:	DECISION ON PETITION
Filed: January 9, 1998	:	
Title: MYOBLAST THERAPY FOR COMETIC TREATMENT	:	

This is a decision on the petition under the unintentional provisions of 37 CFR 1.137(b), filed October 31, 2007, to revive the above-identified application.

The petition is **GRANTED**.

The petition satisfies the requirements of 37 CFR 1.137(b) in that petitioner has supplied (1) the reply in the form of Amendment to the Specification, (2) the petition fee, and (3) a proper statement of unintentional delay.

Telephone inquiries concerning this decision should be directed to the undersigned at (571) 272-3206.

This matter is being referred to the Publishing Division for processing into a patent.

Liana Walsh
Petitions Examiner
Office of Petitions

Under the Paperwork Reduction Act of 1995, no persons are required to respond to a collection of information unless it displays valid OMB control number.

PETITION TO ACCEPT UNINTENTIONALLY DELAYED PAYMENT OF MAINTENANCE FEE IN AN EXPIRED PATENT (37 CFR 1.378(c))

Patent Number	Issue Date (YYYY-MM-DD)	Application Number	Filing Date (YYYY-MM-DD)	Docket Number (if applicable)
6196079	2001-03-06	09005061	1998-01-09	F551

CAUTION: Maintenance fee (and surcharge, if any) payment must correctly identify: (1) the patent number and (2) the application number of the actual U.S. application leading to issuance of that patent to ensure the fee(s) is/are associated with the correct patent. 37 CFR 1.366(c) and (d).

SMALL ENTITY
☒ Patentee claims, or has previously claimed, small entity status. See 37 CFR 1.27.

LOSS OF ENTITLEMENT TO SMALL ENTITY STATUS
☐ Patentee is no longer entitled to small entity status. See 37 CFR 1.27(g)

NOT Small Entity		Small Entity	
Fee	Code	Fee	Code
○ 3 ½ year	(1551)	◉ 3 ½ year	(2551)
○ 7 ½ year	(1552)	○ 7 ½ year	(2552)
○ 11 ½ year	(1553)	○ 11 ½ year	(2553)

SURCHARGE
The surcharge required by 37 CFR 1.20(i)(2) (Fee Code 1558) must be paid as a condition of accepting unintentionally delayed payment of the maintenance fee.

MAINTENANCE FEE (37 CFR 1.20(e)-(g))
The appropriate maintenance fee must be submitted with this petition.

STATEMENT
THE UNDERSIGNED CERTIFIES THAT THE DELAY IN PAYMENT OF THE MAINTENANCE FEE TO THIS PATENT WAS UNINTENTIONAL

PETITIONER(S) REQUEST THAT THE DELAYED PAYMENT OF THE MAINTENANCE FEE BE ACCEPTED AND THE PATENT REINSTATED

THIS PORTION MUST BE COMPLETED BY THE SIGNATORY OR SIGNATORIES

37 CFR 1.378(d) states: "Any petition under this section must be signed by an attorney or agent registered to practice before the Patent and Trademark Office, or by the patentee, the assignee, or other party in interest."

I certify, in accordance with 37 CFR 1.4(d)(4) that I am

◉ An attorney or agent registered to practice before the Patent and Trademark Office

○ A sole patentee

○ A joint patentee; I certify that I am authorized to sign this submission on behalf of all the other patentees.

○ A joint patentee; all of whom are signing this e-petition

○ The assignee of record of the entire interest

Patent Practitioner			
A signature of the applicant or representative is required in accordance with 37 CFR 1.33 and 10.18. Please see 37 CFR 1.4(d) for the form of the signature			
Signature	/Donald J Ranft/	Date (YYYY-MM-DD)	2006-11-16
Name	Donald J Ranft	Registration Number	53501

This collection of information is required by 37 CFR 1.378(c). The information is required to obtain or retain a benefit by the public which is to file (and by the USPTO to process) an application. Confidentiality is governed by 35 U.S.C. 122 and 37 CFR 1.11 and 1.14. This collection is estimated to take 1 hour to complete, including gathering, preparing, and submitting the completed application form to the USPTO. Time will vary depending upon the individual case. Any comments on the amount of time you require to complete this form and/ or suggestions for reducing this burden, should be sent to the Chief Information Officer, U.S. Patent and Trademark Office, U.S. Department of Commerce, P.O. Box 1450, Alexandria, VA 22313-1450. DO NOT SEND FEES OR COMPLETED FORMS TO THIS ADDRESS. **This form can only be used when in conjunction with EFS-Web. If this form is mailed to the USPTO, it may cause delays in reinstating the patent.**

Privacy Act Statement

The Privacy Act of 1974 (P.L. 93-579) requires that you be given certain information in connection with your submission of the attached form related to a patent application or patent. Accordingly, pursuant to the requirements of the Act, please be advised that: (1) the general authority for the collection of this information is 35 U.S.C. 2(b)(2); (2) furnishing of the information solicited is voluntary; and (3) the principal purpose for which the information is used by the U.S. Patent and Trademark Office is to process and/or examine your submission related to a patent application or patent. If you do not furnish the requested information, the U.S. Patent and Trademark Office may not be able to process and/or examine your submission, which may result in termination of proceedings or abandonment of the application or expiration of the patent.

The information provided by you in this form will be subject to the following routine uses:

1. The information on this form will be treated confidentially to the extent allowed under the Freedom of Information Act (5 U.S.C. 552) and the Privacy Act (5 U.S.C. 552a). Records from this system of records may be disclosed to the Department of Justice to determine whether the Freedom of Information Act requires disclosure of these record s.

2. A record from this system of records may be disclosed, as a routine use, in the course of presenting evidence to a court, magistrate, or administrative tribunal, including disclosures to opposing counsel in the course of settlement negotiations.

3. A record in this system of records may be disclosed, as a routine use, to a Member of Congress submitting a request involving an individual, to whom the record pertains, when the individual has requested assistance from the Member with respect to the subject matter of the record.

4. A record in this system of records may be disclosed, as a routine use, to a contractor of the Agency having need for the information in order to perform a contract. Recipients of information shall be required to comply with the requirements of the Privacy Act of 1974, as amended, pursuant to 5 U.S.C. 552a(m).

5. A record related to an International Application filed under the Patent Cooperation Treaty in this system of records may be disclosed, as a routine use, to the International Bureau of the World Intellectual Property Organization, pursuant to the Patent Cooperation Treaty.

6. A record in this system of records may be disclosed, as a routine use, to another federal agency for purposes of National Security review (35 U.S.C. 181) and for review pursuant to the Atomic Energy Act (42 U.S.C. 218(c)).

7. A record from this system of records may be disclosed, as a routine use, to the Administrator, General Services, or his/her designee, during an inspection of records conducted by GSA as part of that agency's responsibility to recommend improvements in records management practices and programs, under authority of 44 U.S.C. 2904 and 2906. Such disclosure shall be made in accordance with the GSA regulations governing inspection of records for this purpose, and any other relevant (i.e., GSA or Commerce) directive. Such disclosure shall not be used to make determinations about individuals.

8. A record from this system of records may be disclosed, as a routine use, to the public after either publication of the application pursuant to 35 U.S.C. 122(b) or issuance of a patent pursuant to 35 U.S.C. 151. Further, a record may be disclosed, subject to the limitations of 37 CFR 1.14, as a routine use, to the public if the record was filed in an application which became abandoned or in which the proceedings were terminated and which application is referenced by either a published application, an application open to public inspections or an issued patent.

9. A record from this system of records may be disclosed, as a routine use, to a Federal, State, or local law enforcement agency, if the USPTO becomes aware of a violation or potential violation of law or regulation.

UNITED STATES PATENT AND TRADEMARK OFFICE

Commissioner for Patents
United States Patent and Trademark Office
P.O. Box 1450
Alexandria, VA 22313-1450
www.uspto.gov

TOWNSEND AND TOWNSEND AND CREW, LLP
TWO EMBARCADERO CENTER
EIGHTH FLOOR
SAN FRANCISCO, CA 94111-3834

COPY MAILED

JUN 16 2006

OFFICE OF PETITIONS

In re Patent of	:	
Richards et al et al.	:	
Application No. 09/005,181	:	
Filed: January 9, 1998	:	ON PETITION
Patent No. 6,178,207	:	
Issued: January 23, 2001	:	
Title of Invention:	:	
AIRCRAFT COMBAT TRAINING SIGNAL	:	
PROCESSING SYSTEM	:	

This is a decision on the petition under 37 CFR § 1.378(c), filed May 2, 2005, to reinstate the above-identified patent.

The petition is **GRANTED**.

The patent issued January 23, 2001. The grace period for paying the three and one-half (3½) year maintenance fee expired on January 23, 2005. Therefore, since this petition was filed within twenty-four months after the six-month grace period provided in 37 CFR 1.362(e), this petition was timely filed under the provisions of 37 CFR 1.378(c).

Accordingly, the maintenance fee in this case is hereby accepted and the above-identified patent is hereby reinstated as of the mail date of this decision.

The Revocation of Power of Attorney and New Power of Attorney and Change of Correspondence Address has been entered. Applicant is advised that requests for changes of correspondence address, powers of attorney, revocations of powers of attorney, withdrawal of attorney and submissions under 37 CFR 1.501, Designation of, or changes to, a fee address should be addressed to Mail Stop M Correspondence.

The file is being forwarded to the files repository.

Telephone inquiries concerning this matter should be directed to the undersigned at (571) 272-3232.

Derek L. Woods
Attorney
Office of Petitions

UNITED STATES PATENT AND TRADEMARK OFFICE

Commissioner for Patents
United States Patent and Trademark Office
P.O. Box 1450
Alexandria, VA 22313-1450
www.uspto.gov

In re Patent No. 5920923
Issue Date: July 13,1999
Application No. 09005258
Filed: January 9,1998
Attorney Docket No. PENN-001

:

:DECISION GRANTING PETITION
:UNDER 37 CFR 1.378(c)

:

This is a decision on the electronic petition, filed October 2,2007 ,under 37 CFR 1.378(c) to accept the unintentionally delayed payment of the 7.5 year maintenance fee for the above-identified patent.

The petition is GRANTED.

The maintenance fee is accepted, and the above-identified patent reinstated as of October 2,2007 . This decision also constitutes notice that the fee has been accepted. An electronic copy of the petition and this decision has been created as an entry in an Image File Wrapper. Nevertheless, petitioner should print and retain an independent copy

Telephone inquires related to this electronic decision should be directed to the Electronic Business Center at 1-866-217-9197.

Under the Paperwork Reduction Act of 1995, no persons are required to respond to a collection of information unless it displays valid OMB control number.

PETITION TO ACCEPT UNINTENTIONALLY DELAYED PAYMENT OF MAINTENANCE FEE IN AN EXPIRED PATENT (37 CFR 1.378(c))

Patent Number	Issue Date (YYYY-MM-DD)	Application Number	Filing Date (YYYY-MM-DD)	Docket Number (if applicable)
5920923	1999-07-13	09005258	1998-01-09	PENN-001

CAUTION: Maintenance fee (and surcharge, if any) payment must correctly identify: (1) the patent number and (2) the application number of the actual U.S. application leading to issuance of that patent to ensure the fee(s) is/are associated with the correct patent. 37 CFR 1.366(c) and (d).

SMALL ENTITY
☒ Patentee claims, or has previously claimed, small entity status. See 37 CFR 1.27.

LOSS OF ENTITLEMENT TO SMALL ENTITY STATUS
☐ Patentee is no longer entitled to small entity status. See 37 CFR 1.27(g)

NOT Small Entity		Small Entity	
Fee	Code	Fee	Code
○ 3 ½ year	(1551)	○ 3 ½ year	(2551)
○ 7 ½ year	(1552)	◉ 7 ½ year	(2552)
○ 11 ½ year	(1553)	○ 11 ½ year	(2553)

SURCHARGE
The surcharge required by 37 CFR 1.20(i)(2) (Fee Code 1558) must be paid as a condition of accepting unintentionally delayed payment of the maintenance fee.

MAINTENANCE FEE (37 CFR 1.20(e)-(g))
The appropriate maintenance fee must be submitted with this petition.

STATEMENT
THE UNDERSIGNED CERTIFIES THAT THE DELAY IN PAYMENT OF THE MAINTENANCE FEE TO THIS PATENT WAS UNINTENTIONAL

PETITIONER(S) REQUEST THAT THE DELAYED PAYMENT OF THE MAINTENANCE FEE BE ACCEPTED AND THE PATENT REINSTATED

THIS PORTION MUST BE COMPLETED BY THE SIGNATORY OR SIGNATORIES

37 CFR 1.378(d) states: "Any petition under this section must be signed by an attorney or agent registered to practice before the Patent and Trademark Office, or by the patentee, the assignee, or other party in interest."

I certify, in accordance with 37 CFR 1.4(d)(4) that I am

○ An attorney or agent registered to practice before the Patent and Trademark Office

◉ A sole patentee

○ A joint patentee; I certify that I am authorized to sign this submission on behalf of all the other patentees.

○ A joint patentee; all of whom are signing this e-petition

○ The assignee of record of the entire interest

Sole Patentee			
A signature of the applicant or representative is required in accordance with 37 CFR 1.33 and 10.18. Please see 37 CFR 1.4(d) for the form of the signature.			
Signature	/Penn Jillette/	Date (YYYY-MM-DD)	2007-10-02
Name	PENN JILLETTE		

This collection of information is required by 37 CFR 1.378(c). The information is required to obtain or retain a benefit by the public which is to file (and by the USPTO to process) an application. Confidentiality is governed by 35 U.S.C. 122 and 37 CFR 1.11 and 1.14. This collection is estimated to take 1 hour to complete, including gathering, preparing, and submitting the completed application form to the USPTO. Time will vary depending upon the individual case. Any comments on the amount of time you require to complete this form and/ or suggestions for reducing this burden, should be sent to the Chief Information Officer, U.S. Patent and Trademark Office, U.S. Department of Commerce, P.O. Box 1450, Alexandria, VA 22313-1450. DO NOT SEND FEES OR COMPLETED FORMS TO THIS ADDRESS. **This form can only be used when in conjunction with EFS-Web. If this form is mailed to the USPTO, it may cause delays in reinstating the patent.**

Privacy Act Statement

The Privacy Act of 1974 (P.L. 93-579) requires that you be given certain information in connection with your submission of the attached form related to a patent application or patent. Accordingly, pursuant to the requirements of the Act, please be advised that: (1) the general authority for the collection of this information is 35 U.S.C. 2(b)(2); (2) furnishing of the information solicited is voluntary; and (3) the principal purpose for which the information is used by the U.S. Patent and Trademark Office is to process and/or examine your submission related to a patent application or patent. If you do not furnish the requested information, the U.S. Patent and Trademark Office may not be able to process and/or examine your submission, which may result in termination of proceedings or abandonment of the application or expiration of the patent.

The information provided by you in this form will be subject to the following routine uses:

1. The information on this form will be treated confidentially to the extent allowed under the Freedom of Information Act (5 U.S.C. 552) and the Privacy Act (5 U.S.C. 552a). Records from this system of records may be disclosed to the Department of Justice to determine whether the Freedom of Information Act requires disclosure of these record s.

2. A record from this system of records may be disclosed, as a routine use, in the course of presenting evidence to a court, magistrate, or administrative tribunal, including disclosures to opposing counsel in the course of settlement negotiations.

3. A record in this system of records may be disclosed, as a routine use, to a Member of Congress submitting a request involving an individual, to whom the record pertains, when the individual has requested assistance from the Member with respect to the subject matter of the record.

4. A record in this system of records may be disclosed, as a routine use, to a contractor of the Agency having need for the information in order to perform a contract. Recipients of information shall be required to comply with the requirements of the Privacy Act of 1974, as amended, pursuant to 5 U.S.C. 552a(m).

5. A record related to an International Application filed under the Patent Cooperation Treaty in this system of records may be disclosed, as a routine use, to the International Bureau of the World Intellectual Property Organization, pursuant to the Patent Cooperation Treaty.

6. A record in this system of records may be disclosed, as a routine use, to another federal agency for purposes of National Security review (35 U.S.C. 181) and for review pursuant to the Atomic Energy Act (42 U.S.C. 218(c)).

7. A record from this system of records may be disclosed, as a routine use, to the Administrator, General Services, or his/her designee, during an inspection of records conducted by GSA as part of that agency's responsibility to recommend improvements in records management practices and programs, under authority of 44 U.S.C. 2904 and 2906. Such disclosure shall be made in accordance with the GSA regulations governing inspection of records for this purpose, and any other relevant (i.e., GSA or Commerce) directive. Such disclosure shall not be used to make determinations about individuals.

8. A record from this system of records may be disclosed, as a routine use, to the public after either publication of the application pursuant to 35 U.S.C. 122(b) or issuance of a patent pursuant to 35 U.S.C. 151. Further, a record may be disclosed, subject to the limitations of 37 CFR 1.14, as a routine use, to the public if the record was filed in an application which became abandoned or in which the proceedings were terminated and which application is referenced by either a published application, an application open to public inspections or an issued patent.

9. A record from this system of records may be disclosed, as a routine use, to a Federal, State, or local law enforcement agency, if the USPTO becomes aware of a violation or potential violation of law or regulation.

UNITED STATES PATENT AND TRADEMARK OFFICE

Commissioner for Patents
United States Patent and Trademark Office
P.O. Box 1450
Alexandria, VA 22313-1450
www.uspto.gov

BELL, BOYD & LLOYD, LLC
PO BOX 1135
CHICAGO IL 60690-1135

COPY MAILED

MAR 0 2 2006

OFFICE OF PETITIONS

In re Application of :
Thomas Mark Levergood et al. :
Application No. 09/005,479 : ON PETITION
Filed: January 12, 1998 :
Attorney Docket No. OMI95-01A :

This is a decision on the petition filed January 9, 2006 under 37 CFR 1.137 (b) to revive the above-identified application.

The petition is **GRANTED**.

In response to a Final Office Action mailed March 31, 2004, a Notice of Appeal was filed October 5, 2004 (certificate of mail date September 30, 2004).[1] The above-identified application became abandoned as a result of petitioner's failure to file an appeal brief (and fee required by 37 CFR 1.17(c)) within the time period provided in 37 CFR 1.192(a). As an appeal brief (and appeal brief fee) was not filed within two (2) months of the Notice of Appeal filed December 21, 2004, and no extensions of time under the provisions of 37 CFR 1.136(a) were obtained, the appeal was dismissed and the proceedings as to the rejected claims were terminated. See 37 CFR 1.192(b) & 1.197(c). As no claim was allowed, the-above-identified application became abandoned on December 6, 2004. See MPEP 1215.04.

The instant petition and this decision precede the mailing of the Notice of Abandonment.

Petitioner has submitted a Request for Continued Examination (RCE) and requests that the previously filed amendment be used as the submission required under 37 CFR 1.114.

The fees for the petition to revive ($1500.00) and the RCE ($790.00) have been applied. A request for a five month extension of time was also filed with the instant petition. However, pursuant to 37 CFR 1.136, an extension of time must be filed prior to the expiration of the maximum period obtainable for reply to avoid abandonment. Accordingly, since the $2160.00 extension of time fee submitted with the petition on January 9, 2006, was subsequent to the maximum period obtainable for reply, this fee

[1] A two month extension of time request was filed September 3, 2004 and a one month extension of time was filed October 4, 2004.

is unnecessary and will be credited to counsel's deposit account no. 50-1432.

The request for continued examination (RCE) of this application under 37 CFR 1.114 is being forwarded to Technology Center 2145 for processing.

Telephone inquiries concerning this matter may be directed to the undersigned Petitions Attorney at (571) 272-3212.

Patricia Faison-Ball

Patricia Faison-Ball
Senior Petitions Attorney
Office of Petitions

UNITED STATES PATENT AND TRADEMARK OFFICE

Commissioner for Patents
United States Patent and Trademark Office
P.O. Box 1450
Alexandria, VA 22313-1450
www.uspto.gov

Paper No. 15

ARENT FOX KINTNER PLOTKIN & KAHN PLLC
1050 CONNECTICUT AVENUE, NW, SUITE 400
WASHINGTON DC 20036-5339

COPY MAILED
MAY 2 1 2004
OFFICE OF PETITIONS

In re Reexamination Proceeding No. 90/006,250
For Patent No. 5,972,382
Issue Date: October 26, 1999
Attorney Docket No. 108064-00069

ON PETITION

This is a decision on the petition filed February 4, 2004, which is being treated as a petition under 37 CFR 1.181 to review the decision of the Certificates of Correction Branch which refused, absent a petition under 37 CFR 1.183, to accept the correction of the assignee on the front page of the Reexamination Certificate published on March 4, 2003.

The petition is **dismissed**.

Petitioner requests issuance of a certificate of correction in the reexamination proceeding certificate in the names of "Sabinsa Corporation, Piscataway, NJ (US) and Sami Chemicals & Extracts (P) Ltd., Bangalore (IN)."

Petitioner states that he disagrees with the decision of the Certificates of Correction Branch mailed December 3, 2003 insofar as it requires a petition to correct the assignee data on the Reexamination Certificate, "because the assignment of an undivided one-half interest by Sabinsa Corporation to Sami Chemicals & Extracts (P) Ltd., Bangalore, India was recorded on September 6, 2000, after the patent had been issued and before the mailing of the Notice of Intent to Issue Reexamination Certificate." Petitioner further complains that "[t]he granting of the Reexamination Certificate did not involve any Issue Fee Transmittal that requires applicants to provide the correct names of the assignees."

Petitioner is correct in asserting that a petition under 37 CFR 1.183 to correct or change the assignee data is not the appropriate avenue of relief as there is no like provision for printing assignee data on the Reexamination Certificate as there is on a regular utility, design, or plant application. Unfortunately, petitioner is incorrect in assuming there is an error in the patent in not naming Sami as a co-assignee, much less that there is an error correctable by a Certificate of Correction.

The communication from the Certificates of Correction Branch erred in suggesting that a petition under 37 CFR 1.183 was required. Rather, that only applies when 37 CFR 3.81 was not complied with at the time the issue fee was remitted. *See* MPEP 1481. However, 37 CFR 3.81 requires that the assignment be already recorded, or submitted for recordation, at the time the issue fee is paid. That only can occur when the application is pending and the patent has not yet issued. In this regard, petitioner's attention is directed to 35 U.S.C. § 152, which states:

> Patents may be granted to the assignee of the inventor of record in the Patent and Trademark Office, upon the application made and the specification sworn to by the inventor, except as otherwise provided in this title.

Thus, the USPTO may issue a patent to the assignee of record of a pending application, or an assignee whose assignment was submitted for recordation against a pending application, at the USPTO. This statute, however, makes no provision for issuance of a patent to the assignee by way of an assignment recorded, or submitted for recordation **after** issuance of the patent as the application is then no longer pending but is an issued patent. That is, the statute does not authorize the USPTO to issue a patent to an assignee by way of an assignment that is recorded, or has been submitted for recordation, **after** the patent has issued. Likewise, this statute does not provide for a reexamination certificate to reflect that the previously issued patent in fact issued to an assignee not of record, or submitted for recordation at the time the patent issued. In other words, any change in the record assignee **after** issuance of the patent is immaterial as to whom the patent could have issued while it was pending.

The Reexamination Certificate is merely a document which reflects the status of all claims upon conclusion of the reexamination proceedings. *See* 35 U.S.C. § 307. A Reexamination proceeding is a proceeding applied to an issued patent, not to a pending application. *See* 35 U.S.C. § 305. There is no like provision in reexamination proceedings to either provide assignee data to be printed on the Reexamination Certificate or to request a correction or change to the assignee data. Further, as pointed out by petitioner herein, an assignment in the names of both of the assignees sought to be added on the Reexamination Certificate was submitted for recordation after the issuance of the original patent. Petitioner is reminded that an application may issue in the name(s) of the assignee(s) consistent with the application's assignment where a request for such issuance along with the processing fee is submitted after the date of payment of the issue fee, **but prior to issuance of the patent,** provided the assignment has been previously recorded or submitted for recording in the Office. If the assignment had been recorded or submitted for recordation **prior to issuance of the original patent**, and there was a discrepancy in the assignee's name between what was recorded or submitted for recordation, and what appeared on the as-printed

patent, then it would have been appropriate for issuance of a Certificate of Correction in the original patent as suggested by Certificates of Correction Branch. In view of the circumstances of this case, issuance of a Certificate of Correction would be improper and as such none will be forthcoming.

In other words, there is no error in the original patent in not reflecting the post-issuance conveyance of some of Sabinsa Corporation's rights in this patent to Sami Chemicals & Extracts. The reexamination proceeding did not, and could not, change this circumstance. There is simply no error correctable in this patent within the meaning of 35 U.S.C. § 254 or even § 255. A Certificate of Correction does not lie and will not be issued.

A copy of this decision is also being placed in the file of U.S. Patent No. 5,972,382, which is the patent subject of Reexamination Proceeding 90/006,250.

This file is being returned to the Files Repository.

Any questions concerning this matter may be directed to the undersigned at (703) 305-8680.

Frances Hicks

Frances Hicks
Petitions Examiner
Office of Petitions
Office of the Deputy Commissioner
for Patent Examination Policy

Under the Paperwork Reduction Act of 1995, no persons are required to respond to a collection of information unless it displays valid OMB control number.

PETITION TO ACCEPT UNINTENTIONALLY DELAYED PAYMENT OF MAINTENANCE FEE IN AN EXPIRED PATENT (37 CFR 1.378(c))

Patent Number	Issue Date (YYYY-MM-DD)	Application Number	Filing Date (YYYY-MM-DD)	Docket Number (if applicable)
5,999,433	1999-12-07	09/005,669	1998-01-12	35878.002

CAUTION: Maintenance fee (and surcharge, if any) payment must correctly identify: (1) the patent number and (2) the application number of the actual U.S. application leading to issuance of that patent to ensure the fee(s) is/are associated with the correct patent. 37 CFR 1.366(c) and (d).

SMALL ENTITY
☒ Patentee claims, or has previously claimed, small entity status. See 37 CFR 1.27.

LOSS OF ENTITLEMENT TO SMALL ENTITY STATUS
☐ Patentee is no longer entitled to small entity status. See 37 CFR 1.27(g)

NOT Small Entity		Small Entity	
Fee	Code	Fee	Code
○ 3 ½ year	(1551)	○ 3 ½ year	(2551)
○ 7 ½ year	(1552)	◉ 7 ½ year	(2552)
○ 11 ½ year	(1553)	○ 11 ½ year	(2553)

SURCHARGE
The surcharge required by 37 CFR 1.20(i)(2) (Fee Code 1558) must be paid as a condition of accepting unintentionally delayed payment of the maintenance fee.

MAINTENANCE FEE (37 CFR 1.20(e)-(g))
The appropriate maintenance fee must be submitted with this petition.

STATEMENT
THE UNDERSIGNED CERTIFIES THAT THE DELAY IN PAYMENT OF THE MAINTENANCE FEE TO THIS PATENT WAS UNINTENTIONAL

PETITIONER(S) REQUEST THAT THE DELAYED PAYMENT OF THE MAINTENANCE FEE BE ACCEPTED AND THE PATENT REINSTATED

THIS PORTION MUST BE COMPLETED BY THE SIGNATORY OR SIGNATORIES

37 CFR 1.378(d) states: "Any petition under this section must be signed by an attorney or agent registered to practice before the Patent and Trademark Office, or by the patentee, the assignee, or other party in interest."

I certify, in accordance with 37 CFR 1.4(d)(4) that I am

◉ An attorney or agent registered to practice before the Patent and Trademark Office

○ A sole patentee

○ A joint patentee; I certify that I am authorized to sign this submission on behalf of all the other patentees.

○ A joint patentee; all of whom are signing this e-petition

○ The assignee of record of the entire interest

Patent Practitioner			
A signature of the applicant or representative is required in accordance with 37 CFR 1.33 and 10.18. Please see 37 CFR 1.4(d) for the form of the signature			
Signature	/josephleone/	Date (YYYY-MM-DD)	2008-05-30
Name	Joseph T. Leone	Registration Number	37170

This collection of information is required by 37 CFR 1.378(c). The information is required to obtain or retain a benefit by the public which is to file (and by the USPTO to process) an application. Confidentiality is governed by 35 U.S.C. 122 and 37 CFR 1.11 and 1.14. This collection is estimated to take 1 hour to complete, including gathering, preparing, and submitting the completed application form to the USPTO. Time will vary depending upon the individual case. Any comments on the amount of time you require to complete this form and/ or suggestions for reducing this burden, should be sent to the Chief Information Officer, U.S. Patent and Trademark Office, U.S. Department of Commerce, P.O. Box 1450, Alexandria, VA 22313-1450. DO NOT SEND FEES OR COMPLETED FORMS TO THIS ADDRESS. **This form can only be used when in conjunction with EFS-Web. If this form is mailed to the USPTO, it may cause delays in reinstating the patent.**

Privacy Act Statement

The Privacy Act of 1974 (P.L. 93-579) requires that you be given certain information in connection with your submission of the attached form related to a patent application or patent. Accordingly, pursuant to the requirements of the Act, please be advised that: (1) the general authority for the collection of this information is 35 U.S.C. 2(b)(2); (2) furnishing of the information solicited is voluntary; and (3) the principal purpose for which the information is used by the U.S. Patent and Trademark Office is to process and/or examine your submission related to a patent application or patent. If you do not furnish the requested information, the U.S. Patent and Trademark Office may not be able to process and/or examine your submission, which may result in termination of proceedings or abandonment of the application or expiration of the patent.

The information provided by you in this form will be subject to the following routine uses:

1. The information on this form will be treated confidentially to the extent allowed under the Freedom of Information Act (5 U.S.C. 552) and the Privacy Act (5 U.S.C. 552a). Records from this system of records may be disclosed to the Department of Justice to determine whether the Freedom of Information Act requires disclosure of these record s.

2. A record from this system of records may be disclosed, as a routine use, in the course of presenting evidence to a court, magistrate, or administrative tribunal, including disclosures to opposing counsel in the course of settlement negotiations.

3. A record in this system of records may be disclosed, as a routine use, to a Member of Congress submitting a request involving an individual, to whom the record pertains, when the individual has requested assistance from the Member with respect to the subject matter of the record.

4. A record in this system of records may be disclosed, as a routine use, to a contractor of the Agency having need for the information in order to perform a contract. Recipients of information shall be required to comply with the requirements of the Privacy Act of 1974, as amended, pursuant to 5 U.S.C. 552a(m).

5. A record related to an International Application filed under the Patent Cooperation Treaty in this system of records may be disclosed, as a routine use, to the International Bureau of the World Intellectual Property Organization, pursuant to the Patent Cooperation Treaty.

6. A record in this system of records may be disclosed, as a routine use, to another federal agency for purposes of National Security review (35 U.S.C. 181) and for review pursuant to the Atomic Energy Act (42 U.S.C. 218(c)).

7. A record from this system of records may be disclosed, as a routine use, to the Administrator, General Services, or his/her designee, during an inspection of records conducted by GSA as part of that agency's responsibility to recommend improvements in records management practices and programs, under authority of 44 U.S.C. 2904 and 2906. Such disclosure shall be made in accordance with the GSA regulations governing inspection of records for this purpose, and any other relevant (i.e., GSA or Commerce) directive. Such disclosure shall not be used to make determinations about individuals.

8. A record from this system of records may be disclosed, as a routine use, to the public after either publication of the application pursuant to 35 U.S.C. 122(b) or issuance of a patent pursuant to 35 U.S.C. 151. Further, a record may be disclosed, subject to the limitations of 37 CFR 1.14, as a routine use, to the public if the record was filed in an application which became abandoned or in which the proceedings were terminated and which application is referenced by either a published application, an application open to public inspections or an issued patent.

9. A record from this system of records may be disclosed, as a routine use, to a Federal, State, or local law enforcement agency, if the USPTO becomes aware of a violation or potential violation of law or regulation.

UNITED STATES PATENT AND TRADEMARK OFFICE

Commissioner for Patents
United States Patent and Trademark Office
P.O. Box 1450
Alexandria, VA 22313-1450
www.uspto.gov

In re Patent No. 5999433
Issue Date: December 7,1999
Application No. 09005669
Filed: January 12,1998
Attorney Docket No. 97-P-5138

:
:DECISION GRANTING PETITION
:UNDER 37 CFR 1.378(c)
:

This is a decision on the electronic petition, filed May 30,2008 ,under 37 CFR 1.378(c) to accept the unintentionally delayed payment of the 7.5 year maintenance fee for the above-identified patent.

The petition is GRANTED.

The maintenance fee is accepted, and the above-identified patent reinstated as of May 30,2008 . This decision also constitutes notice that the fee has been accepted. An electronic copy of the petition and this decision has been created as an entry in an Image File Wrapper. Nevertheless, petitioner should print and retain an independent copy

Telephone inquires related to this electronic decision should be directed to the Electronic Business Center at 1-866-217-9197.

UNITED STATES PATENT AND TRADEMARK OFFICE

Commissioner for Patents
United States Patent and Trademark Office
Washington, D.C. 20231
www.uspto.gov

Paper No. 11

CHERYL H. AGRIS
ATTORNEY AT LAW
P.O. BOX 806
PELHAM, NY 10803

COPY MAILED

NOV 0 2 2000

**OFFICE OF PETITIONS
A/C PATENTS**

In re Application of	:	
Robert W. Brocia	:	
Application No. 09/005,711	:	ON PETITION
Filed: January 12, 1998	:	
Attorney Docket No. RO-11,003	:	

This is a decision on the petition under 37 CFR 1.137(b), filed October 17, 2000, to revive the above-identified application.

The petition is **GRANTED**.

This application became abandoned for failure to timely reply to the Office action mailed February 4, 1999. Accordingly, this application became abandoned on May 5, 1999. A Notice of Abandonment was mailed on October 8, 1999.

Pursuant to 37 CFR 1.136, an extension of time must be filed prior to the expiration of the maximum period obtainable for reply to avoid abandonment. Accordingly, since the $445.00 extension of time submitted with the petition on October 17, 2000 was subsequent to the maximum period obtainable for reply, petitioner may request a refund of this fee by writing to the Office of Finance, Refund Section. A copy of this decision should accompany petitioner's request.

The Power of Attorney and change of correspondence address, submitted October 17, 2000, has been made of record.

The application file is being forwarded to Technology Center 1600 for processing the CPA

Telephone inquiries concerning this matter may be directed to the undersigned at (703) 306-9200.

Edward J. Tannouse
Petitions Attorney
Office of Petitions
Office of the Deputy Commissioner
for Patent Examination Policy

UNITED STATES PATENT AND TRADEMARK OFFICE

Commissioner for Patents
United States Patent and Trademark Office
Washington, D.C. 20231
www.uspto.gov

Paper No. 26

Robert W. Brocia
15 Moore Road
Bronxville, NY 10708

COPY MAILED

MAR 2 6 2003

OFFICE OF PETITIONS

In re Application of
Robert W. Brocia
Application No. 09/005,711
Filed: January 12, 1998
Attorney Docket No. RO-11.003

ON PETITION

This is a decision on the petition under 37 CFR 1.137(b), filed February 25, 2003, to revive the above-identified application.

The petition is **GRANTED**.

The above-identified application became abandoned as a result of petitioner's failure to file an appeal brief (and fee required by 37 CFR 1.17(c)) within the time period provided in 37 CFR 1.192(a). As an appeal brief (and appeal brief fee) was not filed within two (2) months of the Notice of Appeal filed August 15, 2002 and no extensions of time under the provisions of 37 CFR 1.136(a) were obtained, the appeal was dismissed and the proceedings as to the rejected claims were terminated. See 37 CFR 1.192(b) & 1.197(c). As no claim was allowed, the-above-identified application became abandoned on October 16, 2002. See MPEP 1215.04.

The above-identified application is being revived solely for purposes of continuity with a continued prosecution application (CPA) filed on February 25, 2003.

Telephone inquiries concerning this decision should be directed to Latrice Bond at (703) 308-6911.

The application file is being forwarded to Technology Center AU 1651 for processing the CPA filed with the instant petition.

Latrice Bond

Latrice Bond
Paralegal Specialist
Office of Petitions
Office of the Deputy Commissioner
For Patent Examination Policy

UNITED STATES PATENT AND TRADEMARK OFFICE

COMMISSIONER FOR PATENTS
UNITED STATES PATENT AND TRADEMARK OFFICE
P.O. BOX 1450
ALEXANDRIA, VA 22313-1450
www.uspto.gov

Paper No. 33

COPY MAILED

APR 27 2004

OFFICE OF PETITIONS

Kate H. Murashige
Morrison & Foerster LLP
3811 Valley Centre Drive, Suite 500
San Diego, CA 92130

In re Application of Robert W. BROCIA Application No. 09/005,711 Filed: 01/12/1998 Attorney Docket No. 527832000300	: : : : :	DECISION ON PETITION 37 CFR 1.137(b)

This is a decision on the petition under 37 CFR 1.137(b), filed October 20, 2003, to revive the above-identified application.

The petition is **GRANTED**.

THE TWO MONTH PERIOD FOR FILING THE APPEAL BRIEF IN TRIPLICATE, ALONG WITH THE FEE REQUIRED BY LAW, STARTS WITH THIS MAILING. EXTENSIONS OF TIME UNDER 37 CFR 1.136(a) ARE AVAILABLE.

Petitioner has met the requirements for filing a grantable petition under 37 CFR 1.137(b).

An extension of time under 37 CFR 1.136 must be filed prior to the expiration of the maximum extendable period for reply. See In re Application of S., 8 USPQ2d 1630, 1631 (Comm'r Pats. 1988). Accordingly, since the $475.00 extension of time submitted with the petition on October 20, 2003 was subsequent to the maximum extendable period for reply, this fee is unnecessary and will be credited to petitioner's deposit account 03-1952.

Telephone inquiries concerning this decision should be directed to Marlon Fletcher at (703) 305-4066 or, in his absence to the undersigned at (703) 308-3865.

The application file is being forwarded to Technology Center 1600 to await petitioner's brief on appeal.

BethAnne Davoan
Petitions Examiner
Office of Petitions
Office of the Deputy Commissioner
for Patent Examination Policy

UNITED STATES PATENT AND TRADEMARK OFFICE

Commissioner for Patents
United States Patent and Trademark Office
P.O. Box 1450
Alexandria, VA 22313-1450
www.uspto.gov

MORRISON & FOERSTER LLP
3811 VALLEY CENTRE DRIVE
SUITE 500
SAN DIEGO CA 92130-2332

In re Application of: Robert W. Brocia. Serial No.: 09/005,711 Filed: January 12, 1998 Attorney Docket No.: RO-11.003	: : : : :	DECISION ON PETITION TO RESCIND ABANDONMENT

This is in response to applicant's petition under 37 CFR § 1.181(a) filed on July 12, 2004, requesting withdrawal of the holding of abandonment based on the fact that applicant is entitled to five one-month extensions under 37 CFR § 1.136 (a).

A review of the file history shows that a Petition to Revive was mailed April 27, 2004, setting a two-month period for filing the Appeal Brief in triplicate along with the fee required by law, starting with the mailing date of April 27, 2004. Under 37 CFR § 1.136 (a), five one-month extensions are available with appropriate payment of fees, and thus, applicant has until November 27, 2004 to file the Appeal Brief. Since the period for response has not yet expired, the Notice of Abandonment is in error.

Applicant's petition is **GRANTED**. The application is restored to pending status with the mailing date of this decision.

Should there be any questions about this decision, please contact Marianne C. Seidel by letter addressed to Director, TC 1600, at the address listed above, or by telephone at 571-272-0584 or by facsimile at 703-872-9306.

Bruce Kisliuk
Director, Technology Center 1600

UNITED STATES PATENT AND TRADEMARK OFFICE

Commissioner for Patents
United States Patent and Trademark Office
P.O. Box 1450
Alexandria, VA 22313-1450
www.uspto.gov

In re Patent No. 6070797
Issue Date: June 6,2000
Application No. 09006161
Filed: January 13,1998
Attorney Docket No. CAS 103

:
:DECISION GRANTING PETITION
:UNDER 37 CFR 1.378(c)
:

This is a decision on the electronic petition, filed December 2,2008 ,under 37 CFR 1.378(c) to accept the unintentionally delayed payment of the 7.5 year maintenance fee for the above-identified patent.

The petition is **GRANTED**.

The maintenance fee is accepted, and the above-identified patent reinstated as of December 2,2008 .
This decision also constitutes notice that the fee has been accepted. An electronic copy of the petition and this decision has been created as an entry in the Image File Wrapper. Nevertheless, petitioner should print and retain an independent copy.

Telephone inquiries related to this electronic decision should be directed to the Electronic Business Center at 1-866-217-9197.

Under the Paperwork Reduction Act of 1995, no persons are required to respond to a collection of information unless it displays valid OMB control number.

PETITION TO ACCEPT UNINTENTIONALLY DELAYED PAYMENT OF MAINTENANCE FEE IN AN EXPIRED PATENT (37 CFR 1.378(c))

Patent Number	Issue Date (YYYY-MM-DD)	Application Number	Filing Date (YYYY-MM-DD)	Docket Number (if applicable)
6,070,797	2000-06-06	09/006,161	1998-01-13	CAS 103

CAUTION: Maintenance fee (and surcharge, if any) payment must correctly identify: (1) the patent number and (2) the application number of the actual U.S. application leading to issuance of that patent to ensure the fee(s) is/are associated with the correct patent. 37 CFR 1.366(c) and (d).

SMALL ENTITY
☐ Patentee claims, or has previously claimed, small entity status. See 37 CFR 1.27.

LOSS OF ENTITLEMENT TO SMALL ENTITY STATUS
☐ Patentee is no longer entitled to small entity status. See 37 CFR 1.27(g)

NOT Small Entity		Small Entity	
Fee	Code	Fee	Code
○ 3 ½ year	(1551)	○ 3 ½ year	(2551)
◉ 7 ½ year	(1552)	○ 7 ½ year	(2552)
○ 11 ½ year	(1553)	○ 11 ½ year	(2553)

SURCHARGE
The surcharge required by 37 CFR 1.20(i)(2) (Fee Code 1558) must be paid as a condition of accepting unintentionally delayed payment of the maintenance fee.

MAINTENANCE FEE (37 CFR 1.20(e)-(g))
The appropriate maintenance fee must be submitted with this petition.

STATEMENT
THE UNDERSIGNED CERTIFIES THAT THE DELAY IN PAYMENT OF THE MAINTENANCE FEE TO THIS PATENT WAS UNINTENTIONAL

PETITIONER(S) REQUEST THAT THE DELAYED PAYMENT OF THE MAINTENANCE FEE BE ACCEPTED AND THE PATENT REINSTATED

THIS PORTION MUST BE COMPLETED BY THE SIGNATORY OR SIGNATORIES

37 CFR 1.378(d) states: "Any petition under this section must be signed by an attorney or agent registered to practice before the Patent and Trademark Office, or by the patentee, the assignee, or other party in interest."

I certify, in accordance with 37 CFR 1.4(d)(4) that I am

◉ An attorney or agent registered to practice before the Patent and Trademark Office

○ A sole patentee

○ A joint patentee; I certify that I am authorized to sign this submission on behalf of all the other patentees.

○ A joint patentee; all of whom are signing this e-petition

○ The assignee of record of the entire interest

Under the Paperwork Reduction Act of 1995, no persons are required to respond to a collection of information unless it displays valid OMB control number.

Patent Practitioner			
A signature of the applicant or representative is required in accordance with 37 CFR 1.33 and 10.18. Please see 37 CFR 1.4(d) for the form of the signature			
Signature	/Steven M. Rabin/	Date (YYYY-MM-DD)	2008-12-02
Name	Steven M. Rabin	Registration Number	29102

This collection of information is required by 37 CFR 1.378(c). The information is required to obtain or retain a benefit by the public which is to file (and by the USPTO to process) an application. Confidentiality is governed by 35 U.S.C. 122 and 37 CFR 1.11 and 1.14. This collection is estimated to take 1 hour to complete, including gathering, preparing, and submitting the completed application form to the USPTO. Time will vary depending upon the individual case. Any comments on the amount of time you require to complete this form and/ or suggestions for reducing this burden, should be sent to the Chief Information Officer, U.S. Patent and Trademark Office, U.S. Department of Commerce, P.O. Box 1450, Alexandria, VA 22313-1450. DO NOT SEND FEES OR COMPLETED FORMS TO THIS ADDRESS. **This form can only be used when in conjunction with EFS-Web. If this form is mailed to the USPTO, it may cause delays in reinstating the patent.**

Privacy Act Statement

The Privacy Act of 1974 (P.L. 93-579) requires that you be given certain information in connection with your submission of the attached form related to a patent application or patent. Accordingly, pursuant to the requirements of the Act, please be advised that: (1) the general authority for the collection of this information is 35 U.S.C. 2(b)(2); (2) furnishing of the information solicited is voluntary; and (3) the principal purpose for which the information is used by the U.S. Patent and Trademark Office is to process and/or examine your submission related to a patent application or patent. If you do not furnish the requested information, the U.S. Patent and Trademark Office may not be able to process and/or examine your submission, which may result in termination of proceedings or abandonment of the application or expiration of the patent.

The information provided by you in this form will be subject to the following routine uses:

1. The information on this form will be treated confidentially to the extent allowed under the Freedom of Information Act (5 U.S.C. 552) and the Privacy Act (5 U.S.C. 552a). Records from this system of records may be disclosed to the Department of Justice to determine whether the Freedom of Information Act requires disclosure of these record s.

2. A record from this system of records may be disclosed, as a routine use, in the course of presenting evidence to a court, magistrate, or administrative tribunal, including disclosures to opposing counsel in the course of settlement negotiations.

3. A record in this system of records may be disclosed, as a routine use, to a Member of Congress submitting a request involving an individual, to whom the record pertains, when the individual has requested assistance from the Member with respect to the subject matter of the record.

4. A record in this system of records may be disclosed, as a routine use, to a contractor of the Agency having need for the information in order to perform a contract. Recipients of information shall be required to comply with the requirements of the Privacy Act of 1974, as amended, pursuant to 5 U.S.C. 552a(m).

5. A record related to an International Application filed under the Patent Cooperation Treaty in this system of records may be disclosed, as a routine use, to the International Bureau of the World Intellectual Property Organization, pursuant to the Patent Cooperation Treaty.

6. A record in this system of records may be disclosed, as a routine use, to another federal agency for purposes of National Security review (35 U.S.C. 181) and for review pursuant to the Atomic Energy Act (42 U.S.C. 218(c)).

7. A record from this system of records may be disclosed, as a routine use, to the Administrator, General Services, or his/her designee, during an inspection of records conducted by GSA as part of that agency's responsibility to recommend improvements in records management practices and programs, under authority of 44 U.S.C. 2904 and 2906. Such disclosure shall be made in accordance with the GSA regulations governing inspection of records for this purpose, and any other relevant (i.e., GSA or Commerce) directive. Such disclosure shall not be used to make determinations about individuals.

8. A record from this system of records may be disclosed, as a routine use, to the public after either publication of the application pursuant to 35 U.S.C. 122(b) or issuance of a patent pursuant to 35 U.S.C. 151. Further, a record may be disclosed, subject to the limitations of 37 CFR 1.14, as a routine use, to the public if the record was filed in an application which became abandoned or in which the proceedings were terminated and which application is referenced by either a published application, an application open to public inspections or an issued patent.

9. A record from this system of records may be disclosed, as a routine use, to a Federal, State, or local law enforcement agency, if the USPTO becomes aware of a violation or potential violation of law or regulation.

#15
gdc
9/15/00

UNITED STATES PATENT AND TRADEMARK OFFICE
UNDER SECRETARY OF COMMERCE AND
COMMISSIONER OF PATENTS AND TRADEMARKS
Washington, D.C. 20231

SEP 12 2000

OBLON, SPIVAK, McCLELLAND,
MAIER & NEUSTADT, P.C.
Fourth Floor
1755 Jefferson Davis Highway
Arlington, Virginia 22202

In re Application of Ende Shan et al. :
Application No. 09/006,958 : DECISION ON PETITION
Filed: January 14, 1998 :
Attorney docket No. 7575-0057-77 :

This is a decision on petition pursuant to 37 CFR § 1.181 filed August 28, 2000, requesting withdrawal of restriction requirement made final in the Office action of May 10, 1999, Paper
No. 4..

The Petition is **granted** for the reason that the examiner failed to meet his burden of providing reasonable basis for his position that the process as claimed can be used to make another and materially different product. Indeed, the alleged "materially different product" of a thin film resistor clearly lies within the scope of the device as claimed at the time of restriction in the Office action dated February 3, 1999, Paper No. 2.

This application is now a Continued Prosecution Application under 37 CFR 1.53(d), and it will be forwarded to the examiner of record for his consideration immediately following the mailing of this decision.

Rolf G. Hille

Rolf G. Hille
Director
Technology Center 2800

SPE RESPONSE FOR CERTIFICATE OF CORRECTION

Paper No.: _____

DATE : August 29, 2005

TO SPE OF : ART UNIT 2612 (*Exr. is Ngoc-Yen Vu*)

SUBJECT : Request for Certificate of Correction on Patent No.: 6,882,362

A response is requested with respect to the accompanying request for a certificate of correction.

Please complete this form and return with file, within 7 days to:
Palm location 7580, Certificates of Correction Branch – South Tower – 9A22
If response is for an IFW, **return to employee (named below) via PUBSCofC Team in MADRAS.**
With respect to the change(s) requested, correcting Office and/or Applicant's errors, should the patent read as shown in the certificate of correction (COCIN)? No new matter should be introduced, nor should the scope or meaning of the claims be changed.

Please see IFW code COCIN and the Terminal Disclaimer!

Thank You For Your Assistance

sp STAM

Certificates of Correction Branch
Tel. No. 703-308-9390 x120

The request for issuing the above-identified correction(s) is hereby:
Note your decision on the appropriate box.

- ☑ **Approved** — **All** changes apply.
- ☐ **Approved in Part** — Specify below which changes **do not** apply.
- ☐ **Denied** — State the reasons for denial below.

Comments:

NGOC-YEN VU
PRIMARY EXAMINER

SPE — **Art Unit** 2612

SPE RESPONSE FOR CERTIFICATE OF CORRECTION

Paper No.: _____

DATE : August 29, 2005

TO SPE OF : ART UNIT 2612 (*Exr. is Ngoc-Yen Vu*)

SUBJECT : Request for Certificate of Correction on Patent No.: 6,882,362

A response is requested with respect to the accompanying request for a certificate of correction.

Please complete this form and return with file, within **7** days to:

Palm location 7580, Certificates of Correction Branch – South Tower – 9A22

If response is for an IFW, **return to employee (named below) via PUBSCofC Team in MADRAS.**

With respect to the change(s) requested, correcting Office and/or Applicant's errors, should the patent read as shown in the certificate of correction (COCIN)? No new matter should be introduced, nor should the scope or meaning of the claims be changed.

Please see IFW code COCIN and the Terminal Disclaimer!

Thank You For Your Assistance

sp

Certificates of Correction Branch

Tel. No. 703-308-9390 x120

The request for issuing the above-identified correction(s) is hereby:

Note your decision on the appropriate box.

- ☐ **Approved** — **All** changes apply.
- ☐ **Approved in Part** — Specify below which changes **do not** apply.
- ☐ **Denied** — State the reasons for denial below.

Comments:

_____

_____

_____

_____

_____

_____ **SPE** _____ **Art Unit**

O I P E JC79
AUG 19 2005
PATENT & TRADEMARK OFFICE

cofc

03500.008067.2 (35.C8067 CII/DI (DIV. I)) PATENT

IN THE UNITED STATES PATENT AND TRADEMARK OFFICE

In re Patent of:	Examiner: N. Vu
EIICHI SATO	Group Art Unit: 2612
Appln. No.: 09/007,102	Patent No.: 6,882,362 B2
Filed: January 14, 1998	Issued: April 19, 2005
For: IMAGE PROCESSING SYSTEM HAVING AN IMAGE SIGNAL GENERATING DEVICE COUPLEABLE TO AN ADAPTER	August 19, 2005

Certificate
AUG 24 2005
of Correction

Commissioner for Patents
P.O. Box 1450
Alexandria, VA 22313-1450

Attention: CERTIFICATE OF CORRECTION BRANCH

REQUEST FOR CERTIFICATE OF CORRECTION UNDER RULE 322

Sir:

It is respectfully requested that a Certificate of Correction be issued by the Patent and Trademark Office due to errors which appear in the printed patent as a result of Patent and Trademark Office mistakes. A Certificate of Correction form (Form PTO-1050), in duplicate, is enclosed.

Although no fees are believed to be necessary, any fees deemed necessitated by this paper may be charged to Deposit Account No. 06-1205. A duplicate copy of this paper is enclosed.

AUG 24 2005

Patentee's undersigned attorney may be reached in our Washington, D.C. office by telephone at (202) 530-1010. All correspondence should continue to be directed to our address given below.

Respectfully submitted,

Daniel S. Glueck
Attorney for Patentee
Registration No. 37,838

FITZPATRICK, CELLA, HARPER & SCINTO
30 Rockefeller Plaza
New York, New York 10112-3800
Facsimile: (212) 218-2200

DSG/llp

DC_MAIN 209564v1

AUG 2 4 2005

OIPE
AUG 19 2005
PATENT

03500.008067.2 (35.C8067 CII/DI (DIV. I)) PATENT

IN THE UNITED STATES PATENT AND TRADEMARK OFFICE

In re Patent of:	)	
	:	Examiner: N. Vu
EIICHI SATO	)	
	:	Group Art Unit: 2612
Appln. No.: 09/007,102	)	
	:	Patent No.: 6,882,362 B2
Filed: January 14, 1998	)	
	:	Issued: April 19, 2005
For: IMAGE PROCESSING SYSTEM HAVING AN IMAGE SIGNAL GENERATING DEVICE COUPLEABLE TO AN ADAPTER	) :) :	August 19, 2005

Commissioner for Patents
P.O. Box 1450
Alexandria, VA 22313-1450

Attention: CERTIFICATE OF CORRECTION BRANCH

REQUEST FOR CERTIFICATE OF CORRECTION UNDER RULE 322

Sir:

It is respectfully requested that a Certificate of Correction be issued by the Patent and Trademark Office due to errors which appear in the printed patent as a result of Patent and Trademark Office mistakes. A Certificate of Correction form (Form PTO-1050), in duplicate, is enclosed.

Although no fees are believed to be necessary, any fees deemed necessitated by this paper may be charged to Deposit Account No. 06-1205. A duplicate copy of this paper is enclosed.

AUG 24 2005

Patentee's undersigned attorney may be reached in our Washington, D.C. office by telephone at (202) 530-1010. All correspondence should continue to be directed to our address given below.

Respectfully submitted,

Daniel S. Glueck
Attorney for Patentee
Registration No. 37,838

FITZPATRICK, CELLA, HARPER & SCINTO
30 Rockefeller Plaza
New York, New York 10112-3800
Facsimile: (212) 218-2200

DSG/lp

DC_MAIN 209564v1

AUG 2 4 2005

Staple Here Only!

PRINTER'S TRIM LINE

UNITED STATES PATENT AND TRADEMARK OFFICE

CERTIFICATE OF CORRECTION

PATENT NO. : 6,882,362 B2

DATED : April 19, 2005

INVENTOR(S) : Eiichi Sato

It is certified that error appears in the above-identified patent and that said Letters Patent is hereby corrected as shown below:

ON THE TITLE PAGE

Insert --This patent is subject to a Terminal Disclaimer-- and insert the following paragraph:

> --This patent issued on a continued prosecution application filed under 37 CFR 1.53(d), and is subject to the twenty year patent term provisions of 35 U.S.C. 154(a)(2).--.

COLUMN 3

Line 23, "an D/A" should read --an A/D--.

Line 40, "represents-an D/A" should read --represents an A/D--.

COLUMN 6

Line 39, "case" should read --a case--.

MAILING ADDRESS OF SENDER:

FITZPATRICK, CELLA, HARPER & SCINTO
30 Rockefeller Plaza
New York, New York 10112-3800
(212) 218-2100 - Telephone
(212) 218-2200 - Facsimile

PATENT NO. 6,882,362 B2

No. of add'l. copies @ 30¢ per page

Form PTO 1050 (Rev. 3-82)
(Form#30) DSG/lp DC_MAIN 209566

AUG 2 4 2005

Staple Here Only!

PRINTER'S TRIM LINE

UNITED STATES PATENT AND TRADEMARK OFFICE

CERTIFICATE OF CORRECTION

PATENT NO. : 6,882,362 B2

DATED : April 19, 2005

INVENTOR(S) : Eiichi Sato

It is certified that error appears in the above-identified patent and that said Letters Patent is hereby corrected as shown below:

COLUMN 8

Line 63, "maybe" should read --may be--.

MAILING ADDRESS OF SENDER:

FITZPATRICK, CELLA, HARPER & SCINTO
30 Rockefeller Plaza
New York, New York 10112-3800
(212) 218-2100 - Telephone
(212) 218-2200 - Facsimile

PATENT NO. 6,882,362 B2

No. of add'l. copies @ 30¢ per page

Form PTO 1050 (Rev. 3-82)
(Form#30) DSG/llp DC_MAIN 209566

AUG 2 4 2005

Staple Here Only!

PRINTER'S TRIM LINE

UNITED STATES PATENT AND TRADEMARK OFFICE

CERTIFICATE OF CORRECTION

PATENT NO. : 6,882,362 B2

DATED : April 19, 2005

INVENTOR(S) : Eiichi Sato

It is certified that error appears in the above-identified patent and that said Letters Patent is hereby corrected as shown below:

ON THE TITLE PAGE

Insert --This patent is subject to a Terminal Disclaimer-- and insert the following paragraph:

> --This patent issued on a continued prosecution application filed under 37 CFR 1.53(d), and is subject to the twenty year patent term provisions of 35 U.S.C. 154(a)(2).--.

COLUMN 3

Line 23, "an D/A" should read --an A/D--.

Line 40, "represents-an D/A" should read --represents an A/D--.

COLUMN 6

Line 39, "case" should read --a case--.

MAILING ADDRESS OF SENDER:

FITZPATRICK, CELLA, HARPER & SCINTO
30 Rockefeller Plaza
New York, New York 10112-3800
(212) 218-2100 - Telephone
(212) 218-2200 - Facsimile

PATENT NO. 6,882,362 B2

No. of add'l. copies @ 30¢ per page

Form PTO 1050 (Rev. 3-82)
(Form#30) DSG/tlp DC_MAIN 209566

AUG 2 4 2005

Staple Here Only!

PRINTER'S TRIM LINE

UNITED STATES PATENT AND TRADEMARK OFFICE

CERTIFICATE OF CORRECTION

PATENT NO. : 6,882,362 B2

DATED : April 19, 2005

INVENTOR(S) : Eiichi Sato

It is certified that error appears in the above-identified patent and that said Letters Patent is hereby corrected as shown below:

COLUMN 8

Line 63, "maybe" should read --may be--.

MAILING ADDRESS OF SENDER:

FITZPATRICK, CELLA, HARPER & SCINTO
30 Rockefeller Plaza
New York, New York 10112-3800
(212) 218-2100 - Telephone
(212) 218-2200 - Facsimile

PATENT NO. 6,882,362 B2

No. of add'l. copies @ 30¢ per page

Form PTO 1050 (Rev. 3-82)
(Form#30) DSG/lp DC_MAIN 209566

AUG 2 4 2005

SPE RESPONSE FOR CERTIFICATE OF CORRECTION

Paper No.: _____

DATE : 01/14/09

TO SPE OF : ART UNIT 1621

SUBJECT : Request for Certificate of Correction for Appl. No.: 09007498 Patent No.: 6111121

Please respond to this request for a certificate of correction within 7 days.

FOR IFW FILES:

Please review the requested changes/corrections as shown in the **COCIN** document(s) in the IFW application image. No new matter should be introduced, nor should the scope or meaning of the claims be changed.

Please complete the response (see below) and forward the completed response to scanning using document code **COCX**.

FOR PAPER FILES:

Please review the requested changes/corrections as shown in the attached certificate of correction. Please complete this form (see below) and forward it with the file to:

Certificates of Correction Branch (CofC)
South Tower - 9A22
Palm Location 7580
You can fax the Directors/SPE response to 571-270-9990

_____
Certificates of Correction Branch
703-308-9390 ext. _____

Thank You For Your Assistance

The request for issuing the above-identified correction(s) is hereby:
Note your decision on the appropriate box.

☒ **Approved**	**All** changes apply.
☐ **Approved in Part**	Specify below which changes **do not** apply.
☐ **Denied**	State the reasons for denial below.

Comments: _____

/Daniel M. Sullivan/
Supervisory Patent
Examiner, Art Unit 1621

1621

UNITED STATES PATENT AND TRADEMARK OFFICE

COMMISSIONER FOR PATENTS
UNITED STATES PATENT AND TRADEMARK OFFICE
P.O. BOX 1450
ALEXANDRIA, VA 22313-1450
www.uspto.gov

MAILED

JUN 03 2004

Office of the Director
Group 3300

PHILLIP L KENNER
RENNER KENNER GREIVE BOBAK
TAYLOR & WEBER
1610 FIRST NATIONAL TOWER
AKRON OH 44308-1456

In re Application of
Willis J. Mullet et al.
Application No. 09/007,527
Filed: January 15, 1998
For: SCREW CONNECTION OF COMPONENTS TO SHEET MATERIAL AND METHOD OF EFFECTING CONNECTION

DECISION ON PETITION TO WITHDRAW THE HOLDING OF ABANDONMENT

This is in response to the Petition to Withdraw the Holding of Abandonment filed in the United States Patent and Trademark Office on March 2, 2004.

The petition is **GRANTED** in view of the following evidence of timely filing :

☐ Postcard receipt being dated_____.

☐ USPTO return facsimile receipt dated _____.

☐ Certificate of Mailing/Transmission signed on _____.
and supported by a statement under 37 C.F.R. 1.8(b)(3).

☐ Hand Delivery Receipt of the specific documents submitted dated _____.

☐ Certificate of Transmission of CPA under 37 C.F.R. 1.6 filed on _____.

☐ Express Mail Receipt under 37 C.F.R. 1.10 dated _____.

☒ Originally sent response filed August 11, 2003 has been found and matched with the application.

This application is being forwarded to the Supervisory Legal Instruments Examiner for entry of the response and then to the examiner for prompt action.

KJD/mjz: 6/1/04

KENNETH J. DORNER
SPECIAL PROGRAMS EXAMINER
TECHNOLOGY CENTER 3300

UNITED STATES PATENT AND TRADEMARK OFFICE

COMMISSIONER FOR PATENTS
UNITED STATES PATENT AND TRADEMARK OFFICE
P.O. BOX 1450
ALEXANDRIA, VA 22313-1450
www.uspto.gov

MAR -2 2004

Paper No. 26

In re Application of
Clinton O. Fruitman
Application No. 09/008,148
Filed: January 16, 1998
Attorney Docket No. 29131.0217

DECISION ON PETITION

This is a decision on the petition filed by facsimile transmission on January 13, 2004 by which petitioner requests withdrawal of the holding that this application stands abandoned for failure to pay the issue fee. The petition is considered pursuant to 37 CFR 1.181, and no fee is required.

The petition is dismissed.

Petitioner alleges that the issue fee was not paid because the Notice of Allowance mailed on June 30, 2003 was not received. However, petitioner has not made a showing pursuant to the Notice published at 1156 0G 53, as discussed in MPEP § 711.03(c), in order to establish nonreceipt of the Notice of Allowance. Although it appears from the record that it is possible that the Notice of Allowability may have been mailed separately from the Notice of Allowance, such is not the usual course, and petitioner is required to establish nonreceipt of the Notice of Allowance in accordance with the above mentioned Notice.

Petitioner may file a renewed petition, directed to the attention of the undersigned and without fee. The renewed petition should contain a showing that establishes nonreceipt of Office correspondence as set forth in the Notice published at 1156 OG 53, and as discussed in MPEP § 711.03(c). The renewed petition must be filed within two months of the date of this decision. See 37 CFR 1.181(f).

PETITION DISMISSED.

E. Rollins Cross, Director
Technology Center 3700

Snell and Wilmer
One Arizona Center.
400 East Van Buren
Phoenix, AZ 85004-2202

UNITED STATES PATENT AND TRADEMARK OFFICE

DEC -7 2005

Commissioner for Patents
United States Patent and Trademark Office
P.O. Box 1450
Alexandria, VA 22313-1450
www.uspto.go

SNELL 7 WILMER
ONE ARIZONA CENTER
400 EAST VAN BUREN
PHOENIX, AZ 85004-0001

Paper No. 28

In re Application of
FRUITMAN, CLINTON O.
Appl No.: 09/008,148
Filed: January 16, 1998
For: METHODS AND APPARATUS FOR THE CHEMICAL MECHANICAL PLANARIZATION OF ELECTRONIC DEVICES
Attorney Docket Number: 29131.0217

DECISION GRANTING PETITION
37 CFR 1.181

This application is before the Director of Technology Center 3700 for reconsideration of the Notice of Abandonment mailed November 13, 2003 for failure to timely pay the issue fee as required by Notice of Allowance and Issue Fees Due mailed May 20, 2003. A petition filed January 13, 2004 was dismissed on March 2, 2004. A renewed petition was filed March 19, 2004. The renewed petition is considered pursuant to 37 CFR 1.181 based on non-receipt of the office action. No fee is required for this petition.

The petition is granted.

In support of the request, petitioner has provided a showing of non-receipt of the Office action in accordance with MPEP 711.03(c)IA.

In view of the above, the Notice of Abandonment mailed November 13, 2004 is hereby vacated and the holding of abandonment is withdrawn. The application will be forwarded to the Technical Support Staff to return the application to an active status and to remail the Notice of Allowance and the Notice of Allowability. The statutory period that was originally set forth in the Office communication will be restarted to run from the mail date of the newly supplied office action.

Richard A. Bertsch

Richard A. Bertsch, Director
Technology Center 3700

UNITED STATES PATENT AND TRADEMARK OFFICE

Commissioner for Patents
United States Patent and Trademark Office
Washington, D.C. 20231
www.uspto.gov

Paper No. 14

CONNOLLY BOVE LODGE & HUTZ LLP
SUITE 800
1990 M STREET, NW
WASHINGTON, DC 20036-3425

COPY MAILED

OCT 2 2 2002

OFFICE OF PETITIONS

In re Application of
HIROYUKI INOUE
Application No. 09/008,497
Filed: January 16, 1998
Title: SEMICONDUCTOR DEVICE AND METHOD FOR MANUFACTURING THE SAME

DECISION ON PETITION

This is a decision on the petition filed on September 26, 2002, pursuant to 37 CFR 1.137(b), to revive the above-identified application.

The petition is **DISMISSED.**

Any request for reconsideration of this decision must be submitted within **TWO (2) MONTHS** from the mail date of this decision. Extensions of time under 37 CFR 1.136(a) are permitted. The reconsideration request should include a cover letter entitled "Renewed Petition under 37 CFR 1.137(b)."

The above-identified application was abandoned for failure to timely file a proper response to the final Office action mailed June 9, 2000. This action set a shortened statutory period for reply of three (3) months. No extensions of time under 37 CFR 1.136(a) were obtained. Accordingly, the above-identified application became abandoned on September 10, 2000. A Notice of Abandonment was mailed on January 25, 2001.

With the instant petition, petitioner filed a Notice of Appeal (and fee) in reply to the final Office action, paid the petition fee and provided a statement of unintentional delay by an assignee.

A grantable petition pursuant to 37 CFR 1.137(b) must be accompanied by:

(1) the reply required to the outstanding Office action or notice, unless previously filed;

(2) the petition fee as set forth in 37 CFR 1.17(m);

(3) a statement that the **entire** delay in filing the required reply from the due date for the reply until the filing of a grantable petition pursuant to 37 CFR 1.137(b) was unintentional. The Commissioner may require additional information where there is a question whether the delay was unintentional; and

(4) any terminal disclaimer (and fee as set forth in §1.20(d)) required pursuant to 37 CFR 1.137(d).

The instant petition does not satisfy requirement (3) above.

37 CFR 1.137(b)(3) requires a statement that "the entire delay in filing the required reply from the due date for the reply until the filing of a grantable petition pursuant to 37 CFR 1.137(b) was unintentional." The statement of unintentional delay must be made by a party or parties who had the right or authority to reply to avoid abandonment. See MPEP 711.03(c). Furthermore, the statement under 1.137(b)(3) must be made by a registered practitioner or other party in interest having firsthand knowledge of the facts and circumstances surrounding the delay. If such statement is made by a registered practitioner not having firsthand knowledge of the facts and circumstances surrounding the delay, the statement must be based upon a reasonable investigation of the facts and circumstances surrounding the abandonment of the application consistent with the 37 CFR 10.18, and such statement by any person must be consistent with the duty of candor and good faith and the duty to disclose material information to the Office as required under 37 CFR 1.56.

The instant petition includes such a statement. However, this statement is made by assignee United Microelectronics Corporation. This assignee acknowledges that the assignment was not executed until January 29, 2001, and thus, this assignee was not an assignee when the application became abandoned on September 10, 2000. Accordingly, Microelectronics Corporation cannot make a statement attesting to unintentional delay for the period from September 10, 2000 to January 29, 2001, a time when Microelectronics was not a party in interest and did not have the right or authority to reply to avoid abandonment.

A proper statement (or statements) of unintentional delay by a proper part(ies)is required.

The change of correspondence address filed September 26, 2002, is acknowledged and made of record.

Further correspondence with respect to this matter should be addressed as follows:

By mail: Commissioner for Patents
Box DAC
Washington, DC 20231

By FAX: (703) 308-6916
Attn: Office of Petitions

By hand: Office of Petitions
2201 South Clark Place
Crystal Plaza 4, Suite 3C23
Arlington, VA

Telephone inquiries concerning this decision should be directed to the undersigned at (703) 305-0309.

Nancy Johnson
Petitions Attorney
Office of Petitions
Office of the Deputy Commissioner
for Patent Examination Policy

UNITED STATES PATENT AND TRADEMARK OFFICE

Commissioner for Patents
United States Patent and Trademark Office
Washington, D.C. 20231
www.uspto.gov

Paper No. 16

CONNOLLY BOVE LODGE & HUTZ LLP
SUITE 800
1990 M STREET, NW
WASHINGTON, DC 20036-3425

COPY MAILED

NOV 1 5 2002

OFFICE OF PETITIONS

In re Application of
HIROYUKI INOUE
Application No. 09/008,497
Filed: January 16, 1998
Title: SEMICONDUCTOR DEVICE AND METHOD FOR MANUFACTURING THE SAME

DECISION ON PETITION

This is a decision on the "Renewed Petition to Revive an Unintentionally Abandoned Application under 37 CFR § 1.137(b)," filed November 7, 2002.

The petition is **GRANTED**.

The above-identified application was abandoned for failure to timely file a proper response to the final Office action mailed June 9, 2000. This action set a shortened statutory period for reply of three (3) months. No extensions of time under 37 CFR 1.136(a) were obtained. Accordingly, the above-identified application became abandoned on September 10, 2000. A Notice of Abandonment was mailed on January 25, 2001.

On initial petition, petitioner filed the required reply in the form of a Notice of Appeal (and fee), paid the petition fee and provided a statement of unintentional delay by an assignee. However, the statement was determined to be insufficient to satisfy § 1.137(b)(3). The statement provided was made by the current assignee. A statement of unintentional delay from the former assignee or other party who had the right or authority to reply to avoid abandonment was required (Decision mailed October 22, 2002).

On instant renewed petition, petitioner provided a statement of unintentional delay made by the prior assignee as to the period in which they could have replied to avoid abandonment or could have filed a petition to revive. The statement of the current assignee filed on initial petition covered the remaining period to the filing of the instant grantable petition. Petitioner has, thereby, now met all requirements for revival under § 1.137(b).

Please be advised that the two-month period for filing an appeal brief in triplicate (accompanied by the fee required by 37 C.F.R. § 1.17(c)), runs from the mail date of this decision.

The application file is being returned to Technology Center 2814 for processing of the Notice of Appeal.

Telephone inquiries related to this decision should be directed to Petitions Attorney Nancy Johnson at (703) 305-0309.

Nancy Johnson
Petitions Attorney
Office of Petitions
Office of the Deputy Commissioner
for Patent Examination Policy

UNITED STATES PATENT AND TRADEMARK OFFICE

COMMISSIONER FOR PATENTS
UNITED STATES PATENT AND TRADEMARK OFFICE
WASHINGTON, D.C. 20231
www.uspto.gov

Paper No. 9

COPY MAILED

JUL 30 2001

OFFICE OF PETITIONS
A/C PATENTS

DAVID T. MILLERS
SKJERVEN, MORRILL, MACPERSON,
FRANKLIN & FRIEL, LLP
25 METRO DRIVE, SUITE 700
SAN JOSE, CA 95110

In re Application of Park et al Application No. 09/008,525 Filed: January 16, 1998 Attorney Docket No. AB 778 US	: : : : :	DECISION GRANTING PETITION DECISION VACATING NOTICE OF ABANDONMENT

This is a decision on the petition entitled, " Request for Withdrawal of Holding of Abandonment, filed April 26, 1999. The petition was recently forwarded to the Office of Petitions for consideration. The Office sincerely apologizes for any inconvenience occasioned by the delay in addressing the petition. The petition will be treated as a petition under 37 CFR 1.181 to withdraw the holding of abandonment.

The petition is **granted**.

The Office contended that this application became abandoned for failure to reply timely to Notice to File Missing Parts, mailed April 15, 1998. The Office alleged that no extensions of time were obtained pursuant to 37 CFR 1.136(a) and that this application became abandoned on June 15, 1998. A Notice of Abandonment was mailed March 26, 1999.

Petitioner asserts that the application never went abandoned because a reply to the April 15, 1998 Notice to File Missing Parts was hand delivered to the Office on June 29, 1998 -- well within the extendable period for response. To bolster petitioner's case, petitioner has provided, *inter alia*, a copy of a petition for a one month extension of time, a copy of an authorization to charge petitioner's deposit account for the surcharge for filing a late declaration and for a one month extension of time, a copy of an executed declaration, and an itemized postcard receipt showing the filing was received in the Office of Initial Patent Examination on June 29, 1998. In addition, the Office has recovered the actual June 29, 1998 filing that shows an OIPE date stamp affixed thereto. Therefore, the Notice of Abandonment was mailed in error and is hereby vacated.

Pursuant to petitioner's authorization, Deposit Account No. 19-0124 will be charged $110.00 for the one month extension of time and $130.00 for filing a late declaration.

The Office acknowledges receipt of an Associate Power of Attorney and a Change of Attorney Docket Number, both filed January 29, 1999.

The application file will be forwarded to the Office of Initial Patent Examination for further processing.

Telephone inquiries concerning this matter may be directed to the undersigned at (703) 308-6712.

E. Shirene Willis

E. Shirene Willis
Petitions Attorney
Office of Petitions
Office of the Deputy Commissioner
for Patent Examination Policy

UNITED STATES PATENT AND TRADEMARK OFFICE

COMMISSIONER FOR PATENTS
UNITED STATES PATENT AND TRADEMARK OFFICE
WASHINGTON, D.C. 20231
www.uspto.gov

Jde 12/30/02

Paper No. 16

Norman R. Klivans
SKJERVEN MORRILL LLP
25 METRO DRIVE
SUITE 700
SAN JOSE CA 95110

DEC 31 2002

In re Application of:	:	
Jung, Chul *et al.*	:	
Application No. 09/008,525	:	DECISION ON REQUEST TO WITHDRAW FROM RECORD
Filed: January 16, 1998	:	
For: **SEMICONDUCTOR MEMORY DEVICE AND METHOD OF MANUFACTURING FOR PREVENTING BIT LINE OXIDATION**	:	

This is a decision on the request to withdraw as attorney of record under 37 C.F.R. § 1.36, filed November 27, 2002.

A grantable request to withdraw as attorney of record must be signed by every attorney seeking to withdraw or contain a clear indication that one attorney is signing on behalf of others. A request to withdraw will not be approved unless at least thirty (30) days would remain between the date of approval and the later of the expiration date of a time to file a response or the expiration date of the maximum time period that can be extended under 37 C.F.R. § 1.136(a).

The request meets all the above requirements. The request was signed by Norman R. Klivans on behalf of all the attorneys of record in the above identified application.

The request is APPROVED.

The application currently has no attorney of record.

All future communications from the Office will be directed to Mr. John Castellano, at the below-listed address until otherwise notified by applicant.

Inquiries related to this decision should be directed to Lissi Mojica Marquis at (703) 308-2260.

Lissi Mojica Marquis, Special Programs Examiner
Technology Center 2800
Semiconductors, Electrical and Optical
Systems and Components

cc: Mr. John Castellano
Harness, Dickey & Pierce
12355 Sunrise Valley Drive, Suite 350
Reston, VA 20191

UNITED STATES PATENT AND TRADEMARK OFFICE

COMMISSIONER FOR PATENTS
UNITED STATES PATENT AND TRADEMARK OFFICE
P.O. BOX 1450
ALEXANDRIA, VA 22313-1450
www.uspto.gov

JOHN S MORTIMER
WOOD PHILLIPS VANSANTEN CLARK & MORTIMER
500 WEST MADISON STREET
SUITE 3800
CHICAGO IL 60661

COPY MAILED

MAR 1 0 2004

OFFICE OF PETITIONS

In re Application of	:
Nagata et al.	:
Application No. 09/008,675	: Decision on
Filed: January 16, 1998	: Petition to Correct
For: METHOD AND SYSTEM FOR TREATING A POWER TRANSMISSION BELT/BELT SLEEVE	: Patent Term Extension

In response to the "Petition Under 37 CFR 1.181" to correct the patent term extension in the Notice of Allowance, which was filed on February 9, 2004, the above-identified application has been forwarded to the undersigned for review of the extension information to be printed on the face of the patent. See 35 U.S.C. § 154(b)[1] and 37 C.F.R. § 1.701. The Notice of Allowance and Issue Fee Due incorrectly indicated that the patent to issue from the application 09/008,675 is eligible for a 0 day extension, where a 661 day extension is due.

The petition is GRANTED.

Issue of the above-identified application was delayed due to proceedings before the Board of Appeals and Interferences, and the above-identified application has been allowed pursuant to a favorable decision by the Board.

A Notice of Appeal was filed in the above-identified application on April 21, 2000. On November 7, 2002, the Board of Appeals and Interferences affirmed-in-part the decision of the examiner in the above-identified application. Since the above-identified application was filed after June 7, 1995, there is no terminal disclaimer due to the issue of another patent claiming subject matter that is not patentably distinct from that under appellate review, and issuance of the application as a patent was delayed due to appellate review resulting in a reversal of an adverse decision of patentability, the patent to issue from the application is entitled to an extension of the patent term. The period of delay in the above-identified application is the period beginning on April 21, 2000, the date that the Notice of Appeal was filed, and ending on November 7, 2002, the date of the final decision in favor of the applicant. Three years after the earliest effective filing date of the application is January 16, 2001. Accordingly, the period of extension is required to be reduced pursuant to 37 CFR 1.701(d)(1). As a result, the period of extension is correctly indicated as 661 days, the period from January 16, 2001 to November 7, 2002 including the beginning and end dates.

---

[1] 35 U.S.C. § 154 was amended by the "American Inventors Protection Act of 1999," which was enacted on November 29, 1999 as part of Public Law 106-113 (Consolidated Appropriations Act for Fiscal Year 2000). Since this amendment is effective May 29, 2000 and applies to applications filed on or after that date, the existing patent term adjustment provisions of 35 U.S.C. § 154 continue to apply to the above-identified application.

After mailing of this decision, the above-identified application will be returned to Office of Publications for further processing. The patent, if issued, will include an indication that the patent term is extended by **661 days.**

Petitioner's deposit account has not been charged a petition fee.

Telephone inquiries with regard to this communication should be directed to Mark Polutta at (703) 308-8122.

Mark Polutta
Legal Advisor
Office of Patent Legal Administration
Office of the Deputy Commissioner
for Patent Examination Policy

PTO/SB/66 (03-09)
Approved for use through 03/31/2012. OMB 0651-0016
U.S. Patent and Trademark Office: U.S. DEPARTMENT OF COMMERCE
Under the Paperwork Reduction Act of 1995, no persons are required to respond to a collection of information unless it displays valid OMB control number.

PETITION TO ACCEPT UNINTENTIONALLY DELAYED PAYMENT OF MAINTENANCE FEE IN AN EXPIRED PATENT (37 CFR 1.378(c))

Patent Number	Issue Date (YYYY-MM-DD)	Application Number	Filing Date (YYYY-MM-DD)	Docket Number (if applicable)
6,136,189	2000-10-24	09/008,845	1998-01-20	1086.0015

CAUTION: Maintenance fee (and surcharge, if any) payment must correctly identify: (1) the patent number and (2) the application number of the actual U.S. application leading to issuance of that patent to ensure the fee(s) is/are associated with the correct patent. 37 CFR 1.366(c) and (d).

SMALL ENTITY
☐ Patentee claims, or has previously claimed, small entity status. See 37 CFR 1.27.

LOSS OF ENTITLEMENT TO SMALL ENTITY STATUS
☒ Patentee is no longer entitled to small entity status. See 37 CFR 1.27(g)

NOT Small Entity		Small Entity	
Fee	Code	Fee	Code
○ 3 ½ year	(1551)	○ 3 ½ year	(2551)
◉ 7 ½ year	(1552)	○ 7 ½ year	(2552)
○ 11 ½ year	(1553)	○ 11 ½ year	(2553)

SURCHARGE
The surcharge required by 37 CFR 1.20(i)(2) (Fee Code 1558) must be paid as a condition of accepting unintentionally delayed payment of the maintenance fee.

MAINTENANCE FEE (37 CFR 1.20(e)-(g))
The appropriate maintenance fee must be submitted with this petition.

STATEMENT
THE UNDERSIGNED CERTIFIES THAT THE DELAY IN PAYMENT OF THE MAINTENANCE FEE TO THIS PATENT WAS UNINTENTIONAL

PETITIONER(S) REQUEST THAT THE DELAYED PAYMENT OF THE MAINTENANCE FEE BE ACCEPTED AND THE PATENT REINSTATED

THIS PORTION MUST BE COMPLETED BY THE SIGNATORY OR SIGNATORIES

37 CFR 1.378(d) states: "Any petition under this section must be signed by an attorney or agent registered to practice before the Patent and Trademark Office, or by the patentee, the assignee, or other party in interest."

I certify, in accordance with 37 CFR 1.4(d)(4) that I am

◉ An attorney or agent registered to practice before the Patent and Trademark Office

○ A sole patentee

○ A joint patentee; I certify that I am authorized to sign this submission on behalf of all the other patentees.

○ A joint patentee; all of whom are signing this e-petition

○ The assignee of record of the entire interest

Patent Practitioner			
A signature of the applicant or representative is required in accordance with 37 CFR 1.33 and 10.18. Please see 37 CFR 1.4(d) for the form of the signature			
Signature	/Kelly J. Kubasta/	Date (YYYY-MM-DD)	2010-01-15
Name	Kelly J. Kubasta	Registration Number	44196

This collection of information is required by 37 CFR 1.378(c). The information is required to obtain or retain a benefit by the public which is to file (and by the USPTO to process) an application. Confidentiality is governed by 35 U.S.C. 122 and 37 CFR 1.11 and 1.14. This collection is estimated to take 1 hour to complete, including gathering, preparing, and submitting the completed application form to the USPTO. Time will vary depending upon the individual case. Any comments on the amount of time you require to complete this form and/ or suggestions for reducing this burden, should be sent to the Chief Information Officer, U.S. Patent and Trademark Office, U.S. Department of Commerce, P.O. Box 1450, Alexandria, VA 22313-1450. DO NOT SEND FEES OR COMPLETED FORMS TO THIS ADDRESS. **This form can only be used when in conjunction with EFS-Web. If this form is mailed to the USPTO, it may cause delays in reinstating the patent.**

Privacy Act Statement

The Privacy Act of 1974 (P.L. 93-579) requires that you be given certain information in connection with your submission of the attached form related to a patent application or patent. Accordingly, pursuant to the requirements of the Act, please be advised that: (1) the general authority for the collection of this information is 35 U.S.C. 2(b)(2); (2) furnishing of the information solicited is voluntary; and (3) the principal purpose for which the information is used by the U.S. Patent and Trademark Office is to process and/or examine your submission related to a patent application or patent. If you do not furnish the requested information, the U.S. Patent and Trademark Office may not be able to process and/or examine your submission, which may result in termination of proceedings or abandonment of the application or expiration of the patent.

The information provided by you in this form will be subject to the following routine uses:

1. The information on this form will be treated confidentially to the extent allowed under the Freedom of Information Act (5 U.S.C. 552) and the Privacy Act (5 U.S.C. 552a). Records from this system of records may be disclosed to the Department of Justice to determine whether the Freedom of Information Act requires disclosure of these records.

2. A record from this system of records may be disclosed, as a routine use, in the course of presenting evidence to a court, magistrate, or administrative tribunal, including disclosures to opposing counsel in the course of settlement negotiations.

3. A record in this system of records may be disclosed, as a routine use, to a Member of Congress submitting a request involving an individual, to whom the record pertains, when the individual has requested assistance from the Member with respect to the subject matter of the record.

4. A record in this system of records may be disclosed, as a routine use, to a contractor of the Agency having need for the information in order to perform a contract. Recipients of information shall be required to comply with the requirements of the Privacy Act of 1974, as amended, pursuant to 5 U.S.C. 552a(m).

5. A record related to an International Application filed under the Patent Cooperation Treaty in this system of records may be disclosed, as a routine use, to the International Bureau of the World Intellectual Property Organization, pursuant to the Patent Cooperation Treaty.

6. A record in this system of records may be disclosed, as a routine use, to another federal agency for purposes of National Security review (35 U.S.C. 181) and for review pursuant to the Atomic Energy Act (42 U.S.C. 218(c)).

7. A record from this system of records may be disclosed, as a routine use, to the Administrator, General Services, or his/her designee, during an inspection of records conducted by GSA as part of that agency's responsibility to recommend improvements in records management practices and programs, under authority of 44 U.S.C. 2904 and 2906. Such disclosure shall be made in accordance with the GSA regulations governing inspection of records for this purpose, and any other relevant (i.e., GSA or Commerce) directive. Such disclosure shall not be used to make determinations about individuals.

8. A record from this system of records may be disclosed, as a routine use, to the public after either publication of the application pursuant to 35 U.S.C. 122(b) or issuance of a patent pursuant to 35 U.S.C. 151. Further, a record may be disclosed, subject to the limitations of 37 CFR 1.14, as a routine use, to the public if the record was filed in an application which became abandoned or in which the proceedings were terminated and which application is referenced by either a published application, an application open to public inspections or an issued patent.

9. A record from this system of records may be disclosed, as a routine use, to a Federal, State, or local law enforcement agency, if the USPTO becomes aware of a violation or potential violation of law or regulation.

UNITED STATES PATENT AND TRADEMARK OFFICE

Commissioner for Patents
United States Patent and Trademark Office
P.O. Box 1450
Alexandria, VA 22313-1450
www.uspto.gov

In re Patent No. 6136189
Issue Date: October 24,2000
Application No. 09008845
Filed: January 20,1998
Attorney Docket No. 13-53 (AMK)

:
:DECISION GRANTING PETITION
:UNDER 37 CFR 1.378(c)
:

This is a decision on the electronic petition, filed January 15,2010 ,under 37 CFR 1.378(c) to accept the unintentionally delayed payment of the 7.5 year maintenance fee for the above-identified patent.

The petition is **GRANTED**.

The maintenance fee is accepted, and the above-identified patent reinstated as of January 15,2010 . This decision also constitutes notice that the fee has been accepted. An electronic copy of the petition and this decision has been created as an entry in the Image File Wrapper. Nevertheless, petitioner should print and retain an independent copy.

Telephone inquiries related to this electronic decision should be directed to the Electronic Business Center at 1-866-217-9197.

UNITED STATES PATENT AND TRADEMARK OFFICE

COMMISSIONER FOR PATENTS
UNITED STATES PATENT AND TRADEMARK OFFICE
WASHINGTON, D.C. 20231
www.uspto.gov

Paper No. 29

SAM PASTERNACK
CHOATE, HALL & STEWART
EXCHANGE PLACE
53 STATE STREET
BOSTON, MA 02109

COPY MAILED

MAY 16 2001

OFFICE OF PETITIONS
A/C PATENTS

In re Application of	:	
Linda Giffith, et al.	:	
Application No. 09/008,945	:	ON PETITION
Filed: January 20, 1998	:	
Attorney Docket No. 0492611-0315 (MIT 6196)	:	

This is a decision on the petition under 37 CFR 1.182, filed March 6, 2001, to effect the name change of the first named inventor.

The petition is granted.

PTO records have been corrected as follows:

> The name of the first named inventor has been changed from "Linda Griffith-Cima" to "Linda G. Griffith"

A corrected filing receipt is enclosed.

This application is being returned to Technology Center 1600.

Sherry D. Brinkley
Petitions Examiner
Office of Petitions
Office of the Deputy Commissioner
for Patent Examination Policy

PTO/SB/66 (03-09)
Approved for use through 03/31/2012. OMB 0651-0016
U.S. Patent and Trademark Office: U.S. DEPARTMENT OF COMMERCE
Under the Paperwork Reduction Act of 1995, no persons are required to respond to a collection of information unless it displays valid OMB control number.

PETITION TO ACCEPT UNINTENTIONALLY DELAYED PAYMENT OF MAINTENANCE FEE IN AN EXPIRED PATENT (37 CFR 1.378(c))

Patent Number	Issue Date (YYYY-MM-DD)	Application Number	Filing Date (YYYY-MM-DD)	Docket Number (if applicable)
5992702	1999-11-30	09/009,060	1998-01-20	

CAUTION: Maintenance fee (and surcharge, if any) payment must correctly identify: (1) the patent number and (2) the application number of the actual U.S. application leading to issuance of that patent to ensure the fee(s) is/are associated with the correct patent. 37 CFR 1.366(c) and (d).

SMALL ENTITY
☒ Patentee claims, or has previously claimed, small entity status. See 37 CFR 1.27.

LOSS OF ENTITLEMENT TO SMALL ENTITY STATUS
☐ Patentee is no longer entitled to small entity status. See 37 CFR 1.27(g)

NOT Small Entity			Small Entity		
	Fee	Code		Fee	Code
○	3 ½ year	(1551)	○	3 ½ year	(2551)
○	7 ½ year	(1552)	◉	7 ½ year	(2552)
○	11 ½ year	(1553)	○	11 ½ year	(2553)

SURCHARGE
The surcharge required by 37 CFR 1.20(i)(2) (Fee Code 1558) must be paid as a condition of accepting unintentionally delayed payment of the maintenance fee.

MAINTENANCE FEE (37 CFR 1.20(e)-(g))
The appropriate maintenance fee must be submitted with this petition.

STATEMENT
THE UNDERSIGNED CERTIFIES THAT THE DELAY IN PAYMENT OF THE MAINTENANCE FEE TO THIS PATENT WAS UNINTENTIONAL

PETITIONER(S) REQUEST THAT THE DELAYED PAYMENT OF THE MAINTENANCE FEE BE ACCEPTED AND THE PATENT REINSTATED

THIS PORTION MUST BE COMPLETED BY THE SIGNATORY OR SIGNATORIES

37 CFR 1.378(d) states: "Any petition under this section must be signed by an attorney or agent registered to practice before the Patent and Trademark Office, or by the patentee, the assignee, or other party in interest."

I certify, in accordance with 37 CFR 1.4(d)(4) that I am

○ An attorney or agent registered to practice before the Patent and Trademark Office

◉ A sole patentee

○ A joint patentee; I certify that I am authorized to sign this submission on behalf of all the other patentees.

○ A joint patentee; all of whom are signing this e-petition

○ The assignee of record of the entire interest

Sole Patentee			
A signature of the applicant or representative is required in accordance with 37 CFR 1.33 and 10.18. Please see 37 CFR 1.4(d) for the form of the signature.			
Signature	/Howard Shapiro/	Date (YYYY-MM-DD)	2009-10-20
Name	Howard Shapiro		

This collection of information is required by 37 CFR 1.378(c). The information is required to obtain or retain a benefit by the public which is to file (and by the USPTO to process) an application. Confidentiality is governed by 35 U.S.C. 122 and 37 CFR 1.11 and 1.14. This collection is estimated to take 1 hour to complete, including gathering, preparing, and submitting the completed application form to the USPTO. Time will vary depending upon the individual case. Any comments on the amount of time you require to complete this form and/ or suggestions for reducing this burden, should be sent to the Chief Information Officer, U.S. Patent and Trademark Office, U.S. Department of Commerce, P.O. Box 1450, Alexandria, VA 22313-1450. DO NOT SEND FEES OR COMPLETED FORMS TO THIS ADDRESS. **This form can only be used when in conjunction with EFS-Web. If this form is mailed to the USPTO, it may cause delays in reinstating the patent.**

Privacy Act Statement

The Privacy Act of 1974 (P.L. 93-579) requires that you be given certain information in connection with your submission of the attached form related to a patent application or patent. Accordingly, pursuant to the requirements of the Act, please be advised that: (1) the general authority for the collection of this information is 35 U.S.C. 2(b)(2); (2) furnishing of the information solicited is voluntary; and (3) the principal purpose for which the information is used by the U.S. Patent and Trademark Office is to process and/or examine your submission related to a patent application or patent. If you do not furnish the requested information, the U.S. Patent and Trademark Office may not be able to process and/or examine your submission, which may result in termination of proceedings or abandonment of the application or expiration of the patent.

The information provided by you in this form will be subject to the following routine uses:

1. The information on this form will be treated confidentially to the extent allowed under the Freedom of Information Act (5 U.S.C. 552) and the Privacy Act (5 U.S.C. 552a). Records from this system of records may be disclosed to the Department of Justice to determine whether the Freedom of Information Act requires disclosure of these records.

2. A record from this system of records may be disclosed, as a routine use, in the course of presenting evidence to a court, magistrate, or administrative tribunal, including disclosures to opposing counsel in the course of settlement negotiations.

3. A record in this system of records may be disclosed, as a routine use, to a Member of Congress submitting a request involving an individual, to whom the record pertains, when the individual has requested assistance from the Member with respect to the subject matter of the record.

4. A record in this system of records may be disclosed, as a routine use, to a contractor of the Agency having need for the information in order to perform a contract. Recipients of information shall be required to comply with the requirements of the Privacy Act of 1974, as amended, pursuant to 5 U.S.C. 552a(m).

5. A record related to an International Application filed under the Patent Cooperation Treaty in this system of records may be disclosed, as a routine use, to the International Bureau of the World Intellectual Property Organization, pursuant to the Patent Cooperation Treaty.

6. A record in this system of records may be disclosed, as a routine use, to another federal agency for purposes of National Security review (35 U.S.C. 181) and for review pursuant to the Atomic Energy Act (42 U.S.C. 218(c)).

7. A record from this system of records may be disclosed, as a routine use, to the Administrator, General Services, or his/her designee, during an inspection of records conducted by GSA as part of that agency's responsibility to recommend improvements in records management practices and programs, under authority of 44 U.S.C. 2904 and 2906. Such disclosure shall be made in accordance with the GSA regulations governing inspection of records for this purpose, and any other relevant (i.e., GSA or Commerce) directive. Such disclosure shall not be used to make determinations about individuals.

8. A record from this system of records may be disclosed, as a routine use, to the public after either publication of the application pursuant to 35 U.S.C. 122(b) or issuance of a patent pursuant to 35 U.S.C. 151. Further, a record may be disclosed, subject to the limitations of 37 CFR 1.14, as a routine use, to the public if the record was filed in an application which became abandoned or in which the proceedings were terminated and which application is referenced by either a published application, an application open to public inspections or an issued patent.

9. A record from this system of records may be disclosed, as a routine use, to a Federal, State, or local law enforcement agency, if the USPTO becomes aware of a violation or potential violation of law or regulation.

UNITED STATES PATENT AND TRADEMARK OFFICE

Commissioner for Patents
United States Patent and Trademark Office
P.O. Box 1450
Alexandria, VA 22313-1450
www.uspto.gov

In re Patent No. 5992702
Issue Date: November 30,1999
Application No. 09009060
Filed: January 20,1998
Attorney Docket No. 083514/0101/

:
:DECISION GRANTING PETITION
:UNDER 37 CFR 1.378(c)
:

This is a decision on the electronic petition, filed October 20,2009 ,under 37 CFR 1.378(c) to accept the unintentionally delayed payment of the 7.5 year maintenance fee for the above-identified patent.

The petition is **GRANTED**.

The maintenance fee is accepted, and the above-identified patent reinstated as of October 20,2009 . This decision also constitutes notice that the fee has been accepted. An electronic copy of the petition and this decision has been created as an entry in the Image File Wrapper. Nevertheless, petitioner should print and retain an independent copy.

Telephone inquiries related to this electronic decision should be directed to the Electronic Business Center at 1-866-217-9197.

UNITED STATES PATENT AND TRADEMARK OFFICE

COMMISSIONER FOR PATENTS
UNITED STATES PATENT AND TRADEMARK OFFICE
WASHINGTON, D.C. 20231
www.uspto.gov

Paper No. 18

Sonnenschein, Nath and Rosenthal
P.O. Box 0661080
Wacker Drive Station
Chicago, IL 60606-1080

COPY MAILED

JUN 2 8 2001

SPECIAL PROGRAMS OFFICE
DAC FOR PATENTS

In re Application of	:	
Kenji Osawa	:	
Application No. 09/009/248	:	ON PETITION
Filed: January 20, 1998	:	
Attorney Docket No. 9792909-3755	:	

This is a decision on the petition under 37 CFR 1.137(b), filed May 18, 2001, to revive the above-identified application.

The petition is **GRANTED**.

The above-identified application is being revived solely for purposes of continuity with a continued prosecution application (CPA) filed on May 18, 2001.

Pursuant to 37 CFR 1.136, an extension of time must be filed prior to the expiration of the maximum period obtainable for reply to avoid abandonment. Accordingly, since the $890 extension of time submitted with the petition was subsequent to the maximum period obtainable for reply, this fee is unnecessary and will be credited to petitioner's deposit account. Telephone inquiries concerning this decision should be directed to the undersigned at (703) 305-9282.

The application file is being forwarded to Technology Center 2800 for further processing.

Marianne E. Morgan
Petitions Examiner
Office of Petitions
Office of the Deputy Commissioner
for Patent Examination Policy

UNITED STATES PATENT AND TRADEMARK OFFICE

Commissioner for Patents
United States Patent and Trademark Office
Washington, D.C. 20231
www.uspto.gov

Paper No. 28

SONNENSCHEIN NATH & ROSENTHAL
P.O. BOX 061080
WACKER DRIVE STATION
CHICAGO IL 60606-1080

COPY MAILED

MAY 1 4 2002

OFFICE OF PETITIONS

In re Application of
Kenji Osawa and Haruhiko Makino
Application No. 09/009,248
Filed: January 20, 1998
Attorney Docket No. P972636
Title: LEAD FRAME AND SEMICONDUCTOR DEVICE HAVING THE SAME

DECISION ON PETITION

This is a decision on the petition filed on January 7, 2002, pursuant to 37 C.F.R. §1.137(b)[1], to revive the above-identified application.

The petition is **DISMISSED AS MOOT**.

After reviewing the prosecution history, several errors have been detected.

The above-identified application became abandoned for failure to reply within the meaning of 37 CFR 1.113 in a timely manner to the final Office action mailed November 17, 2000, which set a shortened statutory period for reply of three (3) months. No extensions of time under the provisions of 37 CFR 1.136(a) were obtained. Accordingly, the above-identified application became abandoned on February 18, 2000.

On May 18, 2001, a petition pursuant to 37 C.F.R. §1.137(b) was filed, along with a Request for Continued Prosecution Application (CPA) which was intended to serve as the reply. This CPA was mistakenly treated as a Request for Continued Examination (RCE), and consequently a Notice of Improper RCE was mailed on July 6, 2001, as no submission accompanied the request. The time period for response continued to run from the final rejection. As no response was received, a notice of abandonment was mailed on August 10, 2001.

---

1 A grantable petition pursuant to 37 CFR 1.137(b) must be accompanied by:

(1) The reply required to the outstanding Office action or notice, unless previously filed;
(2) The petition fee as set forth in § 1.17(m);
(3) A statement that the entire delay in filing the required reply from the due date for the reply until the filing of a grantable petition pursuant to this paragraph was unintentional. The Commissioner may require additional information where there is a question whether the delay was unintentional, and;
(4) Any terminal disclaimer (and fee as set forth in § 1.20(d)) required pursuant to paragraph (d) of this section.

The Examiner, unaware that a Notice of improper RCE and a notice of abandonment had been sent to the applicant, resumed prosecution of the CPA, and issued a fist-action final rejection on November 23, 2001. A response was received on December 31, 2001, and an advisory action was mailed on January 10, 2002.

On January 7, 2002, petitioner filed the instant petition, along with an RCE and a response.

In view of the fact that the CPA filed on May 18, 2001 should not have been treated as an RCE, the Notice of Improper RCE mailed July 6, 2001 was improper, and is hereby **VACATED**.

Similarly, the notice of abandonment, mailed August 10, 2001, was also improper, and is hereby **VACATED**.

As such, this petition is unnecessary and is **DISMISSED AS MOOT**. As it was brought about by an error on the part of the Office, the petition fee will be refunded to petitioner's Deposit Account.

The RCE filed with the instant petition has been entered, and the response filed concurrently is an acceptable submission.

The application file is being forwarded to Technology Center 2800 for processing of both the RCE and the accompanying submission.

Telephone inquiries concerning this decision should be directed to Petitions Attorney Paul Shanoski at (703) 305-0011.

Paul Shanoski
Petitions Attorney
Office of Petitions
Office of the Deputy Commissioner
for Patent Examination Policy

UNITED STATES PATENT AND TRADEMARK OFFICE

Commissioner for Patents
United States Patent and Trademark Office
P.O. Box 1450
Alexandria, VA 22313-1450
www.uspto.gov

In re Patent No. 6163725
Issue Date: December 19,2000
Application No. 09009574
Filed: January 20,1998
Attorney Docket No. NUC2003-1

:
:DECISION GRANTING PETITION
:UNDER 37 CFR 1.378(c)
:

This is a decision on the electronic petition, filed November 15,2006 ,under 37 CFR 1.378(c) to accept the unintentionally delayed payment of the 3.5 year maintenance fee for the above-identified patent.

The petition is GRANTED.

The maintenance fee is accepted, and the above-identified patent reinstated as of November 15,2006. This decision also constitutes notice that the fee has been accepted. An electronic copy of the petition and this decision has been created as an entry in an Image File Wrapper. Nevertheless, petitioner should print and retain an independent copy

Telephone inquires related to this electronic decision should be directed to the Electronic Business Center at 1-866-217-9197.

Under the Paperwork Reduction Act of 1995, no persons are required to respond to a collection of information unless it displays valid OMB control number.

PETITION TO ACCEPT UNINTENTIONALLY DELAYED PAYMENT OF MAINTENANCE FEE IN AN EXPIRED PATENT (37 CFR 1.378(c))

Patent Number	Issue Date (YYYY-MM-DD)	Application Number	Filing Date (YYYY-MM-DD)	Docket Number (if applicable)
6163725	2000-12-19	09009574	1998-01-20	CASEP0413USC

CAUTION: Maintenance fee (and surcharge, if any) payment must correctly identify: (1) the patent number and (2) the application number of the actual U.S. application leading to issuance of that patent to ensure the fee(s) is/are associated with the correct patent. 37 CFR 1.366(c) and (d).

SMALL ENTITY
☒ Patentee claims, or has previously claimed, small entity status. See 37 CFR 1.27.

LOSS OF ENTITLEMENT TO SMALL ENTITY STATUS
☐ Patentee is no longer entitled to small entity status. See 37 CFR 1.27(g)

NOT Small Entity		Small Entity	
Fee	Code	Fee	Code
○ 3 ½ year	(1551)	◉ 3 ½ year	(2551)
○ 7 ½ year	(1552)	○ 7 ½ year	(2552)
○ 11 ½ year	(1553)	○ 11 ½ year	(2553)

SURCHARGE
The surcharge required by 37 CFR 1.20(i)(2) (Fee Code 1558) must be paid as a condition of accepting unintentionally delayed payment of the maintenance fee.

MAINTENANCE FEE (37 CFR 1.20(e)-(g))
The appropriate maintenance fee must be submitted with this petition.

STATEMENT
THE UNDERSIGNED CERTIFIES THAT THE DELAY IN PAYMENT OF THE MAINTENANCE FEE TO THIS PATENT WAS UNINTENTIONAL

PETITIONER(S) REQUEST THAT THE DELAYED PAYMENT OF THE MAINTENANCE FEE BE ACCEPTED AND THE PATENT REINSTATED

THIS PORTION MUST BE COMPLETED BY THE SIGNATORY OR SIGNATORIES

37 CFR 1.378(d) states: "Any petition under this section must be signed by an attorney or agent registered to practice before the Patent and Trademark Office, or by the patentee, the assignee, or other party in interest."

I certify, in accordance with 37 CFR 1.4(d)(4) that I am

◉ An attorney or agent registered to practice before the Patent and Trademark Office

○ A sole patentee

○ A joint patentee; I certify that I am authorized to sign this submission on behalf of all the other patentees.

○ A joint patentee; all of whom are signing this e-petition

○ The assignee of record of the entire interest

Patent Practitioner			
A signature of the applicant or representative is required in accordance with 37 CFR 1.33 and 10.18. Please see 37 CFR 1.4(d) for the form of the signature			
Signature	/Christopher B. Jacobs.../	Date (YYYY-MM-DD)	2006-11-15
Name	Christopher B. Jacobs	Registration Number	37853

This collection of information is required by 37 CFR 1.378(c). The information is required to obtain or retain a benefit by the public which is to file (and by the USPTO to process) an application. Confidentiality is governed by 35 U.S.C. 122 and 37 CFR 1.11 and 1.14. This collection is estimated to take 1 hour to complete, including gathering, preparing, and submitting the completed application form to the USPTO. Time will vary depending upon the individual case. Any comments on the amount of time you require to complete this form and/ or suggestions for reducing this burden, should be sent to the Chief Information Officer, U.S. Patent and Trademark Office, U.S. Department of Commerce, P.O. Box 1450, Alexandria, VA 22313-1450. DO NOT SEND FEES OR COMPLETED FORMS TO THIS ADDRESS. **This form can only be used when in conjunction with EFS-Web. If this form is mailed to the USPTO, it may cause delays in reinstating the patent.**

Privacy Act Statement

The Privacy Act of 1974 (P.L. 93-579) requires that you be given certain information in connection with your submission of the attached form related to a patent application or patent. Accordingly, pursuant to the requirements of the Act, please be advised that: (1) the general authority for the collection of this information is 35 U.S.C. 2(b)(2); (2) furnishing of the information solicited is voluntary; and (3) the principal purpose for which the information is used by the U.S. Patent and Trademark Office is to process and/or examine your submission related to a patent application or patent. If you do not furnish the requested information, the U.S. Patent and Trademark Office may not be able to process and/or examine your submission, which may result in termination of proceedings or abandonment of the application or expiration of the patent.

The information provided by you in this form will be subject to the following routine uses:

1. The information on this form will be treated confidentially to the extent allowed under the Freedom of Information Act (5 U.S.C. 552) and the Privacy Act (5 U.S.C. 552a). Records from this system of records may be disclosed to the Department of Justice to determine whether the Freedom of Information Act requires disclosure of these record s.

2. A record from this system of records may be disclosed, as a routine use, in the course of presenting evidence to a court, magistrate, or administrative tribunal, including disclosures to opposing counsel in the course of settlement negotiations.

3. A record in this system of records may be disclosed, as a routine use, to a Member of Congress submitting a request involving an individual, to whom the record pertains, when the individual has requested assistance from the Member with respect to the subject matter of the record.

4. A record in this system of records may be disclosed, as a routine use, to a contractor of the Agency having need for the information in order to perform a contract. Recipients of information shall be required to comply with the requirements of the Privacy Act of 1974, as amended, pursuant to 5 U.S.C. 552a(m).

5. A record related to an International Application filed under the Patent Cooperation Treaty in this system of records may be disclosed, as a routine use, to the International Bureau of the World Intellectual Property Organization, pursuant to the Patent Cooperation Treaty.

6. A record in this system of records may be disclosed, as a routine use, to another federal agency for purposes of National Security review (35 U.S.C. 181) and for review pursuant to the Atomic Energy Act (42 U.S.C. 218(c)).

7. A record from this system of records may be disclosed, as a routine use, to the Administrator, General Services, or his/her designee, during an inspection of records conducted by GSA as part of that agency's responsibility to recommend improvements in records management practices and programs, under authority of 44 U.S.C. 2904 and 2906. Such disclosure shall be made in accordance with the GSA regulations governing inspection of records for this purpose, and any other relevant (i.e., GSA or Commerce) directive. Such disclosure shall not be used to make determinations about individuals.

8. A record from this system of records may be disclosed, as a routine use, to the public after either publication of the application pursuant to 35 U.S.C. 122(b) or issuance of a patent pursuant to 35 U.S.C. 151. Further, a record may be disclosed, subject to the limitations of 37 CFR 1.14, as a routine use, to the public if the record was filed in an application which became abandoned or in which the proceedings were terminated and which application is referenced by either a published application, an application open to public inspections or an issued patent.

9. A record from this system of records may be disclosed, as a routine use, to a Federal, State, or local law enforcement agency, if the USPTO becomes aware of a violation or potential violation of law or regulation.

UNITED STATES PATENT AND TRADEMARK OFFICE

Commissioner for Patents
United States Patent and Trademark Office
Washington, D.C. 20231
www.uspto.gov
DIW 08-00

Paper No. 27

COPY MAILED

AUG 21 2000

SPECIAL PROGRAMS OFFICE
DAC FOR PATENTS

PENNIE & EDMONDS
1155 AVENUE OF THE AMERICAS
NEW YORK, NY 10036-2711

In re Application of
Zambias et al.
Application No. 09/009,846
Filed: 20 January, 1998
Attorney Docket No. 5925-061-999

: DECISION ACCORDING STATUS
: UNDER 37 CFR 1.47(a)

This is in response to the petition under 37 CFR 1.47(a)[1] filed on 20 April, 2000.

The petition is **GRANTED**.

In accordance with 37 CFR 1.63(d), petitioner has submitted a copy of the executed oath or declaration filed in Application No. 08/375,838, filed on 10 January, 1995, of which the instant filing is a continuation application. Furthermore, petitioner has submitted a copy of the decision, mailed on 20 September, 1995, granting a petition to accord § 1.47 status to the prior application.

The above-identified application and papers have been reviewed and found in compliance with 37 CFR 1.47(a). This application is hereby accorded Rule 1.47(a) status.

As provided in Rule 1.47(a), this Office will forward notice of this application's filing to the non-signing inventor at the address given in the petition, not the Declaration. Notice of the filing of this application will also be published in the Official Gazette.

---

[1] A grantable petition under 37 CFR 1.47(a) requires:
(1) proof that the non-signing inventor cannot be reached or refuses to sign the oath or declaration after having been presented with the application papers (specification, claims and drawings);
(2) an acceptable oath or declaration in compliance with 35 U.S.C. §§ 115 and 116;
(3) the petition fee; and
(4) a statement of the last known address of the non-signing inventor.

After this decision is mailed, the application will be forwarded to Technology Center 1600 for further processing.

Telephone inquiries related to this decision should be directed to Petitions Attorney Douglas I. Wood at 703-308-6918.

Beverly M. Flanagan
Supervisory Petitions Examiner
Office of Petitions
Office of the Deputy Commissioner
for Patent Examination Policy

SPE RESPONSE FOR CERTIFICATE OF CORRECTION

Paper No.: _____

DATE : 2/7/2004

TO SPE OF : ART UNIT Spec Padmashri Ponnaluri 1639

SUBJECT : Request for Certificate of Correction for Appl. No.: 09/009846 Patent No.: 6785557

Please respond to this request for a certificate of correction within 7 days.

Please review the requested changes/corrections as shown in the COCIN document(s) in the IFW application image. No new matter should be introduced, nor should the scope or meaning of the claims be changed.

Please complete the response (see below) and forward the completed response to scanning using document code COCX.

HENRY RANDALL
Certificates of Correction Branch
703-308-9390 ext.

Thank You For Your Assistance

The request for issuing the above-identified correction(s) is hereby:
Note your decision on the appropriate box.

- ☐ **Approved** — **All** changes apply.
- ☐ **Approved in Part** — Specify below which changes **do not** apply.
- ☐ Denied — State the reasons for denial below.

Comments: _____

_____

_____

_____

_____

_____ SPE

_____ Art Unit

PTO/SB/44 (04-05)
Approved for use through 04/30/2007. OMB 0651-0033
U.S. Patent and Trademark Office; U.S. DEPARTMENT OF COMMERCE
Under the Paperwork Reduction Act of 1995, no persons are required to respond to a collection of information unless it displays a valid OMB control number.
(Also Form PTO-1050)

UNITED STATES PATENT AND TRADEMARK OFFICE

CERTIFICATE OF CORRECTION

PATENT NO : 6,878,557

APPLICATION NO. : 09/009,846

ISSUE DATE : April 12, 2005

INVENTOR(S) : Robert ZAMBIAS *et al.*

It is certified that an error appears or errors appear in the above-identified patent and that said Letters Patent is hereby corrected as shown below:

At Col. 130, lines 38-40, replace claim 3 with claim 3 as follows:

3. The method of claim 2, further including, after step a) or step b), the step of formatting the contents of the reaction vessels into a spatially-addressable array.

At Col. 130, lines 41-42, replace claim 4 with claim 4 as follows:

4. The method of claim 1 or 2, wherein each compound in the array is unique.

MAILING ADDRESS OF SENDER (Please do not use customer number below):

Arnold & Porter LLP
Attn: IP Docketing
555 Twelfth Street, N.W.
Washington, D.C. 20004-1206

This collection of information is required by 37 CFR 1.322, 1.323, and 1.324. The information is required to obtain or retain a benefit by the public which is to file (and by the USPTO to process) an application. Confidentiality is governed by 35 U.S.C. 122 and 37 CFR 1.14. This collection is estimated to take 1.0 hour to complete, including gathering, preparing, and submitting the completed application form to the USPTO. Time will vary depending upon the individual case. Any comments on the amount of time you require to complete this form and/or suggestions for reducing this burden, should be sent to the Chief Information Officer, U.S. Patent and Trademark Office, U.S. Department of Commerce, P.O. Box 1450, Alexandria, VA 22313-1450. DO NOT SEND FEES OR COMPLETED FORMS TO THIS ADDRESS. SEND TO: **Attention Certificate of Corrections Branch, Commissioner for Patents, P.O. Box 1450, Alexandria, VA 22313-1450.**

If you need assistance in completing the form, call 1-800 PTO-9199 and select option 2.

UNITED STATES PATENT AND TRADEMARK OFFICE

Commissioner for Patents
United States Patent and Trademark Office
P.O. Box 1450
Alexandria, VA 22313-1450
www.uspto.gov

ANTONELLI, TERRY, STOUT & KRAUS, LLP
1300 North Seventeenth Street
Suite 1800
Arlington, VA 22209

MAILED

JUL 21 2005

Technology Center 2100

In re Application of:
David Lee GARRISON, et al.
Application No.: 09/010,193
Filed: January 21, 1998
For: DUAL SOURCE REMITTANCE PROCESSING

DECISION ON REQUEST TO WITHDRAW AS ATTORNEY OR AGENT

This is a decision on the Request to Withdraw from Representation filed June 24, 2005.

A grantable request to withdraw as attorney of record should indicate thereon the present mailing addresses of the attorney(s) who is/are withdrawing from the record and of the applicant. The request for withdrawal must be signed by every attorney seeking to withdraw or contain a clear indication that one attorney is signing on behalf of another/others. A request to withdraw will not be approved unless at least 30 (thirty) days would remain between the date of approval and the later of the expiration date of a time to file a response or the expiration date of the maximum time period which can be extended under 37 C.F.R. § 1.136(a). The effective date of withdrawal being the date of decision and not the date of request. See M.P.E.P. § 402.06. 37 C.F.R. § 1.36 further requires that the applicant or patent owner be notified of the withdrawal of the attorney or agent.

The request is **GRANTED**.

All future communications from the Office will be directed to the below-listed address until otherwise notified by applicant. This correspondence address is provided by the withdrawn attorney(s). Applicant is reminded of the obligation to promptly notify the Patent and Trademark Office (Office) of any change in correspondence address to ensure receipt of all communications from the Office.

For Vincent N. Trans
Special Program Examiner
Technology Center 2100
Computer Architecture, Software, and
Information Security
571-272-3613

cc: Mr. Hans Dreyer
Director, Intellectual Property (Legal Department)
CheckFree Corporation
6000 Perimeter Drive
Dublin, OH 43017-3233

UNITED STATES PATENT AND TRADEMARK OFFICE

Commissioner for Patents
United States Patent and Trademark Office
P.O. Box 1450
Alexandria, VA 22313-1450
www.uspto.gov

COPY MAILED

FEB 27 2007

OFFICE OF PETITIONS

SUTHERLAND ASBILL & BRENNAN
999 PEACHTREE STREET, N.E.
ATLANTA GA 30309

In re Application of	:	
David Lee Garrison et al	:	
Application No. 09/010,193	:	ON PETITION
Filed: January 21, 1998	:	
Attorney Docket No. 23952-0046	:	

This is a decision on the petition, filed October 10, 2006, under 37 CFR 1.181(a) to Withdraw Holding of Abandonment.

The petition under 37 CFR 1.181(a) is **GRANTED**.

The application was held abandoned for failure to timely reply to the Notification of Non-Compliant Appeal Brief mailed November 29, 2005.

The petition states that a reply was timely submitted on December 9, 2005. To support this assertion, the petitioner has submitted a copy of the response, along with a copy of a postcard receipt stamp date of December 9, 2005 by the USPTO .

In view of the above, the holding of abandonment is hereby withdrawn and the application restored to pending status.

Telephone inquiries concerning this decision should be directed to the undersigned at (571) 272-3208.

This matter is being referred to Technology Center AU 2164.

Karen Creasy

Karen Creasy
Petitions Examiner
Office of Petitions

Under the Paperwork Reduction Act of 1995, no persons are required to respond to a collection of information unless it displays valid OMB control number.

PETITION TO ACCEPT UNINTENTIONALLY DELAYED PAYMENT OF MAINTENANCE FEE IN AN EXPIRED PATENT (37 CFR 1.378(c))

Patent Number	Issue Date (YYYY-MM-DD)	Application Number	Filing Date (YYYY-MM-DD)	Docket Number (if applicable)
5957226	1999-09-28	09010306	1998-01-21	4476-19

CAUTION: Maintenance fee (and surcharge, if any) payment must correctly identify: (1) the patent number and (2) the application number of the actual U.S. application leading to issuance of that patent to ensure the fee(s) is/are associated with the correct patent. 37 CFR 1.366(c) and (d).

SMALL ENTITY
☒ Patentee claims, or has previously claimed, small entity status. See 37 CFR 1.27.

LOSS OF ENTITLEMENT TO SMALL ENTITY STATUS
☐ Patentee is no longer entitled to small entity status. See 37 CFR 1.27(g)

NOT Small Entity			Small Entity		
	Fee	Code		Fee	Code
○	3 ½ year	(1551)	○	3 ½ year	(2551)
○	7 ½ year	(1552)	◉	7 ½ year	(2552)
○	11 ½ year	(1553)	○	11 ½ year	(2553)

SURCHARGE
The surcharge required by 37 CFR 1.20(i)(2) (Fee Code 1558) must be paid as a condition of accepting unintentionally delayed payment of the maintenance fee.

MAINTENANCE FEE (37 CFR 1.20(e)-(g))
The appropriate maintenance fee must be submitted with this petition.

STATEMENT
THE UNDERSIGNED CERTIFIES THAT THE DELAY IN PAYMENT OF THE MAINTENANCE FEE TO THIS PATENT WAS UNINTENTIONAL

PETITIONER(S) REQUEST THAT THE DELAYED PAYMENT OF THE MAINTENANCE FEE BE ACCEPTED AND THE PATENT REINSTATED

THIS PORTION MUST BE COMPLETED BY THE SIGNATORY OR SIGNATORIES

37 CFR 1.378(d) states: "Any petition under this section must be signed by an attorney or agent registered to practice before the Patent and Trademark Office, or by the patentee, the assignee, or other party in interest."

I certify, in accordance with 37 CFR 1.4(d)(4) that I am

◉ An attorney or agent registered to practice before the Patent and Trademark Office

○ A sole patentee

○ A joint patentee; I certify that I am authorized to sign this submission on behalf of all the other patentees.

○ A joint patentee; all of whom are signing this e-petition

○ The assignee of record of the entire interest

Patent Practitioner			
A signature of the applicant or representative is required in accordance with 37 CFR 1.33 and 10.18. Please see 37 CFR 1.4(d) for the form of the signature			
Signature	/alexander c. johnson, jr./	Date (YYYY-MM-DD)	2008-09-30
Name	Alexander C. Johnson, Jr.	Registration Number	29396

This collection of information is required by 37 CFR 1.378(c). The information is required to obtain or retain a benefit by the public which is to file (and by the USPTO to process) an application. Confidentiality is governed by 35 U.S.C. 122 and 37 CFR 1.11 and 1.14. This collection is estimated to take 1 hour to complete, including gathering, preparing, and submitting the completed application form to the USPTO. Time will vary depending upon the individual case. Any comments on the amount of time you require to complete this form and/ or suggestions for reducing this burden, should be sent to the Chief Information Officer, U.S. Patent and Trademark Office, U.S. Department of Commerce, P.O. Box 1450, Alexandria, VA 22313-1450. DO NOT SEND FEES OR COMPLETED FORMS TO THIS ADDRESS. **This form can only be used when in conjunction with EFS-Web. If this form is mailed to the USPTO, it may cause delays in reinstating the patent.**

Privacy Act Statement

The Privacy Act of 1974 (P.L. 93-579) requires that you be given certain information in connection with your submission of the attached form related to a patent application or patent. Accordingly, pursuant to the requirements of the Act, please be advised that: (1) the general authority for the collection of this information is 35 U.S.C. 2(b)(2); (2) furnishing of the information solicited is voluntary; and (3) the principal purpose for which the information is used by the U.S. Patent and Trademark Office is to process and/or examine your submission related to a patent application or patent. If you do not furnish the requested information, the U.S. Patent and Trademark Office may not be able to process and/or examine your submission, which may result in termination of proceedings or abandonment of the application or expiration of the patent.

The information provided by you in this form will be subject to the following routine uses:

1. The information on this form will be treated confidentially to the extent allowed under the Freedom of Information Act (5 U.S.C. 552) and the Privacy Act (5 U.S.C. 552a). Records from this system of records may be disclosed to the Department of Justice to determine whether the Freedom of Information Act requires disclosure of these record s.

2. A record from this system of records may be disclosed, as a routine use, in the course of presenting evidence to a court, magistrate, or administrative tribunal, including disclosures to opposing counsel in the course of settlement negotiations.

3. A record in this system of records may be disclosed, as a routine use, to a Member of Congress submitting a request involving an individual, to whom the record pertains, when the individual has requested assistance from the Member with respect to the subject matter of the record.

4. A record in this system of records may be disclosed, as a routine use, to a contractor of the Agency having need for the information in order to perform a contract. Recipients of information shall be required to comply with the requirements of the Privacy Act of 1974, as amended, pursuant to 5 U.S.C. 552a(m).

5. A record related to an International Application filed under the Patent Cooperation Treaty in this system of records may be disclosed, as a routine use, to the International Bureau of the World Intellectual Property Organization, pursuant to the Patent Cooperation Treaty.

6. A record in this system of records may be disclosed, as a routine use, to another federal agency for purposes of National Security review (35 U.S.C. 181) and for review pursuant to the Atomic Energy Act (42 U.S.C. 218(c)).

7. A record from this system of records may be disclosed, as a routine use, to the Administrator, General Services, or his/her designee, during an inspection of records conducted by GSA as part of that agency's responsibility to recommend improvements in records management practices and programs, under authority of 44 U.S.C. 2904 and 2906. Such disclosure shall be made in accordance with the GSA regulations governing inspection of records for this purpose, and any other relevant (i.e., GSA or Commerce) directive. Such disclosure shall not be used to make determinations about individuals.

8. A record from this system of records may be disclosed, as a routine use, to the public after either publication of the application pursuant to 35 U.S.C. 122(b) or issuance of a patent pursuant to 35 U.S.C. 151. Further, a record may be disclosed, subject to the limitations of 37 CFR 1.14, as a routine use, to the public if the record was filed in an application which became abandoned or in which the proceedings were terminated and which application is referenced by either a published application, an application open to public inspections or an issued patent.

9. A record from this system of records may be disclosed, as a routine use, to a Federal, State, or local law enforcement agency, if the USPTO becomes aware of a violation or potential violation of law or regulation.

UNITED STATES PATENT AND TRADEMARK OFFICE

Commissioner for Patents
United States Patent and Trademark Office
P.O. Box 1450
Alexandria, VA 22313-1450
www.uspto.gov

In re Patent No. 5957226
Issue Date: September 28,1999
Application No. 09010306
Filed: January 21,1998
Attorney Docket No. 4776-19

:
:DECISION GRANTING PETITION
:UNDER 37 CFR 1.378(c)
:

This is a decision on the electronic petition, filed September 30,2008 ,under 37 CFR 1.378(c) to accept the unintentionally delayed payment of the 7.5 year maintenance fee for the above-identified patent.

The petition is **GRANTED**.

The maintenance fee is accepted, and the above-identified patent reinstated as of September 30,2008 . This decision also constitutes notice that the fee has been accepted. An electronic copy of the petition and this decision has been created as an entry in the Image File Wrapper. Nevertheless, petitioner should print and retain an independent copy.

Telephone inquiries related to this electronic decision should be directed to the Electronic Business Center at 1-866-217-9197.

SPE RESPONSE FOR CERTIFICATE OF CORRECTION

Paper No.:20050809

DATE : August 9, 2005

TO SPE OF : ART UNIT 3729

SUBJECT : Request for Certificate of Correction on Patent No.: 6,789,310

A response is requested with respect to the accompanying request for a certificate of correction.

Please complete this form and return with file, within **7** days to:
Certificates of Correction Branch - PK 3-910
Palm location **7590** - Tel. No. 305-8201

With respect to the change(s) requested, correcting Office and/or Applicant's errors, should the patent read as shown in the certificate of correction? No new matter should be introduced, nor should the scope or meaning of the claims be changed.

Thank You For Your Assistance **Certificates of Correction Branch**

The request for issuing the above-identified correction(s) is hereby:
Note your decision on the appropriate box.

☒ **Approved** **All** changes apply.

☐ **Approved in Part** Specify below which changes **do not** apply.

☐ **Denied** State the reasons for denial below.

Comments:

Yes. Claims should be read as set forth the Certificate of Correction.

Mary Jimenez for

SPE: David Bryant **Art Unit** 3729

09/010490

COFC

OIPE JC26
JUN 2 9 2005
PATENT & TRADEMARK OFFICE

IN THE UNITED STATES PATENT AND TRADEMARK OFFICE

In re patent of	:	**MAIL STOP: CERTIFICATE OF CORRECTION BRANCH**
Kanji HATA et al.	:	
Patent No. 6,789,310	:	**Confirmation No. 8750**
Issued September 14, 2004	:	Atty Docket 00177/527415

COMPONENT MOUNTING APPARATUS AND METHOD, AND COMPONENT MOUNTING EQUIPMENT

Certificate
JUL 0 1 2005
of Correction

APPROVED 8/8/05 PK

SECOND REQUEST FOR CERTIFICATE OF CORRECTION UNDER 37 CFR 1.322

Commissioner for Patents
P.O. Box 1450
Alexandria, VA 22313-1450

Sir:

A timely filed Amendment After Final was filed in U.S. Application Serial No. 09/010,490 (the application corresponding to the above-identified patent) on November 21, 2003, which amended and canceled claims that were rejected in the Office Action mailed August 21, 2003. Subsequent to the filing of this Amendment, Examiner Kim contacted Applicants' undersigned representative and stated that no response to aforementioned Office Action was received, and accordingly, the November 21 Amendment was re-submitted on December 22, 2003. This re-submission was received by Examiner Kim, but the Amendment was not entered for raising new issues as indicated in the Advisory Action mailed January 30, 2004. Thus, an RCE was filed on February 19, 2004, so as to have the Amendment entered. The application was then allowed; however, the printed patent included the claims that were rejected in the August 21 Office Action and not the claims of the aforementioned Amendment.

Accordingly, in accordance with the provisions of 37 CFR 1.322, it is respectfully requested that a Certificate of Correction issue to replace the claims of the patent with the following claims, which correspond to claims 8-11, 18-28, 30, 32 and 34 of the aforementioned Amendment, except for being re-numbered as 1, 2, 4, 3, 9, 5, 6, 10, 7, 11, 13-17, 8, 12 and 18, respectively.

JUL 0 6 2005

1. A component mounting apparatus comprising:

first and second component supply tables for accommodating a plurality of components, said first and second component supply tables being arranged on both sides of a board transfer path;

a first rotary member having first nozzles, wherein said first rotary member is rotatable such that upon rotation of said first rotary member said first nozzles simultaneously rotate for successively picking up first components at said first component supply table by suction, thereafter said first rotary member can be moved to a board positioned at a board mounting position, and the picked-up first components can be successively mounted onto the board while said first rotary member is moved in first and second directions which are perpendicular to each other, with the first direction being perpendicular to the board transfer path, and the second direction being located along the board transfer path; and

a second rotary member having second nozzles, wherein said second rotary member is rotatable such that upon rotation of said second rotary member said second nozzles simultaneously rotate for successively picking up second components at said second component supply table by suction, thereafter said second rotary member can move to the board positioned at the board mounting position, and the picked-up second components can be successively mounted onto the board while said second rotary member moves in third and fourth directions which are perpendicular to each other, with the third direction being parallel to the first direction, and the fourth direction being parallel to the second direction but not necessarily the same as the second direction,

wherein each of said first and second rotary members is independently moveable between a respective one of said first and second component supply tables and the board when the board is at the board mounting position, and said first rotary member is capable of mounting picked-up components onto the board while said second rotary member successively sucks to pick up components at said second component supply table.

2. The component mounting apparatus as claimed in claim 1, wherein the first, second, third and fourth directions are each in a plane that is parallel to the board transfer path.

JUL 0 6 2005

3. The component mounting apparatus as claimed in claim 2, further comprising a controller for mutually controlling said first and second rotary members in accordance with a timing at which, when said first rotary member carries out a component picking-up operation for picking-up components from said first component supply table, said second rotary member carries out a component mounting operation for mounting picked-up components onto the board when the board is at the board mounting position.

4. The component mounting apparatus as claimed in claim 1, further comprising a controller for mutually controlling said first and second rotary members in accordance with a timing at which, when said first rotary member carries out a component picking-up operation for picking-up components from said first component supply table, said second rotary member carries out a component mounting operation for mounting picked-up components onto the board when the board is at the board mounting position.

5. The component mounting apparatus according to claim 1, further comprising a board positioning section for positioning the board at the board mounting position such that the board is not moved during mounting of components thereon via said first and second rotary members.

6. The component mounting apparatus according to claim 1, wherein said first and second component supply tables are to accommodate different kinds of components.

7. The component mounting apparatus according to claim 1, wherein at least one of said first and second component supply tables is capable of continuously supplying components.

8. The component mounting apparatus as claimed in claim 1, wherein said first rotary member is rotatable about a horizontal axis, and said first nozzles are mounted on said first rotary member so that each of said first nozzles can be selectively and sequentially directed downwardly to suck a component from said first component supply table and mount the sucked component onto the board when the board is at the board mounting position.

JUL 0 6 2005

9. A component mounting apparatus comprising:

first and second component supply tables for accommodating a plurality of components, said first and second component supply tables being arranged on opposite sides of a board mounting position, wherein a board transfer path along which a board is transferred extends between said first and second component supply tables;

a first rotary member having first nozzles, wherein said first rotary member is rotatable such that upon rotation of said first rotary member said first nozzles simultaneously rotate for successively picking up first components at said first component supply table and thereafter successively mounting the plural picked-up first components onto a board, positioned at the board mounting position, while moving in first and second directions which are perpendicular to each other, with the first direction being perpendicular to the board transfer path, and the second direction being located along the board transfer path; and

a second rotary member having second nozzles, wherein said second rotary member is rotatable such that upon rotation of said second rotary member said second nozzles simultaneously rotate for successively picking up second components at said second component supply table and thereafter successively mounting the picked-up second components onto the board, positioned at the board mounting position, while moving in third and fourth directions which are perpendicular to each other, with the third direction being parallel to the first direction, and the fourth direction being parallel to the second direction but not necessarily the same as the second direction,

wherein each of said first and second rotary members is independently movable between a respective one of said first and second component supply tables and the board when the board is at the board mounting position, and

wherein said first rotary member is capable of mounting picked-up components onto the board, at the board mounting position, while said second rotary member successively picks up components, via said second nozzles, at said second component supply table.

10. The component mounting apparatus according to claim 9, wherein said first and second component supply tables are to accommodate different kinds of components.

JUL 0 6 2005

11. The component mounting apparatus according to claim 9, wherein at least one of said first and second component supply tables is capable of continuously supplying components.

12. The component mounting apparatus as claimed in claim 9, wherein said first rotary member is rotatable about a horizontal axis, and said first nozzles are mounted on said first rotary member so that each of said first nozzles can be selectively and sequentially directed downwardly to suck a component from said first component supply table and mount the sucked component onto the board when the board is at the board mounting position.

13. A component mounting apparatus comprising:

first and second component supply tables for accommodating a plurality of components, said component supply tables being arranged on both sides of a board transfer path;

a first rotary member having first nozzles, wherein said first rotary member is rotatable such that upon rotation of said first rotary member said first nozzles simultaneously rotate for successively picking up first components at said first component supply table and thereafter successively mounting the picked-up first components onto a board that is positioned at a board mounting position, said first rotary member being movable in first and second directions which are perpendicular to each other, with the first direction being perpendicular to the board transfer path, and the second direction being along the board transfer path; and

a second rotary member having second nozzles, wherein said second rotary member is rotatable such that upon rotation of said second rotary member said second nozzles simultaneously rotate for successively picking up second components at said second component supply table and thereafter successively mounting the picked-up second components onto the board, positioned at the board mounting position, while said second rotary member moves in third and fourth directions which are perpendicular to each other, with the third direction being perpendicular to the board transfer path, and the fourth direction being along the board transfer path,

wherein each of said first and second rotary members is independently movable between a respective one of said first and second component supply tables and the board when the board is at the board mounting position, and

JUL 0 6 2005

wherein said first rotary member is capable of mounting picked-up first components onto the board, at the board mounting position, while said second rotary member successively picks up components at said second component supply table.

14. The component mounting apparatus according to claim 13, further comprising a board positioning section for positioning the board at the board mounting position such that the board is not moved during mounting of components thereon by said first and second rotary members.

15. The component mounting apparatus as according to claim 13, wherein each of said first and second rotary members is rotatable about a horizontal axis, and wherein said first and second nozzles are positioned, respectively, on said first and second rotary members at regular intervals about the horizontal axis.

16. The component mounting apparatus according to claim 13, wherein said first and second component supply tables are to accommodate different kinds of components.

17. The component mounting apparatus according to claim 13, wherein at least one of said first and second component supply tables is capable of continuously supplying components.

18. The component mounting apparatus as claimed in claim 13, wherein said first rotary member is rotatable about a horizontal axis, and said first nozzles are mounted on said first rotary member so that each of said first nozzles can be selectively and sequentially directed downwardly to suck a component from said first component supply table and mount the sucked component onto the board when the board is at the board mounting position.

JUL 0 6 2005

REMARKS

Accordingly, a Certificate of Correction should issue at no expense to patentee. Form PTO-1050 accompanies this request, in duplicate.

Respectfully submitted,

Kanji HATA et al.

By Joseph M. Gorski

Joseph M. Gorski
Registration No. 46,500
Attorney for Patentees

JMG/edg
Washington, D.C.
Telephone (202) 721-8200
Facsimile (202) 721-8250
June 29, 2005

JUL 0 6 2005

To: The Commissioner for Patents, P.O. Box 1450, Alexandria, VA 22313-1450

UNITED STATES PATENT AND TRADEMARK OFFICE

CERTIFICATE OF CORRECTION

PATENT NO	:	6,789,310
DATED	:	September 14, 2004
INVENTOR(S)	:	Kanji HATA et al.

It is certified that error appears in the above-identified patent and that said Letters Patent is hereby corrected as shown below:

IN THE CLAIMS:

Replace claims 1-21 of the patent with the following claims.

1. A component mounting apparatus comprising:

first and second component supply tables for accommodating a plurality of components, said first and second component supply tables being arranged on both sides of a board transfer path;

a first rotary member having first nozzles, wherein said first rotary member is rotatable such that upon rotation of said first rotary member said first nozzles simultaneously rotate for successively picking up first components at said first component supply table by suction, thereafter said first rotary member can be moved to a board positioned at a board mounting position, and the picked-up first components can be successively mounted onto the board while said first rotary member is moved in first and second directions which are perpendicular to each other, with the first direction being perpendicular to the board transfer path, and the second direction being located along the board transfer path; and

a second rotary member having second nozzles, wherein said second rotary member is rotatable such that upon rotation of said second rotary member said second nozzles simultaneously rotate for successively picking up second components at said second component supply table by suction, thereafter said second rotary member can move to the board positioned at the board mounting position, and the picked-up second components can be successively mounted onto the board while said

To: The Commissioner for Patents, P.O. Box 1450, Alexandria, VA 22313-1450

UNITED STATES PATENT AND TRADEMARK OFFICE

CERTIFICATE OF CORRECTION

PATENT NO	:	6,789,310
DATED	:	September 14, 2004
INVENTOR(S)	:	Kanji HATA et al.

It is certified that error appears in the above-identified patent and that said Letters Patent is hereby corrected as shown below:

IN THE CLAIMS (cont'd)

second rotary member moves in third and fourth directions which are perpendicular to each other, with the third direction being parallel to the first direction, and the fourth direction being parallel to the second direction but not necessarily the same as the second direction,

wherein each of said first and second rotary members is independently moveable between a respective one of said first and second component supply tables and the board when the board is at the board mounting position, and said first rotary member is capable of mounting picked-up components onto the board while said second rotary member successively sucks to pick up components at said second component supply table.

2. The component mounting apparatus as claimed in claim 1, wherein the first, second, third and fourth directions are each in a plane that is parallel to the board transfer path.

JUL 0 6 2005

To: The Commissioner for Patents, P.O. Box 1450, Alexandria, VA 22313-1450

UNITED STATES PATENT AND TRADEMARK OFFICE

CERTIFICATE OF CORRECTION

PATENT NO	:	6,789,310
DATED	:	September 14, 2004
INVENTOR(S)	:	Kanji HATA et al.

It is certified that error appears in the above-identified patent and that said Letters Patent is hereby corrected as shown below:

IN THE CLAIMS (cont'd)

3. The component mounting apparatus as claimed in claim 2, further comprising a controller for mutually controlling said first and second rotary members in accordance with a timing at which, when said first rotary member carries out a component picking-up operation for picking-up components from said first component supply table, said second rotary member carries out a component mounting operation for mounting picked-up components onto the board when the board is at the board mounting position.

4. The component mounting apparatus as claimed in claim 1, further comprising a controller for mutually controlling said first and second rotary members in accordance with a timing at which, when said first rotary member carries out a component picking-up operation for picking-up components from said first component supply table, said second rotary member carries out a component mounting operation for mounting picked-up components onto the board when the board is at the board mounting position.

JUL 0 6 2005

To: The Commissioner for Patents, P.O. Box 1450, Alexandria, VA 22313-1450

UNITED STATES PATENT AND TRADEMARK OFFICE

CERTIFICATE OF CORRECTION

PATENT NO	:	6,789,310
DATED	:	September 14, 2004
INVENTOR(S)	:	Kanji HATA et al.

It is certified that error appears in the above-identified patent and that said Letters Patent is hereby corrected as shown below:

IN THE CLAIMS (cont'd)

5. The component mounting apparatus according to claim 1, further comprising a board positioning section for positioning the board at the board mounting position such that the board is not moved during mounting of components thereon via said first and second rotary members.

6. The component mounting apparatus according to claim 1, wherein said first and second component supply tables are to accommodate different kinds of components.

7. The component mounting apparatus according to claim 1, wherein at least one of said first and second component supply tables is capable of continuously supplying components.

8. The component mounting apparatus as claimed in claim 1, wherein said first rotary member is rotatable about a horizontal axis, and said first nozzles are mounted on said first rotary member so that each of said first nozzles can be selectively and sequentially directed downwardly to suck a component from said first component supply table and mount the sucked component onto the board when the board is at the board mounting position.

Wenderoth, Lind & Ponack, L.L.P.
2033 K Street, N. W., Suite 800
Washington, D.C. 20006-1021

JUL 0 6 2005

To: The Commissioner for Patents, P.O. Box 1450, Alexandria, VA 22313-1450

UNITED STATES PATENT AND TRADEMARK OFFICE
CERTIFICATE OF CORRECTION

PATENT NO	:	6,789,310
DATED	:	September 14, 2004
INVENTOR(S)	:	Kanji HATA et al.

It is certified that error appears in the above-identified patent and that said Letters Patent is hereby corrected as shown below:

IN THE CLAIMS (cont'd)

9. A component mounting apparatus comprising:

first and second component supply tables for accommodating a plurality of components, said first and second component supply tables being arranged on opposite sides of a board mounting position, wherein a board transfer path along which a board is transferred extends between said first and second component supply tables;

a first rotary member having first nozzles, wherein said first rotary member is rotatable such that upon rotation of said first rotary member said first nozzles simultaneously rotate for successively picking up first components at said first component supply table and thereafter successively mounting the plural picked-up first components onto a board, positioned at the board mounting position, while moving in first and second directions which are perpendicular to each other, with the first direction being perpendicular to the board transfer path, and the second direction being located along the board transfer path; and

a second rotary member having second nozzles, wherein said second rotary member is rotatable such that upon rotation of said second rotary member said second nozzles simultaneously rotate for successively picking up second components at said second component supply table and thereafter

JUL 0 6 2005

To: The Commissioner for Patents, P.O. Box 1450, Alexandria, VA 22313-1450

UNITED STATES PATENT AND TRADEMARK OFFICE

CERTIFICATE OF CORRECTION

PATENT NO	:	6,789,310
DATED	:	September 14, 2004
INVENTOR(S)	:	Kanji HATA et al.

It is certified that error appears in the above-identified patent and that said Letters Patent is hereby corrected as shown below:

IN THE CLAIMS (cont'd)

successively mounting the picked-up second components onto the board, positioned at the board mounting position, while moving in third and fourth directions which are perpendicular to each other, with the third direction being parallel to the first direction, and the fourth direction being parallel to the second direction but not necessarily the same as the second direction,

wherein each of said first and second rotary members is independently movable between a respective one of said first and second component supply tables and the board when the board is at the board mounting position, and

wherein said first rotary member is capable of mounting picked-up components onto the board, at the board mounting position, while said second rotary member successively picks up components, via said second nozzles, at said second component supply table.

10. The component mounting apparatus according to claim 9, wherein said first and second component supply tables are to accommodate different kinds of components.

JUL 0 6 2005

To: The Commissioner for Patents, P.O. Box 1450, Alexandria, VA 22313-1450

UNITED STATES PATENT AND TRADEMARK OFFICE

CERTIFICATE OF CORRECTION

PATENT NO	:	6,789,310
DATED	:	September 14, 2004
INVENTOR(S)	:	Kanji HATA et al.

It is certified that error appears in the above-identified patent and that said Letters Patent is hereby corrected as shown below:

IN THE CLAIMS (cont'd)

11. The component mounting apparatus according to claim 9, wherein at least one of said first and second component supply tables is capable of continuously supplying components.

12. The component mounting apparatus as claimed in claim 9, wherein said first rotary member is rotatable about a horizontal axis, and said first nozzles are mounted on said first rotary member so that each of said first nozzles can be selectively and sequentially directed downwardly to suck a component from said first component supply table and mount the sucked component onto the board when the board is at the board mounting position.

13. A component mounting apparatus comprising:

first and second component supply tables for accommodating a plurality of components, said component supply tables being arranged on both sides of a board transfer path;

a first rotary member having first nozzles, wherein said first rotary member is rotatable such that upon rotation of said first rotary member said first nozzles simultaneously rotate for successively picking up first components at said first component supply table and thereafter successively mounting the

JUL 0 6 2005

To: The Commissioner for Patents, P.O. Box 1450, Alexandria, VA 22313-1450

UNITED STATES PATENT AND TRADEMARK OFFICE

CERTIFICATE OF CORRECTION

PATENT NO	:	6,789,310
DATED	:	September 14, 2004
INVENTOR(S)	:	Kanji HATA et al.

It is certified that error appears in the above-identified patent and that said Letters Patent is hereby corrected as shown below:

IN THE CLAIMS (claim 13 cont'd)

picked-up first components onto a board that is positioned at a board mounting position, said first rotary member being movable in first and second directions which are perpendicular to each other, with the first direction being perpendicular to the board transfer path, and the second direction being along the board transfer path; and

a second rotary member having second nozzles, wherein said second rotary member is rotatable such that upon rotation of said second rotary member said second nozzles simultaneously rotate for successively picking up second components at said second component supply table and thereafter successively mounting the picked-up second components onto the board, positioned at the board mounting position, while said second rotary member moves in third and fourth directions which are perpendicular to each other, with the third direction being perpendicular to the board transfer path, and the fourth direction being along the board transfer path,

wherein each of said first and second rotary members is independently movable between a respective one of said first and second component supply tables and the board when the board is at the board mounting position, and

wherein said first rotary member is capable of mounting picked-up first components onto the board, at the board mounting position, while said second rotary member successively picks up components at said second component supply table.

To: The Commissioner for Patents, P.O. Box 1450, Alexandria, VA 22313-1450

UNITED STATES PATENT AND TRADEMARK OFFICE

CERTIFICATE OF CORRECTION

PATENT NO	:	6,789,310
DATED	:	September 14, 2004
INVENTOR(S)	:	Kanji HATA et al.

It is certified that error appears in the above-identified patent and that said Letters Patent is hereby corrected as shown below:

IN THE CLAIMS (cont'd)

14. The component mounting apparatus according to claim 13, further comprising a board positioning section for positioning the board at the board mounting position such that the board is not moved during mounting of components thereon by said first and second rotary members.

15. The component mounting apparatus as according to claim 13, wherein each of said first and second rotary members is rotatable about a horizontal axis, and wherein said first and second nozzles are positioned, respectively, on said first and second rotary members at regular intervals about the horizontal axis.

16. The component mounting apparatus according to claim 13, wherein said first and second component supply tables are to accommodate different kinds of components.

17. The component mounting apparatus according to claim 13, wherein at least one of said first and second component supply tables is capable of continuously supplying components.

JUL 06 2005

To: The Commissioner for Patents, P.O. Box 1450, Alexandria, VA 22313-1450

UNITED STATES PATENT AND TRADEMARK OFFICE

CERTIFICATE OF CORRECTION

PATENT NO	:	6,789,310
DATED	:	September 14, 2004
INVENTOR(S)	:	Kanji HATA et al.

It is certified that error appears in the above-identified patent and that said Letters Patent is hereby corrected as shown below:

IN THE CLAIMS (cont'd)

18. The component mounting apparatus as claimed in claim 13, wherein said first rotary member is rotatable about a horizontal axis, and said first nozzles are mounted on said first rotary member so that each of said first nozzles can be selectively and sequentially directed downwardly to suck a component from said first component supply table and mount the sucked component onto the board when the board is at the board mounting position.

JUL 0 0 2005

UNITED STATES PATENT AND TRADEMARK OFFICE

UNDER SECRETARY OF COMMERCE FOR INTELLECTUAL PROPERTY AND
DIRECTOR OF THE UNITED STATES PATENT AND TRADEMARK OFFICE
WASHINGTON, DC 20231
www.uspto.gov

MAILED

JUL 0 8 2003

Office of the Director
Group 3600

FITZPATRICK, CELLA, HARPER & SCINTO
30 ROCKERFELLER PLAZA
NEW YORK, NY 10112-3801

In re application:	Knowlton et al.	DECISION ON PETITION UNDER 37 C.F.R. 1.181 TO EXPUNGE REMARKS MADE BY THE EXAMINER
Application No:	09/010,822	
Filed:	January 22, 1998	

Title: LOW TEMPERATURE AUTOIGNITION COMPOSITION

Applicant, in a letter received February 25, 2003 requests the expungement of disparaging and offensive remarks from the Office action mailed November 21, 2002. This decision will only address the applicant's concern with respect to Rule 1.3 and will not comment on the issues regarding the sufficiency of the art or the declaration, as those issues are subject to appeal, rather than petition.

The request is GRANTED-IN-PART.

Attached is an expunged copy of the Office action mailed on November 21, 2002. All the subject matter indicated by the applicant as disparaging has been expunged with the exception of the subject matter at the last 5 lines of page 4 of the Office action. This information has not been expunged as it has been determined that this is material to the examiners position regarding the alleged insufficiency of the declaration and is not deemed as a personal attack on the applicant.

The original copy of the Office action mailed November 21, 2002 has been replaced with the expunged copy. In that the applicant made a substantive response to the Office action in a response received on February 25, 2003, the Office action will not be remailed and the period for response will not be reset.

The original petition filed February 25, 2003 has been replaced with the petition filed July 1, 2003. The petition filed July 1, 2003 is identical to the original petition filed February 25, 2003 except for removal of the quoted disparaging remarks.

The application is being forwarded to the examiner for consideration of the amendment filed on February 25, 2003.

Any questions or concerns should be directed to Supervisory Patent Examiner, Michael J. Carone at 703 306-4198.

Donald T. Hajec
Director, TC 3600
703 306-4180

mc/kjd: 7/2/03

UNITED STATES PATENT AND TRADEMARK OFFICE

Commissioner for Patents
United States Patent and Trademark Office
P.O. Box 1450
Alexandria, VA 22313-1450
www.uspto.gov

NIXON & VANDERHYE, PC
901 NORTH GLEBE ROAD, 11TH FLOOR
ARLINGTON VA 22203

COPY MAILED

MAY 3 1 2006

OFFICE OF PETITIONS

In re Application of	:	
Geuze et al.	:	
Application No. 09/011,167	:	DECISION ON PETITION
Filed: October 5, 1998	:	
Attorney Docket No. RILE.001.OOU	:	

This is a decision on the petition under 37 CFR 1.137(b), filed February 9, 2006, to revive the above-identified application.

The application became abandoned for failure to reply timely to the Notice of Non-Compliant Amendment mailed on April 29, 2005. A Notice of Abandonment was mailed on November 29, 2005.

Petitioner has met the requirements to revive the above-identified application pursuant to 37 CFR 1.137(b). Petitioner submitted the required reply in the form of an amendment, paid the petition fee, and made the proper statement of unintentional delay. Accordingly, the petition is **granted.**

This matter is being referred to Technology Center Art Unit 1644.

Any inquiries concerning this decision may be directed to the undersigned at (571) 272-3211. All other inquiries concerning either the examination procedures or status of the application should be directed to the Technology Center.

Christina Tartera Donnell

Christina Tartera Donnell
Senior Petitions Attorney
Office of Petitions

Enclosures: Notice of Acceptance of Power of Attorney and Notice Regarding Change of Power of Attorney

UNITED STATES PATENT AND TRADEMARK OFFICE

COMMISSIONER FOR PATENTS
UNITED STATES PATENT AND TRADEMARK OFFICE
WASHINGTON, D.C. 20231
www.uspto.gov

Paper No. 33

Edmund J. Sease, Esquire
Zarley, McKee, Thomas, Voorhees & Sease, P.L.C.
801 Grand Avenue, Suite 3200
Des Moines, IA 50309-2721

COPY MAILED

APR 1 4 2003

OFFICE OF PETITIONS

In re Application of :
Michael Nauck, et al. :
Application No. 09/011,940 :
Filed: March 3, 1999 :
Attorney Docket No. 864861USWO :

ON PETITION

This is a response to the petition under 37 CFR 1.137(b), filed by facsimile transmission on January 6, 2003, which is being treated as a petition under 37 CFR 1.181 to withdraw the holding of abandonment of the above-identified application.

The petition is **GRANTED**.

The above-identified application was held abandoned for failure to file an appeal brief (and fee required by 37 CFR 1.17(c)) within the time period provided in 37 CFR 1.192(a). However, petitioner argues that a timely response was filed. Petitioner explain that a Request for Continued Examination (RCE), an Amendment and an appropriate extension of time were filed using a certificate of facsimile transmission under 37 CFR 1.8(a) dated June 28, 2002. A copy of the Auto-Reply Facsimile Transmission has been included with the evidence provided January 6, 2003. While the original documents filed by facsimile transmission cannot be located, the evidence is convincing that the documents were received by facsimile transmission on June 28, 2002, and subsequently misplaced in the USPTO.

Since no petition to revive under 37 CVFR 1.137(b) is necessary, the petition fee is being refunded to counsel's deposit account. The holding of abandonment is hereby withdrawn.

The application file is being returned to Technology Center 1600, Art Unit 1639 for further processing the RCE on June 28, 2002.

Telephone inquiries concerning this decision should be directed to Cheryl Gibson-Baylor at (703)308-5111, or in her absence, Sherry D. Brinkley at (703)305-9220.

Cheryl Gibson Baylor

Cheryl Gibson-Baylor
Petitions Examiner
Office of Petitions
Office of the Deputy Commissioner
for Patent Examination Policy

Sherry D. Brinkley

Sherry D. Brinkley
Petitions Examiner

UNITED STATES PATENT AND TRADEMARK OFFICE

Commissioner for Patents
United States Patent and Trademark Office
P.O. Box 1450
Alexandria, VA 22313-1450
www.uspto.gov

In re Patent No. 6059535
Issue Date: May 9,2000
Application No. 09012101
Filed: January 22,1998
Attorney Docket No. PSI-113

:

:DECISION GRANTING PETITION
:UNDER 37 CFR 1.378(c)

:

This is a decision on the electronic petition, filed November 12,2009 ,under 37 CFR 1.378(c) to accept the unintentionally delayed payment of the 7.5 year maintenance fee for the above-identified patent.

The petition is **GRANTED**.

The maintenance fee is accepted, and the above-identified patent reinstated as of November 12,2009 . This decision also constitutes notice that the fee has been accepted. An electronic copy of the petition and this decision has been created as an entry in the Image File Wrapper. Nevertheless, petitioner should print and retain an independent copy.

Telephone inquiries related to this electronic decision should be directed to the Electronic Business Center at 1-866-217-9197.

PTO/SB/66 (03-09)
Approved for use through 03/31/2012. OMB 0651-0016
U.S. Patent and Trademark Office: U.S. DEPARTMENT OF COMMERCE
Under the Paperwork Reduction Act of 1995, no persons are required to respond to a collection of information unless it displays valid OMB control number.

PETITION TO ACCEPT UNINTENTIONALLY DELAYED PAYMENT OF MAINTENANCE FEE IN AN EXPIRED PATENT (37 CFR 1.378(c))

Patent Number	Issue Date (YYYY-MM-DD)	Application Number	Filing Date (YYYY-MM-DD)	Docket Number (if applicable)
6059535	2000-05-09	09012101	1998-01-22	PSYS 2

CAUTION: Maintenance fee (and surcharge, if any) payment must correctly identify: (1) the patent number and (2) the application number of the actual U.S. application leading to issuance of that patent to ensure the fee(s) is/are associated with the correct patent. 37 CFR 1.366(c) and (d).

SMALL ENTITY
☒ Patentee claims, or has previously claimed, small entity status. See 37 CFR 1.27.

LOSS OF ENTITLEMENT TO SMALL ENTITY STATUS
☐ Patentee is no longer entitled to small entity status. See 37 CFR 1.27(g)

NOT Small Entity		Small Entity	
Fee	Code	Fee	Code
○ 3 ½ year	(1551)	○ 3 ½ year	(2551)
○ 7 ½ year	(1552)	◉ 7 ½ year	(2552)
○ 11 ½ year	(1553)	○ 11 ½ year	(2553)

SURCHARGE
The surcharge required by 37 CFR 1.20(i)(2) (Fee Code 1558) must be paid as a condition of accepting unintentionally delayed payment of the maintenance fee.

MAINTENANCE FEE (37 CFR 1.20(e)-(g))
The appropriate maintenance fee must be submitted with this petition.

STATEMENT
THE UNDERSIGNED CERTIFIES THAT THE DELAY IN PAYMENT OF THE MAINTENANCE FEE TO THIS PATENT WAS UNINTENTIONAL

PETITIONER(S) REQUEST THAT THE DELAYED PAYMENT OF THE MAINTENANCE FEE BE ACCEPTED AND THE PATENT REINSTATED

THIS PORTION MUST BE COMPLETED BY THE SIGNATORY OR SIGNATORIES

37 CFR 1.378(d) states: "Any petition under this section must be signed by an attorney or agent registered to practice before the Patent and Trademark Office, or by the patentee, the assignee, or other party in interest."

I certify, in accordance with 37 CFR 1.4(d)(4) that I am

◉ An attorney or agent registered to practice before the Patent and Trademark Office

○ A sole patentee

○ A joint patentee; I certify that I am authorized to sign this submission on behalf of all the other patentees.

○ A joint patentee; all of whom are signing this e-petition

○ The assignee of record of the entire interest

Patent Practitioner			
A signature of the applicant or representative is required in accordance with 37 CFR 1.33 and 10.18. Please see 37 CFR 1.4(d) for the form of the signature			
Signature	/J. Dwight Poffenberger, Jr./	Date (YYYY-MM-DD)	2009-11-12
Name	J. Dwight Poffenberger, Jr.	Registration Number	35324

This collection of information is required by 37 CFR 1.378(c). The information is required to obtain or retain a benefit by the public which is to file (and by the USPTO to process) an application. Confidentiality is governed by 35 U.S.C. 122 and 37 CFR 1.11 and 1.14. This collection is estimated to take 1 hour to complete, including gathering, preparing, and submitting the completed application form to the USPTO. Time will vary depending upon the individual case. Any comments on the amount of time you require to complete this form and/ or suggestions for reducing this burden, should be sent to the Chief Information Officer, U.S. Patent and Trademark Office, U.S. Department of Commerce, P.O. Box 1450, Alexandria, VA 22313-1450. DO NOT SEND FEES OR COMPLETED FORMS TO THIS ADDRESS. **This form can only be used when in conjunction with EFS-Web. If this form is mailed to the USPTO, it may cause delays in reinstating the patent.**

Privacy Act Statement

The Privacy Act of 1974 (P.L. 93-579) requires that you be given certain information in connection with your submission of the attached form related to a patent application or patent. Accordingly, pursuant to the requirements of the Act, please be advised that: (1) the general authority for the collection of this information is 35 U.S.C. 2(b)(2); (2) furnishing of the information solicited is voluntary; and (3) the principal purpose for which the information is used by the U.S. Patent and Trademark Office is to process and/or examine your submission related to a patent application or patent. If you do not furnish the requested information, the U.S. Patent and Trademark Office may not be able to process and/or examine your submission, which may result in termination of proceedings or abandonment of the application or expiration of the patent.

The information provided by you in this form will be subject to the following routine uses:

1. The information on this form will be treated confidentially to the extent allowed under the Freedom of Information Act (5 U.S.C. 552) and the Privacy Act (5 U.S.C. 552a). Records from this system of records may be disclosed to the Department of Justice to determine whether the Freedom of Information Act requires disclosure of these records.

2. A record from this system of records may be disclosed, as a routine use, in the course of presenting evidence to a court, magistrate, or administrative tribunal, including disclosures to opposing counsel in the course of settlement negotiations.

3. A record in this system of records may be disclosed, as a routine use, to a Member of Congress submitting a request involving an individual, to whom the record pertains, when the individual has requested assistance from the Member with respect to the subject matter of the record.

4. A record in this system of records may be disclosed, as a routine use, to a contractor of the Agency having need for the information in order to perform a contract. Recipients of information shall be required to comply with the requirements of the Privacy Act of 1974, as amended, pursuant to 5 U.S.C. 552a(m).

5. A record related to an International Application filed under the Patent Cooperation Treaty in this system of records may be disclosed, as a routine use, to the International Bureau of the World Intellectual Property Organization, pursuant to the Patent Cooperation Treaty.

6. A record in this system of records may be disclosed, as a routine use, to another federal agency for purposes of National Security review (35 U.S.C. 181) and for review pursuant to the Atomic Energy Act (42 U.S.C. 218(c)).

7. A record from this system of records may be disclosed, as a routine use, to the Administrator, General Services, or his/her designee, during an inspection of records conducted by GSA as part of that agency's responsibility to recommend improvements in records management practices and programs, under authority of 44 U.S.C. 2904 and 2906. Such disclosure shall be made in accordance with the GSA regulations governing inspection of records for this purpose, and any other relevant (i.e., GSA or Commerce) directive. Such disclosure shall not be used to make determinations about individuals.

8. A record from this system of records may be disclosed, as a routine use, to the public after either publication of the application pursuant to 35 U.S.C. 122(b) or issuance of a patent pursuant to 35 U.S.C. 151. Further, a record may be disclosed, subject to the limitations of 37 CFR 1.14, as a routine use, to the public if the record was filed in an application which became abandoned or in which the proceedings were terminated and which application is referenced by either a published application, an application open to public inspections or an issued patent.

9. A record from this system of records may be disclosed, as a routine use, to a Federal, State, or local law enforcement agency, if the USPTO becomes aware of a violation or potential violation of law or regulation.

UNITED STATES PATENT AND TRADEMARK OFFICE

COMMISSIONER FOR PATENTS
UNITED STATES PATENT AND TRADEMARK OFFICE
WASHINGTON, D.C. 20231
www.uspto.gov

Paper No. 20

EASTMAN KODAK COMPANY
PATENT LEGAL STAFF
343 STATE STREET
ROCHESTER, NY 14650-2201

COPY MAILED

APR 0 4 2002

OFFICE OF PETITIONS

In re Application of
Napoli et al.
Application No. 09/012,144
Filed: January 22, 1998
Attorney Docket No. 77140DMW

ON PETITION

This is a decision on the petition under 37 CFR 1.137(a), filed on August 6, 2001, to revive the above-identified application.[1] The petition asserts timely mailing of a proper reply to the last Office action and is being treated as a petition under 37 CFR 1.181 to withdraw the holding of abandonment for this application.

The petition is **GRANTED.**

A Notice of Appeal was filed on September 11, 2000 (Certificate of Mailing date September 1, 2000) in response to the March 1, 2000 final Office Action.[2] Under 37 CFR 1.192(a), an appeal brief was due on November 14, 2000 (Tuesday).[3] No appeal brief was filed on or before November 14, 2000 and no extension of time under 37 CFR 1.136(a) was obtained. Consequently, the appeal was dismissed. Since no claims were allowed in the March 1, 2000 final Office Action, this application became abandoned as of November 12, 2000.[4] A Notice of Abandonment was mailed on June 18, 2001.

---

1 A 1/25/02 "Request for Status of Petition to Revive Abandoned Application" brought to the attention of the Office that a petition to revive had been filed on 8/6/01 via U.S. Postal Service "Express Mail Post Office to Addressee" service under mailing label number ET 042051860US.

2 The Notice of Appeal was filed along with a request for a 3-month extension of time. As indicated in the 9/19/00 Advisory Action letter, an "After Final Amendment & Request for Reconsideration" filed concurrently with the Notice of Appeal was not entered by the Examiner because it raises new issues.

3 The 2-month period for filing the appeal brief starts from 9/11/00, the PTO receipt date of the Notice of Appeal, and ends on 11/11/00, a Saturday and Veteran's Day, a Federal holiday which was observed on 11/13/00, the following Monday. An appeal brief filed on 11/14/00, the first business day after 11/13/00, would have been considered "timely." See MPEP sections 1206 and 710.01(a) (Aug. 2001).

4 See 37 CFR 1.192 (b) (On failure to file the brief, accompanied by the requisite fee, within the time allowed, the appeal shall stand dismissed.) and MPEP section 1215.04 (Aug. 2001) (If no brief is filed within the time prescribed by 37 CFR 1.192, the appeal stands dismissed by operation of the rule. If no claims stand allowed, the application is considered as abandoned on the date the brief was due.). Even though under 37 CFR 1.7(a), an appeal brief filed on or before 11/14/00 (Tuesday) would have been considered "timely," failure to file an appeal brief on or before 11/14/00 renders the appeal dismissed and the application abandoned as of 11/12/00.

The August 6, 2001 petition asserts that an appeal brief was mailed on March 1, 2001 along with a Certificate of Mailing and a request for a 4-month extension of time to file the appeal brief,[5] thus implying that the application should not be held abandoned. In support, the petition encloses a copy of the allegedly mailed appeal brief and a transmittal letter both bearing a "03/01/01" Certificate of Mailing.

Correspondence required to be filed in the PTO within a set period of time will be considered as being timely filed if it is deposited as first class mail with the U.S. Postal Service in accordance with the procedure set forth in 37 CFR 1.8(a). In the instant case, however, the allegedly mailed appeal brief is not in the file for this application. In order to have this appeal brief considered timely filed as alleged, i.e., filed on the Certificate of Mailing date of March 1, 2001, 37 CFR 1.8(b) requires counsel for Applicants to:

(1) inform the PTO of such mailing promptly after becoming aware of the PTO's non-receipt of the mailed appeal brief;[6]

(2) supply an additional copy of the previously mailed appeal brief;[7] and

(3) provide a statement attesting on a personal knowledge basis . . . to the previous timely mailing of the appeal brief.[8]

The August 6, 2001 petition meets the above requirements under 37 CFR 1.8(b).[9] The Office thus concludes that an appeal brief was timely filed on March 1, 2001, and that the appeal was not dismissed by operation of the rule. Therefore, the application was not abandoned and the holding of abandonment for this application is hereby withdrawn. The Office sincerely apologizes for any inconvenience caused by the delay.

---

5 A 4-month extension of time would have extended the due date for the appeal brief to 3/1/01, and would render an appeal brief mailed on 3/1/01 with a proper certificate of mailing "timely" filed.

6 This condition is considered to have been met, in that, the 8/6/01 petition was filed less than 2 months after the 6/18/01 Notice of Abandonment, and there is no evidence of counsel's prior knowledge of PTO's non-receipt of the appeal brief.

7 In addition to the copy of the 3/1/01 Appeal Brief enclosed with the 8/6/01 petition, counsel submitted 3 additional copies on April 2, 2002 (37 CFR 1.192(a) requires an appeal brief to be filed in triplicate).

8 The 3/1/01 Certificate of Mailing bears the signature of Marc A. Rossi, who is also the registered practitioner who attests to the 3/1/01 mailing in the 8/6/01 petition.

9 See *supra* notes 6-8.

No petition fee is owed.[10] As authorized in the March 1, 2001 Appeal Brief Transmittal, Deposit Account No. 18-2056 has been charged the appeal brief filing fee of $310, and $1,390 for a 4-month extension of time to file the appeal brief.[11]

Finally, the practitioner signing the August 6, 2001 petition does not appear to have a power of attorney to prosecute this application, and uses a correspondence address which is different from that in the Official record for this application. If this practitioner desires to receive future correspondence regarding this application, an appropriate power of attorney as well as a change of correspondence address must be submitted. While a courtesy copy of this decision is being mailed to this practitioner, all future correspondence will be directed to the address currently of record unless and until such time as appropriate instructions are received to the contrary.[12]

The application is being forwarded to Technology Center 2700 for review of the appeal brief submitted with the August 6, 2001 petition.

Telephone inquiries concerning this decision may be directed to Petitions Attorney RC Tang at (703) 308-0763.

RC Tang
Petitions Attorney
Office of Petitions
Office of the Deputy Commissioner
for Patent Examination Policy

cc: Marc A. Rossi, Esq.
Rossi & Associates
PO Box 826
Ashburn, VA 20146-0826
Docket No. 77140 - KODA: 267

---

[10] A petition to withdraw the holding of abandonment does not require a fee. See MPEP 711.03(c)(I) (Aug. 2001).

[11] Both are fees in effect on 3/1/01 when the appeal brief was filed.

[12] Note, however, MPEP section 403.02 (Aug. 2001): "if . . . a second attorney is . . . appointed without revocation of the power of the first attorney, . . . the Office letters are to be sent to [the second attorney]." If the current correspondence address is to be retained while an outside counsel prosecutes the application, Applicants/Assignee may so indicate in the new power of attorney should one be filed later.

UNITED STATES PATENT AND TRADEMARK OFFICE

Commissioner for Patents
United States Patent and Trademark Office
P.O. Box 1450
Alexandria, VA 22313-1450
www.uspto.gov

In re Patent No. 6202347
Issue Date: March 20,2001
Application No. 09012171
Filed: January 22,1998
Attorney Docket No. 8402.494

:
:DECISION GRANTING PETITION
:UNDER 37 CFR 1.378(c)
:

This is a decision on the electronic petition, filed March 24,2009 ,under 37 CFR 1.378(c) to accept the unintentionally delayed payment of the 7.5 year maintenance fee for the above-identified patent.

The petition is **GRANTED**.

The maintenance fee is accepted, and the above-identified patent reinstated as of March 24,2009 .
This decision also constitutes notice that the fee has been accepted. An electronic copy of the petition and this decision has been created as an entry in the Image File Wrapper. Nevertheless, petitioner should print and retain an independent copy.

Telephone inquiries related to this electronic decision should be directed to the Electronic Business Center at 1-866-217-9197.

PTO/SB/66 (03-09)
Approved for use through 03/31/2012. OMB 0651-0016
U.S. Patent and Trademark Office: U.S. DEPARTMENT OF COMMERCE
Under the Paperwork Reduction Act of 1995, no persons are required to respond to a collection of information unless it displays valid OMB control number.

PETITION TO ACCEPT UNINTENTIONALLY DELAYED PAYMENT OF MAINTENANCE FEE IN AN EXPIRED PATENT (37 CFR 1.378(c))

Patent Number	Issue Date (YYYY-MM-DD)	Application Number	Filing Date (YYYY-MM-DD)	Docket Number (if applicable)
6202347	2001-03-20	09/012,171	1998-01-22	8402.494

CAUTION: Maintenance fee (and surcharge, if any) payment must correctly identify: (1) the patent number and (2) the application number of the actual U.S. application leading to issuance of that patent to ensure the fee(s) is/are associated with the correct patent. 37 CFR 1.366(c) and (d).

SMALL ENTITY
☐ Patentee claims, or has previously claimed, small entity status. See 37 CFR 1.27.

LOSS OF ENTITLEMENT TO SMALL ENTITY STATUS
☐ Patentee is no longer entitled to small entity status. See 37 CFR 1.27(g)

NOT Small Entity		Small Entity	
Fee	Code	Fee	Code
○ 3 ½ year	(1551)	○ 3 ½ year	(2551)
◉ 7 ½ year	(1552)	○ 7 ½ year	(2552)
○ 11 ½ year	(1553)	○ 11 ½ year	(2553)

SURCHARGE
The surcharge required by 37 CFR 1.20(i)(2) (Fee Code 1558) must be paid as a condition of accepting unintentionally delayed payment of the maintenance fee.

MAINTENANCE FEE (37 CFR 1.20(e)-(g))
The appropriate maintenance fee must be submitted with this petition.

STATEMENT
THE UNDERSIGNED CERTIFIES THAT THE DELAY IN PAYMENT OF THE MAINTENANCE FEE TO THIS PATENT WAS UNINTENTIONAL

PETITIONER(S) REQUEST THAT THE DELAYED PAYMENT OF THE MAINTENANCE FEE BE ACCEPTED AND THE PATENT REINSTATED

THIS PORTION MUST BE COMPLETED BY THE SIGNATORY OR SIGNATORIES

37 CFR 1.378(d) states: "Any petition under this section must be signed by an attorney or agent registered to practice before the Patent and Trademark Office, or by the patentee, the assignee, or other party in interest."

I certify, in accordance with 37 CFR 1.4(d)(4) that I am

◉ An attorney or agent registered to practice before the Patent and Trademark Office

○ A sole patentee

○ A joint patentee; I certify that I am authorized to sign this submission on behalf of all the other patentees.

○ A joint patentee; all of whom are signing this e-petition

○ The assignee of record of the entire interest

Patent Practitioner			
A signature of the applicant or representative is required in accordance with 37 CFR 1.33 and 10.18. Please see 37 CFR 1.4(d) for the form of the signature			
Signature	/kathrynlhester/	Date (YYYY-MM-DD)	2009-03-24
Name	Kathryn L. Hester, Ph.D.	Registration Number	46768

This collection of information is required by 37 CFR 1.378(c). The information is required to obtain or retain a benefit by the public which is to file (and by the USPTO to process) an application. Confidentiality is governed by 35 U.S.C. 122 and 37 CFR 1.11 and 1.14. This collection is estimated to take 1 hour to complete, including gathering, preparing, and submitting the completed application form to the USPTO. Time will vary depending upon the individual case. Any comments on the amount of time you require to complete this form and/ or suggestions for reducing this burden, should be sent to the Chief Information Officer, U.S. Patent and Trademark Office, U.S. Department of Commerce, P.O. Box 1450, Alexandria, VA 22313-1450. DO NOT SEND FEES OR COMPLETED FORMS TO THIS ADDRESS. **This form can only be used when in conjunction with EFS-Web. If this form is mailed to the USPTO, it may cause delays in reinstating the patent.**

Privacy Act Statement

The Privacy Act of 1974 (P.L. 93-579) requires that you be given certain information in connection with your submission of the attached form related to a patent application or patent. Accordingly, pursuant to the requirements of the Act, please be advised that: (1) the general authority for the collection of this information is 35 U.S.C. 2(b)(2); (2) furnishing of the information solicited is voluntary; and (3) the principal purpose for which the information is used by the U.S. Patent and Trademark Office is to process and/or examine your submission related to a patent application or patent. If you do not furnish the requested information, the U.S. Patent and Trademark Office may not be able to process and/or examine your submission, which may result in termination of proceedings or abandonment of the application or expiration of the patent.

The information provided by you in this form will be subject to the following routine uses:

1. The information on this form will be treated confidentially to the extent allowed under the Freedom of Information Act (5 U.S.C. 552) and the Privacy Act (5 U.S.C. 552a). Records from this system of records may be disclosed to the Department of Justice to determine whether the Freedom of Information Act requires disclosure of these records.

2. A record from this system of records may be disclosed, as a routine use, in the course of presenting evidence to a court, magistrate, or administrative tribunal, including disclosures to opposing counsel in the course of settlement negotiations.

3. A record in this system of records may be disclosed, as a routine use, to a Member of Congress submitting a request involving an individual, to whom the record pertains, when the individual has requested assistance from the Member with respect to the subject matter of the record.

4. A record in this system of records may be disclosed, as a routine use, to a contractor of the Agency having need for the information in order to perform a contract. Recipients of information shall be required to comply with the requirements of the Privacy Act of 1974, as amended, pursuant to 5 U.S.C. 552a(m).

5. A record related to an International Application filed under the Patent Cooperation Treaty in this system of records may be disclosed, as a routine use, to the International Bureau of the World Intellectual Property Organization, pursuant to the Patent Cooperation Treaty.

6. A record in this system of records may be disclosed, as a routine use, to another federal agency for purposes of National Security review (35 U.S.C. 181) and for review pursuant to the Atomic Energy Act (42 U.S.C. 218(c)).

7. A record from this system of records may be disclosed, as a routine use, to the Administrator, General Services, or his/her designee, during an inspection of records conducted by GSA as part of that agency's responsibility to recommend improvements in records management practices and programs, under authority of 44 U.S.C. 2904 and 2906. Such disclosure shall be made in accordance with the GSA regulations governing inspection of records for this purpose, and any other relevant (i.e., GSA or Commerce) directive. Such disclosure shall not be used to make determinations about individuals.

8. A record from this system of records may be disclosed, as a routine use, to the public after either publication of the application pursuant to 35 U.S.C. 122(b) or issuance of a patent pursuant to 35 U.S.C. 151. Further, a record may be disclosed, subject to the limitations of 37 CFR 1.14, as a routine use, to the public if the record was filed in an application which became abandoned or in which the proceedings were terminated and which application is referenced by either a published application, an application open to public inspections or an issued patent.

9. A record from this system of records may be disclosed, as a routine use, to a Federal, State, or local law enforcement agency, if the USPTO becomes aware of a violation or potential violation of law or regulation.

UNITED STATES PATENT AND TRADEMARK OFFICE

Commissioner for Patents
United States Patent and Trademark Office
P.O. Box 1450
Alexandria, VA 22313-1450
www.uspto.gov

Darby & Darby P.C.
P.O.Box 5257
New York, NY 10150-5257

In re Application: Duan-Cheng Hsieh Patent No. 5,980,071 Issue Date: November 9, 1999 Attny Docket No. 04046/0201139-US0	Decision on Petition

This is a decision on a petition under 37 CFR 1.324 filed April 26, 2004, requesting that the name of the inventors in the patent be corrected.

The petition and verified statement of facts state that an error occurred in the naming of inventors because the contribution of an additional inventor to the invention were inadvertently left off, that the named inventor did not realize that contributions had been made by the additional inventor, Lee Schaak.

Based on the file record as a whole and the facts as set forth above and in the petition, the error in inventorship occurred without deceptive intent and was diligently corrected.

The 37 C.F.R. 1.324 petition to correct the inventorship is **Granted.**

Sandra L. O'Shea
S.P.E. Art Unit 2875
Technology Center 2800

UNITED STATES PATENT AND TRADEMARK OFFICE

Commissioner for Patents
United States Patent and Trademark Office
P.O. Box 1450
Alexandria, VA 22313-1450
www.uspto.gov

FISH & RICHARDSON
225 FRANKLIN STREET
BOSTON, MA 02110-2804

COPY MAILED

MAY 1 1 2004

OFFICE OF PETITIONS

In re Application of :
Harry Meade et al :
Application No. 09/012,904 : ON PETITION
Filed: January 23, 1998 :
Attorney Docket No. TCI-028DV :

This is a decision on the petition under 37 CFR 1.137(b), filed May 6, 2004, to revive the above-identified application.

The petition is **GRANTED**.

The above-identified application became abandoned for failure to reply within the meaning of 37 CFR 1.113 in a timely manner to the final Office action mailed September 10, 2003, which set a shortened statutory period for reply of three (3) months. A reply under 37 CFR 1.113 is limited to an amendment that *prima facie* places the application in condition for allowance or a Notice of Appeal (and appeal fee required by 37 CFR 1.17(b)). Since the amendment submitted does not *prima facie* placing the application in condition for allowance, no Notice of Appeal (and appeal fee), or a continuing application was timely filed. Extension of time under the provisions of 37 CFR 1.136(a) were obtained. Accordingly, the above-identified application became abandoned on March 11, 2004.

It is not apparent whether the person signing the statement of unintentional delay was in a position to have firsthand or direct knowledge of the facts and circumstances of the delay at issue. Nevertheless, such statement is being treated as having been made as the result of a reasonable inquiry into the facts and circumstances of such delay. See 37 CFR 10.18(b) and Changes to Patent Practice and Procedure; Final Rule Notice, 62 Fed. Reg. 53131, 53178 (October 10, 1997), 1203 Off. Gaz. Pat. Office 63, 103 (October 21, 1997). In the event that such an inquiry has not been made, petitioner must make such an inquiry. If such inquiry results in the discovery that it is not correct that the entire delay in filing the required reply from the due date for the reply until the filing of a grantable petition pursuant to 37 CFR 1.137(b) was unintentional, petitioner must notify the Office.

There is no indication that the person signing the instant petition was ever given a power of attorney or authorization of agent to prosecute the above-identified application. If the person signing the instant petition desires to receive future correspondence regarding this application, the appropriate power of attorney or authorization of agent must be submitted. While a courtesy

copy of this decision is being mailed to the person signing the instant petition, **all** future correspondence will be directed to the address of currently of record until such time as appropriate instructions are received to the contrary.

Pursuant to petitioner's authorization, Deposit Account No. 50-2092 was charged a total of $1,050.00 -- $665.00 for the petition to revive an unintentionally abandoned application and $385.00 for the request for continued examination (RCE).

Telephone inquiries concerning this decision should be directed to Wan Laymon at (703) 305-9282.

The application file is being referred to Technology Center AU 1636 for processing of the request for continued examination (RCE) under 37 CFR 1.114.

Wan Laymon
Petitions Examiner
Office of Petitions
Office of the Deputy Commissioner
for Patent Examination Policy

cc: GTC BIOTHERAPEUTICS INC.
175 CROSSING BLVD.
SUITE 410
FRAMINGHAM, MA 01702

UNITED STATES PATENT AND TRADEMARK OFFICE

COMMISSIONER FOR PATENTS
UNITED STATES PATENT AND TRADEMARK OFFICE
WASHINGTON, D.C. 20231
www.uspto.gov

NASH & TITUS, LLC
3415 BROOKEVILLE ROAD
SUITE 1000
BROOKEVILLE, MD 20833

COPY MAILED

JUN 26 2001

OFFICE OF PETITIONS
A/C PATENTS

In re Application of
Nauss, Reid, Wolf,
Scheherazade
Application No. 09/013,077
Filed: January 26, 1998
For: MODEL FOR TESTING
IMMUNOGENCITY OF PEPTIDES

DECISION REFUSING STATUS
UNDER 37 CFR 1.47(a)

This is in response to the "Request for Decision on Petition Under 37 CFR 1.47(a) and additional supporting data," filed May 2, 2001, and to the petition filed June 28, 2000.

The petition is dismissed.

Rule 47 applicant is given TWO MONTHS from the mailing date of this decision to reply, correcting the below-noted deficiencies. Any reply should be entitled "Request for Reconsideration of Petition Under 37 CFR 1.47(a)," and should only address the deficiencies noted below. Failure to respond will result in abandonment of the application. Any extensions of time will be governed by 37 CFR 1.136(a).

The reply to this decision may include an oath or declaration executed by the non-signing inventor in compliance with 37 CFR 1.63. (If a declaration is filed by the currently non-signing inventor, please make sure that the declaration lists all inventors and does not suggest that the inventor is a sole inventor, such a declaration will neither comply with 37 CFR 1.63 nor evidence that the inventor is willing to join in the filing of this application.)

The above-identified application was filed on January 26, 1998 without an executed oath or declaration and naming Scheherazade as a joint inventor.

A grantable petition under 37 CFR 1.47(a) requires: (1) proof that the non-signing inventor cannot be reached or refuses to sign the oath or declaration after having been presented with the application papers (specification, claims and drawings); (2) an acceptable oath or declaration in compliance with 35 U.S.C. §§ 115 and 116; (3) the petition fee; and (4) a statement of the

last known address of the non-signing inventor. Applicant lacks items (1) and (2) set forth above.

As to item (1), Rule 47 applicant has failed to show that the inventor cannot be reached after a diligent effort to reach the inventor. Applicant has stated that calls were made to Johns Hopkins University and NIH "where it was rumored that she may be working." What other attempts were made to locate the inventor, e.g., through e-mail or the telephone?

As to item (2), an oath or declaration for the patent application signed by Nauss, Reid and Wolf in compliance with 37 CFR 1.63 and 1.64 still has not been presented. A declaration setting forth Mr. Scheherazade's residence, citizenship and post office address has not been presented. An oath or declaration in compliance with 37 CFR 1.63 and 1.64 signed by the available inventors, Mr. Nauss, Mr. Reid and Ms. Wolf, on behalf of themselves and Mr. Scheherzade is REQUIRED. See MPEP 409.03(a). It is unclear whether any of the available inventors actually signed the declarations; it appears as though they only filled out their names and addresses on the declaration but did not sign them.

Further correspondence with respect to this matter should be addressed as follows:

By mail: Assistant Commissioner for Patents
Box DAC
Washington, D.C. 20231

By FAX: (703) 308-6916
Attn: Special Program Law Office

By hand: Crystal Plaza Four, Suite 3C23
2201 South Clark Place
Arlington, VA 22202

Telephone inquiries related to this decision should be directed to the undersigned at (703) 306-3159.

Karin Tyson
Senior Legal Advisor
Special Program Law Office
Office of the Deputy Commissioner
for Patent Examination Policy

UNITED STATES PATENT AND TRADEMARK OFFICE

COMMISSIONER FOR PATENTS
UNITED STATES PATENT AND TRADEMARK OFFICE
WASHINGTON, D.C. 20231
www.uspto.gov

NASH & TITUS, LLC
3415 BROOKEVILLE ROAD
SUITE 1000
BROOKEVILLE, MD 20833

COPY MAILED

AUG 3 1 2001

OFFICE OF PETITIONS

In re Application of NAUSS,et al. Application No. 09/013,077 Filed: January 26, 1998 For: MODEL FOR TESTING IMMUNOGENCITY OF PEPTIDES	DECISION NOTING JOINDER OF INVENTOR AND PETITION UNDER 37 CFR 1.47(a) MOOT

Papers filed on August 9, 2001 in response to a "Decision Refusing Status Under 37 CFR 1.47(a)" mailed on June 26, 2001 included a Declaration signed by a previously non-signing inventor in compliance with 37 CFR 1.63.

In view of the joinder of the inventor, further consideration under Rule 1.47(a) is not necessary and the petition is considered to be moot. This application does not have any Rule 1.47 status and no such status should appear on the file wrapper. This application need not be returned to this Office for any further consideration under Rule 1.47(a).

This application is being forwarded to Group Art Unit 1618 for further processing.

Telephone inquiries regarding this communication should be directed to the undersigned at (703)306-3159.

Karin Tyson
Senior Legal Advisor
Office of Patent Legal Administration
Office of the Deputy Commissioner
for Patent Examination Policy

Enclosure: Filing Receipt

UNITED STATES PATENT AND TRADEMARK OFFICE

Commissioner for Patents
United States Patent and Trademark Office
P.O. Box 1450
Alexandria, VA 22313-1450
www.uspto.gov

Nash & Titus, LLC
21402 Unison Road
Middleburg, VA 20117

COPY MAILED

JUL 1 5 2005

OFFICE OF PETITIONS

In re Application of	:	
Jeffrey L. Nauss, et al.	:	
Application No. 09/013,077	:	ON PETITION
Filed: January 26, 1998	:	
Attorney Docket No. N/A	:	

This is a decision on the petition under 37 CFR 1.137(b), filed June 16, 2005, to revive the above-identified application.

The petition is **GRANTED**.

The application became abandoned for failure to timely submit the issue and publication fees.

The petition satisfies the requirements of 37 CFR 1.137(b) in that petitioner has supplied (1) the reply in the form of the issue and publication fees; (2) the petition fee of $1500; and (3) an adequate statement of unintentional delay.

The Office acknowledges receipt of the issue and publication fees, which were submitted with the petition.

Telephone inquiries concerning this decision should be directed to the undersigned at (571) 272-3223.

The application file is being referred to the Publishing Division to be processed into a patent.

Marianne E. Jenkins

Marianne E. Jenkins
Petitions Examiner
Office of Petitions

UNITED STATES PATENT AND TRADEMARK OFFICE

COMMISSIONER FOR PATENTS
UNITED STATES PATENT AND TRADEMARK OFFICE
P.O. BOX 1450
ALEXANDRIA, VA 22313-1450
WWW.USPTO.GOV

Paper No. 37

Elizabeth J. Haanes, Ph.D.
Sterne, Kessler, Goldstein & Fox, PLLC
1100 New York Avenue, NW
Suite 600
Washington, DC 20005-3934

COPY MAILED

JUL 16 2003

OFFICE OF PETITIONS

In re Patent No. 6,342,363 :
Issue Date: January 29, 2002 :
Application No. 09/013,895 : ON PETITION
Filed: January 27, 1998 :
Attorney Docket No. 1488.1300002 :

This is a decision on the petition filed June 4, 2003, to waive the rules and accept the correction of the assignee's name on the front page of the above-identified patent.

Since petitioner submitted $100 for the Request for Certificate of Correction on June 24, 2002, and June 4, 2003, one of these fees will be considered as a duplicate payment, and therefore, $100 will be refunded to petitioner's credit card, in due course.

The petition is **granted**.

The file is being forwarded to the Certificates of Correction Branch for issuance of the requested Certificate of Correction.

Telephone inquiries concerning this decision should be directed to Andrea Smith at (703) 308-6711. Questions concerning the Certificate of Correction may be directed to the Certificates of Correction Branch at (703) 305-8309.

Andrea Smith
Petitions Examiner
Office of Petitions
Office of the Deputy Commissioner
for Patent Examination Policy

Certificate

JUL 21 2003

of Correction

Best Available Copy

UNITED STATES PATENT AND TRADEMARK OFFICE

CERTIFICATE OF CORRECTION

PATENT NO. : 6,342,363 B1
DATED : January 29, 2002
INVENTOR(S) : Ni et al.

It is certified that error appears in the above-identified patent and that said Letters Patent is hereby corrected as shown below:

Column 60,
Line 18, please delete "27" and insert therein -- 31 --.
Line 22, please delete "29" and insert therein -- 33 --.
Line 29, please delete "32" and insert therein -- 35 --.
Line 31, please delete "34" and insert therein -- 37 --.
Line 35, please delete "38" and insert therein -- 39 --.
Line 37, please delete "39" and insert therein -- 40 --.

Column 65,
Line 43, please delete "152" and insert therein -- 156 --.
Line 50, please delete "imnmunoglobin" and insert therein -- immunoglobin --.

Column 66,
Line 14, please delete "1.1xSSC" and insert therein -- 0.1xSSC --.
Line 55, please delete "166" and insert therein -- 179 --.

Column 68,
Line 45, please delete "207" and insert therein -- 217 --.
Line 15, please delete "conditions s such" and insert therein -- conditions such --.

Column 72,
Line 6, please delete "The,polynucleotide" and insert therein -- The polynucleotide --.

Signed and Sealed this

Twenty-fourth Day of June, 2003

JAMES E. ROGAN
Director of the United States Patent and Trademark Office

UNITED STATES PATENT AND TRADEMARK OFFICE

CERTIFICATE OF CORRECTION

PATENT NO. : 6,342,363 B1
DATED : January 29, 2002
INVENTOR(S) : Ni et al.

It is certified that error appears in the above-identified patent and that said Letters Patent is hereby corrected as shown below:

Title page,
Item [73], please add -- **The Regents of the University of Michigan**, Ann Arbor, MI (US) --.

Signed and Sealed this

Twenty-sixth Day of August, 2003

JAMES E. ROGAN
Director of the United States Patent and Trademark Office

UNITED STATES PATENT & TRADEMARK OFFICE
Washington, D.C. 20231

Best Available Copy

REQUEST FOR PATENT FEE REFUND

1 Date of Request: 7/15/03

2 Serial/Patent # 6,348,363

	3 Please refund the following fee(s):	4 PAPER NUMBER	5 DATE FILED	6 AMOUNT
	Filing			$
	Amendment			$
	Extension of Time			$
	Notice of Appeal/Appeal			$
	Petition			$
	Issue			$
X	Cert of Correction/Terminal Disc.	36	6/4/03	$ 100
	Maintenance			$
	Assignment			$
	Other			$

7 TOTAL AMOUNT OF REFUND $ 100

8 TO BE REFUNDED BY:

X ~~Treasury Check~~ CC

Credit Deposit A/C #:

9 [ ][ ]--[ ][ ][ ][ ]

10 REASON:

	Overpayment
X	Duplicate Payment
X	No Fee Due (Explanation):

11 REFUND REQUESTED BY:

TYPED/PRINTED NAME: Andrea Smith TITLE: Pets. Exmr.

SIGNATURE: [signature] PHONE: 703/308-6711

OFFICE: Ofc. of Petitions

****

THIS SPACE RESERVED FOR FINANCE USE ONLY:

APPROVED: Alicia Kelly DATE: 7/16/03

Instructions for completion of this form appear on the back. After completion, attach white and yellow copies to the official file and mail or hand-carry to:

Office of Finance
Refund Branch
Crystal Park One, Room 802B

FORM PTO 1577
(01/90)

RAM Fee History Query

Revenue Accounting and Management

Name/Number: 6342363

Total Records Found: 3

Start Date: Any Date

End Date: Any Date

Accounting Date	Sequence Num.	Tran Type	Fee Code	Fee Amount	Mailroom Date	Payment Method
05/16/2003	00000010	2	1811	$100.00	06/24/2002	DA 190036
06/06/2003	00000097	2	1460	$130.00	06/04/2003	CC
06/06/2003	00000098	2	1811	$100.00	06/04/2003	CC

UNITED STATES PATENT AND TRADEMARK OFFICE

UNDER SECRETARY OF COMMERCE FOR INTELLECTUAL PROPERTY AND
DIRECTOR OF THE UNITED STATES PATENT AND TRADEMARK OFFICE
WASHINGTON, DC 20231
www.uspto.gov

MAILED

MAR 1 4 2002

#16

Office of the Director
Group 3600

Ralph E. Jocke
231 South Broadway
Medina, OH 44256

In re application of
Max A. Fedor, et al.
Application No. 09/014,076
Filed : January 27, 1998
For: METHOD FOR TRACKING AND DISPENSING MEDICAL ITEMS

DECISION ON PETITION FOR HOLDING OF DEFECTIVE APPEAL BRIEF

This is in response to applicants' petition received May 21, 2001 requesting withdrawal of the holding of defective appeal brief. This petition will be treated as a petition to invoke the supervisory authority of the Director of the United States Patent and Trademark Office (USPTO) under 37 CFR 1.181.

On March 9, 2001, petitioner timely submitted an appeal brief. The examiner mailed a notice of defective appeal brief on May 4, 2001. The sole reason given for holding the brief as defective was the length thereof. Petitioner filed the instant petition on May 21, 2001 requesting that the notice of defective brief be withdrawn as being based on an erroneous assertion that is contrary to USPTO policy regarding the standards that must be met when filing appeal briefs before the Board of Patent Appeals and Interferences (BPAI).

The petition is **GRANTED**.

An appeal to the BPAI is not an appeal to an Article III federal court of appeal. An appeal to the BPAI is an administrative proceeding provided in title 35 of the United States Code and title 37 Code of Federal Regulations. Although there are page limits provided in federal rules for appellate procedures within federal courts (Article III Courts), they do not apply to appeal briefs submitted to the BPAI.

37 CFR 1.943(c) provides for a page/word limit on briefs in *inter partes* reexamination proceedings. 37 CFR 2.128(b) also provides for express page limits of main briefs and reply briefs submitted to the Trademark Trial and Appeal Board. No such express language is provided elsewhere in title 35 of the United States Code and title 37 Code of Federal Regulations for a page/word limit on briefs in *ex parte* application or reexamination proceedings to the Board of Patent Appeals and Interferences. By negative implication, there is no such limit during *ex parte* application or reexamination proceedings.

Therefore, the notice of defective appeal brief of May 1, 2001 is hereby vacated and the appeal brief submitted on March 9, 2001 is deemed to be appropriate under 37 CFR 1.192.

The application will be forwarded to the assigned examiner for prompt consideration of the brief and preparation of an examiner's answer.

Gerald Goldberg, Director
Technology Center 3600
Telephone No.: (703) 308-1134
Facsimile No.: (703) 308-2177

DR
rar; 3/14/02

UNITED STATES PATENT AND TRADEMARK OFFICE

UNITED STATES DEPARTMENT OF COMMERCE
United States Patent and Trademark Office
Address: COMMISSIONER FOR PATENTS
P.O. Box 1450
Alexandria, Virginia 22313-1450
www.uspto.gov

APPLICATION NO.	FILING DATE	FIRST NAMED INVENTOR	ATTORNEY DOCKET NO.	CONFIRMATION NO.
09/014,076	01/27/1998	MAX A. FEDOR	D-1056 DIV3	4092

28995 7590 05/09/2008
RALPH E. JOCKE
walker & jocke LPA
231 SOUTH BROADWAY
MEDINA, OH 44256

EXAMINER
BUTLER, MICHAEL E

ART UNIT	PAPER NUMBER
3653	

MAIL DATE	DELIVERY MODE
05/09/2008	PAPER

Please find below and/or attached an Office communication concerning this application or proceeding.

The time period for reply, if any, is set in the attached communication.

UNITED STATES PATENT AND TRADEMARK OFFICE

Commissioner for Patents
United States Patent and Trademark Office
P.O. Box 1450
Alexandria, VA 22313-1450
www.uspto.gov

MAILED
FROM DIRECTORS OFFICE

MAY 0 8 2008

TECHNOLOGY CENTER 3600

Ralph E. Jocke
Walker & Jocke LPA
231 South Broadway
Medina, OH 44256

In re Application of Fedor, et al. Application No. 09/014,076 Filed: January 27, 1998 For: METHOD FOR TRACKING AND DISPENSING MEDICAL ITEMS	DECISION ON PETITION REGARDING REQUEST TO WITHDRAW REQUIREMENT FOR INFORMATION OR WITHDRAW A HOLDING OF NON-RESPONSIVE REPLY

This is a decision on the petition under 37 CFR 1.181 filed May 19, 2006, requesting withdrawal of a Requirement for Information pursuant to 37 CFR § 1.105 mailed December 19, 2005 or, alternatively, To Have the Holding Of Non-Responsive the Petitioner's Reply to the Requirement Withdrawn.

The petition to Withdraw the Requirement for Information is **DENIED**.
The petition to Withdraw the Holding of the Reply to the Requirement of Information as Non-Responsive is **GRANTED**.

This application was filed on January 27, 1998. A non-final office action was mailed on June 7, 2000 rejecting claims under 35 U.S.C. § 103 as unpatentable over Pearson '232 in view Meador. On August 30, 2000, in response to the rejection, Petitioner filed a Declaration of R. Michael McGrady under 37 CFR § 1.131 to swear back of the Pearson '232 and Meador references by establishing that the invention claimed in the instant application, or an obvious variation thereof, was completed by being conceived and reduced to practice in this country prior to March 7, 1994. In a final office action mailed November 16, 2000, the examiner indicated that the declaration was sufficient. On July 17, 2003, the Board of Patent Appeals and Interferences docketed an appeal in this application for decision. The Board of Patent Appeals and Interferences Remanded this application to the Examiner on July 23, 2004 with instructions to reconsider the sufficiency of the Declaration of R. Michael McGrady under 37 CFR § 1.131. On September 15, 2004, in response to the Remand, the Examiner clarified the record and provided reasons why the Declaration of R. Michael McGrady under 37 CFR § 1.131 to was deemed sufficient. On October 22, 2004, the Board of Patent Appeals and Interferences docketed this application for decision. On October 29, 2004, Petitioner filed a Reply Brief and the Board of Patent Appeals and Interferences Remanded this

application to the Examiner for consideration of the Reply Brief. On April 19, 2005, the Board of Patent Appeals and Interferences docketed the appeal in this application for decision for a third time. On December 15, 2005, the Board of Patent Appeals and Interferences, once again, Remanded this application to the Examiner with instructions to reconsider the sufficiency of the Declaration of R. Michael McGrady under 37 CFR § 1.131. On December 19, 2005, the Examiner mailed a Requirement for Information pursuant to 37 C.F.R. § 1.105 requesting additional evidence from the Petitioner to clarify the matter. On January 17, 2006, the Petitioner replied with remarks stating that the Declaration is sufficient. On May 3, 2006, the Examiner mailed an Advisory Action indicating that the Petitioner's reply was non-responsive to the Requirement for Information pursuant to 37 C.F.R. § 1.105. On May 19, 2006, Petitioner filed a Petition under 37 CFR 1.181 filed May 19, 2006, requesting the withdrawal of the Requirement for Information pursuant to 37 CFR § 1.105 mailed December 19, 2005 or To Have the Holding of Non-Responsive Withdrawn.

The Petitioner alleges the Requirement is legally improper because prosecution of the application is closed. Additionally, the Petitioner alleges that there is no evidence of Office policy for making the Requirement.

M.P.E.P. § 704.11(b) states, "A requirement for information under 37 CFR 1.105 is discretionary. A requirement may be made at any time once the necessity for it is recognized and should be made at the earliest opportunity after the necessity is recognized. The optimum time for making a requirement is prior to or with a first action on the merits because the examiner has the maximum opportunity to consider and apply the response. Ordinarily, a request for information should not be made with or after a final rejection."

In this application, the Requirement was made after a Remand from the Board of Patent Appeals and Interferences. Although the M.P.E.P. states that the best time to make a requirement is prior to or with a first action on the merits, and it states that ordinarily, a request should not be made with or after a final rejection, there is no prohibition on making a requirement for information at any time once the necessity for it is recognized. Therefore, the Requirement is not legally improper because prosecution of the application is closed.

The Petitioner also alleges that the Requirement is legally improper because the information requested is not reasonably necessary to properly examine or treat a matter in the application.

M.P.E.P. § 704.11 states, "The criteria stated in 37 CFR 1.105 for making a requirement for information is that the information be reasonably necessary to the examination or treatment of a matter in an application. The information required would typically be that necessary for finding prior art or for resolving an issue arising from the results of the search for art or from analysis of the application file. A requirement for information necessary for finding prior art is not a substitute for the examiner performing a search of the relevant prior art; the examiner must make a search of the art according to MPEP §

704.01 and §§ 904 – 904.03. The criteria of reasonable necessity is generally met, e.g., where:
(A) the examiner's search and preliminary analysis demonstrates that the claimed subject matter cannot be adequately searched by class or keyword among patents and typical sources of non-patent literature, or
(B) either the application file or the lack of relevant prior art found in the examiner's search justifies asking the applicant if he or she has information that would be relevant to the patentability determination."

In this application, the Examiner has requested the information to resolve an issue arising from the results of an analysis of the application file by the Board of Patent Appeals and Interferences. Therefore, the Requirement is legally proper and necessary to treat a matter in the application.

The Petitioner states that if the Petition regarding the legality of the Requirement is denied, the Petitioner requests withdrawal of the holding of the Reply to the Requirement filed January 17, 2006 as non-responsive to the Requirement.

M.P.E.P. § 704.12(b) states, "A reply stating that the information required to be submitted is unknown and/or is not readily available to the party or parties from which it was requested will generally be sufficient unless, for example, it is clear the applicant did not understand the requirement, or the reply was ambiguous and a more specific answer is possible.

In the response to the Requirement filed January 17, 2006, on page 4, lines 1-2, Petitioner states, "The information requested to be submitted is unknown and/or is not readily available to the party or parties from which it was requested." Therefore, the Petitioner's response to the Requirement was complete and responsive.

The holding of the Reply filed January 17, 2006 as Non-Responsive to the Requirement for Information is hereby vacated. The application will be forwarded to the Examiner for consideration of the above reply on its merits. If the Reply does not clarify the record regarding the sufficiency of the Declaration, the Examiner should reinstate any appropriate rejections and provide the applicant the opportunity to properly appeal the application to the Board of Patent Appeals and Interferences.

Any questions regarding this decision should be directed to Patrick Mackey at (571) 272-6916.

Kathy Matecki

Kathy Matecki, Director
Technology Center 3600
(571) 272-5250

Pm/snm: 4/28/08

SM

Under the Paperwork Reduction Act of 1995, no persons are required to respond to a collection of information unless it displays valid OMB control number.

PETITION TO ACCEPT UNINTENTIONALLY DELAYED PAYMENT OF MAINTENANCE FEE IN AN EXPIRED PATENT (37 CFR 1.378(c))

Patent Number	Issue Date (YYYY-MM-DD)	Application Number	Filing Date (YYYY-MM-DD)	Docket Number (if applicable)
5864892	1999-02-02	09014262	1998-01-27	

CAUTION: Maintenance fee (and surcharge, if any) payment must correctly identify: (1) the patent number and (2) the application number of the actual U.S. application leading to issuance of that patent to ensure the fee(s) is/are associated with the correct patent. 37 CFR 1.366(c) and (d).

SMALL ENTITY
☒ Patentee claims, or has previously claimed, small entity status. See 37 CFR 1.27.

LOSS OF ENTITLEMENT TO SMALL ENTITY STATUS
☐ Patentee is no longer entitled to small entity status. See 37 CFR 1.27(g)

NOT Small Entity		Small Entity	
Fee	Code	Fee	Code
○ 3 ½ year	(1551)	○ 3 ½ year	(2551)
○ 7 ½ year	(1552)	◉ 7 ½ year	(2552)
○ 11 ½ year	(1553)	○ 11 ½ year	(2553)

SURCHARGE
The surcharge required by 37 CFR 1.20(i)(2) (Fee Code 1558) must be paid as a condition of accepting unintentionally delayed payment of the maintenance fee.

MAINTENANCE FEE (37 CFR 1.20(e)-(g))
The appropriate maintenance fee must be submitted with this petition.

STATEMENT
THE UNDERSIGNED CERTIFIES THAT THE DELAY IN PAYMENT OF THE MAINTENANCE FEE TO THIS PATENT WAS UNINTENTIONAL

PETITIONER(S) REQUEST THAT THE DELAYED PAYMENT OF THE MAINTENANCE FEE BE ACCEPTED AND THE PATENT REINSTATED

THIS PORTION MUST BE COMPLETED BY THE SIGNATORY OR SIGNATORIES

37 CFR 1.378(d) states: "Any petition under this section must be signed by an attorney or agent registered to practice before the Patent and Trademark Office, or by the patentee, the assignee, or other party in interest."

I certify, in accordance with 37 CFR 1.4(d)(4) that I am

◉ An attorney or agent registered to practice before the Patent and Trademark Office

○ A sole patentee

○ A joint patentee; I certify that I am authorized to sign this submission on behalf of all the other patentees.

○ A joint patentee; all of whom are signing this e-petition

○ The assignee of record of the entire interest

Patent Practitioner			
A signature of the applicant or representative is required in accordance with 37 CFR 1.33 and 10.18. Please see 37 CFR 1.4(d) for the form of the signature			
Signature	/Kevin L. Klug/	Date (YYYY-MM-DD)	2009-01-26
Name	Kevin L. Klug	Registration Number	38756

This collection of information is required by 37 CFR 1.378(c). The information is required to obtain or retain a benefit by the public which is to file (and by the USPTO to process) an application. Confidentiality is governed by 35 U.S.C. 122 and 37 CFR 1.11 and 1.14. This collection is estimated to take 1 hour to complete, including gathering, preparing, and submitting the completed application form to the USPTO. Time will vary depending upon the individual case. Any comments on the amount of time you require to complete this form and/ or suggestions for reducing this burden, should be sent to the Chief Information Officer, U.S. Patent and Trademark Office, U.S. Department of Commerce, P.O. Box 1450, Alexandria, VA 22313-1450. DO NOT SEND FEES OR COMPLETED FORMS TO THIS ADDRESS. **This form can only be used when in conjunction with EFS-Web. If this form is mailed to the USPTO, it may cause delays in reinstating the patent.**

Privacy Act Statement

The Privacy Act of 1974 (P.L. 93-579) requires that you be given certain information in connection with your submission of the attached form related to a patent application or patent. Accordingly, pursuant to the requirements of the Act, please be advised that: (1) the general authority for the collection of this information is 35 U.S.C. 2(b)(2); (2) furnishing of the information solicited is voluntary; and (3) the principal purpose for which the information is used by the U.S. Patent and Trademark Office is to process and/or examine your submission related to a patent application or patent. If you do not furnish the requested information, the U.S. Patent and Trademark Office may not be able to process and/or examine your submission, which may result in termination of proceedings or abandonment of the application or expiration of the patent.

The information provided by you in this form will be subject to the following routine uses:

1. The information on this form will be treated confidentially to the extent allowed under the Freedom of Information Act (5 U.S.C. 552) and the Privacy Act (5 U.S.C. 552a). Records from this system of records may be disclosed to the Department of Justice to determine whether the Freedom of Information Act requires disclosure of these record s.

2. A record from this system of records may be disclosed, as a routine use, in the course of presenting evidence to a court, magistrate, or administrative tribunal, including disclosures to opposing counsel in the course of settlement negotiations.

3. A record in this system of records may be disclosed, as a routine use, to a Member of Congress submitting a request involving an individual, to whom the record pertains, when the individual has requested assistance from the Member with respect to the subject matter of the record.

4. A record in this system of records may be disclosed, as a routine use, to a contractor of the Agency having need for the information in order to perform a contract. Recipients of information shall be required to comply with the requirements of the Privacy Act of 1974, as amended, pursuant to 5 U.S.C. 552a(m).

5. A record related to an International Application filed under the Patent Cooperation Treaty in this system of records may be disclosed, as a routine use, to the International Bureau of the World Intellectual Property Organization, pursuant to the Patent Cooperation Treaty.

6. A record in this system of records may be disclosed, as a routine use, to another federal agency for purposes of National Security review (35 U.S.C. 181) and for review pursuant to the Atomic Energy Act (42 U.S.C. 218(c)).

7. A record from this system of records may be disclosed, as a routine use, to the Administrator, General Services, or his/her designee, during an inspection of records conducted by GSA as part of that agency's responsibility to recommend improvements in records management practices and programs, under authority of 44 U.S.C. 2904 and 2906. Such disclosure shall be made in accordance with the GSA regulations governing inspection of records for this purpose, and any other relevant (i.e., GSA or Commerce) directive. Such disclosure shall not be used to make determinations about individuals.

8. A record from this system of records may be disclosed, as a routine use, to the public after either publication of the application pursuant to 35 U.S.C. 122(b) or issuance of a patent pursuant to 35 U.S.C. 151. Further, a record may be disclosed, subject to the limitations of 37 CFR 1.14, as a routine use, to the public if the record was filed in an application which became abandoned or in which the proceedings were terminated and which application is referenced by either a published application, an application open to public inspections or an issued patent.

9. A record from this system of records may be disclosed, as a routine use, to a Federal, State, or local law enforcement agency, if the USPTO becomes aware of a violation or potential violation of law or regulation.

UNITED STATES PATENT AND TRADEMARK OFFICE

Commissioner for Patents
United States Patent and Trademark Office
P.O. Box 1450
Alexandria, VA 22313-1450
www.uspto.gov

PERKINS COIE LLP
PATENT-SEA
P.O. BOX 1247
SEATTLE, WA 98111-1247

COPY MAILED

OCT 0 3 2005

OFFICE OF PETITIONS

In re Patent No. 6,304,838 :
Issue Date: October 16, 2001 :
Application No. 09/014,297 : ON PETITION
Filed: January 27, 1998 :
Patentee: Fred A. Brown :

This is a notice regarding your request for acceptance of a fee deficiency submission under 37 CFR 1.28. On September 1, 1998, the Court of Appeals for the Federal Circuit held that 37 CFR 1.28(c) is the sole provision governing the time for correction of the erroneous payment of the issue fee as a small entity. **See DH Technology v. Synergystex International, Inc. 154 F.3d 1333, 47 USPQ2d 1865 (Fed. Cir. Sept. 1, 1998).**

The Office no longer investigates or rejects original or reissue applications under 37 CFR 1.56. **1098 Off. Gaz. Pat. Office 502 (January 3, 1989)**. Therefore, nothing in this Notice is intended to imply that an investigation was done.

Your fee deficiency submission under 37 CFR 1.28 is hereby **ACCEPTED**.

This application is no longer entitled to small entity status. Accordingly, all future fees paid in this application must be paid at the large entity rate.

Telephone inquiries concerning this decision should be directed to the undersigned at (571) 272-3229.

The application matter is being referred to Files Repository.

Retta Williams

Retta Williams
Petitions Examiner
Office of Petitions
Office of the Deputy Commissioner
for Patent Examination Policy

UNITED STATES DEPARTMENT OF COMMERCE
Patent and Trademark Office
ASSISTANT SECRETARY OF COMMERCE AND
COMMISSIONER OF PATENTS AND TRADEMARKS
Washington, DC 2023

January 28, 2003

Nils E. Pedersen
Wenderoth, Lind & Ponack
2033 "K" Street, N.W.
Suite 800
Washington, DC 20006

In re application of:
Katsuaki Matsui et al DECISION ON PETITION
Serial No.: 09/014,401
Filed: January 27, 1998
For: METHOD AND DEVICE FOR GENERATING
CONSTANT VOLTAGE

This is a decision on the petition received on November 1, 2002, to withdraw the holding of abandonment in the above-identified application.

The above-identified application became abandoned for failure to reply within the meaning of 37 C.F.R. 1.113 in timely manner to the Notice to File Missing Parts of Application mailed August 18, 1998. Which set a shortened statutory period for reply of two (2) months. Accordingly, this application became abandoned October 20, 1998. A notice of abandonment was mailed April 1, 1999.

On November 1, 2002, the office received a communication from the attorney of record. Enclosed was an acknowledgement that the attorney never received the Notice to File Missing Parts mailed August 18, 1998.

The evidence submitted is sufficient to establish that the petitioners never received the Notice to File Missing parts mailed August 18, 1998.

The petition is hereby GRANTED.

A new Notice to File Missing Parts is enclosed with this Decision setting forth a new response period of two months from the date of the notice.

The office regrets any inconvenience this may have caused the client.

Telephone inquiries concerning this matter may be directed to Doshie E. Day at (703) 308-3640.

Doshie E. Day
Program Management Assistant
Office Initial Patent Examination

Under the Paperwork Reduction Act of 1995, no persons are required to respond to a collection of information unless it displays valid OMB control number.

PETITION TO ACCEPT UNINTENTIONALLY DELAYED PAYMENT OF MAINTENANCE FEE IN AN EXPIRED PATENT (37 CFR 1.378(c))

Patent Number	Issue Date (YYYY-MM-DD)	Application Number	Filing Date (YYYY-MM-DD)	Docket Number (if applicable)
5,908,205	1999-06-01	09014675	1998-01-28	040302-0243994

CAUTION: Maintenance fee (and surcharge, if any) payment must correctly identify: (1) the patent number and (2) the application number of the actual U.S. application leading to issuance of that patent to ensure the fee(s) is/are associated with the correct patent. 37 CFR 1.366(c) and (d).

SMALL ENTITY
☒ Patentee claims, or has previously claimed, small entity status. See 37 CFR 1.27.

LOSS OF ENTITLEMENT TO SMALL ENTITY STATUS
☐ Patentee is no longer entitled to small entity status. See 37 CFR 1.27(g)

NOT Small Entity		Small Entity	
Fee	Code	Fee	Code
○ 3 ½ year	(1551)	○ 3 ½ year	(2551)
○ 7 ½ year	(1552)	◉ 7 ½ year	(2552)
○ 11 ½ year	(1553)	○ 11 ½ year	(2553)

SURCHARGE
The surcharge required by 37 CFR 1.20(i)(2) (Fee Code 1558) must be paid as a condition of accepting unintentionally delayed payment of the maintenance fee.

MAINTENANCE FEE (37 CFR 1.20(e)-(g))
The appropriate maintenance fee must be submitted with this petition.

STATEMENT
THE UNDERSIGNED CERTIFIES THAT THE DELAY IN PAYMENT OF THE MAINTENANCE FEE TO THIS PATENT WAS UNINTENTIONAL

PETITIONER(S) REQUEST THAT THE DELAYED PAYMENT OF THE MAINTENANCE FEE BE ACCEPTED AND THE PATENT REINSTATED

THIS PORTION MUST BE COMPLETED BY THE SIGNATORY OR SIGNATORIES

37 CFR 1.378(d) states: "Any petition under this section must be signed by an attorney or agent registered to practice before the Patent and Trademark Office, or by the patentee, the assignee, or other party in interest."

I certify, in accordance with 37 CFR 1.4(d)(4) that I am

◉ An attorney or agent registered to practice before the Patent and Trademark Office

○ A sole patentee

○ A joint patentee; I certify that I am authorized to sign this submission on behalf of all the other patentees.

○ A joint patentee; all of whom are signing this e-petition

○ The assignee of record of the entire interest

Patent Practitioner			
A signature of the applicant or representative is required in accordance with 37 CFR 1.33 and 10.18. Please see 37 CFR 1.4(d) for the form of the signature			
Signature	/E. Rico Hernandez/	Date (YYYY-MM-DD)	2007-11-21
Name	E. Rico Hernandez	Registration Number	47641

This collection of information is required by 37 CFR 1.378(c). The information is required to obtain or retain a benefit by the public which is to file (and by the USPTO to process) an application. Confidentiality is governed by 35 U.S.C. 122 and 37 CFR 1.11 and 1.14. This collection is estimated to take 1 hour to complete, including gathering, preparing, and submitting the completed application form to the USPTO. Time will vary depending upon the individual case. Any comments on the amount of time you require to complete this form and/ or suggestions for reducing this burden, should be sent to the Chief Information Officer, U.S. Patent and Trademark Office, U.S. Department of Commerce, P.O. Box 1450, Alexandria, VA 22313-1450. DO NOT SEND FEES OR COMPLETED FORMS TO THIS ADDRESS. **This form can only be used when in conjunction with EFS-Web. If this form is mailed to the USPTO, it may cause delays in reinstating the patent.**

Privacy Act Statement

The Privacy Act of 1974 (P.L. 93-579) requires that you be given certain information in connection with your submission of the attached form related to a patent application or patent. Accordingly, pursuant to the requirements of the Act, please be advised that: (1) the general authority for the collection of this information is 35 U.S.C. 2(b)(2); (2) furnishing of the information solicited is voluntary; and (3) the principal purpose for which the information is used by the U.S. Patent and Trademark Office is to process and/or examine your submission related to a patent application or patent. If you do not furnish the requested information, the U.S. Patent and Trademark Office may not be able to process and/or examine your submission, which may result in termination of proceedings or abandonment of the application or expiration of the patent.

The information provided by you in this form will be subject to the following routine uses:

1. The information on this form will be treated confidentially to the extent allowed under the Freedom of Information Act (5 U.S.C. 552) and the Privacy Act (5 U.S.C. 552a). Records from this system of records may be disclosed to the Department of Justice to determine whether the Freedom of Information Act requires disclosure of these record s.

2. A record from this system of records may be disclosed, as a routine use, in the course of presenting evidence to a court, magistrate, or administrative tribunal, including disclosures to opposing counsel in the course of settlement negotiations.

3. A record in this system of records may be disclosed, as a routine use, to a Member of Congress submitting a request involving an individual, to whom the record pertains, when the individual has requested assistance from the Member with respect to the subject matter of the record.

4. A record in this system of records may be disclosed, as a routine use, to a contractor of the Agency having need for the information in order to perform a contract. Recipients of information shall be required to comply with the requirements of the Privacy Act of 1974, as amended, pursuant to 5 U.S.C. 552a(m).

5. A record related to an International Application filed under the Patent Cooperation Treaty in this system of records may be disclosed, as a routine use, to the International Bureau of the World Intellectual Property Organization, pursuant to the Patent Cooperation Treaty.

6. A record in this system of records may be disclosed, as a routine use, to another federal agency for purposes of National Security review (35 U.S.C. 181) and for review pursuant to the Atomic Energy Act (42 U.S.C. 218(c)).

7. A record from this system of records may be disclosed, as a routine use, to the Administrator, General Services, or his/her designee, during an inspection of records conducted by GSA as part of that agency's responsibility to recommend improvements in records management practices and programs, under authority of 44 U.S.C. 2904 and 2906. Such disclosure shall be made in accordance with the GSA regulations governing inspection of records for this purpose, and any other relevant (i.e., GSA or Commerce) directive. Such disclosure shall not be used to make determinations about individuals.

8. A record from this system of records may be disclosed, as a routine use, to the public after either publication of the application pursuant to 35 U.S.C. 122(b) or issuance of a patent pursuant to 35 U.S.C. 151. Further, a record may be disclosed, subject to the limitations of 37 CFR 1.14, as a routine use, to the public if the record was filed in an application which became abandoned or in which the proceedings were terminated and which application is referenced by either a published application, an application open to public inspections or an issued patent.

9. A record from this system of records may be disclosed, as a routine use, to a Federal, State, or local law enforcement agency, if the USPTO becomes aware of a violation or potential violation of law or regulation.

UNITED STATES PATENT AND TRADEMARK OFFICE

Commissioner for Patents
United States Patent and Trademark Office
P.O. Box 1450
Alexandria, VA 22313-1450
www.uspto.gov

In re Patent No. 5908205
Issue Date: June 1,1999
Application No. 09014675
Filed: January 28,1998
Attorney Docket No. PMS243994

:
:DECISION GRANTING PETITION
:UNDER 37 CFR 1.378(c)
:

This is a decision on the electronic petition, filed November 21,2007 ,under 37 CFR 1.378(c) to accept the unintentionally delayed payment of the 7.5 year maintenance fee for the above-identified patent.

The petition is GRANTED.

The maintenance fee is accepted, and the above-identified patent reinstated as of November 21,2007. This decision also constitutes notice that the fee has been accepted. An electronic copy of the petition and this decision has been created as an entry in an Image File Wrapper. Nevertheless, petitioner should print and retain an independent copy

Telephone inquires related to this electronic decision should be directed to the Electronic Business Center at 1-866-217-9197.

UNITED STATES PATENT AND TRADEMARK OFFICE

Commissioner for Patents
United States Patent and Trademark Office
P.O. Box 1450
Alexandria, VA 22313-1450
www.uspto.gov

Finnegan, Henderson, Farabow,
Garrett & Dunner, L.L.P.
1300 I Street, N.W.
Washington DC 20005-3315

Applicant: Sebastian Suerbaum et al.
Appl. No.: 09/015,078
Filing Date: January 29, 1998
U.S. Patent No.: 6,838,273
Issue Date: January 4, 2005
Title: CLONING AND CHARACTERIZATION OF THE Flba GENE OF *H.* PYLORI, PRODUCTION OF AFFLAGELLATE STRAINS
Attorney Docket No.: 2356.0073-01
Pub. No.: US 2003/0152579 A1
Pub. Date: August 14, 2003

This is in response to the request for correction of patent application publication under 37 CFR 1.221(b), which was received on October 7, 2003 for the above-identified application.

The instant request identifies errors in the published patent application publication. Since the application has already issued as a U.S. Patent the request is deemed moot.

The request is DISMISSED as moot.

Inquiries relating to this matter may be directed to Shelby Pittman at (703) 305-8169 (voice) or (703) 305-8568 (facsimile).

Shelby Pittman, For
Mark O. Polutta
Office of Patent Legal Administration
Office of the Deputy Commissioner
for Patent Examination Policy

UNITED STATES PATENT AND TRADEMARK OFFICE

COMMISSIONER FOR PATENTS
UNITED STATES PATENT AND TRADEMARK OFFICE
P.O. BOX 1450
ALEXANDRIA, VA 22313-1450
www.uspto.gov

Paper No.

FINNEGAN HENDERSON FARABOW
GARRETT AND DUNNER
1300 I STREET N W
WASHINGTON DC 20005-3315

COPY MAILED
SEP 27 2006
OFFICE OF PETITIONS

In re Patent No. 6,838,273	:	
Suerbaum et al.	:	DECISION ON REQUEST FOR
Issue Date: January 4, 2005	:	RECONSIDERATION OF
Application No. 09/015,078	:	PATENT TERM ADJUSTMENT
Filed: January 29, 1998	:	and
Atty Docket No. 2356-0073-01	:	NOTICE OF INTENT TO ISSUE
	:	CERTIFICATE OF CORRECTION
	:	

This is in response to the NOTICE OF ERROR IN THE DETERMINATION OF PATENT TERM ADJUSTMENT filed March 4, 2005. Patentees disclose that the revised patent term adjustment indicated on the patent should be thirteen (13) days not one hundred eighty-four (184) days. The instant paper was recently forwarded to the undersigned for consideration.

The request for correction of the revised patent term adjustment indicated on the patent is **GRANTED** to the extent indicated herein.

The patent term adjustment indicated in the patent is to be corrected by issuance of a certificate of correction showing a revised Patent Term Adjustment of zero (0) days.

On January 4, 2005, the application matured into U.S. Patent No. 6,838,273, with a revised patent term adjustment of 184 days. On March 4, 2005, patentees timely submitted this request for reconsideration of patent term adjustment (with required fee), asserting that the correct number of days of Patent Term

Adjustment is 13, given that the patent issued on January 4, 2005.

A review of the application history reveals that periods of reduction of 109 days and 87 days (in place of a reduction of 34 days) should be entered. Pursuant to 37 CFR § 1.704(c)(7) a period of reduction of 109 days should be entered for patentees' filing of a paper on December 10, 2001, correcting an omission in their response filed 109 days earlier on August 23, 2001. See Communication mailed November 15, 2001. Pursuant to 37 CFR § 1.704(b), a reduction of 87 days, not 34 days, should be entered for patentees' taking until November 14, 2003, to file a Notice of Appeal in response to the final Office action mailed May 19, 2003. The response after final Office action filed September 22, 2003 was not in compliance with § 1.113(c) and thus, should not have been used in calculating the period of reduction.

Further, 37 CFR § 1.703(a) provides in pertinent part that:

> The period of adjustment under § 1.702(a) is the sum of the following periods:
>
> (3) The number of days, if any, in the period beginning on the day after the date that is four months after the date a reply in compliance with § 1.113(c) was filed and ending on the date of mailing of either an action under 35 U.S.C. 132, or a notice of allowance under 35 U.S.C. 151, whichever occurs first;

As the Office action filed September 22, 2003 was not in compliance with § 1.113(c), the entry of a period of adjustment of 63 days is incorrect. A review of the record reveals no basis for concluding that the mailing of a Notice of Allowance on March 25, 2004 constituted examination delay within the meaning of 35 U.S.C. 154(b). The entry of the period of adjustment of 63 days has been removed.

In view thereof, the correct determination of PTA at the time of the mailing of the notice of allowance is ZERO (0) days.

As this letter was submitted as an advisement to the Office of an error in Patentees' favor, the Office will not assess the $200.00 fee under 37 CFR 1.18(e). The Office thanks patentees

for their good faith and candor in bringing this to the attention of the Office.

The application file is being forwarded to the Certificates of Correction Branch for issuance of a certificate of correction in order to rectify this error. The Office will issue a certificate of correction indicating that the term of the above-identified patent is extended or adjusted by zero (0) days.

Telephone inquiries specific to this matter should be directed to the undersigned at (571) 272-3219.

Nancy Johnson
Senior Petitions Attorney
Office of Petitions

Enclosure: Copy of DRAFT Certificate of Correction

UNITED STATES PATENT AND TRADEMARK OFFICE

COMMISSIONER FOR PATENTS
UNITED STATES PATENT AND TRADEMARK OFFICE
P.O. BOX 1450
ALEXANDRIA, VA 22313-1450
www.uspto.gov

Paper No.

FINNEGAN HENDERSON FARABOW
GARRETT AND DUNNER
1300 I STREET N W
WASHINGTON DC 20005-3315

COPY MAILED
OCT 1 8 2006
OFFICE OF PETITIONS

In re Patent No. 6,838,273	:	**CORRECTED**
Suerbaum et al.	:	DECISION ON REQUEST FOR
Issue Date: January 4, 2005	:	RECONSIDERATION OF
Application No. 09/015,078	:	PATENT TERM ADJUSTMENT
Filed: January 29, 1998	:	and
Atty Docket No. 2356-0073-01	:	NOTICE OF INTENT TO ISSUE
	:	CERTIFICATE OF CORRECTION
	:	

This is in response to the NOTICE OF ERROR IN THE DETERMINATION OF PATENT TERM ADJUSTMENT filed March 4, 2005. Patentees disclose that the revised patent term adjustment indicated on the patent should be thirteen (13) days not one hundred eighty-four (184) days.

As discussed herein, this corrected decision is written to revise the previous decision to remove entry of a period of reduction of 109 days and to correct the revised patent term adjustment from 0 days to 68 days.

The request for correction of the revised patent term adjustment indicated on the patent is **GRANTED** to the extent indicated herein.

The patent term adjustment indicated in the patent is to be corrected by issuance of a certificate of correction showing a revised Patent Term Adjustment of sixty-eight **(68)** days.

On January 4, 2005, the application matured into U.S. Patent No. 6,838,273, with a revised patent term adjustment of 184 days. On March 4, 2005, patentees timely submitted this request for reconsideration of patent term adjustment (with required fee), asserting that the correct number of days of Patent Term Adjustment is 13 days, given that the patent issued on January 4, 2005.

It was previously determined that a review of the application history reveals that periods of reduction of 109 days and 87 days (in place of a reduction of 34 days) should be entered. However, upon further review, it is determined that a period of reduction of 109 days pursuant to 37 CFR § 1.704(c)(7) should not be entered for patentees' filing of a paper on December 10, 2001, correcting an omission in their response filed 109 days earlier on August 23, 2001. See Communication mailed November 15, 2001. A further review reveals that the paper filed December 10, 2001 disputed that there was any omission in the response filed August 23, 2001. Furthermore, the Office proceeded with examination of the application without any further filing in response to the communication mailed November 15, 2001.

The previous decision was correct that pursuant to 37 CFR § 1.704(b), a reduction of 87 days, not 34 days, should be entered for patentees' taking until November 14, 2003, to file a Notice of Appeal in response to the final Office action mailed May 19, 2003. The response after final Office action filed September 22, 2003 was not in compliance with § 1.113(c) and thus, should not have been used in calculating the period of reduction.

Further, 37 CFR § 1.703(a) provides in pertinent part that:

> The period of adjustment under § 1.702(a) is the sum of the following periods:
>
> (3) The number of days, if any, in the period beginning on the day after the date that is four months after the date a reply in compliance with § 1.113(c) was filed and ending on the date of mailing of either an action under 35 U.S.C. 132, or a notice of allowance under 35 U.S.C. 151, whichever occurs first;

As the Office action filed September 22, 2003 was not in compliance with § 1.113(c), the entry of a period of adjustment of 63 days is incorrect. A review of the record reveals no basis for concluding that the mailing of a Notice of Allowance on March 25, 2004 constituted examination delay within the meaning of 35 U.S.C. 154(b). The entry of the period of adjustment of 63 days has been removed.

Although patentees state that they are only entitled to 13 days of patent term adjustment, a review of the record reveals no further basis for reduction. It is specifically noted that Office records show that the Issue Fee payment was received on June 24, 2004, within three months of the mailing of the Notice of Allowance mailed March 25, 2004. Thus, there is no basis for entry of a period of reduction in association with this filing.

In view thereof, the correct determination of PTA is sixty-eight (68) days.

As this letter was submitted as an advisement to the Office of an error in Patentees' favor, the Office will not assess the $200.00 fee under 37 CFR 1.18(e). The Office thanks patentees for their good faith and candor in bringing this to the attention of the Office.

The application file is being forwarded to the Certificates of Correction Branch for issuance of a certificate of correction in order to rectify this error. The Office will issue a certificate of correction indicating that the term of the above-identified patent is extended or adjusted by sixty-eight (68) days.

Telephone inquiries specific to this matter should be directed to the undersigned at (571) 272-3219.

Nancy Johnson
Senior Petitions Attorney
Office of Petitions

Enclosure: Copy of DRAFT Certificate of Correction

Day : Saturday
Date: 10/14/2006

PALM INTRANET

Time: 14:18:39

PTA Calculations for Application: 09/015078			
Application Filing Date:	01/29/1998	PTO Delay (PTO):	338
Issue Date of Patent:	01/04/2005	Three Years:	0
Pre-Issue Petitions:	0	Applicant Delay (APPL):	154
Post-Issue Petitions:	0	Total PTA (days):	68
PTO Delay Adjustment:	-116		

File Contents History

Number	Date	Contents Description	PTO	APPL	START
99	10/13/2006	ADJUSTMENT OF PTA CALCULATION BY PTO	109		
98	09/27/2006	RECORD A PETITION DECISION OF GRANTED FOR PATENT TERM ADJUSTMENT AFTER ISSUE			
97	09/26/2006	ADJUSTMENT OF PTA CALCULATION BY PTO		63	
96	06/28/2006	ADJUSTMENT OF PTA CALCULATION BY PTO	34		
95	06/28/2006	ADJUSTMENT OF PTA CALCULATION BY PTO		87	
94	06/28/2006	ADJUSTMENT OF PTA CALCULATION BY PTO		109	
87.5	12/15/2004	PTA 36 MONTHS			
87	01/04/2005	PATENT ISSUE DATE USED IN PTA CALCULATION	72		81
86	11/16/2004	RECEIPT INTO PUBS			
85	11/12/2004	DISPATCH TO FDC			
84	11/12/2004	DISPATCH TO FDC			
83	11/12/2004	APPLICATION IS CONSIDERED READY FOR ISSUE			
82	06/24/2004	WORKFLOW - DRAWINGS FINISHED		120	
81	06/24/2004	ISSUE FEE PAYMENT VERIFIED			
80	07/27/2004	WORKFLOW - REQUEST FOR CPA - FINISH			
79	06/24/2004	WORKFLOW - DRAWINGS FINISHED		0	
78	10/25/2004	RECEIPT INTO PUBS			
77	10/21/2004	RECEIPT INTO PUBS			
76	09/02/2004	RECEIPT INTO PUBS			
75	08/23/2004	WORKFLOW - QUERY REQUEST - FINISH			
74	08/09/2004	RECEIPT INTO PUBS			
73	08/05/2004	WORKFLOW - QUERY REQUEST - BEGIN			
72	06/24/2004	ISSUE FEE PAYMENT RECEIVED			
71	06/02/2004	WORKFLOW - QUERY REQUEST - FINISH			

70	05/18/2004	WORKFLOW - QUERY REQUEST - BEGIN			
69	04/27/2004	SEQUENCE FORWARDED TO PUBS ON TAPE			
68	04/20/2004	WORKFLOW - FILE SENT TO CONTRACTOR			
67	03/25/2004	MAIL NOTICE OF ALLOWANCE	63		54
66	03/24/2004	ISSUE REVISION COMPLETED			
65	03/24/2004	NOTICE OF ALLOWANCE DATA VERIFICATION COMPLETED			
64	03/24/2004	CASE DOCKETED TO EXAMINER IN GAU			
63	03/24/2004	NOTICE OF ALLOWABILITY			
62	02/11/2004	DATE FORWARDED TO EXAMINER			
61	02/03/2004	AMENDMENT/ARGUMENT AFTER NOTICE OF APPEAL			
60	02/03/2004	REQUEST FOR EXTENSION OF TIME - GRANTED			
59	11/14/2003	NOTICE OF APPEAL FILED			
58	11/14/2003	REQUEST FOR EXTENSION OF TIME - GRANTED			
57	10/16/2003	MAIL ADVISORY ACTION (PTOL - 303)			
56	10/16/2003	ADVISORY ACTION (PTOL-303)			
55	10/02/2003	DATE FORWARDED TO EXAMINER			
54	09/22/2003	AMENDMENT AFTER FINAL REJECTION		34	51
53	09/22/2003	REQUEST FOR EXTENSION OF TIME - GRANTED			
52	09/22/2003	AFFIDAVIT(S) (RULE 131 OR 132) OR EXHIBIT(S) RECEIVED			
51	05/19/2003	MAIL FINAL REJECTION (PTOL - 326)			
50	05/19/2003	FINAL REJECTION			
46	02/07/2003	DATE FORWARDED TO EXAMINER			
45	01/30/2003	RESPONSE AFTER NON-FINAL ACTION			
44	10/30/2002	MAIL NON-FINAL REJECTION	203		40
43	10/30/2002	NON-FINAL REJECTION			
42	08/21/2002	CRF IS GOOD TECHNICALLY / ENTERED INTO DATABASE			
41	08/20/2002	DATE FORWARDED TO EXAMINER			
40	12/10/2001	RESPONSE TO A LETTER TO COMPLY WITH THE SEQUENCE RULES			
39	11/15/2001	MAIL LETTER REQUIRING CRF (UNREADABLE, NON-COMPLIANT, NOT SUBMITTED)			
38	11/14/2001	CRF DISKETTE UNREADABLE / DID NOT COMPLY / REQUIRED BUT NOT SUBMITTED			

37	09/28/2001	CRF IS FLAWED TECHNICALLY / NOT ENTERED INTO DATABASE			
36	09/08/2001	DATE FORWARDED TO EXAMINER			
35	08/24/2001	FEE PAYMENT RECORDED (FEES FILED SEPARATELY E.G. NOT WITH ORIGINAL PAPERS, ETC).			
34	08/23/2001	PRELIMINARY AMENDMENT			
33	07/27/2001	WORKFLOW - REQUEST FOR CPA - BEGIN			
32	08/02/2001	MAIL NOTICE OF MISSING PARTS CPA			
31	08/02/2001	COMMUNICATION TO APPLICANT FOR MISSING PARTS CPA			
30	08/02/2001	DATE FORWARDED TO EXAMINER			
29	07/27/2001	CONTINUING PROSECUTION APPLICATION - CONTINUATION (ACPA)			
28	07/27/2001	MAIL EXPRESS ABANDONMENT (DURING EXAMINATION)			
27	07/27/2001	EXPRESS ABANDONMENT (DURING EXAMINATION)			
26	07/27/2001	REQUEST FOR EXTENSION OF TIME - GRANTED			

Search Another: Application# Search

EXPLANATION OF PTA CALCULATION

EXPLANATION OF PTE CALCULATION

To go back use Back button on your browser toolbar.

Back to PALM | ASSIGNMENT | OASIS | Home page

UNITED STATES PATENT AND TRADEMARK OFFICE

CERTIFICATE OF CORRECTION

PATENT : 6,838,273 B2

DATED : January 4, 2005

INVENTOR(S) : Suerbaum et al.

DRAFT

It is certified that error appears in the above-identified patent and that said Letters Patent is hereby corrected as shown below:

On the cover page,

[*] Notice: Subject to any disclaimer, the term of this patent is extended or adjusted under 35 USC 154(b) by (184) days

Delete the phrase "by 184" and insert – by 68 days--

UNITED STATES DEPARTMENT OF COMMERCE
Patent and Trademark Office
ASSISTANT SECRETARY AND COMMISSIONER
OF PATENTS AND TRADEMARKS
Washington, D.C. 20231

COPY MAILED

Paper No. 18

FEB 2 2 2000

SPECIAL PROGRAMS OFFICE
DAC FOR PATENTS

Aleksandr L. Yufa
698 Cypress Ave.
Colton, CA 92324-1952

In re Application of
Aleksandr L. Yufa
Application No. 09/015,458
Filed: January 29, 1998
For: METHOD FOR WIRELESS COMMUNICATING APPARATUS FOR PRECISE ANALYZING OF ENVIRONMENT

: DECISION DISMISSING REQUEST FOR RECONSIDERATION AND DECISION GRANTING PETITION TO ACCORD THE APPLICATION A FILING DATE

This is a decision on the request for reconsideration of the petition to expedite the petition filed on November 8, 1999, and the petition to accord the continuation application papers a filing date of April 28, 1999 under 37 CFR 1.53(d).

On January 29, 1998, Petitioner filed prior application 09/015,458.

On April 28, 1999, Petitioner filed a request under former 37 CFR 1.62 for a file wrapper continuation of prior application No. 09/015,458.

On June 10, 1999, Technology Center 2800 mailed a Notice of Improper Application (Notice) which indicated the request under former 37 CFR 1.62 was being treated as a continued prosecution application under 37 CFR 1.53(d) (CPA). The Notice also indicated that the prior application was not a complete application filed on or after June 8, 1995, and thus the application could not be accepted as a proper CPA.

On June 21, 1999, a petition and a petition fee were filed. Petitioner requests that the request for a file wrapper continuation under former 37 CFR 1.62 be treated as an application for continued prosecution under 37 CFR 1.53(d), with a filing date of April 28, 1998.

On September 7, 1999, Petitioner filed a petition to expedite the consideration of the prior petition to accept a continuing prosecution application.

On October 28, 1999, the petition to expedite the petition was dismissed.

In response, on November 8, 1999, the present request for reconsideration of the petition to expedite the petition was filed, noting that prior application 09/015,458 had previously been made special pursuant to 37 CFR 1.102(c) and thus treatment of the June 21, 1999, petition should be expedited.

The request for reconsideration of the petition to expedite the petition is dismissed as moot in view of the petition now being before the deciding Official for action on the merits.

A review of the record reveals that the request for file-wrapper continuation application under former 37 CFR 1.62 as treated as a request for CPA met the requirements of 37 CFR 1.53(d). Thus, the CPA application papers have been accorded a filing date of April 28, 1999 (as a CPA of application 09/015,458 filed January 28, 1998).

The petition is granted.

The Notice of Improper Application mailed June 10, 1999, was sent in error and is hereby vacated.

The preliminary amendment to the specification filed April 28, 1999, will be entered in due course and must be considered by the examiner for entry of new matter not described in the application as filed. 35 USC 112, first paragraph; 35 USC 132.

The petition fee of $130.00 accompanying the petition to accept a continuing prosecution application was not necessary and has been scheduled for refund.

The application has been forwarded to Technology Center 2800 for processing as a CPA with a filing date of April 28, 1999, of prior application 09/015,458.

Any inquiry directed to this matter should be directed to Robert Clarke at (703) 305-9177.

Fred A. Silverberg

Fred Silverberg
Senior Legal Advisor
Special Program Law Office
Office of the Deputy Assistant Commissioner
for Patent Policy and Projects

RC rc

UNITED STATES PATENT AND TRADEMARK OFFICE

COMMISSIONER FOR PATENTS
UNITED STATES PATENT AND TRADEMARK OFFICE
P.O. BOX 1450
ALEXANDRIA, VA 22313-1450
WWW.USPTO.GOV

Paper No. 31

ARNOLD B SILVERMAN
ECKERT SEAMANS CHERIN & MELLOTT
600 GRANT ST 42ND FL
PITTSBURGH PA 15219

COPY MAILED

MAY 13 2003

OFFICE OF PETITIONS

In re Application of
Howard M. Kingston
Application No. 09/015,469
Filed: January 29, 1998
Attorney Docket No. 04945000095

DECISION ON PETITION

This is a decision on the petition filed on November 7, 2002, pursuant to 37 CFR 1.137(b), to revive the above-identified application.

The petition is **GRANTED**.

The above-identified application became abandoned for failure to timely file a proper reply to the final Office action mailed October 3, 2000. This Office action set a shortened statutory period for reply of three months. On April 3, 2001, applicant replied with a Continued Prosecution Application (CPA). However, as there was already an earlier filed CPA, filed on or after May 22, 2000, the CPA was not proper[1]. Accordingly, the above-identified application became abandoned on April 4, 2001. However, prosecution in the application continued, until a Notice of Abandonment was mailed on November 7, 2002.

With the instant petition, petitioner paid the petition fee and made the proper statement of unintentional delay. The required reply in the form of a Request for Continued Examination (RCE) was previously filed on June 17, 2002.

The application file is being forwarded to Technology Center 1700 for processing of the RCE, filed June 17, 2002.

Telephone inquiries concerning this decision should be directed to the undersigned at (703)305-0272.

Cliff Congo
Petitions Attorney
Office of Petitions

---

[1] Applicant filed an earlier CPA on August 22, 2000.

UNITED STATES PATENT AND TRADEMARK OFFICE

COMMISSIONER FOR PATENTS
UNITED STATES PATENT AND TRADEMARK OFFICE
WASHINGTON, D.C. 20231
www.uspto.gov

Paper No. 19

CAROL A LEWIS
W L GORE & ASSOCIATES INC
551 PAPER MILL ROAD
P O BOX 9206
NEWARK, DE 19714-9206

COPY MAILED

SEP 3 0 2002

OFFICE OF PETITIONS

In re Application of	:	
Jean Norvell et al	:	
Application No. 09/015,616	:	ON PETITION
Filed: January 29, 1998	:	
Attorney Docket No. FA/141A	:	

This is a decision on the petition under 37 CFR 1.137(b), filed August 21, 2002, to revive the above-identified application.

The petition is **GRANTED**.

The above-identified application became abandoned for failure to reply within the meaning of 37 CFR 1.113 in a timely manner to the final Office action mailed February 27, 2001, which set a shortened statutory period for reply of three (3) months. No extensions of time under the provisions of 37 CFR 1.136(a) were obtained. Accordingly, the above-identified application became abandoned on May 28, 2001.

The above-identified application is being revived solely for purposes of continuity with a Request for Continued Examination (RCE) filed on August 21, 2002.

Telephone inquiries concerning this decision should be directed to Wan Laymon at (703) 305-9282.

The application file is being forwarded to Technology Center AU 1771.

Wan Laymon
Wan Laymon
Petitions Examiner
Office of Petitions
Office of the Deputy Commissioner
for Patent Examination Policy

UNITED STATES PATENT AND TRADEMARK OFFICE

Commissioner for Patents
United States Patent and Trademark Office
P.O. Box 1450
Alexandria, VA 22313-1450
www.uspto.gov

In re Patent No. 6154757
Issue Date: November 28,2000
Application No. 09015660
Filed: January 29,1998
Attorney Docket No.

:
:DECISION GRANTING PETITION
:UNDER 37 CFR 1.378(c)
:

This is a decision on the electronic petition, filed April 27,2009 ,under 37 CFR 1.378(c) to accept the unintentionally delayed payment of the 7.5 year maintenance fee for the above-identified patent.

The petition is **GRANTED**.

The maintenance fee is accepted, and the above-identified patent reinstated as of April 27,2009 .
This decision also constitutes notice that the fee has been accepted. An electronic copy of the petition and this decision has been created as an entry in the Image File Wrapper. Nevertheless, petitioner should print and retain an independent copy.

Telephone inquiries related to this electronic decision should be directed to the Electronic Business Center at 1-866-217-9197.

PTO/SB/66 (03-09)
Approved for use through 03/31/2012. OMB 0651-0016
U.S. Patent and Trademark Office: U.S. DEPARTMENT OF COMMERCE
Under the Paperwork Reduction Act of 1995, no persons are required to respond to a collection of information unless it displays valid OMB control number.

PETITION TO ACCEPT UNINTENTIONALLY DELAYED PAYMENT OF MAINTENANCE FEE IN AN EXPIRED PATENT (37 CFR 1.378(c))

Patent Number	Issue Date (YYYY-MM-DD)	Application Number	Filing Date (YYYY-MM-DD)	Docket Number (if applicable)
6154757	2000-11-28	09015660	1998-01-29	

CAUTION: Maintenance fee (and surcharge, if any) payment must correctly identify: (1) the patent number and (2) the application number of the actual U.S. application leading to issuance of that patent to ensure the fee(s) is/are associated with the correct patent. 37 CFR 1.366(c) and (d).

SMALL ENTITY
☒ Patentee claims, or has previously claimed, small entity status. See 37 CFR 1.27.

LOSS OF ENTITLEMENT TO SMALL ENTITY STATUS
☐ Patentee is no longer entitled to small entity status. See 37 CFR 1.27(g)

NOT Small Entity		Small Entity	
Fee	Code	Fee	Code
○ 3 ½ year	(1551)	○ 3 ½ year	(2551)
○ 7 ½ year	(1552)	◉ 7 ½ year	(2552)
○ 11 ½ year	(1553)	○ 11 ½ year	(2553)

SURCHARGE
The surcharge required by 37 CFR 1.20(i)(2) (Fee Code 1558) must be paid as a condition of accepting unintentionally delayed payment of the maintenance fee.

MAINTENANCE FEE (37 CFR 1.20(e)-(g))
The appropriate maintenance fee must be submitted with this petition.

STATEMENT
THE UNDERSIGNED CERTIFIES THAT THE DELAY IN PAYMENT OF THE MAINTENANCE FEE TO THIS PATENT WAS UNINTENTIONAL

PETITIONER(S) REQUEST THAT THE DELAYED PAYMENT OF THE MAINTENANCE FEE BE ACCEPTED AND THE PATENT REINSTATED

THIS PORTION MUST BE COMPLETED BY THE SIGNATORY OR SIGNATORIES

37 CFR 1.378(d) states: "Any petition under this section must be signed by an attorney or agent registered to practice before the Patent and Trademark Office, or by the patentee, the assignee, or other party in interest."

I certify, in accordance with 37 CFR 1.4(d)(4) that I am

○ An attorney or agent registered to practice before the Patent and Trademark Office

○ A sole patentee

◉ A joint patentee; I certify that I am authorized to sign this submission on behalf of all the other patentees.

○ A joint patentee; all of whom are signing this e-petition

○ The assignee of record of the entire interest

A Joint Patentee and I certify that I am authorized to sign this submission on behalf of all the other patentees			
A signature of the applicant or representative is required in accordance with 37 CFR 1.33 and 10.18. Please see 37 CFR 1.4(d) for the form of the signature.			
Signature	/Philip R. Krause/	Date (YYYY-MM-DD)	2009-04-27
Name	Philip R. Krause		

This collection of information is required by 37 CFR 1.378(c). The information is required to obtain or retain a benefit by the public which is to file (and by the USPTO to process) an application. Confidentiality is governed by 35 U.S.C. 122 and 37 CFR 1.11 and 1.14. This collection is estimated to take 1 hour to complete, including gathering, preparing, and submitting the completed application form to the USPTO. Time will vary depending upon the individual case. Any comments on the amount of time you require to complete this form and/ or suggestions for reducing this burden, should be sent to the Chief Information Officer, U.S. Patent and Trademark Office, U.S. Department of Commerce, P.O. Box 1450, Alexandria, VA 22313-1450. DO NOT SEND FEES OR COMPLETED FORMS TO THIS ADDRESS. **This form can only be used when in conjunction with EFS-Web. If this form is mailed to the USPTO, it may cause delays in reinstating the patent.**

Privacy Act Statement

The Privacy Act of 1974 (P.L. 93-579) requires that you be given certain information in connection with your submission of the attached form related to a patent application or patent. Accordingly, pursuant to the requirements of the Act, please be advised that: (1) the general authority for the collection of this information is 35 U.S.C. 2(b)(2); (2) furnishing of the information solicited is voluntary; and (3) the principal purpose for which the information is used by the U.S. Patent and Trademark Office is to process and/or examine your submission related to a patent application or patent. If you do not furnish the requested information, the U.S. Patent and Trademark Office may not be able to process and/or examine your submission, which may result in termination of proceedings or abandonment of the application or expiration of the patent.

The information provided by you in this form will be subject to the following routine uses:

1. The information on this form will be treated confidentially to the extent allowed under the Freedom of Information Act (5 U.S.C. 552) and the Privacy Act (5 U.S.C. 552a). Records from this system of records may be disclosed to the Department of Justice to determine whether the Freedom of Information Act requires disclosure of these records.

2. A record from this system of records may be disclosed, as a routine use, in the course of presenting evidence to a court, magistrate, or administrative tribunal, including disclosures to opposing counsel in the course of settlement negotiations.

3. A record in this system of records may be disclosed, as a routine use, to a Member of Congress submitting a request involving an individual, to whom the record pertains, when the individual has requested assistance from the Member with respect to the subject matter of the record.

4. A record in this system of records may be disclosed, as a routine use, to a contractor of the Agency having need for the information in order to perform a contract. Recipients of information shall be required to comply with the requirements of the Privacy Act of 1974, as amended, pursuant to 5 U.S.C. 552a(m).

5. A record related to an International Application filed under the Patent Cooperation Treaty in this system of records may be disclosed, as a routine use, to the International Bureau of the World Intellectual Property Organization, pursuant to the Patent Cooperation Treaty.

6. A record in this system of records may be disclosed, as a routine use, to another federal agency for purposes of National Security review (35 U.S.C. 181) and for review pursuant to the Atomic Energy Act (42 U.S.C. 218(c)).

7. A record from this system of records may be disclosed, as a routine use, to the Administrator, General Services, or his/her designee, during an inspection of records conducted by GSA as part of that agency's responsibility to recommend improvements in records management practices and programs, under authority of 44 U.S.C. 2904 and 2906. Such disclosure shall be made in accordance with the GSA regulations governing inspection of records for this purpose, and any other relevant (i.e., GSA or Commerce) directive. Such disclosure shall not be used to make determinations about individuals.

8. A record from this system of records may be disclosed, as a routine use, to the public after either publication of the application pursuant to 35 U.S.C. 122(b) or issuance of a patent pursuant to 35 U.S.C. 151. Further, a record may be disclosed, subject to the limitations of 37 CFR 1.14, as a routine use, to the public if the record was filed in an application which became abandoned or in which the proceedings were terminated and which application is referenced by either a published application, an application open to public inspections or an issued patent.

9. A record from this system of records may be disclosed, as a routine use, to a Federal, State, or local law enforcement agency, if the USPTO becomes aware of a violation or potential violation of law or regulation.

PTO/SB/66 (03-09)
Approved for use through 03/31/2012. OMB 0651-0016
U.S. Patent and Trademark Office: U.S. DEPARTMENT OF COMMERCE
Under the Paperwork Reduction Act of 1995, no persons are required to respond to a collection of information unless it displays valid OMB control number.

PETITION TO ACCEPT UNINTENTIONALLY DELAYED PAYMENT OF MAINTENANCE FEE IN AN EXPIRED PATENT (37 CFR 1.378(c))

Patent Number	Issue Date (YYYY-MM-DD)	Application Number	Filing Date (YYYY-MM-DD)	Docket Number (if applicable)
6,068,197	2000-05-30	09/016,218	1998-01-30	5359-00100

CAUTION: Maintenance fee (and surcharge, if any) payment must correctly identify: (1) the patent number and (2) the application number of the actual U.S. application leading to issuance of that patent to ensure the fee(s) is/are associated with the correct patent. 37 CFR 1.366(c) and (d).

SMALL ENTITY
☒ Patentee claims, or has previously claimed, small entity status. See 37 CFR 1.27.

LOSS OF ENTITLEMENT TO SMALL ENTITY STATUS
☐ Patentee is no longer entitled to small entity status. See 37 CFR 1.27(g)

NOT Small Entity		Small Entity	
Fee	Code	Fee	Code
○ 3 ½ year	(1551)	○ 3 ½ year	(2551)
○ 7 ½ year	(1552)	◉ 7 ½ year	(2552)
○ 11 ½ year	(1553)	○ 11 ½ year	(2553)

SURCHARGE
The surcharge required by 37 CFR 1.20(i)(2) (Fee Code 1558) must be paid as a condition of accepting unintentionally delayed payment of the maintenance fee.

MAINTENANCE FEE (37 CFR 1.20(e)-(g))
The appropriate maintenance fee must be submitted with this petition.

STATEMENT
THE UNDERSIGNED CERTIFIES THAT THE DELAY IN PAYMENT OF THE MAINTENANCE FEE TO THIS PATENT WAS UNINTENTIONAL

PETITIONER(S) REQUEST THAT THE DELAYED PAYMENT OF THE MAINTENANCE FEE BE ACCEPTED AND THE PATENT REINSTATED

THIS PORTION MUST BE COMPLETED BY THE SIGNATORY OR SIGNATORIES

37 CFR 1.378(d) states: "Any petition under this section must be signed by an attorney or agent registered to practice before the Patent and Trademark Office, or by the patentee, the assignee, or other party in interest."

I certify, in accordance with 37 CFR 1.4(d)(4) that I am

◉ An attorney or agent registered to practice before the Patent and Trademark Office

○ A sole patentee

○ A joint patentee; I certify that I am authorized to sign this submission on behalf of all the other patentees.

○ A joint patentee; all of whom are signing this e-petition

○ The assignee of record of the entire interest

Patent Practitioner			
A signature of the applicant or representative is required in accordance with 37 CFR 1.33 and 10.18. Please see 37 CFR 1.4(d) for the form of the signature			
Signature	/Jeffrey C. Hood/	Date (YYYY-MM-DD)	2010-05-24
Name	Jeffrey C. Hood	Registration Number	35198

This collection of information is required by 37 CFR 1.378(c). The information is required to obtain or retain a benefit by the public which is to file (and by the USPTO to process) an application. Confidentiality is governed by 35 U.S.C. 122 and 37 CFR 1.11 and 1.14. This collection is estimated to take 1 hour to complete, including gathering, preparing, and submitting the completed application form to the USPTO. Time will vary depending upon the individual case. Any comments on the amount of time you require to complete this form and/ or suggestions for reducing this burden, should be sent to the Chief Information Officer, U.S. Patent and Trademark Office, U.S. Department of Commerce, P.O. Box 1450, Alexandria, VA 22313-1450. DO NOT SEND FEES OR COMPLETED FORMS TO THIS ADDRESS. **This form can only be used when in conjunction with EFS-Web. If this form is mailed to the USPTO, it may cause delays in reinstating the patent.**

Privacy Act Statement

The Privacy Act of 1974 (P.L. 93-579) requires that you be given certain information in connection with your submission of the attached form related to a patent application or patent. Accordingly, pursuant to the requirements of the Act, please be advised that: (1) the general authority for the collection of this information is 35 U.S.C. 2(b)(2); (2) furnishing of the information solicited is voluntary; and (3) the principal purpose for which the information is used by the U.S. Patent and Trademark Office is to process and/or examine your submission related to a patent application or patent. If you do not furnish the requested information, the U.S. Patent and Trademark Office may not be able to process and/or examine your submission, which may result in termination of proceedings or abandonment of the application or expiration of the patent.

The information provided by you in this form will be subject to the following routine uses:

1. The information on this form will be treated confidentially to the extent allowed under the Freedom of Information Act (5 U.S.C. 552) and the Privacy Act (5 U.S.C. 552a). Records from this system of records may be disclosed to the Department of Justice to determine whether the Freedom of Information Act requires disclosure of these records.

2. A record from this system of records may be disclosed, as a routine use, in the course of presenting evidence to a court, magistrate, or administrative tribunal, including disclosures to opposing counsel in the course of settlement negotiations.

3. A record in this system of records may be disclosed, as a routine use, to a Member of Congress submitting a request involving an individual, to whom the record pertains, when the individual has requested assistance from the Member with respect to the subject matter of the record.

4. A record in this system of records may be disclosed, as a routine use, to a contractor of the Agency having need for the information in order to perform a contract. Recipients of information shall be required to comply with the requirements of the Privacy Act of 1974, as amended, pursuant to 5 U.S.C. 552a(m).

5. A record related to an International Application filed under the Patent Cooperation Treaty in this system of records may be disclosed, as a routine use, to the International Bureau of the World Intellectual Property Organization, pursuant to the Patent Cooperation Treaty.

6. A record in this system of records may be disclosed, as a routine use, to another federal agency for purposes of National Security review (35 U.S.C. 181) and for review pursuant to the Atomic Energy Act (42 U.S.C. 218(c)).

7. A record from this system of records may be disclosed, as a routine use, to the Administrator, General Services, or his/her designee, during an inspection of records conducted by GSA as part of that agency's responsibility to recommend improvements in records management practices and programs, under authority of 44 U.S.C. 2904 and 2906. Such disclosure shall be made in accordance with the GSA regulations governing inspection of records for this purpose, and any other relevant (i.e., GSA or Commerce) directive. Such disclosure shall not be used to make determinations about individuals.

8. A record from this system of records may be disclosed, as a routine use, to the public after either publication of the application pursuant to 35 U.S.C. 122(b) or issuance of a patent pursuant to 35 U.S.C. 151. Further, a record may be disclosed, subject to the limitations of 37 CFR 1.14, as a routine use, to the public if the record was filed in an application which became abandoned or in which the proceedings were terminated and which application is referenced by either a published application, an application open to public inspections or an issued patent.

9. A record from this system of records may be disclosed, as a routine use, to a Federal, State, or local law enforcement agency, if the USPTO becomes aware of a violation or potential violation of law or regulation.

UNITED STATES PATENT AND TRADEMARK OFFICE

Commissioner for Patents
United States Patent and Trademark Office
P.O. Box 1450
Alexandria, VA 22313-1450
www.uspto.gov

In re Patent No. 6068197
Issue Date: May 30,2000
Application No. 09016218
Filed: January 30,1998
Attorney Docket No. 5359-00100

:DECISION GRANTING PETITION
:UNDER 37 CFR 1.378(c)

This is a decision on the electronic petition, filed May 24,2010 ,under 37 CFR 1.378(c) to accept the unintentionally delayed payment of the 7.5 year maintenance fee for the above-identified patent.

The petition is **GRANTED**.

The maintenance fee is accepted, and the above-identified patent reinstated as of May 24,2010 .
This decision also constitutes notice that the fee has been accepted. An electronic copy of the petition and this decision has been created as an entry in the Image File Wrapper. Nevertheless, petitioner should print and retain an independent copy.

Telephone inquiries related to this electronic decision should be directed to the Electronic Business Center at 1-866-217-9197.

PTO/SB/66 (03-09)
Approved for use through 03/31/2012. OMB 0651-0016
U.S. Patent and Trademark Office: U.S. DEPARTMENT OF COMMERCE
Under the Paperwork Reduction Act of 1995, no persons are required to respond to a collection of information unless it displays valid OMB control number.

PETITION TO ACCEPT UNINTENTIONALLY DELAYED PAYMENT OF MAINTENANCE FEE IN AN EXPIRED PATENT (37 CFR 1.378(c))

Patent Number	Issue Date (YYYY-MM-DD)	Application Number	Filing Date (YYYY-MM-DD)	Docket Number (if applicable)
6134312	2000-10-17	09016673	1998-01-30	SHAP.6870-NY

CAUTION: Maintenance fee (and surcharge, if any) payment must correctly identify: (1) the patent number and (2) the application number of the actual U.S. application leading to issuance of that patent to ensure the fee(s) is/are associated with the correct patent. 37 CFR 1.366(c) and (d).

SMALL ENTITY
☒ Patentee claims, or has previously claimed, small entity status. See 37 CFR 1.27.

LOSS OF ENTITLEMENT TO SMALL ENTITY STATUS
☐ Patentee is no longer entitled to small entity status. See 37 CFR 1.27(g)

NOT Small Entity		Small Entity	
Fee	Code	Fee	Code
○ 3 ½ year	(1551)	○ 3 ½ year	(2551)
○ 7 ½ year	(1552)	◉ 7 ½ year	(2552)
○ 11 ½ year	(1553)	○ 11 ½ year	(2553)

SURCHARGE
The surcharge required by 37 CFR 1.20(i)(2) (Fee Code 1558) must be paid as a condition of accepting unintentionally delayed payment of the maintenance fee.

MAINTENANCE FEE (37 CFR 1.20(e)-(g))
The appropriate maintenance fee must be submitted with this petition.

STATEMENT
THE UNDERSIGNED CERTIFIES THAT THE DELAY IN PAYMENT OF THE MAINTENANCE FEE TO THIS PATENT WAS UNINTENTIONAL

PETITIONER(S) REQUEST THAT THE DELAYED PAYMENT OF THE MAINTENANCE FEE BE ACCEPTED AND THE PATENT REINSTATED

THIS PORTION MUST BE COMPLETED BY THE SIGNATORY OR SIGNATORIES

37 CFR 1.378(d) states: "Any petition under this section must be signed by an attorney or agent registered to practice before the Patent and Trademark Office, or by the patentee, the assignee, or other party in interest."

I certify, in accordance with 37 CFR 1.4(d)(4) that I am

◉ An attorney or agent registered to practice before the Patent and Trademark Office

○ A sole patentee

○ A joint patentee; I certify that I am authorized to sign this submission on behalf of all the other patentees.

○ A joint patentee; all of whom are signing this e-petition

○ The assignee of record of the entire interest

Patent Practitioner			
A signature of the applicant or representative is required in accordance with 37 CFR 1.33 and 10.18. Please see 37 CFR 1.4(d) for the form of the signature			
Signature	/Arlen L. Olsen/	Date (YYYY-MM-DD)	2010-06-17
Name	Arlen L. Olsen	Registration Number	37543

This collection of information is required by 37 CFR 1.378(c). The information is required to obtain or retain a benefit by the public which is to file (and by the USPTO to process) an application. Confidentiality is governed by 35 U.S.C. 122 and 37 CFR 1.11 and 1.14. This collection is estimated to take 1 hour to complete, including gathering, preparing, and submitting the completed application form to the USPTO. Time will vary depending upon the individual case. Any comments on the amount of time you require to complete this form and/ or suggestions for reducing this burden, should be sent to the Chief Information Officer, U.S. Patent and Trademark Office, U.S. Department of Commerce, P.O. Box 1450, Alexandria, VA 22313-1450. DO NOT SEND FEES OR COMPLETED FORMS TO THIS ADDRESS. **This form can only be used when in conjunction with EFS-Web. If this form is mailed to the USPTO, it may cause delays in reinstating the patent.**

Privacy Act Statement

The Privacy Act of 1974 (P.L. 93-579) requires that you be given certain information in connection with your submission of the attached form related to a patent application or patent. Accordingly, pursuant to the requirements of the Act, please be advised that: (1) the general authority for the collection of this information is 35 U.S.C. 2(b)(2); (2) furnishing of the information solicited is voluntary; and (3) the principal purpose for which the information is used by the U.S. Patent and Trademark Office is to process and/or examine your submission related to a patent application or patent. If you do not furnish the requested information, the U.S. Patent and Trademark Office may not be able to process and/or examine your submission, which may result in termination of proceedings or abandonment of the application or expiration of the patent.

The information provided by you in this form will be subject to the following routine uses:

1. The information on this form will be treated confidentially to the extent allowed under the Freedom of Information Act (5 U.S.C. 552) and the Privacy Act (5 U.S.C. 552a). Records from this system of records may be disclosed to the Department of Justice to determine whether the Freedom of Information Act requires disclosure of these records.

2. A record from this system of records may be disclosed, as a routine use, in the course of presenting evidence to a court, magistrate, or administrative tribunal, including disclosures to opposing counsel in the course of settlement negotiations.

3. A record in this system of records may be disclosed, as a routine use, to a Member of Congress submitting a request involving an individual, to whom the record pertains, when the individual has requested assistance from the Member with respect to the subject matter of the record.

4. A record in this system of records may be disclosed, as a routine use, to a contractor of the Agency having need for the information in order to perform a contract. Recipients of information shall be required to comply with the requirements of the Privacy Act of 1974, as amended, pursuant to 5 U.S.C. 552a(m).

5. A record related to an International Application filed under the Patent Cooperation Treaty in this system of records may be disclosed, as a routine use, to the International Bureau of the World Intellectual Property Organization, pursuant to the Patent Cooperation Treaty.

6. A record in this system of records may be disclosed, as a routine use, to another federal agency for purposes of National Security review (35 U.S.C. 181) and for review pursuant to the Atomic Energy Act (42 U.S.C. 218(c)).

7. A record from this system of records may be disclosed, as a routine use, to the Administrator, General Services, or his/her designee, during an inspection of records conducted by GSA as part of that agency's responsibility to recommend improvements in records management practices and programs, under authority of 44 U.S.C. 2904 and 2906. Such disclosure shall be made in accordance with the GSA regulations governing inspection of records for this purpose, and any other relevant (i.e., GSA or Commerce) directive. Such disclosure shall not be used to make determinations about individuals.

8. A record from this system of records may be disclosed, as a routine use, to the public after either publication of the application pursuant to 35 U.S.C. 122(b) or issuance of a patent pursuant to 35 U.S.C. 151. Further, a record may be disclosed, subject to the limitations of 37 CFR 1.14, as a routine use, to the public if the record was filed in an application which became abandoned or in which the proceedings were terminated and which application is referenced by either a published application, an application open to public inspections or an issued patent.

9. A record from this system of records may be disclosed, as a routine use, to a Federal, State, or local law enforcement agency, if the USPTO becomes aware of a violation or potential violation of law or regulation.

UNITED STATES PATENT AND TRADEMARK OFFICE

Commissioner for Patents
United States Patent and Trademark Office
P.O. Box 1450
Alexandria, VA 22313-1450
www.uspto.gov

In re Patent No. 6134312
Issue Date: October 17,2000
Application No. 09016673
Filed: January 30,1998
Attorney Docket No. 000

:
:DECISION GRANTING PETITION
:UNDER 37 CFR 1.378(c)
:

This is a decision on the electronic petition, filed June 17,2010 ,under 37 CFR 1.378(c) to accept the unintentionally delayed payment of the 7.5 year maintenance fee for the above-identified patent.

The petition is **GRANTED**.

The maintenance fee is accepted, and the above-identified patent reinstated as of June 17,2010 .
This decision also constitutes notice that the fee has been accepted. An electronic copy of the petition and this decision has been created as an entry in the Image File Wrapper. Nevertheless, petitioner should print and retain an independent copy.

Telephone inquiries related to this electronic decision should be directed to the Electronic Business Center at 1-866-217-9197.

UNITED STATES PATENT AND TRADEMARK OFFICE

COMMISSIONER FOR PATENTS
UNITED STATES PATENT AND TRADEMARK OFFICE
P.O. BOX 1450
ALEXANDRIA, VA 22313-1450
www.uspto.gov

Paper No. 47

CATERPILLAR INC.
100 N.E. ADAMS STREET
PATENT DEPT.
PEORIA, IL 61629-6490

COPY MAILED
MAR 01 2004
OFFICE OF PETITIONS

In re Application of
Godwin et al.
Application No. 09/016,739
Filed: January 30, 1998
Attorney Docket No. 97-679.4

ON PETITION

This is a decision on the petition under 37 C.F.R. § 1.137(b), filed February 17, 2004, to revive the above-identified application.

The petition is **granted.**

This application became abandoned for failure to timely reply within three months to the final Office action mailed November 18, 2002. No extensions of time under the provisions of 37 CFR 1.136(a) were obtained. Accordingly, this application became abandoned on February 19, 2003. A Notice of Abandonment was mailed on July 11, 2003.

Petitioner has met the requirements to revive the above-identified application pursuant to 37 CFR 1.137(b).

The file is now being forwarded to Technology Center 3600 for processing of the Request for Continued Examination under 37 CFR 1.114 filed with the instant petition.

Telephone inquiries should be directed to the undersigned at (703) 306-0482.

Liana Chase
Petitions Examiner
Office of Petitions
Office of the Deputy Commissioner
for Patent Examination Policy

SPE RESPONSE FOR CERTIFICATE OF CORRECTION

DATE : 4/19/07

Paper No.: 16

TO SPE OF : ART UNIT 3723

SUBJECT : Request for Certificate of Correction for Appl. No.: 9/016,823 Patent No.: 6074278

Please respond to this request for a certificate of correction within 7 days.

Please review the requested changes/corrections as shown in the **COCIN** document(s) in the IFW application image. No new matter should be introduced, nor should the scope or meaning of the claims be changed.

Please complete the response (see below) and forward the completed response to scanning using document code **COCX**.

Virginia Tolbert

Certificates of Correction Branch

703-308-9390 ext. 113

Thank You For Your Assistance

The request for issuing the above-identified correction(s) is hereby:

Note your decision on the appropriate box.

- ☑ **Approved** — **All** changes apply.
- ☐ **Approved in Part** — Specify below which changes **do not** apply.
- ☐ **Denied** — State the reasons for denial below.

Comments: _____

SPE

3723
Art Unit

SPE RESPONSE FOR CERTIFICATE OF CORRECTION

Paper No.: _____

DATE : 02/26/10

TO SPE OF : ART UNIT 2857

SUBJECT : Request for Certificate of Correction for Appl. No.: 09017450 Patent No.: 6151564

Please respond to this request for a certificate of correction within 7 days.

FOR IFW FILES:

Please review the requested changes/corrections as shown in the **COCIN** document(s) in the IFW application image. No new matter should be introduced, nor should the scope or meaning of the claims be changed.

Please complete the response (see below) and forward the completed response to scanning using document code **COCX**.

FOR PAPER FILES:

Please review the requested changes/corrections as shown in the attached certificate of correction. Please complete this form (see below) and forward it with the file to:

Certificates of Correction Branch (C of C)
Randolph Square 9D40-E
Palm Location 7580
You can fax the Director's/SPE response to 571-272-9965

Omega Lewis
Certificates of Correction Branch
703-756-1575

Thank You For Your Assistance

The request for issuing the above-identified correction(s) is hereby:
Note your decision on the appropriate box.

- ☒ **Approved** — **All** changes apply.
- ☐ **Approved in Part** — Specify below which changes **do not** apply.
- ☐ **Denied** — State the reasons for denial below.

Comments: _____

ELISEO RAMOS-FELICIANO
~~SUPERVISORY PATENT EXAMINER~~
SPE

2857
Art Unit

PTO/SB/44 (09-07)
Approved for use through 08/31/2010. OMB 0651-0033
U.S. Patent and Trademark Office; U.S. DEPARTMENT OF COMMERCE
Under the Paperwork Reduction Act of 1995, no persons are required to respond to a collection of information unless it displays a valid OMB control number.
(Also Form PTO-1050)

UNITED STATES PATENT AND TRADEMARK OFFICE
CERTIFICATE OF CORRECTION

PATENT NO.	:	6,151,564
APPLICATION NO.	:	09/017,450
ISSUE DATE	:	November 21, 2000
INVENTOR(S)	:	Vescovi et al.

It is certified that an error appears or errors appear in the above-identified patent and that said Letters Patent is hereby corrected as shown below:

On the face page, under field (22), in column 1, insert - - Related U.S. Application Data - -. Insert field (63) - -Continuation-in-part of application No. 08/675,104, filed on Jul. 3, 1996, now Pat. No. 5,953,686, and claims priority to application No. 60/001,875, filed on Aug. 3, 1995- - .

In column 1, line 6, after - -"This application"- - insert- - is a continuation-in-part of application No. 08/675,104, filed on Jul. 3, 1996, now Pat. No. 5,953,686, and- -.

In column 1, line 6, delete "08/675,104 filed Jul. 3, 1995 entitled, "Video Camera Based Computer Input System With Interchangeable Physical Interface by Piernot, et al.," - - and insert - - 60/001,875, filed on Aug. 3, 1995- -, therefor.

MAILING ADDRESS OF SENDER (Please do not use customer number below):
Christopher J. Daley-Watson
PERKINS COIE LLP
P.O. Box 1247
Seattle, Washington 98111-1247

US006151564A

United States Patent [19]

Vescovi et al.

[11] **Patent Number: 6,151,564**

[45] **Date of Patent: Nov. 21, 2000**

[54] **CODED OBJECT SYSTEM AND CODE RECOGNITION METHODS**

[75] Inventors: **Marcos R. Vescovi**; **Philippe P. Piernot**, both of Palo Alto, Calif.

[73] Assignee: **Interval Research Corporation**, Palo Alto, Calif.

[21] Appl. No.: **09/017,450**

[22] Filed: **Feb. 2, 1998**

[51] **Int. Cl.**[7] **G01N 21/00**

[52] **U.S. Cl.** **702/150**; 702/152; 356/348; 348/595; 348/722; 359/568; 359/888

[58] **Field of Search** 702/150, 152; 356/348; 348/595, 722; 359/568, 888

[56] **References Cited**

U.S. PATENT DOCUMENTS

4,062,628	12/1977	Gale	359/568
4,341,385	7/1982	Doyle et al.	273/237
4,843,568	6/1989	Krueger et al.	128/18
5,088,928	2/1992	Chan	434/339
5,245,436	9/1993	Alattar	358/182
5,330,380	7/1994	McDarren et al.	446/397
5,483,261	1/1996	Yasutake .	
5,511,148	4/1996	Wellner	395/106

FOREIGN PATENT DOCUMENTS

91/01543	7/1991	European Pat. Off. .
0576187 A1	6/1992	European Pat. Off. .
0606790A2	7/1994	European Pat. Off. .
2607400	11/1986	France .
3813779A1	11/1989	Germany .
844011	7/1979	U.S.S.R. .
2103943	7/1981	United Kingdom .
2237514	5/1991	United Kingdom .

OTHER PUBLICATIONS

Wellner, Pierre, Mackay, Wendy, Gold, Rich, Guest Editors, "Computer–Augmented Environments: Back to the Real World Introduction", vol. 36, No. 7, Communications of the ACM, Jul. 1993.

Krueger, Myron W., "Environmental Technology: Making the Real World Virtual", vol. 36, No. 7, Communications of the ACM, Jul. 1993.

Fitzmaurice, George W., "Situated Information Spaces and Spatially Aware Palmtop Computers", vol. 36, No. 7, Communications of the ACM, Jul. 1993.

Azuma, Ronald, "Tracking Requirements for Augmented Reality", vol. 36, No. 7, Communications of the ACM, Jul. 1993.

Feiner, Steven, MacIntyre, Blair, and Seligmann, Dorée "Knowledge–Based Augmented Reality", vol. 36, No. 7, Communications of the ACM, Jul. 1993.

Resnick, Mitchel, "Behavior Construction Kits", vol. 36, No. 7, Communications of the ACM, Jul. 1993.

Weiser, Mark, "Some Computer Science Issues in Ubiquitous Computing", vol. 36 No. 7, Communications of the ACM, Jul. 1993.

Elrod, Scott, Hall, Gene, Constanza, Rick, Dixon, Michael, and des Riviéres, jim, "Responsive Office Environments", vol. 36, No. 7, Communications of the ACM, Jul. 1993.

Wellner, Pierre, "Interacting with Paper on the DigitalDesk", vol. 36, No. 7, Communications of the ACM, Jul. 1993.

Mackay, Wendy, Velay, Gilles, Carter, Kathy, Ma, Chaoying, and Pagani, Daniele, "Augmenting Reality: Adding Computational Dimensions to Paper", vol. 36, No. 7, Communications of the ACM, Jul. 1993.

Primary Examiner—Kamini Shah
Attorney, Agent, or Firm—Beyer Weaver & Thomas, LLP

[57] **ABSTRACT**

Disclosed is a method of characterizing a coded object having a plurality of regions. A luminosity value of a first region of the coded object is compared to a luminosity value of a second region of the coded object, wherein the second region's color is known. The first region's color is then determined based on the comparison of the first and second region's luminosity values. In one aspect, the second region's color is known to be white. It is determined that the first region's color is white when the first region's luminosity value is not less than the second region's luminosity value by more than a predetermined constant k, and it is determined that the first region's color is black when the first region's luminosity value is less than the second region's luminosity value by more than a predetermined value. Various coded object configurations are also disclosed.

32 Claims, 15 Drawing Sheets

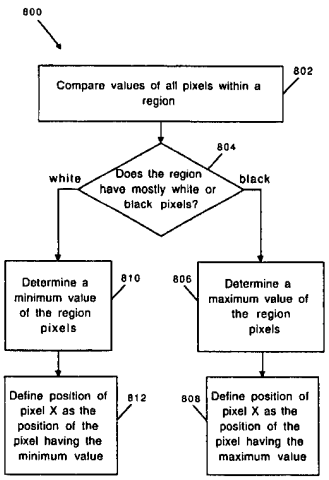

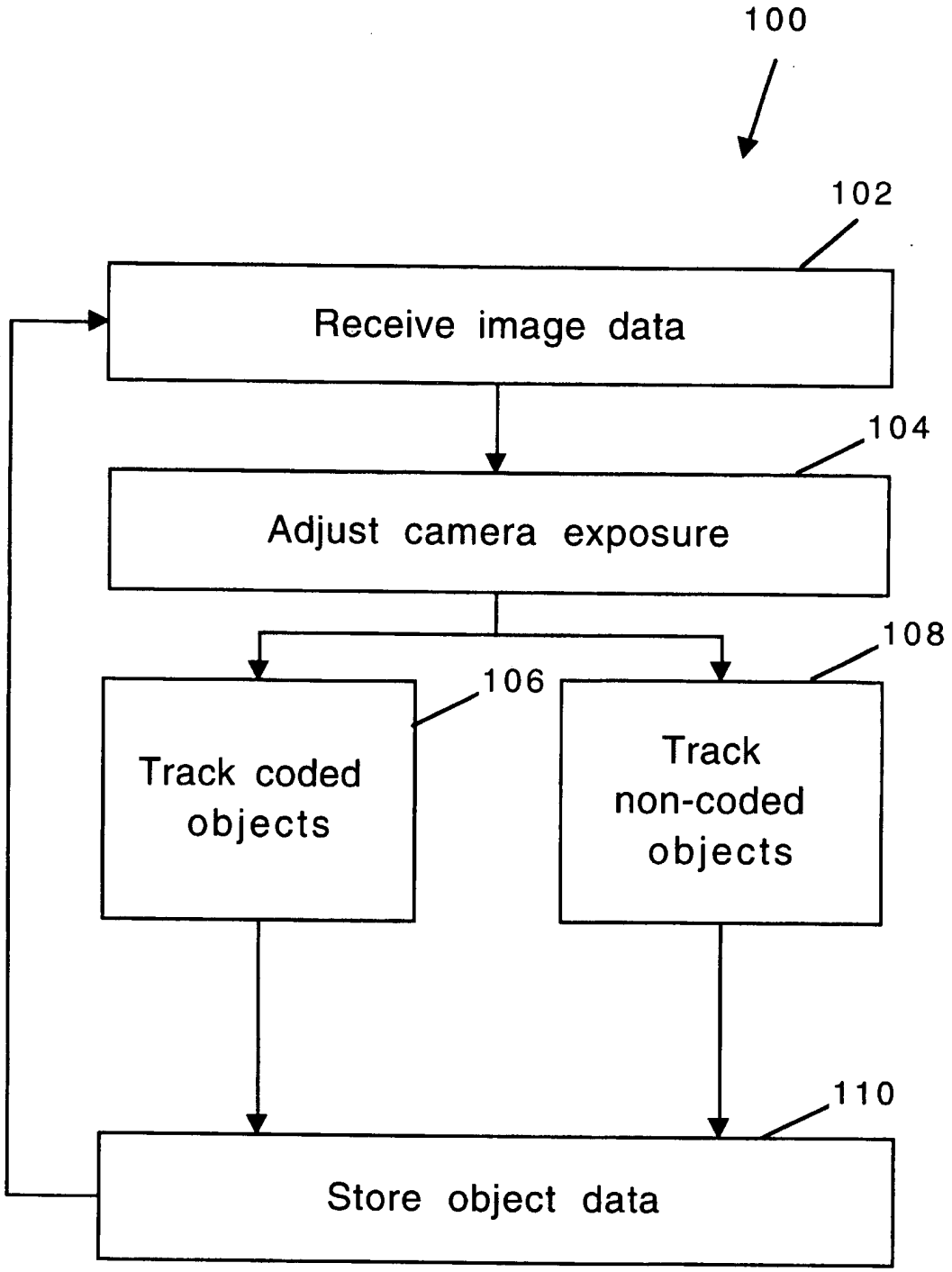
100
102
Receive image data
104
Adjust camera exposure
108
106
Track coded objects
Track non-coded objects
110
Store object data

FIGURE 1

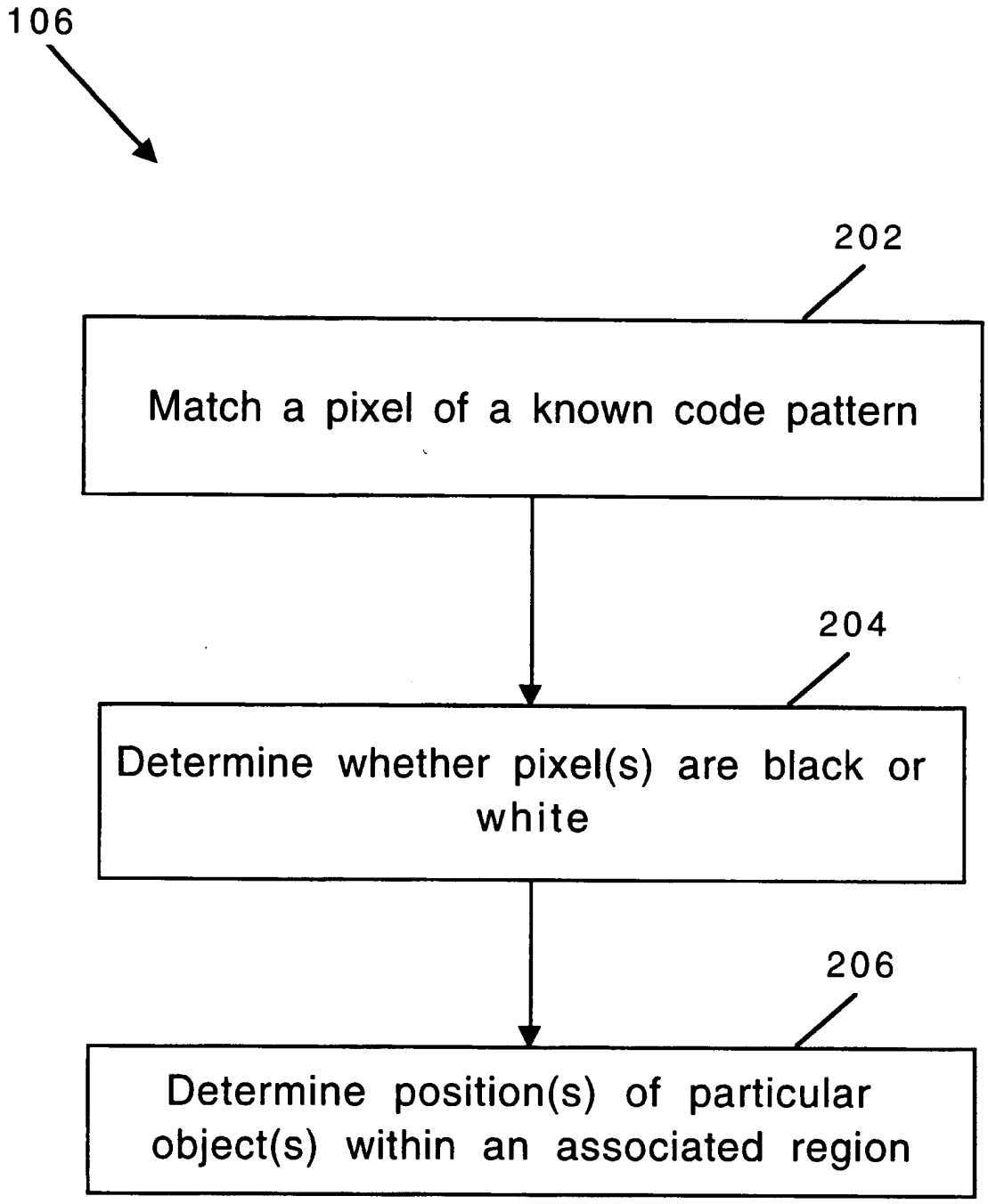
106
202
Match a pixel of a known code pattern
204
Determine whether pixel(s) are black or white
206
Determine position(s) of particular object(s) within an associated region

FIGURE 2

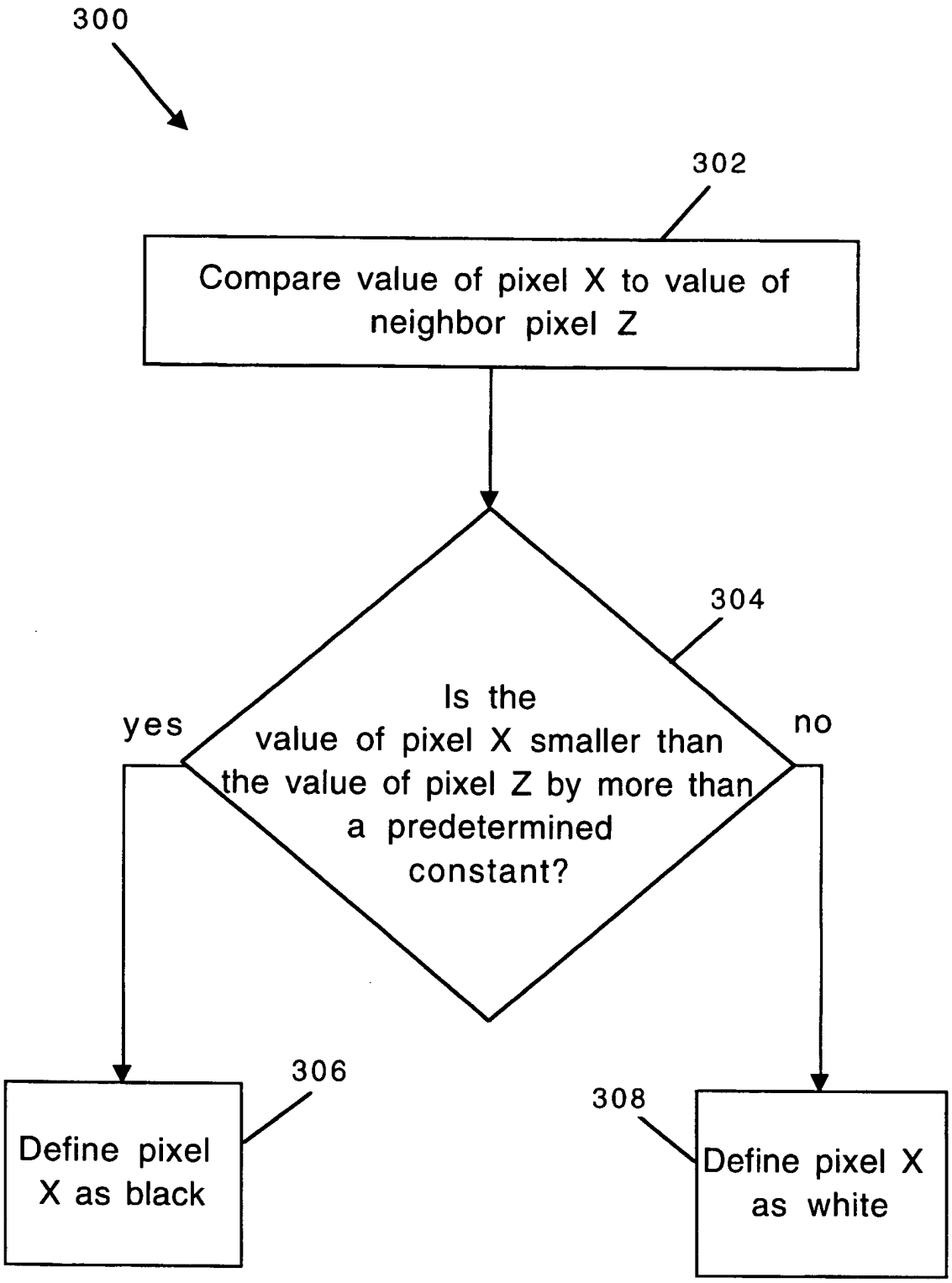
300
302
Compare value of pixel X to value of neighbor pixel Z
304
Is the value of pixel X smaller than the value of pixel Z by more than a predetermined constant?
yes
no
306
Define pixel X as black
308
Define pixel X as white

FIGURE 3

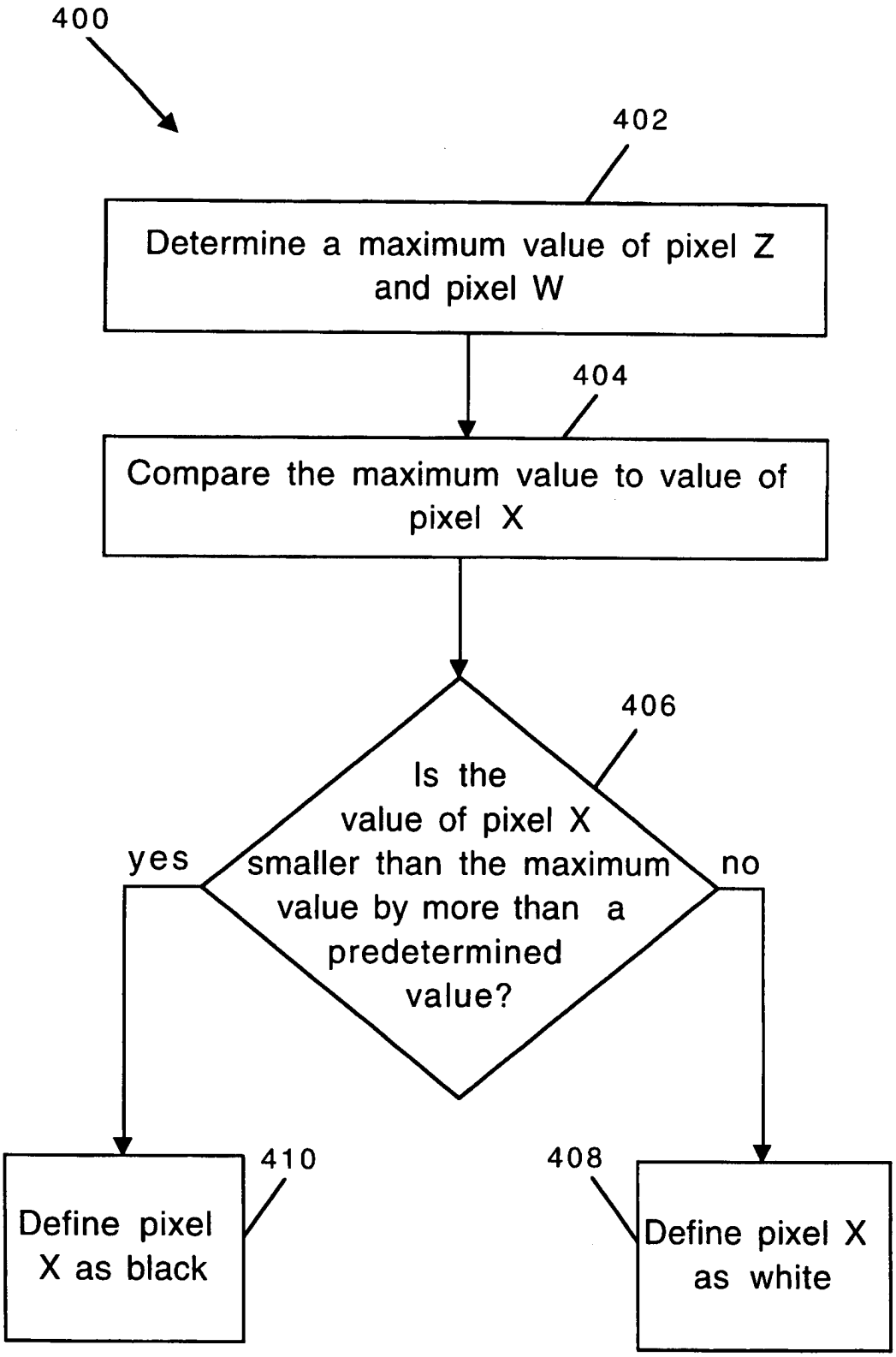
400
402
Determine a maximum value of pixel Z and pixel W
404
Compare the maximum value to value of pixel X
406
Is the value of pixel X smaller than the maximum value by more than a predetermined value?
yes
no
410
Define pixel X as black
408
Define pixel X as white

FIGURE 4

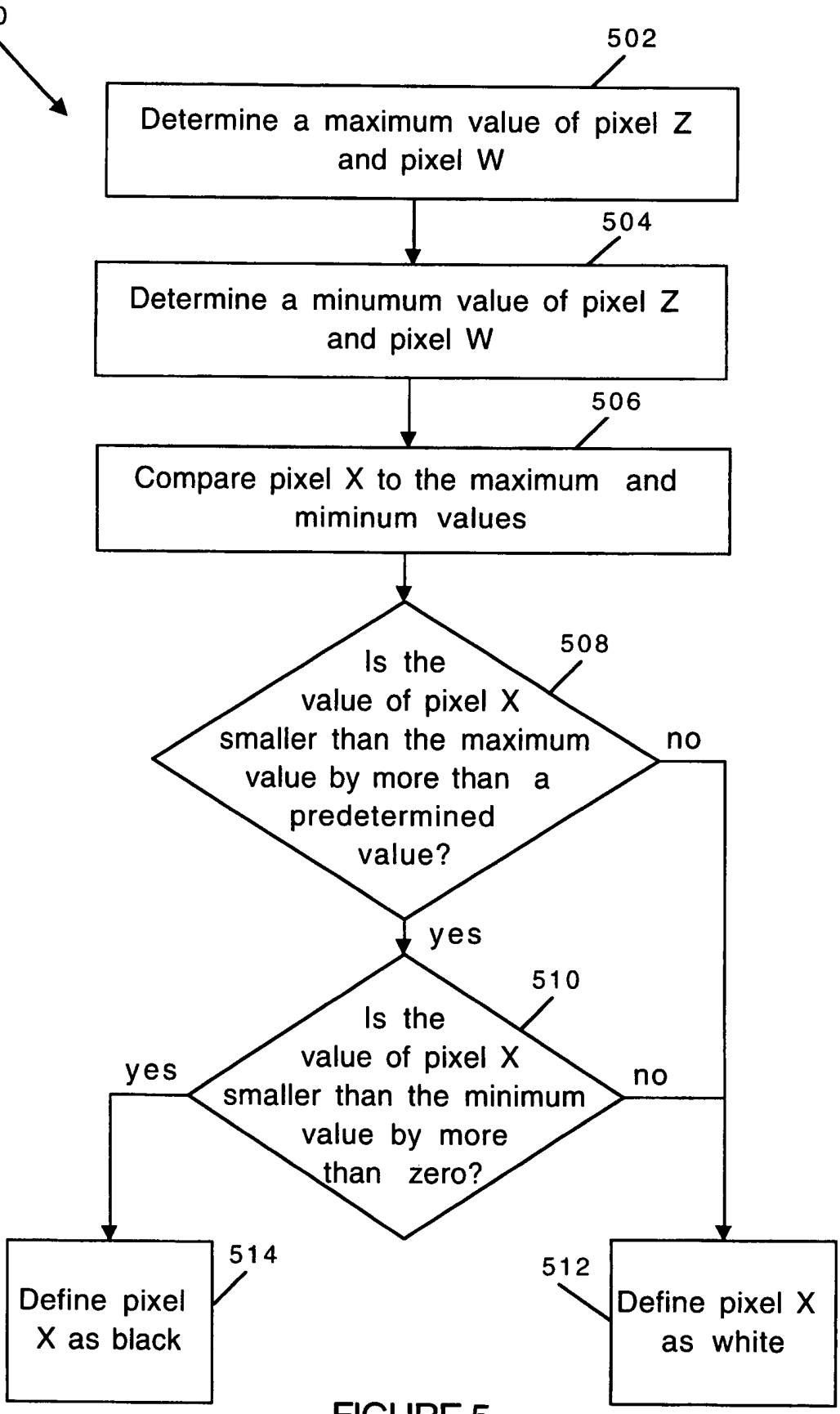
500
502
Determine a maximum value of pixel Z and pixel W
504
Determine a minumum value of pixel Z and pixel W
506
Compare pixel X to the maximum and miminum values
508
Is the value of pixel X smaller than the maximum value by more than a predetermined value?
no
yes
510
Is the value of pixel X smaller than the minimum value by more than zero?
yes
no
514
Define pixel X as black
512
Define pixel X as white

FIGURE 5

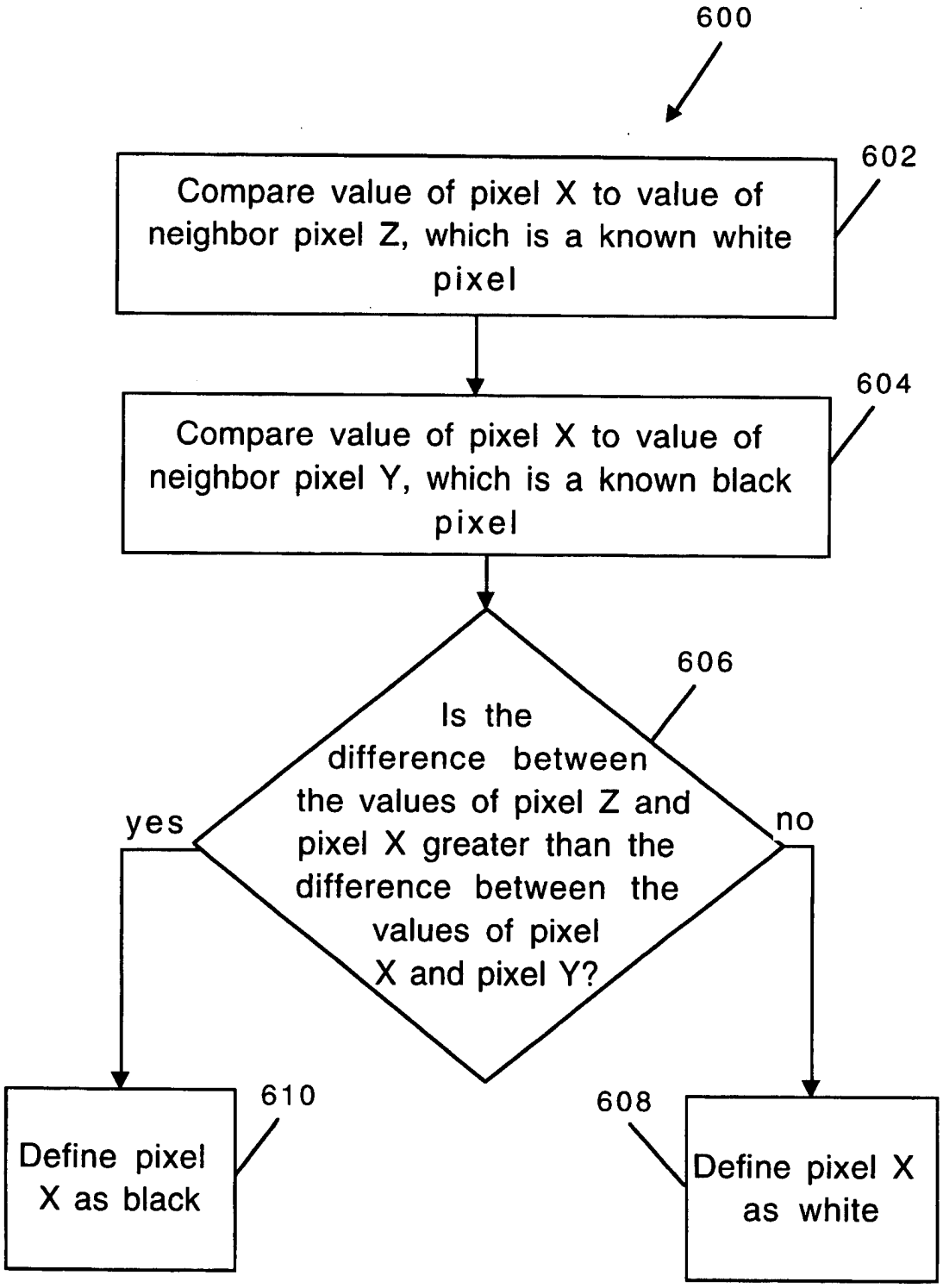
600
602
Compare value of pixel X to value of neighbor pixel Z, which is a known white pixel
604
Compare value of pixel X to value of neighbor pixel Y, which is a known black pixel
606
Is the difference between the values of pixel Z and pixel X greater than the difference between the values of pixel X and pixel Y?
yes
no
610
Define pixel X as black
608
Define pixel X as white

FIGURE 6

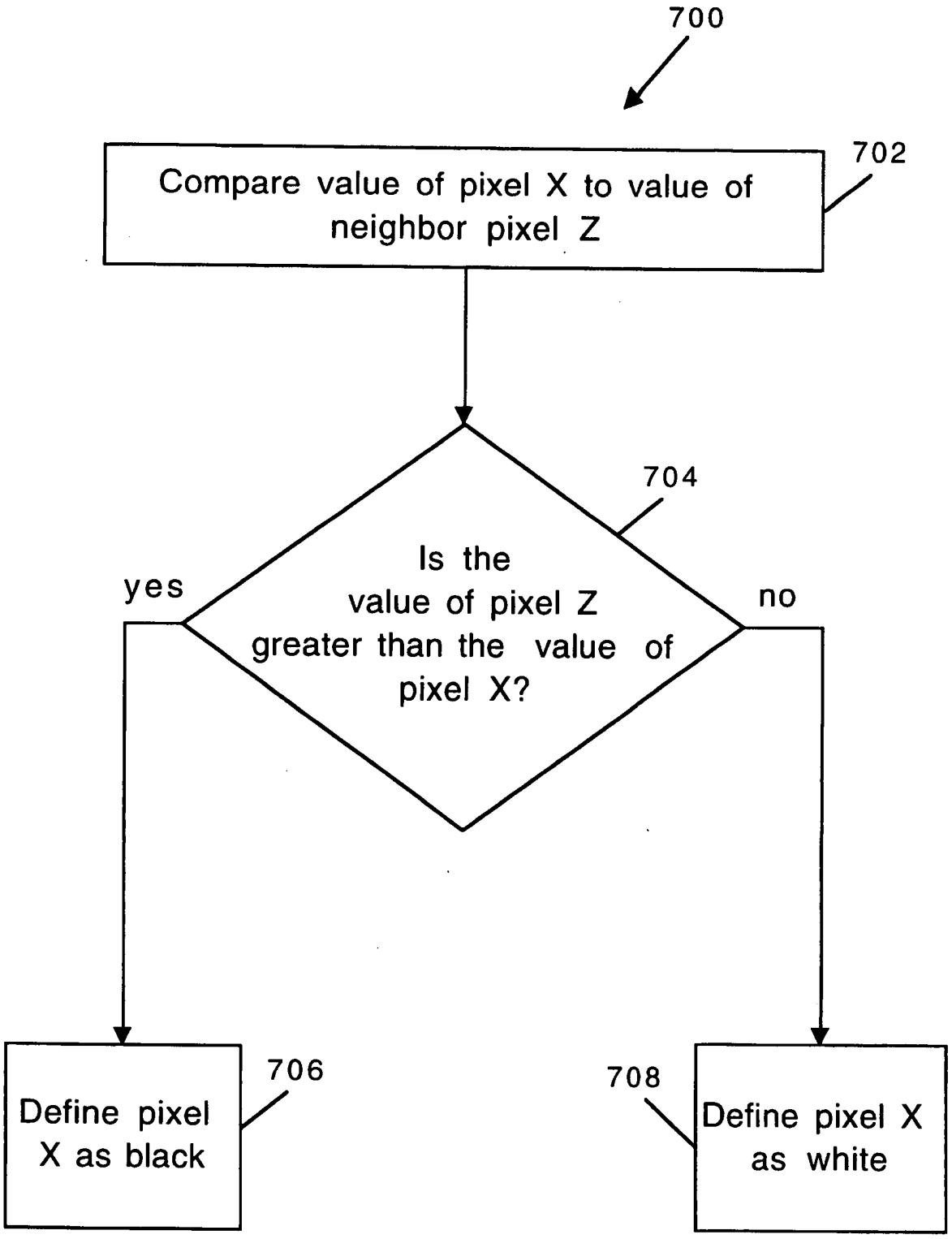
700
Compare value of pixel X to value of neighbor pixel Z
702
Is the value of pixel Z greater than the value of pixel X?
704
yes
no
Define pixel X as black
706
Define pixel X as white
708

FIGURE 7

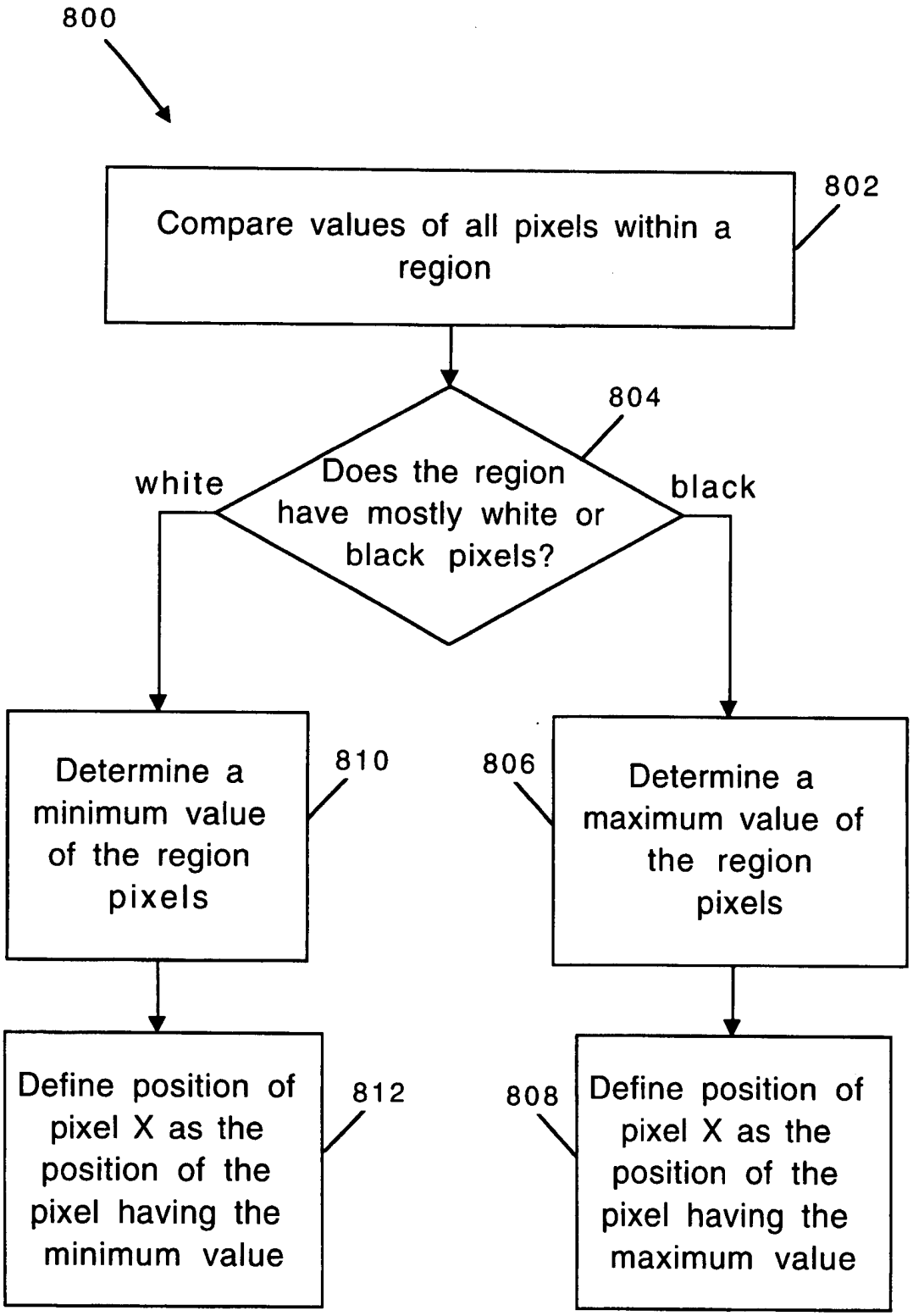
800
Compare values of all pixels within a region
802
Does the region have mostly white or black pixels?
804
white
black
Determine a minimum value of the region pixels
810
806
Determine a maximum value of the region pixels
Define position of pixel X as the position of the pixel having the minimum value
812
808
Define position of pixel X as the position of the pixel having the maximum value

FIGURE 8

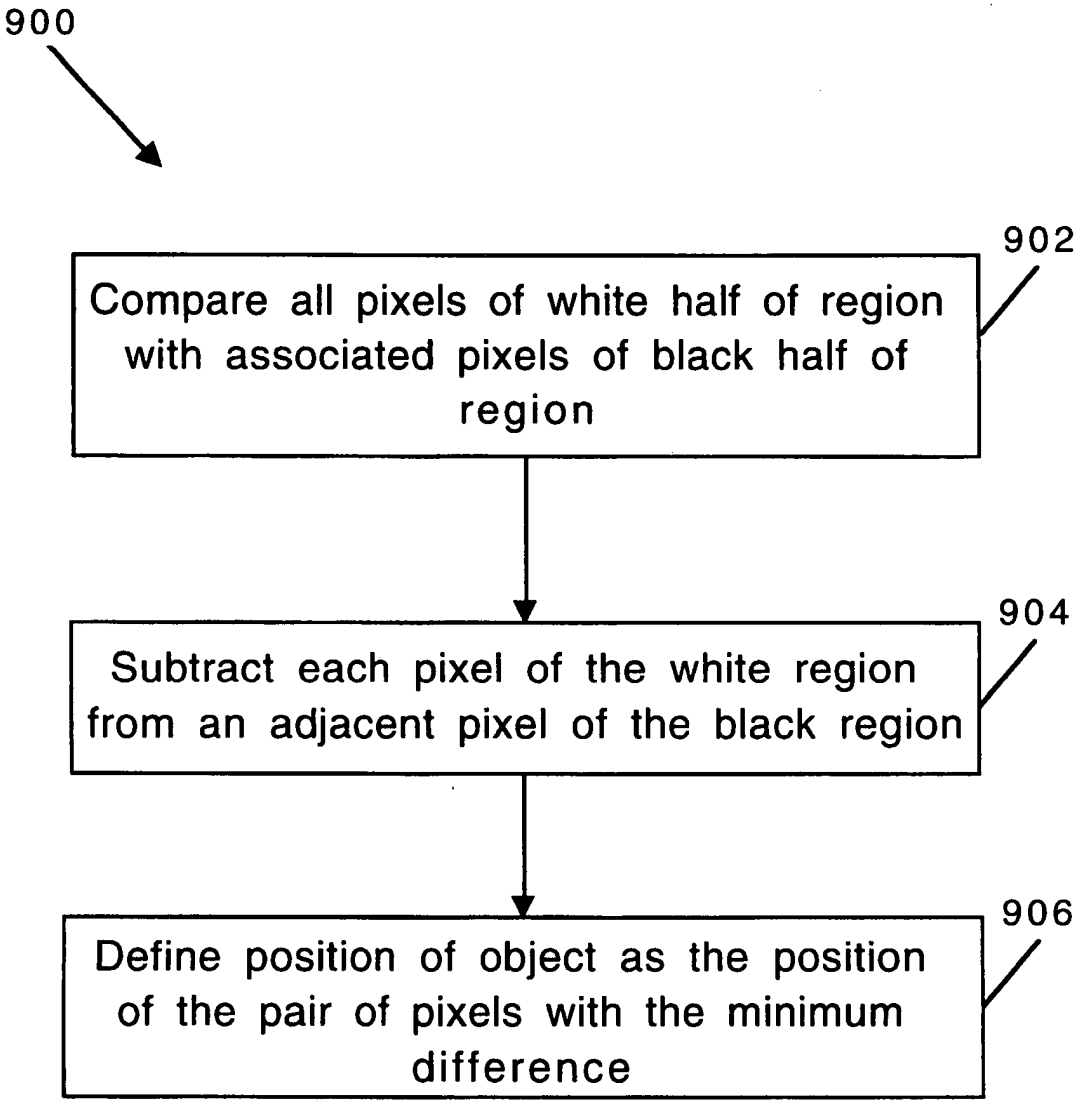
900
902
Compare all pixels of white half of region with associated pixels of black half of region
904
Subtract each pixel of the white region from an adjacent pixel of the black region
906
Define position of object as the position of the pair of pixels with the minimum difference

FIGURE 9

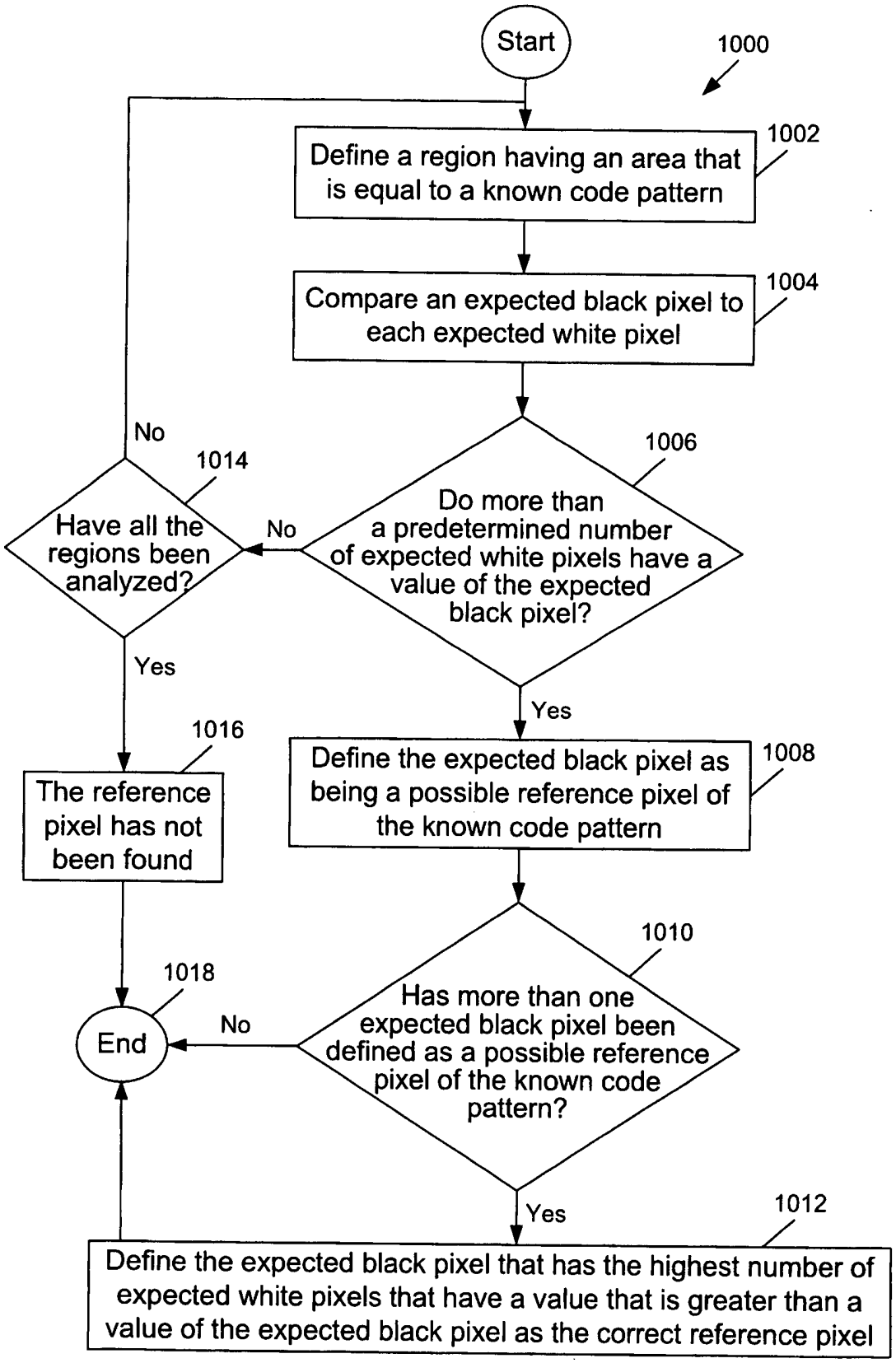
Start
1000
Define a region having an area that is equal to a known code pattern
1002
Compare an expected black pixel to each expected white pixel
1004
Do more than a predetermined number of expected white pixels have a value of the expected black pixel?
1006
No
Have all the regions been analyzed?
1014
No
Yes
Yes
Define the expected black pixel as being a possible reference pixel of the known code pattern
1008
The reference pixel has not been found
1016
Has more than one expected black pixel been defined as a possible reference pixel of the known code pattern?
1010
No
End
1018
Yes
Define the expected black pixel that has the highest number of expected white pixels that have a value that is greater than a value of the expected black pixel as the correct reference pixel
1012

FIGURE 10

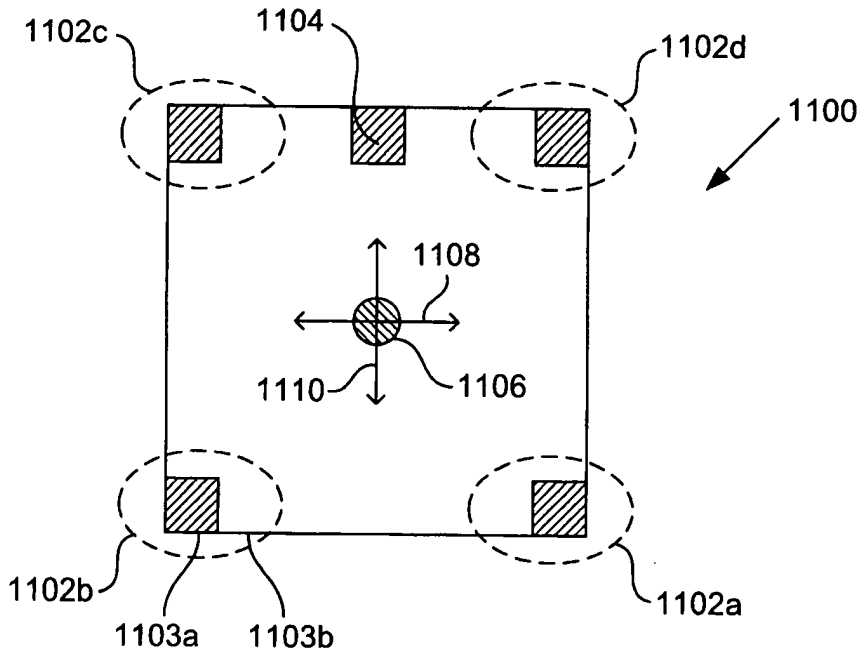

FIGURE 11

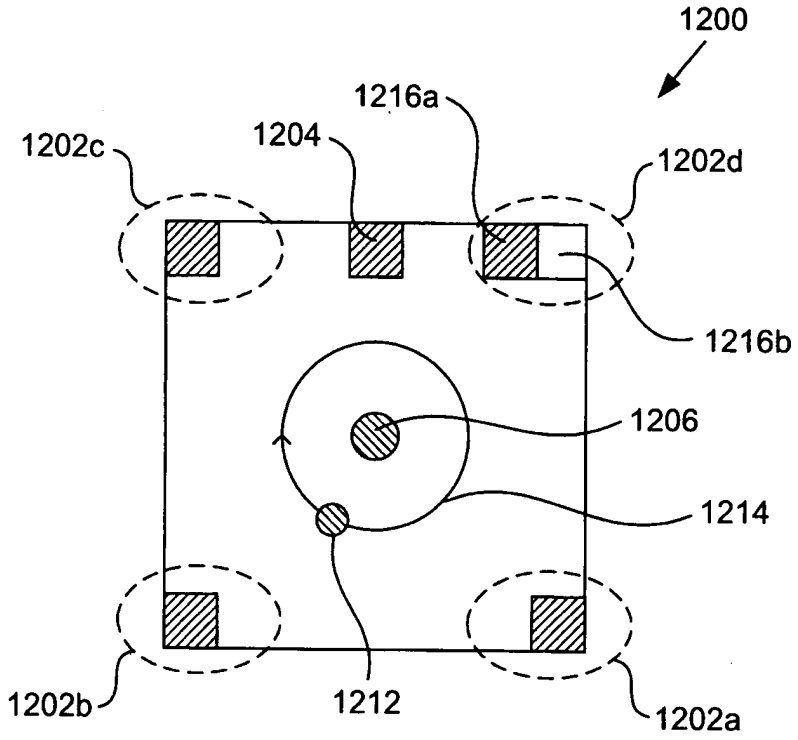

FIGURE 12

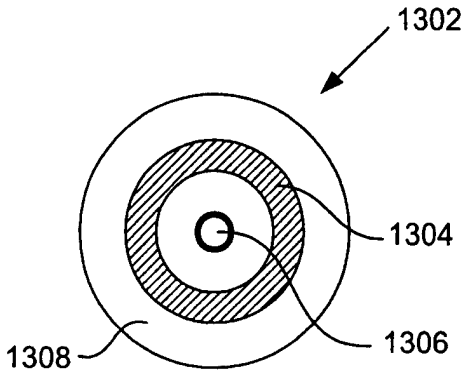

FIGURE 13a

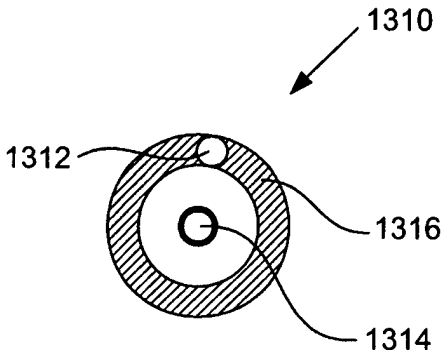

FIGURE 13b

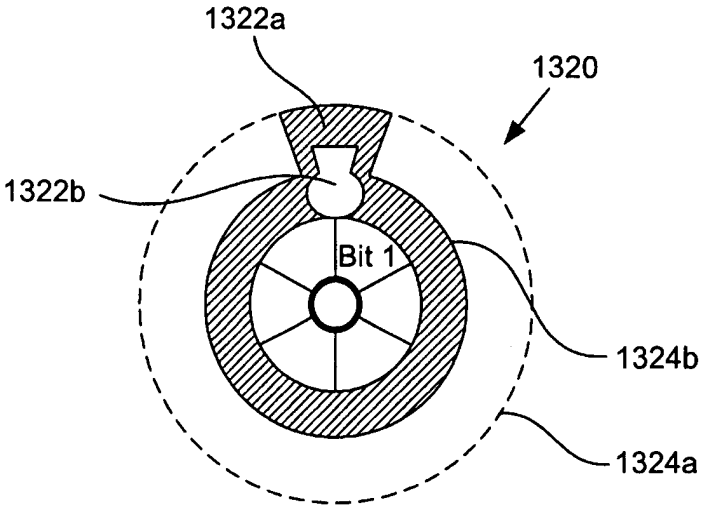

FIGURE 13c

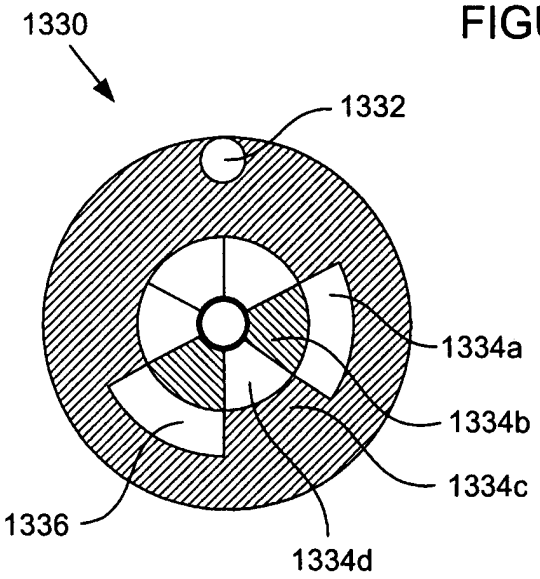

FIGURE 13d

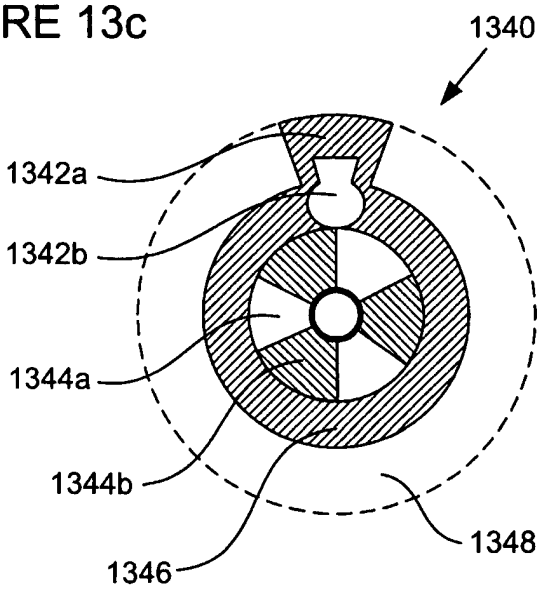

FIGURE 13e

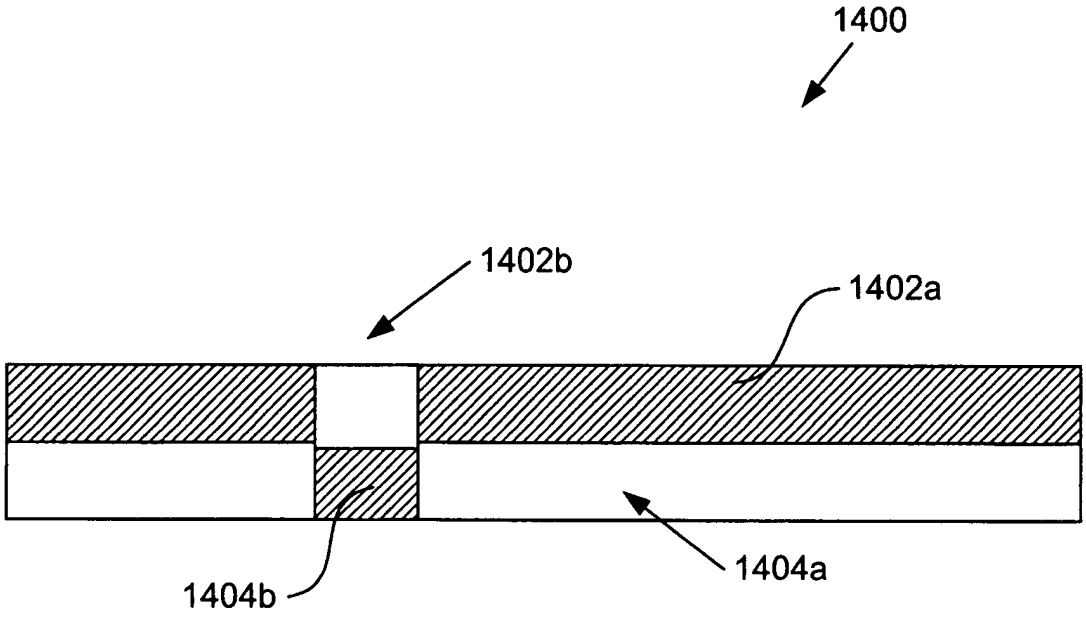

FIGURE 14

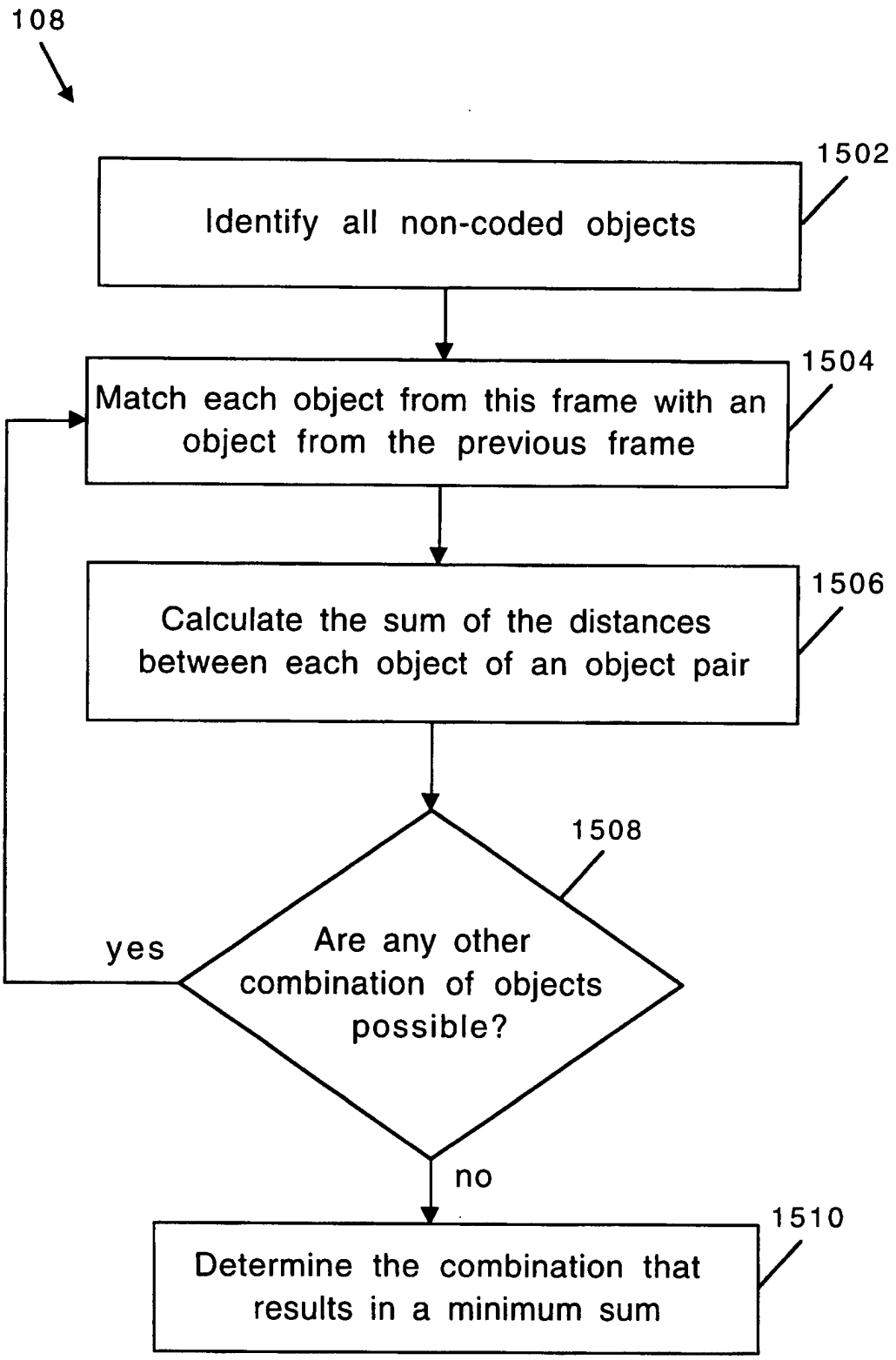
108
1502
Identify all non-coded objects
1504
Match each object from this frame with an object from the previous frame
1506
Calculate the sum of the distances between each object of an object pair
1508
Are any other combination of objects possible?
yes
no
1510
Determine the combination that results in a minimum sum

FIGURE 15

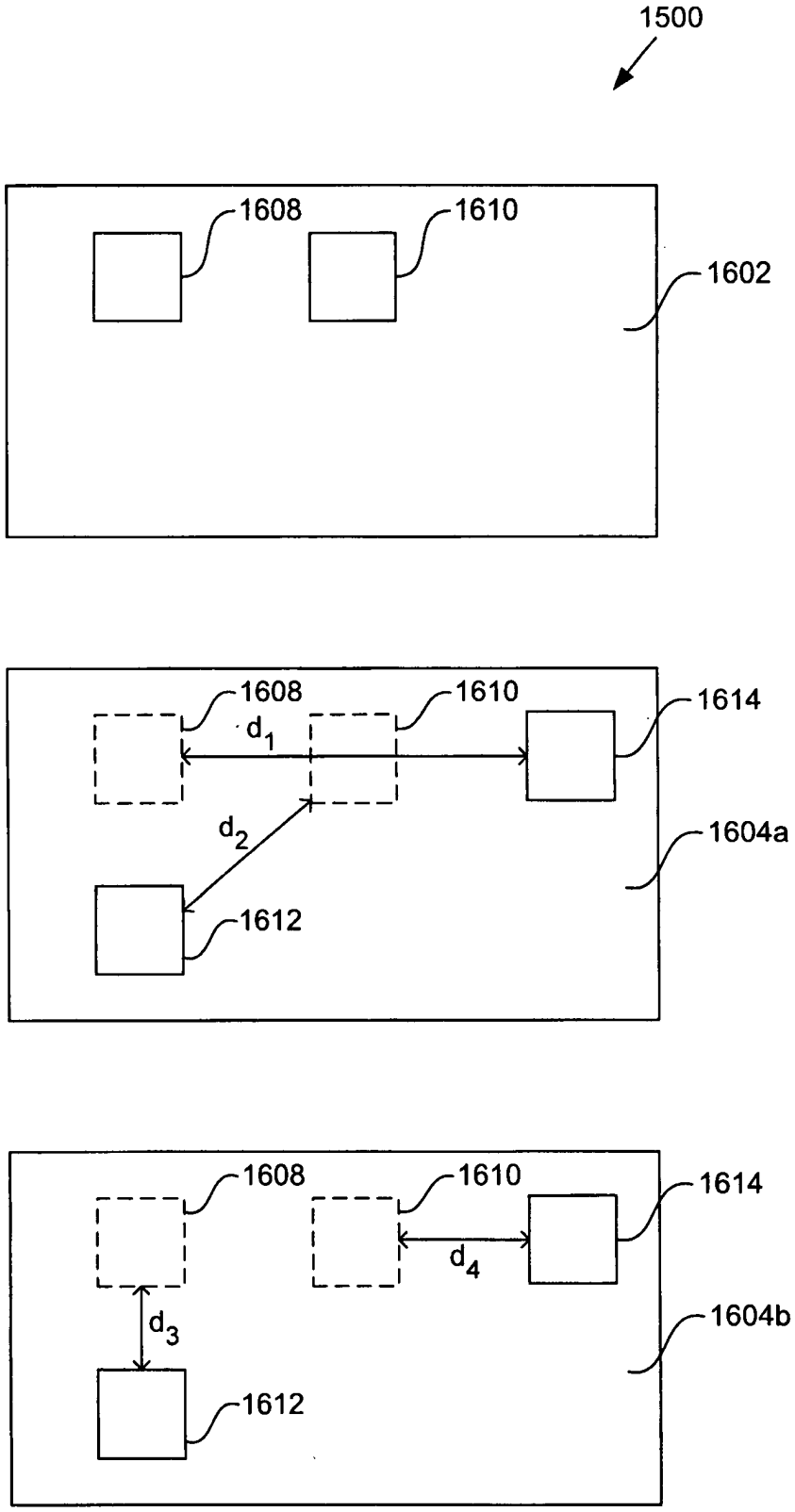
1500
1608
1610
1602
1608
1610
1614
d_1
d_2
1604a
1612
1608
1610
1614
d_4
d_3
1604b
1612

FIGURE 16

CODED OBJECT SYSTEM AND CODE RECOGNITION METHODS

CROSS REFERENCE TO RELATED APPLICATIONS

This application claims priority to U.S. patent application Ser. No. 08/675,104 filed Jul. 3, 1995 entitled, "Video Camera Based Computer Input System With Interchangeable Physical Interface" by Piernot, et al., having assignment rights in common with the present invention, and which is herein incorporated by reference. This application is related to U.S. Patent application Ser. No. 09/018,023 filed concurrently herewith, which is incorporated herein by reference for all purposes.

BACKGROUND OF THE INVENTION

This invention relates generally to a coded object system and computer methods for recognizing codes and more particularly to coded objects and code recognition methods within an environment with low lighting, low resolution, and low dynamic range capabilities of the code reader.

Bar-codes are a specific type of coded object and are becoming increasingly popular as a means of identifying objects. Consequently, bar-codes are quickly being introduced into many segments of society. That is, bar-codes are not merely being used to identify grocery store items in a supermarket. For example, bar-codes are now being used by businesses to keep track of documents and by manufacturers to keep track of components within their assembly line.

When one thinks of conventional bar-codes, one initially thinks of bar-codes that are used on product packaging to identify the product type and price, for example. Typically, a product bar-code is in the form of dark lines or "bars" against a light background. The dark bars are arranged in parallel and are of varying width. Typically, a bar-code reader that includes a laser beam is configured to read the bar-code. The width of each bar is determined by calibrating each bar with a particular frequency of the laser beam. The identification of each bar-code is then determined by ascertaining the arrangement of bars and associated widths of the bar-code. A similar type arrangement is used for recognizing business documents.

Although the above-described bar-code system works adequately within the business world, this bar-code system has many limitations. For example, the bar-code must conform to a set of strict size and shape requirements. Also, the bar-code must be positioned directly under the laser beam of the bar-code reader or the laser beam must be positioned directly over the bar-code. This positioning must be accomplished in such a way as to allow the laser beam to move perpendicularly across the parallel widths of the bars. If these requirements are not met, the bar-code reader will fail to correctly identify the bar-code. Thus, one must ensure that the bar-codes meet the size and shape requirements, and that the bar-code reader is used correctly. Since one cannot completely eliminate human error, for example, it is difficult to achieve perfect reliability for reading and identifying bar-codes in the above-described conventional system.

Another conventional bar-code system utilizes a camera for reading the bar-code, instead of a laser, and is typically found within a manufacturing environment. For example, bar-codes are placed on components so that a camera may identify each component as the components moves through the assembly line. That is, a camera may be placed at a specified location such that a bar-code of a component moves directly below the camera. The camera translates the bar-code into a representational image, and the image is then analyzed and interpreted. The camera is typically configured and positioned so that the bar-code fills the view of the camera and the camera takes a high-resolution bar-code image which is then analyzed and identified.

Like the conventional laser-based bar-code system, the conventional camera-based bar-code system has many disadvantages. For example, in order to achieve accurate results, the camera must have a high dynamic range, the lighting must be consistently bright, or the resolution of the bar-code image must be relatively high. Otherwise, the bar-code image may be incorrectly interpreted. For example, under low lighting conditions, the bars of the bar-code image may appear wider than they actually are. By way of another example, if the resolution is too low, the bar-code image may appear blurry. That is, one dark area of the bar-code is mapped onto too few pixels, and the bar-code image is analyzed incorrectly. In sum, the reliability of the camera-based bar-code system is dependent on lighting conditions, resolution parameters, and camera specifications.

As a result of the built-in constraints of the above-described conventional bar-codes recognition systems, the above-described systems only work in a tightly constrained environment. For example, conventional bar-code systems may not work well in the context of a system where the bar-code was positioned within a small area of the image. By way of another example, the reliability of conventional bar-code systems may be significantly reduced under poor or nonuniform lighting conditions.

Thus, there is a need for an improved coded object system and a method for recognizing codes within the coded object system even when lighting conditions, resolution parameters, and camera capabilities are not ideal. That is, what is needed is a method and apparatus for recognizing codes within a less constrained environment. Additionally, there is a need for a code recognition system that could be implemented in real time and run on a relatively low-end processor.

SUMMARY OF THE INVENTION

To achieve the foregoing and other objects and according to the purpose of the present invention, a method of tracking coded objects that are located within a physical system and are represented within an image is disclosed. The method includes the act of receiving a first image having a plurality of image pixels that include a first pixel, a first neighbor pixel, and a plurality of coded objects pixels that include the first pixel, wherein the coded object pixels represent a first coded object of the physical system that has a known code pattern and the act of obtaining object data about the first coded object by comparing luminosity values of the first pixel and the first neighbor pixel.

In a preferred embodiment, the object data specifies a pixel of the plurality of pixels as being a reference pixel within the first coded object that has the known code pattern. The act of obtaining the object data further includes the acts of comparing luminosity values of the first pixel and a first group of neighbor pixels of the plurality of pixels, determining a first count of the first group neighbor pixels that have a luminosity value that is lower than a first pixel luminosity value of the first pixel, determining whether the first count is more than a predetermined number, and defining the first pixel as the reference pixel of the first code object when the first count is higher than the second count.

In an alternative embodiment, the object data specifies a pixel of the plurality of pixels as being a reference pixel

within the first coded object that has the known code pattern. The act of obtaining object data include the acts of comparing luminosity values of the first pixel and a first group of neighbor pixels of the plurality of pixels, determining a first count of the first group neighbor pixels that have a luminosity value that is lower than a first pixel luminosity value of the first pixel, comparing luminosity values of a second pixel and a second group of neighbor pixels of the plurality of pixels determining a second count of the second group neighbor pixels that have a luminosity value that is lower than a second pixel luminosity value of the second pixel, and determining whether the second count is more than a predetermined number. The act of obtaining object data further includes the act of defining the first pixel as the reference pixel of the first code object when the first count is higher than the second count and the act of defining the second pixel as the reference pixel of the first code object when the second count is higher than the first count.

In another embodiment, the object data indicates a position of the first pixel. The act of obtaining the object data further includes the act of comparing luminosity values of a first region of pixels of the plurality of pixels to determine a minimum value position of a selected pixel of the first region that has a minimum luminosity value that is lower than any other pixel of the first region, wherein the region includes the first pixel, the first pixel having a black color and the other pixels of the region having a white color. The act of obtaining the object data further includes the act of defining the position of the first pixel as being at the minimum value position within the first region.

In a preferred embodiment, the act of obtaining the object data further indicates a position of a second pixel, wherein the first pixel being black and the second pixel being white. The act of obtaining the object data further includes the act of subtracting the luminosity value of each pixel of the plurality of pixels that is positioned within a defined white region from an associated pixel of the plurality of pixels that is positioned in a defined black region. The pixels of the defined white region are mostly white except for the first pixel, and the pixels of the defined black region are mostly black accept for the second pixel. The act of obtaining the object data further includes the acts of determining a minimum subtraction position for the pixels that result in a lowest subtraction result and defining the position of the first pixel and the second pixel as being at the minimum subtraction position within the white region and the black region.

In an alternative embodiment, the object data indicates whether the first pixel is black or white, and the first neighbor pixel is a known white pixel. The act of obtaining the object data includes the acts of determining whether a first pixel luminosity value of the first pixel is smaller than a first neighbor luminosity value of the first neighbor pixel by more than a predetermined value, defining the first pixel as black when the first pixel luminosity value of the first pixel is smaller than the first neighbor luminosity value of the first neighbor pixel by more than a predetermined value, and defining the first pixel as white when the first pixel luminosity value of the first pixel is not smaller than the first neighbor luminosity value of the first neighbor pixel by more than a predetermined value.

In an alternative embodiment, the object data also indicates whether the first pixel is black or white, and the first neighbor pixel is a known white pixel. The act of obtaining the object data further includes the acts of comparing luminosity values of the first pixel and a second neighbor pixel of the plurality of pixels, wherein the first neighbor pixel and the second neighbor pixel are known white pixels, and determining whether a first pixel luminosity value of the first pixel is smaller than a maximum value luminosity of the first neighbor pixel and the second neighbor pixel by more than a predetermined value.

In an alternative embodiment, the object data also indicates whether the first pixel is black or white, and the first neighbor pixel is a known white pixel. The act of obtaining the object data further includes of the acts of comparing luminosity values of the first pixel and a second neighbor pixel, wherein the first neighbor pixel is a known white pixel and the second neighbor pixel is a known black pixel, determining whether the first pixel luminosity value of the first pixel is smaller than the first neighbor luminosity value of the first neighbor pixel by more than a second neighbor luminosity value of the second neighbor pixel is smaller than the first pixel luminosity value of the first pixel, defining the first pixel as black when the first pixel luminosity value of the first pixel is smaller than the first neighbor luminosity value of the first neighbor pixel by more than the second neighbor luminosity value of the second neighbor pixel is smaller than the first pixel luminosity value of the first pixel, and defining the first pixel as white when the first pixel luminosity value of the first pixel is not smaller than the first neighbor luminosity value of the first neighbor pixel by more than the second neighbor luminosity value of the second neighbor pixel is smaller than the first pixel luminosity value of the first pixel.

In an alternative embodiment, the object data also indicates whether the first pixel is black or white, and the first neighbor pixel is a known white pixel. The first neighbor pixel has a color that is opposite a color of the first pixel, and the act of obtaining the object data further includes the acts of determining whether a first neighbor luminosity value of the first neighbor pixel is greater than a first pixel luminosity value of the first pixel, defining the first pixel as black when the first neighbor luminosity value of the first neighbor pixel is greater than the first pixel luminosity value of the first pixel, and defining the first pixel as white when the first neighbor luminosity value of the first neighbor pixel is not greater than the first pixel luminosity value of the first pixel.

In another embodiment of the present invention, a coded object that is configured to be scanned by a camera and included in an image that is received as input to a computer implemented coded object recognition program is disclosed. The coded object includes a first region that is represented as a first region image in the received image and a second region that is represented as a second region image in the received image. The first region has an opposite color of the second region such that the coded object may be matched to a known coded pattern by determining whether a certain percentage of pixels within the second region image have a higher luminosity value than the first region image.

BRIEF DESCRIPTION OF THE DRAWINGS

FIG. **1** is a flowchart illustrating a process of recognizing objects within a physical system in accordance with one embodiment of the present invention.

FIG. **2** is a flowchart illustrating the process of FIG. **1** of tracking the coded objects in accordance with one embodiment of the present invention.

FIG. **3** is a flowchart illustrating a single-precision, single-color, single-sided method of discriminating pixels in accordance with one embodiment of the present invention.

FIG. **4** is a flowchart illustrating a single-precision, single-color, double-sided method of discriminating pixels in accordance with one embodiment of the present invention.

FIG. **5** is a flowchart illustrating a single-precision, single-color, combination method (combo method) of discriminating pixels in accordance with one embodiment of the present invention.

FIG. **6** is a flowchart illustrating a single-precision and double-color method of discriminating pixels in accordance with one embodiment of the present invention.

FIG. **7** is a flowchart illustrating a double-precision method of discriminating pixels in accordance with one embodiment of the present invention.

FIG. **8** is a flowchart illustrating a single-precision method of detecting the position of a particular object in accordance with one embodiment of the present invention.

FIG. **9** is a flowchart illustrating a double-precision method of detecting the position of a particular object in accordance with one embodiment of the present invention.

FIG. **10** is a flowchart illustrating pattern detection and selection methods in accordance with one embodiment of the present invention.

FIG. **11** is a coded object in accordance with one embodiment of the present invention.

FIG. **12** is a coded object having a rotating object in accordance with an alternative embodiment of the present invention.

FIG. **13***a* is a circular coded object in accordance with an alternative embodiment of the present invention.

FIG. **13***b* is a circular coded object having a double-precision angle point in accordance with an alternative embodiment of the present invention.

FIG. **13***c* is a circular coded object having a double-precision angle point in accordance with an alternative embodiment of the present invention.

FIG. **13***d* is a circular coded object having a single-precision angle point and double-precision bits in accordance with an alternative embodiment of the present invention.

FIG. **13***e* is a circular coded object having a double-precision angle point and single-precision bits in accordance with an alternative embodiment of the present invention.

FIG. **14** is a coded object having a double-precision movable object in accordance with an alternative embodiment of the present invention.

FIG. **15** is a flowchart illustrating the process of FIG. **1** of tracking the non-coded objects in accordance with one embodiment of the present invention.

FIG. **16** is a diagrammatic representation of two successive frames having multiple non-coded objects that are to be matched in accordance with one embodiment of the present invention.

DETAILED DESCRIPTION OF THE PREFERRED EMBODIMENTS

While this invention has been described in terms of several embodiments and specific examples, there are alterations, permutations, and equivalents which fall within the scope of this invention. It is therefore intended that the following appended claims be interpreted as including all such alterations, permutations, and equivalents as fall within the true spirit and scope of the present invention.

In general terms, the current invention includes a method and apparatus for analyzing an image having a plurality of coded physical objects, and recognizing and analyzing the coded physical objects under variable conditions. The present invention may be implemented for tracking coded objects that have fixed locations, as well as tracking coded objects that have variable locations. (The term "tracking" includes the acts of recognizing, interpreting, and/or analyzing coded objects within a particular frame, as well as from frame to frame).

The present invention may be implemented on any conventional hardware and computer interface system. For example, the present invention is well suited for recognizing and tracking game pieces within a physical game system, where the user may manipulate physical objects or game pieces on the game board, or toy board. The present invention is especially well suited for tracking coded objects (or game pieces) in a physical game system.

Basically, an image is received from a camera that has obtained the image of the physical system, including the coded objects. The image is analyzed using techniques, which are described below, to track the coded object. For example, the techniques of the present invention may be implemented to identify and interpret the coded objects.

Although portions of the following description are in reference to a game board, of course, it should be well understood by those skilled in the art that the application of the current invention is not limited to a game board, but may be implemented with any appropriate physical objects where recognition of coded objects is required. Although the following description is in reference to a computer system interface, it should be understood that other type of interfaces may be used, such as a television game system or set top box.

The present invention may be implemented with a video camera computer input system having an interchangeable spatial reference member with various physical objects thereon. One example of an interchangeable spatial reference member is a game board. A camera is positioned to obtain an image of the interchangeable spatial reference member (or game board) and physical objects (game pieces). Several examples of various video camera computer input systems and spatial reference members are described in U.S. patent application Ser. No. 08/675,104 filed Jul. 3, 1995 entitled, "Video Camera Based Computer Input System With Interchangeable Physical Interface" by Piernot, et al., and which is herein incorporated by reference.

A computer method may be provided for interfacing with the physical objects of the game board in a complex manner. As the user interacts with the physical objects, the user is provided with a corresponding audiovisual interaction on the computer, which interaction greatly enhances the game experience. Several examples of computer interfaces for a physical game board are described in co-pending U.S. patent application Ser. No. 09/018,023 filed concurrently herewith, which is incorporated herein by reference for all purposes.

FIG. **1** is a flowchart illustrating a process **100** of recognizing objects within a physical system in accordance with one embodiment of the present invention. Initially, in operation **102**, image data is received. This image may include a representation of the entire underside of the board game, for example. That is, the image will include coded objects that are associated with particular physical objects on the game board. The image may also include non-coded objects, such as the user's hand as detected through a transparent board, for example.

After the image data is received, the camera exposure may be adjusted to obtain the best image in operation **104**. Of course, the camera may not have to be adjusted if the image is already optimal or object identification reliability is at an acceptable level. In operation **106**, the coded objects are

tracked, which operation is further described in reference to FIG. **2** through **10**. In operation **108**, the non-coded objects are tracked. Of course, operation **108** is optional and is dependent on the application and whether it is necessary to track non-coded objects. Operation **108** is described in more detail below with reference to FIGS. **15** and **16**.

After the non-coded objects, if any, are tracked, object data that was obtained during the tracking operations **106** and **108** is stored in operation **110**. Object data includes information that may be utilized to identify, interpret, and/or recognize the objects or portions of the coded object. Next, operations **102** through **110** are repeated so that another set of image data is received, the camera is adjusted, coded and non-coded objects are tracked, a new set of object data is stored, and operations **102** through **110** are repeated for another received image.

The adjusting procedure of operation **104** may be accomplished by a conventional luminosity-based method. For example, the exposure may be adjusted such that the average luminosity of the entire image is 50%. However, this conventional exposure adjustment method is dependent on the objects of the physical system. For example, if the physical system has an unusual number of dark objects, the exposure may be incorrectly adjusted such that the image is overexposed.

Alternatively, a more preferred embodiment of the present invention includes a method for adjusting the exposure by analyzing the entropy level of the image. That is, an entropy level of the image is computed. An exposure time is then computed that will be expected to maximize the entropy of the image. In one embodiment, a PID control algorithm is used. The entropy of an image represents the amount of information contained in the image, as is well understood by those of skill in the art of information processing. Maximizing the amount of information contained in the image is one way that an optimal exposure time may be determined. Although this method works well for objects on sealed opaque surface, this method also has the disadvantage of being dependent on the objects in the physical system.

In a most preferred embodiment, the physical system includes a tag that is designed to have a predetermined luminosity. The exposure is adjusted so that the luminosity of the tag is equal to the predetermined luminosity. For example, if the tag is designed to have a middle-gray color, the exposure will be adjusted such that the tag has a 50% luminosity. This tag-based adjustment method has the advantage of being dependent only on the lighting of the system and not on the objects of the physical system.

FIG. **2** is a flowchart illustrating the process **106** of FIG. **1** of tracking the coded objects in accordance with one embodiment of the present invention. In contrast to conventional thresholding and segmentation techniques that are used for tracking non-coded objects, the process **106** of tracking coded objects works with the gray-image.

Tracking coded objects is accomplished by comparing pixel luminosity values within the image. The results of the comparison are analyzed in various ways and are used to recognize and interpret the coded objects by matching a pixel to a reference pixel of a known code pattern (operation **202**), discriminating pixels (operation **204**), and/or determining positions of particular objects relative to a known region (operation **206**).

Of course, it may not be necessary to perform all four operations in order to track a coded object. The inclusion or exclusion of operations **202** through **206** depends on the design of the coded object and requirements of the application in which the coded object is being used. Operation **202** through **206** may be executed in any order that is suitable for tracking a particular coded object.

Additionally, each operation that is used for tracking coded objects has several alternative embodiments (which are described below in reference to FIGS. **3** through **10**), where the embodiment choice depends on the particular design of the coded object and application being used. Several alternative embodiments of coded objects that work well with one or more of the alternative embodiments for tracking coded objects are described below in reference to FIGS. **11** through **13**. Although specific techniques have been described for tracking coded objects in reference to FIGS. **3** through **10**, these techniques are merely example techniques for tracking coded objects by comparing pixel luminosity values and are not meant to limit the scope of the invention.

Turning now to the process **106** of FIG. **2** of tracking coded objects, a particular pixel is matched with a reference pixel in a known code pattern in operation **202**. For example, it is determined which pixel matches a center pixel of the known code pattern. In operation **204**, pixels are discriminated. That is, it is determined whether a particular pixel (herein after referred to as "pixel X") is a black pixel or a white pixel. In operation **206**, positions of particular objects are determined within a defined region of the image. For example, a particular object may be found within a defined region by implementing the techniques of operation **206**.

Operations **202** through **206** are described below in detail in reference to FIGS. **3** through **10**. Specifically, FIGS. **3** through **7** are flowcharts illustrating methods of discriminating pixels (operation **204**) in accordance with various embodiments of the present invention. FIGS. **8** and **9** are flowcharts illustrating methods of detecting the positions of objects (operation **206**) in accordance with two alternative embodiments of the present invention. FIG. **10** is a flowchart illustrating a method of detecting and selecting a known code pattern (operation **202**) in accordance with one embodiment of the present invention.

FIG. **3** is a flowchart illustrating a single-precision, single-color, single-sided method of discriminating pixels in accordance with one embodiment of the present invention. Specifically, FIG. **3** illustrates a method of determining whether pixel X, for example, is a black pixel or a white pixel by comparing and analyzing luminosity values of pixel X and a neighbor pixel Z, which is a known white pixel The following procedure works under the assumption that if pixel X is black, its luminosity value will be lower than neighbor pixel Z's by at least a certain amount.

Initially, in operation **302** pixel X is compared to the neighbor pixel Z, which is a known white pixel. Next, in operation **304** it is determined whether the luminosity value of pixel X is smaller than the luminosity value of pixel Z by more than a predetermined constant. Preferably, the predetermined constant is greater than zero so as to increase the likelihood that a white pixel under nonuniform lighting conditions will be characterized appropriately. Most preferably, the predetermined constant is set to a medium value, such as 50% luminosity, such that the predetermined constant is greater than the maximum margin between two white pixels Z and X under nonuniform lighting conditions, for example.

Since pixel Z is a white pixel, pixel X will be substantially smaller than pixel Z if pixel X is black. (Herein after, the term "smaller" means that a luminosity value of a pixel is smaller than another pixel's luminosity value). However, if

pixel X is white, pixel X will be about equal to pixel Z. Thus, in this embodiment, the color of pixel X is ascertained by comparing the values of pixel X and a white pixel Z. That is, when pixel X is smaller that pixel Z by more than the predetermined constant, pixel X is defined as a black in operation **306**. When the pixel X is not smaller than pixel Z by more than a predetermined constant, pixel X is defined as white in operation **308**.

This embodiment may be implemented, for example, by the following expression:

IF (pixel Z−pixel X)>k THEN pixel X=black ELSE pixel X=white ENDIF.

The constant "k" is the predetermined constant, which value is chosen such that accuracy is optimized for variable lighting conditions and corresponding variable luminosity values for a white pixel Z and X.

Although the neighbor pixel Z has been described in this embodiment as being a white pixel, it should be realized by those skilled in the art that pixel Z may be black with only slight modifications to the operations of process **106**. For example, operation **304** would, for example, be modified to determine whether pixel Z is smaller than pixel X by more than a predetermined constant. Alternatively, operation **304** may be modified to determine whether pixel X is larger than pixel Z; operation **306** would be modified to define pixel X as a white pixel, for example, when pixel X was found to be larger. In sum, there are several techniques that may be used for discriminating pixel X by comparing luminosity values of pixel X and a neighbor pixel that represents an object in the physical system that has a known color.

FIG. **4** is a flowchart illustrating a single-precision, single-color, double-sided method of discriminating pixels in accordance with one embodiment of the present invention. In this embodiment, luminosity values are compared and analyzed for pixels X, Z, and W. Pixels Z and W are known white pixels. The following procedure works under the assumption that if pixel X is black, it will have a luminosity value that is lower than the brightest neighbor pixel. In other words, at least one of pixel Z or W will be significantly brighter than pixel X if pixel X is, in fact, black.

Initially, in operation **402** a maximum value of neighbor pixels Z and W is determined. In operation **404**, this maximum value is compared to the value of pixel X. Preferably, pixels W and Z are on opposite sides of pixel X. This opposite placement is to increase the likelihood that one of pixels W and Z will be exposed to the same amount of light or more as pixel X. Alternatively, pixel X may be compared to white neighbor pixels that are placed on all four sides adjacent to pixel X; this "quad-sided" method would improve reliability of the discrimination process.

Next, in operation **406** it is determined whether the value of pixel X is smaller than the maximum value by more than a predetermined value. When pixel X is smaller than the maximum value, pixel X is defined as black in operation **410**. When pixel X is not smaller than the maximum value by the predetermined value, pixel X is defined as white in operation **408**.

Preferably, the predetermined value is greater than zero to increase the likelihood that a white pixel X will be characterized appropriately. Most preferably, the predetermined value is set to a medium value, such as 50% luminosity. The predetermined value may be greater than the predetermined constant used in the single-sided method of FIG. **3**. That is, the difference between the maximum value and the value of pixel X in the double-sided method of FIG. **4** is likely to be greater than the difference between pixel X and pixel Z in the single-sided method of FIG. **3**.

This embodiment may be implemented, for example, by the following expression:

IF (Max(pixel Z, pixel W)−pixel X)>k THEN pixel X=black ELSE pixel X=white ENDIF.

The function "Max(pixel Z, pixel W)" returns the maximum value of pixel Z and W. The constant "k" represents the predetermined value, which value is chosen such that accuracy is optimized for the double-sided method.

The double-sided method of FIG. **4** is more reliable than the single-sided method of FIG. **3** since two neighbors are used to determined the color of pixel X, rather than one neighbor. This double comparison decreases the likelihood that pixel X will be compared to an unusually dark white neighbor, which may result in erroneously defining a black pixel X as white. However, the double-sided method is less convenient than the single-sided method since the coded object may be larger in size to accommodate the extra neighbor pixel and an extra comparison operation is required.

FIG. **5** is a flowchart illustrating a single-precision, single-color, combination method (combo method) of discriminating pixels in accordance with one embodiment of the present invention. This combo method combines the methods of FIG. **3** and FIG. **4**, and is more accurate and thereby is preferable to the methods of FIG. **3** and FIG. **4** of discriminating pixels. In this embodiment, for pixel X to be defined as black, pixel X has to be darker than the brightest white neighbor pixel by a predetermined value and at least darker than the lesser bright neighbor.

Initially, in operation **502** a maximum value of neighbor pixel Z and neighbor pixel W is determined. In this embodiment, pixel Z and pixel W are known white pixels. Next, in operation **504** a minimum value of pixel Z and pixel W is determined. In operation **506** a value of pixel X is compared to both the maximum value and the minimum value.

In operation **508**, it is determined whether the value of pixel X is smaller than the maximum value by more than a predetermined value. If the value of pixel X is not smaller than the maximum value by more than a predetermined value, pixel X is defined as white in operation **512**. If the value of pixel X is smaller than the maximum value by more than a predetermined value, it is determined whether the value of pixel X is smaller than the minimum value by more than zero in operation **510**. If the value of pixel X is not smaller the minimum value by more than zero, pixel X is defined as white in operation **512**. If the value of pixel X is smaller than the minimum value by more than zero, pixel X is defined as black in operation **514**.

This embodiment may be implemented, for example, by the following expression:

IF ((Min(pixel Z, pixel W)−pixel X)>0) & ((Max(pixel Z, pixel W))−pixel X)>k) THEN pixel X=black ELSE pixel X=white ENDIF.

The function "Min(pixel Z, pixel W)" returns the minimum value (or brightest) of pixel Z and W, and the function "Max(pixel Z, pixel W)" returns the maximum value of pixel Z and W. The constant "k" represents the predetermined value, which value is chosen such that accuracy is optimized for the combo method.

FIG. **6** is a flowchart illustrating a single-precision and double-color method of discriminating pixels in accordance with one embodiment of the present invention. In general, this method compares an unknown pixel X to a neighbor that is know to be white and a neighbor that is known to be black.

If pixel X is closer in color to the black neighbor, it is defined as a black pixel. If pixel X is closer in color to the white pixel, it is defined as a white pixel. The following techniques are one example of how the results of these comparisons may be analyzed.

Initially, in operation **602** a value of pixel X is compared to a value of neighbor pixel Z. Pixel Z is a known white neighbor pixel. In operation **604**, the value of pixel X is next compared to a value of neighbor pixel Y, which pixel Y has a known black color. After pixel X is compared to both neighbors, in operation **606** it is determined whether the difference between the values of pixels Z and X is greater than the difference between the values of pixels X and Y.

If the difference between the values of pixel Z and pixel X are greater than the difference between the values of pixel X and pixel Y, pixel X is defined as black in operation **610**. If the difference between the values of pixel Z and pixel X are not greater than the difference between the values of pixels X and pixel Y, pixel X is defined as white in operation **608**. This embodiment may be implemented, for example, by the following expression:

IF (pixel Z−pixel X)>(pixel X−pixel Y) THEN pixel X=black ELSE pixel X=white ENDIF.

FIG. **7** is a flowchart illustrating a double-precision method of discriminating a pixel in accordance with one embodiment of the present invention. For this method, coded objects are designed such that when pixel X is black then a neighbor pixel Z is white, and when pixel X is white then pixel Z is black. Thus, to determine the color of a pair of pixels that are designed for the double-precision method, each pixel is compared to the other pixel with the lower value pixel being defined as black and the higher value pixel being defined as white. Examples of types of coded objects, which may be used with this double-precision method, are described below with references to FIG. **12**, for example.

Initially, in operation **702** the value of pixel X is compared to the value of neighbor pixel Z. Pixel Z may be either black or white. Next, in operation **704** it is determined whether the value of pixel Z is greater than the value of pixel X. If pixel Z is greater than pixel X, pixel X is defined as black (pixel Z is white) in operation **706**. If pixel Z is not greater than pixel X, pixel X is defined as white (pixel Z is black) in operation **708**.

This embodiment may be implemented, for example, by the following expression:

IF (pixel Z)>(pixel X) THEN pixel X=black and pixel Z=white ELSE pixel X=white and pixel Z=black ENDIF.

Alternatively this embodiment may be implemented, for example, by the following expression:

IF (pixel Z−pixel X)>k THEN pixel X=black and pixel Z=white ELSEIF (pixel X−pixel Z)>k pixel X=white and pixel Z=black ENDIF.

The constant "k" is a predetermined constant, which value is chosen such that accuracy is optimized for the double-precision method. For most physical systems, the constant k may be set to zero, since a white pixel usually has a higher luminosity value than a black pixel under normal lighting conditions. However, the constant k may have to be set to a value other than zero under certain poor lighting conditions.

FIG. **8** is a flowchart illustrating a single-precision method of detecting the position of a particular object of the coded object in accordance with one embodiment of the present invention. Initially, in operation **802** all pixels in a region are compared. All pixels within the region, except pixel X have a particular color, and pixel X has an opposite color from the other pixels in the region. For example, if pixel X is black, the other pixels within the region are white. This difference in colors may be utilized to determine the position of pixel X. Pixel X is associated with the particular object; thus, the position of the particular object may be determined from the position of pixel X. Although the following method is described as determining the position of pixel X, of course, the position of a group of pixels (group X) may be determined so as to determine the position of the particular object by implementing a similar method.

In operation **804**, it is determined whether the region includes mostly white or black pixels. Of course, this operation **804** is not necessary when the color of the region is already known. If the region is mostly black, in operation **806** a maximum value within the region is determined, and the position of pixel X is defined in operation **808** as the position of the pixel having the maximum value. However, if the region is mostly white, in operation **810** a minimum value within the region is determined, and the position of pixel X is defined in operation **812** as the position of the pixel having the minimum value.

This embodiment may be implemented, for example, by the following expression:

IF (most region pixels=black) THEN position of pixel X=position of Max(pixels within the region) ENDIF IF (most region pixels=white) THEN position of pixel X=position of Min(pixels within the region) ENDIF.

Of course, those skilled in the art would realize that other expressions may be utilized for the single-precision positioning method.

FIG. **9** is a flowchart illustrating a double-precision method of detecting the position of a particular object of the coded object in accordance with one embodiment of the present invention. For example, the particular object may be movable within a region that includes a white neighbor pixel and a black neighbor pixel, the white neighbor pixel changes to a black pixel as the particular object moves over the white neighbor pixel. Likewise, the black neighbor pixel changes to white. Examples of this type of coded object, which may be used with this double-precision method, are described below with references to FIG. **14**, for example.

Initially, in operation **902** all pixels of a first half of a region are compared with associated pixels of a second half of the region. In this example, the first half pixels are mostly black (pixels Z), and the second half pixels are mostly white (pixels Y). Next, in operation **904** a difference between each pair of pixels Z and Y is determined. In operation **906**, a position of the particular object is defined as the pair of pixels Z and Y that has the minimum difference.

This embodiment may be implemented, for example, by the following expression:

IF ((pixels Z=black) & (pixels Y=white) THEN position of pixel X=Min(pixel Z−pixel Y) ENDIF.

Of course, those skilled in the art would realize that other expressions may be utilized for the double-precision positioning method.

FIG. **10** is a flowchart illustrating pattern detection and selection methods in accordance with one embodiment of the present invention. These methods are used to identify a particular pixel as being a possible reference pixel of a known code pattern. Additionally, these methods are used for determining which of the possible pixels (if more than one) more closely matches the reference pixel of the known code pattern.

Initially, in operation **1002** a region having an area that is equal to a known bar code pattern area is defined. Next, in operation **1004** an expected black pixel is compared to each expected white pixel. In operation **1006**, it is determined whether more than a predetermined number of expected white pixels have a value that is greater than a value of the expected black pixel. If the number is higher than the predetermined number, in operation **1008** the expected black pixel is defined as being a possible reference pixel of the known code pattern.

After the expected black pixel is defined as a possible reference pixel of the known code pattern, in operation **1010** it is determined whether more than one expected black pixel has been defined as a possible reference pixel of the known code pattern. If more than one possible reference pixel has been defined, in operation **1012** the expected black pixel that has the highest number of expected white pixels that have a value that is greater than a value of the expected black pixel is defined as the correct reference pixel of the known code pattern. The process ends in operation **1018**.

An alternative technique may include determining whether a sum of each luminosity value of each expected white pixel minus the luminosity value of the expected white pixel is greater than a predetermined value. Additionally, this embodiment may be utilized with minor changes to determine which white pixel is equivalent to the reference pixel. In this example, an expected white pixel is compared to a group of expected black pixels.

If it is determined in operation **1006** that a predetermined number of expected white pixels do not have a value that is greater than a value of the expected black pixel, the process proceeds to operation **1014** and another region is analyzed. In operation **1014**, it is determined whether all the regions have been analyzed. If all the regions have not been analyzed, the process proceeds to operation **1002**. If all the regions have been analyzed, it is determined that the reference pixel has not been found within the image in operation **1016**. Consequently, the process ends in operation **1018**.

The above described tracking methods may be implemented on various types of coded objects. For example, a coded object may include a reference object that is configured to take advantage of a double-precision pattern positioning method embodiment. A reference object that utilizes a double-precision detection embodiment will be recognized more accurately than a reference object that utilizes a single-precision positioning embodiment. The following coded objects include several features that are designed to utilize various tracking embodiments.

Additionally, the above-described tracking embodiments may be implemented to track coded objects that have a fixed position, as well as objects that are movable within the physical system or within a fixed region of the physical system. Several embodiments of fixed coded objects and movable coded objects are described in co-pending U.S. Patent application Ser. No. 09/018,023 filed concurrently herewith, which is incorporated herein by reference for all purposes.

FIG. **11** is a coded object **1100** in accordance with one embodiment of the present invention. The coded object **1100** includes a plurality of bits **1102**, a reference pixel **1104**, and a center pixel **1106**. The center pixel **1106** may be used to detect whether the coded object **1100** is present. The bits **1102** may be used to identify the coded object **1100**. The reference pixel **1104**, along with the center pixel **1106**, may be used to detect the orientation of the coded object.

Of course, any suitable configurations may be used for the center pixel **1106**, bits **1102**, and reference pixel **1104**, as long as the coded object may be tracked using the tracking methods of the present invention. For example, the center pixel may not be positioned within the center of the coded object **1100**.

The coded object **1100** is configured such that a variation of the combo single-precision method of FIG. **5** may be implemented to detect the presence of the coded object. The pixels that are positioned along a horizontal axis **1108** are analyzed, as well as along a vertical axis **1104**. For this type of coded object, a "valley" is expected in the luminosity values of the pixels along one of the axis. That is, the value of the center pixel **1106** will be at a lower value than any of the other pixels along the horizontal axis **1108**. The pixels of the coded object **1100** are analyzed for both the horizontal and vertical axis to increase the reliability of this method.

The bits **1102** are designed to utilize the double-precision discrimination method of FIG. **7**. That is, each bit includes a black pixel and a white pixel. For example, bit **1102***b* has a black pixel **1103***a* and a white pixel **1103***b*. The value of the bit **1102***b* may be determined by comparing pixel **1103***a* to pixel **1103***b*. The lowest value pixel is the black pixel, and the highest value pixel is the white pixel. The relative colors of each pixel **1103***a* and **1103***b* indicate the value of the bit **1102**. That is, different coded objects may have different relative colors and corresponding values for these bits **1102**.

FIG. **12** is a coded object **1200** having a rotating object **1212** in accordance with an alternative embodiment of the present invention. In other words, the coded object has a rotating object **1212** that may be rotated by the user, for example. The position of the rotating object **1212** may be determined by implementing the single-precision method of FIG. **8** of detecting a position of a black pixel within a mostly white region. In other words, a minimum value pixel is found within a circle **1214** of mostly white pixels. The position of the rotating object **1212** is defined as the position of a minimum value pixel within the circle **1214**.

The coded object **1200** also includes a code detection object **1202**. As shown, the code detection mechanism includes a black object **1216***a* beside a white neighbor object **1216***b*. When the coded object is added to the system, the black object **1216***a* moves over the white neighbor object **1216***b* and another white neighbor appears to the left of the black object **1216***a* (see **1102***d* of FIG. **11**). Thus, one may determine whether the coded object **1200** is present by comparing the luminosity values of the black object **1216***a* and the white object **1216***b*.

FIG. **13***a* is a circular coded object **1302** in accordance with an alternative embodiment of the present invention. The circular coded object **1302** has a white center **1306**, a black ring **1304**, and a white ring **1308**. To detect this code pattern **1302**, an embodiment of the pattern detection and selection methods of FIG. **10** are implemented. For example, a pixel in the center **1306** and pixels in the white ring **1308** are compared to pixels in the black ring **1304**. The coded object **1302** is detected when a particular number of pixels within the black ring **1304** are darker than pixels in the white ring **1308** and white center **1306**. Additionally, more than one center pixel **1306** may be compared with each of the pixels in the white ring **1308** and black ring **1304**, which additionally comparison would increase the reliability of detecting the correct coded object.

FIG. **13***b* is a circular coded object **1310** having a single-precision angle point **1312** in accordance with an alternative embodiment of the present invention. The single-precision angle point **1312** may be utilized to determine the orientation of the coded object **1310**, as well as bit locations and values within the coded object **1310**. Examples of different types of code bits are described in reference to FIGS. **13***c* through **13***e*.

An embodiment of the single-precision position detection method is implemented to detect the position of the angle point **1312** within a region **1316**. As shown, the region **1316** includes mostly black pixels. The black pixels and the angle point **1312** form a ring around the perimeter of the code **1310**. The angle point **1312** is defined as the lightest pixel in the region **1316**.

FIG. **13***c* is a circular coded object **1320** having a double-precision angle point **1322** in accordance with an alternative embodiment of the present invention. The double-precision angle point **1322** includes a white pixel **1322***b* that is located within a black ring region **1324***b*, and a black pixel **1322***a* that is located in within a white ring region **1324***a*. The coded object **1320** is more robust than the coded object **1310** having the single-precision angle point. The double-precision angle point **1322** increases the likelihood that the angle point **1322** will be detected correctly.

The position of the angle point is determined by comparing the pixels in the white ring region **1324***a* to adjacent pixels in the black ring region **1324***b*. That is, a double-precision positioning method is used that is described in reference to FIG. **9**. For example, a pixel in the white ring region **1324***a* is subtracted from an adjacent pixel in the black ring region **1324***b*, wherein each pair is located along a radial line that goes through a center of the coded object **1320** at a particular angle. This calculation is repeated for each pair of pixels within the white ring region **1324***a* and the black ring region **1324***b*. The position of the angle point **1322** is defined as the pair of pixels that result in a minimum subtraction value. In other words, the subtraction value for the angle point **1322** (a black pixel minus a white pixel) will be less than for all other pixel pairs within the ring regions (a white pixel minus a black pixel).

FIG. **13***d* is a circular coded object **1330** having a single-precision angle point **1332** and double-precision bits **1334** in accordance with an alternative embodiment of the present invention. Each of the double-precision bits **1334** include a white region and a black region. For example, a first bit is in the form of a white region **1334***a* and a black region **1334***b*. The bits are used to identify the coded object type, for example, with each particular coded object type having a different bit value arrangement.

The value of each bit is determined by reading the value of each subregion within the bit (e.g., **1334***a* and **1334***b*). The double-precision discrimination method may be used to determine the value of each bit. In other words, each bit includes a white pixel that is adjacent to a black pixel, the color of each pixel may be ascertained by comparing luminosity values of pixels **1334***a* and **1334***b*.

FIG. **13***e* is a circular coded object **1340** having a double-precision angle point **1342** and single-precision bits **1344** in accordance with an alternative embodiment of the present invention. This embodiment may result in a smaller code pattern size than the coded object **1330** having the double-precision bits since the single-precision bits of coded object **1340** requires one less ring region.

In this embodiment, one of the single-precision discrimination methods may be utilized for determining the value of each bit **1344** of code pattern **1340**. For example, the color of each bit **1344** may be determined by utilizing the single-precision, double-color discrimination method of FIG. **6**. Each bit is compared to a white neighbor pixel and a black neighbor pixel.

The angle point **1342** may be utilized as white and black neighbor pixels, for example. First, the position of the angle point **1342** is determined by utilizing the double-precision positioning method of FIG. **9**, for example. That is, the lightest pixel **1342***b* within a black ring region **1346** is defined as the white neighbor pixel, and the darkest pixel within the a white ring region **1348** is defined as the black neighbor pixel. After the neighbor pixels are determined, each bit is compared to both the white pixel **1342***b* and the black pixel **1342***a* in a double-color discrimination method of FIG. **6** to determine the value of each bit.

FIG. **14** is a coded object **1400** that includes a double-precision movable object that includes a white pixel **1402***b* and a black pixel **1402***a* in accordance with an alternative embodiment of the present invention. The coded object **1400** includes a mostly white half **1402** and a mostly black half **1404**. The white pixel **1402***b* of the movable object is part of the mostly black half **1402**. Likewise, the black pixel **1404***b* of the movable object is part of the mostly white half **1404**.

The movable object (**1402***a* and **1404***a*) is slidably movable within the halves **1402** and **1404**. For example, a user may move the movable object from the left side of the halves to the right side. As the movable object passes through each half, the pixels of each half change colors. In other words, each of the movable object pixels (**1402***b* and **1404***b*) has a color that is a reverse of most pixels within the associated half.

The coded object **1400** of FIG. **14** is one example of a coded object that may utilize the double-precision positioning method of FIG. **9** to determine the position of the movable object. For example, each pixel in the mostly white half **1404** is subtracted from each pixel in the mostly black half **1402**. The position of the pair of pixels that result in a minimum value are defined as the position of the movable object (**1402***b* and **1402***a*).

The coded object recognition system of the present invention has many advantages over conventional bar-code recognition systems. If one wanted to track and identify many coded physical objects within a physical system, such as an interactive game board, the image resolution and lighting conditions would sometimes be inadequate for conventional code recognition systems to function properly. That is, since the interactive game board is designed for home use, the lighting conditions will radically vary.

For example, the lighting conditions could result in few levels of gray, which would make it difficult to distinguish black from white and thereby to recognize whether a code is present. Additionally, conventional code systems would require an expensive camera that has a high dynamic range in order to adjust for inadequate lighting conditions, for example. Since an image of the physical system may contain many coded objects, the resolution for each coded object may be relatively low. In contrast to conventional systems, the present invention will recognize codes even, for example, with variable lighting conditions, low resolution parameters, and low dynamic range cameras.

Additionally, since the code recognition techniques of the present invention include relatively simple calculations, the present invention may be implemented on a relatively low-end, low-cost processor. That is, the techniques of the present invention minimize the number of floating point operations that are required to track coded objects. Thus, the present invention may also be implemented in real time for a game application, for example.

FIG. **15** is a flowchart illustrating the process **108** of FIG. **1** of tracking the non-coded objects in accordance with one embodiment of the present invention. Process **108** may be eliminated if no non-coded objects are present or if it is not desirable to track non-coded objects. However, in some applications, it may be desirable to track non-coded objects, such as the user's hand.

Initially, in operation **1501**, all non-coded objects are located within each image or frame. This location operation is accomplished by conventional object location techniques. A well known method for locating non-coded objects within an image is to utilize thresholding and segmentation techniques. Additional object location techniques are described in co-pending U.S. patent application Ser. No. 08/675,104 filed Jul. 3, 1995 entitled, "Video Camera Based Computer Input System With Interchangeable Physical Interface" by Piernot, et al., and which is herein incorporated by reference.

After the objects are located for each frame, the objects are matched or linked in successive frames in operations **1502** through **1508**. FIG. **16** is a diagrammatic representation of two successive frames having multiple non-coded objects that are to be matched in accordance with one embodiment of the present invention. FIG. **16** will be described in conjunction with the flowchart of FIG. **15**. In general, particular objects are identified and distinguished from all other objects in each successive frame so that each object's movement may be accurately tracked from frame to frame.

In FIG. **16**, a first frame **1602** has a first object **1608** and a second object **1610**. In a second frame **1604**, the objects **1608** and **1610** have moved to one of two positions **1612** and **1614**. For example, object **1612** of the second frame **1604** is either object **1608** or **1610** of the first frame **1602**. The second frame is represented by two possible interpretations, **1604***a* and **1604***b*. The first interpretation **1604***a* represents the matching of object **1608** of the first frame **1602** to object **1614** of the second frame **1604**, while the second interpretation **1604***b* represents the matching of the object **1608** of the first frame **1602** with the object **1612** of the second frame **1604**.

To track the objects from the first frame **1602** to the second frame **1604**, initially, in operation **1502** each object from the first frame **1602** is matched with an object in the second frame **1604**. For example, interpretation **1604***a* is chosen as the second frame. Object **1608** of the first frame **1602** is matched with object **1614** of the second frame **1604**. Likewise, object **1610** of the first frame **1602** is matched with object **1612** of the second frame **1604**. Next, in operation **1404**, a sum of the distances between the paired objects is calculated. For interpretation **1604***a*, the sum is equal to distance d1 plus d2. For example, distance d1 represents the distance that object **1608** would have moved if object **1608** is identified as object **1614**.

After the sum of distances between matched objects is calculated for one set of paired objects or interpretation (e.g., **1604***a* or **1604***b*), it is determined whether any other combinations of paired objects is possible in operation **1506**. That is, it is determined whether it is possible to match each of the objects of the first frame to different objects in the second frame. If it is possible to match different objects, then the operation **1502** is repeated for a different interpretation (e.g., **1604***b*) of the second frame. For instance, object **1608** of the first frame **1602** is matched with the object **1612** of the second frame **1604**. Next, in operation **1404**, a second sum is calculated for the new matched combinations as shown in interpretation **1604***b* (e.g., d3 plus d4).

If it is determined that it is not possible to match each of the objects of the first frame to different objects of the second frame, the process **1506** proceed to operation **1508**. In the example of FIG. **15**, no other possible matches are possible, so operation **1508** is executed. In operation **1508**, it is determined which combination results in a minimum sum. In other words, it is determined which combination of matched pairs results in the least amount of distance moved. As shown in FIG. **16**, when object **1608** is matched with object **1612** of the second frame **1604** and object **1610** is matched with the object **1614** of the second frame **1604**, the sum is equal to d3 plus d4 as shown in interpretation **1604***b*. This sum is, of course, less than the sum of the distances (d1 plus d2) if object **1608** were matched with object **1614** of the second frame **1604***a* and object **1610** were matched with object **1612** of the second frame **1604***a*. Thus, it is concluded that object **1608** of the first frame **1602** is the same as object **1612** of the second frame, and has moved distance d1. This tracking method has the advantage of being a fast and effective way of tracking non-coded objects.

Although the foregoing invention has been described in some detail for purposes of clarity of understanding, it will be apparent that certain changes and modifications may be practiced within the scope of the appended claims. For example, the techniques for tracking coded objects of the present invention may be implemented by comparing RGB values, rather than luminosity values. By way of another example, the techniques for tracking non-coded objects may compare sizes or colors of objects of a first frame to sizes or colors of objects of a second frame. Accordingly, the present embodiments are to be considered as illustrative and not restrictive, and the invention is not to be limited to the details given herein, but may be modified within the scope and equivalents of the appended claims.

What is claimed is:

1. A method of characterizing a coded object having a plurality of regions, the method comprising:

comparing a luminosity value of a first region of the coded object to a luminosity value of a second region of the coded object, wherein the second region's color is known; and

determining the first region's color based on the comparison of the first and second region's luminosity values.

2. A method as recited in claim **1**, further comprising:

comparing luminosity values of all other regions of the coded object to the second region's luminosity value;

determining each region's color based on the comparison of each region's luminosity value to the second region's luminosity value, wherein the plurality of region colors form a pattern; and

matching the pattern of region colors to a known coded object's pattern of region colors to thereby determine the coded object's identity.

3. A method as recited in claim **1**, wherein

the second region's color is known to be white,

it is determined that the first region's color is white when the first region's luminosity value is not less than the second region's luminosity value by more than a predetermined constant k, and

it is determined that the first region's color is black when the first region's luminosity value is less than the second region's luminosity value by more than a predetermined value.

4. A method as recited in claim **1**, further comprising selecting the second region from two reference regions that are known to be white, the reference region having the highest luminosity value of the two reference regions being selected as the second region.

5. A method as recited in claim **4**, further comprising:

comparing the first region's luminosity value to the nonselected reference region,

wherein it is only determined that the first region's color is black when the first region's luminosity value is also less than the nonselected reference region's luminosity value.

6. A method as recited in claim 1, wherein

the second region's color is known to be black,

it is determined that the first region's color is white when the first region's luminosity value is greater than the second region's luminosity value by more than a predetermined value, and

it is determined that the first region's color is black when the first region's luminosity value is not greater than the second region's luminosity value by more than a predetermined value.

7. A method as recited in claim 1, further comprising selecting the second region from two reference regions that are known to be black, the reference region having the lowest luminosity value of the two reference regions being selected as the second region.

8. A method as recited in claim 4, further comprising:

comparing the first region's luminosity value to the nonselected reference region,

wherein it is only determined that the first region's color is white when the first region's luminosity value is also greater than the nonselected reference region's luminosity value.

9. A method as recited in claim 1, wherein

the first region's color is known to be selected from a group consisting of black and white and the second region's color is known to be an opposite of the first region's color,

it is determined that the first region's color is black when the first region's luminosity value is not greater than the second region's luminosity value, and

it is determined that the first region's color is white when the first region's luminosity value is greater than the second region's luminosity value.

10. A method as recited in claim 1, further comprising:

comparing the first region's luminosity value to a luminosity value of a third region of the coded object, wherein the third region's color is known,

wherein the second region's color is known to be white and the third region's color is known to be black,

it is determined that the first region's color is black when a difference between the luminosity values of the first and second regions is greater than a difference between the luminosity values of the first and third regions, and

it is determined that the first region's color is white when a difference between the luminosity values of the first and second regions is not greater than a difference between the luminosity values of the first and third regions.

11. A method of characterizing a coded object having a first region, the first region having a first subregion having a first color and a second subregion having second color that differs from the first color, wherein the first subregion is movable over a portion of the second subregion, the method comprising:

when the second subregion has a white color, comparing the first regions luminosity values at a plurality of positions and defining the first subregion's position as the position of the minimum luminosity value within the first region; and

when the second subregion has a black color, comparing the first regions luminosity values at a plurality of positions and defining the first subregion's position as the position of the maximum luminosity value within the first region.

12. A method of characterizing a coded object having a white region and a black region, the first and second regions being substantially adjacent, an object being partially within the first region and partially within the second region, the object portion within the first region being white, the object portion within the second region being black, the method comprising:

subtracting luminosity values of the white region from luminosity values of the black region at a plurality of positions; and

defining the object's position as the position of the luminosity value pair that has a minimum difference.

13. A method of characterizing a coded object having a first region and a second region, the first region a majority of subregions with a first color and the second regions having a majority of subregions with a second color that differs from the first color, the method comprising:

(a) comparing luminosity values of a selected subregion within the first region to each subregion within the second region;

(b) when a number of luminosity values of the subregions within the second region differ from a luminosity value of the selected subregion by more than a predetermined value, defining the selected subregion as a reference subregion; and

(c) when a number of luminosity values of the subregions within the second region does not differ from a luminosity value of the selected subregion by more than a predetermined value, selected a next subregion within the first region and repeating steps (a) and (b) if there is a next subregion within the first region.

14. A method as recited in claim 13, further comprising when there is not a next subregion within the first region, defining a third and fourth region within the coded object as the first and second regions and repeating steps (a) through (c).

15. A coded object comprising a plurality of bit objects that each have at least a first region adjacent to a second region, the first region having a different color than the second region, and the relative positions of the first and second region's color for each of the bit object indicating an identity of the coded object.

16. A coded object as recited in claim 15, further comprising a center object having a predefined color so that the coded object's presence is detectable via the center object.

17. A coded object as recited in claim 16, further comprising a reference object by which the coded object's orientation is determinable from the center object's and reference object's relative positions.

18. A coded object as recited in claim 17, wherein the center object, the subregions of the bit objects, and the reference objects' colors are selected from a group consisting of black and white.

19. A coded object as recited in claim 15, wherein the subregions of the bit objects' colors are selected from a group consisting of black and white.

20. A coded object as recited in claim 15, further comprising a movable object that is capable of being moved over a third region of the coded object, the movable object's color being different than the third region's color to facilitate determination of the movable object's position relative to the third region.

21. A coded object as recited in claim 20, wherein the subregions of the bit objects and the movable objects' colors are selected from a group consisting of black and white.

22. A coded object as recited in claim 21, wherein half of the movable object is white and another half of the movable object is black, the white half of the movable object being

movable over a black half of the third region and the black half of the movable object being movable over a white half of the third region.

23. A coded object as recited in claim **20**, wherein a first half of the movable object is movable over a first half of the third region having a same color as a second half of the movable object, the second half of the movable object being movable over a second half of the third region that has a same color as the first half of the movable object.

24. A computer readable medium containing instructions for characterizing a coded object having a plurality of regions, the computer readable medium comprising:

computer code for comparing a luminosity value of a first region of the coded object to a luminosity value of a second region of the coded object, wherein the second region's color is known; and

computer code for determining the first region's color based on the comparison of the first and second region's luminosity values.

25. A computer readable medium as recited in claim **24**, wherein

the second region's color is known to be white,

it is determined that the first region's color is white when the first region's luminosity value is not less than the second region's luminosity value by more than a predetermined constant k, and

it is determined that the first region's color is black when the first region's luminosity value is less than the second region's luminosity value by more than a predetermined value.

26. A computer readable medium as recited in claim **25**, the computer readable medium further comprising computer code for selecting the second region from two reference regions that are known to be white, the reference region having the highest luminosity value of the two reference regions being selected as the second region.

27. A computer readable medium as recited in claim **26**, the computer readable medium further comprising:

computer code for comparing the first region's luminosity value to the nonselected reference region,

wherein it is only determined that the first region's color is black when the first region's luminosity value is also less than the nonselected reference region's luminosity value.

28. A computer readable medium as recited in claim **24**, wherein

the first region's color is known to be selected from a group consisting of black and white and the second region's color is known to be an opposite of the first region's color,

it is determined that the first region's color is black when the first region's luminosity value is not greater than the second region's luminosity value, and

it is determined that the first region's color is white when the first region's luminosity value is greater than the second region's luminosity value.

29. A computer readable tedium as recited in claim **24**, the computer readable medium further comprising:

computer code for comparing the first region's luminosity value to a luminosity value of a third region of the coded object, wherein the third region's color is known,

wherein the second region's color is known to be white and the third region's color is known to be black,

it is determined that the first region's color is black when a difference between the luminosity values of the first and second regions is greater than a difference between the luminosity values of the first and third regions, and

it is determined that the first region's color is white when a difference between the luminosity values of the first and second regions is not greater than a difference between the luminosity values of the first and third regions.

30. A computer readable medium containing instructions for characterizing a coded object having a first region, the first region having a first subregion having a first color and a second subregion having second color that differs from the first color, wherein the first subregion is movable over a portion of the second subregion, the computer readable medium comprising:

computer code for comparing the first regions luminosity values at a plurality of positions and defining the first subregion's position as the position of the minimum luminosity value within the first region when the second subregion has a white color; and

computer code for comparing the first regions luminosity values at a plurality of positions and defining the first subregion's position as the position of the maximum luminosity value within the first region when the second subregion has a black color.

31. A computer readable medium containing instructions for characterizing a coded object having a white region and a black region, the first and second regions being substantially adjacent, an object being partially within the first region and partially within the second region, the object portion within the first region being white, the object portion within the second region being black, the computer readable medium comprising:

computer code for subtracting luminosity values of the white region from luminosity values of the black region at a plurality of positions; and

computer code for defining the object's position as the position of the luminosity value pair that has a minimum difference.

32. A computer readable medium containing instructions for characterizing a coded object having a first region and a second region, the first region a majority of subregions with a first color and the second regions having a majority of subregions with a second color that differs from the first color, the computer readable medium comprising:

computer code for (a) comparing luminosity values of a selected subregion within the first region to each subregion within the second region;

computer code for (b) when a number of luminosity values of the subregions within the second region differ from a luminosity value of the selected subregion by more than a predetermined value, defining the selected subregion as a reference subregion; and

computer code for (c) when a number of luminosity values of the subregions within the second region does not differ from a luminosity value of the selected subregion by more than a predetermined value, selected a next subregion within the first region and repeating steps (a) and (b) if there is a next subregion within the first region.

* * * * *

SPE RESPONSE FOR CERTIFICATE OF CORRECTION

Paper No.: _____

DATE : 02/26/10

TO SPE OF : ART UNIT 2857

SUBJECT : Request for Certificate of Correction for Appl. No.: 09017450 Patent No.: 6151564

Please respond to this request for a certificate of correction within 7 days.

FOR IFW FILES:

Please review the requested changes/corrections as shown in the **COCIN** document(s) in the IFW application image. No new matter should be introduced, nor should the scope or meaning of the claims be changed.

Please complete the response (see below) and forward the completed response to scanning using document code **COCX**.

FOR PAPER FILES:

Please review the requested changes/corrections as shown in the attached certificate of correction. Please complete this form (see below) and forward it with the file to:

Certificates of Correction Branch (C of C)
Randolph Square 9D40-E
Palm Location 7580

You can fax the Director's/SPE response to 571-272-9965

Omega Lewis
Certificates of Correction Branch
703-756-1575

Thank You For Your Assistance

The request for issuing the above-identified correction(s) is hereby:
Note your decision on the appropriate box.

- ☒ **Approved** — All changes apply.
- ☐ **Approved in Part** — Specify below which changes **do not** apply.
- ☐ **Denied** — State the reasons for denial below.

Comments: _____

ELISEO RAMOS-FELICIANO
~~SUPERVISORY PATENT EXAMINER~~
SPE

2857
Art Unit

UNITED STATES
PATENT AND
TRADEMARK OFFICE

UNDER SECRETARY OF COMMERCE FOR INTELLECTUAL PROPERTY AND
DIRECTOR OF THE UNITED STATES PATENT AND TRADEMARK OFFICE
WASHINGTON, D.C. 20231
WWW.USPTO.GOV

ANDREA JO KAMAGE
1100 NEW YORK AVENUE, N.W.
SUITE 600
WASHINGTON, D.C. 20005-3934

In re Application of	:
Ji et al	:
Serial No.: 09/017,715	: PETITION DECISION
Filed: 3 February 1998	:
Attorney Docket No.: 1488.0810003	:

This is in response to applicants' petition filed under 37 CFR 1.144 on 10 August 2001, to request that the restriction Requirement be withdrawn.

A review of the file shows that the originally filed claims were restricted into three groups as set forth below, in Office action mailed 6/7/99 as Paper no 7.

Group I	Claims 1-9, 13 drawn to a polynucleotide
Group II	Claims 10-11, 14 drawn to a polypeptide
Group III	Claim 12, drawn to an antibody

Applicant elected Group I with traverse in Paper no 9, filed 7/21/99. The traverse concerned the search burden of examining both Groups I and II. In Paper no 11, filed 7/23/99, Applicant canceled claims 1-9 and 13 and added new claims 16-78, drawn to polynucleotides comprising fragments of SEQ ID NO 1 and claim 79, drawn to polynucleotides comprising fragments of SEQ ID NO 12. Applicants stated that Claims 16-79 represent the invention of Group I.

The Examiner responded to the traverse and made the restriction final in Office Action mailed 9/22/99 as Paper no 12. Newly submitted claim 79 was withdrawn from examination as being directed to an invention that is independent or distinct from the invention as originally claimed. Elected Group 1 (original claims 1-9 and 13; replaced with new claims 16-78) is drawn to a polynucleotide product, SEQ ID NO: 1. In contrast, new claim 79 is drawn to a materially different polynucleotide product, SEQ ID NO: 12.

The Petition first submits that a reasonable number of independent and distinct nucleotide sequences, usually up to ten, are permitted to be claimed in a single application and refers

to the OG Notice of 19 November 1996 and MPEP 803.04. It is noted that the claims as originally filed were drawn to SEQ ID No 1. Claims directed to SEQ ID NO; 12 were properly withdrawn as being directed to a materially different invention from the one originally claimed. Additionally, the O.G. Notice set for a range of sequences that were permitted, not required, to be examined. One sequence is within that range.

The Petition further states that SEQ ID NO: 1 and SEQ ID NO: 12 may be patentably distinct. This statement does not clearly meet the level of evidence required by MPEP 2434, to show that the different nucleotide sequences do not cover independent and distinct inventions. Applicants are reminded that they may petition under 37 CFR 1.181 for examination of additional sequences by providing such evidence.

Therefore the petition is DENIED.

Should there be any questions with regard to this decision, please contact Julie E. Burke, Ph.D. by letter addressed to the Group Director, Technology Center 1600, Washington, DC 20231, or by telephone at (703) 308-7553 or by facsimile transmission at (703) 305-7939.

John Doll
Group Director
Technology Center 1600

UNITED STATES PATENT AND TRADEMARK OFFICE

Commissioner for Patents
United States Patent and Trademark Office
P.O. Box 1450
Alexandria, VA 22313-1450
www.uspto.gov

In re Patent No. 5841622
Issue Date: November 24,1998
Application No. 09018268
Filed: February 4,1998
Attorney Docket No. JMC-2

:
:DECISION GRANTING PETITION
:UNDER 37 CFR 1.378(c)
:

This is a decision on the electronic petition, filed August 6,2007 ,under 37 CFR 1.378(c) to accept the unintentionally delayed payment of the 7.5 year maintenance fee for the above-identified patent.

The petition is GRANTED.

The maintenance fee is accepted, and the above-identified patent reinstated as of August 6,2007 . This decision also constitutes notice that the fee has been accepted. An electronic copy of the petition and this decision has been created as an entry in an Image File Wrapper. Nevertheless, petitioner should print and retain an independent copy

Telephone inquires related to this electronic decision should be directed to the Electronic Business Center at 1-866-217-9197.

Under the Paperwork Reduction Act of 1995, no persons are required to respond to a collection of information unless it displays valid OMB control number.

PETITION TO ACCEPT UNINTENTIONALLY DELAYED PAYMENT OF MAINTENANCE FEE IN AN EXPIRED PATENT (37 CFR 1.378(c))

Patent Number	Issue Date (YYYY-MM-DD)	Application Number	Filing Date (YYYY-MM-DD)	Docket Number (if applicable)
5841622	1998-11-24	09018268	1998-02-04	JMC-2

CAUTION: Maintenance fee (and surcharge, if any) payment must correctly identify: (1) the patent number and (2) the application number of the actual U.S. application leading to issuance of that patent to ensure the fee(s) is/are associated with the correct patent. 37 CFR 1.366(c) and (d).

SMALL ENTITY
☒ Patentee claims, or has previously claimed, small entity status. See 37 CFR 1.27.

LOSS OF ENTITLEMENT TO SMALL ENTITY STATUS
☐ Patentee is no longer entitled to small entity status. See 37 CFR 1.27(g)

NOT Small Entity		Small Entity	
Fee	Code	Fee	Code
○ 3 ½ year	(1551)	○ 3 ½ year	(2551)
○ 7 ½ year	(1552)	◉ 7 ½ year	(2552)
○ 11 ½ year	(1553)	○ 11 ½ year	(2553)

SURCHARGE
The surcharge required by 37 CFR 1.20(i)(2) (Fee Code 1558) must be paid as a condition of accepting unintentionally delayed payment of the maintenance fee.

MAINTENANCE FEE (37 CFR 1.20(e)-(g))
The appropriate maintenance fee must be submitted with this petition.

STATEMENT
THE UNDERSIGNED CERTIFIES THAT THE DELAY IN PAYMENT OF THE MAINTENANCE FEE TO THIS PATENT WAS UNINTENTIONAL

PETITIONER(S) REQUEST THAT THE DELAYED PAYMENT OF THE MAINTENANCE FEE BE ACCEPTED AND THE PATENT REINSTATED

THIS PORTION MUST BE COMPLETED BY THE SIGNATORY OR SIGNATORIES

37 CFR 1.378(d) states: "Any petition under this section must be signed by an attorney or agent registered to practice before the Patent and Trademark Office, or by the patentee, the assignee, or other party in interest."

I certify, in accordance with 37 CFR 1.4(d)(4) that I am

◉ An attorney or agent registered to practice before the Patent and Trademark Office

○ A sole patentee

○ A joint patentee; I certify that I am authorized to sign this submission on behalf of all the other patentees.

○ A joint patentee; all of whom are signing this e-petition

○ The assignee of record of the entire interest

Patent Practitioner			
A signature of the applicant or representative is required in accordance with 37 CFR 1.33 and 10.18. Please see 37 CFR 1.4(d) for the form of the signature			
Signature	/Leonard Tachner/	Date (YYYY-MM-DD)	2007-08-06
Name	Leonard Tachner	Registration Number	26344

This collection of information is required by 37 CFR 1.378(c). The information is required to obtain or retain a benefit by the public which is to file (and by the USPTO to process) an application. Confidentiality is governed by 35 U.S.C. 122 and 37 CFR 1.11 and 1.14. This collection is estimated to take 1 hour to complete, including gathering, preparing, and submitting the completed application form to the USPTO. Time will vary depending upon the individual case. Any comments on the amount of time you require to complete this form and/ or suggestions for reducing this burden, should be sent to the Chief Information Officer, U.S. Patent and Trademark Office, U.S. Department of Commerce, P.O. Box 1450, Alexandria, VA 22313-1450. DO NOT SEND FEES OR COMPLETED FORMS TO THIS ADDRESS. **This form can only be used when in conjunction with EFS-Web. If this form is mailed to the USPTO, it may cause delays in reinstating the patent.**

Privacy Act Statement

The Privacy Act of 1974 (P.L. 93-579) requires that you be given certain information in connection with your submission of the attached form related to a patent application or patent. Accordingly, pursuant to the requirements of the Act, please be advised that: (1) the general authority for the collection of this information is 35 U.S.C. 2(b)(2); (2) furnishing of the information solicited is voluntary; and (3) the principal purpose for which the information is used by the U.S. Patent and Trademark Office is to process and/or examine your submission related to a patent application or patent. If you do not furnish the requested information, the U.S. Patent and Trademark Office may not be able to process and/or examine your submission, which may result in termination of proceedings or abandonment of the application or expiration of the patent.

The information provided by you in this form will be subject to the following routine uses:

1. The information on this form will be treated confidentially to the extent allowed under the Freedom of Information Act (5 U.S.C. 552) and the Privacy Act (5 U.S.C. 552a). Records from this system of records may be disclosed to the Department of Justice to determine whether the Freedom of Information Act requires disclosure of these record s.

2. A record from this system of records may be disclosed, as a routine use, in the course of presenting evidence to a court, magistrate, or administrative tribunal, including disclosures to opposing counsel in the course of settlement negotiations.

3. A record in this system of records may be disclosed, as a routine use, to a Member of Congress submitting a request involving an individual, to whom the record pertains, when the individual has requested assistance from the Member with respect to the subject matter of the record.

4. A record in this system of records may be disclosed, as a routine use, to a contractor of the Agency having need for the information in order to perform a contract. Recipients of information shall be required to comply with the requirements of the Privacy Act of 1974, as amended, pursuant to 5 U.S.C. 552a(m).

5. A record related to an International Application filed under the Patent Cooperation Treaty in this system of records may be disclosed, as a routine use, to the International Bureau of the World Intellectual Property Organization, pursuant to the Patent Cooperation Treaty.

6. A record in this system of records may be disclosed, as a routine use, to another federal agency for purposes of National Security review (35 U.S.C. 181) and for review pursuant to the Atomic Energy Act (42 U.S.C. 218(c)).

7. A record from this system of records may be disclosed, as a routine use, to the Administrator, General Services, or his/her designee, during an inspection of records conducted by GSA as part of that agency's responsibility to recommend improvements in records management practices and programs, under authority of 44 U.S.C. 2904 and 2906. Such disclosure shall be made in accordance with the GSA regulations governing inspection of records for this purpose, and any other relevant (i.e., GSA or Commerce) directive. Such disclosure shall not be used to make determinations about individuals.

8. A record from this system of records may be disclosed, as a routine use, to the public after either publication of the application pursuant to 35 U.S.C. 122(b) or issuance of a patent pursuant to 35 U.S.C. 151. Further, a record may be disclosed, subject to the limitations of 37 CFR 1.14, as a routine use, to the public if the record was filed in an application which became abandoned or in which the proceedings were terminated and which application is referenced by either a published application, an application open to public inspections or an issued patent.

9. A record from this system of records may be disclosed, as a routine use, to a Federal, State, or local law enforcement agency, if the USPTO becomes aware of a violation or potential violation of law or regulation.

UNITED STATES PATENT AND TRADEMARK OFFICE

Commissioner for Patents
United States Patent and Trademark Office
P.O. Box 1450
Alexandria, VA 22313-1450
www.uspto.gov

In re Patent No. 6028668
Issue Date: February 22,2000
Application No. 09018538
Filed: February 4,1998
Attorney Docket No. 95CR106/KE

:
:DECISION GRANTING PETITION
:UNDER 37 CFR 1.378(c)
:

This is a decision on the electronic petition, filed June 26,2008 ,under 37 CFR 1.378(c) to accept the unintentionally delayed payment of the 7.5 year maintenance fee for the above-identified patent.

The petition is GRANTED.

The maintenance fee is accepted, and the above-identified patent reinstated as of June 26,2008 . This decision also constitutes notice that the fee has been accepted. An electronic copy of the petition and this decision has been created as an entry in an Image File Wrapper. Nevertheless, petitioner should print and retain an independent copy

Telephone inquires related to this electronic decision should be directed to the Electronic Business Center at 1-866-217-9197.

Approved for use through 04/30/2009. OMB 0651-0016
U.S. Patent and Trademark Office: U.S. DEPARTMENT OF COMMERCE
Under the Paperwork Reduction Act of 1995, no persons are required to respond to a collection of information unless it displays valid OMB control number.

PETITION TO ACCEPT UNINTENTIONALLY DELAYED PAYMENT OF MAINTENANCE FEE IN AN EXPIRED PATENT (37 CFR 1.378(c))

Patent Number	Issue Date (YYYY-MM-DD)	Application Number	Filing Date (YYYY-MM-DD)	Docket Number (if applicable)
6028668	2000-02-22	09018538	1998-02-04	95CR016/KE

CAUTION: Maintenance fee (and surcharge, if any) payment must correctly identify: (1) the patent number and (2) the application number of the actual U.S. application leading to issuance of that patent to ensure the fee(s) is/are associated with the correct patent. 37 CFR 1.366(c) and (d).

SMALL ENTITY
☐ Patentee claims, or has previously claimed, small entity status. See 37 CFR 1.27.

LOSS OF ENTITLEMENT TO SMALL ENTITY STATUS
☐ Patentee is no longer entitled to small entity status. See 37 CFR 1.27(g)

NOT Small Entity		Small Entity	
Fee	Code	Fee	Code
○ 3 ½ year	(1551)	○ 3 ½ year	(2551)
◉ 7 ½ year	(1552)	○ 7 ½ year	(2552)
○ 11 ½ year	(1553)	○ 11 ½ year	(2553)

SURCHARGE
The surcharge required by 37 CFR 1.20(i)(2) (Fee Code 1558) must be paid as a condition of accepting unintentionally delayed payment of the maintenance fee.

MAINTENANCE FEE (37 CFR 1.20(e)-(g))
The appropriate maintenance fee must be submitted with this petition.

STATEMENT
THE UNDERSIGNED CERTIFIES THAT THE DELAY IN PAYMENT OF THE MAINTENANCE FEE TO THIS PATENT WAS UNINTENTIONAL

PETITIONER(S) REQUEST THAT THE DELAYED PAYMENT OF THE MAINTENANCE FEE BE ACCEPTED AND THE PATENT REINSTATED

THIS PORTION MUST BE COMPLETED BY THE SIGNATORY OR SIGNATORIES

37 CFR 1.378(d) states: "Any petition under this section must be signed by an attorney or agent registered to practice before the Patent and Trademark Office, or by the patentee, the assignee, or other party in interest."

I certify, in accordance with 37 CFR 1.4(d)(4) that I am

◉ An attorney or agent registered to practice before the Patent and Trademark Office

○ A sole patentee

○ A joint patentee; I certify that I am authorized to sign this submission on behalf of all the other patentees.

○ A joint patentee; all of whom are signing this e-petition

○ The assignee of record of the entire interest

Patent Practitioner			
A signature of the applicant or representative is required in accordance with 37 CFR 1.33 and 10.18. Please see 37 CFR 1.4(d) for the form of the signature			
Signature	//keppele//	Date (YYYY-MM-DD)	2008-06-26
Name	Kyle Eppele	Registration Number	34155

This collection of information is required by 37 CFR 1.378(c). The information is required to obtain or retain a benefit by the public which is to file (and by the USPTO to process) an application. Confidentiality is governed by 35 U.S.C. 122 and 37 CFR 1.11 and 1.14. This collection is estimated to take 1 hour to complete, including gathering, preparing, and submitting the completed application form to the USPTO. Time will vary depending upon the individual case. Any comments on the amount of time you require to complete this form and/ or suggestions for reducing this burden, should be sent to the Chief Information Officer, U.S. Patent and Trademark Office, U.S. Department of Commerce, P.O. Box 1450, Alexandria, VA 22313-1450. DO NOT SEND FEES OR COMPLETED FORMS TO THIS ADDRESS. **This form can only be used when in conjunction with EFS-Web. If this form is mailed to the USPTO, it may cause delays in reinstating the patent.**

Privacy Act Statement

The Privacy Act of 1974 (P.L. 93-579) requires that you be given certain information in connection with your submission of the attached form related to a patent application or patent. Accordingly, pursuant to the requirements of the Act, please be advised that: (1) the general authority for the collection of this information is 35 U.S.C. 2(b)(2); (2) furnishing of the information solicited is voluntary; and (3) the principal purpose for which the information is used by the U.S. Patent and Trademark Office is to process and/or examine your submission related to a patent application or patent. If you do not furnish the requested information, the U.S. Patent and Trademark Office may not be able to process and/or examine your submission, which may result in termination of proceedings or abandonment of the application or expiration of the patent.

The information provided by you in this form will be subject to the following routine uses:

1. The information on this form will be treated confidentially to the extent allowed under the Freedom of Information Act (5 U.S.C. 552) and the Privacy Act (5 U.S.C. 552a). Records from this system of records may be disclosed to the Department of Justice to determine whether the Freedom of Information Act requires disclosure of these record s.

2. A record from this system of records may be disclosed, as a routine use, in the course of presenting evidence to a court, magistrate, or administrative tribunal, including disclosures to opposing counsel in the course of settlement negotiations.

3. A record in this system of records may be disclosed, as a routine use, to a Member of Congress submitting a request involving an individual, to whom the record pertains, when the individual has requested assistance from the Member with respect to the subject matter of the record.

4. A record in this system of records may be disclosed, as a routine use, to a contractor of the Agency having need for the information in order to perform a contract. Recipients of information shall be required to comply with the requirements of the Privacy Act of 1974, as amended, pursuant to 5 U.S.C. 552a(m).

5. A record related to an International Application filed under the Patent Cooperation Treaty in this system of records may be disclosed, as a routine use, to the International Bureau of the World Intellectual Property Organization, pursuant to the Patent Cooperation Treaty.

6. A record in this system of records may be disclosed, as a routine use, to another federal agency for purposes of National Security review (35 U.S.C. 181) and for review pursuant to the Atomic Energy Act (42 U.S.C. 218(c)).

7. A record from this system of records may be disclosed, as a routine use, to the Administrator, General Services, or his/her designee, during an inspection of records conducted by GSA as part of that agency's responsibility to recommend improvements in records management practices and programs, under authority of 44 U.S.C. 2904 and 2906. Such disclosure shall be made in accordance with the GSA regulations governing inspection of records for this purpose, and any other relevant (i.e., GSA or Commerce) directive. Such disclosure shall not be used to make determinations about individuals.

8. A record from this system of records may be disclosed, as a routine use, to the public after either publication of the application pursuant to 35 U.S.C. 122(b) or issuance of a patent pursuant to 35 U.S.C. 151. Further, a record may be disclosed, subject to the limitations of 37 CFR 1.14, as a routine use, to the public if the record was filed in an application which became abandoned or in which the proceedings were terminated and which application is referenced by either a published application, an application open to public inspections or an issued patent.

9. A record from this system of records may be disclosed, as a routine use, to a Federal, State, or local law enforcement agency, if the USPTO becomes aware of a violation or potential violation of law or regulation.

PTO/SB/66 (03-09)
Approved for use through 03/31/2012. OMB 0651-0016
U.S. Patent and Trademark Office: U.S. DEPARTMENT OF COMMERCE
Under the Paperwork Reduction Act of 1995, no persons are required to respond to a collection of information unless it displays valid OMB control number.

PETITION TO ACCEPT UNINTENTIONALLY DELAYED PAYMENT OF MAINTENANCE FEE IN AN EXPIRED PATENT (37 CFR 1.378(c))

Patent Number	Issue Date (YYYY-MM-DD)	Application Number	Filing Date (YYYY-MM-DD)	Docket Number (if applicable)
6071256	2000-06-06	09019020	1998-02-05	n/a

CAUTION: Maintenance fee (and surcharge, if any) payment must correctly identify: (1) the patent number and (2) the application number of the actual U.S. application leading to issuance of that patent to ensure the fee(s) is/are associated with the correct patent. 37 CFR 1.366(c) and (d).

SMALL ENTITY
☒ Patentee claims, or has previously claimed, small entity status. See 37 CFR 1.27.

LOSS OF ENTITLEMENT TO SMALL ENTITY STATUS
☐ Patentee is no longer entitled to small entity status. See 37 CFR 1.27(g)

NOT Small Entity		Small Entity	
Fee	Code	Fee	Code
○ 3 ½ year	(1551)	○ 3 ½ year	(2551)
○ 7 ½ year	(1552)	◉ 7 ½ year	(2552)
○ 11 ½ year	(1553)	○ 11 ½ year	(2553)

SURCHARGE
The surcharge required by 37 CFR 1.20(i)(2) (Fee Code 1558) must be paid as a condition of accepting unintentionally delayed payment of the maintenance fee.

MAINTENANCE FEE (37 CFR 1.20(e)-(g))
The appropriate maintenance fee must be submitted with this petition.

STATEMENT
THE UNDERSIGNED CERTIFIES THAT THE DELAY IN PAYMENT OF THE MAINTENANCE FEE TO THIS PATENT WAS UNINTENTIONAL

PETITIONER(S) REQUEST THAT THE DELAYED PAYMENT OF THE MAINTENANCE FEE BE ACCEPTED AND THE PATENT REINSTATED

THIS PORTION MUST BE COMPLETED BY THE SIGNATORY OR SIGNATORIES

37 CFR 1.378(d) states: "Any petition under this section must be signed by an attorney or agent registered to practice before the Patent and Trademark Office, or by the patentee, the assignee, or other party in interest."

I certify, in accordance with 37 CFR 1.4(d)(4) that I am

○ An attorney or agent registered to practice before the Patent and Trademark Office

◉ A sole patentee

○ A joint patentee; I certify that I am authorized to sign this submission on behalf of all the other patentees.

○ A joint patentee; all of whom are signing this e-petition

○ The assignee of record of the entire interest

Sole Patentee			
A signature of the applicant or representative is required in accordance with 37 CFR 1.33 and 10.18. Please see 37 CFR 1.4(d) for the form of the signature.			
Signature	/Beverly J. Lam/	Date (YYYY-MM-DD)	2009-04-02
Name	Beverly J. Lam		

This collection of information is required by 37 CFR 1.378(c). The information is required to obtain or retain a benefit by the public which is to file (and by the USPTO to process) an application. Confidentiality is governed by 35 U.S.C. 122 and 37 CFR 1.11 and 1.14. This collection is estimated to take 1 hour to complete, including gathering, preparing, and submitting the completed application form to the USPTO. Time will vary depending upon the individual case. Any comments on the amount of time you require to complete this form and/ or suggestions for reducing this burden, should be sent to the Chief Information Officer, U.S. Patent and Trademark Office, U.S. Department of Commerce, P.O. Box 1450, Alexandria, VA 22313-1450. DO NOT SEND FEES OR COMPLETED FORMS TO THIS ADDRESS. **This form can only be used when in conjunction with EFS-Web. If this form is mailed to the USPTO, it may cause delays in reinstating the patent.**

Privacy Act Statement

The Privacy Act of 1974 (P.L. 93-579) requires that you be given certain information in connection with your submission of the attached form related to a patent application or patent. Accordingly, pursuant to the requirements of the Act, please be advised that: (1) the general authority for the collection of this information is 35 U.S.C. 2(b)(2); (2) furnishing of the information solicited is voluntary; and (3) the principal purpose for which the information is used by the U.S. Patent and Trademark Office is to process and/or examine your submission related to a patent application or patent. If you do not furnish the requested information, the U.S. Patent and Trademark Office may not be able to process and/or examine your submission, which may result in termination of proceedings or abandonment of the application or expiration of the patent.

The information provided by you in this form will be subject to the following routine uses:

1. The information on this form will be treated confidentially to the extent allowed under the Freedom of Information Act (5 U.S.C. 552) and the Privacy Act (5 U.S.C. 552a). Records from this system of records may be disclosed to the Department of Justice to determine whether the Freedom of Information Act requires disclosure of these records.

2. A record from this system of records may be disclosed, as a routine use, in the course of presenting evidence to a court, magistrate, or administrative tribunal, including disclosures to opposing counsel in the course of settlement negotiations.

3. A record in this system of records may be disclosed, as a routine use, to a Member of Congress submitting a request involving an individual, to whom the record pertains, when the individual has requested assistance from the Member with respect to the subject matter of the record.

4. A record in this system of records may be disclosed, as a routine use, to a contractor of the Agency having need for the information in order to perform a contract. Recipients of information shall be required to comply with the requirements of the Privacy Act of 1974, as amended, pursuant to 5 U.S.C. 552a(m).

5. A record related to an International Application filed under the Patent Cooperation Treaty in this system of records may be disclosed, as a routine use, to the International Bureau of the World Intellectual Property Organization, pursuant to the Patent Cooperation Treaty.

6. A record in this system of records may be disclosed, as a routine use, to another federal agency for purposes of National Security review (35 U.S.C. 181) and for review pursuant to the Atomic Energy Act (42 U.S.C. 218(c)).

7. A record from this system of records may be disclosed, as a routine use, to the Administrator, General Services, or his/her designee, during an inspection of records conducted by GSA as part of that agency's responsibility to recommend improvements in records management practices and programs, under authority of 44 U.S.C. 2904 and 2906. Such disclosure shall be made in accordance with the GSA regulations governing inspection of records for this purpose, and any other relevant (i.e., GSA or Commerce) directive. Such disclosure shall not be used to make determinations about individuals.

8. A record from this system of records may be disclosed, as a routine use, to the public after either publication of the application pursuant to 35 U.S.C. 122(b) or issuance of a patent pursuant to 35 U.S.C. 151. Further, a record may be disclosed, subject to the limitations of 37 CFR 1.14, as a routine use, to the public if the record was filed in an application which became abandoned or in which the proceedings were terminated and which application is referenced by either a published application, an application open to public inspections or an issued patent.

9. A record from this system of records may be disclosed, as a routine use, to a Federal, State, or local law enforcement agency, if the USPTO becomes aware of a violation or potential violation of law or regulation.

UNITED STATES PATENT AND TRADEMARK OFFICE

Commissioner for Patents
United States Patent and Trademark Office
P.O. Box 1450
Alexandria, VA 22313-1450
www.uspto.gov

In re Patent No. 6071256
Issue Date: June 6,2000
Application No. 09019020
Filed: February 5,1998
Attorney Docket No. 97-1538

:DECISION GRANTING PETITION
:UNDER 37 CFR 1.378(c)

This is a decision on the electronic petition, filed April 2,2009 ,under 37 CFR 1.378(c) to accept the unintentionally delayed payment of the 7.5 year maintenance fee for the above-identified patent.

The petition is **GRANTED**.

The maintenance fee is accepted, and the above-identified patent reinstated as of April 2,2009 . This decision also constitutes notice that the fee has been accepted. An electronic copy of the petition and this decision has been created as an entry in the Image File Wrapper. Nevertheless, petitioner should print and retain an independent copy.

Telephone inquiries related to this electronic decision should be directed to the Electronic Business Center at 1-866-217-9197.

UNITED STATES PATENT AND TRADEMARK OFFICE

Commissioner for Patents
United States Patent and Trademark Office
P.O. Box 1450
Alexandria, VA 22313-1450
www.uspto.gov

In re Patent No. 6027956
Issue Date: February 22,2000
Application No. 09019079
Filed: February 5,1998
Attorney Docket No. 5048-9

:
:DECISION GRANTING PETITION
:UNDER 37 CFR 1.378(c)
:

This is a decision on the electronic petition, filed April 11,2008 ,under 37 CFR 1.378(c) to accept the unintentionally delayed payment of the 7.5 year maintenance fee for the above-identified patent.

The petition is GRANTED.

The maintenance fee is accepted, and the above-identified patent reinstated as of April 11,2008 . This decision also constitutes notice that the fee has been accepted. An electronic copy of the petition and this decision has been created as an entry in an Image File Wrapper. Nevertheless, petitioner should print and retain an independent copy

Telephone inquires related to this electronic decision should be directed to the Electronic Business Center at 1-866-217-9197.

Under the Paperwork Reduction Act of 1995, no persons are required to respond to a collection of information unless it displays valid OMB control number.

PETITION TO ACCEPT UNINTENTIONALLY DELAYED PAYMENT OF MAINTENANCE FEE IN AN EXPIRED PATENT (37 CFR 1.378(c))

Patent Number	Issue Date (YYYY-MM-DD)	Application Number	Filing Date (YYYY-MM-DD)	Docket Number (if applicable)
6,027,956	2000-02-22	09019079	1998-02-05	INT-6,027,956

CAUTION: Maintenance fee (and surcharge, if any) payment must correctly identify: (1) the patent number and (2) the application number of the actual U.S. application leading to issuance of that patent to ensure the fee(s) is/are associated with the correct patent. 37 CFR 1.366(c) and (d).

SMALL ENTITY
☒ Patentee claims, or has previously claimed, small entity status. See 37 CFR 1.27.

LOSS OF ENTITLEMENT TO SMALL ENTITY STATUS
☐ Patentee is no longer entitled to small entity status. See 37 CFR 1.27(g)

NOT Small Entity		Small Entity	
Fee	Code	Fee	Code
○ 3 ½ year	(1551)	○ 3 ½ year	(2551)
○ 7 ½ year	(1552)	◉ 7 ½ year	(2552)
○ 11 ½ year	(1553)	○ 11 ½ year	(2553)

SURCHARGE
The surcharge required by 37 CFR 1.20(i)(2) (Fee Code 1558) must be paid as a condition of accepting unintentionally delayed payment of the maintenance fee.

MAINTENANCE FEE (37 CFR 1.20(e)-(g))
The appropriate maintenance fee must be submitted with this petition.

STATEMENT
THE UNDERSIGNED CERTIFIES THAT THE DELAY IN PAYMENT OF THE MAINTENANCE FEE TO THIS PATENT WAS UNINTENTIONAL

PETITIONER(S) REQUEST THAT THE DELAYED PAYMENT OF THE MAINTENANCE FEE BE ACCEPTED AND THE PATENT REINSTATED

THIS PORTION MUST BE COMPLETED BY THE SIGNATORY OR SIGNATORIES

37 CFR 1.378(d) states: "Any petition under this section must be signed by an attorney or agent registered to practice before the Patent and Trademark Office, or by the patentee, the assignee, or other party in interest."

I certify, in accordance with 37 CFR 1.4(d)(4) that I am

◉ An attorney or agent registered to practice before the Patent and Trademark Office

○ A sole patentee

○ A joint patentee; I certify that I am authorized to sign this submission on behalf of all the other patentees.

○ A joint patentee; all of whom are signing this e-petition

○ The assignee of record of the entire interest

Patent Practitioner			
A signature of the applicant or representative is required in accordance with 37 CFR 1.33 and 10.18. Please see 37 CFR 1.4(d) for the form of the signature			
Signature	/s/ Vernon W. Francissen /s/	Date (YYYY-MM-DD)	2008-04-11
Name	Vernon W. Francissen	Registration Number	41762

This collection of information is required by 37 CFR 1.378(c). The information is required to obtain or retain a benefit by the public which is to file (and by the USPTO to process) an application. Confidentiality is governed by 35 U.S.C. 122 and 37 CFR 1.11 and 1.14. This collection is estimated to take 1 hour to complete, including gathering, preparing, and submitting the completed application form to the USPTO. Time will vary depending upon the individual case. Any comments on the amount of time you require to complete this form and/ or suggestions for reducing this burden, should be sent to the Chief Information Officer, U.S. Patent and Trademark Office, U.S. Department of Commerce, P.O. Box 1450, Alexandria, VA 22313-1450. DO NOT SEND FEES OR COMPLETED FORMS TO THIS ADDRESS. **This form can only be used when in conjunction with EFS-Web. If this form is mailed to the USPTO, it may cause delays in reinstating the patent.**

Privacy Act Statement

The Privacy Act of 1974 (P.L. 93-579) requires that you be given certain information in connection with your submission of the attached form related to a patent application or patent. Accordingly, pursuant to the requirements of the Act, please be advised that: (1) the general authority for the collection of this information is 35 U.S.C. 2(b)(2); (2) furnishing of the information solicited is voluntary; and (3) the principal purpose for which the information is used by the U.S. Patent and Trademark Office is to process and/or examine your submission related to a patent application or patent. If you do not furnish the requested information, the U.S. Patent and Trademark Office may not be able to process and/or examine your submission, which may result in termination of proceedings or abandonment of the application or expiration of the patent.

The information provided by you in this form will be subject to the following routine uses:

1. The information on this form will be treated confidentially to the extent allowed under the Freedom of Information Act (5 U.S.C. 552) and the Privacy Act (5 U.S.C. 552a). Records from this system of records may be disclosed to the Department of Justice to determine whether the Freedom of Information Act requires disclosure of these record s.

2. A record from this system of records may be disclosed, as a routine use, in the course of presenting evidence to a court, magistrate, or administrative tribunal, including disclosures to opposing counsel in the course of settlement negotiations.

3. A record in this system of records may be disclosed, as a routine use, to a Member of Congress submitting a request involving an individual, to whom the record pertains, when the individual has requested assistance from the Member with respect to the subject matter of the record.

4. A record in this system of records may be disclosed, as a routine use, to a contractor of the Agency having need for the information in order to perform a contract. Recipients of information shall be required to comply with the requirements of the Privacy Act of 1974, as amended, pursuant to 5 U.S.C. 552a(m).

5. A record related to an International Application filed under the Patent Cooperation Treaty in this system of records may be disclosed, as a routine use, to the International Bureau of the World Intellectual Property Organization, pursuant to the Patent Cooperation Treaty.

6. A record in this system of records may be disclosed, as a routine use, to another federal agency for purposes of National Security review (35 U.S.C. 181) and for review pursuant to the Atomic Energy Act (42 U.S.C. 218(c)).

7. A record from this system of records may be disclosed, as a routine use, to the Administrator, General Services, or his/her designee, during an inspection of records conducted by GSA as part of that agency's responsibility to recommend improvements in records management practices and programs, under authority of 44 U.S.C. 2904 and 2906. Such disclosure shall be made in accordance with the GSA regulations governing inspection of records for this purpose, and any other relevant (i.e., GSA or Commerce) directive. Such disclosure shall not be used to make determinations about individuals.

8. A record from this system of records may be disclosed, as a routine use, to the public after either publication of the application pursuant to 35 U.S.C. 122(b) or issuance of a patent pursuant to 35 U.S.C. 151. Further, a record may be disclosed, subject to the limitations of 37 CFR 1.14, as a routine use, to the public if the record was filed in an application which became abandoned or in which the proceedings were terminated and which application is referenced by either a published application, an application open to public inspections or an issued patent.

9. A record from this system of records may be disclosed, as a routine use, to a Federal, State, or local law enforcement agency, if the USPTO becomes aware of a violation or potential violation of law or regulation.

SPE RESPONSE FOR CERTIFICATE OF CORRECTION

DATE : 62805

Paper No.: _____

TO SPE OF : ART UNIT 1644 - HUYNH

SUBJECT : Request for Certificate of Correction on Patent No.: 6 893636

A response is requested with respect to the accompanying request for a certificate of correction.

Please complete this form and return with file, within **7** days to:
Palm location **7580, Certificates of Correction Branch – South Tower – 9A22**
If response is for an IFW, **return to employee (named below) via PUBSCofC Team in MADRAS.**
With respect to the change(s) requested, correcting Office and/or Applicant's errors, should the patent read as shown in the certificate of correction (COCIN)? No new matter should be introduced, nor should the scope or meaning of the claims be changed.

Thank You For Your Assistance

ROCHAUN JOHNSON
Certificates of Correction Branch
Tel. No. 703-308-9390 EXT 119

The request for issuing the above-identified correction(s) is hereby:
Note your decision on the appropriate box.

- [X] **Approved** — **All** changes apply.
- [ ] **Approved in Part** — Specify below which changes **do not** apply.
- [ ] **Denied** — State the reasons for denial below.

Comments:

Christine Chan — **SPE**

1644 — **Art Unit**

Under the Paperwork Reduction Act of 1995, no persons are required to respond to a collection of information unless it displays valid OMB control number.

PETITION TO ACCEPT UNINTENTIONALLY DELAYED PAYMENT OF MAINTENANCE FEE IN AN EXPIRED PATENT (37 CFR 1.378(c))

Patent Number	Issue Date (YYYY-MM-DD)	Application Number	Filing Date (YYYY-MM-DD)	Docket Number (if applicable)
6171151	2001-01-09	09019770	1998-02-06	HALO 0100-6

CAUTION: Maintenance fee (and surcharge, if any) payment must correctly identify: (1) the patent number and (2) the application number of the actual U.S. application leading to issuance of that patent to ensure the fee(s) is/are associated with the correct patent. 37 CFR 1.366(c) and (d).

SMALL ENTITY
☐ Patentee claims, or has previously claimed, small entity status. See 37 CFR 1.27.

LOSS OF ENTITLEMENT TO SMALL ENTITY STATUS
☒ Patentee is no longer entitled to small entity status. See 37 CFR 1.27(g)

NOT Small Entity		Small Entity	
Fee	Code	Fee	Code
◉ 3 ½ year	(1551)	○ 3 ½ year	(2551)
○ 7 ½ year	(1552)	○ 7 ½ year	(2552)
○ 11 ½ year	(1553)	○ 11 ½ year	(2553)

SURCHARGE
The surcharge required by 37 CFR 1.20(i)(2) (Fee Code 1558) must be paid as a condition of accepting unintentionally delayed payment of the maintenance fee.

MAINTENANCE FEE (37 CFR 1.20(e)-(g))
The appropriate maintenance fee must be submitted with this petition.

STATEMENT
THE UNDERSIGNED CERTIFIES THAT THE DELAY IN PAYMENT OF THE MAINTENANCE FEE TO THIS PATENT WAS UNINTENTIONAL

PETITIONER(S) REQUEST THAT THE DELAYED PAYMENT OF THE MAINTENANCE FEE BE ACCEPTED AND THE PATENT REINSTATED

THIS PORTION MUST BE COMPLETED BY THE SIGNATORY OR SIGNATORIES

37 CFR 1.378(d) states: "Any petition under this section must be signed by an attorney or agent registered to practice before the Patent and Trademark Office, or by the patentee, the assignee, or other party in interest."

I certify, in accordance with 37 CFR 1.4(d)(4) that I am

◉ An attorney or agent registered to practice before the Patent and Trademark Office

○ A sole patentee

○ A joint patentee; I certify that I am authorized to sign this submission on behalf of all the other patentees.

○ A joint patentee; all of whom are signing this e-petition

○ The assignee of record of the entire interest

Patent Practitioner			
A signature of the applicant or representative is required in accordance with 37 CFR 1.33 and 10.18. Please see 37 CFR 1.4(d) for the form of the signature			
Signature	/PETER J. SU/	Date (YYYY-MM-DD)	2006-12-22
Name	Peter J. Su	Registration Number	43939

This collection of information is required by 37 CFR 1.378(c). The information is required to obtain or retain a benefit by the public which is to file (and by the USPTO to process) an application. Confidentiality is governed by 35 U.S.C. 122 and 37 CFR 1.11 and 1.14. This collection is estimated to take 1 hour to complete, including gathering, preparing, and submitting the completed application form to the USPTO. Time will vary depending upon the individual case. Any comments on the amount of time you require to complete this form and/ or suggestions for reducing this burden, should be sent to the Chief Information Officer, U.S. Patent and Trademark Office, U.S. Department of Commerce, P.O. Box 1450, Alexandria, VA 22313-1450. DO NOT SEND FEES OR COMPLETED FORMS TO THIS ADDRESS. **This form can only be used when in conjunction with EFS-Web. If this form is mailed to the USPTO, it may cause delays in reinstating the patent.**

Privacy Act Statement

The Privacy Act of 1974 (P.L. 93-579) requires that you be given certain information in connection with your submission of the attached form related to a patent application or patent. Accordingly, pursuant to the requirements of the Act, please be advised that: (1) the general authority for the collection of this information is 35 U.S.C. 2(b)(2); (2) furnishing of the information solicited is voluntary; and (3) the principal purpose for which the information is used by the U.S. Patent and Trademark Office is to process and/or examine your submission related to a patent application or patent. If you do not furnish the requested information, the U.S. Patent and Trademark Office may not be able to process and/or examine your submission, which may result in termination of proceedings or abandonment of the application or expiration of the patent.

The information provided by you in this form will be subject to the following routine uses:

1. The information on this form will be treated confidentially to the extent allowed under the Freedom of Information Act (5 U.S.C. 552) and the Privacy Act (5 U.S.C. 552a). Records from this system of records may be disclosed to the Department of Justice to determine whether the Freedom of Information Act requires disclosure of these record s.

2. A record from this system of records may be disclosed, as a routine use, in the course of presenting evidence to a court, magistrate, or administrative tribunal, including disclosures to opposing counsel in the course of settlement negotiations.

3. A record in this system of records may be disclosed, as a routine use, to a Member of Congress submitting a request involving an individual, to whom the record pertains, when the individual has requested assistance from the Member with respect to the subject matter of the record.

4. A record in this system of records may be disclosed, as a routine use, to a contractor of the Agency having need for the information in order to perform a contract. Recipients of information shall be required to comply with the requirements of the Privacy Act of 1974, as amended, pursuant to 5 U.S.C. 552a(m).

5. A record related to an International Application filed under the Patent Cooperation Treaty in this system of records may be disclosed, as a routine use, to the International Bureau of the World Intellectual Property Organization, pursuant to the Patent Cooperation Treaty.

6. A record in this system of records may be disclosed, as a routine use, to another federal agency for purposes of National Security review (35 U.S.C. 181) and for review pursuant to the Atomic Energy Act (42 U.S.C. 218(c)).

7. A record from this system of records may be disclosed, as a routine use, to the Administrator, General Services, or his/her designee, during an inspection of records conducted by GSA as part of that agency's responsibility to recommend improvements in records management practices and programs, under authority of 44 U.S.C. 2904 and 2906. Such disclosure shall be made in accordance with the GSA regulations governing inspection of records for this purpose, and any other relevant (i.e., GSA or Commerce) directive. Such disclosure shall not be used to make determinations about individuals.

8. A record from this system of records may be disclosed, as a routine use, to the public after either publication of the application pursuant to 35 U.S.C. 122(b) or issuance of a patent pursuant to 35 U.S.C. 151. Further, a record may be disclosed, subject to the limitations of 37 CFR 1.14, as a routine use, to the public if the record was filed in an application which became abandoned or in which the proceedings were terminated and which application is referenced by either a published application, an application open to public inspections or an issued patent.

9. A record from this system of records may be disclosed, as a routine use, to a Federal, State, or local law enforcement agency, if the USPTO becomes aware of a violation or potential violation of law or regulation.

UNITED STATES PATENT AND TRADEMARK OFFICE

Commissioner for Patents
United States Patent and Trademark Office
P.O. Box 1450
Alexandria, VA 22313-1450
www.uspto.gov

In re Patent No. 6171151
Issue Date: January 9,2001
Application No. 09019770
Filed: February 6,1998
Attorney Docket No. HALO-013

:

:DECISION GRANTING PETITION
:UNDER 37 CFR 1.378(c)

:

This is a decision on the electronic petition, filed December 22,2006 ,under 37 CFR 1.378(c) to accept the unintentionally delayed payment of the 3.5 year maintenance fee for the above-identified patent.

The petition is GRANTED.

The maintenance fee is accepted, and the above-identified patent reinstated as of December 22,2006. This decision also constitutes notice that the fee has been accepted. An electronic copy of the petition and this decision has been created as an entry in an Image File Wrapper. Nevertheless, petitioner should print and retain an independent copy

Telephone inquires related to this electronic decision should be directed to the Electronic Business Center at 1-866-217-9197.

UNITED STATES PATENT AND TRADEMARK OFFICE

Commissioner for Patents
United States Patent and Trademark Office
P.O. Box 1450
Alexandria, VA 22313-1450
www.uspto.gov
DIW Apr-07

HAYNES BEFFEL & WOLFELD LLP
P O BOX 366
HALF MOON BAY CA 94019

COPY MAILED

APR 25 2007

OFFICE OF PETITIONS

In re Patent No. 6171151	:	
Issued: 01/09/2001	:	LETTER
Application No. 09/019770	:	
Filed: 02/06/1998	:	
For: ISOLATION MODULE FIOR	:	

This is a letter in reference to the papers styled "RESPONSE TO DECISION ON PETITION GRANTING PETITION UNDER 37 C.F.R. §1.378(c)" filed on 29 January, 2007.

Official notice is taken of the papers referenced above. Such notice does not require any modification of the outstanding decision.

Telephone inquiries related to this decision should be directed to the undersigned at (571) 272-3231.

DWood

Douglas I. Wood
Senior Petitions Attorney
Office of Petitions

NOTICE RE: CERTIFICATES OF CORRECTION

DATE 05/15/2002 **Paper No.:** 9

TO : **Supervisor, Art Unit** 3700

SUBJECT : Certificate of Correction Request in Patent No.: 5967361

A response to the following question is requested with respect to the accompanying request for of correction.

With respect to the change(s) requested, correcting Office and/or Applicant's errors, shou patent read as shown in the certificate of correction? No new matter should be introduced, nor s scope or meaning of the claims be changed.

PLEASE COMPLETE THIS FORM AND
RETURN WITH FILE, WITHIN 7 DAYS,
TO CERTIFICATES OF CORRECTION BRANCH - PK 3-915/922
PALM LOCATION 7580 - TEL. N0. 305-8309

THANK YOU FOR YOUR ASSISTANCE!

Note your decision, regarding the changes requested in the Request for Certificate of Cor placing a check mark (+) in the box that reflects your decision, which corresponds to the questio above.

☒ **YES** ☐ **NO** ☐ **Comments below**

☐ **Comments:**

Lu ag — 3727

Supervisor **Art Unit**

UNITED STATES DEPARTMENT OF COMMERCE
Patent and Trademark Office
ASSISTANT SECRETARY AND COMMISSIONER
OF PATENTS AND TRADEMARKS
Washington, DC 20231

MAILED
MAR 17 2000
Office of Director
Technology Center 1600

RJH
Paper No. 17

In re Application of:
SIMS, PETER J.
Serial No.: 09/020,393
Filed: February 09, 1998
For: Compositions and Methods to Inhibit Formation of the C5B-9 Complex of Complement

DECISION ON PETITION

This is a decision on the petition, filed November 15, 1999, to withdraw the restriction requirement relative to claims 10-19. Note, the petition has been treated under the provisions of 37 CFR 1.144.

On February 4, 1999, a 32 way restriction requirement was mailed to applicant. On March 10, 1999, applicant elected Group II with antibodies as the species. This corresponded to claims 10-12 and 16-17. Along with the election, applicant traversed the restriction requirement at least insofar as it related to claims 10-19. On June 8, 1999, a non-final Office action on the merits was mailed to applicant. That Office action said that the traversal of the restriction requirement was not persuasive because the inventions were independent or distinct for the reasons set forth in the February 4, 1999 requirement. The restriction requirement was made final in the June 8, 1999 action. On November 15, 1999, the present petition was filed.

Petitioner argued that the June 8, 1999 Office action failed to respond to any of applicants' reasons why there are not 32 inventions and failed to explain why the divisions were not more appropriately divided into species rather than inventions. Petitioner then reiterated the position that all of claims 10-19 were directed to a single invention and, therefore, claims 10-19 should all be examined.

Restriction among invention is proper when the inventions are independent or distinct and there would be a serious burden on the examiner if all the inventions were examined in the same application. See MPEP 803. In the February 4, 1999 restriction requirement, the examiner fully explained how the inventions listed therein were independent or distinct from each other and why there would be a serious burden on the examiner if all the inventions were examined in the

same application. However, petitioner failed to point out any real deficiency in the examiner's position as stated in the February 4, 1999 restriction requirement. Applicants' March 10, 1999 paper will be treated here in detail as the November 15, 1999 petition provided nothing more than what is already in that paper.

Page 1 through page 5, line 17, constituted a reiteration of the invention Groups as set forth by the examiner.

Page 5, line 18, through page 6, line 2, constituted a general statement that the restriction requirement is improper and that the examiner confused restriction and election of species. No supporting reasons for such a statement were given there.

At page 6, lines 2-14, applicants set forth what they believed to be a reasonable grouping for the claims.

At page 6, lines 15-16, applicants set forth the invention they elected for examination.

At page 6, line 17, through page 7, lines 1-5, applicants correctly stated that if the examiner maintained the restriction requirement, an obviousness-type double patenting rejection cannot later be made between the claims. See 35 U.S.C. 121.

At page 7, lines 6-13, applicants asserted that the examiner acknowledged that the independent claim, claim 10 in particular, was generic. Applicants went on to say that if a generic claim is allowable over the prior art, there can be no concern about the distinctness of various species encompassed by the generic claim (see 37 CFR 1.141). Applicants further stated that even if the species were patentably distinct, an allowable generic claim renders moot the effort to limit the application to a single invention defined by each species. While this may be true, a review of the record reveals that claim 10 has not been determined to be allowable over the prior art. Therefore, applicants' arguments are not persuasive of reversible error in the examiner's restriction requirement.

At page 7, lines 14-19, applicants asserted that restricting the claims into 32 inventions would incur substantial cost for applicants, which would place an undue burden on the assignees of this application. This argument is not persuasive since cost is not a factor in determining the correctness of a restriction requirement.

Page 7, line 20, was a final request to reconsider the restriction requirement and provide an action on claims 10-19.

Page 8, which is the last page, merely stated that applicants petitioned the restriction requirement if the examiner maintained his position and provided miscellaneous statements regarding fees.

Since petitioner has failed to provide any persuasive reasons why the restriction requirement was in error, the petition is hereby denied.

PETITION DENIED.

John Doll, Director
Technology Center 1600

PATREA L PABST
ARNALL GOLDEN & GREGORY
2800 W PEACHTREE STREET
ATLANTA, GA 30309-3450

****
*** TX REPORT ***
****

TRANSMISSION OK

TX/RX NO	2226
CONNECTION TEL	914048738795
SUBADDRESS	
CONNECTION ID	ARNALL GOLDEN &
ST. TIME	12/28 15:09
USAGE T	01'50
PGS.	5
RESULT	OK

TELECOPY/FACSIMILE TRANSMISSION

DATE: 12/28/00
PAGES, INCLUDING COVER SHEET: 5
FROM: PHILLIP GAMBEL
EXAMINER, ART UNIT 1644
FAX NUMBER: (703) 305-7401
PHONE NUMBER: (703) 308-3997

TO: PATRICIA PABST
FIRM: ARNALL GOLDEN AND GREGORY
ATTORNEY'S DOCKET # OR SERIAL NUMBER: 09/060393 // OMRF 170
FAX/TELECOPIER NUMBER:

1·404·873·8795

COMMENTS:
ENCLOSED COPY OF
(1) ADVISORY ACTION (PAPER NO 20) MAILED 6/14/00
(2) PETITION DECISION (PAPER NO. 17) MAILED 3/17/00

IF YOU HAVE NOT RECEIVED ALL THE PAGES OF THIS TRANSMISSION, PLEASE CONTACT THE EXAMINER AT THE TELEPHONE NUMBER LISTED ABOVE.

ALL FAX MACHINES RECEIVE TRANSMISSIONS 24 HOURS PER DAY, SEVEN DAYS PER WEEK.

IN COMPLIANCE WITH 1096 OG 30, THE FILING DATE ACCORDED EACH

TELECOPY/FACSIMILE TRANSMISSION

DATE: 12/28/00
PAGES, INCLUDING COVER SHEET: 5
FROM: PHILLIP GAMBEL
EXAMINER, ART UNIT 1644
FAX NUMBER: (703) 3057-401
PHONE NUMBER: (703) 308-3997

TO: PATRICIA PABST
FIRM: SIDNALL GOLDEN AND GREGORY
ATTORNEY'S DOCKET # OR SERIAL NUMBER: 09/010393 // OMRF 170
FAX/TELECOPIER NUMBER:

1·404·873·8795

COMMENTS:
ENCLOSED COPY OF
① ADVISORY ACTION (PAPER NO 20) MAILED 6/14/00
② PETITION DECISION (PAPER NO. 17) MAILED 3/17/00

IF YOU HAVE NOT RECEIVED ALL THE PAGES OF THIS TRANSMISSION, PLEASE CONTACT THE EXAMINER AT THE TELEPHONE NUMBER LISTED ABOVE.

ALL FAX MACHINES RECEIVE TRANSMISSIONS 24 HOURS PER DAY, SEVEN DAYS PER WEEK.

IN COMPLIANCE WITH 1096 OG 30, THE FILING DATE ACCORDED EACH OFFICIAL FAX TRANSMISSION WILL BE DETERMINED BY THE FAX MACHINE DATE STAMP FOUND ON THE LAST PAGE OF THE TRANSMISSION, UNLESS THAT DATE IS A SATURDAY, SUNDAY, OR FEDERAL HOLIDAY WITHIN THE DISTRICT OF COLUMBIA, IN WHICH CASE THE OFFICIAL DATE OF RECEIPT WILL BE THE NEXT BUSINESS DAY.

THE DOCUMENT(S) ACCOMPANYING THIS FACSIMILE TRANSMISSION CONTAIN(S) INFORMATION FROM THE UNITED STATES PATENT AND TRADEMARK OFFICE WHICH IS CONFIDENTIAL AND/OR LEGALLY PRIVILEDGED. THIS INFORMATION IS FOR THE USE OF THE INDIVIDUAL OR FIRM NAMED ON THIS SHEET. IF YOU ARE NOT THE INTENDED RECIPIENT, YOU ARE HEREBY NOTIFIED THAT ANY DISCLOSURE, COPYING, DISTRIBUTION, OR THE TAKING OF ANY ACTION IN RELIANCE ON THE CONTENTS OF THIS INFORMATION IS STRICTLY PROHIBITED. THE DOCUMENTS SHOULD BE RETURNED TO THE PATENT AND TRADEMARK OFFICE IMMEDIATELY. IF THIS FACSIMILE IS RECEIVED IN ERROR, PLEASE NOTIFY THE EXAMINER LISTED HEREON IMMEDIATELY.

UNITED STATES DEPARTMENT OF COMMERCE
Patent and Trademark Office
ASSISTANT SECRETARY AND COMMISSIONER
OF PATENTS AND TRADEMARKS
Washington, DC 20231

MAILED
MAR 17 2000
Office of Director
Technology Center 1600

RJH
Paper No. 17

In re Application of:
SIMS, PETER J.
Serial No.: 09/020,393
Filed: February 09, 1998
For: Compositions and Methods to Inhibit
Formation of the C5B-9 Complex of Complement

DECISION ON PETITION

This is a decision on the petition, filed November 15, 1999, to withdraw the restriction requirement relative to claims 10-19. Note, the petition has been treated under the provisions of 37 CFR 1.144.

On February 4, 1999, a 32 way restriction requirement was mailed to applicant. On March 10, 1999, applicant elected Group II with antibodies as the species. This corresponded to claims 10-12 and 16-17. Along with the election, applicant traversed the restriction requirement at least insofar as it related to claims 10-19. On June 8, 1999, a non-final Office action on the merits was mailed to applicant. That Office action said that the traversal of the restriction requirement was not persuasive because the inventions were independent or distinct for the reasons set forth in the February 4, 1999 requirement. The restriction requirement was made final in the June 8, 1999 action. On November 15, 1999, the present petition was filed.

Petitioner argued that the June 8, 1999 Office action failed to respond to any of applicants' reasons why there are not 32 inventions and failed to explain why the divisions were not more appropriately divided into species rather than inventions. Petitioner then reiterated the position that all of claims 10-19 were directed to a single invention and, therefore, claims 10-19 should all be examined.

Restriction among invention is proper when the inventions are independent or distinct and there would be a serious burden on the examiner if all the inventions were examined in the same application. See MPEP 803. In the February 4, 1999 restriction requirement, the examiner fully explained how the inventions listed therein were independent or distinct from each other and why there would be a serious burden on the examiner if all the inventions were examined in the

same application. ~~However, petitioner failed to point out any real deficiency in the examiner's~~ position as stated in the February 4, 1999 restriction requirement. Applicants' March 10, 1999 paper will be treated here in detail as the November 15, 1999 petition provided nothing more than what is already in that paper.

Page 1 through page 5, line 17, constituted a reiteration of the invention Groups as set forth by the examiner.

Page 5, line 18, through page 6, line 2, constituted a general statement that the restriction requirement is improper and that the examiner confused restriction and election of species. No supporting reasons for such a statement were given there.

At page 6, lines 2-14, applicants set forth what they believed to be a reasonable grouping for the claims.

At page 6, lines 15-16, applicants set forth the invention they elected for examination.

At page 6, line 17, through page 7, lines 1-5, applicants correctly stated that if the examiner maintained the restriction requirement, an obviousness-type double patenting rejection cannot later be made between the claims. See 35 U.S.C. 121.

At page 7, lines 6-13, applicants asserted that the examiner acknowledged that the independent claim, claim 10 in particular, was generic. Applicants went on to say that if a generic claim is allowable over the prior art, there can be no concern about the distinctness of various species encompassed by the generic claim (see 37 CFR 1.141). Applicants further stated that even if the species were patentably distinct, an allowable generic claim renders moot the effort to limit the application to a single invention defined by each species. While this may be true, a review of the record reveals that claim 10 has not been determined to be allowable over the prior art. Therefore, applicants' arguments are not persuasive of reversible error in the examiner's restriction requirement.

At page 7, lines 14-19, applicants asserted that restricting the claims into 32 inventions would incur substantial cost for applicants, which would place an undue burden on the assignees of this application. This argument is not persuasive since cost is not a factor in determining the correctness of a restriction requirement.

Page 7, line 20, was a final request to reconsider the restriction requirement and provide an action on claims 10-19.

~~Page 8, which is the last page, merely stated that applicants petitioned the~~ restriction requirement if the examiner maintained his position and provided miscellaneous statements regarding fees.

Since petitioner has failed to provide any persuasive reasons why the restriction requirement was in error, the petition is hereby denied.

PETITION DENIED.

John Doll, Director
Technology Center 1600

PATREA L PABST
ARNALL GOLDEN & GREGORY
2800 W PEACHTREE STREET
ATLANTA, GA 30309-3450