SPE RESPONSE FOR CERTIFICATE OF CORRECTION 09/497,572

Paper No.: _____

DATE : 4/15/04

TO SPE OF : ART UNIT 2155

SUBJECT : Request for Certificate of Correction on Patent No.: 6813634

A response is requested with respect to the accompanying request for a certificate of correction.

Please complete this form and return with file, within 7 days to:
Certificates of Correction Branch - PK 3-915
Palm location **7580** - Tel. No. 305-8309

With respect to the change(s) requested, correcting Office and/or Applicant's errors, should the patent read as shown in the certificate of correction? No new matter should be introduced, nor should the scope or meaning of the claims be changed.

Lamonte Newsome

Thank You For Your Assistance

Certificates of Correction Branch

The request for issuing the above-identified correction(s) is hereby:
Note your decision on the appropriate box.

- ☑ **Approved** — All changes apply.
- ☐ **Approved in Part** — Specify below which changes do not apply.
- ☐ **Denied** — State the reasons for denial below.

Comments:

SPE

2157
Art Unit

PTOL-306 (REV. 7/03)

U.S. DEPARTMENT OF COMMERCE Patent and Trademark Office

US006813634B1

(12) **United States Patent**
Ahmed

(10) **Patent No.: US 6,813,634 B1**
(45) **Date of Patent: Nov. 2, 2004**

(54) **NETWORK FAULT ALERTING SYSTEM AND METHOD**

(75) Inventor: **Mohammad Ahmed**, Austin, TX (US)

(73) Assignee: **International Business Machines Corporation**, Armonk, NY (US)

(*) Notice: Subject to any disclaimer, the term of this patent is extended or adjusted under 35 U.S.C. 154(b) by 0 days.

(21) Appl. No.: **09/497,572**

(22) Filed: **Feb. 3, 2000**

(51) **Int. Cl.**[7] **G06F 15/173**

(52) **U.S. Cl.** **709/224**; 709/202; 709/223; 714/39; 714/43; 714/47

(58) **Field of Search** 709/202, 223, 709/224, 231, 318; 714/43, 39, 47

(56) **References Cited**

U.S. PATENT DOCUMENTS

5,751,964	A	*	5/1998	Ordanic et al.	709/224
5,948,055	A	*	9/1999	Pulsipher et al.	709/202
5,964,837	A	*	10/1999	Chao et al.	709/224
6,012,095	A	*	1/2000	Thompson et al.	709/231
6,052,722	A	*	4/2000	Taghadoss	709/223
6,061,723	A	*	5/2000	Walker et al.	709/224
6,085,243	A	*	7/2000	Fletcher et al.	709/224
6,182,157	B1	*	1/2001	Schlener et al.	709/318
6,272,537	B1	*	8/2001	Kekic et al.	709/223
6,279,034	B1	*	8/2001	Jarriel et al.	709/223
6,336,139	B1	*	1/2002	Feridun et al.	709/224
6,564,341	B1	*	5/2003	Sundaram et al.	714/43
6,571,285	B1	*	5/2003	Groath et al.	709/223

OTHER PUBLICATIONS

5,675,724, Oct. 7, 1997, Beal, et al, "Knowledge Based Resource Management", 24 pages.
5,983,364, Nov. 9, 1999, Bortcosh, et al, System and Method for Diagnosing Computer Faults, 18 pages.

* cited by examiner

Primary Examiner—Patrice Winder
Assistant Examiner—ThuHa Nguyen
(74) *Attorney, Agent, or Firm*—Robert H. Frantz; David A. Mims, Jr.

(57) **ABSTRACT**

An enhancement to computer network maintenance technology which reduces redundant and inaccurate fault reporting and alerting based upon implementation of logic which determines the most likely single point of failure. In modern computer and telephone networks, certain single points of failure result in the false appearance of multiple failures. However, by analyzing the pattern of apparent failures in view of the known network topology, a single point of failure can be determined as the root cause of the multiple failure indications. An enhancement to the currently-available network maintenance technology, including software applications executing on network server platforms, provides this fault determination logic, filters spurious and incorrect failure reports, and posts failure reports only for the single point failure.

24 Claims, 6 Drawing Sheets

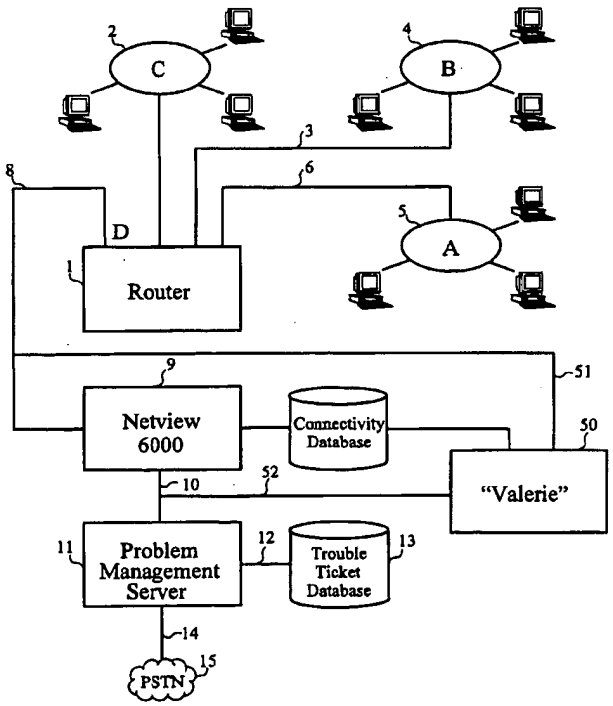

Prior Art

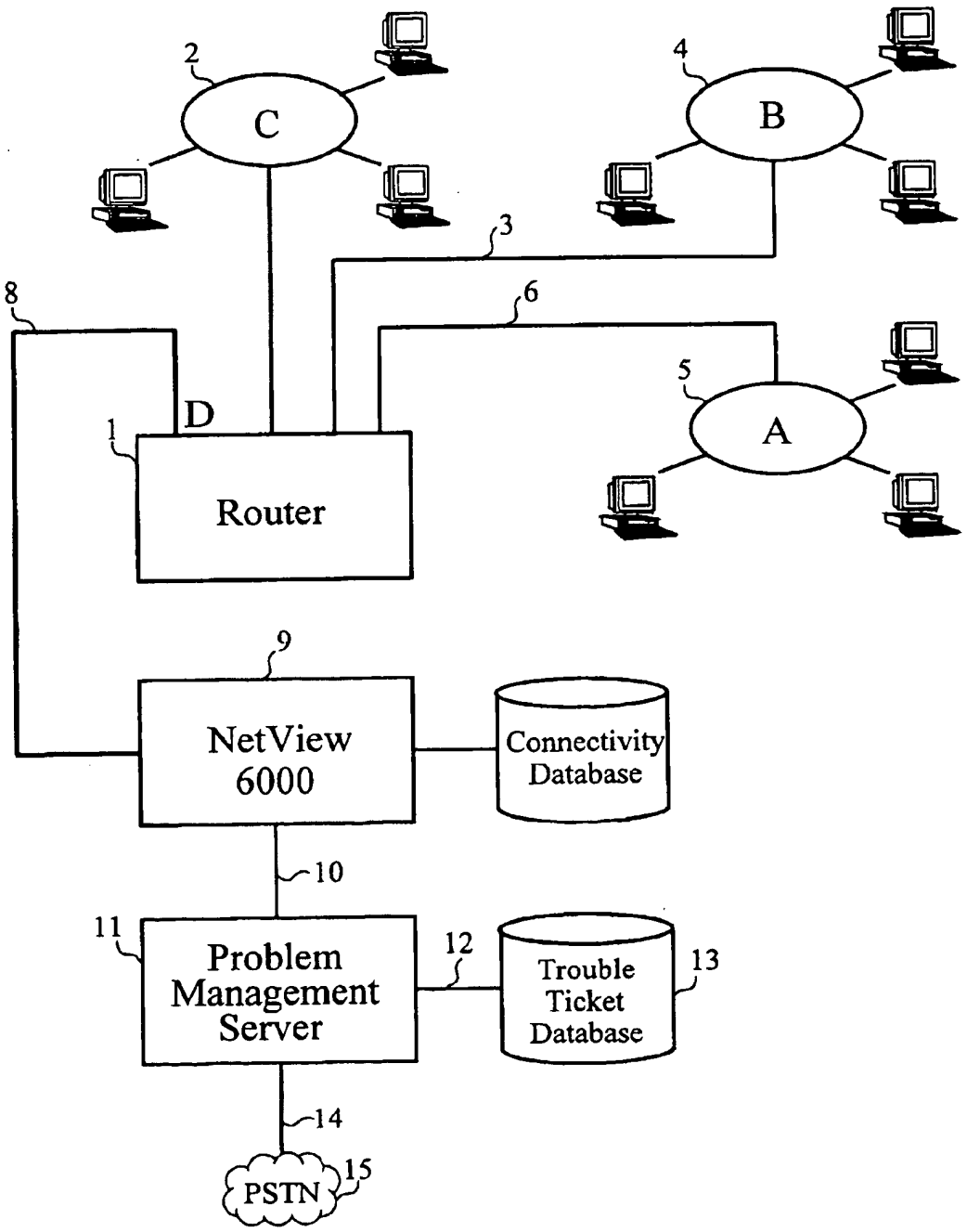

Figure 1

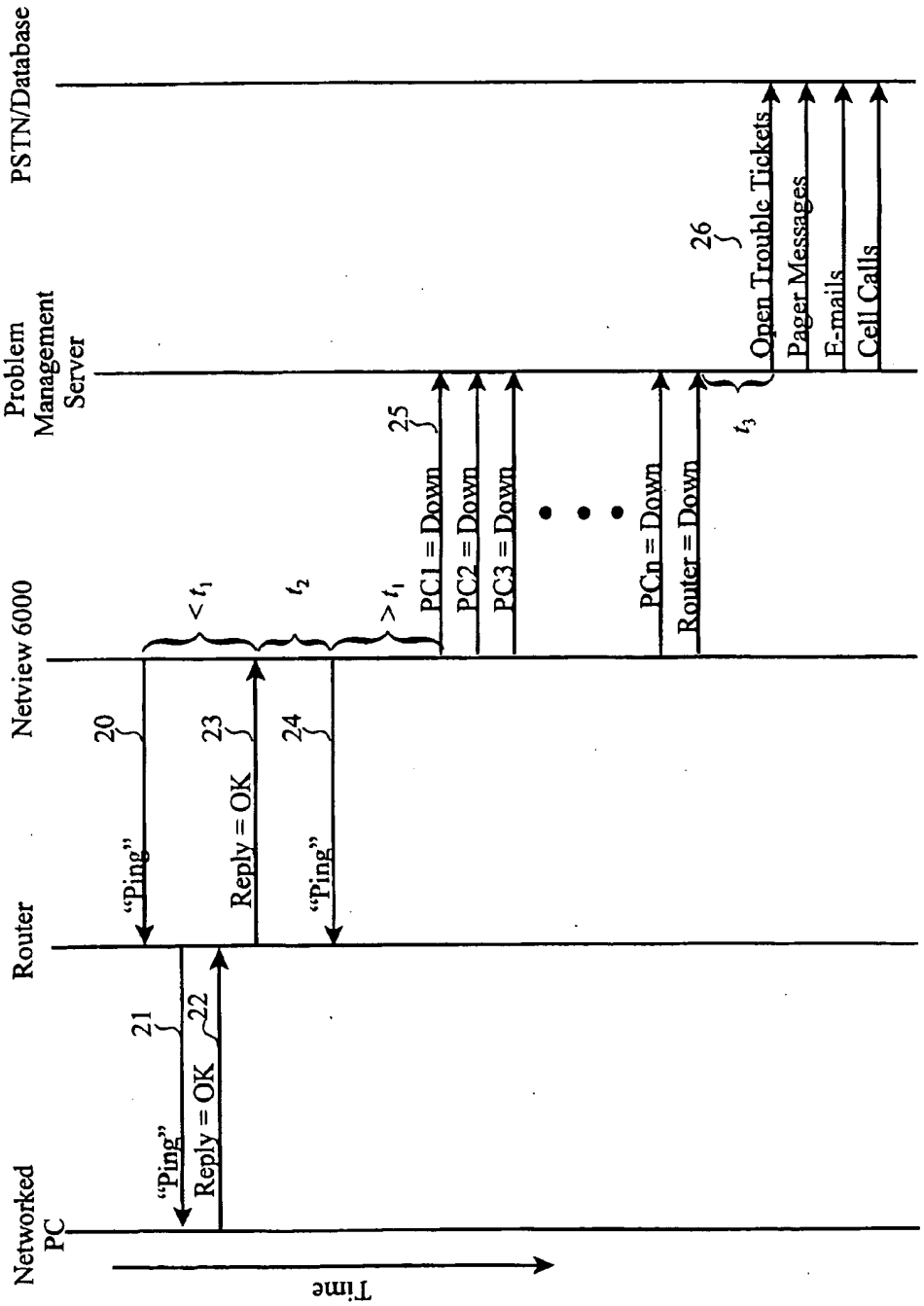
Prior Art
Networked PC
Router
Netview 6000
Problem Management Server
PSTN/Database
Time
"Ping"
Reply = OK
"Ping"
Reply = OK
"Ping"
21
22
20
23
24
< t_1
t_2
> t_1
PC1 = Down
PC2 = Down
PC3 = Down
PCn = Down
Router = Down
25
26
t_3
Open Trouble Tickets
Pager Messages
E-mails
Cell Calls

Figure 2

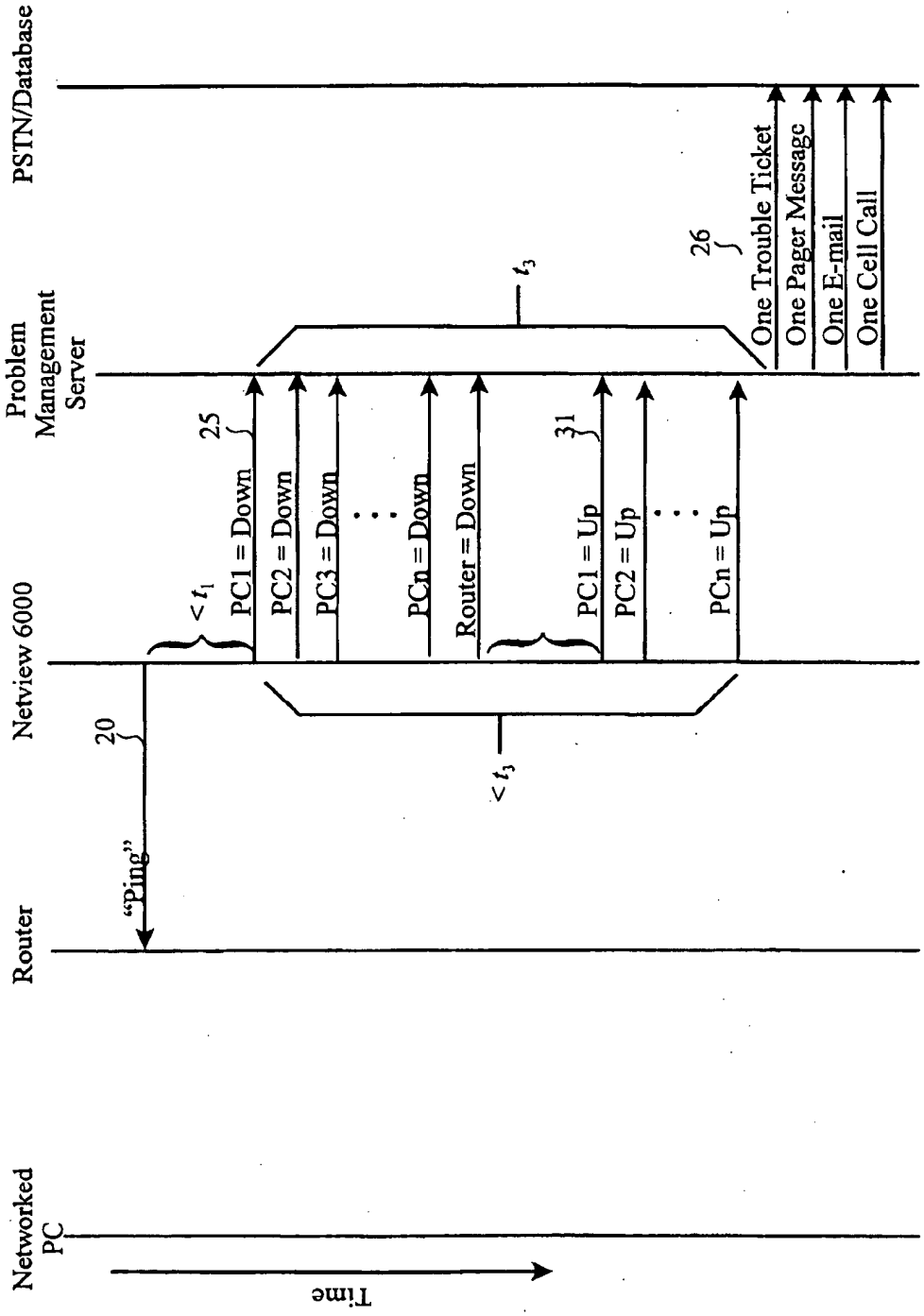
Prior Art
Networked PC
Router
Netview 6000
Problem Management Server
PSTN/Database
Time
"Ping"
20
< t_1
25
PC1 = Down
PC2 = Down
PC3 = Down
PCn = Down
Router = Down
31
PC1 = Up
PC2 = Up
PCn = Up
< t_3
t_3
26
One Trouble Ticket
One Pager Message
One E-mail
One Cell Call

Figure 3

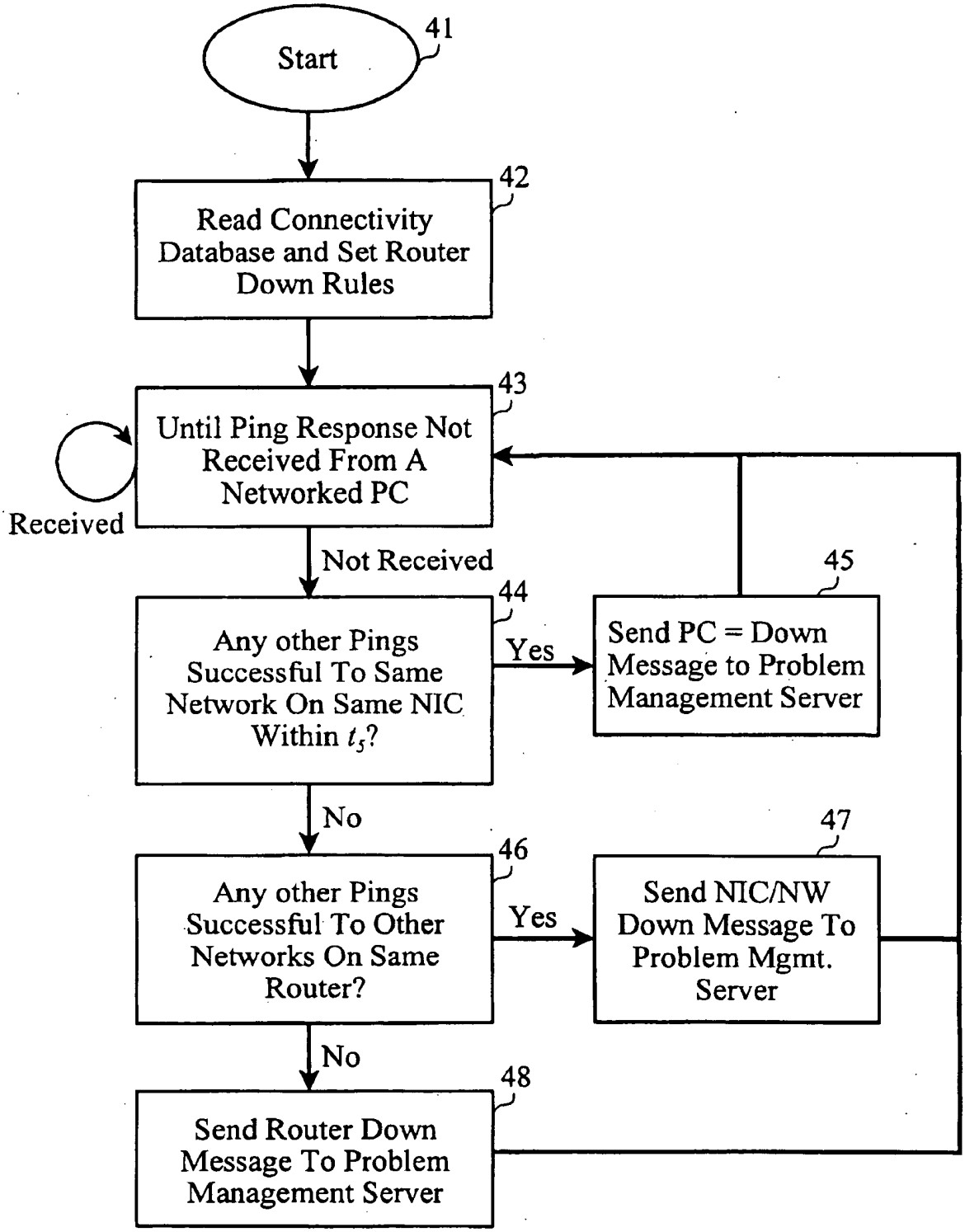
Start
41
Read Connectivity Database and Set Router Down Rules
42
Until Ping Response Not Received From A Networked PC
43
Received
Not Received
Any other Pings Successful To Same Network On Same NIC Within t_5?
44
Yes
Send PC = Down Message to Problem Management Server
45
No
Any other Pings Successful To Other Networks On Same Router?
46
Yes
Send NIC/NW Down Message To Problem Mgmt. Server
47
No
Send Router Down Message To Problem Management Server
48

Figure 4

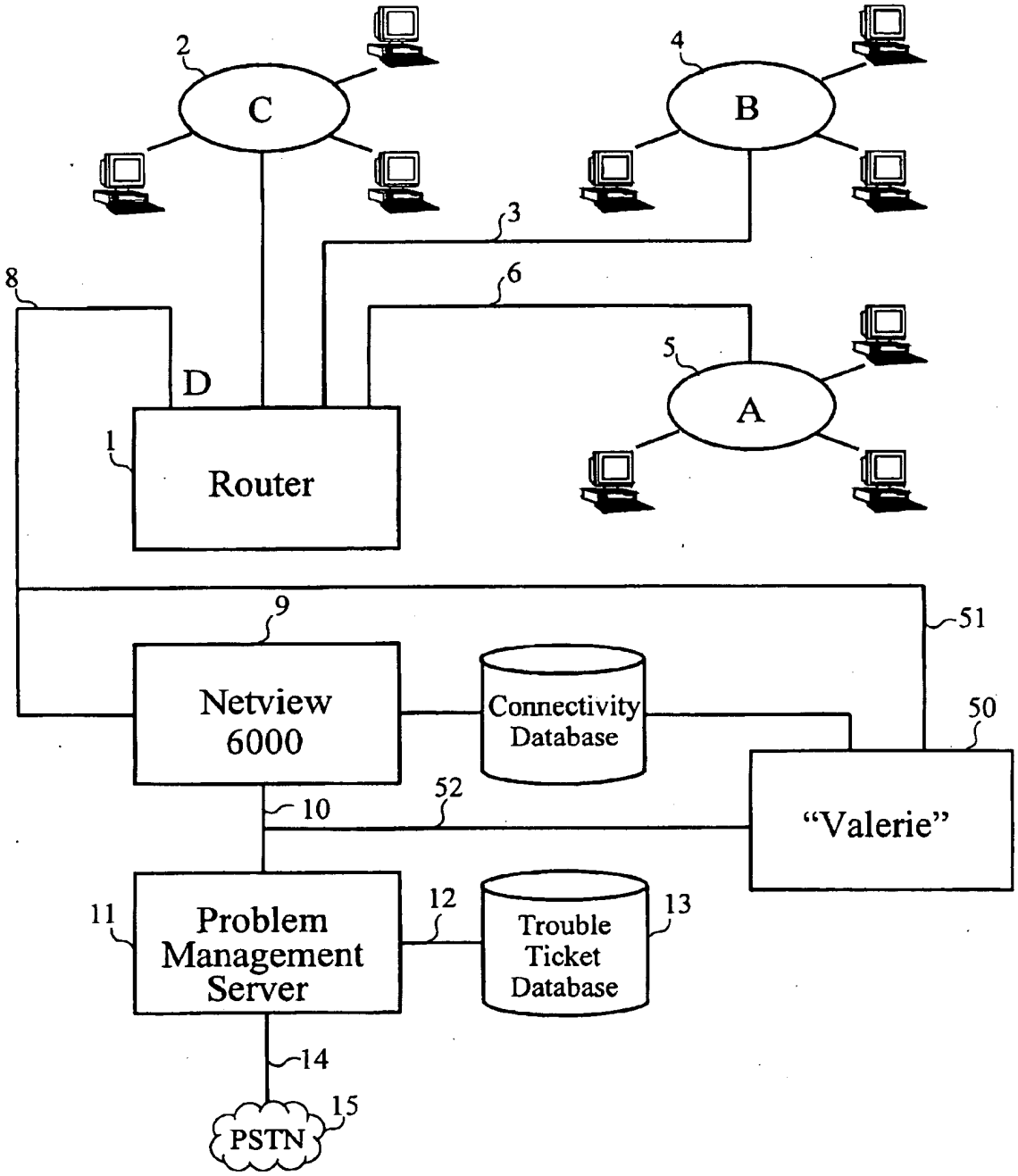
2
C
4
B
3
8
6
5
A
D
1
Router
9
51
Netview
6000
Connectivity
Database
50
52
10
"Valerie"
11
Problem
Management
Server
12
Trouble
Ticket
Database
13
14
15
PSTN

Figure 5

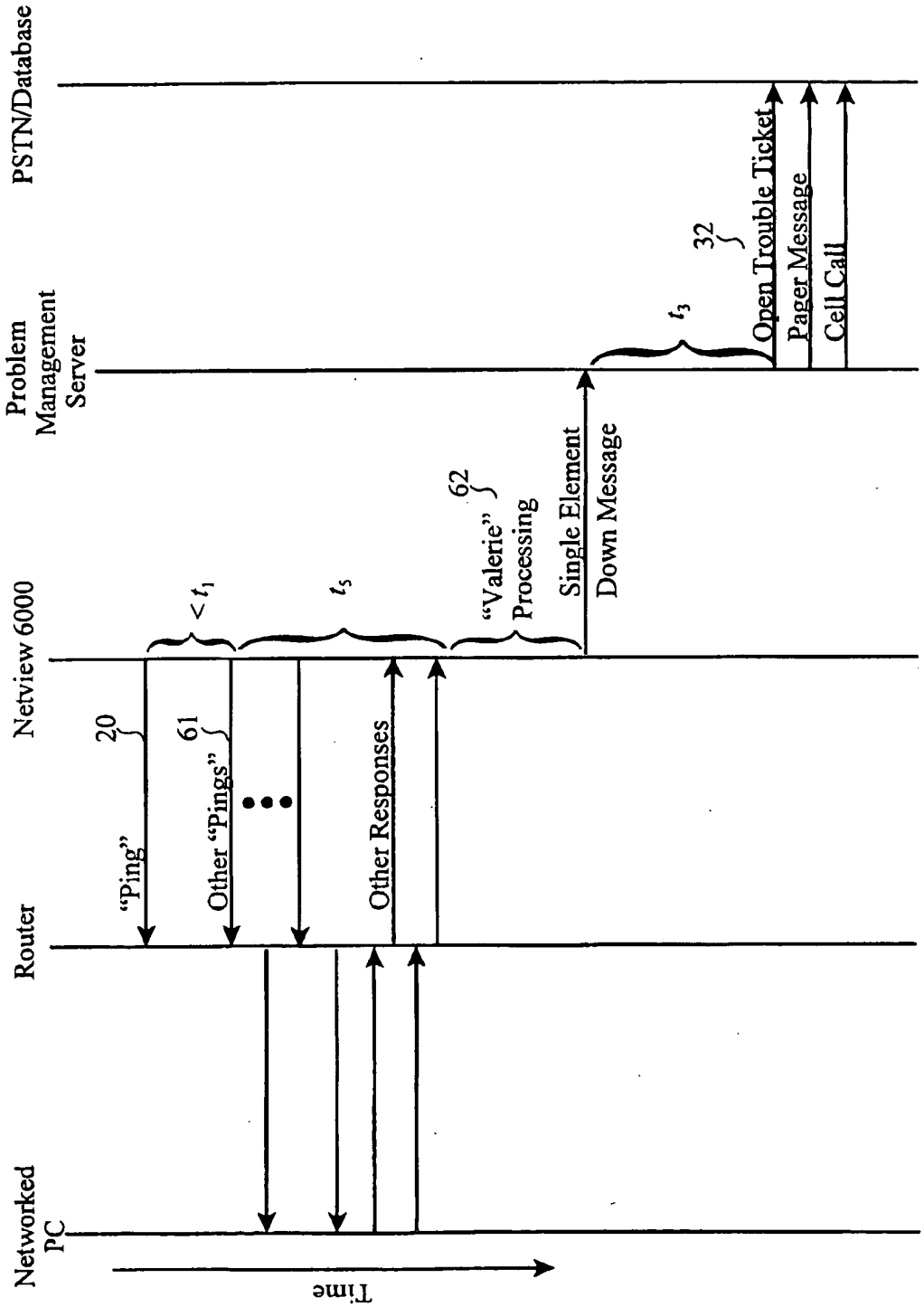
Networked PC
Router
Netview 6000
Problem Management Server
PSTN/Database
Time
"Ping"
20
Other "Pings"
61
Other Responses
$< t_1$
t_5
"Valerie" Processing
62
Single Element Down Message
t_3
32
Open Trouble Ticket
Pager Message
Cell Call

Figure 6

NETWORK FAULT ALERTING SYSTEM AND METHOD

BACKGROUND OF THE INVENTION

1. Field of the Invention

This invention pertains to the arts of computer network management, and especially to the management of network bandwidth consumed by network management, status, and maintenance messages. More particularly, this invention relates to the arts of intelligent processing and diagnosis of network failures and problems based on fault analysis logic to more accurately detect and isolate computer network problems, to minimize the network bandwidth consumed by maintenance messages, and to effectively notify maintenance personnel of the most likely point of failure.

2. Description of the Related Art

Computer networks, such as local area networks ("LAN"), wide-area networks ("WAN"), intranets and the Internet typically include substantial maintenance and monitoring capabilities. Modern telephone networks, such as Signalling System 7 ("SS7), Integrated Services Data Network ("ISDN"), and many digital cellular networks including GSM, also include substantial equipment and software which are dedicated to the provisioning, monitoring and maintenance of the network and its equipment. All of the above named networks are packet-based networks, and are well-known within their respective arts.

Key to the architecture and operation of these networks are packet routers, which interconnect multiple physical networks and provide routing and forwarding of packets, or "messages", from one network to another based upon addressing schemes defined by well-known protocols such as the Internet Protocol ("IP") or LAPD for SS7 and ISDN. These addressing schemes can be generalized as schemes which define each data packet or message has having a header, payload, and tail. The destination address, origination address, packet sequence number, and payload size are typically included in the header section of the message. The payload section contains the actual computer data which is being transferred from one computer to another via the computer network, which may represent a portion of a computer file, a formatted message, or a section of digitized signal such as voice, video or other audio. The various message formats are defined by well-known standards promulgated by InterNIC, the International Telecommunications Union, Bellcore, and ANSI.

In order to manage these networks, including monitoring of network operation status, configuring and re-configuring network elements (routers, terminals and switches), and provisioning of new network sections, a number of well-known software and hardware products have been developed and placed on the market. Most of these products integrate specialized software onto network server platforms. The software uses the network connectivity and bandwidth provided by the network server platform to perform maintenance testing, messaging, status checking, and alert messaging. Many times, the actual network being used for "real" traffic, such as computer file transmission or telephone call transmission, is used for the maintenance communications as well. In this case, the maintenance messages "mix in" with the bandwidth of the "real" traffic. As such, if maintenance messages accumulate to significant bandwidth consumption, network performance may be adversely affected. In other cases, separate networks dedicated to maintenance may be configured to avoid this

problem. But, even so, if maintenance messages exceed an expected bandwidth level, the dedicated maintenance network may fail.

When network management software like Netview/6000 or Hewlett-Packard's OpenView and others, detects a network device such as a router has gone off-line, it will send "node down" events or messages for all the workstations connected downstream from off-line router to network problem management server. The network problem management server provides correlation and processing for opening trouble tickets, and eventually, it send alerts to appropriate maintenance personnel thru pagers, e-mail, and/or telephone calls.

FIG. 1 shows the topology of prior art maintenance systems. A router (1) may have multiple ports to multiple networks. Each port is serviced by a network interface card ("NIC"), such as an Ethernet LAN interface card. FIG. 1 shows an example of a router serving three networks, A, B, and C, each of which is a group of networked computer workstations or personal computers. For example, network A (5) has several "drops" to computers, and one drop or connection (6) to the router. Likewise, network B (4) is connected (3) to the router, and network C (2) is connected (7) to the router. Packets or messages received by the router are forwarded to other networks based on the addressing scheme of the network, such as IP in the case of many computer networks.

Also shown in FIG. 1 is a connection (8) to a maintenance server (9) such as a NetView 6000 server. In this example, this connection (8) connects to the router (1) using the router's NIC for network D. The maintenance server (9) typically contains a connectivity database which contains all of the network addresses of all the elements on the other networks connected to the router, such as all the computers connected to networks A, B, and C. Using this database, the maintenance server (8) periodically sends status query messages, or "pings", to each of the computers. If each computer is on-line, the router is functioning properly, and the network physical media (cable, RF links, etc.) is in tact, a reply will be received from each computer nearly immediately in response to the "ping". If a reply or response is not received within a certain time from transmitting of the "ping", the maintenance server (9) may assume a problem with the computer, router, or network(s) exists.

For example, if all computers and the router are functioning correctly except for one computer, then only one response will not be received, and all other responses will be received. However, if the router fails, no responses will be received from any of the computers. In the most basic of maintenance system configurations such as the basic NetView 6000 product, this scenario can result in a storm of events being sent to the problem management server which correlates events and opens trouble tickets, leading to many useless and/or redundant e-mails and pagers.

FIG. 2 illustrates this scenario. A normal "ping" (20) is forwarded from the NetView 6000 to the router, which forwards (21) it to the appropriate PC. The PC, if functioning properly, replies (22) via the router to the NetView 6000 (23) within a predetermined time limit t_1. If the router has failed, the "ping" (24) will not be replied to by any of the computers within time t_1, which will result in the NetView 6000 sending multiple "computer down" messages (25) to the problem management server. The problem management server is configured to wait a period of time t_3 before escalating the event to notification of the maintenance personnel, in order to reduce the number of alerts made for

temporary problems such as power glitches, computer reboots, etc. But, if no "computer up" messages are received within time limit t_3, the problem management server will send multiple pager messages and telephone calls, and may open multiple trouble tickets (26), as many as one per computer on the network. This results the in the alerting of the maintenance personnel, but is confusing to the personnel as to which element is actually failed, Additionally, the network link between the NetView 6000 server and the problem management server has suffered unnecessary bandwidth consumption by all of the "computer down" messages.

In an enhancement of the prior art network management technology, a product called Tivoli for Network Connectivity module (TFNC) by International Business Machines ("IBM") employs similar concept, but it adds some intelligent processing to the maintenance server. With TFNC, all of the original "computer down" messages will be sent to the problem management server, but, as shown in FIG. 3, the Tivoli processing (30) will examine the network topology and determine that all of these failures are likely due to a single point failure, namely a router failure. So, within the escalation time period t_3, TFNC will send multiple "computer up" messages (31) to the problem management server, which results in a net status of only the "router down" message being escalated by the problem management server. While this enhancement to the network maintenance technology produces a desirable reduction in the number of alerts (pager messages, trouble tickets, etc.) (32) issued to maintenance personnel, it does not reduce the bandwidth consumed by the messages on the network between the maintenance server (TFNC and NetView 6000). Rather, it nearly doubles the bandwidth consumption.

Therefore, there is a need in the art for a system and method which intelligently processing the "ping" response pattern in a timely manner, and which issues a minimal number of "network element down" messages which precisely isolate the most likely point of failure in order to minimize network bandwidth consumption, and to minimize redundant and incorrect maintenance alerts.

BRIEF DESCRIPTION OF THE DRAWINGS

The following detailed description when taken in conjunction with the figures presented herein present a complete description of the present invention.

FIG. 1 shows the prior art topology for network management servers, software, and connectivity.

FIG. 2 discloses the message sequence used in prior art network management technology.

FIG. 3 discloses the enhanced prior art network management technology message sequence.

FIG. 4 illustrates the functional flow of the inventive method which filters and diagnosis the most likely point of failure in the network.

FIG. 5 shows the modified network topology to include a system which implements the inventive method.

FIG. 6 shows the message sequence achieved by use of the inventive method, with substantially reduced network bandwidth requirements and increased accuracy of the alerts.

SUMMARY OF THE INVENTION

The foregoing and other objects, features and advantages of the invention will be apparent from the following more particular description of a preferred embodiment of the invention, as illustrated in the accompanying drawings wherein like reference numbers represent like parts of the invention.

The inventive method is preferably implemented as a software application which will integrate with the existing network management software packages and servers, such as Netview/6000, Hewlett-Packard OpenView, and others. The new software application implements the following general method or logic:

(a) When a router or a network device goes off-line, then it will send only one "network element or router down" event to the problem management server which does the correlation and issues the trouble tickets for alerting. Thus when the router down (network device) event is sent via a pager or email, the network operations personnel will know the router is down, and it is obvious that the devices connected downstream will be offline from the entire network;

(b) When a router NIC, port or interface goes off-line, the same logic should result in only one router down message being sent to the problem management server; and

(c) When a networked element other than a router or NIC, such as a computer, goes off-line, it will send only one "computer down" event to the problem management server.

DETAILED DESCRIPTION OF THE INVENTION

The inventive method is preferably realized as a software application, called "Valerie", which integrates with existing network managment software packages and servers, such as Netview/6000, Hewlett-Packard OpenView, on common network server computer hardware platforms such as an IBM RS/6000.

By the logic of the method, it is assumed that it is not likely that multiple failures occur on the same network simultaneously. An even if multiple failures are detected or indicated, certain patterns to the indications allow for diagnosis of a more likely single point of failure. For example, if all but one of the computers on network A in FIG. 1 are responding to "pings", it is more likely that the non-responsive computer is the failure point as the network wiring, router NIC, and router are still functioning for the other computers on network A. In fact, if even one computer on the network responds, it can be assumed that the network wiring, NMC and router are functioning correctly. However, if the pattern of non-responses includes all of the computers on a network, then the NIC and the router are suspect.

So, in the second step of the logic, if any computers on any other network connected to the router are responding, but all of the computers on just one network are not responding, it can be assumed to be a network wiring or NIC problem with the non-responding network. But, if no computers on any networks are responding, then the router can be assumed to be the single-point of failure.

In order to process the non-responses and the responses in this logical fashion, the Valerie application must have access to the connectivity database which describes the topology of the networks and computers interconnected by the router, and contains the addresses of the computers and other network elements. This database is already available from or through the network maintenance server, typically through a application program interface ("APP"). In the prefered embodiment, Valerie is a software application written in "C", and compiled and targeted for an RS/6000 computer

platform running under the AIX operating system concurrently with NetView/6000. However, other languages, such as Java or C++, platforms, such as a Sun Server or IBM-compatible personal computer, and operating systems, such as Solaris or Microsoft Windows NT, may be used as the target system. In any case, the Valerie application program can access the connectivity database via an API through the NetView or OpenView application. Valerie can also send and receive messages using the platform's communication protocol stack, such as IP, and network interface cards, such as Ethernet interfaces, as well as monitor for messages on the network. The integration of Valerie into the overall network management technology is completed by disabling the "element down/element up" message output capability of the NetView or OpenView software, and by enabling the output of the Valerie logic results. Valerie's logic can be triggered by the results of the monitoring activity, or more actively by "trapping" the output event from the NetView or OpenView software.

FIG. **4** summarizes the logic of Valerie in a functional flow depiction. When Valerie is started **(41)**, it reads the connectivity database and develops rules based on the network connectivity related to the router. Then, it periodically sends "ping" messages **(43)** to each element connected to the router. Alternatively, it may simply monitor the network for "pings" from the NetView application to each network element. These "pings" can be sent at any interval rate, but are sent at approximately 5 minute intervals in the preferred embodiment. Until a response is not received within a determined time limit, such as 5 minutes, the period "pings" continue. But when one or more responses are not received within the time limit, the logic processing begins. First, a recent history log is examined **(44)** to determine if any other computers on the same network or router NIC have been received. If so, then a single "element down" message for the non-responding element or computer is sent **(45)** to the problem management server.

If no other responses have been received recently from other elements or computers on the same network, then the history log is examined **(46)** to see if any other computers or elements on any other networks connected to the router have been received. If so, then the router NIC and/or network cabling for the the non-responsive network is assumed to be the point of failure, and a single "NIC or network down" message is sent **(47)** to the problem management server.

However, if no other elements or computers on any of the networks connected to the router have responded recently, then a single "router down" message is sent **(48)** to the problem management server.

In this embodiment of the invention, the history log can be built and updated by Valerie actively transmitting "pings" to network elements and registering the received responses. Or, it can be built passively by Valerie monitoring (or "snooping") the network for "pings" and responses between network elements and the network management software application (NetView/6000 or OpenView).

In an alternate embodiment of the invention, the history log is updated by quickly issuing new "pings" to all other network elements when a single response is not received within the time limit. This allows the fault deduction logic to operate on more recent data, giving a more accurate result.

Finally, turning to FIG. **6**, the reduced message bandwidth realized by the invention is noticable. Following the Valeria processing **(62)**, a single "element down" message is sent to the problem management server by the enhanced maintenance server, shown here as NetView/6000 with Valerie.

It will be understood from the foregoing description that various modifications and changes may be made in the preferred embodiment of the present invention without departing from its true spirit, such as the use of alternate programming methodologies or languages, alternate server platforms, various networking protocols, operating systems and development tool sets. It is intended that this description is for purposes of illustration only and should not be construed in a limiting sense. The scope of this invention should be limited only by the language of the following claims.

What is claimed is:

1. A method of producing failure alerts in a computer network containing a plurality of networked elements including at least one network router, at least one network management server, and at least one problem management server, said router being interconnected to several subnetworks, each subnetwork interconnecting several networked elements, said method comprising the steps of:

monitoring transmissions via a computer network at least one status query message to each of said networked elements in said computer network;

initiating a timer for awaiting receipt of valid status responses from each networked element in reply to each status query message;

performing a fault tree analysis to determine the most likely single point of failure based upon a rule structure related to the topology of the computer network, said performance of fault tree analysis being invoked by expiration of the timer if less than all status responses are received;

transmitting via a computer network to said problem management server at least one element failed message for said determined single point of failure such that said problem management server is notified of the most likely point of failure;

receiving via a computer network one or more network element failed messages transmitted from said network management server;

selecting one network element failed message based upon results of said fault tree analysis; and

forwarding said selected network element failed message to said problem management server via a computer network, thereby, blocking the forwarding of all other network element failed messages received from the network management server from being received by said problem management server.

2. A method of producing failure alerts in a computer network as set forth in claim **1** further comprising the steps of:

accessing a computer-readable media disposed in said network management server to obtain computer network connectivity and topology data; and

initiating said rule structure based upon said accessed computer network connectivity and topological data.

3. A method of producing failure alerts in a computer network as set forth in claim **2**, wherein the step of performing fault tree analysis further comprises the step of determining that a single element on a subnetwork is failed only if no response has been received from that single element and other responses have been received from other networked element on the same subnetwork within a predetermined amount of time.

4. A method of producing failure alerts in a computer network as set forth in claim **2**, wherein the step of performing fault tree analysis further comprises the step of

determining that a router interface, network interface card or port is failed only if no responses have been received from any of the networked elements on the subnetwork associated with that router interface, network interface card or port, and only if other responses have been received from other networked elements on other subnetworks associated with other router interfaces, network interface cards, and ports on the same router within a predetermined amount of time.

5. A method of producing failure alerts in a computer network as set forth in claim **2**, wherein the step of performing fault tree analysis further comprises the step of determining that a router is failed only if no responses have been received from any networked elements on any subnetworks associated with any of the router's interfaces, network interface cards, and ports within a predetermined amount of time.

6. A method of producing failure alerts in a computer network as set forth in claim **1**, further comprising the following steps after expiration of the timer and prior to performance of the fault tree analysis:

immediately retransmitting all status query messages to all networked elements upon the expiration of the timer; and

re-initiating a timer for awaiting receipt of valid status responses from each networked element in reply to each retransmitted status query message, such that said step of performing fault tree analysis may be performed using a set of recently received responses from the networked elements.

7. A method of producing failure alerts in a computer network as set forth in claim **6**, wherein said re-initiated timer is set for an expedited expiration, its expiration value being significantly shorter than the value of its normally initiated value.

8. A computer program product for use with network management server in a computer network, said computer network containing a plurality of networked elements including at least one network router, at least one network management server, and at least one problem management server, said router being interconnected to several subnetworks, each subnetwork interconnecting several networked elements, said computer program product comprising:

a computer usable medium having computer readable program code means embodied in said medium for monitoring transmissions via a computer network at least one status query message to each of said networked elements in said computer network;

a computer usable medium having computer readable program code means embodied in said medium for initiating a timer for awaiting receipt of valid status responses from each networked element in reply to each status query message;

a computer usable medium having computer readable program code means embodied in said medium for performing a fault tree analysis to determine the most likely single point of failure based upon a rule structure related to the topology of the computer network, said performance of adult tree analysis being invoked by expiration of the timer if less than all status responses are received

a computer usable medium having computer readable program code means embodied in said medium for transmitting via a computer network to said problem management server at least one element failed message for said determined single point of failure such that said problem management server is notified of the most likely point of failure;

a computer usable medium having computer readable program code means embodied in said medium for receiving via a computer network one or more network element failed messages transmitted from said network management server;

a commuter usable medium having computer readable program code means embodied in said medium for selecting one network element failed message based upon results of said fault tree analysis; and

a computer usable medium having computer readable program code means embodied in said medium for forwarding said selected network element failed message to said problem management server via a computer network, thereby blocking the forwarding of all other network element failed messages received from the network management server from being received by said problem management server.

9. A computer program product for use with network management server in a computer network as set forth in claim **8** further comprising:

a computer usable medium having computer readable program code means embodied in said medium for accessing a computer-readable media disposed in said network management server to obtain computer network connectivity and topology data; and

a computer usable medium having computer readable program code means embodied in said medium for initiating said rule structure based upon said accessed computer network connectivity and topological data.

10. A computer program product for use with network management server in a computer network as set forth in claim **8** wherein the computer readable code for performing fault tree analysis further comprises computer readable program code means embodied in said medium for determining that a single element on a subnetwork is failed only if no response has been received from that single element and other responses have been received from other networked element on the same subnetwork within a predetermined amount of time.

11. A computer program product for use with network management server in a computer network as set forth in claim **8** wherein the computer readable code for performing fault tree analysis further comprises computer readable program code means embodied in said medium for determining that a router interface, network interface card or port is failed only if no responses have been received from any of the networked elements on the subnetwork associated with that router interface, network interface card or port, and only if other responses have been received from other networked elements on other subnetworks associated with other router interfaces, network interface cards, and ports on the same router within a predetermined amount of time.

12. A computer program product for use with network management server in a computer network as set forth in claim **8** wherein the computer readable code for performing fault tree analysis further comprises computer readable program code means embodied in said medium for determining that a router is failed only if no responses have been received from any networked elements on any subnetworks associated with any of the router's interfaces, network interface cards, and ports within a predetermined amount of time.

13. A computer program product for use with network management server in a computer network as set forth in claim **8**, firer comprising:

a computer usable medium having computer readable program code means embodied in said medium for immediately retransmitting all status query messages to all networked elements upon the expiration of the timer; and

a computer usable medium having computer readable program code means embodied in said medium for re-initiating a timer for awaiting receipt of valid status responses from each networked element in reply to each retransmitted status query message, such that said fault tree analysis may be performed using a set of recently received responses from the networked elements.

14. A network management server system for producing failure alerts in a computer network, said computer network having at least one network router interconnected to several subnetworks, a plurality of networked elements interconnected via said subnetworks and to said network routers, and at least one problem management server for escalation of failure alerts and notification of failures to maintenance personnel, said network management server system comprising:

a network server including a computer hardware platform with a processor and computer-readable medium for storing data and program code, a network communications protocol stack, a network management software suite, and at least one means for communication to networked elements, router and problem management server via said computer network;

a status monitor which monitors status replies from said networked elements made in response to status queries from said network management software suite;

a failure analyzer invoked by said network management software suite upon the failure to receive one or more status replies from said networked elements, said failure analyzer performing fault tree analysis to determine the most likely point of failure in the computer network;

a problem management server notifier which transmits a network element failed message to the problem management server via a computer network, said network element failed message including an indicator corresponding to said most likely point of failure as determined by the failure analyzer; and

a message forwarder which receives via a computer network one or more network element failed messages transmitted from said network management server; selects one network element failed message based upon results of said fault tree analysis; and forwards said selected network element failed message to said problem management server via a computer network thereby blocking the forwarding of all other network element failed messages received from the network managment server from being received by said problem management server.

15. A network management server system for producing failure alerts in a computer network as set forth in claim **14**, wherein said failure analyzer further comprises:

a set of rules for determining the most likely point of failure based upon a predetermined topological interrelationship between the networked elements, the subnetworks, and the routers and their interfaces to the subnetworks; and

a comparator which applies the rules to a set of information containing all the status replies received from networked elements within a predetermined time period, said comparator producing an output corresponding to a most likely point of failure of the network.

16. A network management server system for producing failure alerts in a computer network as set forth in claim **15**, wherein said set of rules comprise a rule that declares a networked element to be failed only if no status reply from the networked element is found in the set of information being analyzed by the analyzer, and only if at least one status reply from any other networked element on the same subnetwork is found in the set of information being analyzed by the analyzer.

17. A network management server system for producing failure alerts in a computer network as set forth in claim **15**, wherein said set of rules comprise a rule that declares a suspect network router interface, network interface card, and port to be failed only if no status reply from any networked element on the subnetwork associated with the suspect network router interface, network interface card, and port is found in the set of information being analyzed by the analyzer, and only if at least one status reply from any other networked element on any other subnetwork associated with any other router interface, network interface card, and port on the same network router is found in the set of information being analyzed by the analyzer.

18. A network management server system for producing failure alerts in a computer network as set forth in claim **15**, wherein said set of rules comprise a rule that declares a suspect network router to be failed only if no status reply from any networked element any subnetwork associated any network interface card or port associated with the suspect network is found in the set of information being analyzed by the analyzer.

19. A network management server system for producing failure alerts in a computer network as set forth in claim **14** further comprising a status refresher which immediately transmits a status query message to each networked element upon the invocation of the failure analyzer in order to update the set of replies received and allow analysis on more recent status of the network to be performed.

20. A network management server system for producing failure alerts in a computer network as set forth in claim **14** wherein said status monitor, fault analyzer and problem management server notifier are application programs interfaced to a standard network management server software suite.

21. A network management server system for producing failure alerts in a computer network as set forth in claim **20** wherein said application programs are "C" programs compiled and targeted for execution by said computer hardware platform.

22. A network management server system for producing failure alerts in a computer network as set forth in claim **20** wherein said standard network management server software suite is a NetView suite.

23. A network management server system for producing failure alerts in a computer network as set forth in claim **20** wherein said standard network management server software suite is an OpenView suite.

24. A network management server system for producing failure alerts in a computer network as set forth in claim **20** wherein said computer hardware platform is an RS/6000 computer platform running an AIX operating system, both of which are International Business Machines products.

* * * * *

UNITED STATES PATENT AND TRADEMARK OFFICE

COMMISSIONER FOR PATENTS
UNITED STATES PATENT AND TRADEMARK OFFICE
WASHINGTON, D.C. 20231
www.uspto.gov

Paper No. 9

MARTIN & FERRARO, LLP
14500 AVION PARKWAY, SUITE 300
CHANTILLY, VA 20151-1101

COPY MAILED

NOV 1 5 2001

OFFICE OF PETITIONS

In re Application of
Michelson
Application No. 09/497,590
Filed: June 6, 2000
Attorney Docket No. 101.0044-03000

DECISION GRANTING PETITION

This is a decision on the petition under 37 CFR 1.182, filed on June 6, 2000, requesting that the above-identified application be accorded "a later filing date."

The application was originally filed on February 3, 2000. However, on April 18, 2000, the Initial Patent Examination Division mailed a Notice of Omitted Items in a Nonprovisional application ("Notice") advising applicant that the February 3, 2000 filing date had been accorded the application, but that pages 45, 58 and 68 of the specification appeared to have been omitted.

In response, on June 6, 2000, the present petition was filed accompanied by a complete copy of the specification including pages 45, 58 and 68 and a copy of a signed declaration.

Since a petition under 37 CFR 1.182 and a copy of the omitted items, i.e., pages 45, 58 and 68, have been filed in response to the Notice, the petition is understood as requesting that the application be accorded a filing date of June 6, 2000, the date the omitted items were filed (See option II in Notice).

The petition is **GRANTED**.

A newly executed oath or declaration is not required under 37 CFR 1.51(b)(2) and 1.53(f) in a continuation or divisional application, provided that the specification and drawings filed in the continuation or divisional application contain no matter that would have been new matter in the prior application. See 37 CFR 1.63(d)(1). For initial processing purposes, it is presumed that the specification filed June 6, 2000, contains no matter that would have been new matter in the prior application. Thus, the application will be processed using the copy of the declaration supplied on June 6, 2000. No surcharge is required, since the declaration was present on the June 6, 2000 filing date accorded the application.

The continuity data for this application has been corrected as requested in the request for a corrected filing receipt filed June 6, 2000.

The application is being returned to Initial Patent Examination Division for further processing with a filing date of June 6, 2000, using the drawings supplied on February 3, 2000 and the specification and signed declaration filed on June 6, 2000.

Telephone inquiries concerning this matter may be directed to Petitions Attorney RC Tang at (703) 308-0763.

Beverly M. Flanagan
Supervisory Petitions Attorney
Office of Petitions
Office of the Deputy Commissioner
for Patent Examination Policy

UNITED STATES PATENT AND TRADEMARK OFFICE

Commissioner for Patents
United States Patent and Trademark Office
P.O. Box 1450
Alexandria, VA 22313-1450
www.uspto.gov

MARTIN & FERRARO, LLP
1557 LAKE O'PINES STREET, NE
HARTVILLE OH 44632

JUN 04 2007

In re Application of:
Michelson, Gary K.
Serial No. 09/497590
Filed: June 06, 2000
Docket: 101-0044-03000
Title: APPARATUS FOR INSERTING SPINAL IMPLANTS

DECISION ON PETITION UNDER 37 CFR § 1.144

This is a decision on the petition filed March 31,2006 under 37 CFR § 1.144 requesting modification of the election requirement. Petitioner authorized a fee of $130.00 be charged to Deposit Account No. 50-3726 under 37 CFR § 1.17(h) for handling of the petition.

The petition is dismissed.

The examiner construed the petition as a request for reconsideration and in finding petitioner's points of argument persuasive, granted applicant's requests in a non-final Office action mailed August 26, 2006. In view of the examiner's action, decision on the petition is moot and subject to dismissal.

There is no fee for a petition under 37 CFR § 1.144. Therefore, petitioner may request a refund under 37 CFR § 1.26 in a separate letter addressed to the USPTO as provided for under 37 CFR § 1.1(a). A copy of this decision should be attached to the letter. Questions regarding the refund may be directed to the Office of Finance at 571-272-6500.

PETITION DISMISSED.

Any inquiry regarding this decision should be directed to Allan N. Shoap, Special Programs Examiner, at (571) 272-4514.

Karen M. Young
for Frederick R. Schmidt, Director
Technology Center 3700

UNITED STATES PATENT AND TRADEMARK OFFICE

COMMISSIONER FOR PATENTS
UNITED STATES PATENT AND TRADEMARK OFFICE
P.O. BOX 1450
ALEXANDRIA, VA 22313-1450
www.uspto.gov

Paper No.

MARTIN & FERRARO, LLP
1557 LAKE O'PINES STREET, NE
HARTVILLE OH 44632

COPY MAILED

JUL 07 2008

OFFICE OF PETITIONS

In re Application of :
Gary Michelson : DECISION ON APPLICATION
Application No. 09/497,590 : FOR
Filed: June 6, 2000 : PATENT TERM ADJUSTMENT
Atty Docket No. 101.0044-03000:

This is a decision on the "APPLICATION FOR PATENT TERM ADJUSTMENT," filed May 29, 2008. Applicant requests that the initial determination of patent term adjustment under 35 U.S.C. 154(b) be corrected from one thousand one hundred ninety-three (1193) days to one thousand two hundred twenty-one (1221) days.

The application for patent term adjustment is **DISMISSED**.

For the reasons stated herein, the Office has updated the PAIR screen to reflect that the correct Patent Term Adjustment (PTA) determination at the time of the mailing of the Notice of Allowance is one thousand one hundred eighty **(1180)** days. A copy of the updated PAIR screen, showing the correct determination, is enclosed.

On March 18, 2008, the Office mailed the Determination of Patent Term Adjustment under 35 U.S.C. 154(b) in the above-identified application. The Notice stated that the patent term adjustment (PTA) to date is 1193 days. On May 29, 2008, applicant timely submitted the instant application for patent term adjustment[1]. In effect, applicant contends that the date of mailing of a non-final Office action on August 28, 2006, and not the date of mailing of a final Office action on June 23, 2006, should be used in calculating the Office delay for taking action in excess

[1] PALM records indicate that the Issue Fee payment was also filed on May 29, 2008.

of four months to respond to their response after non-final Office action filed March 31, 2006. On that basis, applicant requests entry of a 28 day period of adjustment for Office delay.

Applicant's argument has been considered, but is not well taken. Pursuant to 37 C.F.R. § 1.702(a)(2),

> Subject to the provisions of 35 U.S.C. 154(b) and this subpart, the term of an original patent shall be adjusted if the issuance of the patent was delayed due to the failure of the Office to:
>
> (2) Respond to a reply under 35 U.S.C. 132 or to an appeal taken under 35 U.S.C. 134 not later than four months after the date on which the reply was filed or the appeal was taken;

On March 31, 2006, applicant filed a response to a non-final Office action. On June 23, 2006, the Office mailed a final Office action. This was within four months. Thus, no period of adjustment was entered for Office delay pursuant to 37 CFR 1.702(a)(2).

On March 31, 2006, applicant also filed a PETITION UNDER 37 C.F.R. §1.144, requesting modification of the restriction requirement. The examiner construed the petition as a request for reconsideration and in finding petitioner's points of argument persuasive, granted applicant's requests in the non-final Office action mailed August 28, 2006. The examiner's subsequent reconsideration and mailing of a non-final Office action does not negate the fact that the Office first took action in this application within the meaning of § 1.702(a)(2) on June 23, 2006. The mailing of another Office action on August 28, 2006 does not constitute Office delay.

However, a review of the application history reveals that correction of the initial determination of patent term adjustment is required. The review revealed a basis for entry of an additional period of reduction for applicant delay. 37 CFR 1.704(c)(8) provides that:

> Submission of a supplemental reply or other paper, other than a supplemental reply or other paper expressly requested by the examiner, after a reply has been filed, in

> which case the period of adjustment set forth in § 1.703 shall be reduced by the number of days, if any, beginning on the day after the date the initial reply was filed and ending on the date that the supplemental reply or other such paper was filed;

In this instance, after filing a response on June 17, 2007, on June 30, 2007, applicant filed a supplemental response. The record does not support a conclusion that this supplemental response was expressly requested by the examiner. Accordingly, an additional period of reduction of 13 days is being entered for applicant delay pursuant to 37 CFR 1.704(c)(8).

In view thereof, the determination of patent term adjustment at the time of the mailing of the Notice of Allowance is one thousand one hundred eighty (1180) days.

Receipt of the $200.00 fee set forth in 37 CFR 1.18(e) is acknowledged. No additional fees are required.

The application is being forwarded to the Office of Patent Publication for issuance of the patent. The patent term adjustment indicated on the patent will include any additional adjustment accrued both for Office delay in issuing the patent more than four months after payment of the issue fee and satisfaction of all outstanding requirements, and for the Office taking in excess of three years to issue the patent (to the extent that the three-year period does not overlap with periods already accorded).

Telephone inquiries specific to this decision should be directed to the undersigned at (571) 272-3219.

Nancy Johnson
Senior Petitions Attorney
Office of Petitions

Day : Wednesday

PALM INTRANET

Date: 7/2/2008
Time: 10:21:12

PTA Calculations for Application: 09/497590			
Application Filing Date:	06/06/2000	PTO Delay (PTO):	1321
Issue Date of Patent:		Three Years:	0
Pre-Issue Petitions:	0	Applicant Delay (APPL):	128
Post-Issue Petitions:	0	Total PTA (days):	1180
PTO Delay Adjustment:	-13		

File Contents History

Number	Date	Contents Description	PTO	APPL	START
87	07/02/2008	ADJUSTMENT OF PTA CALCULATION BY PTO		13	
80	03/18/2008	MAIL NOTICE OF ALLOWANCE	166		73
79	08/27/2007	ISSUE REVISION COMPLETED			
78	08/27/2007	DOCUMENT VERIFICATION			
77	08/24/2007	NOTICE OF ALLOWANCE DATA VERIFICATION COMPLETED			
76	08/20/2007	NOTICE OF ALLOWABILITY			
75	06/04/2007	NEW OR ADDITIONAL DRAWING FILED			
74	06/07/2007	DATE FORWARDED TO EXAMINER			
73	06/04/2007	RESPONSE AFTER EX PARTE QUAYLE ACTION		18	68
72	06/05/2007	MAIL-PETITION DECISION - DISMISSED			
71	03/31/2006	PETITION ENTERED			
70	05/23/2007	MAIL NOTICE OF INFORMAL OR NON-RESPONSIVE AMENDMENT			
69	05/23/2007	DATE FORWARDED TO EXAMINER			
68.1	05/17/2007	INFORMAL OR NON-RESPONSIVE AMENDMENT AFTER EXAMINER ACTION			
68	05/17/2007	RESPONSE AFTER EX PARTE QUAYLE ACTION			
67	05/17/2007	NEW OR ADDITIONAL DRAWING FILED			
66	05/01/2007	MAIL EX PARTE QUAYLE ACTION (PTOL - 326)			
65	04/30/2007	EX PARTE QUAYLE ACTION			
64	01/17/2007	INFORMATION DISCLOSURE STATEMENT CONSIDERED			
63	02/22/2007	DATE FORWARDED TO EXAMINER			
62	01/30/2007	SUPPLEMENTAL RESPONSE			
61	01/17/2007	REFERENCE CAPTURE ON IDS			
60.7	01/17/2007	INFORMATION DISCLOSURE STATEMENT (IDS)			

		FILED			
60	01/17/2007	INFORMATION DISCLOSURE STATEMENT (IDS) FILED			
59	01/17/2007	NEW OR ADDITIONAL DRAWING FILED			
58	02/02/2007	DATE FORWARDED TO EXAMINER			
57	01/17/2007	RESPONSE AFTER NON-FINAL ACTION		50	53
56	01/17/2007	REQUEST FOR EXTENSION OF TIME - GRANTED			
55	10/05/2006	CASE DOCKETED TO EXAMINER IN GAU			
54	08/28/2006	MAIL NOTICE OF WITHDRAWN ACTION			
53	08/28/2006	MAIL NON-FINAL REJECTION			
52	08/22/2006	NON-FINAL REJECTION			
51	08/22/2006	LETTER WITHDRAWING / VACATING OFFICE ACTION			
50	06/23/2006	MAIL FINAL REJECTION (PTOL - 326)			
49	06/08/2006	FINAL REJECTION			
48	03/31/2006	INFORMATION DISCLOSURE STATEMENT CONSIDERED			
47	03/31/2006	REFERENCE CAPTURE ON IDS			
46.7	03/31/2006	INFORMATION DISCLOSURE STATEMENT (IDS) FILED		0	44
46	03/31/2006	INFORMATION DISCLOSURE STATEMENT (IDS) FILED			
45	04/10/2006	DATE FORWARDED TO EXAMINER			
44	03/31/2006	RESPONSE AFTER NON-FINAL ACTION		30	42
43	03/31/2006	REQUEST FOR EXTENSION OF TIME - GRANTED			
42	12/01/2005	MAIL NON-FINAL REJECTION			
41	11/28/2005	NON-FINAL REJECTION			
40	09/17/2005	DATE FORWARDED TO EXAMINER			
39	09/13/2005	RESPONSE TO ELECTION / RESTRICTION FILED			
38	08/24/2005	MAIL RESTRICTION REQUIREMENT			
37	08/22/2005	REQUIREMENT FOR RESTRICTION / ELECTION			
36	05/26/2005	DATE FORWARDED TO EXAMINER			
35	05/12/2005	RESPONSE AFTER NON-FINAL ACTION		30	33
34	05/12/2005	REQUEST FOR EXTENSION OF TIME - GRANTED			
33	01/12/2005	MAIL NON-FINAL REJECTION			
32	01/10/2005	NON-FINAL REJECTION			

31	11/04/2004	DATE FORWARDED TO EXAMINER			
30	11/02/2004	RESPONSE TO ELECTION / RESTRICTION FILED			
29	10/04/2004	MAIL RESTRICTION REQUIREMENT	1155		-1
28	10/01/2004	REQUIREMENT FOR RESTRICTION / ELECTION			
27	09/10/2004	PRELIMINARY AMENDMENT			
26	09/10/2004	WORKFLOW INCOMING AMENDMENT IFW			
25	06/02/2004	CLAIMS PTO			
24	06/02/2004	PRELIMINARY AMENDMENT			
23	06/02/2004	WORKFLOW INCOMING AMENDMENT IFW			
22	03/19/2004	IFW TSS PROCESSING BY TECH CENTER COMPLETE			
21	03/17/2004	CLAIMS PTO			
20	03/18/2004	REFERENCE CAPTURE ON IDS			
19	05/01/2002	PRELIMINARY AMENDMENT			
18	06/06/2000	PRELIMINARY AMENDMENT			
17.7	02/16/2001	INFORMATION DISCLOSURE STATEMENT (IDS) FILED			
17	02/16/2001	INFORMATION DISCLOSURE STATEMENT (IDS) FILED			
16.7	10/06/2003	INFORMATION DISCLOSURE STATEMENT (IDS) FILED			
16	10/06/2003	INFORMATION DISCLOSURE STATEMENT (IDS) FILED			
15.7	09/22/2003	INFORMATION DISCLOSURE STATEMENT (IDS) FILED			
15	09/22/2003	INFORMATION DISCLOSURE STATEMENT (IDS) FILED			
14	10/01/2003	APPLICATION MADE UNAVAILABLE FOR EXAMINATION			
13.7	06/06/2000	INFORMATION DISCLOSURE STATEMENT (IDS) FILED			
13	06/06/2000	INFORMATION DISCLOSURE STATEMENT (IDS) FILED			
12	06/25/2002	CASE DOCKETED TO EXAMINER IN GAU			
11	04/04/2002	TRANSFER INQUIRY TO GAU			
10	01/23/2002	APPLICATION DISPATCHED FROM OIPE			
9	01/24/2002	APPLICATION IS NOW COMPLETE			
8	06/06/2000	INITIAL EXAM TEAM NN			
7	11/16/2001	MAIL-PETITION DECISION - GRANTED			

6	06/06/2000	PETITION ENTERED			

Search Another: Application# Search

EXPLANATION OF PTA CALCULATION

EXPLANATION OF PTE CALCULATION

To go back, right click here and select Back. To go forward, right click here and select Forward. To refresh, right click here and select Refresh.

Back to OASIS | Home page

UNITED STATES PATENT AND TRADEMARK OFFICE

Commissioner for Patents
United States Patent and Trademark Office
P.O. Box 1450
Alexandria, VA 22313-1450
www.uspto.gov

In re Patent No. 6220287
Issue Date: April 24,2001
Application No. 09497776
Filed: February 3,2000
Attorney Docket No. 8190-360

:
:DECISION GRANTING PETITION
:UNDER 37 CFR 1.378(c)
:

This is a decision on the electronic petition, filed December 21,2009 ,under 37 CFR 1.378(c) to accept the unintentionally delayed payment of the 7.5 year maintenance fee for the above-identified patent.

The petition is **GRANTED**.

The maintenance fee is accepted, and the above-identified patent reinstated as of December 21,2009 . This decision also constitutes notice that the fee has been accepted. An electronic copy of the petition and this decision has been created as an entry in the Image File Wrapper. Nevertheless, petitioner should print and retain an independent copy.

Telephone inquiries related to this electronic decision should be directed to the Electronic Business Center at 1-866-217-9197.

PTO/SB/66 (03-09)
Approved for use through 03/31/2012. OMB 0651-0016
U.S. Patent and Trademark Office: U.S. DEPARTMENT OF COMMERCE
Under the Paperwork Reduction Act of 1995, no persons are required to respond to a collection of information unless it displays valid OMB control number.

PETITION TO ACCEPT UNINTENTIONALLY DELAYED PAYMENT OF MAINTENANCE FEE IN AN EXPIRED PATENT (37 CFR 1.378(c))

Patent Number	Issue Date (YYYY-MM-DD)	Application Number	Filing Date (YYYY-MM-DD)	Docket Number (if applicable)
6220287	2001-04-24	09497776	2000-02-03	99-036

CAUTION: Maintenance fee (and surcharge, if any) payment must correctly identify: (1) the patent number and (2) the application number of the actual U.S. application leading to issuance of that patent to ensure the fee(s) is/are associated with the correct patent. 37 CFR 1.366(c) and (d).

SMALL ENTITY
☐ Patentee claims, or has previously claimed, small entity status. See 37 CFR 1.27.

LOSS OF ENTITLEMENT TO SMALL ENTITY STATUS
☐ Patentee is no longer entitled to small entity status. See 37 CFR 1.27(g)

NOT Small Entity		Small Entity	
Fee	Code	Fee	Code
○ 3 ½ year	(1551)	○ 3 ½ year	(2551)
◉ 7 ½ year	(1552)	○ 7 ½ year	(2552)
○ 11 ½ year	(1553)	○ 11 ½ year	(2553)

SURCHARGE
The surcharge required by 37 CFR 1.20(i)(2) (Fee Code 1558) must be paid as a condition of accepting unintentionally delayed payment of the maintenance fee.

MAINTENANCE FEE (37 CFR 1.20(e)-(g))
The appropriate maintenance fee must be submitted with this petition.

STATEMENT
THE UNDERSIGNED CERTIFIES THAT THE DELAY IN PAYMENT OF THE MAINTENANCE FEE TO THIS PATENT WAS UNINTENTIONAL

PETITIONER(S) REQUEST THAT THE DELAYED PAYMENT OF THE MAINTENANCE FEE BE ACCEPTED AND THE PATENT REINSTATED

THIS PORTION MUST BE COMPLETED BY THE SIGNATORY OR SIGNATORIES

37 CFR 1.378(d) states: "Any petition under this section must be signed by an attorney or agent registered to practice before the Patent and Trademark Office, or by the patentee, the assignee, or other party in interest."

I certify, in accordance with 37 CFR 1.4(d)(4) that I am

◉ An attorney or agent registered to practice before the Patent and Trademark Office

○ A sole patentee

○ A joint patentee; I certify that I am authorized to sign this submission on behalf of all the other patentees.

○ A joint patentee; all of whom are signing this e-petition

○ The assignee of record of the entire interest

Patent Practitioner			
A signature of the applicant or representative is required in accordance with 37 CFR 1.33 and 10.18. Please see 37 CFR 1.4(d) for the form of the signature			
Signature	/Mark D. Elchuk/	Date (YYYY-MM-DD)	2009-12-21
Name	Mark D. Elchuk	Registration Number	33686

This collection of information is required by 37 CFR 1.378(c). The information is required to obtain or retain a benefit by the public which is to file (and by the USPTO to process) an application. Confidentiality is governed by 35 U.S.C. 122 and 37 CFR 1.11 and 1.14. This collection is estimated to take 1 hour to complete, including gathering, preparing, and submitting the completed application form to the USPTO. Time will vary depending upon the individual case. Any comments on the amount of time you require to complete this form and/ or suggestions for reducing this burden, should be sent to the Chief Information Officer, U.S. Patent and Trademark Office, U.S. Department of Commerce, P.O. Box 1450, Alexandria, VA 22313-1450. DO NOT SEND FEES OR COMPLETED FORMS TO THIS ADDRESS. **This form can only be used when in conjunction with EFS-Web. If this form is mailed to the USPTO, it may cause delays in reinstating the patent.**

Privacy Act Statement

The Privacy Act of 1974 (P.L. 93-579) requires that you be given certain information in connection with your submission of the attached form related to a patent application or patent. Accordingly, pursuant to the requirements of the Act, please be advised that: (1) the general authority for the collection of this information is 35 U.S.C. 2(b)(2); (2) furnishing of the information solicited is voluntary; and (3) the principal purpose for which the information is used by the U.S. Patent and Trademark Office is to process and/or examine your submission related to a patent application or patent. If you do not furnish the requested information, the U.S. Patent and Trademark Office may not be able to process and/or examine your submission, which may result in termination of proceedings or abandonment of the application or expiration of the patent.

The information provided by you in this form will be subject to the following routine uses:

1. The information on this form will be treated confidentially to the extent allowed under the Freedom of Information Act (5 U.S.C. 552) and the Privacy Act (5 U.S.C. 552a). Records from this system of records may be disclosed to the Department of Justice to determine whether the Freedom of Information Act requires disclosure of these records.

2. A record from this system of records may be disclosed, as a routine use, in the course of presenting evidence to a court, magistrate, or administrative tribunal, including disclosures to opposing counsel in the course of settlement negotiations.

3. A record in this system of records may be disclosed, as a routine use, to a Member of Congress submitting a request involving an individual, to whom the record pertains, when the individual has requested assistance from the Member with respect to the subject matter of the record.

4. A record in this system of records may be disclosed, as a routine use, to a contractor of the Agency having need for the information in order to perform a contract. Recipients of information shall be required to comply with the requirements of the Privacy Act of 1974, as amended, pursuant to 5 U.S.C. 552a(m).

5. A record related to an International Application filed under the Patent Cooperation Treaty in this system of records may be disclosed, as a routine use, to the International Bureau of the World Intellectual Property Organization, pursuant to the Patent Cooperation Treaty.

6. A record in this system of records may be disclosed, as a routine use, to another federal agency for purposes of National Security review (35 U.S.C. 181) and for review pursuant to the Atomic Energy Act (42 U.S.C. 218(c)).

7. A record from this system of records may be disclosed, as a routine use, to the Administrator, General Services, or his/her designee, during an inspection of records conducted by GSA as part of that agency's responsibility to recommend improvements in records management practices and programs, under authority of 44 U.S.C. 2904 and 2906. Such disclosure shall be made in accordance with the GSA regulations governing inspection of records for this purpose, and any other relevant (i.e., GSA or Commerce) directive. Such disclosure shall not be used to make determinations about individuals.

8. A record from this system of records may be disclosed, as a routine use, to the public after either publication of the application pursuant to 35 U.S.C. 122(b) or issuance of a patent pursuant to 35 U.S.C. 151. Further, a record may be disclosed, subject to the limitations of 37 CFR 1.14, as a routine use, to the public if the record was filed in an application which became abandoned or in which the proceedings were terminated and which application is referenced by either a published application, an application open to public inspections or an issued patent.

9. A record from this system of records may be disclosed, as a routine use, to a Federal, State, or local law enforcement agency, if the USPTO becomes aware of a violation or potential violation of law or regulation.

UNITED STATES DEPARTMENT OF COMMERCE
Patent and Trademark Office
ASSISTANT SECRETARY AND COMMISSIONER OF
PATENTS AND TRADEMARKS
Washington, D.C. 20231

Paper No. 31

JC530 U.S. PTO
09/497822
02/03/00

COPY MAILED
JUN 24 1997
OFFICE OF PETITIONS
A/C PATENTS

KENNETH D. SIBLEY
BELL, SELTZER, PARK & GIBSON, P.A.
POST OFFICE DRAWER 34009
CHARLOTTE, NORTH CAROLINA 28234

BELL, SELTZER, PARK & GIBSON, P.A.
JUN 30 1997
RECEIVED BY:

In re Application of
Frank S. French et al.
Application No. 07/182,646
Filed: 4/15/88
Attorney Docket No. 5470-130

ON PETITION

This is a decision on the renewed petition under 37 CFR 1.137(a), filed March 14, 1997, to revive the above-identified application.[1]

The petition is granted.

The Terminal Disclaimer filed on May 20, 1996 has been accepted. The period disclaimed is seventy four (74) months, which is equivalent to the period of abandonment.

Any continuing application filed from this application must contain a copy of this decision and a copy of the Terminal Disclaimer. The copies must be filed with a cover letter requesting the terminal disclaimer be recorded on the continuing application.

The file is being forwarded to Examining Group 1800 for consideration of the response filed May 22, 1996.

Telephone inquiries related to this decision should be directed to Rob Nappi at the Office of Petitions at (703) 305-9282.

Brian Hearn, for

Abraham Hershkovitz
Director, Office of Petitions
Office of the Deputy Assistant Commissioner
for Patent Policy and Projects

---

[1] The petition is accompanied by a copy of an itemized postcard receipt date-stamped December 5, 1996, which is accepted as *prima facie* evidence that the original petition was received at the PTO on that date, and subsequently misplaced.

UNITED STATES PATENT AND TRADEMARK OFFICE

Commissioner for Patents
United States Patent and Trademark Office
P.O. Box 1450
Alexandria, VA 22313-1450
www.uspto.gov

MYERS BIGEL SIBLEY & SAJOVEC
PO BOX 37428
RALEIGH NORTH CAROLINA 27627

COPY MAILED

MAY 1 2 2004

OFFICE OF PETITIONS

In re Application of	:	
French et al.	:	
Application No. 09/497,822	:	DECISION ON PETITION
Filed: February 3, 2000	:	
Attorney Docket No. 5470-130DIV	:	

This is in response to the communication filed October 14, 2003, entitled "Submission of Decision on the Renewed Petition under 37 CFR 1.137(a)", which is being treated as a petition under 37 CFR 1.183 for waiver of 37 CFR 1.137(d).

The petition is granted.

Applicants note that a favorable decision mailed June 24, 1997, on the petition filed under 37 CF 1.137(a) in parent application No. 07/182,646 required *inter alia*, that a copy of the decision and the terminal disclaimer filed with the petition be filed in any continuing application, and further, that , applicants request that the terminal disclaimer be recorded against the continuing application. While applicants have compliantly filed herein a copy of the decision and the terminal disclaimer in this continuing application, applicants assert that, in light of the rules promulgated subsequent to the decision, it is no longer required or necessary that the terminal disclaimer be recorded against this application.

The rule change effective December 1, 1997, nevertheless required in 37 CFR 1.137(c) (now (d)) that "[t]he terminal disclaimer must also apply to any patent granted on any continuing application entitled under 35 U.S.C. 120 to the benefit of the filing date of the application for which revival is sought." As noted in MPEP 711.03(c)III(G), the terminal disclaimer would only be excused if the parent application had been revived strictly for continuity with this application; however as the parent application was revived in 1997 and this application was not filed until 2000, such is not the case. It follows that, as explained in MPEP 711.03(c)III(G), applicants are , in essence seeking relief by waiver of the rules of the necessity of recording the terminal disclaimer against this application. It is noted that the instant application claims § 120 benefit of the parent application which was filed April 15, 1988, and further, some 74 months of term were disclaimed in the parent case. Thus, the longest term the instant application can enjoy as a patent expires April 15, 2008; if the same 74 months were also disclaimed herein no term would be available to any forthcoming patent. It is agreed that justice would be served by waiver of the requirement that the terminal disclaimer be recorded against the instant continuing application. Since the disclaimed period of 74 months will not be accepted herein, then petitioners have disclaimed the period that would extend beyond 20 years from April 18, 1988, the earliest date claimed under 35 U.S.C. §§ 120, 121, or 365(c). See MPEP 711.03(c)III(G).

The $130 petition fee has been charged

Any inquiries concerning this decision may be directed to the undersigned at (703) 305-8680.

Brian Hearn

Brian Hearn
Petitions Examiner
Office of Petitions
Office of the Deputy Commissioner
for Patent Examination Policy

OIPE
OCT 14 2003
PATENT & TRADEMARK OFFICE

UNITED STATES PARTMENT OF COMMERCE
Patent and Trademark Office
ASSISTANT SECRETARY AND COMMISSIONER OF PATENTS AND TRADEMARKS
Washington, D.C. 20231

Paper No. 31

KENNETH D. SIBLEY
BELL, SELTZER, PARK & GIBSON, P.A.
POST OFFICE DRAWER 34009
CHARLOTTE, NORTH CAROLINA 28234

COPY MAILED
JUN 24 1997
OFFICE OF PETITIONS
A/C PATENTS
BELL, SELTZER, PARK & GIBSON, P.A.
JUN 30 1997
RECEIVED BY:

In re Application of :
Frank S. French et al. :
Application No. 07/182,646 :
Filed: 4/15/88 :
Attorney Docket No. 5470-130 :

ON PETITION

This is a decision on the renewed petition under 37 CFR 1.137(a), filed March 14, 1997, to revive the above-identified application.[1]

The petition is granted.

The Terminal Disclaimer filed on May 20, 1996 has been accepted. The period disclaimed is seventy four (74) months, which is equivalent to the period of abandonment.

Any continuing application filed from this application must contain a copy of this decision and a copy of the Terminal Disclaimer. The copies must be filed with a cover letter requesting the terminal disclaimer be recorded on the continuing application.

The file is being forwarded to Examining Group 1800 for consideration of the response filed May 22, 1996.

Telephone inquiries related to this decision should be directed to Rob Nappi at the Office of Petitions at (703) 305-9282.

Brian Hearn, for
Abraham Hershkovitz
Director, Office of Petitions
Office of the Deputy Assistant Commissioner
for Patent Policy and Projects

---

[1] The petition is accompanied by a copy of an itemized postcard receipt date-stamped December 5, 1996, which is accepted as *prima facie* evidence that the original petition was received at the PTO on that date, and subsequently misplaced.

RECEIVED
OCT 17 2003
OFFICE OF PETITIONS

SPE RESPONSE FOR CERTIFICATE OF CORRECTION

Paper No.: —

DATE : 11/5/07

TO SPE OF : ART UNIT 1634

SUBJECT : Request for Certificate of Correction for Appl. No.: 9/497943 Patent No: 7135284 B1

A response is requested with respect to a request for a certificate of correction.

With respect to the change(s) requested to correct Office and/or Applicant's errors, should the patent read as shown in the certificate of correction attached herewith or the COCIN document(s), in IFW images for the above-identified patented application? No new matter should be introduced, nor should the scope or meaning of the claims be changed.

If the response is for an IFW, within 7 days, please complete and forward the response, to the employee (named below) via scanning into application images, using document code **COCX**.

If the response is for a paper file wrapper, please complete the response and forward the response with the paper file wrapper, to the employee (named below), within 7 days, to:

Certificates of Correction Branch (CofC)
South Tower - 9A22
Palm Location 7580

VIRGINIA TOLBERT
Certificates of Correction Branch
703-308-9390 ext. 113

Thank You For Your Assistance

The request for issuing the above-identified correction(s) is hereby:
Note your decision on the appropriate box.

- ☑ **Approved** — All changes apply.
- ☐ **Approved in Part** — Specify below which changes **do not** apply.
- ☐ **Denied** — State the reasons for denial below.

Comments: _____

For 1634

SPE — Art Unit 1638

UNITED STATES PATENT AND TRADEMARK OFFICE

Commissioner for Patents
United States Patent and Trademark Office
P.O. Box 1450
Alexandria, VA 22313-1450
www.uspto.gov

JAMES H. BEUSSE BROWNLEE WOLTER
MORA & MARIE, P.A.
390 N. ORANGE AVE., SUITE 2500
ORLANDA, FL 32801

COPY MAILED

FEB 16 2006

OFFICE OF PETITIONS

In re Application of :
Bradley Paul Barber, et al. :
Application No. 09/497,993 :
Filed: February 4, 2000 :
Attorney Docket No. 2925-0401P :

ON PETITION

This is a decision on the petition under 37 CFR 1.137(b), filed December 19, 2005, to revive the above-identified application.

The petition is **GRANTED.**

The above-identified application became abandoned for failure to reply in a timely manner to the non-final Office action mailed June 16, 2004, which set a shortened statutory period for reply of three (3) months. No extensions of time under the provisions of 37 CFR 1.136(a) were obtained. Accordingly, the application became abandoned on September 17, 2004.

The petition satisfies the requirement of 37 CFR 1.137 (b) in that petitioner has supplied (1) the reply in the form of an Amendment; (2) the petition fee of $1500; and (3) the required statement of unintentional delay have been received. Accordingly, the petition filed December 19, 2005 is accepted as having been unintentionally delayed.

Telephone inquiries concerning this decision should be directed to the undersigned at (571) 272-3229.

The application matter is being referred to Technology Center 3700, Art Unit 3729 for further processing.

Retta Williams

Retta Williams
Petitions Examiner
Office of Petitions

UNITED STATES PATENT TRADEMARK OFFICE

Commissioner for Patents
United States Patent and Trademark Office
Washington, D.C. 20231
www.uspto.gov

Paper No. 23

OBLON SPIVAK MCCLELLAND MAIER & NEUSTADT P C
1755 JEFFERSON DAVIS HIGHWAY
FOURTH FLOOR
ARLINGTON VA 22202

COPY MAILED

JUN 0 4 2002

OFFICE OF PETITIONS

In re Application of :
Ternynck, et al. :
Application No. 09/497,997 : ON PETITION
Filed: February 4, 2000 :
Docket No. 0660-0166-OX-CONT :

This is a decision on the petition under 37 CFR 1.137(b), filed March 11, 2002, to revive the above-identified application.

The petition is **GRANTED**.

The above-identified application became abandoned for failure to timely file a proper reply to the non-final Office action, mailed August 31, 2001, which set a shortened statutory period for reply of three (3) months. An earlier Office action had been mailed on July 31, 2001. However, the Office remailed this action on August 31, 2001 and reset the period for response. On January 31, 2002, petitioner obtained a two month extension of time and filed a Notice of Appeal. However, because the claims had not yet been twice rejected, the Notice of Appeal was not a proper reply. No further extensions of time under the provisions of 37 CFR 1.136(a) were obtained. Accordingly, the above-identified application became abandoned on February 1, 2002. The mailing of the instant decision precedes the mailing of a Notice of Abandonment.

Petitioner has met the requirements to revive the above-identified application, pursuant to 37 CFR 1.137(b). Petitioner submitted the required reply in the form of an amendment, paid the petition fee, and made a statement of unintentional delay. 37 CFR 1.137(b)(3) requires a statement that the entire delay in filing the required reply from the due date for the reply until the filing of a grantable petition pursuant to 37 CFR 1.137(b) was unintentional. The statement contained in the instant petition varies from the language required by 37 CFR 1.137(b)(3). The statement contained in the instant petition is being construed as the statement required by 37 CFR 1.137(b)(3). Petitioner must notify the Office if this is **not** a correct interpretation of the statement contained in the instant petition.

Pursuant to 37 CFR 1.136, an extension of time must be filed prior to the expiration of the maximum period obtainable for reply to avoid abandonment. Accordingly, since the $520 extension of time fee submitted with the petition on March 11, 2002 was subsequent to the maximum period obtainable for reply (February 28, 2002), this fee has been refunded to Deposit Account No. 15-0030.

In addition, since the filing of a Notice of Appeal on January 31, 2002 was improper, the $320 for its filing has been refunded to Deposit Account No. 15-0030.

The application file is being forwarded to Technology Center 1600 for consideration of petitioner's amendment, filed March 11, 2002.

Telephone inquiries regarding this decision should be directed to the undersigned at (703) 305-0272.

Cliff Congo
Petitions Attorney
Office of Petitions
Office of the Deputy Commissioner
for Patent Examination Policy

UNITED STATES PATENT AND TRADEMARK OFFICE

Commissioner for Patents
United States Patent and Trademark Office
P.O. Box 1450
Alexandria, VA 22313-1450
www.uspto.gov

FINNEGAN HENDERSON FARABOW
GARRETT & DUNNER
901 NEW YORK AVENUE NW
WASHINGTON, DC 20001-4413

COPY MAILED
JUN 06 2006
OFFICE OF PETITIONS

In re Patent No. 6,794,579	:	
Issue Date: September 21, 2004	:	
Application No. 09/498,062	:	ON PETITION
Filed: February 4, 2000	:	
Attorney Docket No. 05788.0124	:	

This is a decision on the petition, filed November 4, 2005, which is being treated as a petition under 37 CFR 1.182 requesting issuance of a duplicate Letters Patent for the above-identified application.

The petition is **granted**.

The Publishing Division is directed to issue a duplicate Letters Patent.

Any questions concerning this matter may be directed to the undersigned at (571) 272-3218. Any questions concerning issuance of the duplicate Letters Patent should be directed to Krystal Paige at (703) 305-9250.

A copy of this decision is being forwarded to Publishing Division for issuance of a duplicate Letters Patent.

Frances Hicks
Petitions Examiner
Office of Petitions

cc: Krystal Paige, P/OPPD, ST 8C32 - Fax No. 571-273-9756

UNITED STATES PATENT AND TRADEMARK OFFICE

Commissioner for Patents
United States Patent and Trademark Office
P.O. Box 1450
Alexandria, VA 22313-1450
www.uspto.gov

In re Patent No. 6574614
Issue Date: June 3,2003
Application No. 09498153
Filed: February 4,2000
Attorney Docket No. 6K061-012

:
:DECISION GRANTING PETITION
:UNDER 37 CFR 1.378(c)
:

This is a decision on the electronic petition, filed August 14,2007 ,under 37 CFR 1.378(c) to accept the unintentionally delayed payment of the 3.5 year maintenance fee for the above-identified patent.

The petition is GRANTED.

The maintenance fee is accepted, and the above-identified patent reinstated as of August 14,2007 . This decision also constitutes notice that the fee has been accepted. An electronic copy of the petition and this decision has been created as an entry in an Image File Wrapper. Nevertheless, petitioner should print and retain an independent copy

Telephone inquires related to this electronic decision should be directed to the Electronic Business Center at 1-866-217-9197.

Under the Paperwork Reduction Act of 1995, no persons are required to respond to a collection of information unless it displays valid OMB control number.

PETITION TO ACCEPT UNINTENTIONALLY DELAYED PAYMENT OF MAINTENANCE FEE IN AN EXPIRED PATENT (37 CFR 1.378(c))

Patent Number	Issue Date (YYYY-MM-DD)	Application Number	Filing Date (YYYY-MM-DD)	Docket Number (if applicable)
6574614	2003-06-03	09498153	2000-02-04	21700068-000003

CAUTION: Maintenance fee (and surcharge, if any) payment must correctly identify: (1) the patent number and (2) the application number of the actual U.S. application leading to issuance of that patent to ensure the fee(s) is/are associated with the correct patent. 37 CFR 1.366(c) and (d).

SMALL ENTITY
☒ Patentee claims, or has previously claimed, small entity status. See 37 CFR 1.27.

LOSS OF ENTITLEMENT TO SMALL ENTITY STATUS
☐ Patentee is no longer entitled to small entity status. See 37 CFR 1.27(g)

NOT Small Entity		Small Entity	
Fee	Code	Fee	Code
○ 3 ½ year	(1551)	◉ 3 ½ year	(2551)
○ 7 ½ year	(1552)	○ 7 ½ year	(2552)
○ 11 ½ year	(1553)	○ 11 ½ year	(2553)

SURCHARGE
The surcharge required by 37 CFR 1.20(i)(2) (Fee Code 1558) must be paid as a condition of accepting unintentionally delayed payment of the maintenance fee.

MAINTENANCE FEE (37 CFR 1.20(e)-(g))
The appropriate maintenance fee must be submitted with this petition.

STATEMENT
THE UNDERSIGNED CERTIFIES THAT THE DELAY IN PAYMENT OF THE MAINTENANCE FEE TO THIS PATENT WAS UNINTENTIONAL

PETITIONER(S) REQUEST THAT THE DELAYED PAYMENT OF THE MAINTENANCE FEE BE ACCEPTED AND THE PATENT REINSTATED

THIS PORTION MUST BE COMPLETED BY THE SIGNATORY OR SIGNATORIES

37 CFR 1.378(d) states: "Any petition under this section must be signed by an attorney or agent registered to practice before the Patent and Trademark Office, or by the patentee, the assignee, or other party in interest."

I certify, in accordance with 37 CFR 1.4(d)(4) that I am

◉ An attorney or agent registered to practice before the Patent and Trademark Office

○ A sole patentee

○ A joint patentee; I certify that I am authorized to sign this submission on behalf of all the other patentees.

○ A joint patentee; all of whom are signing this e-petition

○ The assignee of record of the entire interest

Patent Practitioner			
A signature of the applicant or representative is required in accordance with 37 CFR 1.33 and 10.18. Please see 37 CFR 1.4(d) for the form of the signature			
Signature	/carl m davis ii/	Date (YYYY-MM-DD)	2007-08-14
Name	Carl M. Davis Ii	Registration Number	31502

This collection of information is required by 37 CFR 1.378(c). The information is required to obtain or retain a benefit by the public which is to file (and by the USPTO to process) an application. Confidentiality is governed by 35 U.S.C. 122 and 37 CFR 1.11 and 1.14. This collection is estimated to take 1 hour to complete, including gathering, preparing, and submitting the completed application form to the USPTO. Time will vary depending upon the individual case. Any comments on the amount of time you require to complete this form and/ or suggestions for reducing this burden, should be sent to the Chief Information Officer, U.S. Patent and Trademark Office, U.S. Department of Commerce, P.O. Box 1450, Alexandria, VA 22313-1450. DO NOT SEND FEES OR COMPLETED FORMS TO THIS ADDRESS. **This form can only be used when in conjunction with EFS-Web. If this form is mailed to the USPTO, it may cause delays in reinstating the patent.**

Privacy Act Statement

The Privacy Act of 1974 (P.L. 93-579) requires that you be given certain information in connection with your submission of the attached form related to a patent application or patent. Accordingly, pursuant to the requirements of the Act, please be advised that: (1) the general authority for the collection of this information is 35 U.S.C. 2(b)(2); (2) furnishing of the information solicited is voluntary; and (3) the principal purpose for which the information is used by the U.S. Patent and Trademark Office is to process and/or examine your submission related to a patent application or patent. If you do not furnish the requested information, the U.S. Patent and Trademark Office may not be able to process and/or examine your submission, which may result in termination of proceedings or abandonment of the application or expiration of the patent.

The information provided by you in this form will be subject to the following routine uses:

1. The information on this form will be treated confidentially to the extent allowed under the Freedom of Information Act (5 U.S.C. 552) and the Privacy Act (5 U.S.C. 552a). Records from this system of records may be disclosed to the Department of Justice to determine whether the Freedom of Information Act requires disclosure of these record s.

2. A record from this system of records may be disclosed, as a routine use, in the course of presenting evidence to a court, magistrate, or administrative tribunal, including disclosures to opposing counsel in the course of settlement negotiations.

3. A record in this system of records may be disclosed, as a routine use, to a Member of Congress submitting a request involving an individual, to whom the record pertains, when the individual has requested assistance from the Member with respect to the subject matter of the record.

4. A record in this system of records may be disclosed, as a routine use, to a contractor of the Agency having need for the information in order to perform a contract. Recipients of information shall be required to comply with the requirements of the Privacy Act of 1974, as amended, pursuant to 5 U.S.C. 552a(m).

5. A record related to an International Application filed under the Patent Cooperation Treaty in this system of records may be disclosed, as a routine use, to the International Bureau of the World Intellectual Property Organization, pursuant to the Patent Cooperation Treaty.

6. A record in this system of records may be disclosed, as a routine use, to another federal agency for purposes of National Security review (35 U.S.C. 181) and for review pursuant to the Atomic Energy Act (42 U.S.C. 218(c)).

7. A record from this system of records may be disclosed, as a routine use, to the Administrator, General Services, or his/her designee, during an inspection of records conducted by GSA as part of that agency's responsibility to recommend improvements in records management practices and programs, under authority of 44 U.S.C. 2904 and 2906. Such disclosure shall be made in accordance with the GSA regulations governing inspection of records for this purpose, and any other relevant (i.e., GSA or Commerce) directive. Such disclosure shall not be used to make determinations about individuals.

8. A record from this system of records may be disclosed, as a routine use, to the public after either publication of the application pursuant to 35 U.S.C. 122(b) or issuance of a patent pursuant to 35 U.S.C. 151. Further, a record may be disclosed, subject to the limitations of 37 CFR 1.14, as a routine use, to the public if the record was filed in an application which became abandoned or in which the proceedings were terminated and which application is referenced by either a published application, an application open to public inspections or an issued patent.

9. A record from this system of records may be disclosed, as a routine use, to a Federal, State, or local law enforcement agency, if the USPTO becomes aware of a violation or potential violation of law or regulation.

UNITED STATES PATENT AND TRADEMARK OFFICE

Commissioner for Patents
United States Patent and Trademark Office
Washington, D.C. 20231
www.uspto.gov

Paper No. 11

COPY MAILED

Pillsbury Winthrop
Intellectual Property Group
11682 El Camino Real, Suite 200
San Diego, CA 92130-2092

In re Application of	:	
Vlasuk, George P. et al.	:	
Application No. 09/498,272	:	ON PETITION
Filed: February 4, 2000	:	
Attorney Docket No 018813	:	

This is a decision on the petition under 37 CFR 1.137(b), filed December 31, 2002, to revive the above-identified application.

The petition is **GRANTED**.

The above-identified application became abandoned for failure to reply in a timely manner to the non-final Office action mailed September 28, 2001, which set a period for reply of one (1) month. No extensions of time under the provisions of 37 CFR 1.136(a) were obtained. Accordingly, the above-identified application became abandoned on October 29, 2001.

The above-identified application is being revived solely for purposes of continuity with a continued prosecution application (CPA) filed on December 31, 2002.

Telephone inquiries concerning this decision should be directed to Latrice Bond at (703) 308-6911.

The application file is being forwarded to Technology Center AU 1652 for processing the Continued Prosecution Application filed with the instant petition.

Latrice Bond

Latrice Bond
Paralegal Specialist
Office of Petitions
Office of the Deputy Commissioner
For Patent Examination Policy

UNITED STATES PATENT AND TRADEMARK OFFICE

Commissioner for Patents
United States Patent and Trademark Office
P.O. Box 1450
Alexandria, VA 22313-1450
www.uspto.gov

Paper No. 22

Oblon Spivak McClelland
Maier & Neustadt
1940 Duke Street
Alexandria, VA 22314

COPY MAILED

FEB 0 6 2004

OFFICE OF PETITIONS

In re Application of	:	
Yves Naoumenko et al.	:	
Application No. 09/498,363	:	ON PETITION
Filed: February 4, 2000	:	
Attorney Docket No. 1247-0851-6V	:	

This is a decision on the petition under 37 CFR 1.137(b), filed January 23, 2004, to revive the above-identified application.

The petition is granted.

The above-identified application became abandoned for failure to reply within the meaning of 37 CFR 1.113, to the final Office action mailed March 7, 2003, which set a shortened statutory period for reply of three (3) months. No extensions of time under the provisions of 37 CFR 1.136(a) were obtained. Accordingly, the above-identified application became abandoned on June 8, 2003.

The application file is being forwarded to Technology Center AU 1774, for processing the Request for Continued Examination under 37 CFR 1.114 filed with the instant petition.

Telephone inquiries concerning this decision should be directed to Latrice Bond at (703) 308-6911.

Latrice Bond

Latrice Bond
Petitions Examiner
Office of Petitions
Office of the Deputy Commissioner
for Patent Examination Policy

UNITED STATES PATENT AND TRADEMARK OFFICE

Commissioner for Patents
United States Patent and Trademark Office
P.O. Box 1450
Alexandria, VA 22313-1450
www.uspto.gov

wk

Mailed: 8-30-07

In re application of	:	
Colin et al.	:	DECISION ON
Serial No. 09/498,363	:	PETITION
Filed: February 4, 2000	:	
For: Laminated Glazing With High Crash Test Resistance	:	

This is a decision on PETITION C.F.R. 1.181 to require the Examiner to act on the above-referenced application .

DECISION

The petition is **DISMISSED.**

The Examiner issued a non-final office action on June 6, 2007.

Jacqueline M. Stone wk

Jacqueline M. Stone, Director
Technology Center 1700
Chemical and Materials Engineering

Gregory J. Maier
OBLON, SPIVAK, MCCLELLAND, MAIER & NEUSTADT, P.C.
1940 DUKE STREET
ALEXANDRIA VA 22314

UNITED STATES PATENT AND TRADEMARK OFFICE

Commissioner for Patents
United States Patent and Trademark Office
P.O. Box 1450
Alexandria, VA 22313-1450
www.uspto.gov

OBLON, SPIVAK, MCCLELLAND MAIER
& NEUSTADT, P.C.
1940 DUKE STREET
ALEXANDRIA, VA 22314

COPY MAILED

JUN 24 2008

In re Application of :
Yves NAOUMENKO et al. :
Application No. 09/498,363 : DECISION ON PETITION
Filed: February 04, 2000 :
Attorney Docket No. 146493US6 :

This is a decision on the petition under the unintentional provisions of 37 CFR 1.137(b), filed March 11, 2008, to revive the above-identified application.

The petition is **GRANTED.**

The application became abandoned for failure to reply in a timely manner to the non-final Office action mailed, June 06, 2007, which set a shortened statutory period for reply of three (3) months. No extensions of time under the provisions of 37 CFR 1.136(a) were obtained. Accordingly, the application became abandoned on September 07, 2007.

The petition satisfies the conditions for revival pursuant to the provisions of 37 CFR 1.137(b) in that (1) the reply in the form of Notice of Appeal and Appeal Brief; (2) the petition fee of $1,540.00; and (3) the required statement of unintentional delay have been received. Accordingly, the reply to the non-final Office action of June 06, 2007 is accepted as having been unintentionally delayed.

An extension of time under 37 CFR 1.136 must be filed prior to the expiration of the maximum extendable period for reply. *See* In re Application of S., 8 USPQ2d 1630, 1631 (Comm'r Pats. 1988). Since the $1,050.00 extension of time fee submitted with the petition on March 11, 2008 was subsequent to the maximum extendable period for reply, this fee is unnecessary and will be credited to petitioner's deposit account.

Telephone inquiries concerning this decision should be directed to the undersigned at (571) 272-4231.

The application file is being referred to Technology Center AU 1794 for appropriate action on the concurrently filed amendment.

Michelle R. Eason

Michelle R. Eason
Paralegal Specialist
Office of Petitions

UNITED STATES PATENT AND TRADEMARK OFFICE

UNITED STATES DEPARTMENT OF COMMERCE
United States Patent and Trademark Office
Address: COMMISSIONER FOR PATENTS
P.O. Box 1450
Alexandria, Virginia 22313-1450
www.uspto.gov

APPLICATION NO.	FILING DATE	FIRST NAMED INVENTOR	ATTORNEY DOCKET NO.	CONFIRMATION NO.
09/498,412	02/04/2000	Heinz Zorn	63870-9001-00	8789

23409 7590 03/20/2008
MICHAEL BEST & FRIEDRICH LLP
100 E WISCONSIN AVENUE
Suite 3300
MILWAUKEE, WI 53202

EXAMINER
HOANG, TU BA

ART UNIT	PAPER NUMBER
3742	

MAIL DATE	DELIVERY MODE
03/20/2008	PAPER

Please find below and/or attached an Office communication concerning this application or proceeding.

The time period for reply, if any, is set in the attached communication.

UNITED STATES PATENT AND TRADEMARK OFFICE

COMMISSIONER FOR PATENTS
UNITED STATES PATENT AND TRADEMARK OFFICE
P.O. BOX 1450
ALEXANDRIA, VA 22313-1450
www.uspto.gov

In re Patent No. ZORN ET AL.	:	
Issue Date: April 17, 2001	:	**DECISION GRANTING**
Appl No.: 09/498,412	:	**PETITION**
Filed: February 04, 2000	:	*37 CFR 1.324*
For: Multiple Wire Cord and Multiple Segment Heating Element for Footwear / Outerwear Heater	:	

This is a decision on the petition filed February 28, 2005 to correct inventorship under 37 CFR 1.324.

The petition is granted.

The patented file is being forwarded to Certificate of Corrections Branch for issuance of a certificate naming only the actual inventor or inventors.

Tu B. Hoang
SPE, Art Unit 3742
Technology Center 3700

MICHAEL BEST & FRIEDRICH LLP
100 E WISCONSIN AVENUE
Suite 3300
MILWAUKEE, WI 53202

PTO/SB/66 (03-09)
Approved for use through 03/31/2012. OMB 0651-0016
U.S. Patent and Trademark Office: U.S. DEPARTMENT OF COMMERCE
Under the Paperwork Reduction Act of 1995, no persons are required to respond to a collection of information unless it displays valid OMB control number.

PETITION TO ACCEPT UNINTENTIONALLY DELAYED PAYMENT OF MAINTENANCE FEE IN AN EXPIRED PATENT (37 CFR 1.378(c))

Patent Number	Issue Date (YYYY-MM-DD)	Application Number	Filing Date (YYYY-MM-DD)	Docket Number (if applicable)
6,724,407	2004-04-20	09/498,632	2000-02-07	

CAUTION: Maintenance fee (and surcharge, if any) payment must correctly identify: (1) the patent number and (2) the application number of the actual U.S. application leading to issuance of that patent to ensure the fee(s) is/are associated with the correct patent. 37 CFR 1.366(c) and (d).

SMALL ENTITY
☒ Patentee claims, or has previously claimed, small entity status. See 37 CFR 1.27.

LOSS OF ENTITLEMENT TO SMALL ENTITY STATUS
☐ Patentee is no longer entitled to small entity status. See 37 CFR 1.27(g)

NOT Small Entity		Small Entity	
Fee	Code	Fee	Code
○ 3 ½ year	(1551)	◉ 3 ½ year	(2551)
○ 7 ½ year	(1552)	○ 7 ½ year	(2552)
○ 11 ½ year	(1553)	○ 11 ½ year	(2553)

SURCHARGE
The surcharge required by 37 CFR 1.20(i)(2) (Fee Code 1558) must be paid as a condition of accepting unintentionally delayed payment of the maintenance fee.

MAINTENANCE FEE (37 CFR 1.20(e)-(g))
The appropriate maintenance fee must be submitted with this petition.

STATEMENT
THE UNDERSIGNED CERTIFIES THAT THE DELAY IN PAYMENT OF THE MAINTENANCE FEE TO THIS PATENT WAS UNINTENTIONAL

PETITIONER(S) REQUEST THAT THE DELAYED PAYMENT OF THE MAINTENANCE FEE BE ACCEPTED AND THE PATENT REINSTATED

THIS PORTION MUST BE COMPLETED BY THE SIGNATORY OR SIGNATORIES

37 CFR 1.378(d) states: "Any petition under this section must be signed by an attorney or agent registered to practice before the Patent and Trademark Office, or by the patentee, the assignee, or other party in interest."

I certify, in accordance with 37 CFR 1.4(d)(4) that I am

◉ An attorney or agent registered to practice before the Patent and Trademark Office

○ A sole patentee

○ A joint patentee; I certify that I am authorized to sign this submission on behalf of all the other patentees.

○ A joint patentee; all of whom are signing this e-petition

○ The assignee of record of the entire interest

Patent Practitioner			
A signature of the applicant or representative is required in accordance with 37 CFR 1.33 and 10.18. Please see 37 CFR 1.4(d) for the form of the signature			
Signature	/ joe zheng /	Date (YYYY-MM-DD)	2010-04-20
Name	Joe Zheng	Registration Number	39450

This collection of information is required by 37 CFR 1.378(c). The information is required to obtain or retain a benefit by the public which is to file (and by the USPTO to process) an application. Confidentiality is governed by 35 U.S.C. 122 and 37 CFR 1.11 and 1.14. This collection is estimated to take 1 hour to complete, including gathering, preparing, and submitting the completed application form to the USPTO. Time will vary depending upon the individual case. Any comments on the amount of time you require to complete this form and/ or suggestions for reducing this burden, should be sent to the Chief Information Officer, U.S. Patent and Trademark Office, U.S. Department of Commerce, P.O. Box 1450, Alexandria, VA 22313-1450. DO NOT SEND FEES OR COMPLETED FORMS TO THIS ADDRESS. **This form can only be used when in conjunction with EFS-Web. If this form is mailed to the USPTO, it may cause delays in reinstating the patent.**

Privacy Act Statement

The Privacy Act of 1974 (P.L. 93-579) requires that you be given certain information in connection with your submission of the attached form related to a patent application or patent. Accordingly, pursuant to the requirements of the Act, please be advised that: (1) the general authority for the collection of this information is 35 U.S.C. 2(b)(2); (2) furnishing of the information solicited is voluntary; and (3) the principal purpose for which the information is used by the U.S. Patent and Trademark Office is to process and/or examine your submission related to a patent application or patent. If you do not furnish the requested information, the U.S. Patent and Trademark Office may not be able to process and/or examine your submission, which may result in termination of proceedings or abandonment of the application or expiration of the patent.

The information provided by you in this form will be subject to the following routine uses:

1. The information on this form will be treated confidentially to the extent allowed under the Freedom of Information Act (5 U.S.C. 552) and the Privacy Act (5 U.S.C. 552a). Records from this system of records may be disclosed to the Department of Justice to determine whether the Freedom of Information Act requires disclosure of these records.

2. A record from this system of records may be disclosed, as a routine use, in the course of presenting evidence to a court, magistrate, or administrative tribunal, including disclosures to opposing counsel in the course of settlement negotiations.

3. A record in this system of records may be disclosed, as a routine use, to a Member of Congress submitting a request involving an individual, to whom the record pertains, when the individual has requested assistance from the Member with respect to the subject matter of the record.

4. A record in this system of records may be disclosed, as a routine use, to a contractor of the Agency having need for the information in order to perform a contract. Recipients of information shall be required to comply with the requirements of the Privacy Act of 1974, as amended, pursuant to 5 U.S.C. 552a(m).

5. A record related to an International Application filed under the Patent Cooperation Treaty in this system of records may be disclosed, as a routine use, to the International Bureau of the World Intellectual Property Organization, pursuant to the Patent Cooperation Treaty.

6. A record in this system of records may be disclosed, as a routine use, to another federal agency for purposes of National Security review (35 U.S.C. 181) and for review pursuant to the Atomic Energy Act (42 U.S.C. 218(c)).

7. A record from this system of records may be disclosed, as a routine use, to the Administrator, General Services, or his/her designee, during an inspection of records conducted by GSA as part of that agency's responsibility to recommend improvements in records management practices and programs, under authority of 44 U.S.C. 2904 and 2906. Such disclosure shall be made in accordance with the GSA regulations governing inspection of records for this purpose, and any other relevant (i.e., GSA or Commerce) directive. Such disclosure shall not be used to make determinations about individuals.

8. A record from this system of records may be disclosed, as a routine use, to the public after either publication of the application pursuant to 35 U.S.C. 122(b) or issuance of a patent pursuant to 35 U.S.C. 151. Further, a record may be disclosed, subject to the limitations of 37 CFR 1.14, as a routine use, to the public if the record was filed in an application which became abandoned or in which the proceedings were terminated and which application is referenced by either a published application, an application open to public inspections or an issued patent.

9. A record from this system of records may be disclosed, as a routine use, to a Federal, State, or local law enforcement agency, if the USPTO becomes aware of a violation or potential violation of law or regulation.

UNITED STATES PATENT AND TRADEMARK OFFICE

Commissioner for Patents
United States Patent and Trademark Office
P.O. Box 1450
Alexandria, VA 22313-1450
www.uspto.gov

In re Patent No. 6724407
Issue Date: April 20,2004
Application No. 09498632
Filed: February 7,2000
Attorney Docket No. MUSE-300

:

:DECISION GRANTING PETITION
:UNDER 37 CFR 1.378(c)

:

This is a decision on the electronic petition, filed April 20,2010 ,under 37 CFR 1.378(c) to accept the unintentionally delayed payment of the 3.5 year maintenance fee for the above-identified patent.

The petition is **GRANTED**.

The maintenance fee is accepted, and the above-identified patent reinstated as of April 20,2010 .
This decision also constitutes notice that the fee has been accepted. An electronic copy of the petition and this decision has been created as an entry in the Image File Wrapper. Nevertheless, petitioner should print and retain an independent copy.

Telephone inquiries related to this electronic decision should be directed to the Electronic Business Center at 1-866-217-9197.

UNITED STATES PATENT AND TRADEMARK OFFICE

Commissioner for Patents
United States Patent and Trademark Office
PO Box 1450
Arlington, VA 22313-1450
www.uspto.gov

Paper No. 19

COPY MAILED

JUL 0 8 2003

OFFICE OF PETITIONS

Alza Corporation
1900 Charleston Road
PO Box 7210, M10-3
Mountain View, CA 94039-7210

In re Application of	:	
Uster, Paul S. et al.	:	
Application No. 09/498704	:	ON PETITION
Filed: February 7, 2000	:	
Attorney Docket No. 5325-0162.30	:	

This is a decision on the petition under 37 CFR 1.137(b), filed June 25, 2003, to revive the above-identified application.

The petition is **GRANTED**.

The above-identified application became abandoned for failure to reply in a timely manner within the meaning of 37 CFR 1.113 in reply to the final Office action mailed April 1, 2002. Accordingly, the application became abandoned on October 2, 2002.

The application file is being forwarded to Technology Center AU 1615 for processing the Request for Continued Examination under 37 CFR 1.114 filed October 31, 2002.

Telephone inquiries concerning this decision should be directed to Latrice Bond at (703) 308-6911.

Latrice Bond

Latrice Bond
Paralegal Specialist
Office of Petitions
Office of the Deputy Commissioner
for Patent Examination Policy

UNITED STATES PATENT AND TRADEMARK OFFICE

Commissioner for Patents
United States Patent and Trademark Office
P.O. Box 1450
Alexandria, VA 22313-1450
www.uspto.gov

EXXONMOBIL RESEARCH AND ENGINEERING COMPANY
P.O. BOX 900
1545 ROUTE 22 EAST
ANNANDALE, NJ 08801-0900

COPY MAILED

JUN 2 2 2005

OFFICE OF PETITIONS

In re Application of	:	
David J. Baillargeon, et al.	:	
Application No. 09/498,793	:	ON PETITION
Filed: February 4, 2000	:	
Attorney Docket No. 10213-1	:	

This is a decision on the petition under 37 CFR 1.137(b), filed September 3, 2004, to revive the above-identified application.

The petition is **GRANTED.**

The petition satisfies the conditions for revival pursuant to the provisions of 37 CFR 1.137 (b) in that (1) the reply in the form of a Request for Continued Examination (RCE); (2) the petition fee; (3) the required statement of unintentional delay have been received. Accordingly, the petition filed September 3, 2004 is accepted as having been unintentionally delayed.

Telephone inquiries concerning this decision should be directed to the undersigned at (571) 272-3229.

The application file is being forwarded to Technology Center 1700, Art Unit 1764 for processing the Request for Continued Examination under 37 CFR 1.114 filed with the instant petition.

Retta Williams

Retta Williams
Petitions Examiner
Office of Petitions
Office of the Deputy Commissioner
for Patent Examination Policy

UNITED STATES PATENT AND TRADEMARK OFFICE

Commissioner for Patents
United States Patent and Trademark Office
Washington, D.C. 20231
www.uspto.gov

Paper No. 7

COPY MAILED

MAY 1 5 2003

OFFICE OF PETITIONS

Kent N Stone
NASA Glenn Research Center
Mail Stop 500 118
21000 Brookpark Road
Cleveland, OH 44135

In re Application of :
Duffy et al. :
Application No. 09/498,794 :
Filed: February 1, 2000 :
Attorney Docket Number: LEW16,833-1:

DECISION DISMISSING PETITION

This is a decision on the Petition to Accept Missing Item in New Application under 37 CFR 1.182, which is being treated as a petition to accord a filing date February 1, 2000 to page 7 of the specification.

The petition is dismissed.

The application was filed on February 1, 2000. However, on April 4, 2000, the Office mailed a "Notice of Omitted Item(s) in a Nonprovisional Application" (hereinafter "Notice"), indicating, that the application had been accorded a filing date of February 1, 2000, and advising applicant that page 7 of the specification appeared to have been omitted.

In response, Petitioner filed the instant petition wherein Petitioner avers that page 7 of the specification was filed with the application. This contention is supported by the Declaration Kent N. Stone, and a patent application mailing card which putatively indicate that 29 pages of specification were filed on February 1, 2000. However, the application file does not contain a copy of a date stamped filing receipt[1].

Upon review of the record, 28 pages of specification (pages 1-6, 8-29), including claims and the abstract, are located among the application papers. However, page 7 of the specification has not been located in the Official file. The Patent and Trademark Office (Office) file is the official record of the papers filed in this application. A review of the official file reveals that no copy of a date stamped filing receipt indicating that 29 pages of specification, claims and abstract was filed.

The best evidence of what was filed on February 1, 2000, is applicant's postcard receipt. "If a receipt of any item (e.g., paper or fee) filed in the USPTO is desired, it may be obtained by enclosing with the paper a self-addressed postcard specifically identifying the item. The USPTO will stamp the receipt date on the postcard and place it in the outgoing mail. A postcard receipt which itemizes and properly identifies the

[1]Petitioner provides a copy of his patent application mailing card; however, the mailing card does not contain the USPTO date stamp indicating receipt herein.

items which are being filed serves as prima facie evidence of receipt in the USPTO of all items listed thereon on the date stamped thereon by the USPTO.." MPEP § 503.

It is noted that this petition is dismissed without prejudice. Petitioner should submit a copy of a return receipt postcard evincing receipt by the Office of page 7 of the specification.

Any request for reconsideration should be filed within **TWO MONTHS** of the date of this Decision in order to be considered timely. 37 CFR 1.181(f). This time period may not be extended pursuant to 37 CFR 1.136.

Further correspondence with respect to this matter should be addressed as follows:

By mail: Commissioner for Patents
Box DAC
Washington, D.C. 20231

By facsimile: (703) 308-6916
Attn: Office of Petitions

By hand: Office of Petitions
2201 South Clark Place
Crystal Plaza 4, Suite 3C23
Arlington, VA 22202

This application is being forwarded to the Office of Initial Patent Examination for further processing with a filing date of February 1, 2000, using pages 1 - 6 and 8 - 29 of specification filed on that date.

Telephone inquiries concerning this decision should be directed to Petitions Attorney Derek L. Woods at (703) 305-0014.

Beverly M. Flanagan
Supervisory Petitions Examiner
Office of Petitions

Derek L. Woods
Petitions Attorney
Office of Petitions

UNITED STATES PATENT AND TRADEMARK OFFICE

Commissioner for Patents
United States Patent and Trademark Office
Washington, D.C. 20231
www.uspto.gov

Paper No. 8

COPY MAILED

AUG 2 9 2003

OFFICE OF PETITIONS

Kent N Stone
NASA Glenn Research Center
Mail Stop 500 118
21000 Brookpark Road
Cleveland, OH 44135

In re Application of
Duffy et al.
Application No. 09/498,794
Filed: February 1, 2000
Attorney Docket Number: LEW16,833-1

DECISION GRANTING PETITION

This is a decision on the Request for Reconsideration of Dismissed Petition to Accept Missing Item in New Application under 37 CFR 1.182, requesting the application be accorded a filing date February 1, 2000, including page 7 of the specification.

The petition is granted.

The application was filed on February 1, 2000. However, on April 4, 2000, the Office mailed a "Notice of Omitted Item(s) in a Nonprovisional Application" (hereinafter "Notice"), indicating, that the application had been accorded a filing date of February 1, 2000, and advising applicant that page 7 of the specification appeared to have been omitted.

Background

In response, on November 13, 2002, Petitioner filed a petition wherein Petitioner averred that page 7 of the specification was filed with the application. The contention was supported by the Declaration Kent N. Stone, and a patent application mailing card which putatively indicate that 29 pages of specification were filed on February 1, 2000. However, the application file did not contain a copy of a date stamped filing receipt[1]. That petition was dismissed without prejudice in a Decision mailed on May 15, 2003. The Dismissal required a copy of applicant's postcard receipt.

The instant petition

In response to the Dismissal, Petitioner files the instant renewed petition and includes a copy of the return-receipt postcard acknowledging receipt of 29 pages of specification filed on February 1, 2000.

A review of the return receipt postcard reveals that Petitioner is correct. The postcard acknowledges receipt of 29 pages of specification filed on February 1, 2000. Petitioner has also re-submitted page 7 of the specification with the instant petition.

---

[1]Petitioner provided a copy of his patent application mailing card; however, the mailing card did not contain the USPTO date stamp indicating receipt herein.

Evidence of receipt of any correspondence filed in the Patent and Trademark Office can be obtained by submitting a self-addressed postcard properly itemizing and identifying the paper or papers being filed. Upon receipt of the correspondence, the Patent and Trademark Office will check the listing on the post card against the papers submitted, making sure that all items listed are present and will then stamp the postcard with an Official date stamp and place the postcard in the outgoing mail. "A postcard receipt which itemizes and properly identifies the papers which are being filed serves as *prima facie* evidence of receipt in the PTO of all items listed thereon by the PTO." MPEP § 503.

The petition is **granted**. The Notice of Incomplete Nonprovisional Application, mailed April 4, 2000, is hereby withdrawn.

No petition fee has been charged, and none is due.

The application will be returned to the Office of Initial Patent Examination for further processing as a nonprovisional application with a filing date of February 1, 2000, using the original application papers filed, along with page 7 of the specification filed on November 13, 2002. The Office record should reflect that 29 pages of specification were present on filing.

Telephone inquiries concerning this matter should be directed to the undersigned at (703) 305-0014.

Derek L. Woods
Petitions Attorney
Office of Petitions

UNITED STATES PATENT AND TRADEMARK OFFICE

COMMISSIONER FOR PATENTS
UNITED STATES PATENT AND TRADEMARK OFFICE
P.O. BOX 1450
ALEXANDRIA, VA 22313-1450
WWW.USPTO.GOV

Paper No. 10

Helfgott & Karas PC
Empire State Building 60th floor
New York NY 10118

COPY MAILED

SEP 10 2004

OFFICE OF PETITIONS

In re Application of
Kazuhiko Yamaguchi
Application No. 09/498,857
Filed: February 7, 2000
Attorney Docket No.: FUJI 16.987
Title: BASE STATION APPARATUS

DECISION ON PETITION

This is a decision on the petition under 37 CFR § 1.137(b)[1], filed June 15, 2004, to revive the above-identified application.

The above-identified application became abandoned for failure to submit the issue in a timely manner in reply to the Notice of Allowance and Issue Fee Due, mailed March 24, 2003, which set a shortened statutory period for reply of three (3) months. No extensions of time are permitted for transmitting issue fees[2]. Accordingly, the above-identified application became abandoned on June 25, 2003. A Notice of Abandonment was mailed July 23, 2003.

With the instant petition, Petitioner has met the requirements to revive the above-identified application, pursuant to 37 CFR 1.137(b). Petitioner submitted the required reply in the form of the filing of the issue and petition fees, and has made the proper statement of unintentional delay.

The petition is **GRANTED**.

After this decision is mailed, the application will be forwarded to the Office of Patent Publication for further processing into a patent.

Questions pertaining to this application should be directed towards the Office of Patent Publication at (703) 305-8497.

---

1 A grantable petition pursuant to 37 CFR 1.137(b) must be accompanied by:
(1) The reply required to the outstanding Office action or notice, unless previously filed;
(2) The petition fee as set forth in § 1.17(m);
(3) A statement that the entire delay in filing the required reply from the due date for the reply until the filing of a grantable petition pursuant to this paragraph was unintentional. The Commissioner may require additional information where there is a question whether the delay was unintentional, and;
(4) Any terminal disclaimer (and fee as set forth in § 1.20(d)) required pursuant to paragraph (d) of this section.

2 See MPEP §710.02(e).

Telephone inquiries regarding this decision should be directed to the undersigned at (703) 305-0011. Please note that on approximately September 28, 2004, the Office of Petitions will relocate to the new PTO location in Alexandria. Although the mailing address will remain the same, the general phone number for the Office of Petitions which should be used for status requests will change to 571-272-3282, and the telephone number for the undersigned will change to 571-272-3225.

Paul Shanoski
Senior Attorney
Office of Petitions
United States Patent and Trademark Office

UNITED STATES PATENT AND TRADEMARK OFFICE

Commissioner for Patents
United States Patent and Trademark Office
P.O. Box 1450
Alexandria, VA 22313-1450
www.uspto.gov

In re Patent No. 6532308
Issue Date: March 11,2003
Application No. 09498924
Filed: February 4,2000
Attorney Docket No. 4756 US

:

:DECISION GRANTING PETITION
:UNDER 37 CFR 1.378(c)

:

This is a decision on the electronic petition, filed March 28,2007 ,under 37 CFR 1.378(c) to accept the unintentionally delayed payment of the 3.5 year maintenance fee for the above-identified patent.

The petition is GRANTED.

The maintenance fee is accepted, and the above-identified patent reinstated as of March 28,2007 . This decision also constitutes notice that the fee has been accepted. An electronic copy of the petition and this decision has been created as an entry in an Image File Wrapper. Nevertheless, petitioner should print and retain an independent copy

Telephone inquires related to this electronic decision should be directed to the Electronic Business Center at 1-866-217-9197.

Under the Paperwork Reduction Act of 1995, no persons are required to respond to a collection of information unless it displays valid OMB control number.

PETITION TO ACCEPT UNINTENTIONALLY DELAYED PAYMENT OF MAINTENANCE FEE IN AN EXPIRED PATENT (37 CFR 1.378(c))

Patent Number	Issue Date (YYYY-MM-DD)	Application Number	Filing Date (YYYY-MM-DD)	Docket Number (if applicable)
6532308	2003-03-11	09498924	2000-02-04	2418/119

CAUTION: Maintenance fee (and surcharge, if any) payment must correctly identify: (1) the patent number and (2) the application number of the actual U.S. application leading to issuance of that patent to ensure the fee(s) is/are associated with the correct patent. 37 CFR 1.366(c) and (d).

SMALL ENTITY
☒ Patentee claims, or has previously claimed, small entity status. See 37 CFR 1.27.

LOSS OF ENTITLEMENT TO SMALL ENTITY STATUS
☐ Patentee is no longer entitled to small entity status. See 37 CFR 1.27(g)

NOT Small Entity		Small Entity	
Fee	Code	Fee	Code
○ 3 ½ year	(1551)	◉ 3 ½ year	(2551)
○ 7 ½ year	(1552)	○ 7 ½ year	(2552)
○ 11 ½ year	(1553)	○ 11 ½ year	(2553)

SURCHARGE
The surcharge required by 37 CFR 1.20(i)(2) (Fee Code 1558) must be paid as a condition of accepting unintentionally delayed payment of the maintenance fee.

MAINTENANCE FEE (37 CFR 1.20(e)-(g))
The appropriate maintenance fee must be submitted with this petition.

STATEMENT
THE UNDERSIGNED CERTIFIES THAT THE DELAY IN PAYMENT OF THE MAINTENANCE FEE TO THIS PATENT WAS UNINTENTIONAL

PETITIONER(S) REQUEST THAT THE DELAYED PAYMENT OF THE MAINTENANCE FEE BE ACCEPTED AND THE PATENT REINSTATED

THIS PORTION MUST BE COMPLETED BY THE SIGNATORY OR SIGNATORIES

37 CFR 1.378(d) states: "Any petition under this section must be signed by an attorney or agent registered to practice before the Patent and Trademark Office, or by the patentee, the assignee, or other party in interest."

I certify, in accordance with 37 CFR 1.4(d)(4) that I am

◉ An attorney or agent registered to practice before the Patent and Trademark Office

○ A sole patentee

○ A joint patentee; I certify that I am authorized to sign this submission on behalf of all the other patentees.

○ A joint patentee; all of whom are signing this e-petition

○ The assignee of record of the entire interest

Patent Practitioner			
A signature of the applicant or representative is required in accordance with 37 CFR 1.33 and 10.18. Please see 37 CFR 1.4(d) for the form of the signature			
Signature	/John J. Stickevers/	Date (YYYY-MM-DD)	2007-03-28
Name	John J. Stickevers	Registration Number	39387

This collection of information is required by 37 CFR 1.378(c). The information is required to obtain or retain a benefit by the public which is to file (and by the USPTO to process) an application. Confidentiality is governed by 35 U.S.C. 122 and 37 CFR 1.11 and 1.14. This collection is estimated to take 1 hour to complete, including gathering, preparing, and submitting the completed application form to the USPTO. Time will vary depending upon the individual case. Any comments on the amount of time you require to complete this form and/ or suggestions for reducing this burden, should be sent to the Chief Information Officer, U.S. Patent and Trademark Office, U.S. Department of Commerce, P.O. Box 1450, Alexandria, VA 22313-1450. DO NOT SEND FEES OR COMPLETED FORMS TO THIS ADDRESS. **This form can only be used when in conjunction with EFS-Web. If this form is mailed to the USPTO, it may cause delays in reinstating the patent.**

Privacy Act Statement

The Privacy Act of 1974 (P.L. 93-579) requires that you be given certain information in connection with your submission of the attached form related to a patent application or patent. Accordingly, pursuant to the requirements of the Act, please be advised that: (1) the general authority for the collection of this information is 35 U.S.C. 2(b)(2); (2) furnishing of the information solicited is voluntary; and (3) the principal purpose for which the information is used by the U.S. Patent and Trademark Office is to process and/or examine your submission related to a patent application or patent. If you do not furnish the requested information, the U.S. Patent and Trademark Office may not be able to process and/or examine your submission, which may result in termination of proceedings or abandonment of the application or expiration of the patent.

The information provided by you in this form will be subject to the following routine uses:

1. The information on this form will be treated confidentially to the extent allowed under the Freedom of Information Act (5 U.S.C. 552) and the Privacy Act (5 U.S.C. 552a). Records from this system of records may be disclosed to the Department of Justice to determine whether the Freedom of Information Act requires disclosure of these record s.

2. A record from this system of records may be disclosed, as a routine use, in the course of presenting evidence to a court, magistrate, or administrative tribunal, including disclosures to opposing counsel in the course of settlement negotiations.

3. A record in this system of records may be disclosed, as a routine use, to a Member of Congress submitting a request involving an individual, to whom the record pertains, when the individual has requested assistance from the Member with respect to the subject matter of the record.

4. A record in this system of records may be disclosed, as a routine use, to a contractor of the Agency having need for the information in order to perform a contract. Recipients of information shall be required to comply with the requirements of the Privacy Act of 1974, as amended, pursuant to 5 U.S.C. 552a(m).

5. A record related to an International Application filed under the Patent Cooperation Treaty in this system of records may be disclosed, as a routine use, to the International Bureau of the World Intellectual Property Organization, pursuant to the Patent Cooperation Treaty.

6. A record in this system of records may be disclosed, as a routine use, to another federal agency for purposes of National Security review (35 U.S.C. 181) and for review pursuant to the Atomic Energy Act (42 U.S.C. 218(c)).

7. A record from this system of records may be disclosed, as a routine use, to the Administrator, General Services, or his/her designee, during an inspection of records conducted by GSA as part of that agency's responsibility to recommend improvements in records management practices and programs, under authority of 44 U.S.C. 2904 and 2906. Such disclosure shall be made in accordance with the GSA regulations governing inspection of records for this purpose, and any other relevant (i.e., GSA or Commerce) directive. Such disclosure shall not be used to make determinations about individuals.

8. A record from this system of records may be disclosed, as a routine use, to the public after either publication of the application pursuant to 35 U.S.C. 122(b) or issuance of a patent pursuant to 35 U.S.C. 151. Further, a record may be disclosed, subject to the limitations of 37 CFR 1.14, as a routine use, to the public if the record was filed in an application which became abandoned or in which the proceedings were terminated and which application is referenced by either a published application, an application open to public inspections or an issued patent.

9. A record from this system of records may be disclosed, as a routine use, to a Federal, State, or local law enforcement agency, if the USPTO becomes aware of a violation or potential violation of law or regulation.

UNITED STATES PATENT AND TRADEMARK OFFICE

Commissioner for Patents
United States Patent and Trademark Office
P.O. Box 1450
Alexandria, VA 22313-1450
www.uspto.gov

FREESCALE SEMICONDUCTOR, INC.
LAW DEPARTMENT
7700 WEST PALMER LANE MF:TX32/PL02
AUSTIN, TX 78729

COPY MAILED

SEP 2 9 2005

OFFICE OF PETITIONS

In re Application of	:	
Dae Young-Kim	:	
Application No. 09/499,014	:	ON PETITION
Filed: February 4, 2000	:	
For: METHOD AND APPARATUS FOR	:	
THE CONTROL OF MODEM TRANSMIT	:	
POWER	:	

This is a decision on the Petition for Revival of Abandoned Application under 37 CFR 1.137(b), filed via facsimile September 12, 2005.

This Petition is hereby **granted**.

The above-identified application became abandoned for failure to timely and properly reply to the Notice of Allowance and Issue Fee Due, mailed April 15, 2005. The Notices set a non-extendable three (3) month period for reply. No reply having been received, the application became abandoned on July 16, 2005.

With the instant petition, Applicant has satisfied the requirements of a grantable petition under 37 CFR 1.137(a). The issue fee is filed with the instant petition. Accordingly, the petition is granted.

The correspondence address in the petition differs from the correspondence address of record. A copy of this decision is being mailed to the address appearing in the petition; however, all future correspondence will be mailed to the correspondence address of record until proper correspondence address change has been filed with the Office.

This application is being referred to Publishing Division for processing into a patent.

Telephone inquiries concerning this decision should be directed to the undersigned at (571) 272-3232.

Derek L. Woods
Attorney
Office of Petitions

Cc: JACK SCHWARTZ
1350 BROADWAY
SUITE 1510
NEW YORK, NY 10018

UNITED STATES PATENT AND TRADEMARK OFFICE

COMMISSIONER FOR PATENTS
UNITED STATES PATENT AND TRADEMARK OFFICE
P.O. BOX 1450
ALEXANDRIA, VA 22313-1450
www.uspto.gov

FREESCALE SEMICONDUCTOR, INC.
LAW DEPARTMENT
7700 WEST PARMER LANE MD:TX32/PL02
AUSTIN, TX 78729

COPY MAILED

JUN 16 2006

OFFICE OF PETITIONS

In re Application of:	:	
Kim et al.	:	
Application No. 09/499,014	:	DECISION ON
Filed: February 4, 2000	:	PETITION
Attorney Docket Number: CX020003	:	

This is a decision in response to the petition under 37 CFR 1.137(b), filed May 25, 2006, to revive the above-identified application.

The above-identified application became abandoned for failure to timely and properly reply to the Notice Regarding Drawings (hereinafter "Notice"). A Notice of Abandonment was mailed on April 26, 2006.

With the instant petition, Applicant has filed corrected drawings in response to the Notice.

Having found that all of the requirements for a grantable petition under 37 CFR 1.137(b) have been met, **this petition is hereby granted.**

The address on the petition is different from the address of record. If Petitioner desires to receive further correspondence with respect to this application, a change of correspondence address must be filed. A courtesy copy of this Decision is being forwarded to Petitioner at the address appearing on the petition; however, all future correspondence will be sent to address of record until instructions to the contrary are received.

This application is being forwarded to Publishing Division for processing into a patent.

Telephone inquiries related to this decision may be directed to the undersigned at (571) 272-3232.

Derek L. Woods
Attorney
Office of Petitions

UNITED STATES PATENT AND TRADEMARK OFFICE

Commissioner for Patents
United States Patent and Trademark Office
P.O. Box 1450
Alexandria, VA 22313-1450
www.uspto.gov

In re Patent No. 6231766
Issue Date: May 15,2001
Application No. 09499217
Filed: February 7,2000
Attorney Docket No. VAH-1C

:

:DECISION GRANTING PETITION
:UNDER 37 CFR 1.378(c)

:

This is a decision on the electronic petition, filed October 7,2009 ,under 37 CFR 1.378(c) to accept the unintentionally delayed payment of the 7.5 year maintenance fee for the above-identified patent.

The petition is **GRANTED**.

The maintenance fee is accepted, and the above-identified patent reinstated as of October 7,2009 .
This decision also constitutes notice that the fee has been accepted. An electronic copy of the petition and this decision has been created as an entry in the Image File Wrapper. Nevertheless, petitioner should print and retain an independent copy.

Telephone inquiries related to this electronic decision should be directed to the Electronic Business Center at 1-866-217-9197.

PTO/SB/66 (03-09)
Approved for use through 03/31/2012. OMB 0651-0016
U.S. Patent and Trademark Office: U.S. DEPARTMENT OF COMMERCE
Under the Paperwork Reduction Act of 1995, no persons are required to respond to a collection of information unless it displays valid OMB control number.

PETITION TO ACCEPT UNINTENTIONALLY DELAYED PAYMENT OF MAINTENANCE FEE IN AN EXPIRED PATENT (37 CFR 1.378(c))

Patent Number	Issue Date (YYYY-MM-DD)	Application Number	Filing Date (YYYY-MM-DD)	Docket Number (if applicable)
6231766	2001-05-15	09499217	2000-02-07	355P008

CAUTION: Maintenance fee (and surcharge, if any) payment must correctly identify: (1) the patent number and (2) the application number of the actual U.S. application leading to issuance of that patent to ensure the fee(s) is/are associated with the correct patent. 37 CFR 1.366(c) and (d).

SMALL ENTITY
☒ Patentee claims, or has previously claimed, small entity status. See 37 CFR 1.27.

LOSS OF ENTITLEMENT TO SMALL ENTITY STATUS
☐ Patentee is no longer entitled to small entity status. See 37 CFR 1.27(g)

NOT Small Entity			Small Entity		
	Fee	Code		Fee	Code
○	3 ½ year	(1551)	○	3 ½ year	(2551)
○	7 ½ year	(1552)	◉	7 ½ year	(2552)
○	11 ½ year	(1553)	○	11 ½ year	(2553)

SURCHARGE
The surcharge required by 37 CFR 1.20(i)(2) (Fee Code 1558) must be paid as a condition of accepting unintentionally delayed payment of the maintenance fee.

MAINTENANCE FEE (37 CFR 1.20(e)-(g))
The appropriate maintenance fee must be submitted with this petition.

STATEMENT
THE UNDERSIGNED CERTIFIES THAT THE DELAY IN PAYMENT OF THE MAINTENANCE FEE TO THIS PATENT WAS UNINTENTIONAL

PETITIONER(S) REQUEST THAT THE DELAYED PAYMENT OF THE MAINTENANCE FEE BE ACCEPTED AND THE PATENT REINSTATED

THIS PORTION MUST BE COMPLETED BY THE SIGNATORY OR SIGNATORIES

37 CFR 1.378(d) states: "Any petition under this section must be signed by an attorney or agent registered to practice before the Patent and Trademark Office, or by the patentee, the assignee, or other party in interest."

I certify, in accordance with 37 CFR 1.4(d)(4) that I am

◉ An attorney or agent registered to practice before the Patent and Trademark Office

○ A sole patentee

○ A joint patentee; I certify that I am authorized to sign this submission on behalf of all the other patentees.

○ A joint patentee; all of whom are signing this e-petition

○ The assignee of record of the entire interest

Patent Practitioner			
A signature of the applicant or representative is required in accordance with 37 CFR 1.33 and 10.18. Please see 37 CFR 1.4(d) for the form of the signature			
Signature	/George R. McGuire/	Date (YYYY-MM-DD)	2009-10-07
Name	George R. McGuire	Registration Number	36603

This collection of information is required by 37 CFR 1.378(c). The information is required to obtain or retain a benefit by the public which is to file (and by the USPTO to process) an application. Confidentiality is governed by 35 U.S.C. 122 and 37 CFR 1.11 and 1.14. This collection is estimated to take 1 hour to complete, including gathering, preparing, and submitting the completed application form to the USPTO. Time will vary depending upon the individual case. Any comments on the amount of time you require to complete this form and/ or suggestions for reducing this burden, should be sent to the Chief Information Officer, U.S. Patent and Trademark Office, U.S. Department of Commerce, P.O. Box 1450, Alexandria, VA 22313-1450. DO NOT SEND FEES OR COMPLETED FORMS TO THIS ADDRESS. **This form can only be used when in conjunction with EFS-Web. If this form is mailed to the USPTO, it may cause delays in reinstating the patent.**

Privacy Act Statement

The Privacy Act of 1974 (P.L. 93-579) requires that you be given certain information in connection with your submission of the attached form related to a patent application or patent. Accordingly, pursuant to the requirements of the Act, please be advised that: (1) the general authority for the collection of this information is 35 U.S.C. 2(b)(2); (2) furnishing of the information solicited is voluntary; and (3) the principal purpose for which the information is used by the U.S. Patent and Trademark Office is to process and/or examine your submission related to a patent application or patent. If you do not furnish the requested information, the U.S. Patent and Trademark Office may not be able to process and/or examine your submission, which may result in termination of proceedings or abandonment of the application or expiration of the patent.

The information provided by you in this form will be subject to the following routine uses:

1. The information on this form will be treated confidentially to the extent allowed under the Freedom of Information Act (5 U.S.C. 552) and the Privacy Act (5 U.S.C. 552a). Records from this system of records may be disclosed to the Department of Justice to determine whether the Freedom of Information Act requires disclosure of these records.

2. A record from this system of records may be disclosed, as a routine use, in the course of presenting evidence to a court, magistrate, or administrative tribunal, including disclosures to opposing counsel in the course of settlement negotiations.

3. A record in this system of records may be disclosed, as a routine use, to a Member of Congress submitting a request involving an individual, to whom the record pertains, when the individual has requested assistance from the Member with respect to the subject matter of the record.

4. A record in this system of records may be disclosed, as a routine use, to a contractor of the Agency having need for the information in order to perform a contract. Recipients of information shall be required to comply with the requirements of the Privacy Act of 1974, as amended, pursuant to 5 U.S.C. 552a(m).

5. A record related to an International Application filed under the Patent Cooperation Treaty in this system of records may be disclosed, as a routine use, to the International Bureau of the World Intellectual Property Organization, pursuant to the Patent Cooperation Treaty.

6. A record in this system of records may be disclosed, as a routine use, to another federal agency for purposes of National Security review (35 U.S.C. 181) and for review pursuant to the Atomic Energy Act (42 U.S.C. 218(c)).

7. A record from this system of records may be disclosed, as a routine use, to the Administrator, General Services, or his/her designee, during an inspection of records conducted by GSA as part of that agency's responsibility to recommend improvements in records management practices and programs, under authority of 44 U.S.C. 2904 and 2906. Such disclosure shall be made in accordance with the GSA regulations governing inspection of records for this purpose, and any other relevant (i.e., GSA or Commerce) directive. Such disclosure shall not be used to make determinations about individuals.

8. A record from this system of records may be disclosed, as a routine use, to the public after either publication of the application pursuant to 35 U.S.C. 122(b) or issuance of a patent pursuant to 35 U.S.C. 151. Further, a record may be disclosed, subject to the limitations of 37 CFR 1.14, as a routine use, to the public if the record was filed in an application which became abandoned or in which the proceedings were terminated and which application is referenced by either a published application, an application open to public inspections or an issued patent.

9. A record from this system of records may be disclosed, as a routine use, to a Federal, State, or local law enforcement agency, if the USPTO becomes aware of a violation or potential violation of law or regulation.

UNITED STATES PATENT AND TRADEMARK OFFICE

COMMISSIONER FOR PATENTS
UNITED STATES PATENT AND TRADEMARK OFFICE
P.O. BOX 1450
ALEXANDRIA, VA 22313-1450
www.uspto.gov

Paper No. 20

BLAKELY SOKOLOFF TAYLOR & ZAFMAN
12400 WILSHIRE BLVD., 7TH FLOOR
LOS ANGELES, CA 90025-1026

COPY MAILED
OCT 27 2003
OFFICE OF PETITIONS

In re Application of
Ahmad Zandi et al
Application No. 09/499,255
Filed: February 7, 2000
Attorney Docket No. 074451.P024XD

ON PETITION

This is a decision on the petition under 37 CFR 1.137(b), filed October 6, 2003, to revive the above-identified application.

The petition is **GRANTED**.

The above-identified application became abandoned for failure to reply within the meaning of 37 CFR 1.113 in a timely manner to the final Office action mailed October 22, 2002, which set a shortened statutory period for reply of three (3) months. Two months extension of time under the provisions of 37 CFR 1.136(a) were obtained. Accordingly, the above-identified application became abandoned on March 23, 2003.

The above-identified application is being revived solely for purposes of continuity with a Request For Continued Examination (RCE) filed on October 6, 2003.

Telephone inquiries concerning this decision should be directed to Irvin Dingle at (703) 306-5684.

The application file is being forwarded to Technology Center AU 2621 for further processing.

Irvin Dingle
Petitions Examiner
Office of Petitions
Office of the Deputy Commissioner
for Patent Examination Policy

UNITED STATES PATENT AND TRADEMARK OFFICE

Commissioner for Patents
United States Patent and Trademark Office
P.O. Box 1450
Alexandria, VA 22313-1450
www.uspto.gov

Patent No. : 7,471,344 B1
Serial No. : 09/499,369
Inventor(s) : Wakabayashi
Issued : December 30, 2008
Title : **DISPLAY APPARATUS PERIODICALLY MODULATING IMAGE-SIGNAL CHARACTERISTICS**
Docket No. : **1190-0437P**

Re: Request for Reconsideration

Consideration has been given your request for the issuance of a certificate of correction for the above-identified patent under the provisions of 37 CFR 1.322 and/or 1.323.

Assignees' names and addresses (assignment data) printed in a patent are based *solely* on information supplied in the appropriate space for identifying the assignment data, i.e., item 3 of the Fee(s) Transmittal Form PTOL-85B. After payment of the issue fee, correction of assignment data submitted on the PTOL-85B can only be done by Certificate of Correction under 37 CFR 1.323, with a request under 37 CFR 3.81(b).

A request for a patent to be corrected to state the name of the assignee must:

A. state that the assignment was submitted for recordation as set forth in 37 CFR 3.11 before issuance of the patent;
B. include a request for a certificate of correction under 37 CFR 1.323 along with the fee set forth in 37 CFR 1.20(a); and
C. include the processing fee set forth in 37 CFR 1.17(i).

If the request is granted, Certificates of Correction Branch will be notified that a Certificate of Correction may be issued.
See Manual of Patent Examining Procedure, Section 1481.01 (Rev. 3) (Oct. 2005).

Applicant has not included items A and or C above, accordingly, the request for Certificate of Correction to add or change the assignee data is dismissed.
Any request under 37 CFR 3.81(b) should be directed to the following address or facsimile number:

By mail: Mail Stop PETITIONS
Commissioner for Patents

Post Office Box 1450
Alexandria, VA 22313-1450

By hand: Customer Service Window
Mail Stop Petitions
Randolph Building
401 Dulany Street
Alexandria, VA 22314

By fax: 571-273-8300
ATTN: Office of Petitions

If a fee (currently $100) was previously submitted for consideration of a Request for Certificate of Correction, under CFR 1.323, to correct assignment data, no additional fee is required.

A certificate of correction will be issued to correct the remaining errors noted in your request.

Ernest C. White, *LIE*
For Mary F. Diggs (703) 756-1580
Decisions & Certificates
of Correction Branch
(703) **756-1590**

Birch Stewart Kolasch & Birch LLP
P O Box 747
Falls Church VA 22040-0747

ecw

UNITED STATES PATENT AND TRADEMARK OFFICE

Commissioner for Patents
United States Patent and Trademark Office
P.O. Box 1450
Alexandria, VA 22313-1450
www.uspto.gov

HUMAN GENOME SCIENCES INC.
INTELLECTUALPROPERTY DEPT.
14200 SHADY GROVE ROAD
ROCKVILE MD 20850

COPY MAILED

JAN 31 2006

OFFICE OF PETITIONS

In re Application of	:	
Ralphy Alderson et al	:	
Application No. 09/499,468	:	ON PETITION
Filed: February 7, 2000	:	
Attorney Docket No. PF112U1	:	

This is a decision on the petition, filed January 27, 2006, under 37 CFR 1.313(c)(2) to withdraw the above-identified application from issue after payment of the issue fee.

The petition is **GRANTED**.

The above-identified application is withdrawn from issue for consideration of a submission under 37 CFR 1.114 (request for continued examination). See 37 CFR 1.313(c)(2).

Petitioner is advised that the issue fee paid on March 14, 2005, in the above-identified application cannot be refunded. If, however, the above-identified application is again allowed, petitioner may request that it be applied towards the issue fee required by the new Notice of Allowance.[1]

There is no indication that the person signing the instant petition was ever given a power of attorney or authorization of agent to prosecute the above-identified application. If the person signing the instant petition desires to receive future correspondence regarding this application, the appropriate power of attorney or authorization of agent must be submitted. While a courtesy copy of this decision is being mailed to the person signing the instant petition, all future correspondence will be directed to the address currently of record until such time as appropriate instructions are received to the contrary.

Telephone inquiries should be directed to the undersigned at (571) 272-3208.

---

[1] The request to apply the issue fee to the new Notice may be satisfied by completing and returning the new Issue Fee Transmittal Form PTOL-85(b), which includes the following language thereon: "Commissioner for Patents is requested to apply the Issue Fee and Publication Fee (if any) or re-apply any previously paid issue fee to the application identified above." Petitioner is advised that, whether a fee is indicated as being due or not, the Issue Fee Transmittal Form **must** be completed and timely submitted to avoid abandonment. Note the language in bold text on the first page of the Notice of Allowance and Fee(s) Due (PTOL-85).

The examiner of Technology Center AU 1647 will consider the request for continued examination under 37 CFR 1.114.

Karen Creasy

Karen Creasy
Petitions Examiner
Office of Petitions
Office of the Deputy Commissioner
for Patent Examination Policy

cc:
STERNE, KESSLER, GOLDSTEIN & FOX
1100 NEW YORK AVENUE, N.W.
WASHINGTON, D.C. 20005-3934

UNITED STATES PATENT AND TRADEMARK OFFICE

COMMISSIONER FOR PATENTS
UNITED STATES PATENT AND TRADEMARK OFFICE
P.O. BOX 1450
ALEXANDRIA, VA 22313-1450
www.uspto.gov

Paper No. _____

Date : January 31, 2006

TO : Director, Office of Patent Publication

FROM : Office of the Deputy Commissioner for Patent Examination Policy

SUBJECT : Withdrawal from Issue of

COPY MAILED
JAN 31 2006
OFFICE OF PETITIONS

Applicant(s) :Ralph Alderson et al
Application No. :09/499,468
Filed :February 7, 2000

The above-identified application has been assigned Patent No. 6,995,132 and an issue date of February 7, 2006.

It is hereby directed that this application be withdrawn from issue at the request of the applicant.

Do not refund the issue fee.

The following erratum should be published in the Official Gazette if the above-identified application is published in the OG of February 7, 2006:

"All reference to Patent No. 6,995,132 to Ralph Alderson et al of Maryland for USE OF VASCULAR ENDOTHELIAL GROWTH FACTOR TO TREAT PHOTORECEPTOR CELLS appearing in the Official Gazette of February 7, 2006 should be deleted since no patent was granted."

Karen Creasy

Karen Creasy
Petitions Examiner
Office of Petitions
Office of the Deputy Commissioner
for Patent Examination Policy

cc: Paul Harrison, MDW-4B03,(FAX-273-5468)
Deneise Boyd, MDE-3D39 (FAX-273-5124)
Mary Louise McAskill, ST-8C15 (FAX 305-4372)
Niomi Farmer, ST-8C14 (FAX-305-4372)
Mary E. Johnson (Cookie), MDE-7C71 (FAX 273-0038
Duane Davis P/OPC MDE-7D89
Tamara Greene, ST-8C13

UNITED STATES PATENT AND TRADEMARK OFFICE

Commissioner for Patents
United States Patent and Trademark Office
P.O. Box 1450
Alexandria, VA 22313-1450
www.uspto.gov

STERNE KESSLER GOLDSTEIN & FOX PLLC
1100 NEW YORK AVENUE NW
WASHINGTON, DC 20005

COPY MAILED
MAY 17 2006
OFFICE OF PETITIONS

In re Application of	:	
Ralph Alderson et al	:	
Application No. 09/499,468	:	DECISION DISMISSING PETITION
Filed: February 7, 2000	:	UNDER 37 CFR 1.313(a)
Attorney Docket No. PF112U1	:	

This is a decision on the petition under 37 CFR 1.313(c)(2), filed May 15, 2006, which is being treated as a petition under 37 CFR 1.313(a) requesting withdrawal of the above-identified application from issue.

The petition is **dismissed** as moot for the reasons stated below.

A review of the file record discloses that a Notice of Allowance was mailed on February 8, 2006, with the issue fee being due on or before May 8, 2006. The issue fee in this case has not been paid. The record further discloses that a Request for Continued Examination (RCE) under the provisions of 37 CFR 1.114 and Information Disclosure Statement (IDS) were filed on April 26, 2006, which date is prior to the due date for payment of the issue fee.

The filing of a petition under 37 CFR 1.313(a) is unnecessary, since the mere filing of an RCE and submission (in this case, the IDS) will effectively withdraw an application from issue prior to the due date for payment of the issue fee. In view thereof, the petition to withdraw from issue is dismissed as involving a moot issue. *Note* MPEP §§ 706.07(h)(IX) and 1308.

No fee has been assessed to the instant petition under 37 CFR 1.313.

Inquiries concerning this decision may be directed to the undersigned at (571) 272-3218.

The matter is being referred to Technology Center AU 1647 for appropriate processing of the RCE filed April 26, 2006, and for consideration of the concurrently filed IDS.

Frances Hicks
Petitions Examiner
Office of Petitions

UNITED STATES PATENT & TRADEMARK OFFICE
UNDER SECRETARY OF COMMERCE FOR
INTELLECTUAL PROPERTY AND DIRECTOR OF THE
UNITED STATES PATENT AND TRADEMARK OFFICE
Washington, D.C. 20231

FEB - 6 2002

#7
DW

MAILED

FEB - 6 2002

OFFICE OF THE DIRECTOR
TC 3600

Allan Cameron
1 Edson Road
South Natick, MA 01760

In re Application of
Allan Cameron
Application No. 09/499,550
Filed: February 2, 2000
For: SAFETY SHIELD WINDOW INSERT

DECISION ON PETITION
TO WITHDRAW THE
HOLDING OF ABANDONMENT

This is in response to applicant's petition to withdraw the holding of abandonment, filed in the United States Patent and Trademark Office (USPTO), on January 3, 2002.

The petition is **GRANTED**.

A review of the file record indicates that an Office action was mailed on December 22, 2000 wherein a three-month shortened statutory period for response was set. A communication was filed on March 22, 2001 which contained an amendment to the specification and claims and included a cover sheet form PTO/SB/30 "Request for Continued Examination Transmittal". A Notice of Improper Request for Continued Examination (RCE) was mailed on April 26, 2001. A Notice of Abandonment was mailed on July 30, 2001 wherein the examiner held that the reply filed March 22, 2001 was not a proper reply to the Office action dated December 22, 2000.

Applicant asserts that a timely response was filed on March 18, 2001 and has submitted documents to support this assertion. Applicant has also provided a notification of a change of address because he has recently moved and did not receive the Improper Request for Continued Examination until much later after its mailing. Also, applicant asserts that he never received the Notice of Abandonment.

A closer review of the communication filed March 22, 2001 reveals that it included an amendment to the specification and claims and a discussion of the prior art relied on in the Office action of December 22, 2000. Therefore, upon reconsideration, the communication filed March 22, 2001 has been treated as a timely response to the Office action of December 22, 2000. The holding of abandonment is hereby withdrawn.

Applicant is advised that the transmittal form PTO/SB/30 "Request for Continued Examination (RCE)" should not be used for anything but the filing of a request for continued examination (RCE). A request for a continued examination may be filed with the payment of the specified fee once prosecution in the application is closed (e.g., the application is under final rejection or a notice of allowance).

The application is being forwarded to the Supervisory Legal Instruments Examiner for entry of the amendment filed on March 22, 2001 and change of address as requested. The file will then be forwarded to the examiner for prompt action on the merits of the claims.

Telephone inquiries relative to this decision should be directed to Special Programs Examiner Kenneth Dorner at (703) 308-0866.

Gerald Goldberg, Director
Patent Technology Center 3600
(703) 308-1134
Facsimile No.: (703) 308-2177

Kjd : 1/25/02

UNITED STATES PATENT AND TRADEMARK OFFICE

Under Secretary of Commerce for Intellectual Property and
Director of the United States Patent and Trademark Office
Washington, D.C. 20231
www.uspto.gov

SEP 2 6 2003
JC35
PATENT & TRADEMARK OFFICE

Paper No.

NIXON PEABODY LLP
8180 GREENSBORO DRIVE SUITE 800
MCLEAN VA 22102

RECEIVED
MAY 2 1 2003
NIXON PEABODY

COPY MAILED

MAY 1 9 2003

OFFICE OF PETITIONS

In re Application of
Shunpei Yamazaki
Application No. 09/499,619
Filed: February 7, 2000
Attorney Docket No. 0756-2095

ON PETITION

This is a decision on the petition, filed May 16, 2003, under 37 CFR 1.313(c)(2) to withdraw the above-identified application from issue after payment of the issue fee.

The petition is **GRANTED**.

The above-identified application is withdrawn from issue for consideration of a submission under 37 CFR 1.114 (request for continued examination). See 37 CFR 1.313(c)(2).

Petitioner is advised that the issue fee paid on March 17, 2003 in the above-identified application cannot be refunded. If, however, the above-identified application is again allowed, petitioner may request that it be applied towards the issue fee required by the new Notice of Allowance.[1]

The instant petition under 37 CFR 1.313(c)(2), the RCE and the IDS, filed on May 16, 2003, are not signed by an attorney of record. However, in accordance with 37 CFR 1.34(a), the signature of Eric J. Robinson appearing on the correspondence shall constitute a representation to the United States Patent and Trademark Office that he is authorized to represent the particular party in whose behalf he act. However, if Mr. Robinson desires to receive correspondence regarding this file, the appropriate power of attorney documentation must be submitted. A courtesy copy of this decision is being mailed to Mr. Robinson, the petitioner herein. Until otherwise instructed, all future correspondence regarding this application file will be directed solely to the above-noted correspondence address of record.

RECEIVED
MAY 2 7 2003
BY: PH 5/27/03.

[1] The request to apply the issue fee to the new Notice may be satisfied by completing and returning the new Issue Fee Transmittal Form PTOL-85(b), which includes the following language thereon: "Commissioner for Patents is requested to apply the Issue Fee and Publication Fee (if any) or re-apply any previously paid issue fee to the application identified above." Petitioner is advised that, whether a fee is indicated as being due or not, the issue Fee Transmittal Form **must** be completed and timely submitted to avoid abandonment. Note the language in bold text on the first page of the Notice of Allowance and Fee(s) Due (PTOL-85).

UNITED STATES PATENT AND TRADEMARK OFFICE

COMMISSIONER FOR PATENTS
UNITED STATES PATENT AND TRADEMARK OFFICE
WASHINGTON, D.C 20231
www.uspto.gov

Paper No. 18

COPY MAILED
OCT 25 2001
OFFICE OF PETITIONS

NIXON PEABODY LLP
8180 GREENSBORO DRIVE SUITE 800
MCLEAN, VA 22102

In re Application of	:	
Shunpei Yamazaki, et al.	:	
Application No. 09/499,619	:	ON PETITION
Filed: February 7, 2000	:	
Attorney Docket No. 740756-2095	:	

This is a decision on the petition under 37 CFR 1.313(c)(2) to withdraw the above-identified application from issue after payment of the issue fee, filed October 24, 2001.

The petition is **GRANTED**.

The above-identified application is withdrawn from issue for consideration of a submission under 37 CFR 1.114 (request for continued examination). See 37 CFR 1.313(c)(2).

Petitioner is advised that the issue fee paid on July 12, 2001, in the above-identified application cannot be refunded. If, however, the above-identified application is again allowed, petitioner may request that it be applied towards the issue fee required by the new Notice of Allowance. [1]

The application is being forwarded to Technology Center 2800 for further processing of the request for continued examination under 37 CFR 1.114.

Sherry D. Brinkley
Petitions Examiner
Office of Petitions
Office of the Deputy Commissioner
for Patent Examination Policy
(703) 305-9220

[1]The request to apply the issue fee to the new Notice must be made in writing and should be accompanied by the new Issue Fee Transmittal Form PTOL-85(b), along with a copy of this decision. Additionally, if the issue fee has increased from the previously paid issue fee, the balance due must be submitted. **Failure to *timely* request *in writing* that the previously paid issue fee be applied towards the new Notice and payment of any balance due will result in the abandonment of the application.**

UNITED STATES PATENT AND TRADEMARK OFFICE

Under Secretary of Commerce for Intellectual Property and
Director of the United States Patent and Trademark Office
Washington, D.C. 20231
www.uspto.gov

Paper No. 10

NIXON PEABODY LLP
8180 GREENSBORO DRIVE SUITE 800
MCLEAN VA 22102

COPY MAILED

MAY 19 2003

OFFICE OF PETITIONS

In re Application of	:	ON PETITION
Shunpei Yamazaki	:	
Application No. 09/499,619	:	
Filed: February 7, 2000	:	
Attorney Docket No. 0756-2095	:	

This is a decision on the petition, filed May 16, 2003, under 37 CFR 1.313(c)(2) to withdraw the above-identified application from issue after payment of the issue fee.

The petition is **GRANTED.**

The above-identified application is withdrawn from issue for consideration of a submission under 37 CFR 1.114 (request for continued examination). See 37 CFR 1.313(c)(2).

Petitioner is advised that the issue fee paid on March 17, 2003 in the above-identified application cannot be refunded. If, however, the above-identified application is again allowed, petitioner may request that it be applied towards the issue fee required by the new Notice of Allowance.[1]

The instant petition under 37 CFR 1.313(c)(2), the RCE and the IDS, filed on May 16, 2003, are not signed by an attorney of record. However, in accordance with 37 CFR 1.34(a), the signature of Eric J. Robinson appearing on the correspondence shall constitute a representation to the United States Patent and Trademark Office that he is authorized to represent the particular party in whose behalf he act. However, if Mr. Robinson desires to receive correspondence regarding this file, the appropriate power of attorney documentation must be submitted. A courtesy copy of this decision is being mailed to Mr. Robinson, the petitioner herein. Until otherwise instructed, all future correspondence regarding this application file will be directed solely to the above-noted correspondence address of record.

---

[1] The request to apply the issue fee to the new Notice may be satisfied by completing and returning the new Issue Fee Transmittal Form PTOL-85(b), which includes the following language thereon: "Commissioner for Patents is requested to apply the Issue Fee and Publication Fee (if any) or re-apply any previously paid issue fee to the application identified above." Petitioner is advised that, whether a fee is indicated as being due or not, the issue Fee Transmittal Form **must** be completed and timely submitted to avoid abandonment. Note the language in bold text on the first page of the Notice of Allowance and Fee(s) Due (PTOL-85).

Telephone inquiries should be directed to the undersigned at (703) 305-8859.

After receipt of the file in the Office of Petitions, the file will be forwarded to Technology Center Art Unit 2814 for processing of the request for continued examination under 37 CFR 1.114 filed May 16, 2003.

Karen Creasy

Karen Creasy
Petitions Examiner
Office of Petitions
Office of the Deputy Commissioner
for Patent Examination Policy

CC:
ERIC J. ROBINSON
ROBINSON INTELLECTUAL PROPERTY LAW OFFICE, P.C.
PMB 955
21010 SOUTHBANK STREET
POTOMAC FALLS VA 20165

UNITED STATES PATENT AND TRADEMARK OFFICE

COMMISSIONER FOR PATENTS
UNITED STATES PATENT AND TRADEMARK OFFICE
P.O. BOX 1450
ALEXANDRIA, VA 22313-1450
www.uspto.gov

Paper No. 19

ROBINSON INTELLECTUAL PROPERTY LAW OFFICE
PMB 955
21010 SOUTHBANK STREET
POTOMAC FALLS, VA 20165

COPY MAILED

OCT 03 2003

OFFICE OF PETITIONS

In re Application of
Shunpei Yamazaki
Application No. 09/499,619
Filed: February 7, 2000
Attorney Docket No. 0756-2095

ON PETITION

This is a decision on the petition under 37 CFR 1.313(c)(2), filed October 1, 2003, to withdraw the above-identified application from issue after payment of the issue fee.

The petition is **GRANTED**.

The above-identified application is withdrawn from issue for consideration of a submission under 37 CFR 1.114 (request for continued examination). See 37 CFR 1.313(c)(2).

Petitioner is advised that the issue fee paid on September 26, 2003, using a Certificate of Mailing under 37 CFR 1.8 dated September 22, 2003, in the above-identified application cannot be refunded. If, however, the above-identified application is again allowed, petitioner may request that it be applied towards the issue fee required by the new Notice of Allowance. [1]

Telephone inquiries relating to this decision should be directed to the undersigned at (703) 305-9220.

After receipt in the Office of Petitions, the application will be forwarded to Technology Center AU 2814 for further processing of the request for continued examination under 37 CFR 1.114.

Sherry D. Brinkley
Petitions Examiner
Office of Petitions
Office of the Deputy Commissioner
for Patent Examination Policy

---

[1] The request to apply the issue fee to the new Notice may be satisfied by completing and returning the new Issue Fee Transmittal Form PTOL-85(b), which includes the following language thereon: "Commissioner for Patents is requested to apply the Issue Fee and Publication Fee (if any) or re-apply any previously paid issue fee to the application identified above." Petitioner is advised that, whether a fee is indicated as being due or not, the Issue Fee Transmittal Form **must** be completed and timely submitted to avoid abandonment. Note the language in bold text on the first page of the Notice of Allowance and Fee(s) Due (PTOL-85).

UNITED STATES PATENT AND TRADEMARK OFFICE

Commissioner for Patents
United States Patent and Trademark Office
P.O. Box 1450
Alexandria, VA 22313-1450
www.uspto.gov

Paper No. 61

ERIC ROBINSON
PMB 955
21010 SOUTHBANK ST.
POTOMAC FALLS, VA 20165

COPY MAILED

APR 27 2004

OFFICE OF PETITIONS

In re Application of :
Shunpei Yamazaki :
Application No. 09/499,619 :
Filed: February 7, 20000 :
Attorney Docket No. 0756-2095 :

ON PETITION

This is a decision on the petition, filed April 26, 2004, under 37 CFR(c)(2) to withdraw the above-identified application from issue after payment of the issue fee.

The petition is **GRANTED**.

The above-identified application is withdrawn from issue for consideration of a submission under 37 CFR 1.114 (request for continued examination). See 37 CFR 1.313(c)(2).

Petitioner is advised that the issue fee paid on January 30, 2004, using a Certificate of Mailing under 37 CFR 1.8 dated January 28, 2004, in the above-identified application cannot be refunded. If, however, the above-identified application is again allowed, petitioner may request that it be applied towards the issue fee required by the new Notice of Allowance. [1]

Telephone inquiries relating to this decision should be directed to the undersigned at (703) 305-9220.

The application is being forwarded to Technology Center AU 2814 for further processing of the request for continued examination under 37 CFR 1.114.

Sherry D. Brinkley
Petitions Examiner
Office of Petitions
Office of the Deputy Commissioner
for Patent Examination Policy

[1]The request to apply the issue fee to the new Notice may be satisfied by completing and returning the new Issue Fee Transmittal Form PTOL-85(b), which includes the following language thereon: "Commissioner for Patents is requested to apply the Issue Fee and Publication Fee (if any) or re-apply any previously paid issue fee to the application identified above." Petitioner is advised that, whether a fee is indicated as being due or not, the Issue Fee Transmittal Form **must** be completed and timely submitted to avoid abandonment. Note the language in bold text on the first page of the Notice of Allowance and Fee(s) Due (PTOL-85).

UNITED STATES PATENT AND TRADEMARK OFFICE

Commissioner for Patents
United States Patent and Trademark Office
P.O. Box 1450
Alexandria, VA 22313-1450
www.uspto.gov

#72

ERIC ROBINSON
PMB 955
21010 SOUTHBANK ST.
POTOMAC FALLS, VA 20165

COPY MAILED

MAY 0 4 2005

OFFICE OF PETITIONS

ON PETITION

In re Application of :
Shunpei Yamazaki :
Application No. 09/499,619 :
Filed: February 7, 2000 :
Attorney Docket No. 0756-2095 :

This is a decision on the petition, filed February 25, 2005, under 37 CFR 1.313(c)(2) to withdraw the above-identified application from issue after payment of the issue fee.

The petition is **GRANTED**.

The above-identified application is withdrawn from issue for consideration of a submission under 37 CFR 1.114 (request for continued examination). See 37 CFR 1.313(c)(2).

Petitioner is advised that the issue fee paid in the above-identified application cannot be refunded. If, however, the above-identified application is again allowed, petitioner may request that it be applied towards the issue fee required by the new Notice of Allowance. [1]

Telephone inquiries relating to this decision should be directed to the undersigned at (571) 272-3204.

The application is being forwarded to Technology Center AU 2814 for further processing of the request for continued examination under 37 CFR 1.114.

Sherry D. Brinkley
Petitions Examiner
Office of Petitions
Office of the Deputy Commissioner
for Patent Examination Policy

[1]The request to apply the issue fee to the new Notice may be satisfied by completing and returning the new Issue Fee Transmittal Form PTOL-85(b), which includes the following language thereon: "Commissioner for Patents is requested to apply the Issue Fee and Publication Fee (if any) or re-apply any previously paid issue fee to the application identified above." Petitioner is advised that, whether a fee is indicated as being due or not, the Issue Fee Transmittal Form must be completed and timely submitted to avoid abandonment. Note the language in bold text on the first page of the Notice of Allowance and Fee(s) Due (PTOL-85).

UNITED STATES PATENT AND TRADEMARK OFFICE

Commissioner for Patents
United States Patent and Trademark Office
P.O. Box 1450
Alexandria, VA 22313-1450
www.uspto.gov

COPY MAILED

NOV 0 3 2009

OFFICE OF PETITIONS

DAVID M QUINLAN, PC
32 NASSAU STREET
SUITE 300
PRINCETON, NJ 08542

In re Patent No. 7,151,756	:	
Issue Date: December 19, 2006	:	
Application No. 09/499,933	:	NOTICE
Filed: February 8, 2000	:	
Attorney Docket No. 11400.1007	:	

This is a notice regarding your request for acceptance of a fee deficiency submission under 37 CFR 1.28. On September 1, 1998, the Court of Appeals for the Federal Circuit held that 37 CFR 1.28(c) is the sole provision governing the time for correction of the erroneous payment of the issue fee as a small entity. **See DH Technology v. Synergystex International, Inc. 154 F.3d 1333, 47 USPQ2d 1865 (Fed. Cir. Sept. 1, 1998).**

The Office no longer investigates or rejects original or reissue applications under 37 CFR 1.56. **1098 Off. Gaz. Pat. Office 502 (January 3, 1989)**. Therefore, nothing in this Notice is intended to imply that an investigation was done.

Your fee deficiency submission under 37 CFR 1.28 is hereby **ACCEPTED**.

This application is no longer entitled to small entity status. Accordingly, all future fees paid in this application must be paid at the large entity rate.

Inquiries related to this communication should be directed to the April M. Wise at (571) 272-1642.

/Carl Friedman/
Carl Friedman
Petitions Examiner
Office of Petitions

UNITED STATES PATENT AND TRADEMARK OFFICE

Under Secretary of Commerce for Intellectual Property and
Director of the United States Patent and Trademark Office
Washington, D.C. 20231
www.uspto.gov

Paper No.

MORGAN & FINNEGAN, L.L.P.
345 PARK AVENUE
22 FLOOR
NEW YORK NY 10154

COPY MAILED

FEB 12 2003

OFFICE OF PETITIONS

ON PETITION

In re Application of :
Pierre Albou :
Application No. 09/499,984 :
Filed: February 8, 2000 :
Attorney Docket No. 1948-4665 :

This is a decision on the petition, filed February 10, 2003, under 37 CFR 1.313(c)(2) to withdraw the above-identified application from issue after payment of the issue fee.

The petition is **GRANTED**.

The above-identified application is withdrawn from issue for consideration of a submission under 37 CFR 1.114 (request for continued examination). See 37 CFR 1.313(c)(2).

Petitioner is advised that the issue fee paid on November 12, 2002 in the above-identified application cannot be refunded. If, however, the above-identified application is again allowed, petitioner may request that it be applied towards the issue fee required by the new Notice of Allowance.[1]

Telephone inquiries should be directed to the undersigned at (703) 305-8859.

Karen Creasy

Karen Creasy
Petitions Examiner
Office of Petitions
Office of the Deputy Commissioner
for Patent Examination Policy

---

[1] The request to apply the issue fee to the new Notice may be satisfied by completing and returning the new Issue Fee Transmittal Form PTOL-85(b), which includes the following language thereon: "Commissioner for Patents is requested to apply the Issue Fee and Publication Fee (if any) or re-apply any previously paid issue fee to the application identified above." Petitioner is advised that, whether a fee is indicated as being due or not, the Issue Fee Transmittal Form **must** be completed timely submitted to avoid abandonment. Note the language in bold text on the face of the Notice of Allowance and Fee(s) Due (PTOL-85).

UNITED STATES PATENT AND TRADEMARK OFFICE

COMMISSIONER FOR PATENTS
UNITED STATES PATENT AND TRADEMARK OFFICE
P.O. BOX 1450
ALEXANDRIA, VA 22313-1450
WWW.USPTO.GOV

Paper No. 14

WITHROW & TERRANOVA, P.L.L.C.
P.O. BOX 1287
CARY NC 27512

COPY MAILED
MAY 15 2003
OFFICE OF PETITIONS

In re Application of
Russel D. Leatherman et al.
Application No. 09/500,094
Filed: February 8, 2000
Attorney Docket No. 2400-505

DECISION GRANTING
PETITION

This is a decision on the paper titled "Petition under 37 C.F.R. § 1.47(a) and 37 C.F.R. § 1.131(a) to Accept Declaration under 37 C.F.R. § 1.131 without Signature of Russel D. Leatherman," filed March 24, 2003, which is being treated as a § 1.183 waiver of § 1.131's requirement that all of the inventors sign the declaration of prior inventorship.[1]

The petition under 37 CFR 1.183 is **GRANTED**.

The above-identified application was filed on February 8, 2000. At the time of filing, applicants submitted a 37 CFR 1.63 declaration from a prior application signed by all of the inventors. Non-final Office actions were mailed September 27, 2001 and May 7, 2002. A final Office Action was mailed on November 8, 2002. This office action set a shortened statutory period for reply of three months, with extensions of time obtainable under 37 CFR 1.136(a).

In response, on March 24, 2003, applicants submitted an Request for Continued Examination (RCE) in response, including a declaration under 37 CFR 1.131. This reply was made timely by an accompanying petition and fee for extension of time for response within the second month. The 37 CFR 1.131 declaration states that all of the inventors were responsible for reduction to practice of the subject matter of the rejected claims prior to the date of the reference on which the November 8, 2002 rejection was based. The 37 CFR 1.131 declaration was signed by all of the joint inventors, except inventor Leatherman. Applicant has filed the instant petition to have the 37 CFR 1.131 declaration entered despite the fact that the declaration was not signed by joint inventor Leatherman. Petitioner asserts that inventor Leatherman is either unwilling or unavailable to execute the declaration.

37 CFR 1.131 states, in pertinent part:

When any claim of an application or a patent under reexamination is rejected, the **inventor** of the subject matter of the rejected claim, the owner of the patent under reexamination, or the party qualified under §§ 1.42, 1.43, or 1.47, may submit an

[1] 37 CFR 1.47 only applies when an inventor refuses to sign the original 37 CFR 1.63 oath or declaration.

appropriate oath or declaration to establish invention of the subject matter of the rejected claim prior to the effective date of the reference or activity on which the rejection is based.[2]

In addition, the Manual of Patent Examining Procedure states that "an application or declaration by less than all named inventors of an application is accepted where it is shown that less than all named inventors of an application invented the subject matter of the claim or claims under rejection."[3]

Here, there has not been a party qualified under 37 CFR 1.42, 1.43, or 1.47. In addition, applicants do not contend that less than all of the named inventors of the application invented the subject matter of the claims under rejection. Accordingly, the proper parties to sign the 37 CFR 1.131 declaration include all of the joint inventors.

In order for a petition under 37 CFR 1.183 to be granted to waive this requirement that joint inventor Leatherman sign the § 1.131 declaration, petitioner must demonstrate that this is an extraordinary situation where justice requires waiver of the rules.

On instant petition, applicants have set forth the steps taken to obtain joint inventor Leatherman's signature on the § 1.131 declaration. Applicants have shown that a *bona fide* effort was made to present the § 1.131 declaration and supporting documentation to inventor Leatherman for signature, to reach inventor Leatherman by email to discuss his failure to execute the declaration, and that by his conduct, inventor Leatherman has refused to execute the declaration. The declaration presented is signed by joint inventor Royal. Under the circumstances, it is concluded that petitioner has demonstrated that this is an extraordinary situation requiring waiver of the rules.

The 37 CFR 1.131 declaration may be entered, despite the fact that its requirement that all of the inventors sign the declaration has not been satisfied.

The application file is being forwarded to Technology Center 3600 for consideration on the merits of the reply and the 37 CFR 1.131 declaration, filed March 24, 2003.

Telephone inquiries concerning this decision should be directed to the undersigned Petitions Attorney at (703) 305-4497.

Patricia Faison-Ball

Patricia Faison-Ball
Senior Petitions Attorney
Office of Petitions

---

[2] 37 CFR 1.131(a) (emphasis added).

[3] MPEP 715.04.

UNITED STATES PATENT AND TRADEMARK OFFICE

UNITED STATES DEPARTMENT OF COMMERCE
United States Patent and Trademark Office
Address: COMMISSIONER FOR PATENTS
P.O. Box 1450
Alexandria, Virginia 22313-1450
www.uspto.gov

KENYON & KENYON LLP
1500 K STREET N.W.
SUITE 700
WASHINGTON, DC 20005

Mail Date: 04/23/2010

Applicant	: Kiyoshi Iseki	: DECISION ON REQUEST FOR
Patent Number	: 7666490	: RECALCULATION of PATENT
Issue Date	: 02/23/2010	: TERM ADJUSTMENT IN VIEW
Appliction No	: 09/500,132	: OF WYETH
Filed	: 02/08/2000	:
		:

The Patentee's Request for Recalculation is **DISMISSED.**

This Request is deemed ineligible for consideration for one or more of the following reasons:

(A). The patent for which PTA recalculation is requested is either a design or reissue application or is a reexamination proceeding;

(B). The patent for which PTA recalculation is requested resulted from a utility or plant application filed under 35 USC 111(a) before May 29, 2000 and no CPA filed in the application on/after May 29, 2000;

(C). The patent for which PTA recalculation is requested resulted from an international application in which the international filing date was before May 29, 2000 and no CPA filed in the application on/after May 29, 2000;

(D). The patent for which PTA recalculation is requested issued on/after March 2, 2010;

(E). The Request for Recalculation was filed more than 180 days after the grant date of the patent and the request was not filed within two months of a dismissal of a request for reconsideration of the of the patent term under 37 CFR 1.705(d);

(F). The Request for Recalculation is not solely limited to USPTO pre-Wyeth interpretation of 35 U.S.C. 154(b)(2)(A);

or

(G). A civil action was filed pursuant to 35 U.S.C. 154(b)(4)(A)concerning the same patent at issue in this request.

Patentee may file a reply to this decision dismissing the Request for Recalculation. Patentee must file such reply within one month or thirty days, whichever is longer, of the mail date of the decision dismissing the Request for Recalculation. No fee is required if patentee is asserting in the reply that the dismissal for ineligibility is improper.

Patentee should use document code PET.OP if electronically filing a reply to this dismissal. If the USPTO finds that the request was improperly deemed ineligible, the USPTO will mail applicant a recalculation determination.

Patentee should be aware that in order to preserve the right to review in the United States District Court for the District of Columbia of the USPTO patent term adjustment determination, patentee must ensure that he or she also take the steps required under 35 U.S.C. 154(b)(4)(A). Nothing in the request for recalculation should be construed as providing an alternative time frame for commencing a civil action under 35 U.S.C. 154 (b)(4)(A).

Any questions concerning this decision should be directed to the Office of Patent Legal Administration at 571-272-7702.

The opinion in support of the decision being entered today was not written for publication in a law journal and is not binding precedent of the Board.

Paper No. 14

UNITED STATES PATENT AND TRADEMARK OFFICE

BEFORE THE BOARD OF PATENT APPEALS
AND INTERFERENCES

Ex parte JoAnn Ruvolo

Application No. 09/500,439

ORDER RETURNING UNDOCKETED APPEAL TO EXAMINER

MAILED
NOV 1 0 2003
U.S. PATENT AND TRADEMARK OFFICE
BOARD OF PATENT APPEALS
AND INTERFERENCES

This application was received at the Board of Patent Appeals and Interferences on September 22, 2003. A review of the application has revealed that the application is not ready for docketing as an appeal. Accordingly, the application is herewith being returned to the examiner. The matters requiring attention prior to docketing are identified below.

Regarding the 103(a) rejection for Claim 5-8, 18-20 and 29-32. The Examiner's Answer dated July 2, 2003 (page 5) relies on

a reference to Cameron (5,737,726) to maintain the 103(a) rejection for claims 5-8, 18-20 and 29-32. However, on page 10 of the Examiner's Answer, the examiner states in paragraph 3, that the:

> ". . .[T]he Final office action never used Cameron U.S. Patent No. 5,737,726 as a reference. There was a typographical error on page 5, which mentioned, "U.S. Patent 5,737,726," but the duration of the Final office action and the Notice of Reference Cited clearly establishes the use of only Xcontact and Kennedy U.S. of only Xcontact and Kennedy U.S. Patent. . . and was subsequently removed in the Examiner's Second office action non-final. . . ."

Clarification of the 103(a) rejection for Claim 5-8, 18-20 and 29-32 and specifically how the Cameron reference (Patent 5,737,726) is being applied in this rejection is required.

Further, an Information Disclosure Statement (hereinafter IDS) was filed February 9, 2000 (Paper No. 2). The Information Disclosure Form 1449 has not been signed by the examiner.

Accordingly, it is

Ordered that the application is returned to the examiner to:

- Supply a revised Examiner's Answer's to clarify the 103(a) rejection to claims 5-8, 18-20 and 29-32 with regard to the deletion of the Cameron reference (Patent 5,737,726) being applied to this rejection.
- For consideration of the Form 1449, Information

Disclosure Statement, dated February 9, 2000.

- For any further action as deemed appropriate.

It is important that the Board of Patent Appeals and Interferences be informed promptly of any action affecting the appeal (i.e., abandonment, issue, reopening prosecution).

BOARD OF PATENT APPEALS
AND INTERFERENCES

CRAIG R. FEINBERG
PROGRAM AND RESOURCE ADMINISTRATOR
(703)308-9797

CFR/dpv
RA04-0081

Application No. 09/500,439

LACASSE & ASSOCATES, LLC
1725 DUKE STREET
SUITE 650
ALEXANDRIA, VA 22314

UNITED STATES PATENT AND TRADEMARK OFFICE

COMMISSIONER FOR PATENTS
UNITED STATES PATENT AND TRADEMARK OFFICE
WASHINGTON, D.C. 20231
www.uspto.gov

Paper No. 14

In re Application of
Steven M. Lloyd et al.
Application No. 09/500,460
Filed: February 9, 2000
Attorney Docket No. TPP 30555A

: DECISION GRANTING PETITION
: TO RESET PERIOD FOR REPLY

This is a decision on the petition filed on February 22, 2002, requesting that the shortened statutory period for reply set forth in the Office communication mailed on December 13, 2001 be reset to run from the date on which the Office communication was actually received at the correspondence address of record.

The petition is granted.

Petitioner provided a statement that the Office communication in question was received at the correspondence address of record on February 20, 2002. The petition was filed within two weeks of receipt of the Office communication. A substantial portion of the set reply period had elapsed on the date of receipt. Furthermore, the Office communication was mailed between October 13, 2001 and January 2, 2002, when delivery of mail from the Office to certain regions of the country was delayed.

Accordingly, the shortened statutory period that was originally set forth in the Office communication originally mailed on December 13, 2001is hereby reset to run FROM THE RECEIPT DATE OF February 20, 2002.

David W. Wu,
Supervisory Patent Examiner
Technology Center 1700
703-308-2450

Thomas P. Pavelko
STEVENS, DAVIS, MILLER & MOSHER, L.L.P.
1615 L. Street, N.W., Suite 850
Washington, D.C. 20036

UNITED STATES PATENT AND TRADEMARK OFFICE

COMMISSIONER FOR PATENTS
UNITED STATES PATENT AND TRADEMARK OFFICE
P.O. BOX 1450
ALEXANDRIA, VA 22313-1450
WWW.USPTO.GOV

Paper No. 10

COPY MAILED

AUG 1 8 2003

OFFICE OF PETITIONS

LARIVIERE, GRUBMAN & PAYNE, LLP
1 LOWER RAGSDALE, BLDG. 1, SUITE 130
P.O. BOX 3140
MONTEREY, CA 93942

In re Application of
Cailloux, et al.
Application No. 09/500,702
Filed: February 9, 2000
Attorney Docket No. 17356-703

ON PETITION

This is a decision on the petition under 37 CFR 1.137(a), filed July 29, 2003, to revive the above-identified application.

The petition is **GRANTED.**

This application became abandoned for failure to file a timely reply to non-final Office action mailed April 18, 2002, which set a three (3) month statutory period for reply. No response was received within the allowable period and the application became abandoned on July 19, 2002. A Notice of Abandonment was mailed July 30, 2003.

The response filed July 29, 2003, is noted and made of record.

The file is now being forwarded to Technology Center 2600 for further processing.

Telephone inquiries concerning this matter may be directed to the undersigned at (703) 305-0010

Kenya A. McLaughlin
Petitions Attorney
Office of Petitions

UNITED STATES PATENT AND TRADEMARK OFFICE

COMMISSIONER FOR PATENTS
UNITED STATES PATENT AND TRADEMARK OFFICE
WASHINGTON, D.C. 20231
www.uspto.gov

Paper No. 11

PILLSBURY WINTHROP
1600 TYSONS BOULEVARD
McLEAN, VA 22102

COPY MAILED

JAN 24 2003

OFFICE OF PETITIONS

In re Application of :
Srinivasan K. Ganapathi :
Application No. 09/500,706 :
Filed: February 9, 2000 :
Attorney Docket No. 61450/0261860 :

ON PETITION

This is a decision on the petition under 37 CFR 1.137(b), filed January 16, 2003, to revive the above-identified application.

The petition is **GRANTED**.

The above-identified application became abandoned for failure to reply in a timely manner to the non-final Office action mailed March 13, 2002, which set a shortened statutory period for reply of three (3) months. No extensions of time under the provisions of 37 CFR 1.136(a) were obtained. Accordingly, the above-identified application became abandoned on June 14, 2002.

37 CFR 1.137(b)(3) requires a statement that the entire delay in filing the required reply from the due date for the reply until the filing of a grantable petition pursuant to 37 CFR 1.137(b) was unintentional. If the statement contained in the instant petition varies from the language required by 37 CFR 1.137(b)(3), the statement contained in the instant petition is being construed as the statement required by 37 CFR 1.137(b)(3) and petitioner must notify the Office if this is **not** a correct interpretation of the statement contained in the instant petition.

The Change of Correspondence Address filed January 16, 2003 is noted and made of record.

Pursuant to petitioner's authorization, Deposit Account No. 03-3975 was charged $650.00 for the petition to revive an unintentionally abandoned application.

Telephone inquiries concerning this decision should be directed to Wan Laymon at (703) 305-9282.

The application file is being forwarded to Technology Center AU 2855.

Wan Laymon
Petitions Examiner
Office of Petitions
Office of the Deputy Commissioner
for Patent Examination Policy

UNITED STATES PATENT AND TRADEMARK OFFICE

Commissioner for Patents
United States Patent and Trademark Office
P.O. Box 1450
Alexandria, VA 22313-1450
www.uspto.gov

LAW OFFICES OF IMAM & ASSOCIATES
111 NORTH MARKET STREET, SUITE 1010
SAN JOSE, CA 95113

COPY MAILED

MAR 16 2006

OFFICE OF PETITIONS

In re Application of	:
Mehdi Asnaashari	: DECISION ON PETITION UNDER
Application No. 09/500,755	: 37 CFR 1.313(a)
Filed: February 8, 2000	:
Atty Dkt No. 38979-71US	:

This is a decision on the petition under 37 CFR 1.313(a), filed March 13, 2006, requesting withdrawal of the above-identified application from issue.

The petition is **dismissed** as moot for the reasons stated below.

A review of the file record discloses that a Notice of Allowance was mailed on December 19, 2005, with the issue fee being due on or before March 20, 2006. There is no indication that the issue fee has to date been paid.

The filing of a petition under 37 CFR 1.313(a) is unnecessary, since the mere filing of an RCE and submission will effectively withdraw an application from issue prior to payment of the issue fee. In view thereof, the petition to withdraw from issue is dismissed as involving a moot issue. *Note* MPEP 706.07(h)(IX).

Inquiries concerning this decision may be directed to the undersigned at (571) 272-3218.

The matter is being referred to Technology Center AU 2612 for appropriate processing of the RCE filed March 13, 2006, and for consideration of the concurrently filed Information Disclosure Statement.

Frances Hicks
Petitions Examiner
Office of Petitions

UNITED STATES PATENT AND TRADEMARK OFFICE

Commissioner for Patents
United States Patent and Trademark Office
P.O. Box 1450
Alexandria, VA 22313-1450
www.uspto.gov

In re Patent No. 6398812
Issue Date: June 4,2002
Application No. 09500827
Filed: February 10,2000
Attorney Docket No. MED-04602/29

:
:DECISION GRANTING PETITION
:UNDER 37 CFR 1.378(c)
:

This is a decision on the electronic petition, filed May 9,2007 ,under 37 CFR 1.378(c) to accept the unintentionally delayed payment of the 3.5 year maintenance fee for the above-identified patent.

The petition is GRANTED.

The maintenance fee is accepted, and the above-identified patent reinstated as of May 9,2007 . This decision also constitutes notice that the fee has been accepted. An electronic copy of the petition and this decision has been created as an entry in an Image File Wrapper. Nevertheless, petitioner should print and retain an independent copy

Telephone inquires related to this electronic decision should be directed to the Electronic Business Center at 1-866-217-9197.

Approved for use through 04/30/2009. OMB 0651-0016
U.S. Patent and Trademark Office: U.S. DEPARTMENT OF COMMERCE
Under the Paperwork Reduction Act of 1995, no persons are required to respond to a collection of information unless it displays valid OMB control number.

PETITION TO ACCEPT UNINTENTIONALLY DELAYED PAYMENT OF MAINTENANCE FEE IN AN EXPIRED PATENT (37 CFR 1.378(c))

Patent Number	Issue Date (YYYY-MM-DD)	Application Number	Filing Date (YYYY-MM-DD)	Docket Number (if applicable)
6,398,812	2002-06-04	09/500,827	2000-02-10	DPY-10102/29

CAUTION: Maintenance fee (and surcharge, if any) payment must correctly identify: (1) the patent number and (2) the application number of the actual U.S. application leading to issuance of that patent to ensure the fee(s) is/are associated with the correct patent. 37 CFR 1.366(c) and (d).

SMALL ENTITY
☐ Patentee claims, or has previously claimed, small entity status. See 37 CFR 1.27.

LOSS OF ENTITLEMENT TO SMALL ENTITY STATUS
☐ Patentee is no longer entitled to small entity status. See 37 CFR 1.27(g)

NOT Small Entity		Small Entity	
Fee	Code	Fee	Code
◉ 3 ½ year	(1551)	○ 3 ½ year	(2551)
○ 7 ½ year	(1552)	○ 7 ½ year	(2552)
○ 11 ½ year	(1553)	○ 11 ½ year	(2553)

SURCHARGE
The surcharge required by 37 CFR 1.20(i)(2) (Fee Code 1558) must be paid as a condition of accepting unintentionally delayed payment of the maintenance fee.

MAINTENANCE FEE (37 CFR 1.20(e)-(g))
The appropriate maintenance fee must be submitted with this petition.

STATEMENT
THE UNDERSIGNED CERTIFIES THAT THE DELAY IN PAYMENT OF THE MAINTENANCE FEE TO THIS PATENT WAS UNINTENTIONAL

PETITIONER(S) REQUEST THAT THE DELAYED PAYMENT OF THE MAINTENANCE FEE BE ACCEPTED AND THE PATENT REINSTATED

THIS PORTION MUST BE COMPLETED BY THE SIGNATORY OR SIGNATORIES

37 CFR 1.378(d) states: "Any petition under this section must be signed by an attorney or agent registered to practice before the Patent and Trademark Office, or by the patentee, the assignee, or other party in interest."

I certify, in accordance with 37 CFR 1.4(d)(4) that I am

◉ An attorney or agent registered to practice before the Patent and Trademark Office

○ A sole patentee

○ A joint patentee; I certify that I am authorized to sign this submission on behalf of all the other patentees.

○ A joint patentee; all of whom are signing this e-petition

○ The assignee of record of the entire interest

Patent Practitioner			
A signature of the applicant or representative is required in accordance with 37 CFR 1.33 and 10.18. Please see 37 CFR 1.4(d) for the form of the signature			
Signature	/John G. Posa/	Date (YYYY-MM-DD)	2007-05-09
Name	John G. Posa	Registration Number	37424

This collection of information is required by 37 CFR 1.378(c). The information is required to obtain or retain a benefit by the public which is to file (and by the USPTO to process) an application. Confidentiality is governed by 35 U.S.C. 122 and 37 CFR 1.11 and 1.14. This collection is estimated to take 1 hour to complete, including gathering, preparing, and submitting the completed application form to the USPTO. Time will vary depending upon the individual case. Any comments on the amount of time you require to complete this form and/ or suggestions for reducing this burden, should be sent to the Chief Information Officer, U.S. Patent and Trademark Office, U.S. Department of Commerce, P.O. Box 1450, Alexandria, VA 22313-1450. DO NOT SEND FEES OR COMPLETED FORMS TO THIS ADDRESS. **This form can only be used when in conjunction with EFS-Web. If this form is mailed to the USPTO, it may cause delays in reinstating the patent.**

Privacy Act Statement

The Privacy Act of 1974 (P.L. 93-579) requires that you be given certain information in connection with your submission of the attached form related to a patent application or patent. Accordingly, pursuant to the requirements of the Act, please be advised that: (1) the general authority for the collection of this information is 35 U.S.C. 2(b)(2); (2) furnishing of the information solicited is voluntary; and (3) the principal purpose for which the information is used by the U.S. Patent and Trademark Office is to process and/or examine your submission related to a patent application or patent. If you do not furnish the requested information, the U.S. Patent and Trademark Office may not be able to process and/or examine your submission, which may result in termination of proceedings or abandonment of the application or expiration of the patent.

The information provided by you in this form will be subject to the following routine uses:

1. The information on this form will be treated confidentially to the extent allowed under the Freedom of Information Act (5 U.S.C. 552) and the Privacy Act (5 U.S.C. 552a). Records from this system of records may be disclosed to the Department of Justice to determine whether the Freedom of Information Act requires disclosure of these record s.

2. A record from this system of records may be disclosed, as a routine use, in the course of presenting evidence to a court, magistrate, or administrative tribunal, including disclosures to opposing counsel in the course of settlement negotiations.

3. A record in this system of records may be disclosed, as a routine use, to a Member of Congress submitting a request involving an individual, to whom the record pertains, when the individual has requested assistance from the Member with respect to the subject matter of the record.

4. A record in this system of records may be disclosed, as a routine use, to a contractor of the Agency having need for the information in order to perform a contract. Recipients of information shall be required to comply with the requirements of the Privacy Act of 1974, as amended, pursuant to 5 U.S.C. 552a(m).

5. A record related to an International Application filed under the Patent Cooperation Treaty in this system of records may be disclosed, as a routine use, to the International Bureau of the World Intellectual Property Organization, pursuant to the Patent Cooperation Treaty.

6. A record in this system of records may be disclosed, as a routine use, to another federal agency for purposes of National Security review (35 U.S.C. 181) and for review pursuant to the Atomic Energy Act (42 U.S.C. 218(c)).

7. A record from this system of records may be disclosed, as a routine use, to the Administrator, General Services, or his/her designee, during an inspection of records conducted by GSA as part of that agency's responsibility to recommend improvements in records management practices and programs, under authority of 44 U.S.C. 2904 and 2906. Such disclosure shall be made in accordance with the GSA regulations governing inspection of records for this purpose, and any other relevant (i.e., GSA or Commerce) directive. Such disclosure shall not be used to make determinations about individuals.

8. A record from this system of records may be disclosed, as a routine use, to the public after either publication of the application pursuant to 35 U.S.C. 122(b) or issuance of a patent pursuant to 35 U.S.C. 151. Further, a record may be disclosed, subject to the limitations of 37 CFR 1.14, as a routine use, to the public if the record was filed in an application which became abandoned or in which the proceedings were terminated and which application is referenced by either a published application, an application open to public inspections or an issued patent.

9. A record from this system of records may be disclosed, as a routine use, to a Federal, State, or local law enforcement agency, if the USPTO becomes aware of a violation or potential violation of law or regulation.

UNITED STATES
PATENT AND
TRADEMARK OFFICE

UNDER SECRETARY OF COMMERCE FOR INTELLECTUAL PROPERTY
AND DIRECTOR OF THE UNITED STATES PATENT AND TRADEMARK OFFICE
WASHINGTON, D.C. 20231
WWW.USPTO.GOV

FEB 12 2002

#24

PATREA L. PABST
HOLLAND & KNIGHT LLP
ONE ATLANTIC CENTER
1201 WEST PEACHTREE STREET, SUITE 2000
ATLANTA GA 30309-3400

In re Application of	:
John B. Harley et al	:
Serial No.: 09/500,904	: WITHDRAWAL OF ABANDONMENT
Filed: February 9, 2000	:
Attorney Docket No.: OMRF 161 CIP	: :

This is in response to applicants' petition under 37 CFR 1.181, filed December 27, 2001, requesting revival of the above-identified application based on the filing of a proper and timely response.

BACKGROUND

A review of the file history shows the examiner mailed an Office action to applicants on December 28, 2000, setting a three month shortened statutory period for reply. Applicants filed a first reply to the Office action on July 5, 2001 (Certificate of Mailing dated June 28, 2001), with a three month extension of time request and fee. The reply included an amendment to the claims and specification. In a Notice of Non-compliant Amendment, mailed July 12, 2001, the Office stated that the amendments to the specification were not in proper form according to 37 CFR 1.121(b)(1)(ii) and (iii). Applicants indicated in the specification that Figures 9-11 were to be deleted, and apparently meaning the text portion of the specification referring to these figures was to be deleted also. However, this was not clearly stated. Applicants provided unnumbered clean copies of the affected pages of the specification incorporating the deletions. 37 CFR 1.121(b)(1)(ii) and (iii) require, respectively, a clean version of the paragraph of the specification which is to be amended and a marked up version of the paragraph showing the changes being made. In the instance where an entire paragraph is being deleted, direction to "cancel the paragraph at page xx, lines yy-zz" is sufficient. With respect to the paragraphs describing Figures 9-11, such direction would have been sufficient, but was not clearly stated in the amendment. Amendments to other paragraphs required presentation of a clean copy and marked up version showing the changes with directions to "replace the paragraph on page xx, line yy-zz with the amended paragraph". The portion of the amendment directed to the claims, however, was proper and was entered.

In reply to the letter of non-compliance, received August 10, 2001, applicants provided a new copy of the amendments to the specification which showed the numbered pages with the deleted portions bracketed and struck through for each page on which an amendment appeared. In addition, numbered clean copy pages were provided for all affected pages. However, the amendment was deemed to not fully (and rigidly) follow 37 CFR 1.121(b)(1) and a second Notice of Non-compliant Amendment was mailed to applicants on August 24, 2001. In neither instance was any explanation given applicants as to the nature of non-compliance other than to check the boxes on the preprinted form citing the rule and averring non-compliance. Applicants replied on December 7, 2001, by facsimile (original Certificate of Mailing dated October 24, 2001) (the original was subsequently received on January 8, 2002) with a request and fee for an extension of time providing again copies of the previously submitted amendments in the same form and a substitute specification. A Notice of Abandonment was mailed to applicants on December 19, 2001, indicating the case was being held abandoned since applicants had not filed a compliant amendment although offered several opportunities to do so. This petition to withdraw the abandonment was then filed on December 27, 2001.

DISCUSSION

It is clear that applicants attempted to comply with 37 CFR 1.121(b)(1), but failed to meet the letter of the rule. It is clear that applicants' amendment to the specification first submitted on June 28, 2001, were improper and not in compliance with the rule. However the amendment filed August 24, 2001, complied with the intent of the rule although the letter of the rule was not fully complied with. By submitting copies of existing pages with the portions to be deleted both bracketed and struck through applicants showed clearly the matter to be deleted as required by 37 CFR 1.121(b)(1)(iii). However, only those paragraphs actually being amended, not the entire page, should have been submitted and identified by page and line numbers. In addition, those paragraphs being deleted in their entirety need only have been referred to and not shown by bracketing and strike through. In order to comply with 37 CFR 1.121(b)(1)(ii) clean copies of the amended paragraphs, not entire pages, should have been submitted. However, since section (2) of the rule also refers to replacement of "sections" of the specification, and a page or consecutive pages of the specification can be considered a "section" of the specification applicants' submission of a full page clean copy of the specification with the changes incorporated therein is considered to meet this portion of the rule. The submission of a substitute specification, while unnecessary in this instance, would also have been considered to comply with the rule if it had been accompanied by a statement stating that no new matted had been added.

In view of applicants' efforts to comply with 37 CFR 1.121 in multiple ways, the Notice of Abandonment is hereby withdrawn and the application restored to pending status with the mailing of this decision.

Applicants' petition is **GRANTED**.

The application will be forwarded for proper entry of the amendments submitted, but not the substitute specification.

The application will then be forwarded to the examiner for further consideration not inconsistent with this decision.

Should there be any questions with respect to this decision, please contact William R. Dixon, Jr., by mail addressed to Director, Technology Center 1600, Washington, D.C. 20231, or by telephone at (703) 308-3824 or by facsimile transmission at (703) 305-7230.

Bruce M. Kisliuk
Director, Technology Center 1600

SPE RESPONSE FOR CERTIFICATE OF CORRECTION

Paper No.: X

DATE : November 08,2007

TO SPE OF : ART UNIT 1648

SUBJECT : Request for Certificate of Correction for Appl. No.: 09/500,904 Patent No.: 7273613 B1

A response is requested with respect to a request for a certificate of correction.

With respect to the change(s) requested to correct Office and/or Applicant's errors, should the patent read as shown in the certificate of correction attached herewith or the COCIN document(s), in IFW images for the above-identified patented application? No new matter should be introduced, nor should the scope or meaning of the claims be changed.

If the response is for an IFW, within **7** days, please complete and forward the response, to the employee (named below) via scanning into application images, using document code **COCX**.

DO NOT SENT TO ATTORNEY

If the response is for a paper file wrapper, please complete the response and forward the response with the paper file wrapper, to the employee (named below), within **7** days, to:

Certificates of Correction Branch (CofC)
South Tower - 9A22
Palm Location 7580

You can fax the Directors/SPE response to 571-270-9990

LAMONTE NEWSOME

Certificates of Correction Branch

703-308-9390 ext. 112

Thank You For Your Assistance

The request for issuing the above-identified correction(s) is hereby:

Note your decision on the appropriate box.

- ☒ **Approved** — **All** changes apply.
- ☐ **Approved in Part** — Specify below which changes **do not** apply.
- ☐ **Denied** — State the reasons for denial below.

Comments: _____

BRUCE R. CAMPELL, PH.D
SUPERVISORY PATENT EXAMINER
TECHNOLOGY CENTER 1600

B. R. Campell 1648

UNITED STATES PATENT AND TRADEMARK OFFICE

Commissioner for Patents
United States Patent and Trademark Office
P.O. Box 1450
Alexandria, VA 22313-1450
www.uspto.gov

FULBRIGHT & JAWORSKI LLP
600 CONGRESS AVE
SUITE 2400
AUSTIN TX 78701

COPY MAILED

MAY 09 2008

OFFICE OF PETITIONS

In re Patent No. 7,273,613	:	
Issue Date: September 25, 2007	:	
Application No. 09/500,904	:	DECISION ON PETITION
Filed: February 9, 2000	:	
Attorney Docket No. OMRF:051US	:	

This is a decision on the "PETITION UNDER 37 C.F.R. 3.81(b) TO CORRECT ASSIGNEE IN ISSUED PATENT", filed October 19, 2007.

The petition is **GRANTED**.

An application may issue in the name of an assignee rather than the applicant if requested prior to issuance of a patent.[1] However, in the event the request is not made prior to issuance, a Certificate of Correction under 37 CFR 1.323 may be requested. A request for a Certificate of Correction under 37 CFR 1.323 to correct the assignee's name will not be granted unless a petition under 37 CFR 3.81(b) is granted. Such request under 37 CFR 3.81(b) should include:

(A) the processing fee required by 37 CFR 1.17(i);

(B) a request for issuance of the application in the name of the assignee, or a request that a patent be corrected to state the name of the assignee;

---

[1] See 37 CFR 3.81.

(C) a statement that the assignment was submitted for recordation as set forth in 37 CFR 3.11 before issuance of the patent; and

(D) a request for a certificate of correction under 37 CFR 1.323 accompanied by the fee set forth in 37 CFR 1.20(a).[2]

Receipt of the $130 processing fee set forth in 37 CFR 1.17(i) and the $100 fee for the Certificate of Correction is acknowledged.

The file is being forwarded to the Certificate of Corrections Branch for issuance of the requested Certificate of Correction.

Telephone inquiries related to this decision should be directed to the undersigned at (571)272-3207.

Cliff Congo
Petitions Attorney
Office of Petitions

[2] MPEP 307.

Newsome, Lamonte

From: Myhre, James
Sent: Tuesday, May 12, 2009 5:19 AM
To: Newsome, Lamonte
Subject: IFW-PTOL-306 Certificate of Correction

Here is the requested Certificate of Correction for Patent [redacted] 09/501,053

SPE RESPONSE FOR CERTIFICATE OF CORRECTION

Paper No.:20090401

DATE : May 12, 2009

TO SPE OF : ART UNIT 3688

SUBJECT : Request for Certificate of Correction on Patent No.: 6587835

A response is requested with respect to the accompanying request for a certificate of correction.

Please complete this form and return with file, within **7** days to:
Certificates of Correction Branch - PK 3-910
Palm location **7590** - Tel. No. 305-8201

With respect to the change(s) requested, correcting Office and/or Applicant's errors, should the patent read as shown in the certificate of correction? No new matter should be introduced, nor should the scope or meaning of the claims be changed.

Thank You For Your Assistance **Certificates of Correction Branch**

The request for issuing the above-identified correction(s) is hereby:
Note your decision on the appropriate box.

Approved **All** changes apply.

Approved in Part Specify below which changes **do not** apply.

Denied State the reasons for denial below.

Comments:

The requested corrections do not change the scope of the claims nor do they introduce new matter, but merely correct a prior antecedent basis problem in the two amended claims.

Unit 3688

SPE: /James W. Myhre/ **Art**

PTOL-306 (Rev. 7/03) U.S. DEPARTMENT OF COMMERCE Patent and Trademark Office

UNITED STATES PATENT AND TRADEMARK OFFICE

COMMISSIONER FOR PATENTS
UNITED STATES PATENT AND TRADEMARK OFFICE
WASHINGTON, D.C. 20231
www.uspto.gov

Paper No. 16

JOSEPH A CALVARUSO ESQ
MORGAN & FINNEGAN LLP
345 PARK AVENUE
NEW YORK, NY 10154-0053

COPY MAILED
FEB 11 2003
OFFICE OF PETITIONS

In re Application of :
Pierre Albou :
Application No. 09/501,069 : ON PETITION
Filed: February 9, 2000 :
Attorney Docket No. 1948-4666 :

This is a decision on the petition under 37 CFR 1.313(c)(2), filed February 10, 2003, to withdraw the above-identified application from issue after payment of the issue fee.

The petition is **GRANTED**.

The above-identified application is withdrawn from issue for consideration of a submission under 37 CFR 1.114 (request for continued examination). See 37 CFR 1.313(c)(2).

Petitioner is advised that the issue fee paid on December 16, 2002, in the above-identified application cannot be refunded. If, however, the above-identified application is again allowed, petitioner may request that it be applied towards the issue fee required by the new Notice of Allowance. [1]

After receipt of the file in the Office of Petitions, the file will be forwarded to Technology Center AU 2875 for further processing of the request for continued examination under 37 CFR 1.114.

Sherry D. Brinkley
Petitions Examiner
Office of Petitions
Office of the Deputy Commissioner
for Patent Examination Policy
(703) 305-9220

[1]The request to apply the issue fee to the new Notice may be satisfied by completing and returning the new Issue Fee Transmittal Form PTOL-85(b), which includes the following language thereon: "Commissioner for Patents is requested to apply the Issue Fee and Publication Fee (if any) or re-apply any previously paid issue fee to the application identified above." Petitioner is advised that, whether a fee is indicated as being due or not, the Issue Fee Transmittal Form **must** be completed and timely submitted to avoid abandonment. Note the language in bold text on the first page of the Notice of Allowance and Fee(s) Due (PTOL-85).

UNITED STATES PATENT AND TRADEMARK OFFICE

COMMISSIONER FOR PATENTS
UNITED STATES PATENT AND TRADEMARK OFFICE
WASHINGTON, D.C. 20231
www.uspto.gov

Paper No. 15

Date : February 10, 2003

TO : Director, Office of Patent Publication

FROM : Office of the Deputy Commissioner
for Patent Examination Policy

SUBJECT : Withdrawal from Issue of

Applicant(s) : PIERRE ALBOU
Application No. : 09/501,069
Filed : February 9, 2000

The above-identified application has been assigned Patent No. 6,517,228 and an issue date of February 11, 2003.

It is hereby directed that this application be withdrawn from issue at the request of the applicant.

Do not refund the issue fee.

The following erratum should be published in the Official Gazette if the above-identified application is published in the OG of February 11, 2003:

> "All reference to Patent No. 6,517,228 to PIERRE ALBOU of FRANCE for A METHOD FOR MOTOR VEHICLE HEADLAMP OF THE ELLIPTICAL TYPE CAPABLE OF EMITTING A CUT-OFF BEAM WITH IMPROVED PHOTOMETRY appearing in the Official Gazette of February 11, 2003, should be deleted since no patent was granted."

Sherry D. Brinkley
Sherry D. Brinkley
Petitions Examiner
Office of Petitions
Office of the Deputy Commissioner
for Patent Examination Policy

cc: Geraldine Dozier, Crystal Park 3-441 (FAX-306-2737)
Deneise Boyd, Crystal Park 2, Suite 1100 (FAX-308-5413)
Mary Louise McAskill, Crystal Park 3-910 (FAX 305-4372)
Niomi Farmer, Crystal Park 3-910 (FAX-305-4372)
Mary E. Johnson (Cookie), P/OCS, CM1-6D07
Duane K.Davis, P/OCS, CM1-6A07

UNITED STATES PATENT AND TRADEMARK OFFICE

COMMISSIONER FOR PATENTS
UNITED STATES PATENT AND TRADEMARK OFFICE
P.O. BOX 1450
ALEXANDRIA, VA 22131-1450
www.uspto.gov

Paper No. 17

Joseph A Calvaruso Esq
Morgan & Finnegan LLP
345 Park Avenue
New York NY 10154-0053

COPY MAILED

JUN 16 2003

OFFICE OF PETITIONS

In re Application of	:	
Pierre Albou	:	DECISION ON
Application No. 09/501,069	:	PETITION
Filed: February 9, 2000	:	
Attorney Docket No. 1948-4666	:	

This is a decision on the petition filed February 10, 2003, requesting that the above-identified application be accorded a filing date of February 9, 2000, with drawing Figures 1-10 in the French priority document as part of the original disclosure.

On February 9, 2000, the application was filed with drawing Figures 1-15.

On September 18, 2002, the Office mailed a Notice of Allowance and Fee(s) Due to applicant. In response, on February 10, 2003, applicant submitted the present petition, a petition to withdraw from issue, request for continued examination, a preliminary amendment, copies of Figures 1-10 of the French priority document, and the requisite fees. Applicant states that on February 9, 2000, applicant submitted (1) a certified copy of the French priority document, including an accurate set of drawing Figures 1-10, which correspond to the English language specification, and (2) an erroneous set of drawings Figures 1-15. Applicant further states that despite the inclusion of erroneous drawing Figures 1-15, the application papers satisfied the filing date requirements by virtue of the submission on filing of drawing Figures 1-10 of certified copy of applicant's priority document.

A review of the record reveals that 5 sheets of drawings (Figures 1-15) were submitted with the application papers on February 9, 2000. However, the brief description of the drawings and the body of the specification for this application describe drawings of Figures 1-10. Clearly, Figures 1-15 filed with this application are not the drawings intended for this application. A further review of the record reveals that the application papers, filed on February 9, 2000, included a French foreign priority document, which contained 4 sheets of drawings (Figures

1-10). Accordingly, the 5 sheets of drawings (Figure 1-15), submitted on filing will be withdrawn. The 4 drawing sheets (Figures 1-10), as they appear in the foreign priority document, will be scanned and used during the prosecution of this application.

To the extent indicated above, the petition is granted.

The $130.00 petition fee will be charged to Deposit Account No. 13-4500 because the present petition and petition fee were necessary in view of applicant's filing error.

The application will be forwarded to the Office of Initial Examination to process the application with a filing date of February 9, 2000, and to replace the 5 drawing sheets (Figures 1-15) with the 4 drawing sheets (Figures 1-10). The Office is further directed to scan the 4 sheets of drawings (Figures 1-10) of the French priority document, and to indicate that 4 sheets of drawings were present on filing.

Telephone inquiries related to this decision should be directed to the undersigned at (703) 306-5589.

Christina Tartera Donnell

Christina Tartera Donnell
Senior Petitions Attorney
Office of Petitions

UNITED STATES PATENT AND TRADEMARK OFFICE

Commissioner for Patents
United States Patent and Trademark Office
P.O. Box 1450
Alexandria, VA 22313-1450
www.uspto.gov

Stern, Kessler Goldstein & Fox PLLC
Attorneys at Law
Suite 600
1100 New York Avenue NW
Washington DC 20005-3934

COPY MAILED

SEP 19 2005

OFFICE OF PETITIONS

In re Application of	:
Wang et al.	:
Application No. 09/501,179	: DECISION GRANTING LETTER
Filed: February 10, 2000 (CPA 11/1/2001)	: REGARDING PTA
Attorney Docket No.	:
2314.00600002/JUK/SMW	:

This decision is in response to applicants' "LETTER REGARDING PATENT TERM ADJUSTMENT CALCULATIONS" requesting that the Office review the PTA determination to see if such determination is greater than is appropriate. The Office thanks applicants for their good faith and candor in bringing this discrepancy to the attention of the Office.

Applicants' request is GRANTED. The Office will adjust the PAIR calculation to reflect a determination of zero (0) days at the time of the mailing of the notice of allowance.

Applicants do not expressly assert why PTA is greater than believed to be accurate. Upon review applicants are correct. The Office notes that it errantly posted June 4, 2003 as the response date to the filing of the CPA rather than the actual date of June 4, 2002. Accordingly, the Office was not 61 days late in their response. However, if June 4, 2002 was the correct date, then applicants response date of December 4, 2002 is considered a failure to engage in reasonable efforts to conclude prosecution of the application. The amount of applicant delay is ninety-one (91) days.[1] Accordingly at the time of the mailing of the notice of allowance, the Office had zero days of delay and applicant had ninety-one days.

After the mailing of this decision, the application will be forwarded to the Office of Patent Publications for a prompt issuance of the patent application.

Any delays in issuance of the patent more than four months after the payment of the issue fee and other requirements being satisfied will be added to the determination at the time of the mailing of the issue notification letter.

The Office will not assess any fees in association with this decision. The Office thanks applicants for their good faith and candor in bringing this to the attention of the Office.

---

[1]Delay began on September 5, 2002 day after the three month deadline and ended on December 4,2002.

Any questions concerning this decision should be directed to Kery A. Fries, at 571-272-7757.

Kery A. Fries

Kery A. Fries
Senior Legal Advisor
Office of Patent Legal Administration
Office of Deputy Commissioner for
Patent Examination Policy

cc: Adjusted PATR Calculation

UNITED STATES PATENT AND TRADEMARK OFFICE

Commissioner for Patents
United States Patent and Trademark Office
P.O. Box 1450
Alexandria, VA 22313-1450
www.uspto.gov

COPY MAILED

JUL 24 2006

OFFICE OF PETITIONS

Stern, Kessler Goldstein & Fox PLLC
Attorneys at Law
Suite 600
1100 New York Avenue NW
Washington, DC 20005-3934

In re Application of Wang et al. Application No. 09/501,179 Filed: February 10, 2000 (CPA 11/1/2001) Attorney Docket No. 2314.00600002/JUK/SMW	: DECISION GRANTING LETTER : REGARDING PTA

This decision is in response to applicants' " REQUEST FOR RECONSIDERATION OF PATENT TERM ADJUSTMENT DETERMINATION UNDER 37 CFR 1.705(d)" requesting that the determination at the time of the issuance of the patent be corrected from 93 days to a determination of 274 days.

Applicants' request is **GRANTED**. The Office will adjust the PAIR calculation to reflect a determination of zero (0) days at the time of the mailing of the notice of allowance. In addition, the Office will *sua sponte* issue a certificate of correction reflecting this decision.

Applicants allege that the correct amount of PTA at the time of the issuance is two hundred and seventy-four (274) days. Applicants assert that the Office failed to meet the requirement of 37 CFR 1.702(b) by a period of 365 days. Applicants also assert that the appropriate amount of Applicants delay at the time of the issuance of the patent is 91 days. Applicants delay is for failure to reply to the Office within three-months under 37 CFR 1.704(b).[1] Applicants dispute the 120 reduction for the miscellaneous letter that was filed by applicant on October 18, 2004. Applicants assert that the "miscellaneous incoming letter" was the request for PTA consideration.

Applicants arguments are persuasive. The office notes that the 120 day reduction is in error. The submission of the request for PTA reconsideration is not considered a failure to engage in reasonable efforts to conclude prosecution. See 1.704(e). Accordingly, the 120 reduction is in error. Moreover, applicants are correct in the amount of Office delay as well as applicant delay. The Office delayed by 365 days in the issuance of the patent under 37 CFR 1.702(b). Moreover, the applicants failed to engage in reasonable efforts to conclude prosecution of the application by a period of 91 days under 37 CFR 1.704(b). Overall, the correct amount PTA is 274 (365-91=274).

After the mailing of this decision, the application will be forwarded to the Office of Patent

---

[1]This determination was decided in the petition decision that was mailed by the Office on September 19, 2005.

Publications for a prompt issuance of a certificate of correction.

The Office assessed the $200.00 fee. No additional fees are required in determining this request for reconsideration of pTA.

Any questions concerning this decision should be directed to Kery A. Fries, at 571-272-7757.

Kery A. Fries
Senior Legal Advisor
Office of Patent Legal Administration
Office of Deputy Commissioner for
Patent Examination Policy

cc:Adjusted PAIR calculation
Draft Cert. Of Correction

Draft

UNITED STATES PATENT AND TRADEMARK OFFICE

CERTIFICATE OF CORRECTION

PATENT	:	6,960,449 B2
DATED	:	Nov. 1, 2005
INVENTOR(S)	:	Wang et al.

It is certified that error appears in the above-identified patent and that said Letters Patent is hereby corrected as shown below:

On the cover page,

[*] Notice: Subject to any disclaimer, the term of this patent is extended or adjusted under 35 USC 154(b) by (93) days

Delete the phrase "by 93 days" and insert – by 274 days--

Day : Friday
Date: 7/21/2006

PALM INTRANET

Time: 11:53:22

PTA Calculations for Application: 09/501179			
Application Filing Date:	02/10/2000	PTO Delay (PTO):	365
Issue Date of Patent:	11/01/2005	Three Years:	0
Pre-Issue Petitions:	0	Applicant Delay (APPL):	120
Post-Issue Petitions:	0	Total PTA (days):	274
PTO Delay Adjustment:	29		

File Contents History

Number	Date	Contents Description	PTO	APPL	START
71	07/21/2006	ADJUSTMENT OF PTA CALCULATION BY PTO	181		
67.5	10/12/2005	PTA 36 MONTHS	97		
67	11/01/2005	PATENT ISSUE DATE USED IN PTA CALCULATION	207		62
66	10/04/2005	RECEIPT INTO PUBS			
65	10/04/2005	RECEIPT INTO PUBS			
64	10/04/2005	DISPATCH TO FDC			
63	10/04/2005	APPLICATION IS CONSIDERED READY FOR ISSUE			
62	12/08/2004	ISSUE FEE PAYMENT VERIFIED			
61	10/03/2005	TC RETURN TO PUBS			
60	09/22/2005	RECEIPT INTO PUBS			
59	09/19/2005	RECORD A PETITION DECISION OF GRANTED FOR PATENT TERM ADJUSTMENT AFTER ALLOWANCE			
59	09/19/2005	RECORD A PETITION DECISION OF GRANTED FOR PATENT TERM ADJUSTMENT AFTER ALLOWANCE			
58	09/16/2005	ADJUSTMENT OF PTA CALCULATION BY PTO		91	
58	09/16/2005	ADJUSTMENT OF PTA CALCULATION BY PTO			
57	09/16/2005	ADJUSTMENT OF PTA CALCULATION BY PTO		61	
57	09/16/2005	ADJUSTMENT OF PTA CALCULATION BY PTO			
56	09/12/2005	PUBS CASE REMAND TO TC			
55	10/18/2004	PETITION ENTERED			
54	10/18/2004	MISCELLANEOUS INCOMING LETTER		0	
53	10/18/2004	MISCELLANEOUS INCOMING LETTER		120	
52	09/24/2004	EXPORT TO INITIAL DATA CAPTURE			
51	01/12/2005	RECEIPT INTO PUBS			

50	12/08/2004	ISSUE FEE PAYMENT RECEIVED			
49	10/18/2004	RECEIPT INTO PUBS			
48	09/30/2004	WORKFLOW - FILE SENT TO CONTRACTOR			
47	09/20/2004	MAIL NOTICE OF ALLOWANCE			
46	09/17/2004	ISSUE REVISION COMPLETED			
45	09/17/2004	NOTICE OF ALLOWANCE DATA VERIFICATION COMPLETED			
44	09/17/2004	NOTICE OF ALLOWABILITY			
43	07/15/2004	DATE FORWARDED TO EXAMINER			
42	07/06/2004	FEE PAYMENT RECORDED (FEES FILED SEPARATELY E.G. NOT WITH ORIGINAL PAPERS, ETC).			
40	07/03/2004	DATE FORWARDED TO EXAMINER			
39	06/02/2004	RESPONSE AFTER NON-FINAL ACTION			
38	06/02/2004	WORKFLOW INCOMING AMENDMENT IFW			
37	03/02/2004	MAIL NON-FINAL REJECTION			
36	02/27/2004	NON-FINAL REJECTION			
35	02/27/2004	DATE FORWARDED TO EXAMINER			
34	12/04/2002	RESPONSE AFTER NON-FINAL ACTION			
33	12/04/2002	REQUEST FOR EXTENSION OF TIME - GRANTED			
32	06/12/2003	EXAMINER INTERVIEW SUMMARY RECORD (PTOL - 413)			
31	06/04/2003	MAIL NON-FINAL REJECTION	61		34
30	02/27/2004	NON-FINAL REJECTION			
29	06/04/2002	MAIL NOTICE OF WITHDRAWN ACTION			
28	02/27/2004	LETTER WITHDRAWING / VACATING OFFICE ACTION			
22	01/31/2002	MAIL FINAL REJECTION (PTOL - 326)			
21	01/14/2002	FINAL REJECTION			
20	11/01/2001	NEW OR ADDITIONAL DRAWING FILED			
19	11/01/2001	INFORMATION DISCLOSURE STATEMENT (IDS) FILED			
18	11/20/2001	DATE FORWARDED TO EXAMINER			
17	11/01/2001	CONTINUING PROSECUTION APPLICATION - CONTINUATION (ACPA)			
16	11/01/2001	DISPOSAL FOR A RCE/CPA/129 (EXPRESS ABANDONMENT IF CPA)			
15	11/01/2001	REQUEST FOR EXTENSION OF TIME - GRANTED			

14	11/01/2001	WORKFLOW - REQUEST FOR CPA - BEGIN			

Search Another: Application# Search

EXPLANATION OF PTA CALCULATION

EXPLANATION OF PTE CALCULATION

To go back use Back button on your browser toolbar.

Back to PALM | ASSIGNMENT | OASIS | Home page

PTO/SB/66 (03-09)
Approved for use through 03/31/2012. OMB 0651-0016
U.S. Patent and Trademark Office: U.S. DEPARTMENT OF COMMERCE
Under the Paperwork Reduction Act of 1995, no persons are required to respond to a collection of information unless it displays valid OMB control number.

PETITION TO ACCEPT UNINTENTIONALLY DELAYED PAYMENT OF MAINTENANCE FEE IN AN EXPIRED PATENT (37 CFR 1.378(c))

Patent Number	Issue Date (YYYY-MM-DD)	Application Number	Filing Date (YYYY-MM-DD)	Docket Number (if applicable)
6960449	2005-11-01	09501179	2000-02-10	32055-734.201

CAUTION: Maintenance fee (and surcharge, if any) payment must correctly identify: (1) the patent number and (2) the application number of the actual U.S. application leading to issuance of that patent to ensure the fee(s) is/are associated with the correct patent. 37 CFR 1.366(c) and (d).

SMALL ENTITY
☐ Patentee claims, or has previously claimed, small entity status. See 37 CFR 1.27.

LOSS OF ENTITLEMENT TO SMALL ENTITY STATUS
☐ Patentee is no longer entitled to small entity status. See 37 CFR 1.27(g)

NOT Small Entity		Small Entity	
Fee	Code	Fee	Code
◉ 3 ½ year	(1551)	○ 3 ½ year	(2551)
○ 7 ½ year	(1552)	○ 7 ½ year	(2552)
○ 11 ½ year	(1553)	○ 11 ½ year	(2553)

SURCHARGE
The surcharge required by 37 CFR 1.20(i)(2) (Fee Code 1558) must be paid as a condition of accepting unintentionally delayed payment of the maintenance fee.

MAINTENANCE FEE (37 CFR 1.20(e)-(g))
The appropriate maintenance fee must be submitted with this petition.

STATEMENT
THE UNDERSIGNED CERTIFIES THAT THE DELAY IN PAYMENT OF THE MAINTENANCE FEE TO THIS PATENT WAS UNINTENTIONAL

PETITIONER(S) REQUEST THAT THE DELAYED PAYMENT OF THE MAINTENANCE FEE BE ACCEPTED AND THE PATENT REINSTATED

THIS PORTION MUST BE COMPLETED BY THE SIGNATORY OR SIGNATORIES

37 CFR 1.378(d) states: "Any petition under this section must be signed by an attorney or agent registered to practice before the Patent and Trademark Office, or by the patentee, the assignee, or other party in interest."

I certify, in accordance with 37 CFR 1.4(d)(4) that I am

◉ An attorney or agent registered to practice before the Patent and Trademark Office

○ A sole patentee

○ A joint patentee; I certify that I am authorized to sign this submission on behalf of all the other patentees.

○ A joint patentee; all of whom are signing this e-petition

○ The assignee of record of the entire interest

Patent Practitioner			
A signature of the applicant or representative is required in accordance with 37 CFR 1.33 and 10.18. Please see 37 CFR 1.4(d) for the form of the signature			
Signature	/Mark D. McNemar, Esq., Ph.D./	Date (YYYY-MM-DD)	2009-11-06
Name	Mark D. McNemar, Esq., Ph.D.	Registration Number	64904

This collection of information is required by 37 CFR 1.378(c). The information is required to obtain or retain a benefit by the public which is to file (and by the USPTO to process) an application. Confidentiality is governed by 35 U.S.C. 122 and 37 CFR 1.11 and 1.14. This collection is estimated to take 1 hour to complete, including gathering, preparing, and submitting the completed application form to the USPTO. Time will vary depending upon the individual case. Any comments on the amount of time you require to complete this form and/ or suggestions for reducing this burden, should be sent to the Chief Information Officer, U.S. Patent and Trademark Office, U.S. Department of Commerce, P.O. Box 1450, Alexandria, VA 22313-1450. DO NOT SEND FEES OR COMPLETED FORMS TO THIS ADDRESS. **This form can only be used when in conjunction with EFS-Web. If this form is mailed to the USPTO, it may cause delays in reinstating the patent.**

Privacy Act Statement

The Privacy Act of 1974 (P.L. 93-579) requires that you be given certain information in connection with your submission of the attached form related to a patent application or patent. Accordingly, pursuant to the requirements of the Act, please be advised that: (1) the general authority for the collection of this information is 35 U.S.C. 2(b)(2); (2) furnishing of the information solicited is voluntary; and (3) the principal purpose for which the information is used by the U.S. Patent and Trademark Office is to process and/or examine your submission related to a patent application or patent. If you do not furnish the requested information, the U.S. Patent and Trademark Office may not be able to process and/or examine your submission, which may result in termination of proceedings or abandonment of the application or expiration of the patent.

The information provided by you in this form will be subject to the following routine uses:

1. The information on this form will be treated confidentially to the extent allowed under the Freedom of Information Act (5 U.S.C. 552) and the Privacy Act (5 U.S.C. 552a). Records from this system of records may be disclosed to the Department of Justice to determine whether the Freedom of Information Act requires disclosure of these records.

2. A record from this system of records may be disclosed, as a routine use, in the course of presenting evidence to a court, magistrate, or administrative tribunal, including disclosures to opposing counsel in the course of settlement negotiations.

3. A record in this system of records may be disclosed, as a routine use, to a Member of Congress submitting a request involving an individual, to whom the record pertains, when the individual has requested assistance from the Member with respect to the subject matter of the record.

4. A record in this system of records may be disclosed, as a routine use, to a contractor of the Agency having need for the information in order to perform a contract. Recipients of information shall be required to comply with the requirements of the Privacy Act of 1974, as amended, pursuant to 5 U.S.C. 552a(m).

5. A record related to an International Application filed under the Patent Cooperation Treaty in this system of records may be disclosed, as a routine use, to the International Bureau of the World Intellectual Property Organization, pursuant to the Patent Cooperation Treaty.

6. A record in this system of records may be disclosed, as a routine use, to another federal agency for purposes of National Security review (35 U.S.C. 181) and for review pursuant to the Atomic Energy Act (42 U.S.C. 218(c)).

7. A record from this system of records may be disclosed, as a routine use, to the Administrator, General Services, or his/her designee, during an inspection of records conducted by GSA as part of that agency's responsibility to recommend improvements in records management practices and programs, under authority of 44 U.S.C. 2904 and 2906. Such disclosure shall be made in accordance with the GSA regulations governing inspection of records for this purpose, and any other relevant (i.e., GSA or Commerce) directive. Such disclosure shall not be used to make determinations about individuals.

8. A record from this system of records may be disclosed, as a routine use, to the public after either publication of the application pursuant to 35 U.S.C. 122(b) or issuance of a patent pursuant to 35 U.S.C. 151. Further, a record may be disclosed, subject to the limitations of 37 CFR 1.14, as a routine use, to the public if the record was filed in an application which became abandoned or in which the proceedings were terminated and which application is referenced by either a published application, an application open to public inspections or an issued patent.

9. A record from this system of records may be disclosed, as a routine use, to a Federal, State, or local law enforcement agency, if the USPTO becomes aware of a violation or potential violation of law or regulation.

UNITED STATES PATENT AND TRADEMARK OFFICE

Commissioner for Patents
United States Patent and Trademark Office
P.O. Box 1450
Alexandria, VA 22313-1450
www.uspto.gov

In re Patent No. 6960449
Issue Date: November 1,2005
Application No. 09501179
Filed: February 10,2000
Attorney Docket No. 32055-734.201

:
:DECISION GRANTING PETITION
:UNDER 37 CFR 1.378(c)
:

This is a decision on the electronic petition, filed November 6,2009 ,under 37 CFR 1.378(c) to accept the unintentionally delayed payment of the 3.5 year maintenance fee for the above-identified patent.

The petition is **GRANTED**.

The maintenance fee is accepted, and the above-identified patent reinstated as of November 6,2009 . This decision also constitutes notice that the fee has been accepted. An electronic copy of the petition and this decision has been created as an entry in the Image File Wrapper. Nevertheless, petitioner should print and retain an independent copy.

Telephone inquiries related to this electronic decision should be directed to the Electronic Business Center at 1-866-217-9197.

UNITED STATES PATENT AND TRADEMARK OFFICE

Commissioner for Patents
United States Patent and Trademark Office
P.O. Box 1450
Alexandria, VA 22313-1450
www.uspto.gov

Shook Hardy & Bacon
2555 Grand Boulevard
Kansas City, MO 64108

COPY MAILED

JAN 1 2 2004

OFFICE OF PETITIONS

In re Application of :
Martin King et al. :
Application No. 09/501,196 : ON PETITION
Filed: February 10, 2000 :
Attorney Docket No. QUCA.95091 :

This is a decision on the petition under 37 CFR 1.137(b), filed December 15, 2003, to revive the above-identified application.

The petition is granted.

The above-identified application became abandoned for failure to reply in a timely manner to the non-final Office action mailed August 27, 2002, which set a shortened statutory period for reply of three (3) months. No extensions of time under the provisions of 37 CFR 1.136(a) were obtained. Accordingly, the above-identified application became abandoned on November 28, 2002.

The $375 fee submitted for the Request for Continued Examination filed February 27, 2003 will be credited to petitioner's deposit account.

The application file is being forwarded to Technology Center AU 2142 for further processing.

Telephone inquiries concerning this decision should be directed to Latrice Bond at (703) 308-6911.

Latrice Bond

Latrice Bond
Petitions Examiner
Office of Petitions
Office of the Deputy Commissioner
for Patent Examination Policy

UNITED STATES PATENT AND TRADEMARK OFFICE

Commissioner for Patents
United States Patent and Trademark Office
P.O. Box 1450
Alexandria, VA 22313-1450
www.uspto.gov

MAIL

MAY 0 4 2005

DIRECTOR OFFICE
TECHNOLOGY CENTER 2100

Attn Intellectual Property Counsel
Schlumberger Oilfield Services
200 Gillingham Lane MD 200-9
Sugar Land, TX 77478

In re Application of: Cao, et al.	)	
Application No.: 09/501,445	)	
Filed: February 10, 2000	)	**DECISION ON PETITION *UNDER 37 CFR §1.181***
Attorney Docket No.: 26.0178	)	
For: METHOD OF DESIGNING	)	
GEOPHYSICAL SURVEYS	)	
	)	

This is a decision on the petition filed March 17, 2005, which is being treated as a petition under 37 CFR §1.181(a), for withdrawal of the Final Rejection as premature.

A review of the file record indicates that a Notice of Allowance has been counted in the instant application, April 16, 2005, but not yet mailed.

Accordingly, in view of the above stated reason, the instant petition, filed under 37 CFR §1.181(a) to invoke supervisory authority to withdraw the Final Rejection mailed November 12, 2004, is rendered moot.

Accordingly, the petition is **DISMISSED as MOOT**.

The application file is being forwarded to the Technology Support Staff to process the mailing of the Notice of Allowability and Notice of Allowance/Issue Fee(s) due. Telephone inquiries should be directed to the undersigned at 571-272-3595.

Brian L. Johnson
Special Program Examiner 4/27/05
Technology Center 2100
Computer Architecture, Software, and Information Security

SMC

UNITED S ES PATENT AND TRADEMARK OFFIC

COMMISSIONER FOR PATENTS
UNITED STATES PATENT AND TRADEMARK OFFICE
P.O. BOX 1450
ALEXANDRIA, VA 22313-1450
www.uspto.gov

Paper No. 15

MAY 13 2004

Milliken & Company
920 Milliken Road
P. O. Box 1926
Spartanburg, SC 29304

COPY MAILED
MAY 1 1 2004
OFFICE OF PETITIONS

In re Application of
Shulong Li, et al.
Application No. 09/501,467
Filed: February 9, 2000
Attorney Docket No. 2129

ON PETITION

This is a decision on the petition under 37 CFR 1.137(b), filed November 24, 2003, to revive the above-identified application.

The petition is **GRANTED**.

A final Office action was mailed to applicant on April 22, 2003, setting a three-month shortened statutory period within which to submit a reply. In the instant petition, applicant argues that an amendment was, in fact, timely filed on June 3, 2003. Applicant provided a copy of the post card receipt establishing receipt of the amendment dated June 3, 2003. While the amendment was submitted to the Office timely, it was reviewed by the examiner and determined that it did not place the application in condition for allowance. A copy of the Advisory Action by the examiner is enclosed herewith.

In view of the above, the application was properly held abandoned and petitioner is not entitled to a refund of the petition fee.

Nevertheless, petitioner has filed a Request for Continued Examination (RCE) and submission required by 37 CFR 1.114, with the petition.

Telephone inquiries concerning this decision should be directed to the undersigned at (703) 306-3475.

The application file is being forwarded to Technology Center 1700 for processing the RCE.

Marianne E. Morgan
Petitions Examiner
Office of Petitions
Office of the Deputy Commissioner
for Patent Examination Policy

Enclosure: Advisory Action

Advisory Action	Application No.	Applicant(s)
	09/501,467	LI ET AL.
	Examiner	Art Unit
	Ms. Arti Singh	1771

--The MAILING DATE of this communication appears on the cover sheet with the correspondence address --

THE REPLY FILED 11/24/03 FAILS TO PLACE THIS APPLICATION IN CONDITION FOR ALLOWANCE. Therefore, further action by the applicant is required to avoid abandonment of this application. A proper reply to a final rejection under 37 CFR 1.113 may only be either: (1) a timely filed amendment which places the application in condition for allowance; (2) a timely filed Notice of Appeal (with appeal fee); or (3) a timely filed Request for Continued Examination (RCE) in compliance with 37 CFR 1.114.

PERIOD FOR REPLY [check either a) or b)]

a) ☒ The period for reply expires 3 months from the mailing date of the final rejection.

b) ☐ The period for reply expires on: (1) the mailing date of this Advisory Action, or (2) the date set forth in the final rejection, whichever is later. In no event, however, will the statutory period for reply expire later than SIX MONTHS from the mailing date of the final rejection. ONLY CHECK THIS BOX WHEN THE FIRST REPLY WAS FILED WITHIN TWO MONTHS OF THE FINAL REJECTION. See MPEP 706.07(f).

Extensions of time may be obtained under 37 CFR 1.136(a). The date on which the petition under 37 CFR 1.136(a) and the appropriate extension fee have been filed is the date for purposes of determining the period of extension and the corresponding amount of the fee. The appropriate extension fee under 37 CFR 1.17(a) is calculated from: (1) the expiration date of the shortened statutory period for reply originally set in the final Office action; or (2) as set forth in (b) above, if checked. Any reply received by the Office later than three months after the mailing date of the final rejection, even if timely filed, may reduce any earned patent term adjustment. See 37 CFR 1.704(b).

1.☐ A Notice of Appeal was filed on _____. Appellant's Brief must be filed within the period set forth in 37 CFR 1.192(a), or any extension thereof (37 CFR 1.191(d)), to avoid dismissal of the appeal.

2.☒ The proposed amendment(s) will not be entered because:

(a) ☒ they raise new issues that would require further consideration and/or search (see NOTE below);

(b) ☐ they raise the issue of new matter (see Note below);

(c) ☐ they are not deemed to place the application in better form for appeal by materially reducing or simplifying the issues for appeal; and/or

(d) ☐ they present additional claims without canceling a corresponding number of finally rejected claims.

NOTE: _____.

3.☐ Applicant's reply has overcome the following rejection(s): _____.

4.☐ Newly proposed or amended claim(s) _____ would be allowable if submitted in a separate, timely filed amendment canceling the non-allowable claim(s).

5.☒ The a)☐ affidavit, b)☐ exhibit, or c)☒ request for reconsideration has been considered but does NOT place the application in condition for allowance because: See Continuation Sheet.

6.☐ The affidavit or exhibit will NOT be considered because it is not directed SOLELY to issues which were newly raised by the Examiner in the final rejection.

7.☒ For purposes of Appeal, the proposed amendment(s) a)☒ will not be entered or b)☐ will be entered and an explanation of how the new or amended claims would be rejected is provided below or appended.

The status of the claim(s) is (or will be) as follows:

Claim(s) allowed: _____.

Claim(s) objected to: _____.

Claim(s) rejected: 1-39.

Claim(s) withdrawn from consideration: _____.

8.☐ The drawing correction filed on _____ is a)☐ approved or b)☐ disapproved by the Examiner.

9.☐ Note the attached Information Disclosure Statement(s)(PTO-1449) Paper No(s). _____.

10.☐ Other: _____

4/21/04

Ms. Arti Singh
Primary Examiner
Art Unit: 1771

Continuation of 5. does NOT place the application in condition for allowance because: firstly, they rely on unentered amendments, and secondly, the amended limitation that Applicant now desires, which now puts a lower limit on the amount of coating sheds a different light on the article and thus raise issues that require further search and consideration. Additionally, Applicant is made aware that optimizing the coating weight would be well within the purview of one of ordinary skill in the art, and that discovering an optimum value of a result effective variable invovles on ly routine skill in the art, as the range used by cited patent in the rejection, and to what Applicant is now claim ing varies only minimally.

SMC

UNITED ST. S PATENT AND TRADEMARK OFFICE

COMMISSIONER FOR PATENTS
UNITED STATES PATENT AND TRADEMARK OFFICE
P.O. BOX 1450
ALEXANDRIA, VA 22313-1450
www.uspto.gov

Paper No. 15

MAY 13 2004

Milliken & Company
920 Milliken Road
P. O. Box 1926
Spartanburg, SC 29304

COPY MAILED
MAY 11 2004
OFFICE OF PETITIONS

In re Application of
Shulong Li, et al.
Application No. 09/501,467
Filed: February 9, 2000
Attorney Docket No. 2129

ON PETITION

This is a decision on the petition under 37 CFR 1.137(b), filed November 24, 2003, to revive the above-identified application.

The petition is **GRANTED**.

A final Office action was mailed to applicant on April 22, 2003, setting a three-month shortened statutory period within which to submit a reply. In the instant petition, applicant argues that an amendment was, in fact, timely filed on June 3, 2003. Applicant provided a copy of the post card receipt establishing receipt of the amendment dated June 3, 2003. While the amendment was submitted to the Office timely, it was reviewed by the examiner and determined that it did not place the application in condition for allowance. A copy of the Advisory Action by the examiner is enclosed herewith.

In view of the above, the application was properly held abandoned and petitioner is not entitled to a refund of the petition fee.

Nevertheless, petitioner has filed a Request for Continued Examination (RCE) and submission required by 37 CFR 1.114, with the petition.

Telephone inquiries concerning this decision should be directed to the undersigned at (703) 306-3475.

The application file is being forwarded to Technology Center 1700 for processing the RCE.

Marianne E. Morgan
Petitions Examiner
Office of Petitions
Office of the Deputy Commissioner
for Patent Examination Policy

Enclosure: Advisory Action

Advisory Action	Application No. 09/501,467	Applicant(s) LI ET AL.	
	Examiner Ms. Arti Singh	Art Unit 1771	

--The MAILING DATE of this communication appears on the cover sheet with the correspondence address --

THE REPLY FILED 11/24/03 FAILS TO PLACE THIS APPLICATION IN CONDITION FOR ALLOWANCE. Therefore, further action by the applicant is required to avoid abandonment of this application. A proper reply to a final rejection under 37 CFR 1.113 may only be either: (1) a timely filed amendment which places the application in condition for allowance; (2) a timely filed Notice of Appeal (with appeal fee); or (3) a timely filed Request for Continued Examination (RCE) in compliance with 37 CFR 1.114.

PERIOD FOR REPLY [check either a) or b)]

a) ☒ The period for reply expires 3 months from the mailing date of the final rejection.

b) ☐ The period for reply expires on: (1) the mailing date of this Advisory Action, or (2) the date set forth in the final rejection, whichever is later. In no event, however, will the statutory period for reply expire later than SIX MONTHS from the mailing date of the final rejection. ONLY CHECK THIS BOX WHEN THE FIRST REPLY WAS FILED WITHIN TWO MONTHS OF THE FINAL REJECTION. See MPEP 706.07(f).

Extensions of time may be obtained under 37 CFR 1.136(a). The date on which the petition under 37 CFR 1.136(a) and the appropriate extension fee have been filed is the date for purposes of determining the period of extension and the corresponding amount of the fee. The appropriate extension fee under 37 CFR 1.17(a) is calculated from: (1) the expiration date of the shortened statutory period for reply originally set in the final Office action; or (2) as set forth in (b) above, if checked. Any reply received by the Office later than three months after the mailing date of the final rejection, even if timely filed, may reduce any earned patent term adjustment. See 37 CFR 1.704(b).

1.☐ A Notice of Appeal was filed on _____. Appellant's Brief must be filed within the period set forth in 37 CFR 1.192(a), or any extension thereof (37 CFR 1.191(d)), to avoid dismissal of the appeal.

2.☒ The proposed amendment(s) will not be entered because:

(a) ☒ they raise new issues that would require further consideration and/or search (see NOTE below);

(b) ☐ they raise the issue of new matter (see Note below);

(c) ☐ they are not deemed to place the application in better form for appeal by materially reducing or simplifying the issues for appeal; and/or

(d) ☐ they present additional claims without canceling a corresponding number of finally rejected claims.

NOTE: _____.

3.☐ Applicant's reply has overcome the following rejection(s): _____.

4.☐ Newly proposed or amended claim(s) _____ would be allowable if submitted in a separate, timely filed amendment canceling the non-allowable claim(s).

5.☒ The a)☐ affidavit, b)☐ exhibit, or c)☒ request for reconsideration has been considered but does NOT place the application in condition for allowance because: *See Continuation Sheet*.

6.☐ The affidavit or exhibit will NOT be considered because it is not directed SOLELY to issues which were newly raised by the Examiner in the final rejection.

7.☒ For purposes of Appeal, the proposed amendment(s) a)☒ will not be entered or b)☐ will be entered and an explanation of how the new or amended claims would be rejected is provided below or appended.

The status of the claim(s) is (or will be) as follows:

Claim(s) allowed: _____.

Claim(s) objected to: _____.

Claim(s) rejected: *1-39*.

Claim(s) withdrawn from consideration: _____.

8.☐ The drawing correction filed on _____ is a)☐ approved or b)☐ disapproved by the Examiner.

9.☐ Note the attached Information Disclosure Statement(s)(PTO-1449) Paper No(s). _____.

10.☐ Other: _____

4/21/04

Ms. Arti Singh
Primary Examiner
Art Unit: 1771

Continuation of 5. does NOT place the application in condition for allowance because: firstly, they rely on unentered amendments, and secondly, the amended limitation that Applicant now desires, which now puts a lower limit on the amount of coating sheds a different light on the article and thus raise issues that require further search and consideration. Additionally, Applicant is made aware that optimizing the coating weight would be well within the purview of one of ordinary skill in the art, and that discovering an optimum value of a result effective variable invovles on ly routine skill in the art, as the range used by cited patent in the rejection, and to what Applicant is now claim ing varies only minimally.

SMC

UNITED STATES PATENT AND TRADEMARK OFFICE

APR 2 4 2008

PATENT & TRADEMARK OFFICE

COMMISSIONER FOR PATENTS
UNITED STATES PATENT AND TRADEMARK OFFICE
P.O. BOX 1450
ALEXANDRIA, VA 22313-1450
www.uspto.gov

Paper No. 15

MAY 13 2004

Milliken & Company
920 Milliken Road
P. O. Box 1926
Spartanburg, SC 29304

COPY MAILED
MAY 1 1 2004
OFFICE OF PETITIONS

RECEIVED
ON PETITION APR 2 8 2008
TC 1700

In re Application of	:	
Shulong Li, et al.	:	
Application No. 09/501,467	:	
Filed: February 9, 2000	:	
Attorney Docket No. 2129	:	

This is a decision on the petition under 37 CFR 1.137(b), filed November 24, 2003, to revive the above-identified application.

The petition is **GRANTED**.

A final Office action was mailed to applicant on April 22, 2003, setting a three-month shortened statutory period within which to submit a reply. In the instant petition, applicant argues that an amendment was, in fact, timely filed on June 3, 2003. Applicant provided a copy of the post card receipt establishing receipt of the amendment dated June 3, 2003. While the amendment was submitted to the Office timely, it was reviewed by the examiner and determined that it did not place the application in condition for allowance. A copy of the Advisory Action by the examiner is enclosed herewith.

In view of the above, the application was properly held abandoned and petitioner is not entitled to a refund of the petition fee.

Nevertheless, petitioner has filed a Request for Continued Examination (RCE) and submission required by 37 CFR 1.114, with the petition.

Telephone inquiries concerning this decision should be directed to the undersigned at (703) 306-3475.

The application file is being forwarded to Technology Center 1700 for processing the RCE.

Marianne E. Morgan
Petitions Examiner
Office of Petitions
Office of the Deputy Commissioner
for Patent Examination Policy

Enclosure: Advisory Action

Advisory Action	Application No.	Applicant(s)	
	09/501,467	LI ET AL.	
	Examiner	Art Unit	
	Ms. Arti Singh	1771	

--The MAILING DATE of this communication appears on the cover sheet with the correspondence address --

THE REPLY FILED 11/24/03 FAILS TO PLACE THIS APPLICATION IN CONDITION FOR ALLOWANCE. Therefore, further action by the applicant is required to avoid abandonment of this application. A proper reply to a final rejection under 37 CFR 1.113 may only be either: (1) a timely filed amendment which places the application in condition for allowance; (2) a timely filed Notice of Appeal (with appeal fee); or (3) a timely filed Request for Continued Examination (RCE) in compliance with 37 CFR 1.114.

PERIOD FOR REPLY [check either a) or b)]

a) ☒ The period for reply expires 3 months from the mailing date of the final rejection.

b) ☐ The period for reply expires on: (1) the mailing date of this Advisory Action, or (2) the date set forth in the final rejection, whichever is later. In no event, however, will the statutory period for reply expire later than SIX MONTHS from the mailing date of the final rejection. ONLY CHECK THIS BOX WHEN THE FIRST REPLY WAS FILED WITHIN TWO MONTHS OF THE FINAL REJECTION. See MPEP 706.07(f).

Extensions of time may be obtained under 37 CFR 1.136(a). The date on which the petition under 37 CFR 1.136(a) and the appropriate extension fee have been filed is the date for purposes of determining the period of extension and the corresponding amount of the fee. The appropriate extension fee under 37 CFR 1.17(a) is calculated from: (1) the expiration date of the shortened statutory period for reply originally set in the final Office action; or (2) as set forth in (b) above, if checked. Any reply received by the Office later than three months after the mailing date of the final rejection, even if timely filed, may reduce any earned patent term adjustment. See 37 CFR 1.704(b).

1.☐ A Notice of Appeal was filed on _____. Appellant's Brief must be filed within the period set forth in 37 CFR 1.192(a), or any extension thereof (37 CFR 1.191(d)), to avoid dismissal of the appeal.

2.☒ The proposed amendment(s) will not be entered because:

(a) ☒ they raise new issues that would require further consideration and/or search (see NOTE below);

(b) ☐ they raise the issue of new matter (see Note below);

(c) ☐ they are not deemed to place the application in better form for appeal by materially reducing or simplifying the issues for appeal; and/or

(d) ☐ they present additional claims without canceling a corresponding number of finally rejected claims.

NOTE: _____.

3.☐ Applicant's reply has overcome the following rejection(s): _____.

4.☐ Newly proposed or amended claim(s) _____ would be allowable if submitted in a separate, timely filed amendment canceling the non-allowable claim(s).

5.☒ The a)☐ affidavit, b)☐ exhibit, or c)☒ request for reconsideration has been considered but does NOT place the application in condition for allowance because: *See Continuation Sheet*.

6.☐ The affidavit or exhibit will NOT be considered because it is not directed SOLELY to issues which were newly raised by the Examiner in the final rejection.

7.☒ For purposes of Appeal, the proposed amendment(s) a)☒ will not be entered or b)☐ will be entered and an explanation of how the new or amended claims would be rejected is provided below or appended.

The status of the claim(s) is (or will be) as follows:

Claim(s) allowed: _____.

Claim(s) objected to: _____.

Claim(s) rejected: *1-39*.

Claim(s) withdrawn from consideration: _____.

8.☐ The drawing correction filed on _____ is a)☐ approved or b)☐ disapproved by the Examiner.

9.☐ Note the attached Information Disclosure Statement(s)(PTO-1449) Paper No(s). _____.

10.☐ Other: _____

4/21/04

Ms. Arti Singh
Primary Examiner
Art Unit: 1771

Continuation of 5. does NOT place the application in condition for allowance because: firstly, they rely on unentered amendments, and secondly, the amended limitation that Applicant now desires, which now puts a lower limit on the amount of coating sheds a different light on the article and thus raise issues that require further search and consideration. Additionally, Applicant is made aware that optimizing the coating weight would be well within the purview of one of ordinary skill in the art, and that discovering an optimum value of a result effective variable invovles on ly routine skill in the art, as the range used by cited patent in the rejection, and to what Applicant is now claim ing varies only minimally.

UNITED STATES PATENT AND TRADEMARK OFFICE

TT X 0463

COMMISSIONER FOR PATENTS
UNITED STATES PATENT AND TRADEMARK OFFICE
P.O. BOX 1450
ALEXANDRIA, VA 22313-1450
www.uspto.gov

Mailed: NOV 13 2003

RPG

NOV 17 2003

Paper No. 10

In re application of
Ming Yu Huang
Serial No. 09/501,602
Filed: February 10, 2000
For: AIR PUMP HAVING MINIMUM NUMBER OF PARTS

DECISION ON PETITION

This is a decision on the PETITION TO WITHDRAW HOLDING OF ABANDONMENT, filed June 4, 2003, for failure to timely pay the required issue fee in response to the Notice of Allowance, dated November 2, 2001. Petitioner asserts that the Notice of Allowance was sent to the incorrect address.

DECISION

Since petitioner asserts that the Notice was never received, the request is accepted as a petition under 37 C.F.R. 1.181 (no fee). A review of the file and petitioner's evidence provided with the instant petition indicates that the request has merit. Applicants' argue that a change of address was sent to the USPTO on October 16, 2001, with the received amendment.

A review of applicants' evidence was persuasive. Submitted as evidence, is a copy of the dated change of address and the filing receipt from the USPTO, dated October 16, 2001, showing that, in fact, a change of address was submitted.

Therefore, the Notice of Abandonment dated April 26, 2002 is hereby withdrawn. Hence, the case is returned to pending status. The case will be returned to the LIE for 1) entering of the change address, 2) remailing of the Notice of Allowance and Issue Fee Due form, and 3) restarting the time period for payment of the required issue fee.

The Petition is **GRANTED.**

JMStone

Jacqueline Stone, Director
Technology Center 1700
Chemical and Materials Engineering

Michael D. Bednarek
SHAW PITTMAN LLP
1650 Tysons Boulevard
McLean, Va. 22102

UNITED STATES PATENT AND TRADEMARK OFFICE

Commissioner for Patents
United States Patent and Trademark Office
Washington, D.C. 20231
www.uspto.gov

Paper No. 9

MAIL
JAN 0 9 2002
DIRECTOR OFFICE
TECHNOLOGY CENTER 2600

DAVID W. HEID
SKJERVEN, MORRILL & MacPHERSON LLP
25 METRO DRIVE, SUITE 700
SAN JOSE, CA 95110-1349

In re Application of:)
Bruce D. Emo, et al.)
Application No.: 09/501,711)
Filed: February 10, 2000)
For: DISK DRIVE WITH VARIABLE)
TRACK DENSITY)

DECISION ON REQUEST TO WITHDRAW AS ATTORNEY

This is a decision on the Request To Withdraw as Attorney or Agent of record filed on December 7, 2001.

A grantable request to withdraw as attorney of record should indicate thereon the present mailing addresses of the attorney(s) who is/are withdrawing from the record and of the applicant. The request for withdrawal must be signed by every attorney seeking to withdraw or contain a clear indication that one attorney is signing on behalf of another/others. A request to withdraw will not be approved unless at least 30 (thirty) days would remain between the date of approval and the later of the expiration date of a time to file a response or the expiration date of the maximum time period which can be extended under 37 C.F.R. § 1.136(a). The effective date of withdrawal being the date of decision and not the date of request. See M.P.E.P. § 402.06. 37 C.F.R. § 1.36 further requires that the applicant or patent owner be notified of the withdrawal of the attorney or agent.

The request is **GRANTED**.

The correspondence address will be changed. All future communications from the United States Patent and Trademark Office (Office) will be directed to the address listed below until otherwise notified by applicant. Applicant is reminded of the obligation to promptly notify the Office of any change in correspondence address to ensure receipt of all communications from the Office.

Kenneth A. Wieder
Special Program Examiner
Technology Center 2600
Communications
(703) 305-4710

cc: Mobile Storage Technology, Inc.
1435 McCandless Drive
Milpitas, CA 95035

UNITED STATES PATENT AND TRADEMARK OFFICE

COMMISSIONER FOR PATENTS
UNITED STATES PATENT AND TRADEMARK OFFICE
P.O. BOX 1450
ALEXANDRIA, VA 22313-1450
WWW.USPTO.GOV

Paper No. 14

MOBILE STORAGE TECHNOLOGY INC
1435 McCANDLESS DRIVE
MILPITAS, CA 95035

COPY MAILED

AUG 0 1 2003

OFFICE OF PETITIONS

In re Application of :
Bruce D. Emo et al :
Application No. 09/09/501,711 : ON PETITION
Filed: February 10, 2000 :
Attorney Docket No. M-4951 US :

This is a decision on the petition under 37 CFR 1.137(b), filed June 16, 2003, to revive the above-identified application.

The petition is **GRANTED**.

The above-identified application became abandoned for failure to reply in a timely manner to the non-final Office action mailed October 3, 2001, which set a shortened statutory period for reply of three (3) months. No extensions of time under the provisions of 37 CFR 1.136(a) were obtained. Accordingly, the above-identified application became abandoned on January 4, 2002.

It is not apparent whether the person signing the statement of unintentional delay was in a position to have firsthand or direct knowledge of the facts and circumstances of the delay at issue. Nevertheless, such statement is being treated as having been made as the result of a reasonable inquiry into the facts and circumstances of such delay. See 37 CFR 10.18(b) and Changes to Patent Practice and Procedure; Final Rule Notice, 62 Fed. Reg. 53131, 53178 (October 10, 1997), 1203 Off. Gaz. Pat. Office 63, 103 (October 21, 1997). In the event that such an inquiry has not been made, petitioner must make such an inquiry. If such inquiry results in the discovery that it is not correct that the entire delay in filing the required reply from the due date for the reply until the filing of a grantable petition pursuant to 37 CFR 1.137(b) was unintentional, petitioner must notify the Office.

There is no indication that the person signing the instant petition was ever given a power of attorney or authorization of agent to prosecute the above-identified application. If the person signing the instant petition desires to receive future correspondence regarding this application, the appropriate power of attorney or

authorization of agent must be submitted. While a courtesy copy of this decision is being mailed to the person signing the instant petition, all future correspondence will be directed to the address of currently of record until such time as appropriate instructions are received to the contrary.

Telephone inquiries concerning this decision should be directed to Wan Laymon at (703) 305-9282.

The application file is being forwarded to Technology Center AU 2651.

Wan Laymon

Wan Laymon
Petitions Examiner
Office of Petitions
Office of the Deputy Commissioner
for Patent Examination Policy

cc: STEPHEN B. ACKERMAN
28 DAVIS AVENUE
POUGHKEEPSIE, NY 12603

UNITED STATES PATENT AND TRADEMARK OFFICE

Commissioner for Patents
United States Patent and Trademark Office
P.O. Box 1450
Alexandria, VA 22313-1450
www.uspto.gov

Paper No. 20

GEORGE O. SAILE & ASSOCIATES
28 DAVIS AVENUE
POUGHKEEPSIE, NY 12603

COPY MAILED

MAR 2 2 2005

OFFICE OF PETITIONS

In re Application of :
Bruce D. Emo et al :
Application No. 09/501,711 : ON PETITION
Filed: February 10, 2000 :
Attorney Docket No. MT00-001 :

This is a decision on the petition under 37 CFR 1.137(b), filed December 20, 2004, to revive the above-identified application.

The petition is **DISMISSED**.

Any request for reconsideration of this decision must be submitted within TWO (2) MONTHS from the mail date of this decision. Extensions of time under 37 CFR 1.136(a) are permitted. The reconsideration request should include a cover letter entitled "Renewed Petition under 37 CFR 1.137(b)." No additional fee is required with any renewed petition. Petitioner is advised that this is **not** a final agency action decision.

The above-identified application became abandoned for failure to reply in a timely manner to the non-final Office action mailed October 21, 2003, which set a shortened statutory period for reply of three (3) months. No extensions of time under the provisions of 37 CFR 1.136(a) were obtained. Accordingly, the above-identified application became abandoned on January 22, 2004.

A grantable petition to revive an abandoned application under 37 CFR 1.137(b) must be accompanied by: (1) the required reply (unless previously filed), which may met by the filing of a continuing application in a nonprovisional application abandoned for failure to prosecute, but must be the payment of the issue fee or any outstanding balance thereof in an application or patent, abandoned or lapsed for failure to pay the issue fee or any portion thereof; (2) the petition fee as set forth in 37 CFR 1.17(m); (3) a statement that the entire delay in filing the required reply from the due date for the reply until the filing of a grantable petition pursuant to 37 CFR 1.137(b) was unintentional; and (4) any terminal disclaimer (and fee as set forth in 37 CFR 1.20(d)). The petitions lacks item (1).

As to item (1), a reply to the Office action mailed on October 21, 2003, has not been submitted. A proper reply to the Office action must be submitted with the petition to revive for the petition to be granted.

Further correspondence with respect to this matter should be addressed as follows:

By mail: Mail Stop PETITIONS
Commissioner for Patents
Post Office Box 1450
Alexandria, VA 22313-1450

By hand: Customer Service Window
Randolph Building
401 Dulany street
Alexandria, VA 22314

By fax: (703) 872-9306
ATTN: Office of Petitions

Petitioner has requested a duplicate copy of the Office action mailed on October 21, 2003. A copy of the Office action is attached herewith. Any renewed petition should be accompanied by a proper reply to the Office action.

The Revocation of Power of Attorney... filed December 20, 2004 is entered and made record.

Telephone inquiries concerning this decision should be directed to Wan Laymon at (571) 272-3220.

Wan Laymon
Wan Laymon
Petitions Examiner
Office of Petitions
Office of the Deputy Commissioner
for Patent Examination Policy

Attachments: non-final Office action
Notice Regarding Change of Power of Attorney
Notice of Acceptance of Power of Attorney

UNITED STATES PATENT AND TRADEMARK OFFICE

Commissioner for Patents
United States Patent and Trademark Office
P.O. Box 1450
Alexandria, VA 22313-1450
www.uspto.gov

Paper No. 23

GEORGE O. SAILE & ASSOCIATES
28 DAVIS AVENUE
POUGHKEEPSIE, NY 12603

COPY MAILED

JUN 13 2005

OFFICE OF PETITIONS

In re Application of	:	
Bruce D. Emo et al	:	
Application No. 09/501,711	:	ON PETITION
Filed: February 10, 2000	:	
Attorney Docket No. MT00-001	:	

This is a decision on the renewed petition under 37 CFR 1.137(b), filed May 25, 2005, to revive the above-identified application.

The petition is GRANTED.

Telephone inquiries concerning this decision should be directed to Wan Laymon at (571) 272-3220.

The file is being forwarded to Technology Center AU 2651.

Wan Laymon

Wan Laymon
Petitions Examiner
Office of Petitions
Office of the Deputy Commissioner
for Patent Examination Policy

UNITED STATES PATENT AND TRADEMARK OFFICE

7-18-08

Commissioner for Patents
United States Patent and Trademark Office
P.O. Box 1450
Alexandria, VA 22313-1450
www.uspto.gov

Patent No. :7,342,741
Ser. No. : 09/501,711
Inventor(s) : Bruce D. Emo, et. al.
Issued : March 11, 2008
Title : DISK DRIVE WITH VARIAABLE TRACK DENSITY

Re: Request for Certificate of Correction

Consideration has been given your request for the issuance of a certificate of correction for the above-identified patent under the provisions of Rule(s) 1.322 or 1.323.

Assignees' names and addresses (assignment data) printed in a patent, are based *solely* on information supplied in the appropriate space for identifying the assignment data, i.e., item 3 of the Issue Fee Transmittal Form PTOL-85B. Granting of a request under 37 CFR 3.81(b) is required to correct applicant's error providing ***incorrect or erroneous*** assignment data, *before* issuance of a Certificate of Correction, under 37 CFR 1.323 *(see Manual of Patent Examining Procedures (M.P.E.P) Chp.1400, sect. 1481).* This procedure is required *at any time after the issue fee is paid*, including after issuance of the patent.

In view of the foregoing, your request is hereby denied.

A request to correct the Assignee under 37 CFR 3.81(b) should include:

A. **the processing fee set forth in 37 CFR 1.117(h) (currently $130);**
B. a statement that the failure to include the correct assignee name on the PTOL-85B was inadvertent; and
C. a copy of the Notice of Recordation of Assignment Document, reflecting the reel and frame number where the assignment(s) is recorded and/or reflecting proof of *the date* the assignment was submitted for recordation.

In the Request, Applicant(s) may request that the file be forwarded to Certificates of Correction Branch, for issuance of a Certificate of Correction, if the Request is granted.

Any request under 37 CFR 3.81(b) should be directed to the following address or facsimile number:

By mail: Mail Stop PETITIONS
Commissioner for Patents
Post Office Box 1450
Alexandria, VA 22313-1450

By hand: Customer Service Window
Mail Stop Petitions
Randolph Building
40l Dulany Street
Alexandria, VA 22314

By fax: (703) 872-9306
ATTN: Office of Petitions

If a fee (currently $100) was previously submitted for consideration of a Request for Certificate of Correction, under CFR 1.323, to correct assignment data, , no additional fee is required.

Eva James
For mary Diggs
Decisions & Certificates
of Correction Branch
(703) **308-9390 ext. 124** or 125

Stephen B. Ackerman
Saile Ackerman LLC
28 Davis Avenue
Poughkeepsie, NY 12603

ej

UNITED STATES PATENT AND TRADEMARK OFFICE

Commissioner for Patents
United States Patent and Trademark Office
P.O. Box 1450
Alexandria, VA 22313-1450
www.uspto.gov

SAILE ACKERMAN LLC
28 DAVIS AVENUE
POUGHKEEPSIE NY 12603

COPY MAILED

FEB 09 2009

OFFICE OF PETITIONS

In re Patent No. 7,342,741 :
Issue Date: 03/11/2008 :
Application No. 09/501,711 : DECISION ON PETITION
Filed: 02/10/2000 :
Attorney Docket No. MT00-001 :

This is a decision on the request under 37 CFR 3.81(b), filed September 29, 2008, to correct the assignment data on the front page of the above-identified patent by way of Certificate of Correction.

37 CFR 3.81(b) reads:

> *After payment of the issue fee:* Any request for issuance of an application in the name of the assignee submitted after the date of payment of the issue fee, and any request for a patent to be corrected to state the name of the assignee, must state that the assignment was submitted for recordation as set forth in § 3.11 before issuance of the patent, and must include a request for a certificate of correction under § 1.323 of this chapter (accompanied by the fee set forth in § 1.20(a) and the processing fee set forth in § 1.17(i) of this chapter.

Petitioner requests that the USPTO correct the assignment information on the front page of the patent by deleting "ESGW Holdings Limited, Campbell, CA (US)" and replacing it with "Mobile Storage Technology, Inc. Milpitas, CA (US)".

A review of the assignment records reveals that the assignment submitted for recordation prior to the issuance of the patent lists the assignee as "Mobile Storage Technology, Inc., Boulder, CO (US)." Petitioner states that at the time of the assignment, the assignee city/state was Boulder, CO; however, the assignee has since changed its address to Milpitas, CA.

The Office notes that the "[a]ssignment information printed on a patent is not updated after a patent is issued, and may not be reflective of the assignment recorded in the Office subsequent to the issuance of the patent." MPEP 307. Therefore, it would be improper to issue a Certificate of Correction to include the assignee's change of address of Milpitas, CA after the issuance of the patent. Nevertheless, it would be appropriate for the Office to issue a Certificate of Correction to delete the assignment

information of "ESGW Holdings Limited, Campbell, CA (US)" as it was not recorded with the USPTO.

As the correct assignment information does not appear on the Certificate of Correction submitted with the present request pursuant to 37 CFR 3.81(b), the request is **dismissed** without prejudice upon the filing of a **renewed** request under 37 CFR 3.81(b) within two months of the mailing date of this decision. The renewed request should be accompanied by a newly completed Certificate of Correction to delete "ESGW Holdings Limited, Campbell, CA (US)" and replace it with "Mobile Storage Technology, Inc., Milpitas, CA (US)". No extensions of this two-month time period is available and no additional fees are required upon filing the renewed request.

The finance records indicate that the USPTO mistakenly charged petitioner's Deposit Account twice for the Certificate of Correction fee. The $100.00 overpayment will be refunded to the Deposit Account.

Further correspondence with respect to this matter should be addressed as follows:

By mail: Mail Stop Petition
Commissioner for Patents
Box 1450
Alexandria, VA 22313

By FAX: (571) 273-8300
Attn: Office of Petitions

By hand: Customer Service Window
Randolph Building
401 Dulany Street
Alexandria, VA 22314

Correspondence may also be submitted via the Electronic File System of the USPTO.

Telephone inquiries concerning this matter may be directed to the undersigned at (571) 272-3211.

C. T. Donnell

Christina Tartera Donnell
Senior Petitions Attorney
Office of Petitions

UNITED STATES PATENT AND TRADEMARK OFFICE

Commissioner for Patents
United States Patent and Trademark Office
P.O. Box 1450
Alexandria, VA 22313-1450
www.uspto.gov

In re Application of
Merry R. SHERMAN et al
Serial No. 09/501,730
Filed: February 10, 2000
Title: AGGREGATE-FREE URATE OXIDASE FOR PREPARATION OF NON-IMMUNOGENIC POLYMER CONJUGATES

This is a decision on the petition to request change of inventorship under 37 C.F.R. § 1.324 filed March 24, 2006.

The petition has been reviewed and it is found to be in compliance with the requirements as set forth in MPEP §1481. Accordingly, the petition is granted.

Petition GRANTED.

7/12/07

Ponnathapura N. Achutamurthy
Supervisory Patent Examiner
Art Unit 1652

Shannon A. Carrol, Ph.D.
1100 New York Avenue, N.W.
Suite 600
Washington, D.C. 2005-3934

UNITED STATES PATENT AND TRADEMARK OFFICE

MAILED

MAY 16 2002

DIRECTOR'S OFFICE
TECHNOLOGY CENTER 2100

COMMISSIONER FOR PATEN
UNITED STATES PATENT AND TRADEMARK OFFI
WASHINGTON, D.C. 2023
www.uspto.g

Paper No. 14

Gordon T. Arnold
Arnold & Associates
2603 Augusta
Suite 800
Houston TX 77057

In re Application of: Rob G. Parrish	)	
Application No.: 09/501,793	)	**DECISION ON REQUEST FOR**
Filed: February 10, 2000	)	**WITHDRAWAL AS ATTORNEY**
For: TRAILER RACK RACK	)	

This is a decision on the Request To Withdraw from Representation filed February 8, 2002 and the revised Request To Withdraw from Representation filed May 2, 2002.

A grantable request to withdraw as attorney of record should indicate thereon the present mailing addresses of the attorney(s) who is/are withdrawing from the record and of the applicant. The request for withdrawal must be signed by every attorney seeking to withdraw or contain a clear indication that one attorney is signing on behalf of another/others. A request to withdraw will not be approved unless at least 30 (thirty) days would remain between the date of approval and the later of the expiration date of a time to file a response or the expiration date of the maximum time period which can be extended under 37 C.F.R. § 1. 136(a). The effective date of withdrawal being the date of decision and not the date of request. See M.P.E.P. § 402.06. 37 C.F.R. § 1.36 further requires that the applicant or patent owner be notified of the withdrawal of the attorney or agent.

The request is **GRANTED**.

All future communications from the United States Patent and Trademark Office (Office) will continue to be directed to the above-listed address until otherwise notified by applicant. Applicant is reminded of the obligation to promptly notify the Office of any change in correspondence address to ensure receipt of all communications from the Office.

for Pinchus M. Laufer
Special Programs Examiner
Technology Center 2100
Computer Architecture, Software, and Electronic Commerce
(703) 306-4160

UNITED STATES PATENT AND TRADEMARK OFFICE

Commissioner for Patents
United States Patent and Trademark Office
PO Box 1450
Arlington, VA 22313-1450
www.uspto.gov

Paper No. 27

COPY MAILED

OCT 07 2003

OFFICE OF PETITIONS

Jonathan Pierce Conley & Tayon
600 Travis, Suite 1800
Houston, TX 77002

In re Application of	:	
Rob G. Parrish	:	
Application No. 09/501,793	:	ON PETITION
Filed: February 10, 2000	:	
Attorney Docket No. P30321US	:	

This is a decision on the petition under 37 CFR 1.137(b), filed June 13, 2003, to revive the above-identified application.

The petition is **GRANTED**.

The above-identified application became abandoned for failure to reply within the meaning of 37 CFR 1.113 in a timely manner to the final Office action mailed July 24, 2002, which set a shortened statutory period for reply of three months from the mail date of the Notice. No extensions of time under the provisions of 37 CFR 1.136 have been obtained. Accordingly, the application became abandoned on October 25, 2002.

Telephone inquiries concerning this decision should be directed to Latrice Bond at (703) 308-6911.

The application file is being forwarded to Technology Center AU 3627 for processing the Request for Continued Examination under 37 CFR 1.114 filed with the instant petition.

Latrice Bond

Latrice Bond
Paralegal Specialist
Office of Petitions
Office of the Deputy Commissioner
for Patent Examination Policy

UNITED STATES PATENT AND TRADEMARK OFFICE

Commissioner for Patents
United States Patent and Trademark Office
P.O. Box 1450
Alexandria, VA 22313-1450
www.uspto.gov

ALDO J. TEST
FLEHR HOHBACH TEST ALBRITTON & HERBERT LLP
FOUR EMBARCADERO CENTER
SUITE 400
SAN FRANCISCO, CA 94111-4187

COPY MAILED

MAY 1 0 2005

OFFICE OF PETITIONS

In re Application of	:	
Norm D. Schlaegel	:	
Application No. 09/501,796	:	ON PETITION
Filed: February 8, 2000	:	
Attorney Docket No. A-68724/AJT	:	

This is a decision on the renewed petition under 37 CFR 1.137(b), filed November 8, 2004, to revive the above-identified application.

The petition is **GRANTED.**

The above-identified application became abandoned for failure to submit formal drawings in a timely manner in reply to the Notice of Allowability mailed March 19, 2004, which set a statutory period for reply of three (3) months. Accordingly, the above-identified application became abandoned on June 21, 2004.

37 CFR 1.137(b)(3) requires a statement that the entire delay in filing the required reply from the due date for the reply until the filing of a grantable petition pursuant to 37 CFR 1.137(b) was unintentional. If the statement contained in the instant petition varies from the language required by 37 CFR 1.137(b)(3), it will be interpreted as the required statement. Petitioner must notify the Office if this is **not** a correct interpretation of the statement contained in the instant petition.

A review of the record indicates that the issue fee was inadvertently charged twice. Accordingly, the additional $685 charged on November 9, 2004, will be credited back to petitioner's deposit account as authorized.

The file does not indicate a change of address has been submitted, although the address given on the petition differs from the address of record. If appropriate, a change of address should be filed in accordance with MPEP 601.03. A courtesy copy of this decision is being mailed to the address given on the petition; however, the Office will mail future correspondence solely to the address of record.

Telephone inquiries concerning this decision should be directed to the undersigned at (571) 272-3229.

This application matter is being forwarded to the Publishing Division for further processing.

Retta Williams

Retta Williams
Petitions Examiner
Office of Petitions
Office of the Deputy Commissioner
for Patent Examination Policy

cc: Aldo J. Test
Dorsey & Whitney, LLP
4 Embarcadero Center, Suite 3400
San Francisco, CA 94111-4187

UNITED STATES PATENT AND TRADEMARK OFFICE

Commissioner for Patents
United States Patent and Trademark Office
P.O. Box 1450
Alexandria, VA 22313-1450
www.uspto.gov

MERCHANT & GOULD PC
P.O. BOX 2903
MINNEAPOLIS MN 55402-0903

COPY MAILED

APR 18 2007

OFFICE OF PETITIONS

In re Application of
SOWLE, Eddie D. et al.
Application No. 09/501,876
Filed: February 10, 2000
Attorney Docket No. **163.1173USI1**

DECISION ON PETITION
TO WITHDRAW
FROM RECORD

This is a decision on the Request to Withdraw as attorney or agent of record under 37 C.F.R. § 1.36(b), filed January 22, 2007.

The request is **APPROVED**.

A grantable request to withdraw as attorney/agent of record must be signed by every attorney/agent seeking to withdraw or contain a clear indication that one attorney is signing on behalf of another/others. A request to withdraw will not be approved unless at least 30 (thirty) days would remain between the date of approval and the later of the expiration date of a time to file a response or the expiration date of the maximum time period which can be extended under 37 C.F.R. § 1.136(a).

The request was signed by Sarah M. Monfeldt. The undersigned attorney has been withdrawn; all other attorneys remain of record.

The correspondence address of record remains unchanged.

There is an outstanding Office action mailed October 10, 2006 that requires a reply from the applicant.

Telephone inquiries concerning this decision should be directed to Michelle R. Eason at 571-272-4231.

Terri Williams

Terri Williams
Petitions Examiner
Office of Petitions

cc: **SARAH M. MONFELDT**
United States Patent & Trademark Office
P.O. BOX 1450
Alexandria, VA 22313 -145

PTO/SB/83 (01-06)
Approved for use through 12/31/2008. OMB 0651-0035
U.S. Patent and Trademark Office, U.S. DEPARTMENT OF COMMERCE
Under the Paperwork Reduction Act of 1995, no persons are required to respond to a collection of information unless it displays a valid OMB control number.

IFW

REQUEST FOR WITHDRAWAL AS ATTORNEY OR AGENT AND CHANGE OF CORRESPONDENCE ADDRESS

Application Number	09/501,876
Filing Date	2-10-2000
First Named Inventor	eddie Sowle
Art Unit	1617
Examiner Name	Gina Yu
Attorney Docket Number	1103.1173US01

To: Commissioner for Patents
P.O. Box 1450
Alexandria, VA 22313-1450

OIPE IAP84 JAN 22 2007 PATENT & TRADEMARK OFFICE

Please withdraw me as attorney or agent for the above identified patent application, and

- [ ] all the attorneys/agents of record.
- [ ] the attorneys/agents (with registration numbers) listed on the attached paper(s), or
- [ ] the attorneys/agents associated with Customer Number [ ]

NOTE: This box can only be checked when the power of attorney of record in the application is to all the practitioners associated with a customer number.

The reasons for this request are:

I will be employed by the PTO as a Patent Examiner effective January 22, 2007.

CORRESPONDENCE ADDRESS

1. [X] The correspondence address is NOT affected by this withdrawal.
2. [ ] Change the correspondence address and direct all future correspondence to:

[ ] The address associated with Customer Number: [ ]

OR

[ ] Firm or Individual Name			
Address			
City		State	Zip
Country			
Telephone		Email	

Signature	Sarah Monfeldt		
Name	Sarah M. Monfeldt	Registration No.	58,311
Date	1-21-7	Telephone No.	(651)338-2626

NOTE: Withdrawal is effective when approved rather than when received. Unless there are at least 30 days between approval of withdrawal and the expiration date of a time period for response or possible extension period, the request to withdraw is normally disapproved.

This collection of information is required by 37 CFR 1.36. The information is required to obtain or retain a benefit by the public which is to file (and by the USPTO to process) an application. Confidentiality is governed by 35 U.S.C. 122 and 37 CFR 1.11 and 1.14. This collection is estimated to take 12 minutes to complete, including gathering, preparing, and submitting the completed application form to the USPTO. Time will vary depending upon the individual case. Any comments on the amount of time you require to complete this form and/or suggestions for reducing this burden, should be sent to the Chief Information Officer, U.S. Patent and Trademark Office, U.S. Department of Commerce, P.O. Box 1450, Alexandria, VA 22313-1450. DO NOT SEND FEES OR COMPLETED FORMS TO THIS ADDRESS. SEND TO: Commissioner for Patents, P.O. Box 1450, Alexandria, VA 22313-1450.

If you need assistance in completing the form, call 1-800-PTO-9199 and select option 2.

PTO/SB/66 (03-09)
Approved for use through 03/31/2012. OMB 0651-0016
U.S. Patent and Trademark Office: U.S. DEPARTMENT OF COMMERCE
Under the Paperwork Reduction Act of 1995, no persons are required to respond to a collection of information unless it displays valid OMB control number.

PETITION TO ACCEPT UNINTENTIONALLY DELAYED PAYMENT OF MAINTENANCE FEE IN AN EXPIRED PATENT (37 CFR 1.378(c))

Patent Number	Issue Date (YYYY-MM-DD)	Application Number	Filing Date (YYYY-MM-DD)	Docket Number (if applicable)
6819711	2004-11-16	09501897	2000-02-10	

CAUTION: Maintenance fee (and surcharge, if any) payment must correctly identify: (1) the patent number and (2) the application number of the actual U.S. application leading to issuance of that patent to ensure the fee(s) is/are associated with the correct patent. 37 CFR 1.366(c) and (d).

SMALL ENTITY
☐ Patentee claims, or has previously claimed, small entity status. See 37 CFR 1.27.

LOSS OF ENTITLEMENT TO SMALL ENTITY STATUS
☐ Patentee is no longer entitled to small entity status. See 37 CFR 1.27(g)

NOT Small Entity		Small Entity	
Fee	Code	Fee	Code
◉ 3 ½ year	(1551)	○ 3 ½ year	(2551)
○ 7 ½ year	(1552)	○ 7 ½ year	(2552)
○ 11 ½ year	(1553)	○ 11 ½ year	(2553)

SURCHARGE
The surcharge required by 37 CFR 1.20(i)(2) (Fee Code 1558) must be paid as a condition of accepting unintentionally delayed payment of the maintenance fee.

MAINTENANCE FEE (37 CFR 1.20(e)-(g))
The appropriate maintenance fee must be submitted with this petition.

STATEMENT
THE UNDERSIGNED CERTIFIES THAT THE DELAY IN PAYMENT OF THE MAINTENANCE FEE TO THIS PATENT WAS UNINTENTIONAL

PETITIONER(S) REQUEST THAT THE DELAYED PAYMENT OF THE MAINTENANCE FEE BE ACCEPTED AND THE PATENT REINSTATED

THIS PORTION MUST BE COMPLETED BY THE SIGNATORY OR SIGNATORIES

37 CFR 1.378(d) states: "Any petition under this section must be signed by an attorney or agent registered to practice before the Patent and Trademark Office, or by the patentee, the assignee, or other party in interest."

I certify, in accordance with 37 CFR 1.4(d)(4) that I am

◉ An attorney or agent registered to practice before the Patent and Trademark Office

○ A sole patentee

○ A joint patentee; I certify that I am authorized to sign this submission on behalf of all the other patentees.

○ A joint patentee; all of whom are signing this e-petition

○ The assignee of record of the entire interest

Patent Practitioner			
A signature of the applicant or representative is required in accordance with 37 CFR 1.33 and 10.18. Please see 37 CFR 1.4(d) for the form of the signature			
Signature	/Michael E Marion/	Date (YYYY-MM-DD)	2009-05-18
Name	Michael E. Marion	Registration Number	32266

This collection of information is required by 37 CFR 1.378(c). The information is required to obtain or retain a benefit by the public which is to file (and by the USPTO to process) an application. Confidentiality is governed by 35 U.S.C. 122 and 37 CFR 1.11 and 1.14. This collection is estimated to take 1 hour to complete, including gathering, preparing, and submitting the completed application form to the USPTO. Time will vary depending upon the individual case. Any comments on the amount of time you require to complete this form and/ or suggestions for reducing this burden, should be sent to the Chief Information Officer, U.S. Patent and Trademark Office, U.S. Department of Commerce, P.O. Box 1450, Alexandria, VA 22313-1450. DO NOT SEND FEES OR COMPLETED FORMS TO THIS ADDRESS. **This form can only be used when in conjunction with EFS-Web. If this form is mailed to the USPTO, it may cause delays in reinstating the patent.**

Privacy Act Statement

The Privacy Act of 1974 (P.L. 93-579) requires that you be given certain information in connection with your submission of the attached form related to a patent application or patent. Accordingly, pursuant to the requirements of the Act, please be advised that: (1) the general authority for the collection of this information is 35 U.S.C. 2(b)(2); (2) furnishing of the information solicited is voluntary; and (3) the principal purpose for which the information is used by the U.S. Patent and Trademark Office is to process and/or examine your submission related to a patent application or patent. If you do not furnish the requested information, the U.S. Patent and Trademark Office may not be able to process and/or examine your submission, which may result in termination of proceedings or abandonment of the application or expiration of the patent.

The information provided by you in this form will be subject to the following routine uses:

1. The information on this form will be treated confidentially to the extent allowed under the Freedom of Information Act (5 U.S.C. 552) and the Privacy Act (5 U.S.C. 552a). Records from this system of records may be disclosed to the Department of Justice to determine whether the Freedom of Information Act requires disclosure of these records.

2. A record from this system of records may be disclosed, as a routine use, in the course of presenting evidence to a court, magistrate, or administrative tribunal, including disclosures to opposing counsel in the course of settlement negotiations.

3. A record in this system of records may be disclosed, as a routine use, to a Member of Congress submitting a request involving an individual, to whom the record pertains, when the individual has requested assistance from the Member with respect to the subject matter of the record.

4. A record in this system of records may be disclosed, as a routine use, to a contractor of the Agency having need for the information in order to perform a contract. Recipients of information shall be required to comply with the requirements of the Privacy Act of 1974, as amended, pursuant to 5 U.S.C. 552a(m).

5. A record related to an International Application filed under the Patent Cooperation Treaty in this system of records may be disclosed, as a routine use, to the International Bureau of the World Intellectual Property Organization, pursuant to the Patent Cooperation Treaty.

6. A record in this system of records may be disclosed, as a routine use, to another federal agency for purposes of National Security review (35 U.S.C. 181) and for review pursuant to the Atomic Energy Act (42 U.S.C. 218(c)).

7. A record from this system of records may be disclosed, as a routine use, to the Administrator, General Services, or his/her designee, during an inspection of records conducted by GSA as part of that agency's responsibility to recommend improvements in records management practices and programs, under authority of 44 U.S.C. 2904 and 2906. Such disclosure shall be made in accordance with the GSA regulations governing inspection of records for this purpose, and any other relevant (i.e., GSA or Commerce) directive. Such disclosure shall not be used to make determinations about individuals.

8. A record from this system of records may be disclosed, as a routine use, to the public after either publication of the application pursuant to 35 U.S.C. 122(b) or issuance of a patent pursuant to 35 U.S.C. 151. Further, a record may be disclosed, subject to the limitations of 37 CFR 1.14, as a routine use, to the public if the record was filed in an application which became abandoned or in which the proceedings were terminated and which application is referenced by either a published application, an application open to public inspections or an issued patent.

9. A record from this system of records may be disclosed, as a routine use, to a Federal, State, or local law enforcement agency, if the USPTO becomes aware of a violation or potential violation of law or regulation.

UNITED STATES PATENT AND TRADEMARK OFFICE

Commissioner for Patents
United States Patent and Trademark Office
P.O. Box 1450
Alexandria, VA 22313-1450
www.uspto.gov

In re Patent No. 6819711
Issue Date: November 16,2004
Application No. 09501897
Filed: February 10,2000
Attorney Docket No. PHB34325US

:
:DECISION GRANTING PETITION
:UNDER 37 CFR 1.378(c)
:

This is a decision on the electronic petition, filed June 2,2009 ,under 37 CFR 1.378(c) to accept the unintentionally delayed payment of the 3.5 year maintenance fee for the above-identified patent.

The petition is **GRANTED**.

The maintenance fee is accepted, and the above-identified patent reinstated as of June 2,2009 .
This decision also constitutes notice that the fee has been accepted. An electronic copy of the petition and this decision has been created as an entry in the Image File Wrapper. Nevertheless, petitioner should print and retain an independent copy.

Telephone inquiries related to this electronic decision should be directed to the Electronic Business Center at 1-866-217-9197.

UNITED STATES PATENT AND TRADEMARK OFFICE

Commissioner for Patents
United States Patent and Trademark Office
PO Box 1450
Arlington, VA 22313-1450
www.uspto.gov

Paper No. 25

Adler & Associates
PO Box 710509
Houston, TX 77271-0509

COPY MAILED
SEP 2 2 2003
OFFICE OF PETITIONS

In re Application of :
Kimberly Kline et al. :
Application No. 09/501,912 :
Filed: February 10, 2000 :
Attorney Docket No. D6017CIP :

ON PETITION

This is a decision on the petition under 37 CFR 1.137(b), filed August 4, 2003, to revive the above-identified application.

The petition is **GRANTED**.

The above-identified application became abandoned for failure to reply within the meaning of 37 CFR 1.113 in a timely manner to the final Office action mailed December 10, 2002, which set a shortened statutory period for reply of three months. Extensions of time under the provisions of 37 CFR 1.136 have been obtained. Accordingly, the application became abandoned on May 11, 2003.

This application is being forwarded to Technology Center AU 1644 for processing the Request for Continued Examination pursuant to 37 CFR 1.114 filed with the instant petition.

Telephone inquiries regarding this decision may be directed to the undersigned at (703) 308-6911.

Latrice Bond

Latrice Bond
Paralegal Specialist
Office of Petitions
Office of the Deputy Commissioner
for Patent Examination Policy

UNITED STATES PATENT AND TRADEMARK OFFICE

COMMISSIONER FOR PATENTS
UNITED STATES PATENT AND TRADEMARK OFFICE
P.O. BOX 1450
ALEXANDRIA, VA 22313-1450
www.uspto.gov

ENERGY CONVERSION DEVICES, INC.
2956 WATERVIEW DRIVE
ROCHESTER HILLS, MI 48309

COPY MAILED
APR 2 3 2004
OFFICE OF PETITIONS

In re Application of
Srinivasan Venkatesan et al
Application No. 09/501,944
Filed: February 10, 2000
Attorney Docket No. OBC-98

ON PETITION

This is a decision on the petition under 37 CFR 1.137(b), filed March 9, 2004, to revive the above-identified application.

The petition is **GRANTED**.

The above-identified application became abandoned for failure to reply within the meaning of 37 CFR 1.113 in a timely manner to the final Office action mailed July 2, 2003, which set a shortened statutory period for reply of three (3) months. A reply under 37 CFR 1.113 is limited to an amendment that *prima facie* places the application in condition for allowance or a Notice of Appeal (and appeal fee required by 37 CFR 1.17(b)). Since the amendment submitted does not *prima facie* placing the application in condition for allowance, no Notice of Appeal (and appeal fee), or a continuing application was timely filed. A two (2) month extension of time under the provisions of 37 CFR 1.136(a) were obtained. Accordingly, the above-identified application became abandoned on December 3, 2003.

Telephone inquiries concerning this decision should be directed to Wan Laymon at (703) 305-9282.

The application file is being referred to Technology Center AU 1745 for processing of the request for continued examination (RCE) under 37 CFR 1.114.

Wan Laymon
Petitions Examiner
Office of Petitions
Office of the Deputy Commissioner
for Patent Examination Policy

PTO/SB/66 (03-09)
Approved for use through 03/31/2012. OMB 0651-0016
U.S. Patent and Trademark Office: U.S. DEPARTMENT OF COMMERCE
Under the Paperwork Reduction Act of 1995, no persons are required to respond to a collection of information unless it displays valid OMB control number.

PETITION TO ACCEPT UNINTENTIONALLY DELAYED PAYMENT OF MAINTENANCE FEE IN AN EXPIRED PATENT (37 CFR 1.378(c))

Patent Number	Issue Date (YYYY-MM-DD)	Application Number	Filing Date (YYYY-MM-DD)	Docket Number (if applicable)
6,234,510	2001-05-22	09/501,980	2000-02-11	

CAUTION: Maintenance fee (and surcharge, if any) payment must correctly identify: (1) the patent number and (2) the application number of the actual U.S. application leading to issuance of that patent to ensure the fee(s) is/are associated with the correct patent. 37 CFR 1.366(c) and (d).

SMALL ENTITY
☒ Patentee claims, or has previously claimed, small entity status. See 37 CFR 1.27.

LOSS OF ENTITLEMENT TO SMALL ENTITY STATUS
☐ Patentee is no longer entitled to small entity status. See 37 CFR 1.27(g)

NOT Small Entity			Small Entity		
	Fee	Code		Fee	Code
○	3 ½ year	(1551)	○	3 ½ year	(2551)
○	7 ½ year	(1552)	◉	7 ½ year	(2552)
○	11 ½ year	(1553)	○	11 ½ year	(2553)

SURCHARGE
The surcharge required by 37 CFR 1.20(i)(2) (Fee Code 1558) must be paid as a condition of accepting unintentionally delayed payment of the maintenance fee.

MAINTENANCE FEE (37 CFR 1.20(e)-(g))
The appropriate maintenance fee must be submitted with this petition.

STATEMENT
THE UNDERSIGNED CERTIFIES THAT THE DELAY IN PAYMENT OF THE MAINTENANCE FEE TO THIS PATENT WAS UNINTENTIONAL

PETITIONER(S) REQUEST THAT THE DELAYED PAYMENT OF THE MAINTENANCE FEE BE ACCEPTED AND THE PATENT REINSTATED

THIS PORTION MUST BE COMPLETED BY THE SIGNATORY OR SIGNATORIES

37 CFR 1.378(d) states: "Any petition under this section must be signed by an attorney or agent registered to practice before the Patent and Trademark Office, or by the patentee, the assignee, or other party in interest."

I certify, in accordance with 37 CFR 1.4(d)(4) that I am

◉ An attorney or agent registered to practice before the Patent and Trademark Office

○ A sole patentee

○ A joint patentee; I certify that I am authorized to sign this submission on behalf of all the other patentees.

○ A joint patentee; all of whom are signing this e-petition

○ The assignee of record of the entire interest

Patent Practitioner			
A signature of the applicant or representative is required in accordance with 37 CFR 1.33 and 10.18. Please see 37 CFR 1.4(d) for the form of the signature			
Signature	/jim francis/	Date (YYYY-MM-DD)	2009-12-29
Name	James M. Francis	Registration Number	52909

This collection of information is required by 37 CFR 1.378(c). The information is required to obtain or retain a benefit by the public which is to file (and by the USPTO to process) an application. Confidentiality is governed by 35 U.S.C. 122 and 37 CFR 1.11 and 1.14. This collection is estimated to take 1 hour to complete, including gathering, preparing, and submitting the completed application form to the USPTO. Time will vary depending upon the individual case. Any comments on the amount of time you require to complete this form and/ or suggestions for reducing this burden, should be sent to the Chief Information Officer, U.S. Patent and Trademark Office, U.S. Department of Commerce, P.O. Box 1450, Alexandria, VA 22313-1450. DO NOT SEND FEES OR COMPLETED FORMS TO THIS ADDRESS. **This form can only be used when in conjunction with EFS-Web. If this form is mailed to the USPTO, it may cause delays in reinstating the patent.**

Privacy Act Statement

The Privacy Act of 1974 (P.L. 93-579) requires that you be given certain information in connection with your submission of the attached form related to a patent application or patent. Accordingly, pursuant to the requirements of the Act, please be advised that: (1) the general authority for the collection of this information is 35 U.S.C. 2(b)(2); (2) furnishing of the information solicited is voluntary; and (3) the principal purpose for which the information is used by the U.S. Patent and Trademark Office is to process and/or examine your submission related to a patent application or patent. If you do not furnish the requested information, the U.S. Patent and Trademark Office may not be able to process and/or examine your submission, which may result in termination of proceedings or abandonment of the application or expiration of the patent.

The information provided by you in this form will be subject to the following routine uses:

1. The information on this form will be treated confidentially to the extent allowed under the Freedom of Information Act (5 U.S.C. 552) and the Privacy Act (5 U.S.C. 552a). Records from this system of records may be disclosed to the Department of Justice to determine whether the Freedom of Information Act requires disclosure of these records.

2. A record from this system of records may be disclosed, as a routine use, in the course of presenting evidence to a court, magistrate, or administrative tribunal, including disclosures to opposing counsel in the course of settlement negotiations.

3. A record in this system of records may be disclosed, as a routine use, to a Member of Congress submitting a request involving an individual, to whom the record pertains, when the individual has requested assistance from the Member with respect to the subject matter of the record.

4. A record in this system of records may be disclosed, as a routine use, to a contractor of the Agency having need for the information in order to perform a contract. Recipients of information shall be required to comply with the requirements of the Privacy Act of 1974, as amended, pursuant to 5 U.S.C. 552a(m).

5. A record related to an International Application filed under the Patent Cooperation Treaty in this system of records may be disclosed, as a routine use, to the International Bureau of the World Intellectual Property Organization, pursuant to the Patent Cooperation Treaty.

6. A record in this system of records may be disclosed, as a routine use, to another federal agency for purposes of National Security review (35 U.S.C. 181) and for review pursuant to the Atomic Energy Act (42 U.S.C. 218(c)).

7. A record from this system of records may be disclosed, as a routine use, to the Administrator, General Services, or his/her designee, during an inspection of records conducted by GSA as part of that agency's responsibility to recommend improvements in records management practices and programs, under authority of 44 U.S.C. 2904 and 2906. Such disclosure shall be made in accordance with the GSA regulations governing inspection of records for this purpose, and any other relevant (i.e., GSA or Commerce) directive. Such disclosure shall not be used to make determinations about individuals.

8. A record from this system of records may be disclosed, as a routine use, to the public after either publication of the application pursuant to 35 U.S.C. 122(b) or issuance of a patent pursuant to 35 U.S.C. 151. Further, a record may be disclosed, subject to the limitations of 37 CFR 1.14, as a routine use, to the public if the record was filed in an application which became abandoned or in which the proceedings were terminated and which application is referenced by either a published application, an application open to public inspections or an issued patent.

9. A record from this system of records may be disclosed, as a routine use, to a Federal, State, or local law enforcement agency, if the USPTO becomes aware of a violation or potential violation of law or regulation.

UNITED STATES PATENT AND TRADEMARK OFFICE

Commissioner for Patents
United States Patent and Trademark Office
P.O. Box 1450
Alexandria, VA 22313-1450
www.uspto.gov

In re Patent No. 6234510
Issue Date: May 22,2001
Application No. 09501980
Filed: February 11,2000
Attorney Docket No. 9556.04

:

:DECISION GRANTING PETITION
:UNDER 37 CFR 1.378(c)

:

This is a decision on the electronic petition, filed December 29,2009 ,under 37 CFR 1.378(c) to accept the unintentionally delayed payment of the 7.5 year maintenance fee for the above-identified patent.

The petition is **GRANTED**.

The maintenance fee is accepted, and the above-identified patent reinstated as of December 29,2009 . This decision also constitutes notice that the fee has been accepted. An electronic copy of the petition and this decision has been created as an entry in the Image File Wrapper. Nevertheless, petitioner should print and retain an independent copy.

Telephone inquiries related to this electronic decision should be directed to the Electronic Business Center at 1-866-217-9197.

UNITED STATES PATENT AND TRADEMARK OFFICE

COMMISSIONER FOR PATENTS
UNITED STATES PATENT AND TRADEMARK OFFICE
P.O. BOX 1450
ALEXANDRIA, VA 22313-1450
WWW.USPTO.GOV

RECEIVED
SEP 0 2 2003
Trask Britt

Paper No.

JOSEPH A. WALKOWSKI
TRASK BRITT & ROSSA
P O BOX 2550
SALT LAKE CITY, UT 84110

OIPE JC102
JAN 0 5 2004
PATENT & TRADEMARK OFFICE

COPY MAILED

AUG 2 9 2003

OFFICE OF PETITIONS

ON PETITION

In re Application of
Vernon M. Williams et al
Application No. 09/502,107
Filed: February 10, 2000
Attorney Docket No. 42099US(99-0174)

This is a decision on the petition under 37 CFR 1.313(c)(2), filed August 26, 2003, to withdraw the above-identified application from issue after payment of the issue fee.

The petition is **GRANTED**.

The above-identified application is withdrawn from issue for consideration of a submission under 37 CFR 1.114 (request for continued examination). See 37 CFR 1.313(c)(2).

Petitioner is advised that the issue fee paid on July 7, 2003 in the above-identified application cannot be refunded. If, however, the above-identified application is again allowed, petitioner may request that it be applied towards the issue fee required by the new Notice of Allowance.[1]

Telephone inquiries should be directed to Wan Laymon at (703) 306-5685.

Upon receipt of the file in the Office of Petitions, the file will be forwarded to Technology Center AU 2822 for processing of the request for continued examination under 37 CFR 1.114 and for consideration of the concurrently filed IDS.

Wan Laymon
Petitions Examiner
Office of Petitions
Office of the Deputy Commissioner
for Patent Examination Policy

---

[1] The request to apply the issue fee to the new Notice may be satisfied by completing and returning the new Issue Fee Transmittal Form PTOL-85(b), which includes the following language thereon: "Commissioner for Patents is requested to apply the Issue Fee and Publication Fee (if any) or re-apply any previously paid issue fee to the application identified above." Petitioner is advised that, whether a fee is indicated as being due or not, the Issue Fee Transmittal Form **must** be completed and timely submitted to avoid abandonment. Note the language in bold text on the first page of the Notice of Allowance and Fee(s) Due (PTOL-85).

UNITED STATES PATENT AND TRADEMARK OFFICE

COMMISSIONER FOR PATENTS
UNITED STATES PATENT AND TRADEMARK OFFICE
P.O. BOX 1450
ALEXANDRIA, VA 22313-1450
www.uspto.gov

JUN 30 2004

#26

KILPATRICK STOCKTON LLP
1100 PEACHTREE STREET, SUITE 2800
ATLANTA, GA 30309-4530

In re Application of	:
Pirie-Shepherd et al	:
Serial No.: 09/502,176	: PETITION DECISION
Filed: October 10, 2000	:
Attorney Docket No.: 05213-2141	:

This is in response to the petition under 37 CFR 1.137(a), which is being treated as a petition under 37 CFR 1.181, filed January 21, 2004, requesting withdrawal of abandonment based on timely filing of a reply. The delay in acting on this petition is regretted.

A review of the file history shows that the examiner mailed an Office action to applicants on May 13, 2003, setting a three month shortened statutory period for reply. Upon failure to receive a reply the application was held abandoned by Notice of Abandonment mailed December 11, 2003. Applicants state that a reply was submitted on November 13, 2003. Applicants have submitted a copies of reply to the office action (exhibit A), petition for extension of time for three month (Exhibit B), the fee for the extension of time (Exhibit C), and the copy of USPTO confirmation of the receipt of the response mailed on November 13, 2003. A review of the above copies shows that the reply was timely filed, and the reply was not timely correlated with the file. In view of the evidence presented, the Notice of Abandonment is withdrawn and the application restored to pending status with the mailing of this decision.

The petition is **GRANTED**.

The application will be forwarded to the examiner for further consideration.

Inasmuch as this petition was decided under 37 CFR 1.181 no petition fee is required and the petition fee paid of $55.00 will be credited to applicants' Deposit Account No. 11-0855.

Should there be any questions about this decision please contact William R. Dixon, Jr., by letter addressed to Director, TC 1600, at the address listed above, or by telephone at 571-272-0519 or by facsimile sent to the general Office facsimile number 703-872-9306.

Jasmine Chambers
Director, Technology Center 1600

Under the Paperwork Reduction Act of 1995, no persons are required to respond to a collection of information unless it displays valid OMB control number.

PETITION TO ACCEPT UNINTENTIONALLY DELAYED PAYMENT OF MAINTENANCE FEE IN AN EXPIRED PATENT (37 CFR 1.378(c))

Patent Number	Issue Date (YYYY-MM-DD)	Application Number	Filing Date (YYYY-MM-DD)	Docket Number (if applicable)
6615269	2003-09-02	09502271	2000-02-11	042933/286306

CAUTION: Maintenance fee (and surcharge, if any) payment must correctly identify: (1) the patent number and (2) the application number of the actual U.S. application leading to issuance of that patent to ensure the fee(s) is/are associated with the correct patent. 37 CFR 1.366(c) and (d).

SMALL ENTITY
☐ Patentee claims, or has previously claimed, small entity status. See 37 CFR 1.27.

LOSS OF ENTITLEMENT TO SMALL ENTITY STATUS
☐ Patentee is no longer entitled to small entity status. See 37 CFR 1.27(g)

NOT Small Entity		Small Entity	
Fee	Code	Fee	Code
◉ 3 ½ year	(1551)	○ 3 ½ year	(2551)
○ 7 ½ year	(1552)	○ 7 ½ year	(2552)
○ 11 ½ year	(1553)	○ 11 ½ year	(2553)

SURCHARGE
The surcharge required by 37 CFR 1.20(i)(2) (Fee Code 1558) must be paid as a condition of accepting unintentionally delayed payment of the maintenance fee.

MAINTENANCE FEE (37 CFR 1.20(e)-(g))
The appropriate maintenance fee must be submitted with this petition.

STATEMENT
THE UNDERSIGNED CERTIFIES THAT THE DELAY IN PAYMENT OF THE MAINTENANCE FEE TO THIS PATENT WAS UNINTENTIONAL

PETITIONER(S) REQUEST THAT THE DELAYED PAYMENT OF THE MAINTENANCE FEE BE ACCEPTED AND THE PATENT REINSTATED

THIS PORTION MUST BE COMPLETED BY THE SIGNATORY OR SIGNATORIES

37 CFR 1.378(d) states: "Any petition under this section must be signed by an attorney or agent registered to practice before the Patent and Trademark Office, or by the patentee, the assignee, or other party in interest."

I certify, in accordance with 37 CFR 1.4(d)(4) that I am

◉ An attorney or agent registered to practice before the Patent and Trademark Office

○ A sole patentee

○ A joint patentee; I certify that I am authorized to sign this submission on behalf of all the other patentees.

○ A joint patentee; all of whom are signing this e-petition

○ The assignee of record of the entire interest

Patent Practitioner			
A signature of the applicant or representative is required in accordance with 37 CFR 1.33 and 10.18. Please see 37 CFR 1.4(d) for the form of the signature			
Signature	/Guy R. Gosnell/	Date (YYYY-MM-DD)	2008-09-16
Name	Guy R. Gosnell	Registration Number	34610

This collection of information is required by 37 CFR 1.378(c). The information is required to obtain or retain a benefit by the public which is to file (and by the USPTO to process) an application. Confidentiality is governed by 35 U.S.C. 122 and 37 CFR 1.11 and 1.14. This collection is estimated to take 1 hour to complete, including gathering, preparing, and submitting the completed application form to the USPTO. Time will vary depending upon the individual case. Any comments on the amount of time you require to complete this form and/ or suggestions for reducing this burden, should be sent to the Chief Information Officer, U.S. Patent and Trademark Office, U.S. Department of Commerce, P.O. Box 1450, Alexandria, VA 22313-1450. DO NOT SEND FEES OR COMPLETED FORMS TO THIS ADDRESS. **This form can only be used when in conjunction with EFS-Web. If this form is mailed to the USPTO, it may cause delays in reinstating the patent.**

Privacy Act Statement

The Privacy Act of 1974 (P.L. 93-579) requires that you be given certain information in connection with your submission of the attached form related to a patent application or patent. Accordingly, pursuant to the requirements of the Act, please be advised that: (1) the general authority for the collection of this information is 35 U.S.C. 2(b)(2); (2) furnishing of the information solicited is voluntary; and (3) the principal purpose for which the information is used by the U.S. Patent and Trademark Office is to process and/or examine your submission related to a patent application or patent. If you do not furnish the requested information, the U.S. Patent and Trademark Office may not be able to process and/or examine your submission, which may result in termination of proceedings or abandonment of the application or expiration of the patent.

The information provided by you in this form will be subject to the following routine uses:

1. The information on this form will be treated confidentially to the extent allowed under the Freedom of Information Act (5 U.S.C. 552) and the Privacy Act (5 U.S.C. 552a). Records from this system of records may be disclosed to the Department of Justice to determine whether the Freedom of Information Act requires disclosure of these record s.

2. A record from this system of records may be disclosed, as a routine use, in the course of presenting evidence to a court, magistrate, or administrative tribunal, including disclosures to opposing counsel in the course of settlement negotiations.

3. A record in this system of records may be disclosed, as a routine use, to a Member of Congress submitting a request involving an individual, to whom the record pertains, when the individual has requested assistance from the Member with respect to the subject matter of the record.

4. A record in this system of records may be disclosed, as a routine use, to a contractor of the Agency having need for the information in order to perform a contract. Recipients of information shall be required to comply with the requirements of the Privacy Act of 1974, as amended, pursuant to 5 U.S.C. 552a(m).

5. A record related to an International Application filed under the Patent Cooperation Treaty in this system of records may be disclosed, as a routine use, to the International Bureau of the World Intellectual Property Organization, pursuant to the Patent Cooperation Treaty.

6. A record in this system of records may be disclosed, as a routine use, to another federal agency for purposes of National Security review (35 U.S.C. 181) and for review pursuant to the Atomic Energy Act (42 U.S.C. 218(c)).

7. A record from this system of records may be disclosed, as a routine use, to the Administrator, General Services, or his/her designee, during an inspection of records conducted by GSA as part of that agency's responsibility to recommend improvements in records management practices and programs, under authority of 44 U.S.C. 2904 and 2906. Such disclosure shall be made in accordance with the GSA regulations governing inspection of records for this purpose, and any other relevant (i.e., GSA or Commerce) directive. Such disclosure shall not be used to make determinations about individuals.

8. A record from this system of records may be disclosed, as a routine use, to the public after either publication of the application pursuant to 35 U.S.C. 122(b) or issuance of a patent pursuant to 35 U.S.C. 151. Further, a record may be disclosed, subject to the limitations of 37 CFR 1.14, as a routine use, to the public if the record was filed in an application which became abandoned or in which the proceedings were terminated and which application is referenced by either a published application, an application open to public inspections or an issued patent.

9. A record from this system of records may be disclosed, as a routine use, to a Federal, State, or local law enforcement agency, if the USPTO becomes aware of a violation or potential violation of law or regulation.

UNITED STATES PATENT AND TRADEMARK OFFICE

Commissioner for Patents
United States Patent and Trademark Office
P.O. Box 1450
Alexandria, VA 22313-1450
www.uspto.gov

In re Patent No. 6615269
Issue Date: September 2,2003
Application No. 09502271
Filed: February 11,2000
Attorney Docket No. 297-009068-US-(PAR)

:
:DECISION GRANTING PETITION
:UNDER 37 CFR 1.378(c)
:

This is a decision on the electronic petition, filed September 16,2008 ,under 37 CFR 1.378(c) to accept the unintentionally delayed payment of the 3.5 year maintenance fee for the above-identified patent.

The petition is **GRANTED**.

The maintenance fee is accepted, and the above-identified patent reinstated as of September 16,2008 . This decision also constitutes notice that the fee has been accepted. An electronic copy of the petition and this decision has been created as an entry in the Image File Wrapper. Nevertheless, petitioner should print and retain an independent copy.

Telephone inquiries related to this electronic decision should be directed to the Electronic Business Center at 1-866-217-9197.

UNITED STATES PATENT AND TRADEMARK OFFICE

Commissioner for Patents
United States Patent and Trademark Office
P.O. Box 1450Alexandria, VA 22313-1450
www.uspto.gov

JJGJR.: 06-06

Paper No: __

MAXYGEN, INC.
INTELLECTUAL PROPERTY DEPARTMENT
515 GALVESTON DRIVE
RED WOOD CITY CA 94063

COPY MAILED

JUN 27 2006

OFFICE OF PETITIONS

In re Application of	:	
Arends, et al.	:	
Application No. 09/502,283	:	ON PETITION
Filed: 11 February, 2000	:	
Attorney Docket No. 02-29510US	:	

This is a decision on a petition filed on 13 April, 2006, under 37 C.F.R. §1.137(b).

For the reasons set forth below, the petition under 37 C.F.R. §1.137(b) is **GRANTED**.

BACKGROUND

The record indicates:

- it would appear that Petitioner failed to reply timely to the Notice of Allowance/Allowability and Fees Due mailed on 29 November, 2005, with reply due under a non-extendable deadline on or before 1 March, 2006;

- the instant application went abandoned by operation of law after midnight 1 March, 2006;

- however, the indication is that on 28 February, 2006, the Examiner (as outlined in an Interview report) withdrew the Notice of Allowance/Allowability previously mailed after noting that a drawing requirement set forth in the Office action of 4 December, 2001, had not been satisfied before the 29 November, 2005, mailing;

- the Office mailed the Notice of Abandonment on 28 February, 2006;
- Petitioner filed the instant petition on 13 April, 2006, with, *inter alia*, a reply in the form of an amendment and drawings, and made the statement of unintentional delay–thus, Petitioner appears to have satisfied the regulatory requirements under 37 C.F.R. §1.137(b);
- out of an abundance of caution, Petitioners always are reminded that those registered to practice *and* all others who make representations before the Office are reminded to inquire into the underlying facts of representations made to the Office and support averments with the appropriate documentation–since all owe to the Office the continuing duty to disclose.[1]

---

[1] See supplement of 17 June, 1999. The Patent and Trademark Office is relying on petitioner's duty of candor and good faith and accepting a statement made by Petitioner. See Changes to Patent Practice and Procedure, 62 Fed. Reg. at 53160 and 53178, 1203 Off. Gaz. Pat. Office at 88 and 103 (responses to comments 64 and 109)(applicant obligated under 37 C.F.R. §10.18 to inquire into the underlying facts and circumstances when providing statements to the Patent and Trademark Office).

Specifically, the regulations at 37 C.F.R. §10.18 provide:

§ 10.18 Signature and certificate for correspondence filed in the Patent and Trademark Office.
(a) For all documents filed in the Office in patent, trademark, and other non-patent matters, except for correspondence that is required to be signed by the applicant or party, each piece of correspondence filed by a practitioner in the Patent and Trademark Office must bear a signature by such practitioner complying with the provisions of §1.4(d), §1.4(e), or § 2.193(c)(1) of this chapter.
(b) By presenting to the Office (whether by signing, filing, submitting, or later advocating) any paper, the party presenting such paper, whether a practitioner or non-practitioner, is certifying that—

(1) All statements made therein of the party's own knowledge are true, all statements made therein on information and belief are believed to be true, and all statements made therein are made with the knowledge that whoever, in any matter within the jurisdiction of the Patent and Trademark Office, knowingly and willfully falsifies, conceals, or covers up by any trick, scheme, or device a material fact, or makes any false, fictitious or fraudulent statements or representations, or makes or uses any false writing or document knowing the same to contain any false, fictitious or fraudulent statement or entry, shall be subject to the penalties set forth under 18 U.S.C. 1001, and that violations of this paragraph may jeopardize the validity of the application or document, or the validity or enforceability of any patent, trademark registration, or certificate resulting therefrom; and

(2) To the best of the party's knowledge, information and belief, formed after an inquiry reasonable under the circumstances, that —

(i) The paper is not being presented for any improper purpose, such as to harass someone or to cause unnecessary delay or needless increase in the cost of prosecution before the Office;

(ii) The claims and other legal contentions therein are warranted by existing law or by a nonfrivolous argument for the extension, modification, or reversal of existing law or the establishment of new law;

(iii) The allegations and other factual contentions have evidentiary support or, if specifically so identified, are likely to have evidentiary support after a reasonable opportunity for further investigation or discovery; and

(iv) The denials of factual contentions are warranted on the evidence, or if specifically so identified, are reasonably based on a lack of information or belief.

(c) Violations of paragraph (b)(1) of this section by a practitioner or non-practitioner may jeopardize the validity of the application or document, or the validity or enforceability of any patent, trademark registration, or certificate resulting therefrom. Violations of any of paragraphs (b)(2)(i) through (iv) of this section are, after notice and reasonable opportunity to respond, subject to such sanctions as deemed appropriate by the Commissioner, or the Commissioner's designee, which may include, but are not limited to, any combination of —

(1) Holding certain facts to have been established;
(2) Returning papers;
(3) Precluding a party from filing a paper, or presenting or contesting an issue;
(4) Imposing a monetary sanction;
(5) Requiring a terminal disclaimer for the period of the delay; or
(6) Terminating the proceedings in the Patent and Trademark Office.

(d) Any practitioner violating the provisions of this section may also be subject to disciplinary action. See § 10.23(c)(15).
[Added 50 FR 5175, Feb. 6, 1985, effective Mar. 8, 1985; para. (a) revised, 58 FR 54494, Oct. 22, 1993, effective Nov. 22, 1993; paras. (a) &

STATUTES, REGULATIONS AND ANALYSIS

Congress has authorized the Commissioner to "revive an application if the delay is shown to the satisfaction of the Commissioner to have been "unavoidable." 35 U.S.C. §133 (1994).[2]

The regulations at 37 C.F.R. §1.137(a) and (b) set forth the requirements for a petitioner to revive a previously unavoidably or unintentionally, respectively, abandoned application under this congressional grant of authority. The language of 35 U.S.C. §133 and 37 C.F.R. §1.137(a) is clear, unambiguous, and without qualification: the delay in tendering the reply to the outstanding Office action, as well as filing the first petition seeking revival, must have been unavoidable for the reply now to be accepted on petition.[3]

Delays in responding properly raise the question whether delays are unavoidable.[4] Where there is a question whether the delay was unavoidable, Petitioners must meet the burden of establishing that the delay was unavoidable within the meaning of 35 U.S.C. §133 and 37 C.F.R. §1.137(a).[5] And the Petitioner must be diligent in attending to the matter.[6] Failure to do so does not constitute the care required under Pratt, and so cannot satisfy the test for diligence and due care.

(By contrast, unintentional delays are those that do not satisfy the very strict statutory and regulatory requirements of unavoidable delay, and also, by definition, are not intentional.[7]))

(b) revised, paras. (c) & (d) added, 62 FR 53131, Oct. 10, 1997, effective Dec. 1, 1997; para. (a) revised, 69 FR 56481, Sept. 21, 2004, effective Oct. 21, 2004]

[2] 35 U.S.C. §133 provides:
35 U.S.C. §133 Time for prosecuting application.
Upon failure of the applicant to prosecute the application within six months after any action therein, of which notice has been given or mailed to the applicant, or within such shorter time, not less than thirty days, as fixed by the Commissioner in such action, the application shall be regarded as abandoned by the parties thereto, unless it be shown to the satisfaction of the Commissioner that such delay was unavoidable.

[3] Therefore, by example, an unavoidable delay in the payment of the Filing Fee might occur if a reply is shipped by the US Postal Service, but due to catastrophic accident, the delivery is not made.

[4] See: *Changes to Patent Practice and Procedure*; *Final Rule Notice*, 62 *Fed. Reg.* at 53158-59 (October 10, 1997), 1203 *Off. Gaz. Pat. Office* at 86-87 (October 21, 1997).

[5] See: In re Application of G, 11 USPQ2d 1378, 1380 (Comm'r Pats. 1989).

[6] See: Diligence in Filing Petitions to Revive and Petitions to Withdraw the Holding of Abandonment, 1124 Off. Gaz. Pat. Office 33 (March 19, 1991). It was and is Petitioner's burden to exercise diligence in seeking either to have the holding of abandonment withdrawn or the application revived. See 1124 Off. Gaz. Pat. Office supra.

[7] Therefore, by example, an unintentional delay in the reply might occur if the reply and transmittal form are to be prepared for shipment by the US Postal Service, but other pressing matters distract one's attention and the mail is not timely deposited for shipment.

Allegations as to
Unintentional Delay

The requirements for relief under the provisions of 37 C.F.R. §1.137(b) are: petition, fee, reply, showing of unintentional delay, and–where appropriate–a terminal disclaimer and fee.

It appears that Petitioner has satisfied the requirements of the regulation.

CONCLUSION

Because Petitioner appears to have satisfied the regulatory requirements, regulation, the petition under 37 C.F.R. §1.137(b) is **granted**.

The application is released to the Examiner in Technology Center 1600 for further processing in due course.

Telephone inquiries concerning this decision may be directed to the undersigned at (571) 272-3214.

John J. Gillon, Jr.
Senior Attorney
Office of Petitions

Best Available Copy

UNITED STATES PATENT AND TRADEMARK OFFICE

Commissioner for Patents
United States Patent and Trademark Office
P.O. Box 1450
Alexandria, VA 22313-1450
www.uspto.gov

DJD

RECEIVED
MAR 07 2005
SHERIDAN, ROSS

COPY MAILED
MAR 02 2005
OFFICE OF PETITIONS

SHERIDAN ROSS PC
1560 BROADWAY
SUITE 1200
DENVER CO 80202

In re Application of
Sheldon F. Goldberg et al
Application No. 09/502,285
Filed: February 11, 2000
Attorney Docket No. 3367-2-2

ON PETITION

This is a decision on the petition, filed February 23, 2005, under 37 CFR 1.313(c)(2) to withdraw the above-identified application from issue after payment of the issue fee.

The petition is **GRANTED**.

The above-identified application is withdrawn from issue for consideration of a submission under 37 CFR 1.114 (request for continued examination). See 37 CFR 1.313(c)(2).

Petitioner is advised that the issue fee paid on September 2, 2004 in the above-identified application cannot be refunded. If, however, the above-identified application is again allowed, petitioner may request that it be applied towards the issue fee required by the new Notice of Allowance.[1]

Telephone inquiries should be directed to the undersigned at (571) 272-3208.

The examiner of Technology Center AU 3714 will consider the request for continued examination under 37 CFR 1.114.

Karen Creasy

Karen Creasy
Petitions Examiner
Office of Petitions
Office of the Deputy Commissioner
for Patent Examination Policy

---

[1] The request to apply the issue fee to the new Notice may be satisfied by completing and returning the new Issue Fee Transmittal Form PTOL-85(b), which includes the following language thereon: "Commissioner for Patents is requested to apply the Issue Fee and Publication Fee (if any) or re-apply any previously paid issue fee to the application identified above." Petitioner is advised that, whether a fee is indicated as being due or not, the Issue Fee Transmittal Form **must** be completed and timely submitted to avoid abandonment. Note the language in bold text on the first page of the Notice of Allowance and Fee(s) Due (PTOL-85).

UNITED STATES PATENT AND TRADEMARK OFFICE

Commissioner for Patents
United States Patent and Trademark Office
P.O. Box 1450
Alexandria, VA 22313-1450
www.uspto.gov

SHERIDAN ROSS PC
1560 BROADWAY
SUITE 1200
DENVER CO 80202

COPY MAILED

MAR 0 2 2005

OFFICE OF PETITIONS

ON PETITION

In re Application of :
Sheldon F. Goldberg et al :
Application No. 09/502,285 :
Filed: February 11, 2000 :
Attorney Docket No. 3367-2-2 :

This is a decision on the petition, filed February 23, 2005, under 37 CFR 1.313(c)(2) to withdraw the above-identified application from issue after payment of the issue fee.

The petition is **GRANTED**.

The above-identified application is withdrawn from issue for consideration of a submission under 37 CFR 1.114 (request for continued examination). See 37 CFR 1.313(c)(2).

Petitioner is advised that the issue fee paid on September 2, 2004 in the above-identified application cannot be refunded. If, however, the above-identified application is again allowed, petitioner may request that it be applied towards the issue fee required by the new Notice of Allowance.[1]

Telephone inquiries should be directed to the undersigned at (571) 272-3208.

The examiner of Technology Center AU 3714 will consider the request for continued examination under 37 CFR 1.114.

Karen Creasy

Karen Creasy
Petitions Examiner
Office of Petitions
Office of the Deputy Commissioner
for Patent Examination Policy

---

[1] The request to apply the issue fee to the new Notice may be satisfied by completing and returning the new Issue Fee Transmittal Form PTOL-85(b), which includes the following language thereon: "Commissioner for Patents is requested to apply the Issue Fee and Publication Fee (if any) or re-apply any previously paid issue fee to the application identified above." Petitioner is advised that, whether a fee is indicated as being due or not, the Issue Fee Transmittal Form **must** be completed and timely submitted to avoid abandonment. Note the language in bold text on the first page of the Notice of Allowance and Fee(s) Due (PTOL-85).

UNITED STATES PATENT AND TRADEMARK OFFICE

Commissioner for Patents
United States Patent and Trademark Office
P.O. Box 1450
Alexandria, VA 22313-1450
www.uspto.gov

SHERIDAN ROSS PC
1560 BROADWAY
SUITE 1200
DENVER, CO 80202

COPY MAILED
DEC 0 1 2006
OFFICE OF PETITIONS

In re Application of :
Goldberg et al. :
Application No. 09/502,285 :
Filing/371(c) Date: 02/11/2000 :
Attorney Docket Number: :
3367-2-2 : LETTER

This correspondence is in response to a Petition to Withdraw Holding of Abandonment Under 37 CFR 1.181(a)(3), or in the Alternative, Petition for Unavoidable Abandonment Under 37 CFR 1.137, filed August 18, 2006.

For the following reasons, the Application file is being referred to Group 3700 for consideration of the petition to withdraw the holding of abandonment under 37 CFR 1.181. A decision on the alternative petition to revive the application under 37 CFR 1.137(a) will be held in abeyance pending the decision on the petition under 37 CFR 1.181.

Background

A Notice of Allowance and Issue Fee Due was mailed June 28, 2004.

Applicant filed a petition to withdraw the application from issue, along with a Request for Continued Examination ("RCE"), an Information Disclosure Statement ("IDS") and an Amendment on February 23, 2004.

The RCE and IDS were inadvertently not entered.

Applicant asserts that the Amendment was a copy of a previously-filed amendment (filed May 8, 2002). Applicant states that the re-filed Amendment was filed to demonstrate that the May 8, 2002 Amendment included a request to change the title of the application that was not addressed.

The Examiner mailed an Office communication on July 14, 2005, in response to the Amendment (the RCE and IDS were not in the file). The Office communication set a one (1) month period for reply and provided for extensions of time under 37 CFR 1.136(a).

Applicant re-filed a copy of the amendment on July 22, 2006, which was noted in IFW as being non-responsive to the Office communication. A Notice of Abandonment was mailed May 18, 2006.

Applicant files the instant petition to withdraw the holding of abandonment and asserts that the RCE was not entered, and that the Office communication was issued in error and failed to address the IDS and the amendment to the title of the invention, filed may 8, 2002.

The TC is requested to address the petition to withdraw the holding of abandonment.

Telephone inquiries concerning this letter should be directed to the undersigned at (571) 272-3232.

Derek L. Woods
Attorney
Office of Petitions

UNITED STATES PATENT AND TRADEMARK OFFICE

UNITED STATES DEPARTMENT OF COMMERCE
United States Patent and Trademark Office
Address: COMMISSIONER FOR PATENTS
P.O. Box 1450
Alexandria, Virginia 22313-1450
www.uspto.gov

APPLICATION NO.	FILING DATE	FIRST NAMED INVENTOR	ATTORNEY DOCKET NO.	CONFIRMATION NO.
09/502,285	02/11/2000	Sheldon F. Goldberg	3367-2-2	4950

22442 7590 07/02/2007
SHERIDAN ROSS PC
1560 BROADWAY
SUITE 1200
DENVER, CO 80202

EXAMINER
MOSSER, ROBERT E

ART UNIT	PAPER NUMBER
3714	

MAIL DATE	DELIVERY MODE
07/02/2007	PAPER

Please find below and/or attached an Office communication concerning this application or proceeding.

The time period for reply, if any, is set in the attached communication.

UNITED STATES PATENT AND TRADEMARK OFFICE

Commissioner for Patents
United States Patent and Trademark Office
P.O. Box 1450
Alexandria, VA 22313-1450
www.uspto.gov

SHERIDAN ROSS PC
1560 BROADWAY
SUITE 1200
DENVER CO 80202

In re Application of:
GOLDBERG, SHELDON F. et al
Serial No. 09/502,285
Filed: Feb. 11, 2000
Docket: 3367-2-2
Title: **NETWORKED SYSTEM FOR PRESENTING**

DECISION ON PETITION
UNDER 37 CFR § 1.181

This is a decision on the petition filed August 18, 2006 requesting withdrawal of the holding of abandonment. This petition is being considered pursuant to 37 CFR § 1.181. No fees are required.

The petition is **Granted.**

Background

On June 28, 2004 the examiner issued a Notice of Allowance for the present application and the issue fee was paid on September 2, 2004. On February 17, 2005 the petitioner filed a Request to Amend Title of Application. The petitioner previously requested a change of title in the Amendment and Response filed on May 8, 2002. A copy of this Amendment and Response was included in the February 17, 2005 filing. A Petition to Withdraw Application from Issue was filed on February 23, 2005 along with a Request for Continued Examination to permit the consideration of new references provided in an Information Disclosure Statement. A notice granting the petition to withdraw the application from issue for consideration of the request for continued examination was mailed to the petitioner on March 2, 2005.

On July 14, 2005 the examiner issued an Office Communication detailing the failures of the petitioner's February 17, 2005 request to amend the title of the application. These failures included excessive facsimile distortion, failure to present amendments on separate sheets of paper to allow for proper indexing, as well as failure to indicate the changes to the claims through mark-up form. The petitioner was given thirty days to submit a complete reply to the Office Communication. On July 22, 2005 the petitioner mailed a hardcopy of the Request to Amend Title of Application to the USPTO. On May 18, 2006 the examiner issued a Notice of Abandonment for failure to timely file a proper reply to the Office Communication dated July 14, 2005. The petitioner subsequently filed a Petition to Withdraw Holding of Abandonment

under 37 CFR § 1.181, or in the alternative under 37 CFR § 137(a) or (b) on August 18, 2006. On December 01, 2006 the Office of Petitions issued a decision requesting the TC to address the petition.

Discussion

The examiner entered a Notice of Abandonment based on the applicant's failure to timely reply to the Office Communication mailed July 14, 2005. This Office Communication outlined the examiner's concerns with the Request to Amend Title of Application filed February 17, 2005. The petitioner addressed the examiner's concern regarding facsimile distortion by mailing a hardcopy of the request to the USPTO on July 22, 2005. The petitioner then addressed the examiner's remaining concerns regarding pagination and mark-up in the Amendment in Response to the Office Communication filed August 18, 2006. In this amendment, the petitioner entered the Request for Amendment to Title on a separate page and removed the materials to which the mark-up concerns were addressed. Through these two filings the petitioner properly handled the examiner's concerns. Additionally, it should be noted that the petitioner's request to amend the title of the application was in fact the second request for such an amendment, the first of which was filed before the Notice of Allowance. Therefore, a withdrawal of the holding of abandonment is granted.

Decision

The petition requesting withdrawal of the holding of abandonment is hereby granted. The examiner is directed to continue examination of the application, considering the additional references provided in the Information Disclosure Sheet as well as the Request for Amendment of Title. The application is being forwarded to Supervisory Patent Examiner of Art Unit 3714 for further processing.

Any inquiry regarding this decision should be directed to Henry C. Yuen, Special Programs Examiner, at (571) 272-4856 or Marc Jimenez, Training Quality Assurance Specialist, at (571)-272-4530.

PETITION GRANTED.

Karen M. Young

Karen M. Young, Director
Technology Center 3700

UNITED STATES PATENT AND TRADEMARK OFFICE

COMMISSIONER FOR PATENTS
UNITED STATES PATENT AND TRADEMARK OFFICE
P.O. BOX 1450
ALEXANDRIA, VA 22313-1450
www.uspto.gov

#58

FISH & RICHARDSON P.C.
1425 K STREET N.W.
11TH FLOOR
WASHINGTON, DC 20005-3500

COPY MAILED
APR 22 2004
OFFICE OF PETITIONS

In re Application of :
Robert A. Sanderson et al :
Application No. 09/502,357 :
Filed: February 11, 2000 :
Attorney Docket No. 09850/005001 :

ON PETITION

This is a decision on the petition, filed April 15, 2004, under 37 CFR 1.313(c)(2) to withdraw the above-identified application from issue after payment of the issue fee.

The petition is **GRANTED**.

The above-identified application is withdrawn from issue for consideration of a submission under 37 CFR 1.114 (request for continued examination). See 37 CFR 1.313(c)(2).

Petitioner is advised that the issue fee paid on October 30, 2003 in the above-identified application cannot be refunded. If, however, the above-identified application is again allowed, petitioner may request that it be applied towards the issue fee required by the new Notice of Allowance.[1]

Telephone inquiries should be directed to Wan Laymon at (703) 306-5685.

Upon receipt of the file in the Office of Petitions, the file will be forwarded to Technology Center AU 3747 for processing of the request for continued examination under 37 CFR 1.114.

Wan Laymon
Petitions Examiner
Office of Petitions
Office of the Deputy Commissioner
for Patent Examination Policy

---

[1] The request to apply the issue fee to the new Notice may be satisfied by completing and returning the new Issue Fee Transmittal Form PTOL-85(b), which includes the following language thereon: "Commissioner for Patents is requested to apply the Issue Fee and Publication Fee (if any) or re-apply any previously paid issue fee to the application identified above." Petitioner is advised that, whether a fee is indicated as being due or not, the Issue Fee Transmittal Form **must** be completed and timely submitted to avoid abandonment. Note the language in bold text on the first page of the Notice of Allowance and Fee(s) Due (PTOL-85).

UNITED STATES PATENT AND TRADEMARK OFFICE

COMMISSIONER FOR PATENTS
UNITED STATES PATENT AND TRADEMARK OFFICE
WASHINGTON, DC 20231
www.uspto.gov

Paper No. 4

MAILED

JUN 12 2003

DIRECTOR'S OFFICE
TECHNOLOGY CENTER 2600

STEPHEN Y. PANG
TOWNSEND AND TOWNSEND AND CREW
TWO EMBARCADERO CENTER
EIGHTH FLOOR
SAN FRANCISCO, CA 94111-3834

In re Application of :
Brooks et al. :
Application No. 09/502,390 :
Filed: February 10, 2000 :
For: COMPUTER PROGRAM PRODUCT FOR :
TRANSFORMING STREAMING VIDEO DATA :

DECISION ON REQUEST TO WITHDRAW AS ATTORNEY

This is a decision on the request to withdraw as attorney/agent of record filed on May 27, 2003.

A grantable request to withdraw as attorney of record should indicate thereon the present mailing addresses of the attorney(s) who is/are withdrawing from the record and of the applicant. The request for withdrawal must be signed by every attorney seeking to withdraw or contain a clear indication that one attorney is signing on behalf of another/others. A request to withdraw will not be approved unless at least 30 (thirty) days would remain between the date of approval and the later of the expiration date of a time to file a response or the expiration date of the maximum time period which can be extended under 37 C.F.R. § 1.136(a). The effective date of withdrawal being the date of decision and not the date of request. See M.P.E.P. § 402.06. 37 C.F.R. § 1.36 further requires that the applicant or patent owner be notified of the withdrawal of the attorney or agent.

The request is **GRANTED.**

All attorneys of record are granted the request for withdrawal, since Customer No. 20,350 includes all attorneys of record.

All future communications from the Office will be directed to the address listed below until otherwise notified by applicant. Applicant is reminded of the obligation to promptly notify the Patent and Trademark Office of any change in correspondence address to ensure receipt of all communications from the Office.

Kenneth Wieder
Special Program Examiner
Technology Center 2600
Communications
(703) 305-4710

cc: CONNIE WONG, CEO
VIDIATOR TECHNOLOGY (US) INC.
411 108TH AVE. NE – SUITE 688
BELLEVUE, WA 98004

UNITED STATES PATENT AND TRADEMARK OFFICE

COMMISSIONER FOR PATENTS
UNITED STATES PATENT AND TRADEMARK OFFICE
WASHINGTON, DC 20231
www.uspto.gov

Paper No. 4

STEPHEN Y. PANG
TOWNSEND AND TOWNSEND AND CREW
TWO EMBARCADERO CENTER
EIGHTH FLOOR
SAN FRANCISCO, CA 94111-3834

MAILED

JUL 1 4 2003

DIRECTOR'S OFFICE
TECHNOLOGY CENTER 2600

In re Application of	:	
Brooks et al.	:	
Application No. 09/502,409	:	DECISION ON REQUEST TO
Filed: February 10, 2000	:	WITHDRAW AS ATTORNEY
For: SYSTEM FOR TRANSFORMING	:	
STREAMING VIDEO DATA	:	

This is a decision on the request to withdraw as attorney/agent of record filed on May 27, 2003.

A grantable request to withdraw as attorney of record should indicate thereon the present mailing addresses of the attorney(s) who is/are withdrawing from the record and of the applicant. The request for withdrawal must be signed by every attorney seeking to withdraw or contain a clear indication that one attorney is signing on behalf of another/others. A request to withdraw will not be approved unless at least 30 (thirty) days would remain between the date of approval and the later of the expiration date of a time to file a response or the expiration date of the maximum time period which can be extended under 37 C.F.R. § 1.136(a). The effective date of withdrawal being the date of decision and not the date of request. See M.P.E.P. § 402.06. 37 C.F.R. § 1.36 further requires that the applicant or patent owner be notified of the withdrawal of the attorney or agent.

The request is **GRANTED.**

Richard T. Ogawa is granted the request for withdrawal. Stephen Y. Pang remains of record, since Customer No. 20,350 is not associated with the record.

All future communications from the Office will be directed to the address listed below until otherwise notified by applicant. Applicant is reminded of the obligation to promptly notify the Patent and Trademark Office of any change in correspondence address to ensure receipt of all communications from the Office.

Kenneth A. Wieder

Kenneth Wieder
Special Program Examiner
Technology Center 2600
Communications
(703) 305-4710

cc: CONNIE WONG, CEO
VIDIATOR TECHNOLOGY (US) INC.
411 108TH AVE. NE – SUITE 688
BELLEVUE, WA 98004

UNITED STATES PATENT AND TRADEMARK OFFICE

COMMISSIONER FOR PATENTS
UNITED STATES PATENT AND TRADEMARK OFFICE
WASHINGTON, DC 20231
www.uspto.gov

Paper No. 8

MAILED

SEP 1 0 2003

DIRECTOR'S OFFICE
TECHNOLOGY CENTER 2600

Connie Wong, CEO
Vidiator Technology (US) Inc.
411 108th Ave. NE
Suite 688
Bellevue WA 98004

In re Application of
BROOKS et al.
Application No. 09/502,409
Filed: February 10, 2000
For: SYSTEM FOR TRANSFORMING STREAMING VIDEO DATA

DECISION ON REQUEST TO WITHDRAW AS ATTORNEY

This is a decision on the Request to Withdraw as Attorney/Agent of record filed on August 20, 2003.

A grantable request to withdraw as attorney/agent of record must do the following:
(1) indicate the present mailing address of the attorney(s)/agent(s) who seek(s) to withdraw, and
(2) be signed by each attorney/agent seeking to withdraw or clearly be signed on their behalf, and
(3) be *approved* at least thirty (30) days prior to the maximum extendable period for response to any outstanding Office Action, and
(4) indicate the address to which future correspondence should be mailed.

Petitioner has met all of the above. Accordingly, the request is **GRANTED**.

All of the attorneys/agents listed in the Request are withdrawn.

All future communications from the Office will be directed to the address listed above until otherwise notified by applicant. Applicant is reminded of the obligation to promptly notify the Patent and Trademark Office of any change in correspondence address to ensure receipt of all communications from the Office.

Krista Zele
Special Program Examiner
Technology Center 2600
Communications
(703) 305-4701

cc: STEPHEN Y. PANG
TOWNSEND AND TOWNSEND AND CREW
TWO EMBARCADERO CENTER
EIGHTH FLOOR
SAN FRANCISCO, CA 94111-3834

UNITED STATES PATENT AND TRADEMARK OFFICE

Commissioner for Patents
United States Patent and Trademark Office
P.O. Box 1450
Alexandria, VA 22313-1450
www.uspto.gov

FISH & RICHARDSON P.C.
PO BOX 1022
MINNEAPOLIS MN 55440-1022

COPY MAILED

NOV 1 0 2009

OFFICE OF PETITIONS

In re Patent No. 6,987,025	:	
Issue Date: January 17, 2006	:	
Application No. 09/502,426	:	ON PETITION
Filed: February 11, 2000	:	
Attorney Docket No. 11696-0070001	:	

This is a notice regarding your request for acceptance of a fee deficiency submission under 37 CFR 1.28. On September 1, 1998, the Court of Appeals for the Federal Circuit held that 37 CFR 1.28(c) is the sole provision governing the time for correction of the erroneous payment of the issue fee as a small entity. **See DH Technology v. Synergystex International, Inc. 154 F.3d 1333, 47 USPQ2d 1865 (Fed. Cir. Sept. 1, 1998).**

The Office no longer investigates or rejects original or reissue applications under 37 CFR 1.56. **1098 Off. Gaz. Pat. Office 502 (January 3, 1989)**. Therefore, nothing in this Notice is intended to imply that an investigation was done.

Your fee deficiency submission under 37 CFR 1.28 is hereby **ACCEPTED**.

This patent is no longer entitled to small entity status. Accordingly, all future fees paid in this patent must be paid at the large entity rate.

It is not apparent whether the person signing the instant petition was ever given a power of attorney or authorization of agent to prosecute this patent. In accordance with 37 CFR 1.34(a), the signature appearing on the petition shall constitute a representation to the United States Patent and Trademark Office that he/she is authorized to represent the particular party in whose behalf he/she acts. While, a courtesy copy of this decision is being mailed to the person signing the instant petition, all future correspondence will be directed to the address currently of record until such time as appropriate instructions are received to the contrary.

Petitioner's deposit account has been charged $1,110.00 as authorized on May 22, 2009 as well an additional $490.00 to meet the required $980.00 large entity 3.5 year maintenance fee.

Telephone inquiries concerning this decision should be directed to Joan Olszewski at (571) 272-7751.

/Liana Walsh/
Liana Walsh
Petitions Examiner
Office of Petitions

cc: Lisbeth C. Robinson
Fish & Richardson P.C.
3200 RBC Plaza
60 South Sixth Street
Minneapolis, Minnesota 55402

UNITED STATES PATENT AND TRADEMARK OFFICE

COMMISSIONER FOR PATENTS
UNITED STATES PATENT AND TRADEMARK OFFICE
WASHINGTON, DC 20231
www.uspto.gov

Paper No. 3

MAILED

JUN 1 2 2003

DIRECTOR'S OFFICE
TECHNOLOGY CENTER 2600

STEPHEN Y. PANG
TOWNSEND AND TOWNSEND AND CREW
TWO EMBARCADERO CENTER
EIGHTH FLOOR
SAN FRANCISCO, CA 94111-3834

In re Application of	:	
Brooks et al.	:	
Application No. 09/502,549	:	DECISION ON REQUEST TO
Filed: February 10, 2000	:	WITHDRAW AS ATTORNEY
For: METHODS FOR TRANSFORMING	:	
STREAMING VIDEO DATA	:	

This is a decision on the request to withdraw as attorney/agent of record filed on May 27, 2003.

A grantable request to withdraw as attorney of record should indicate thereon the present mailing addresses of the attorney(s) who is/are withdrawing from the record and of the applicant. The request for withdrawal must be signed by every attorney seeking to withdraw or contain a clear indication that one attorney is signing on behalf of another/others. A request to withdraw will not be approved unless at least 30 (thirty) days would remain between the date of approval and the later of the expiration date of a time to file a response or the expiration date of the maximum time period which can be extended under 37 C.F.R. § 1.136(a). The effective date of withdrawal being the date of decision and not the date of request. See M.P.E.P. § 402.06. 37 C.F.R. § 1.36 further requires that the applicant or patent owner be notified of the withdrawal of the attorney or agent.

The request is **GRANTED.**

All attorneys of record are granted the request for withdrawal, since Customer No. 20,350 includes all attorneys of record.

All future communications from the Office will be directed to the address listed below until otherwise notified by applicant. Applicant is reminded of the obligation to promptly notify the Patent and Trademark Office of any change in correspondence address to ensure receipt of all communications from the Office.

For Kenneth Wieder
Special Program Examiner
Technology Center 2600
Communications
(703) 305-4710

cc: CONNIE WONG, CEO
VIDIATOR TECHNOLOGY (US) INC.
411 108TH AVE. NE – SUITE 688
BELLEVUE, WA 98004

UNITED STATES PATENT AND TRADEMARK OFFICE

Commissioner for Patents
United States Patent and Trademark Office
P.O. Box 1450
Alexandria, VA 22313-1450
www.uspto.gov

JOSEPH S. TRIPOLI
THOMSON MULTIMEDIA LICENSING INC.
TWO INDEPENDENCE WAY
P.O. BOX 5312
PRINCETON NJ 08543-5312

COPY MAILED

MAR 3 0 2005

OFFICE OF PETITIONS

In re Application of	:	
Michael Pieper	:	
Application No. 09/502,647	:	ON PETITION
Filed: February 11, 2000	:	
Attorney Docket No. RCA 90021	:	

This is a decision on the petition under 37 CFR 1.137(b), filed February 9, 2005, to revive the above-identified application.

The petition is **GRANTED**.

The two-month period for filing an appeal brief in triplicate (accompanied by the fee required by 37 CFR 1.17(c)), runs from the date of this decision.

Telephone inquiries concerning this decision should be directed to the undersigned at (571) 272-3208.

This matter is being referred to Technology Center AU 2616.

Karen Creasy

Karen Creasy
Petitions Examiner
Office of Petitions
Office of the Deputy Commissioner
for Patent Examination Policy

UNITED STATES PATENT AND TRADEMARK OFFICE

COMMISSIONER FOR PATENTS
UNITED STATES PATENT AND TRADEMARK OFFICE
P.O. BOX 1450
ALEXANDRIA, VA 22313-1450
www.uspto.gov

Paper No. 14

PATTON BOGGS
P.O. BOX 270930
LOUISVILLE, CO 80027

COPY MAILED

FEB 17 2004

OFFICE OF PETITIONS

In re Application of
Lindquist, Wesley DeWayne
Application No. 09/502,728
Filed: February 11, 2000
Attorney Docket No. 13212.107US

ON PETITION

This is a decision on the petition under 37 C.F.R. § 1.137(b), filed January 9, 2004, to revive the above-identified application.

The petition is **granted.**

This application became abandoned for failure to timely reply within three months to the non-final Office action mailed June 23, 2003. No extensions of time under the provisions of 37 CFR 1.136(a) were obtained. Accordingly, this application became abandoned on September 24, 2003.

Petitioner has met the requirements to revive the above-identified application pursuant to 37 CFR 1.137(b).

The file is now being forwarded to Technology Center 2100 for further examination on the merits.

Telephone inquiries should be directed to the undersigned at (703) 306-0482.

Liana Chase
Petitions Examiner
Office of Petitions
Office of the Deputy Commissioner
for Patent Examination Policy

UNITED STATES PATENT AND TRADEMARK OFFICE

Commissioner for Patents
United States Patent and Trademark Office
P.O. Box 1450
Alexandria, VA 22313-1450
www.uspto.gov

Paper No. 9

MARK G. LAPPIN
McDERMOTT WILL & EMERY
28 STATE STREET
BOSTON, MA 02109

COPY MAILED

FEB 15 2004

OFFICE OF PETITIONS

In re Application of	:	
Alan P. Sliski et al	:	
Application No. 09/502,762	:	DECISION GRANTING PETITION
Filed: February 11, 2000	:	UNDER 37 CFR 1.137(b)
Attorney Docket No. PHLL-141	:	

This is a decision on the petition under 37 CFR 1.137(b), filed March 19, 2004, to revive the above-identified application.

The petition is **GRANTED**.

The above-identified application became abandoned for failure to reply in a timely manner to the nonfinal Office action mailed December 19, 2002, which set a shortened statutory period for reply of three (3) months. No extensions of time under the provisions of 37 CFR 1.136(a) were obtained. Accordingly, the above-identified application became abandoned on March 19, 2003. A Notice of Abandonment was mailed on July 1, 2003.

The petition satisfies the conditions for revival pursuant to the provisions of 37 CFR 1.137(b) in that (1) the reply in the form of an "Amendment and Response"; (2) the petition fee of $1,330; and (3) the required statement of unintentional delay have been received. Accordingly, the reply to the nonfinal Office action of December 19, 2002 is accepted as having been unintentionally delayed.

Telephone inquiries concerning this decision should be directed to the undersigned at (571) 272-3218.

The application file is being forwarded to Technology Center AU 2881.

Frances Hicks

Frances Hicks
Petitions Examiner
Office of Petitions
Office of the Deputy Commissioner
for Patent Examination Policy

UNITED STATES PATENT AND TRADEMARK OFFICE

COMMISSIONER FOR PATENT
UNITED STATES PATENT AND TRADEMARK OFFIC
WASHINGTON, D.C. 20231
www.uspto.go

Paper No. 11

MAILED

AUG - 1 2003

OFFICE OF DIRECTOR
GROUP 3

Daniel J. Meaney Jr., Esq
P. O. Box 22307
Santa Barbara, CA 93121

In re Application of:	:	
Cook, et al.	:	
Application No. 09/502,812	:	DECISION ON REQUEST TO
Filed: February 09, 2000	:	WITHDRAW FROM RECORD
Attorney Docket No.: 5564 413436/080	:	

This is a decision on the request to withdraw as attorney of record under 37 C.F.R. § 1.36, filed May 02, 2003.

A grantable request to withdraw as attorney of record must be signed by every attorney seeking to withdraw or contain a clear indication that one attorney is signing on behalf of others. A request to withdraw will not be approved unless at least thirty (30) days would remain between the date of approval and the later of the expiration date of a time to file a response or the expiration date of the maximum time period that can be extended under 37 C.F.R. § 1.136(a).

The request meets all the above requirements. The request was signed by Daniel J. Meaney, the attorney of record in the above identified application and there is no outstanding Office action requiring a response by the applicant.

The request is approved.

The application currently has no attorney of record.

All future communications from the Office will be directed to the assignee, Daniel Kehoe, President of UltraCard, Inc., at the first below-listed address until otherwise notified by applicant.

A courtesy copy of this decision has been mailed to the first-named inventor Bert Cook, Jr., at the second below-listed address.

Inquiries related to this decision should be directed to Lissi Mojica Marquis at (703) 308-2260.

Lissi Mojica Marquis, Special Programs Examiner
Technology Center 2800
Semiconductors, Electrical and Optical
Systems and Components

cc: Daniel Kehoe, President
UltraCard Inc.
980 University Avenue
Los Gatos, CA 95032

Bert D. Cook, Jr.
1125 Easy Street
Morgan Hill, CA 95037

UNITED STATES PATENT AND TRADEMARK OFFICE

COMMISSIONER FOR PATENTS
UNITED STATES PATENT AND TRADEMARK OFFICE
P.O. BOX 1450
ALEXANDRIA, VA 22313-1450
www.uspto.gov

Paper No. 16

Bever Hoffman & Harms
Daniel J. Meaney, Jr.
PO Box 22307
Santa Barbara, CA 93121

COPY MAILED
MAR 03 2004
OFFICE OF PETITIONS

In re Application of
Bert D. Cook, Jr.
Application No. 09/502,812
Filed: February 9, 2000
Attorney Docket No. ULT-001-1P

ON PETITION

This is a decision on the petition under 37 CFR 1.137(b), filed January 20, 2004, to revive the above-identified application.

The petition is Granted.

The above-identified application became abandoned for failure to reply in a timely manner in reply to the non-final Office action mailed June 19, 2002, which set a shortened statutory period for reply of three months. No extensions of time under the provisions of 37 CFR 1.136 have been obtained. Accordingly, the application became abandoned on September 20, 2002.

The application file is being forwarded to Technology Center Au 2876 for further processing.

Telephone inquiries should be directed to the undersigned at (703) 308-6911.

Latrice Bond

Latrice Bond
Paralegal Specialist
Office of Petitions
Office of the Deputy Commissioner
for Patent Examination Policy

UNITED STATES PATENT AND TRADEMARK OFFICE

COMMISSIONER FOR PATENTS
UNITED STATES PATENT AND TRADEMARK OFFICE
WASHINGTON, DC 20231
www.uspto.gov

Paper No. 5

Tom M. Moran
Cooley Godward LLP
Attn: Patent Group
Five Palo Alto Square
3000 El Camino Real
Palo Alto, CA 94306-2155

MAILED

NOV 0 7 2000

Technology Center 2100

In re Application of : Derrick L. Collison et al.
Application No. 09/502,873
Filed: February 11, 2000
For: CERTIFIED MESSAGE DELIVERY AND QUEUING IN MULTIPOINT PUBLISH/SUBSCRIBE COMMUNICATIONS

DECISION ON REQUEST TO WITHRAW AS ATTORNEY OR AGENT

This is a decision on the Request To Withdraw from Representation filed July 13, 2000.

A grantable request to withdraw as attorney of record should indicate thereon the present mailing addresses of the attorney(s) who is/are withdrawing from the record and of the applicant. The request for withdrawal must be signed by every attorney seeking to withdraw or contain a clear indication that one attorney is signing on behalf of another/others. A request to withdraw will not be approved unless at least 30 (thirty) days would remain between the date of approval and the later of the expiration date of a time to file a response or the expiration date of the maximum time period which can be extended under 37 C.F.R. § 1. 136(a). The effective date of withdrawal being the date of decision and not the date of request. See M.P.E.P. § 402.06. 37 C.F.R. § 1.36 further requires that the applicant or patent owner be notified of the withdrawal of the attorney or agent.

The request is deficient in that it does not provide a clear indication that Mr. Moran is authorized to sign on behalf of the attorneys and agents listed. Accordingly, the request is **DENIED**.

All future communications from the Office will continue to be directed to the above-listed address until otherwise notified by applicant. Applicant is reminded of the obligation to promptly notify the Patent and Trademark Office (Office) of any change in correspondence address to ensure receipt of all communications from the Office.

Robert A. Weinhardt
Special Program Examiner
Technology Center 2100
Computer Architecture, Software,
& Electronic Commerce
703-305-9780

UNITED STATES PATENT AND TRADEMARK OFFICE

COMMISSIONER FOR PATENTS
UNITED STATES PATENT AND TRADEMARK OFFICE
WASHINGTON, DC 20231
www.uspto.gov

Paper No. 6

Richard M. Goldman
Cooley Godward LLP
Attn: Patent Group
Five Palo Alto Square
3000 El Camino Real
Palo Alto, CA 94306-2155

MAILED

NOV 07 2008

Technology Center 2100

In re Application of : Derrick L. Collison et al.
Application No. 09/502,873
Filed: February 11, 2000
For: CERTIFIED MESSAGE DELIVERY AND QUEUING IN MULTIPOINT PUBLISH/SUBSCRIBE COMMUNICATIONS

DECISION ON PETITION TO MAKE SPECIAL

This is a decision on the petition, filed February 11, 2000 under 37 C.F.R. §102(d) and M.P.E.P. § 708.02(VIII): Accelerated Examination, to make the above-identified application special

M.P.E.P. § 708.02, Section VIII which sets out the prerequisites for a grantable petition for Accelerated Examination under 37 C.F.R. § 102(d) states in relevant part:

A new application (one which has not received any examination by the examiner) may be granted special status provided that applicant (and this term includes applicant's attorney or agent) complies with each of the following items:

(A) Submits a petition to make special accompanied by the fee set forth in 37 CFR 1.17(i);

(B) Presents all claims directed to a single invention, or if the Office determines that all the claims presented are not obviously directed to a single invention, will make an election without traverse as a prerequisite to the grant of special status...;

(C) Submits a statement(s) that a pre-examination search was made, listing the field of search by class and subclass, publication, Chemical Abstracts, foreign patents, etc. A search made by a foreign patent office satisfies this requirement;

(D) Submits one copy each of the references deemed most closely related to the subject matter encompassed by the claims if said references are not already of record; and

(E) Submits a detailed discussion of the references, which discussion points out, with the particularity required by 37 CFR 1.111 (b) and (c), how the claimed subject matter is patentable over the references.

In those instances where the request for this special status does not meet all the prerequisites set forth above, applicant will be notified and the defects in the request will be stated. The application will remain in the status of a new application awaiting action in its regular turn. In those instances where a request is defective in one or more respects, applicant will be given one opportunity to perfect the request in a renewed petition to make special. If perfected, the request will then be granted. If not perfected in the first renewed petition, any additional renewed petitions to make special may or may not be considered at the discretion of the Group Special Program Examiner.

Applicant's submission is deficient in that it does not comply with (E) above. That is, no clear indication is given specifically pointing out how the language of the claims patentably distinguishes from the references.

Accordingly, the Petition is **DENIED**. The application file is being forwarded to Central Files to await examination in its proper turn based on its effective filing date.

Any request for reconsideration must be filed within two months of the mailing date of this decision.

Robert A. Weinhardt
Special Program Examiner
Technology Center 2100
Computer Architecture, Software,
& Electronic Commerce
703-305-9780

UNITED STATES PATENT AND TRADEMARK OFFICE

Commissioner for Patents
United States Patent and Trademark Office
P.O. Box 1450
Alexandria, VA 22313-1450
www.uspto.gov

DOCKET ADMINISTRATOR
LUCENT TECHNOLOGIES INC.
ROOM 2F-190
600 MOUNTAIN AVENUE
MURRAY HILL, NJ 07974-0636

COPY MAILED
DEC 0 5 2006
OFFICE OF PETITIONS

In re Application of	:	
Banerjee et al.	:	
Application No. 09/502,882	:	
Filing or 371(c) Date: 02/11/2000	:	ON PETITION
Attorney Docket Number:	:	
56115534-118128	:	

This is a decision on the petition under 37 CFR 1.137(b), filed August 10, 2006, to revive the above-identified application. The delay in treating this petition is regretted.

This Petition is hereby **dismissed**.

Any further petition to revive the above-identified application must be submitted within TWO (2) MONTHS from the mail date of this decision. Extensions of time under 37 CFR 1.136(a) are permitted. The reconsideration request should include a cover letter entitled "Request for Reconsideration of Petition under [insert the applicable code section]". This is **not** final agency action within the meaning of 5 U.S.C. § 704.

Background

The above-identified application became abandoned for failure to timely and properly reply to the final Office action, mailed July 26, 2004. The Office action set a three (3) month period for reply from the mail date of the Office action. Extensions of time were available under 37 CFR 1.136(a). Applicant filed a reply on October 28, 2004; however, the reply failed to place the application in condition for allowance. No complete and proper reply having been received, the application became abandoned on October 27, 2005. A Notice of Abandonment was mailed June 29, 2006.

The instant petition

Applicant files the instant petition and Amendment.

The Examiner has reviewed the Amendment and concluded that the Amendment fails to place the application in condition for allowance.

Further correspondence with respect to this matter should be addressed as follows:

By mail: Director for Patents
PO Box 1450
Alexandria, VA 22313-1450

By FAX: (571) 273-8300
Attn: Office of Petitions

By hand: Customer Service Window
Randolph Building
401 Dulany Street
Alexandria, VA 22314

Inquiries regarding the Amendment should be directed to the Examiner. Telephone inquiries concerning this petition Decision should be directed to the undersigned at (571) 272-3232.

Derek L. Woods
Attorney
Office of Petitions

UNITED STATES PATENT AND TRADEMARK OFFICE

Commissioner for Patents
United States Patent and Trademark Office
P.O. Box 1450
Alexandria, VA 22313-1450
www.uspto.gov

DOCKET ADMINISTRATOR
LUCENT TECHNOLOGIES INC.
ROOM 2F-190
600 MOUNTAIN AVENUE
MURRAY HILL, NJ 07974-0636

COPY MAILED

JUL 30 2007

OFFICE OF PETITIONS

In re Application of :
Banerjee et al. :
Application No. 09/502,882 :
Filing or 371(c) Date: 02/11/2000 :
Attorney Docket Number: :
56115534-118128 :

ON PETITION

This is a decision on the Request for Reconsideration of Petition Under 37 CFR 1.137(b), filed May 7, 2007, to revive the above-identified application.

The petition is granted.

Background

The above-identified application became abandoned for failure to timely and properly reply to the final Office action, mailed July 26, 2004. The Office action set a three (3) month period for reply from the mail date of the Office action. Extensions of time were available under 37 CFR 1.136(a). Applicant filed a reply on October 28, 2004; however, the reply failed to place the application in condition for allowance. No complete and proper reply having been received, the application became abandoned on October 27, 2005. A Notice of Abandonment was mailed June 29, 2006.

Applicant files the instant petition and Amendment in response to the Office action. The Amendment has been approved by the Examiner. The petition satisfies the conditions for revival pursuant to the provisions of 37 CFR 1.137(b) in that (1) the reply in the form of an Amendment is filed with the present petition; (2) the petition fee (previously submitted); and (3) the required statement of unintentional delay (previously submitted). Accordingly, the reply is accepted as having been unintentionally delayed.

Applicant is advised that no additional petition fee is due.

This application is being referred to Technology Center Art Unit 2616 for processing of the Amendment filed with the petition.

Telephone inquiries concerning this decision should be directed to the undersigned at (571) 272-3232.

Derek L. Woods
Attorney
Office of Petitions

UNITED STATES PATENT AND TRADEMARK OFFICE

COMMISSIONER FOR PATENTS
UNITED STATES PATENT AND TRADEMARK OFFICE
WASHINGTON, D.C. 20231
www.uspto.gov

Paper No. 11

MAILED

JUL 2 8 2003

Technology Center 2100

Law Offices of Albert S. Michalik, PLLC
704-228th Avenue NE
Suite 193
Sammamish, WA 98074

In re Application of: Capps et al. Application No. 09/502,970 Attorney Docket No. 2300 Filed: February 11, 2000 For: UNIFIED NAVIGATION SHELL USER INTERFACE	))))))	DECISION ON PETITION TO WITHDRAWAL HOLDING OF ABANDONMENT UNDER 37 CFR § 1.181(a)

This is a decision on the petition filed on May 27, 2003 to withdraw the holding of abandonment under 37 CFR § 1.181(a) (Paper No. 8) mailed on March 25, 2003. The abandonment was based upon applicants' failure to respond to the Office action mailed July 2, 2002.

Applicable Prosecution History

Jul 2, 2002	Restriction requirement mailed setting one-month period for reply (Paper No. 7)
Mar 25, 2003	Notice of abandonment mailed (Paper No. 8)
May 27, 2003	Petition filed under 37 CFR § 1.181(a) along with change of address

Issues

The petition includes statements from Mr. Albert S. Michalik that the Office communication mailed July 2, 2002 was not received; and that a search of the file jacket and docket records indicated the Office action was not received. The practitioner has attached two pages of an attorney docket printout for Office communications received through mid-November 2002. The practitioner also states the Notice of Abandonment was mailed to an incorrect address. The correct address should have been "704 228th Avenue NE, Suite 193 Sammamish Washington 98074." A change of correspondence address has been submitted.

Decision

In the absence of any apparent irregularity associated with the mailing of an Office communication, the Office presumes the communication was properly mailed to the address of record. According to MPEP §711.03(c), the showing required to establish nonreceipt of an Office action includes the following:

a) a statement from the practitioner that the Office action was not received,
b) a statement from the practitioner attesting to the fact that a search of the file jacket and docket records indicates the Office communication was not received,
c) a copy of the docket record where the nonreceived Office communication would have been entered had it been received and docketed, and
d) a reference to the docket record in the practitioner's statement.

The practitioner's statements should be made in regard to records the *address of record at the time of the mailing*. A review of the Office file fails to show evidence the practitioner filed a change of address after the original filing of the declaration until the submission with this petition. While the Notice of Abandonment may have been sent to the "wrong" address, according to the practitioner, there is no evidence that provides an explanation as to why the Notice of Abandonment was mailed to the Sammamish Washington address. Therefore, it appears the July 2002 paper was mailed to the proper address and the Notice of Abandonment was improperly mailed to the wrong address.

Therefore, the submission is deficient because the practitioner has provided incomplete evidence. Specifically, the evidence should be for the Bellevue Washington address at the time of the mailing of the Office communication. If the practitioner filed a change of address prior to the mailing of July 2, 2002, proof of that submission along with the date of the change also should be provided.

The presumption of nonreceipt remains. The petition is **DISMISSED**.

If petitioners desire further review of this decision, petitioners should file a Request for Reconsideration within two (2) months of the mailing date of this decision. Telephone inquiries should be directed to the undersigned at (703) 308-0269.

Josie A. Ballato

Josie A. Ballato
Special Programs Examiner
Technology Center 2100
Computer Architecture, Software, and Information Security

#13

UNITED STATES PATENT AND TRADEMARK OFFICE

MAILED

APR 12 2004

TECHNOLOGY CENTER 2100

COMMISSIONER FOR PATENTS
UNITED STATES PATENT AND TRADEMARK OFFICE
P.O. BOX 1450
ALEXANDRIA, VA 22313-1450
www.uspto.gov

Paper No. 13

Albert S. Michalik
Law Offices of Albert S. Michalik, PLLC
704 – 228th Avenue NE
Suite 193
Sammamish, WA 98074

In re Application of: Capps et al.	)	
Application No. 09/502,970	)	**DECISION ON PETITION TO**
Attorney Docket No. 2300	)	**WITHDRAW HOLDING OF**
Filed: February 11, 1000	)	**ABANDONMENT UNDER 37 CFR**
For: UNIFIED NAVIGATION SHELL	)	**§1.181 (A)**
USER INTERFACE	)	

This is a decision on the request for reconsideration, filed September 12, 2003, requesting the Withdrawal of the Holding of Abandonment of the above-identified application. The request is being treated as a petition under 37 CFR §1.181. This application was held abandoned for failure to file a timely response to the restriction requirement mailed July 2, 2002. A Notice of Abandonment was mailed on March 25, 2003 (Paper No. 8).

In the request for reconsideration, applicants' representative has supplemented the original petition with a statement that a change of address was filed prior to July 2, 2002, but that the practitioner has no evidence of that change being filed other than the Office mailing of March 25, 2003 (the Notice of Abandonment) which was addressed to an improper address in "Sammaish" Washington. The practitioner also states the mail delivered to the previous Bellevue address was being forwarded, but that the Office communication of July 2, 2002 was not received by the practitioner.

A review of the application file in conjunction with the practitioner's statements establishes an apparent irregularity associated with the initial mailing of the restriction requirement. The communication has two cover letters, one dated July 2, 2002 addressed to Bellevue WA and a second dated August 5, 2002 addressed to Sammaish [sic] WA. There is nothing in the record to explain why two possible mailings occurred of the same letter. In addition, it is clear the second mailing and the Notice of Abandonment were sent to an address similar to the intended address, but enough at variance that the restriction requirement might not have been received by the practitioner even though the Notice of Abandonment was. Due to an obvious clerical error, the practitioner's change of address was not properly processed.

Because of these irregularities in Office procedure the presumption of receipt in accordance with the guidelines set forth in MPEP § 711.03(c) has been overcome.

The petition is **GRANTED**. The holding of abandonment is withdrawn.

The application file will be forwarded to the Technology Center support staff. The restriction requirement will be remailed with the one month period for reply restarted to run from the date of the remailing. Telephone inquiries should be directed to the undersigned at (703) 308-0269.

Josie A. Ballato
Special Programs Examiner
Technology Center 2100
Computer Architecture, Software, and Information Security

OIPE JC95
SEP 1 2 2003
PATENT & TRADEMARK OFFICE

#12 2174

PATENT
Attorney Docket No. 2300

IN THE UNITED STATES PATENT AND TRADEMARK OFFICE

In re Application of:

CAPPS et al. Group Art Unit: 2174

Serial No. 09/502,970 Examiner: KE, P.

Filed: February 11, 2000

For: Unified Navigation Shell User Interface

REQUEST FOR RECONSIDERATION OF DECISION ON PETITION TO WITHDRAW THE HOLDING OF ABANDONMENT UNDER 37 § C.F.R. 1.181(A)

RECEIVED
SEP 1 6 2003
Technology Center 2100

Commissioner for Patents
Alexandria, VA 22313-1450

Attn:

Dear Sir:

Petitioner hereby requests reconsideration of the denial to grant the petition to withdraw the holding of abandonment in this matter. Petitioner submits that that the Office communication on which the holding of abandonment is based was not, and could not in fact have been received by Petitioner, through no fault of Petitioner, for at least the additional reasons set forth in the Supplemental Statement of Facts set forth below. No fee is required.

Supplemental Statement of Facts

1. On March 25, 2003, a Notice of Abandonment was mailed to Petitioner (the undersigned attorney for applicants), addressed to 220 Eighth Avenue 704, Suite 193 Sammamish, Washington 98074 (which is an incorrect address). The basis for the Notice was that no timely response was filed to an Office communication (a restriction requirement) mailed July 2, 2002.

2. On May 19, 2003 Petitioner petitioned for a withdrawal of the holding of abandonment, and provided evidence indicating that the Office communication was not received by practitioner, and that a search of the file jacket and docket records was conducted and indicated that the Office communication was not received. A copy of the docket record was provided, along with several references thereto in practitioner's (Petitioner's) statement of facts, pursuant to MPEP §711.03(c).

3. On July 28, 2003, a Decision was mailed denying the petition, because the evidence apparently should have directed as to why the mailing was not received at Petitioner's prior Bellevue address. However, Petitioner had not seen a copy of the July 2, 2002 Office communication, and thus had no way of knowing that the Office communication was mailed to the Bellevue address. The Patent Office obtained Petitioner's Sammamish address from *somewhere*, as evidenced by the Notice of Abandonment having been mailed to Sammamish, (albeit to a variation of applicants' correct address), and Petitioner thus presumed that because the Notice of Abandonment was mailed to a variation of applicants' Sammamish address, that the address submitted in the change of address form filed in the case (prior to July 2, 2002) was received but incorrectly entered at the Patent Office, thereby causing the problem.

4. Petitioner has thoroughly considered what might have happened to cause the Office communication to not have been delivered to Petitioner, and can only think of two possible scenarios, neither of which are any fault of Petitioner.

   a. The change of address form (mailed in a group with a number of others prior to July 2, 2002) was delayed or lost in the mail or in its processing (or possibly not processed at all), and as a result the July 2, 2002 Office communication was mailed to Petitioner's Bellevue address. Petitioner has been unable to find concrete evidence that this particular change of address request was timely processed at the Patent Office; a search of Petitioner's files shows that the enclosed postcard was not returned. However as Petitioner filed no other correspondence in this matter (until the prior Petition), Petitioner submits that it appears that the Patent Office did at some time obtain Petitioner's Sammamish address, otherwise the Notice of Abandonment would not have been spontaneously sent to Sammamish, WA.

   b. Notwithstanding, even if the Office communication was in fact mailed to Petitioner's Bellevue address, then the Post Office should have forwarded it to 704 228th Avenue NE, Suite 193 Sammamish Washington 98074. Petitioner declares that the Post Office was instructed to forward all mail addressed to the Bellevue, WA address to Petitioner's Sammamish address in late May 2002 (well in advance of the July 2, 2002 mailing date of the Office communication); this forwarding address continues to today, as evidenced by a copy of an unrelated envelope recently mailed to Petitioner's former Bellevue address and properly forwarded to Petitioner's correct Sammamish address). If indeed sent to Petitioner's former Bellevue address, then a Postal error also occurred, as no such forwarding ever took place, and Petitioner did not receive the Office communication.

5. Regardless of whether sent to Bellevue or to an erroneous address in Sammamish, Petitioner did nothing incorrect, and either a Patent Office or Post Office error (or both) was responsible for Petitioner not having received the Office communication.

6. I hereby declare that all statements made herein of my own knowledge are true, that all statements made on information and belief are believed to be true; and further that these

statements were made with the knowledge that willful false statements and the like so made are punishable by fine or imprisonment, or both, under Section 1001 of Title 18 of the United States Code and that such willful false statements may jeopardize the validity of the application or any patent issued thereon.

For at least the foregoing reasons, Petitioner submits that the petition to withdraw the holding of abandonment be granted, and requests that the Office action be re-mailed.

Respectfully submitted,

Albert S. Michalik

Albert S. Michalik, Registration No. 37,395
Attorney for Applicants
Law Offices of Albert S. Michalik, PLLC
704 - 228th Avenue NE
Suite 193
Sammamish, WA 98074
(425) 836-3030 (telephone)
(425) 836-8957 (facsimile)

Date: September 9, 2003

In re Application of: CAPPS et al
Serial No. 09/502,970

OIPE JC95
SEP 1 2 2003
PATENT & TRADEMARK OFFICE

CERTIFICATE OF MAILING

I hereby certify that this REQUEST FOR RECONSIDERATION along with supporting evidence is being deposited with the United States Postal Service on the date shown below with sufficient postage as first class mail in an envelope addressed to: Commissioner for Patents, PO Box 1450, Alexandria, Virginia 22313-1450.

Date: September 9, 2003

Albert S. Michalik

RECEIVED
SEP 1 6 2003
Technology Center 2100

UNITED STATES PATENT AND TRADEMARK OFFICE

COMMISSIONER FOR PATENTS
UNITED STATES PATENT AND TRADEMARK OFFICE
WASHINGTON, D.C. 20231
www.uspto.gov

COPY MAILED Paper No. 6

SCULLY SCOTT MURPHY & PRESSER
400 GARDEN CITY PLAZA
GARDEN CITY , NY 11530

DEC 2 1 2000

OFFICE OF PETITIONS
A/C PATENTS

In re Application of
Mantor, Carey, Taylor, Piazza, Potter, and Socarras
Application No. 09/502,994
Filed: February 11, 2000
Attorney Docket No. 11142
For: 3-D RENDERING TEXTURE CACHING MACHINE

DECISION ACCORDING STATUS UNDER 37 CFR 1.47(a)

This is in response to the "Petition Under 37 CFR 1.47(a)," filed November 3, 2000.

The petition is **GRANTED.**

Petitioner has shown that the non-signing inventors have refused to join in the filing of the above-identified application after having been presented with the application papers. Specifically, the declaration/statement of facts of Paul J. Esatto, Jr., and written refusal of Lindley J. Brenza, counsel for the non-signing inventors, establishes that the inventors were mailed the application papers, including the specification, claims and drawings, but refused to sign the declaration.

The above-identified application and papers have been reviewed and found in compliance with 37 CFR 1.47(a). This application is hereby accorded Rule 1.47(a) status.

As provided in Rule 1.47(a), this Office will forward notice of this application's filing to the non-signing inventor at the address given in the petition. Notice of the filing of this application will also be published in the Official Gazette.

The application will be forwarded to Technology Center 2100.

Telephone inquiries should be directed to Petitions Attorney, Jennifer M. Hayes, at (703) 306-5608.

Jennifer M. Hayes
Attorney Advisor
Office of Petitions
Office of the Deputy Commissioner
for Patent Examination Policy

for

Beverly M. Flanagan
Supervisory Petitions Examiner
Office of Petitions
Office of the Deputy Commissioner
for Patent Examination Policy

UNITED STATES PATENT AND TRADEMARK OFFICE

COMMISSIONER FOR PATENTS
UNITED STATES PATENT AND TRADEMARK OFFICE
WASHINGTON, D.C. 20231
www.uspto.gov

Michael Mantor
4318 Saddle Creek Place
Orlando, FL 32829

COPY MAILED

DEC 2 1 2000

OFFICE OF PETITIONS
A/C PATENTS

In re Application of
Mantor, Carey, Taylor, Piazza, Potter, and Socarras
Application No. 09/502,994
Filed: February 11, 2000
Attorney Docket No. 11142
For: 3-D RENDERING TEXTURE CACHING MACHINE

: LETTER

Dear Mr. Mantor:

You are named as a joint inventor in the above identified United States patent application, filed under the provisions of 35 U.S.C. 116 (United States Code), and 37 CFR 1.47(a), Rules of Practice in Patent Cases. Should a patent be granted on the application you will be designated therein as a joint inventor.

As a named inventor you are entitled to inspect any paper in the file wrapper of the application, order copies of all or any part thereof (at a prepaid cost per 37 CFR 1.19) or make your position of record in the application. Alternatively, you may arrange to do any of the preceding through a registered patent attorney or agent presenting written authorization from you. If you care to join the application, counsel of record (see below) would presumably assist you. Joining in the application would entail the filing of an appropriate oath or declaration by you pursuant to 37 CFR 1.63.

Requests for information regarding your application should be directed to the File Information Unit at (703)308-2733. Information regarding how to pay for and order a copy of the application, or a specific paper in the application, should be directed to Certification Division at (703)308-9726 or 1(800)972-6382 (outside the Washington D.C. area).

Telephone inquiries regarding this communication should be directed to Petitions Attorney Jennifer M. Hayes at (703) 306-5608.

Jennifer M. Hayes
Attorney Advisor
Office of Petitions
Office of the Deputy Commissioner
for Patent Examination Policy

For

Beverly M. Flanagan
Supervisory Petitions Examiner
Office of Petitions
Office of the Deputy Commissioner
for Patent Examination Policy

cc: Scully Scott Murphy & Presser
400 Garden City Plaza
Garden City , NY 11530

UNITED STATES PATENT AND TRADEMARK OFFICE

COMMISSIONER FOR PATENTS
UNITED STATES PATENT AND TRADEMARK OFFICE
WASHINGTON, D.C. 20231
www.uspto.gov

John Austin Carey
840 Benchwood Court
Winter Springs, FL 32708

COPY MAILED

DEC 2 1 2000

OFFICE OF PETITIONS
A/C PATENTS

In re Application of
Mantor, Carey, Taylor, Piazza, Potter, and Socarras
Application No. 09/502,994
Filed: February 11, 2000
Attorney Docket No. 11142
For: 3-D RENDERING TEXTURE CACHING MACHINE

: LETTER

Dear Mr. Carey:

You are named as a joint inventor in the above identified United States patent application, filed under the provisions of 35 U.S.C. 116 (United States Code), and 37 CFR 1.47(a), Rules of Practice in Patent Cases. Should a patent be granted on the application you will be designated therein as a joint inventor.

As a named inventor you are entitled to inspect any paper in the file wrapper of the application, order copies of all or any part thereof (at a prepaid cost per 37 CFR 1.19) or make your position of record in the application. Alternatively, you may arrange to do any of the preceding through a registered patent attorney or agent presenting written authorization from you. If you care to join the application, counsel of record (see below) would presumably assist you. Joining in the application would entail the filing of an appropriate oath or declaration by you pursuant to 37 CFR 1.63.

Requests for information regarding your application should be directed to the File Information Unit at (703)308-2733. Information regarding how to pay for and order a copy of the application, or a specific paper in the application, should be directed to Certification Division at (703)308-9726 or 1(800)972-6382 (outside the Washington D.C. area).

Telephone inquiries regarding this communication should be directed to Petitions Attorney Jennifer M. Hayes at (703) 306-5608.

Jennifer M. Hayes
Attorney Advisor
Office of Petitions
Office of the Deputy Commissioner
for Patent Examination Policy

Beverly M. Flanagan
Supervisory Petitions Examiner
Office of Petitions
Office of the Deputy Commissioner
for Patent Examination Policy

cc: Scully Scott Murphy & Presser
400 Garden City Plaza
Garden City , NY 11530

UNITED STATES PATENT AND TRADEMARK OFFICE

COMMISSIONER FOR PATENTS
UNITED STATES PATENT AND TRADEMARK OFFICE
WASHINGTON, D.C. 20231
www.uspto.gov

Ralph Clayton Taylor
1548 Rockwell Heights
Deland, FL 32724

COPY MAILED

DEC 2 1 2000

OFFICE OF PETITIONS
A/C PATENTS

In re Application of
Mantor, Carey, Taylor, Piazza, Potter, and Socarras
Application No. 09/502,994
Filed: February 11, 2000
Attorney Docket No. 11142
For: 3-D RENDERING TEXTURE CACHING MACHINE

: LETTER

Dear Mr. Taylor:

You are named as a joint inventor in the above identified United States patent application, filed under the provisions of 35 U.S.C. 116 (United States Code), and 37 CFR 1.47(a), Rules of Practice in Patent Cases. Should a patent be granted on the application you will be designated therein as a joint inventor.

As a named inventor you are entitled to inspect any paper in the file wrapper of the application, order copies of all or any part thereof (at a prepaid cost per 37 CFR 1.19) or make your position of record in the application. Alternatively, you may arrange to do any of the preceding through a registered patent attorney or agent presenting written authorization from you. If you care to join the application, counsel of record (see below) would presumably assist you. Joining in the application would entail the filing of an appropriate oath or declaration by you pursuant to 37 CFR 1.63.

Requests for information regarding your application should be directed to the File Information Unit at (703)308-2733. Information regarding how to pay for and order a copy of the application, or a specific paper in the application, should be directed to Certification Division at (703)308-9726 or 1(800)972-6382 (outside the Washington D.C. area).

Telephone inquiries regarding this communication should be directed to Petitions Attorney Jennifer M. Hayes at (703) 306-5608.

Jennifer M. Hayes
Attorney Advisor
Office of Petitions
Office of the Deputy Commissioner
for Patent Examination Policy

Beverly M. Flanagan
Supervisory Petitions Examiner
Office of Petitions
Office of the Deputy Commissioner
for Patent Examination Policy

cc: Scully Scott Murphy & Presser
400 Garden City Plaza
Garden City , NY 11530

UNITED STATES
PATENT AND
TRADEMARK OFFICE

Under Secretary of Commerce for Intellectual Property and
Director of the United States Patent and Trademark Office
Washington, DC 20231
www.USPTO.gov

Paper No. 7

Jay L. Chaskin
General Electric Company
3135 Easton Turnpike
Fairfield, CT 06431

COPY MAILED

JAN 1 7 2002

OFFICE OF PETITIONS

In re Application of :
Vladislav Boutenko, et. al. :
Application No. 09/503,022 :
Filed: February 14, 2000 :
Attorney Docket No. 14XZ00055 :

ON PETITION

This is a decision on the petition under 37 CFR 1.137(b), filed January 10, 2002 to revive the above-identified application.

The petition is **GRANTED**.

The above-identified application became abandoned for failure to reply in a timely manner to the Notice to File Missing Parts of Application (Notice) mailed April 27, 2000. The Notice set a period for reply of two (2) months from the mail date of the Notice. No extensions of time under the provisions of 37 CFR 1.136(a) were obtained. Accordingly, the above-identified application became abandoned after midnight June 27, 2000.

This application is being forwarded to the Office of Initial Patent Examination for further processing.

Telephone inquiries regarding this decision may be directed to Andrea Coram at (703) 308-6711.

Andrea Coram
Petitions Examiner
Office of Petitions
Office of the Deputy Commissioner
for Patent Examination Policy

January 16, 2002

Per telephone conversation with the attorney of record, Jay Chaskin and the undersigned, $130.00 surcharge for late filing of the Oath/Declaration will be charged to petitioner's deposit account.

Andrea Coram
Petitions Examiner
Office of Petitions

SPE RESPONSE FOR CERTIFICATE OF CORRECTION

Paper No.: _____

DATE : 6/29/09

TO SPE OF : ART UNIT 2191

SUBJECT : Request for Certificate of Correction for Appl. No.: 09503215 Patent No.: 6996808 B1

Please respond to this request for a certificate of correction within 7 days.

FOR IFW FILES:

Please review the requested changes/corrections as shown in the **COCIN** document(s) in the IFW application image. No new matter should be introduced, nor should the scope or meaning of the claims be changed.

Please complete the response (see below) and forward the completed response to scanning using document code **COCX**.

FOR PAPER FILES:

Please review the requested changes/corrections as shown in the attached certificate of correction. Please complete this form (see below) and forward it with the file to:

Certificates of Correction Branch (C of C)
Randolph Square 9D40-D
Palm Location 7580

You can fax the Directors/SPE response to 571-270-9990

Lamonte Newsome

Certificates of Correction Branch

703-756-1574

Thank You For Your Assistance

The request for issuing the above-identified correction(s) is hereby:
Note your decision on the appropriate box.

- ☒ **Approved** — **All** changes apply.
- ☐ **Approved in Part** — Specify below which changes **do not** apply.
- ☐ **Denied** — State the reasons for denial below.

Comments: _____

SPE RESPONSE FOR CERTIFICATE OF CORRECTION

SPE WEI Y. ZHEN Art Unit 2191

UNITED STATES PATENT AND TRADEMARK OFFICE

Commissioner for Patents
United States Patent and Trademark Office
P.O. Box 1450
Alexandria, VA 22313-1450
www.uspto.gov

Date Mailed : January 3, 2008

Patent No. :6,610,166
Inventor :Brian Harden, et al.
Patent Issued :August 26, 2003
Title :METHOD FOR REPPLICATING OPTICAL ELEMENTS, PARTICULARLY ON AWAFER
:LEVEL, AND REPLICAS FORMED THEREBY

Re: Request for Certificate of Correction

Consideration has been given your request for the issuance of a certificate of correction for the above-identified patent under the provisions of Rule(s) 1.322.

Inspection of the application for the patent reveals that in connection with the alleged error pertaining to Item (62) Related U.S. Application Data; applicant originally claimed benefit to 08/727837 in the application as filed February 14, 2000. Applicant agreed to delete the reference to the prior application in an interview with the examiner on March 26, 2003 and to incorporate this change by examiner's amendment and so did not originally fail to make reference or make an incorrect reference. There being no fault on the part of the Patent and Trademark Office, it has no authority to a issue certificate of correction under the provisions of 35 U.S.C. 254 and Rule 322 of the Rules of Practice of the United States Patent and Trademark Office in Patent Cases.

In view of the foregoing applicants request in this matter is hereby denied.

Any telephone inquiry concerning this communication should be directed to Ms. A. Green at (703) 308-9380 ext. 123.

Mary Diggs, Supervisor
Decisions & Certificates
of Correction Branch
(703) 308-9390 or (703) 308-

Lee & Morse PC
3141 Fairview Park Drive,
Ste 500
Falls Church, VA 22202

CBN/arg

UNITED STATES PATENT AND TRADEMARK OFFICE

Commissioner for Patents
United States Patent and Trademark Office
P.O. Box 1450
Alexandria, VA 22313-1450
www.uspto.gov

In re Patent No. 6538597
Issue Date: March 25,2003
Application No. 09503267
Filed: February 14,2000
Attorney Docket No. RTN-067AUS

:
:DECISION GRANTING PETITION
:UNDER 37 CFR 1.378(c)
:

This is a decision on the electronic petition, filed June 25,2007 ,under 37 CFR 1.378(c) to accept the unintentionally delayed payment of the 3.5 year maintenance fee for the above-identified patent.

The petition is GRANTED.

The maintenance fee is accepted, and the above-identified patent reinstated as of June 25,2007 . This decision also constitutes notice that the fee has been accepted. An electronic copy of the petition and this decision has been created as an entry in an Image File Wrapper. Nevertheless, petitioner should print and retain an independent copy

Telephone inquires related to this electronic decision should be directed to the Electronic Business Center at 1-866-217-9197.

Approved for use through 04/30/2009. OMB 0651-0016
U.S. Patent and Trademark Office: U.S. DEPARTMENT OF COMMERCE
Under the Paperwork Reduction Act of 1995, no persons are required to respond to a collection of information unless it displays valid OMB control number.

PETITION TO ACCEPT UNINTENTIONALLY DELAYED PAYMENT OF MAINTENANCE FEE IN AN EXPIRED PATENT (37 CFR 1.378(c))

Patent Number	Issue Date (YYYY-MM-DD)	Application Number	Filing Date (YYYY-MM-DD)	Docket Number (if applicable)
6,538,597	2003-03-25	09/503,267	2000-02-14	RTN-067AUS

CAUTION: Maintenance fee (and surcharge, if any) payment must correctly identify: (1) the patent number and (2) the application number of the actual U.S. application leading to issuance of that patent to ensure the fee(s) is/are associated with the correct patent. 37 CFR 1.366(c) and (d).

SMALL ENTITY
☐ Patentee claims, or has previously claimed, small entity status. See 37 CFR 1.27.

LOSS OF ENTITLEMENT TO SMALL ENTITY STATUS
☐ Patentee is no longer entitled to small entity status. See 37 CFR 1.27(g)

NOT Small Entity		Small Entity	
Fee	Code	Fee	Code
◉ 3 ½ year	(1551)	○ 3 ½ year	(2551)
○ 7 ½ year	(1552)	○ 7 ½ year	(2552)
○ 11 ½ year	(1553)	○ 11 ½ year	(2553)

SURCHARGE
The surcharge required by 37 CFR 1.20(i)(2) (Fee Code 1558) must be paid as a condition of accepting unintentionally delayed payment of the maintenance fee.

MAINTENANCE FEE (37 CFR 1.20(e)-(g))
The appropriate maintenance fee must be submitted with this petition.

STATEMENT
THE UNDERSIGNED CERTIFIES THAT THE DELAY IN PAYMENT OF THE MAINTENANCE FEE TO THIS PATENT WAS UNINTENTIONAL

PETITIONER(S) REQUEST THAT THE DELAYED PAYMENT OF THE MAINTENANCE FEE BE ACCEPTED AND THE PATENT REINSTATED

THIS PORTION MUST BE COMPLETED BY THE SIGNATORY OR SIGNATORIES

37 CFR 1.378(d) states: "Any petition under this section must be signed by an attorney or agent registered to practice before the Patent and Trademark Office, or by the patentee, the assignee, or other party in interest."

I certify, in accordance with 37 CFR 1.4(d)(4) that I am

◉ An attorney or agent registered to practice before the Patent and Trademark Office

○ A sole patentee

○ A joint patentee; I certify that I am authorized to sign this submission on behalf of all the other patentees.

○ A joint patentee; all of whom are signing this e-petition

○ The assignee of record of the entire interest

Patent Practitioner			
A signature of the applicant or representative is required in accordance with 37 CFR 1.33 and 10.18. Please see 37 CFR 1.4(d) for the form of the signature			
Signature	/Donald F. Mofford/	Date (YYYY-MM-DD)	2007-06-25
Name	Donald F. Mofford, Esq.	Registration Number	33740

This collection of information is required by 37 CFR 1.378(c). The information is required to obtain or retain a benefit by the public which is to file (and by the USPTO to process) an application. Confidentiality is governed by 35 U.S.C. 122 and 37 CFR 1.11 and 1.14. This collection is estimated to take 1 hour to complete, including gathering, preparing, and submitting the completed application form to the USPTO. Time will vary depending upon the individual case. Any comments on the amount of time you require to complete this form and/ or suggestions for reducing this burden, should be sent to the Chief Information Officer, U.S. Patent and Trademark Office, U.S. Department of Commerce, P.O. Box 1450, Alexandria, VA 22313-1450. DO NOT SEND FEES OR COMPLETED FORMS TO THIS ADDRESS. **This form can only be used when in conjunction with EFS-Web. If this form is mailed to the USPTO, it may cause delays in reinstating the patent.**

Privacy Act Statement

The Privacy Act of 1974 (P.L. 93-579) requires that you be given certain information in connection with your submission of the attached form related to a patent application or patent. Accordingly, pursuant to the requirements of the Act, please be advised that: (1) the general authority for the collection of this information is 35 U.S.C. 2(b)(2); (2) furnishing of the information solicited is voluntary; and (3) the principal purpose for which the information is used by the U.S. Patent and Trademark Office is to process and/or examine your submission related to a patent application or patent. If you do not furnish the requested information, the U.S. Patent and Trademark Office may not be able to process and/or examine your submission, which may result in termination of proceedings or abandonment of the application or expiration of the patent.

The information provided by you in this form will be subject to the following routine uses:

1. The information on this form will be treated confidentially to the extent allowed under the Freedom of Information Act (5 U.S.C. 552) and the Privacy Act (5 U.S.C. 552a). Records from this system of records may be disclosed to the Department of Justice to determine whether the Freedom of Information Act requires disclosure of these record s.

2. A record from this system of records may be disclosed, as a routine use, in the course of presenting evidence to a court, magistrate, or administrative tribunal, including disclosures to opposing counsel in the course of settlement negotiations.

3. A record in this system of records may be disclosed, as a routine use, to a Member of Congress submitting a request involving an individual, to whom the record pertains, when the individual has requested assistance from the Member with respect to the subject matter of the record.

4. A record in this system of records may be disclosed, as a routine use, to a contractor of the Agency having need for the information in order to perform a contract. Recipients of information shall be required to comply with the requirements of the Privacy Act of 1974, as amended, pursuant to 5 U.S.C. 552a(m).

5. A record related to an International Application filed under the Patent Cooperation Treaty in this system of records may be disclosed, as a routine use, to the International Bureau of the World Intellectual Property Organization, pursuant to the Patent Cooperation Treaty.

6. A record in this system of records may be disclosed, as a routine use, to another federal agency for purposes of National Security review (35 U.S.C. 181) and for review pursuant to the Atomic Energy Act (42 U.S.C. 218(c)).

7. A record from this system of records may be disclosed, as a routine use, to the Administrator, General Services, or his/her designee, during an inspection of records conducted by GSA as part of that agency's responsibility to recommend improvements in records management practices and programs, under authority of 44 U.S.C. 2904 and 2906. Such disclosure shall be made in accordance with the GSA regulations governing inspection of records for this purpose, and any other relevant (i.e., GSA or Commerce) directive. Such disclosure shall not be used to make determinations about individuals.

8. A record from this system of records may be disclosed, as a routine use, to the public after either publication of the application pursuant to 35 U.S.C. 122(b) or issuance of a patent pursuant to 35 U.S.C. 151. Further, a record may be disclosed, subject to the limitations of 37 CFR 1.14, as a routine use, to the public if the record was filed in an application which became abandoned or in which the proceedings were terminated and which application is referenced by either a published application, an application open to public inspections or an issued patent.

9. A record from this system of records may be disclosed, as a routine use, to a Federal, State, or local law enforcement agency, if the USPTO becomes aware of a violation or potential violation of law or regulation.

UNITED STATES PATENT AND TRADEMARK OFFICE

Commissioner for Patents
United States Patent and Trademark Office
P.O. Box 1450
Alexandria, VA 22313-1450
www.uspto.gov

In re Patent No. 6401075
Issue Date: June 4,2002
Application No. 09503275
Filed: February 14,2000
Attorney Docket No. 1400-2

:
:DECISION GRANTING PETITION
:UNDER 37 CFR 1.378(c)
:

This is a decision on the electronic petition, filed March 20,2007 ,under 37 CFR 1.378(c) to accept the unintentionally delayed payment of the 3.5 year maintenance fee for the above-identified patent.

The petition is GRANTED.

The maintenance fee is accepted, and the above-identified patent reinstated as of March 20,2007 . This decision also constitutes notice that the fee has been accepted. An electronic copy of the petition and this decision has been created as an entry in an Image File Wrapper. Nevertheless, petitioner should print and retain an independent copy

Telephone inquires related to this electronic decision should be directed to the Electronic Business Center at 1-866-217-9197.

Under the Paperwork Reduction Act of 1995, no persons are required to respond to a collection of information unless it displays valid OMB control number.

PETITION TO ACCEPT UNINTENTIONALLY DELAYED PAYMENT OF MAINTENANCE FEE IN AN EXPIRED PATENT (37 CFR 1.378(c))

Patent Number	Issue Date (YYYY-MM-DD)	Application Number	Filing Date (YYYY-MM-DD)	Docket Number (if applicable)
6,401,075	2002-06-04	09/503,275	2000-02-14	1400-2

CAUTION: Maintenance fee (and surcharge, if any) payment must correctly identify: (1) the patent number and (2) the application number of the actual U.S. application leading to issuance of that patent to ensure the fee(s) is/are associated with the correct patent. 37 CFR 1.366(c) and (d).

SMALL ENTITY
☒ Patentee claims, or has previously claimed, small entity status. See 37 CFR 1.27.

LOSS OF ENTITLEMENT TO SMALL ENTITY STATUS
☐ Patentee is no longer entitled to small entity status. See 37 CFR 1.27(g)

NOT Small Entity		Small Entity	
Fee	Code	Fee	Code
○ 3 ½ year	(1551)	◉ 3 ½ year	(2551)
○ 7 ½ year	(1552)	○ 7 ½ year	(2552)
○ 11 ½ year	(1553)	○ 11 ½ year	(2553)

SURCHARGE
The surcharge required by 37 CFR 1.20(i)(2) (Fee Code 1558) must be paid as a condition of accepting unintentionally delayed payment of the maintenance fee.

MAINTENANCE FEE (37 CFR 1.20(e)-(g))
The appropriate maintenance fee must be submitted with this petition.

STATEMENT
THE UNDERSIGNED CERTIFIES THAT THE DELAY IN PAYMENT OF THE MAINTENANCE FEE TO THIS PATENT WAS UNINTENTIONAL

PETITIONER(S) REQUEST THAT THE DELAYED PAYMENT OF THE MAINTENANCE FEE BE ACCEPTED AND THE PATENT REINSTATED

THIS PORTION MUST BE COMPLETED BY THE SIGNATORY OR SIGNATORIES

37 CFR 1.378(d) states: "Any petition under this section must be signed by an attorney or agent registered to practice before the Patent and Trademark Office, or by the patentee, the assignee, or other party in interest."

I certify, in accordance with 37 CFR 1.4(d)(4) that I am

◉ An attorney or agent registered to practice before the Patent and Trademark Office

○ A sole patentee

○ A joint patentee; I certify that I am authorized to sign this submission on behalf of all the other patentees.

○ A joint patentee; all of whom are signing this e-petition

○ The assignee of record of the entire interest

Patent Practitioner			
A signature of the applicant or representative is required in accordance with 37 CFR 1.33 and 10.18. Please see 37 CFR 1.4(d) for the form of the signature			
Signature	/Daniel P. Burke/	Date (YYYY-MM-DD)	2007-03-20
Name	Daniel P. Burke	Registration Number	30735

This collection of information is required by 37 CFR 1.378(c). The information is required to obtain or retain a benefit by the public which is to file (and by the USPTO to process) an application. Confidentiality is governed by 35 U.S.C. 122 and 37 CFR 1.11 and 1.14. This collection is estimated to take 1 hour to complete, including gathering, preparing, and submitting the completed application form to the USPTO. Time will vary depending upon the individual case. Any comments on the amount of time you require to complete this form and/ or suggestions for reducing this burden, should be sent to the Chief Information Officer, U.S. Patent and Trademark Office, U.S. Department of Commerce, P.O. Box 1450, Alexandria, VA 22313-1450. DO NOT SEND FEES OR COMPLETED FORMS TO THIS ADDRESS. **This form can only be used when in conjunction with EFS-Web. If this form is mailed to the USPTO, it may cause delays in reinstating the patent.**

Privacy Act Statement

The Privacy Act of 1974 (P.L. 93-579) requires that you be given certain information in connection with your submission of the attached form related to a patent application or patent. Accordingly, pursuant to the requirements of the Act, please be advised that: (1) the general authority for the collection of this information is 35 U.S.C. 2(b)(2); (2) furnishing of the information solicited is voluntary; and (3) the principal purpose for which the information is used by the U.S. Patent and Trademark Office is to process and/or examine your submission related to a patent application or patent. If you do not furnish the requested information, the U.S. Patent and Trademark Office may not be able to process and/or examine your submission, which may result in termination of proceedings or abandonment of the application or expiration of the patent.

The information provided by you in this form will be subject to the following routine uses:

1. The information on this form will be treated confidentially to the extent allowed under the Freedom of Information Act (5 U.S.C. 552) and the Privacy Act (5 U.S.C. 552a). Records from this system of records may be disclosed to the Department of Justice to determine whether the Freedom of Information Act requires disclosure of these record s.

2. A record from this system of records may be disclosed, as a routine use, in the course of presenting evidence to a court, magistrate, or administrative tribunal, including disclosures to opposing counsel in the course of settlement negotiations.

3. A record in this system of records may be disclosed, as a routine use, to a Member of Congress submitting a request involving an individual, to whom the record pertains, when the individual has requested assistance from the Member with respect to the subject matter of the record.

4. A record in this system of records may be disclosed, as a routine use, to a contractor of the Agency having need for the information in order to perform a contract. Recipients of information shall be required to comply with the requirements of the Privacy Act of 1974, as amended, pursuant to 5 U.S.C. 552a(m).

5. A record related to an International Application filed under the Patent Cooperation Treaty in this system of records may be disclosed, as a routine use, to the International Bureau of the World Intellectual Property Organization, pursuant to the Patent Cooperation Treaty.

6. A record in this system of records may be disclosed, as a routine use, to another federal agency for purposes of National Security review (35 U.S.C. 181) and for review pursuant to the Atomic Energy Act (42 U.S.C. 218(c)).

7. A record from this system of records may be disclosed, as a routine use, to the Administrator, General Services, or his/her designee, during an inspection of records conducted by GSA as part of that agency's responsibility to recommend improvements in records management practices and programs, under authority of 44 U.S.C. 2904 and 2906. Such disclosure shall be made in accordance with the GSA regulations governing inspection of records for this purpose, and any other relevant (i.e., GSA or Commerce) directive. Such disclosure shall not be used to make determinations about individuals.

8. A record from this system of records may be disclosed, as a routine use, to the public after either publication of the application pursuant to 35 U.S.C. 122(b) or issuance of a patent pursuant to 35 U.S.C. 151. Further, a record may be disclosed, subject to the limitations of 37 CFR 1.14, as a routine use, to the public if the record was filed in an application which became abandoned or in which the proceedings were terminated and which application is referenced by either a published application, an application open to public inspections or an issued patent.

9. A record from this system of records may be disclosed, as a routine use, to a Federal, State, or local law enforcement agency, if the USPTO becomes aware of a violation or potential violation of law or regulation.

UNITED STATES PATENT AND TRADEMARK OFFICE

COMMISSIONER FOR PATENTS
UNITED STATES PATENT AND TRADEMARK OFFICE
P.O. BOX 1450
ALEXANDRIA, VA 22313-1450
www.uspto.gov

Ted R. Rittmaster, Esq.
Foley & Lardner
2029 Century Park East, Suite 3500
Los Angeles, CA 90067-3021

COPY MAILED

OCT 13 2004

OFFICE OF PETITIONS

In re Application of :
Dung Le Huynh, et al. :
Application No. 09/503,282 : ON PETITION
Filed: February 14, 2000 :
Attorney Docket No. 621-329 RCE :

This is a decision on the petition under 37 CFR 1.137(b), filed June 16, 2004, to revive the above-identified application.

The petition is **GRANTED**.

Telephone inquiries concerning this decision should be directed to the undersigned at (571) 272-3223.

There is no indication that the person signing the instant petition was ever given a power of attorney or authorization of agent to prosecute the above-identified application. However, in accordance with 37 CFR 1.34(a), the signature of Gerald Bodner appearing on the petition shall constitute a representation to the United States Patent and Trademark Office that he is authorized to represent the particular party in whose behalf he acts. However, if Mr. Bodner desires to receive future correspondence regarding this application, the appropriate power of attorney or authorization of agent must be submitted. A courtesy copy of this decision is being mailed to petitioner. Nevertheless, all future correspondence regarding this application file will be directed solely to the address of record until otherwise instructed.

The application file is being forwarded to Technology Center 2100 for processing the Request for Continued Examination (RCE) under 37 CFR 1.114 filed with the instant petition.

Marianne E. Jenkins

Marianne E. Jenkins
Petitions Examiner
Office of Petitions
Office of the Deputy Commissioner
for Patent Examination Policy

cc: Gerald T. Bodner
Bodner & O'Rourke, L.L.P.
425 Broadhollow Road, Suite 108
Melville, NY 11747

UNITED STATES PATENT AND TRADEMARK OFFICE

COMMISSIONER FOR PATENTS
UNITED STATES PATENT AND TRADEMARK OFFICE
P.O. BOX 1450
ALEXANDRIA, VA 22313-1450
WWW.USPTO.GOV

Paper No. 15

GARDNER CARTON & DOUGLAS LLP
ATTN: PATENT DOCKET DEPT.
191 N. WACKER DRIVE, SUITE 3700
CHICAGO IL 60606

COPY MAILED

OCT 0 3 2005

OFFICE OF PETITIONS

In re Application of
Neil Owen Anderson et al.
Application No. 09/503,380
Filed: February 14, 2000
Attorney Docket No. BAL6019P0190US
Title: CHRYSANTHEMUM PLANT
NAMED 95-157-6

DECISION GRANTING
PETITION UNDER 37 C.F.R. §1.137(b)

This is a decision on the petition filed September 9, 2005, pursuant to 37 C.F.R. §1.137(b)[1], to revive the above-identified application.

The above-identified application became abandoned for failure to reply within the meaning of 37 C.F.R §1.113 in a timely manner to the final Office action mailed June 18, 2002, which set a shortened statutory period for reply of three (3) months. On September 23, 2002, a Notice of Appeal was filed. No further responses were received, and no extensions of time were requested. Accordingly, the above-identified application became abandoned on September 19, 2002. A Notice of Abandonment was mailed on May 20, 2003.

With the present petition, petitioner has filed the petition fee, an amendment, a Request for Continued Examination (RCE) under 37 C.F.R. §1.114 as well as the associated fee and the proper statement of unintentional delay. The RCE has been accepted as the required reply under 37 C.F.R. §1.137(b)(1). The amendment submitted with the present petition shall serve as the required submission.

---

1 A grantable petition pursuant to 37 CFR 1.137(b) must be accompanied by:
(1) The reply required to the outstanding Office action or notice, unless previously filed;
(2) The petition fee as set forth in § 1.17(m);
(3) A statement that the entire delay in filing the required reply from the due date for the reply until the filing of a grantable petition pursuant to this paragraph was unintentional. The Commissioner may require additional information where there is a question whether the delay was unintentional, and;
(4) Any terminal disclaimer (and fee as set forth in § 1.20(d)) required pursuant to paragraph (d) of this section.

As such, the petition is **GRANTED**.

After the mailing of this decision, the application will be forwarded to Technology Center 1600 for further processing.

The general phone number for the Office of Petitions which should be used for status requests is (571) 272-3282. Telephone inquiries regarding *this decision* should be directed to the undersigned at (571) 272-3225.

It is noted that the address listed on the petition differs from the address of record. The application file does not indicate a change of correspondence address has been filed in this case, although the address given on the petition differs from the address of record. If petitioner desires to receive future correspondence regarding this application, the change of correspondence address must be submitted. A courtesy copy of this decision will be mailed to petitioner. However, all future correspondence will be directed to the address of record until such time as appropriate instructions are received to the contrary. Petitioner will not receive future correspondence related to this application unless Change of Correspondence Address, Patent Form (PTO/SB/122) is submitted for the above-identified application. For petitioner's convenience, a blank Change of Correspondence Address, Patent Form (PTO/SB/122), may be found at http://www.uspto.gov/web/forms/sb0122.pdf.

It is not apparent whether the person signing the statement of unintentional delay was in a position to have firsthand or direct knowledge of the facts and circumstances of the delay at issue. Nevertheless, such statement is being treated as having been made as the result of a reasonable inquiry into the facts and circumstances of such delay2. In the event that such an inquiry has not been made, petitioner must make such an inquiry. If such inquiry results in the discovery that the delay in paying the maintenance fee under 37 CFR 1.137(b) was intentional, petitioner must notify the Office.

Paul Shanoski

Paul Shanoski
Senior Attorney
Office of Petitions
United States Patent and Trademark Office

cc: MUELLER,LISA
Wood Phillips Katz Clark and Mortimer
500 W Madison St Ste 3800
Chicago, IL 60661

---

2 See 37 CFR 10.18(b); cf. Changes to Patent Practice and Procedure; Final Rule Notice, 62 Fed. Reg. 53131, 53178 (October 10, 1997), 1203 Off. Gaz. Pat. Office 63, 103 (October 21, 1997).

UNITED STATES PATENT AND TRADEMARK OFFICE

Commissioner for Patents
United States Patent and Trademark Office
P.O. Box 1450
Alexandria, VA 22313-1450
www.uspto.gov

DEC 22 2004

MILLENNIUM PHARMACEUTICALS, INC.
40 Landsdowne Street
CAMBRIDGE MA 02139

In re Application of:
Busfield et al.
Serial No.: 09/503,387
Filed: February 14, 2000
Attorney Docket No.: MBIO99-057CP2RCEM

DECISION ON PETITION TO WITHDRAW THE HOLDING OF ABANDONMENT

This is in response to applicants' petition under 37 CFR. § 1.181(a) and MPEP 711.03(c) filed on September 13, 2004, requesting withdrawal of the holding of abandonment of the above-identified application based on non-receipt of an Office action and to restore the application to a pending status.

A review of the file history shows that, after the RCE was filed, the Office mailed a first Office action, setting a three-month statutory time period for reply, to applicants on November 19, 2003. On August 16, 2004 the examiner mailed a notice of abandonment for failure to respond to the outstanding Office action.

Applicants state that the Office action of November 19, 2003 was never received and provides as evidence thereof a copy of the attorney docket report where the Office action would have been entered, if received, showing non-receipt of the Office action. Based on the evidence presented, it is concluded that applicants never received the Office action. In view thereof, the Notice of Abandonment mailed August 16, 2004, is vacated and the application is restored to pending status with the mailing date of this decision.

Applicants' petition is **GRANTED**. The application will be forwarded to the examiner for prompt mailing of a new Office action.

Should there be any questions about this decision, please contact Marianne C. Seidel by letter addressed to Director, TC 1600, at the address listed above, or by telephone at 571-272-0584 or by facsimile at 703-872-9306.

Marianne Seidel for
Jasemine C. Chambers
Director, Technology Center 1600

UNITED STATES PATENT AND TRADEMARK OFFICE

Commissioner for Patents
United States Patent and Trademark Office
P.O. Box 1450
Alexandria, VA 22313-1450
www.uspto.gov

Paper No. 15

Qualcomm Incorporated
Patents Department
5775 Morehouse Drive
San Diego, CA 92121-1714

COPY MAILED

NOV 17 2004

OFFICE OF PETITIONS

In re Application of
Rezaiifar et al.
Application No. 09/503,401
Filed: February 14, 2000
Attorney Docket No. PA451DIV2

Decision on Petition

This a decision on the petition under 37 CFR 1.137(b), filed October 4, 2004, to revive the above-identified application.

The petition is **granted.**

This application became abandoned for failure to properly reply within three months to the final Office action mailed March 24, 2004. No extensions of time under the provisions of 37 CFR 1.136(a) were obtained. Accordingly, this application became abandoned on June 25, 2004.

The instant petition requests revival of the application. Petitioner has met the requirements to revive the above-identified application pursuant to 37 CFR 1.137(b). Therefore, the petition is granted and the application is revived.

37 CFR 1.137(b)(3) requires a statement that the entire delay in filing the required reply from the due date for the reply until the filing of a grantable petition pursuant to 37 CFR 1.137(b) was unintentional. If the statement contained in the instant petition varies from the language required by 37 CFR 1.137(b)(3), the statement contained in the instant petition is being construed as the statement required by 37 CFR 1.137(b)(3) and petitioner must notify the Office if this is **not** a correct interpretation of the statement contained in the instant petition.

An extension of time under 37 CFR 1.136 must be filed prior to the expiration of the maximum extendable period for reply. See In re Application of S., 8 USPQ2d 1630, 1631 (Comm'r Pats. 1988). Accordingly, since the $950 extension of time fee submitted with the petition on October 4, 2004, was subsequent to the maximum extendable period for reply, this fee is unnecessary and will be credited to petitioner's deposit account.

The file is now being forwarded to Technology Center Art Unit 2665 for entry and consideration of the Request for Continued Examination and amendment filed on October 4, 2004.

Telephone inquiries may be directed to Petitions Attorney Steven Brantley at (571) 272-3203.

Charles Steven Brantley
Petitions Attorney
Office of Petitions

UNITED STATES PATENT AND TRADEMARK OFFICE

COMMISSIONER FOR PATENTS
UNITED STATES PATENT AND TRADEMARK OFFICE
P.O. BOX 1450
ALEXANDRIA, VA 22313-1450
www.uspto.gov

FITZPATRICK CELLA HARPER & SCINTO
30 ROCKEFELLER PLAZA
NEW YORK NY 10112

COPY MAILED

SEP 22 2008

OFFICE OF PETITIONS

In re Application of
Takahashi
U.S. Patent No. 7,057,748
Application No. 09/503,482
Filed: February 14, 2000
For: Information Processing Apparatus and Method That Determines the Presence or Absence of a Printer Connected to a Network, and Storage Medium Storing Program Therefor

: Decision on Petition

The above-identified application has been forwarded to the undersigned for consideration on a request for a certificate of correction under 37 CFR 1.322 received on January 11, 2008.

The request is dismissed.

Petitioner notes that the front page of the patent does not state "This patent issued on a continued prosecution application filed under 37 CFR 1.53(d), and is subject to the twenty year patent term provisions of 35 U.S.C. 154(a)(2)". Petitioner requests that the inconsistency be reviewed and that a Certificate of Correction be issued.

35 U.S.C. § 154(a)(as amended by the "Uruguay Round Agreements Act," enacted December 8, 1994, as part of Public Law 103-465, 108 Stat. 4809) provides that the term of a patent (other than a design patent) begins on the date the patent issues and ends on the date that is twenty years from the date on which the application for the patent was filed in the United States or, if the application contains a specific reference to an earlier filed application or applications under 35 U.S.C. 120, 121, or 365(c), twenty years from the filing date of the earliest of such application(s). This patent term provision is referred to as the "twenty-year term." See MPEP 2701.

The above-identified application was filed on February 4, 2000, which is after June 8, 1995. Applications filed after on or after June 8, 1995 are subject to the twenty year patent provisions of 35 U.S.C. 154(a)(2). While the patent did issue from an application in which a continued prosecution application was filed, it does not affect whether or not the patent is subject to the twenty year patent provisions of 35 U.S.C. 154(a)(2).

Telephone inquiries with regard to this communication should be directed to Mark O. Polutta at (571) 272-7709.

Mark O. Polutta
Senior Legal Advisor
Office of Patent Legal Administration
Office of the Deputy Commissioner
for Patent Examination Policy

OIPE
JUN 0 2 2000

UNITED STATES DEPARTMENT OF COMMERCE
Patent and Trademark Office
ASSISTANT SECRETARY AND COMMISSIONER OF
PATENTS AND TRADEMARKS
Washington, D.C. 20231

Paper No. 15

COPY MAILED

APR 2 6 2000

SPECIAL PROGRAMS OFFICE
DAC FOR PATENTS

SCHWEGMAN LUNDBERG WOESSNER & KLUTH
P.O. BOX 2938
MINNEAPOLIS, MN 55402

In re Application of
Christopher Pierrat and Nanseng Jeng
Application No. 09/031,639
Filed: February 27, 1998
Attorney Docket No. 303.311US1
For: Method for Optimizing Printing of an Alternating Phase Shift Mask Having a Phase Shift Error

: DECISION GRANTING
: STATUS UNDER
: 37 CFR 1.47(a)

This is a decision on the renewed petition under 37 CFR 1.47(a) filed January 27, 2000.

The petition is granted.

The above-identified application was filed on February 27, 1998, without an executed oath or declaration. Accordingly, on June 3, 1998, a "Notice to File Missing Parts of Application" was mailed. In response, on October 5, 1998 (certificate of mailing date of October 1, 1998), a petition under 37 CFR 1.47(a) was filed along with a declaration executed by joint inventor Pierrat. The petition was dismissed because the address on the oath for the non-signing inventor differed from the last known address listed in the petition.

The instant renewed petition adequately explains the discrepancy in the addresses listed in the declaration and prior petition. Specifically, petitioner states that the address on the oath was correct at the time joint inventor Pierrat signed the oath. Petitioner also states that the non-signing inventor's address changed after the oath was signed but before the petition was filed.

For the foregoing reasons, the papers have been reviewed and found in compliance with 37 CFR 1.47(a). This application is hereby accorded Rule 1.47(a) status.

As provided in Rule 1.47(a), this Office will forward notice of this application's filing to the non-signing inventor at the address given in the petition. Notice of the filing of this application will also be published in the Official Gazette.

After this decision is mailed, the above-identified application will be forwarded to to Publishing Division for processing into a patent.

Schwegman, Lundberg,
Woessner & Kluth, P.A.

MAY 0 2 2000

RECEIVED

Telephone inquiries should be directed to Petitions Attorney Steven Brantley at (703) 306-5683.

Beverly M. Flanagan
Supervisory Petitions Examiner
Office of Petitions
Office of the Deputy Assistant Commissioner
for Patent Policy and Projects

UNITED STATES DEPARTMENT OF COMMERCE
Patent and Trademark Office
ASSISTANT SECRETARY AND COMMISSIONER OF
PATENTS AND TRADEMARKS
Washington, D.C. 20231

Paper No. 5

SCHWEGMAN LUNDBERG WOESSNER & KLUTH
P.O. BOX 2938
MINNEAPOLIS, MN 55402

In re Application of	:
Christopher Pierrat and Nanseng Jeng	: DECISION GRANTING
Application No. 09/503,553	: STATUS UNDER
Filed: February 11, 2000	: 37 CFR 1.47(a)
Attorney Docket No. 303.311US2	:
For: Method for Optimizing Printing of an	:
Alternating Phase Shift Mask Having a	:
Phase Shift Error	:

COPY MAILED

SEP 19 2000

SPECIAL PROGRAMS OFFICE
DAC FOR PATENTS

The above-identified application was filed on February 11, 2000, without an executed oath or declaration. Accordingly, on April 13, 2000, a "Notice to File Missing Parts of Application" was mailed. In response, on June 2, 2000, a copy of the decision granting a 37 CFR 1.47(a) petition from the parent application (09/031,639) was submitted in compliance with 37 CFR 1.63(d)(3) and MPEP 201.06(c).

For the foregoing reasons, the papers have been reviewed and found in compliance with 37 CFR 1.47(a). This application is hereby accorded Rule 1.47(a) status.

As provided in Rule 1.47(a), this Office will forward notice of this application's filing to the non-signing inventor at the address given in the petition. Notice of the filing of this application will also be published in the Official Gazette.

After this decision is mailed, the above-identified application will be forwarded to Technology Center 1700.

Telephone inquiries should be directed to Petitions Attorney Steven Brantley at (703) 306-5683.

Beverly M. Flanagan
Supervisory Petitions Examiner
Office of Petitions
Office of the Deputy Assistant Commissioner
for Patent Policy and Projects

UNITED STATES DEPARTMENT OF COMMERCE
Patent and Trademark Office
ASSISTANT SECRETARY AND COMMISSIONER OF
PATENTS AND TRADEMARKS
Washington, D.C. 20231

Paper No. 8

Nanseng Jeng
501 SE - 123rd Avenue
Vancouver, WA 98684

In re Application of
Christopher Pierrat and Nanseng Jeng
Application No. 09/503,553
Filed: February 11, 2000
Attorney Docket No. 303.311US2
For: Method for Optimizing Printing of an Alternating Phase Shift Mask Having a Phase Shift Error

: DECISION GRANTING
: STATUS UNDER
: 37 CFR 1.47(a)

COPY MAILED

SEP 19 2000

SPECIAL PROGRAMS OFFICE
DAC FOR PATENTS

Dear Mr. Jeng:

You are named as a joint inventor in the above identified United States patent application, filed under the provisions of 35 U.S.C. 116 (United States Code), and 37 CFR 1.47(a), Rules of Practice in Patent Cases. Should a patent be granted on the application you will be designated therein as a joint inventor.

As a named inventor you are entitled to inspect any paper in the file wrapper of the application, order copies of all or any part thereof (at a prepaid cost per 37 CFR 1.19) or make your position of record in the application. Alternatively, you may arrange to do any of the preceding through a registered patent attorney or agent presenting written authorization from you. If you care to join the application, counsel of record (see below) would presumably assist you. Joining in the application would entail the filing of an appropriate oath or declaration by you pursuant to 37 CFR 1.63.

Requests for information regarding your application should be directed to the File Information Unit at (703)308-2733. Information regarding how to pay for and order a copy of the application, or a specific paper in the application, should be directed to Certification Division at (703)308-9726 or 1(800)972-6382 (outside the Washington D.C. area).

Telephone inquiries regarding this communication should be directed to Petitions Attorney Steven Brantley at (703) 306-5683.

Beverly M. Flanagan
Supervisory Petitions Examiner
Office of Petitions
Office of the Deputy Assistant Commissioner
for Patent Policy and Projects

cc: SCHWEGMAN LUNDBERG WOESSNER & KLUTH
P.O. BOX 2938
MINNEAPOLIS, MN 55402

RECEIVED
OIPE/JCWS

UNITED STATES PATENT AND TRADEMARK OFFICE

UNITED STATES DEPARTMENT OF COMMERCE
United States Patent and Trademark Office
Address: COMMISSIONER FOR PATENTS
P.O. Box 1450
Alexandria, Virginia 22313-1450
www.uspto.gov

SEYFARTH SHAW LLP
131 S. DEARBORN ST., SUITE 2400
CHICAGO, IL 60603-5803

Mail Date: 07/02/2010

Applicant	: Chris T. Brune	: DECISION ON REQUEST FOR
Patent Number	: 6443452	: RECALCULATION of PATENT
Issue Date	: 09/03/2002	: TERM ADJUSTMENT IN VIEW
Application No	: 09/503,562	: OF WYETH
Filed	: 02/14/2000	:
		:

The Patentee's Request for Recalculation is **DISMISSED.**

This Request is deemed ineligible for consideration for one or more of the following reasons:

(A). The patent for which PTA recalculation is requested is either a design or reissue application or is a reexamination proceeding;

(B). The patent for which PTA recalculation is requested resulted from a utility or plant application filed under 35 USC 111(a) before May 29, 2000 and no CPA filed in the application on/after May 29, 2000;

(C). The patent for which PTA recalculation is requested resulted from an international application in which the international filing date was before May 29, 2000 and no CPA filed in the application on/after May 29, 2000;

(D). The patent for which PTA recalculation is requested issued on/after March 2, 2010;

(E). The Request for Recalculation was filed more than 180 days after the grant date of the patent and the request was not filed within two months of a dismissal of a request for reconsideration of the of the patent term under 37 CFR 1.705(d);

(F). The Request for Recalculation is not solely limited to USPTO pre-Wyeth interpretation of 35 U.S.C. 154(b)(2)(A);

or

(G). A civil action was filed pursuant to 35 U.S.C. 154(b)(4)(A)concerning the same patent at issue in this request.

Patentee may file a reply to this decision dismissing the Request for Recalculation. Patentee must file such reply within one month or thirty days, whichever is longer, of the mail date of the decision dismissing the Request for Recalculation. No fee is required if patentee is asserting in the reply that the dismissal for ineligibility is improper.

Patentee should use document code PET.OP if electronically filing a reply to this dismissal. If the USPTO finds that the request was improperly deemed ineligible, the USPTO will mail applicant a recalculation determination.

Patentee should be aware that in order to preserve the right to review in the United States District Court for the District of Columbia of the USPTO patent term adjustment determination, patentee must ensure that he or she also take the steps required under 35 U.S.C. 154(b)(4)(A). Nothing in the request for recalculation should be construed as providing an alternative time frame for commencing a civil action under 35 U.S.C. 154 (b)(4)(A).

Any questions concerning this decision should be directed to the Office of Patent Legal Administration at 571-272-7702.

UNITED STATES DEPARTMENT OF COMMERCE
Patent and Trademark Office
ASSISTANT SECRETARY AND COMMISSIONER
OF PATENTS AND TRADEMARKS
Washington, D.C. 20231

SEP 20 2000

#4

NATHAN BOATNER ATTORNEY
PMB 692 7095 HOLLYWOOD BLVD
LOS ANGELES, CA 90028

In re Application of	:
William E. Baumzweiger	: DECISION
Serial No.: 09/503,656	:PETITION TO MAKE SPECIAL
Filed: February 14, 2000	:
For: Brainstem and Limbic Disorder	:

This is in response to the petition applicant filed on February 14, 2000, to make the above-identified application special under the provisions of 37 CFR 1.102(d).

Applicant has satisfied the provisions set forth in M.P.E.P. 708.02, XII, thus the petition is **GRANTED**.

The application will be forwarded to the examiner for action on the merits commensurate with this decision.

Should there be any questions with regard to this letter please contact Carol Lake by letter addressed to the Director, Group 3700/2900, Washington, DC 20231, or by telephone at (703)308-0783 or by facsimile transmission at (703)308-3139.

John E. Kittle
Director
Technology Center 3700/2900

VINCENT MILLIN
SUPERVISORY PATENT EXAMINER
TECHNOLOGY CENTER 3700

VINCENT MILLIN
SUPERVISORY PATENT EXAMINER
TECHNOLOGY CENTER 3700

UNITED STATES PATENT AND TRADEMARK OFFICE

Commissioner for Patents
United States Patent and Trademark Office
P.O. Box 1450
Alexandria, VA 22313-1450
www.uspto.gov

JUL 12 2005

PATRICK F. BRIGHT
BRIGHT & LORING
633 WEST FIFTH STREET, #3330
LOS ANGELES, CA 90071

In re Application of	:
William E. Baumzweiger	:
Serial No.: 09/503,656	: PETITION DECISION
Filed: February 14, 2000	:
Attorney Docket No.: D-9429	:

This is in response to the petition under 37 CFR 1.181, filed April 14, 2005, for withdrawal of abandonment of the above identified application based on failure to receive an Office action. .

A review of the file history shows that the applicants filed Continued Prosecution Application papers (CPA) on July 24, 2002. The papers in part 11 contained a new correspondence address identical to that above except for Dr. William Baumzweiger's name appearing in place of Patrick Bright. The Office failed to note the change of correspondence address. Further, a Power of Attorney with the above address (listing Patrick Bright as addressee) was filed September 17, 2002, and was not entered on Office records which resulted in the mailing of a Final Office action, on July 6, 2004, to applicant at 1839 Ventura Blvd., Suite 245, Tarzana, CA 91350. A Notice of Abandonment was mailed to applicant at the same address on April 7, 2005, and returned by the US Postal Service as undeliverable. Applicant states that the Office action was never received. In view of the Office error in failing to change the correspondence address and other evidence presented the Notice of Abandonment is withdrawn and the application is restored to pending status with the mailing of this decision.

The petition is **GRANTED**.

The application will be forwarded to an examiner (the examiner of record has retired) for mailing of a new Office action.

Should there be any questions about this decision please contact William R. Dixon, Jr., by letter addressed to Director, TC 1600, P.O. Box 1450, Alexandria, VA 22313-1450, or by telephone at 571-272-0519 or by facsimile sent to the general Office facsimile number, 571-273-8300.

Bruce M. Kisliuk
Director, Technology Center 1600

UNITED STATES PATENT AND TRADEMARK OFFICE

COMMISSIONER FOR PATENTS
UNITED STATES PATENT AND TRADEMARK OFFICE
WASHINGTON, D.C. 20231
www.uspto.gov

Paper No. 6

Stephen C. Durant
MORRISON & FOERSTER LLP
425 Market Street
San Francisco, California 94105-2482

MAILED

MAY 31 2002

Technology Center 2100

In re Application of	)	
Paul Allen CRONCE et al	)	
Application No. 09/503,778	)	**DECISION ON REQUEST FOR**
Filed: February 14, 2000	)	**WITHDRAWAL AS ATTORNEY**
For: PORTABLE AUTHORIZATION	)	
DEVICE FOR AUTHORIZING USE	)	
OF PROTECTED INFORMATION	)	
AND ASSOCIATED METHOD	)	

This is a decision on the Request To Withdraw from Representation filed March 25, 2002.

A grantable request to withdraw as attorney of record should indicate thereon the present mailing addresses of the attorney(s) who is/are withdrawing from the record and of the applicant. The request for withdrawal must be signed by every attorney seeking to withdraw or contain a clear indication that one attorney is signing on behalf of another/others. A request to withdraw will not be approved unless at least 30 (thirty) days would remain between the date of approval and the later of the expiration date of a time to file a response or the expiration date of the maximum time period which can be extended under 37 C.F.R. § 1. 136(a). The effective date of withdrawal being the date of decision and not the date of request. See M.P.E.P. § 402.06. 37 C.F.R. § 1.36 further requires that the applicant or patent owner be notified of the withdrawal of the attorney or agent.

The request is **GRANTED**.

All future communications from the Office will be directed to the below-listed address until otherwise notified by applicant. This correspondence address is provided by the withdrawn attorney(s). Applicant is reminded of the obligation to promptly notify the Patent and Trademark Office (Office) of any change in correspondence address to ensure receipt of all communications from the Office.

Vincent N. Trans
Special Programs Examiner
Technology Center 2100
Computer Architecture, Software, and
Electronic Commerce
(703) 305-9750

cc: Mr. Paul Allen Cronce
PACE ANTI-PIRACY, INC.
1363 Meridian Avenue
San Jose, California 95125

UNITED STATES PATENT AND TRADEMARK OFFICE

Commissioner for Patents
United States Patent and Trademark Office
P.O. Box 1450
Alexandria, VA 22313-1450
www.uspto.gov

BORDEN LADNER GERVAIS LLP
WORLD EXCHANGE PLAZA
100 QUEEN STREET SUITE 1100
OTTAWA ON K1P 1J9 CA CANADA

COPY MAILED
SEP 26 2006
OFFICE OF PETITIONS

In re Application of	:	
Patenaude et al.	:	
Application No. 09/503,834	:	ON PETITION
Filed: February 15, 2000	:	
Attorney Docket No. PAT 1952B-2 US	:	

This is a decision on the petition under 37 CFR 1.181, filed December 17, 2004 and September 22, 2005, requesting the withdrawal of the holding of abandonment in the above-identified application and has been so treated.

The petition to withdraw the holding of abandonment is **GRANTED.**

The above-identified application was held abandoned for failure to timely reply to the non-final Office action mailed February 24, 2004, which set a shortened statutory period for reply of three (3) months. A reply was due on or before May 24, 2004. A Notice of Abandonment was mailed on September 20, 2004.

Petitioner states that the reply was in fact timely filed. To support this assertion, petitioner has submitted a copy of the Certificate of Facsimile Transmission dated May 24, 2004. Additionally, petitioner has supplied a copy of the previously mailed correspondence.

In view of the above, the holding of abandonment is hereby withdrawn and the application restored to pending status. A petition to withdraw the holding of abandonment under the provisions of 37 CFR 1.181 does not require a fee and none has been charged.

This matter is being referred to Technology Center AU 2863 for further examination on the merits.

Telephone inquiries concerning this decision should be directed to the undersigned at (571) 272-3206.

Liana Chase
Petitions Examiner
Office of Petitions

UNITED STATES PATENT AND TRADEMARK OFFICE

9-24-08

Commissioner for Patents
United States Patent and Trademark Office
P.O. Box 1450
Alexandria, VA 22313-1450
www.uspto.gov

Patent No. : 7,195,775
Ser. No. : 09/503,852
Inventor(s) : Jonathan L. Tilly, et. al.
Issued : March 27, 2007
Title : PROCTECTION OF THE FEMALE REPRODUCTIVE SYSTEM FROM NATURAL AND ARTIFICAIAL INSULTS
Docket No. : 64982(51588)

Re: Request for Certificate of Correction

Consideration has been given your request for the issuance of a certificate of correction for the above-identified patent under the provisions of Rule(s) 1.322.

Assignees' names and addresses (assignment data) printed in a patent, are based *solely* on information supplied in the appropriate space for identifying the assignment data, i.e., item 3 of the Issue Fee Transmittal Form PTOL-85B. Granting of a request under 37 CFR 3.81(b) is required to correct applicant's error providing ***incorrect or erroneous*** assignment data, *before* issuance of a Certificate of Correction, under 37 CFR 1.323 *(see Manual of Patent Examining Procedures (M.P.E.P) Chp.1400, sect. 1481).* This procedure is required *at any time after the issue fee is paid*, including after issuance of the patent.

In view of the foregoing, your request, in this mater, is hereby denied.

A request to correct the Assignee under 37 CFR 3.81(b) should include:

A. **the processing fee set forth in 37 CFR 1.117(h) (currently $130);**
B. a statement that the failure to include the correct assignee name on the PTOL-85B was inadvertent; and
C. a copy of the Notice of Recordation of Assignment Document, reflecting the reel and frame number where the assignment(s) is recorded and/or reflecting proof of *the date* the assignment was submitted for recordation.

In the Request, Applicant(s) may request that the file be forwarded to Certificates of Correction Branch, for issuance of a Certificate of Correction, if the Request is granted.

Any request under 37 CFR 3.81(b) should be directed to the following address or facsimile number:

By mail: Mail Stop PETITIONS
Commissioner for Patents
Post Office Box 1450
Alexandria, VA 22313-1450

By hand: Customer Service Window
Mail Stop Petitions
Randolph Building
40l Dulany Street
Alexandria, VA 22314

By fax: (703) 872-9306
ATTN: Office of Petitions

If a fee (currently $100) was previously submitted for consideration of a Request for Certificate of Correction, under CFR 1.323, to correct assignment data, , no additional fee is required.

Eva James
For Cecelia Newman
Decisions & Certificates
of Correction Branch
(703) **308-9390 ext. 124** or 125

Matthew Beaudet
Edwards Angell Palmer & dodge LLP
P.O. Box 55874
Boston, MA 02205

Under the Paperwork Reduction Act of 1995, no persons are required to respond to a collection of information unless it displays valid OMB control number.

PETITION TO ACCEPT UNINTENTIONALLY DELAYED PAYMENT OF MAINTENANCE FEE IN AN EXPIRED PATENT (37 CFR 1.378(c))

Patent Number	Issue Date (YYYY-MM-DD)	Application Number	Filing Date (YYYY-MM-DD)	Docket Number (if applicable)
6683867	2004-01-27	09504024	2000-02-18	99CR010/KE

CAUTION: Maintenance fee (and surcharge, if any) payment must correctly identify: (1) the patent number and (2) the application number of the actual U.S. application leading to issuance of that patent to ensure the fee(s) is/are associated with the correct patent. 37 CFR 1.366(c) and (d).

SMALL ENTITY
☐ Patentee claims, or has previously claimed, small entity status. See 37 CFR 1.27.

LOSS OF ENTITLEMENT TO SMALL ENTITY STATUS
☐ Patentee is no longer entitled to small entity status. See 37 CFR 1.27(g)

NOT Small Entity		Small Entity	
Fee	Code	Fee	Code
◉ 3 ½ year	(1551)	○ 3 ½ year	(2551)
○ 7 ½ year	(1552)	○ 7 ½ year	(2552)
○ 11 ½ year	(1553)	○ 11 ½ year	(2553)

SURCHARGE
The surcharge required by 37 CFR 1.20(i)(2) (Fee Code 1558) must be paid as a condition of accepting unintentionally delayed payment of the maintenance fee.

MAINTENANCE FEE (37 CFR 1.20(e)-(g))
The appropriate maintenance fee must be submitted with this petition.

STATEMENT
THE UNDERSIGNED CERTIFIES THAT THE DELAY IN PAYMENT OF THE MAINTENANCE FEE TO THIS PATENT WAS UNINTENTIONAL

PETITIONER(S) REQUEST THAT THE DELAYED PAYMENT OF THE MAINTENANCE FEE BE ACCEPTED AND THE PATENT REINSTATED

THIS PORTION MUST BE COMPLETED BY THE SIGNATORY OR SIGNATORIES

37 CFR 1.378(d) states: "Any petition under this section must be signed by an attorney or agent registered to practice before the Patent and Trademark Office, or by the patentee, the assignee, or other party in interest."

I certify, in accordance with 37 CFR 1.4(d)(4) that I am

◉ An attorney or agent registered to practice before the Patent and Trademark Office

○ A sole patentee

○ A joint patentee; I certify that I am authorized to sign this submission on behalf of all the other patentees.

○ A joint patentee; all of whom are signing this e-petition

○ The assignee of record of the entire interest

Patent Practitioner			
A signature of the applicant or representative is required in accordance with 37 CFR 1.33 and 10.18. Please see 37 CFR 1.4(d) for the form of the signature			
Signature	//keppele//	Date (YYYY-MM-DD)	2008-03-11
Name	Kyle Eppele	Registration Number	34155

This collection of information is required by 37 CFR 1.378(c). The information is required to obtain or retain a benefit by the public which is to file (and by the USPTO to process) an application. Confidentiality is governed by 35 U.S.C. 122 and 37 CFR 1.11 and 1.14. This collection is estimated to take 1 hour to complete, including gathering, preparing, and submitting the completed application form to the USPTO. Time will vary depending upon the individual case. Any comments on the amount of time you require to complete this form and/or suggestions for reducing this burden, should be sent to the Chief Information Officer, U.S. Patent and Trademark Office, U.S. Department of Commerce, P.O. Box 1450, Alexandria, VA 22313-1450. DO NOT SEND FEES OR COMPLETED FORMS TO THIS ADDRESS. **This form can only be used when in conjunction with EFS-Web. If this form is mailed to the USPTO, it may cause delays in reinstating the patent.**

Privacy Act Statement

The Privacy Act of 1974 (P.L. 93-579) requires that you be given certain information in connection with your submission of the attached form related to a patent application or patent. Accordingly, pursuant to the requirements of the Act, please be advised that: (1) the general authority for the collection of this information is 35 U.S.C. 2(b)(2); (2) furnishing of the information solicited is voluntary; and (3) the principal purpose for which the information is used by the U.S. Patent and Trademark Office is to process and/or examine your submission related to a patent application or patent. If you do not furnish the requested information, the U.S. Patent and Trademark Office may not be able to process and/or examine your submission, which may result in termination of proceedings or abandonment of the application or expiration of the patent.

The information provided by you in this form will be subject to the following routine uses:

1. The information on this form will be treated confidentially to the extent allowed under the Freedom of Information Act (5 U.S.C. 552) and the Privacy Act (5 U.S.C. 552a). Records from this system of records may be disclosed to the Department of Justice to determine whether the Freedom of Information Act requires disclosure of these record s.

2. A record from this system of records may be disclosed, as a routine use, in the course of presenting evidence to a court, magistrate, or administrative tribunal, including disclosures to opposing counsel in the course of settlement negotiations.

3. A record in this system of records may be disclosed, as a routine use, to a Member of Congress submitting a request involving an individual, to whom the record pertains, when the individual has requested assistance from the Member with respect to the subject matter of the record.

4. A record in this system of records may be disclosed, as a routine use, to a contractor of the Agency having need for the information in order to perform a contract. Recipients of information shall be required to comply with the requirements of the Privacy Act of 1974, as amended, pursuant to 5 U.S.C. 552a(m).

5. A record related to an International Application filed under the Patent Cooperation Treaty in this system of records may be disclosed, as a routine use, to the International Bureau of the World Intellectual Property Organization, pursuant to the Patent Cooperation Treaty.

6. A record in this system of records may be disclosed, as a routine use, to another federal agency for purposes of National Security review (35 U.S.C. 181) and for review pursuant to the Atomic Energy Act (42 U.S.C. 218(c)).

7. A record from this system of records may be disclosed, as a routine use, to the Administrator, General Services, or his/her designee, during an inspection of records conducted by GSA as part of that agency's responsibility to recommend improvements in records management practices and programs, under authority of 44 U.S.C. 2904 and 2906. Such disclosure shall be made in accordance with the GSA regulations governing inspection of records for this purpose, and any other relevant (i.e., GSA or Commerce) directive. Such disclosure shall not be used to make determinations about individuals.

8. A record from this system of records may be disclosed, as a routine use, to the public after either publication of the application pursuant to 35 U.S.C. 122(b) or issuance of a patent pursuant to 35 U.S.C. 151. Further, a record may be disclosed, subject to the limitations of 37 CFR 1.14, as a routine use, to the public if the record was filed in an application which became abandoned or in which the proceedings were terminated and which application is referenced by either a published application, an application open to public inspections or an issued patent.

9. A record from this system of records may be disclosed, as a routine use, to a Federal, State, or local law enforcement agency, if the USPTO becomes aware of a violation or potential violation of law or regulation.

UNITED STATES PATENT AND TRADEMARK OFFICE

Commissioner for Patents
United States Patent and Trademark Office
P.O. Box 1450
Alexandria, VA 22313-1450
www.uspto.gov

In re Patent No. 6683867
Issue Date: January 27,2004
Application No. 09504024
Filed: February 18,2000
Attorney Docket No. 99CR010/KE

:

:DECISION GRANTING PETITION
:UNDER 37 CFR 1.378(c)

:

This is a decision on the electronic petition, filed March 11,2008 ,under 37 CFR 1.378(c) to accept the unintentionally delayed payment of the 3.5 year maintenance fee for the above-identified patent.

The petition is GRANTED.

The maintenance fee is accepted, and the above-identified patent reinstated as of March 11,2008 . This decision also constitutes notice that the fee has been accepted. An electronic copy of the petition and this decision has been created as an entry in an Image File Wrapper. Nevertheless, petitioner should print and retain an independent copy

Telephone inquires related to this electronic decision should be directed to the Electronic Business Center at 1-866-217-9197.

UNITED STATES PATENT AND TRADEMARK OFFICE

UNITED STATES DEPARTMENT OF COMMERCE
United States Patent and Trademark Office
Address: COMMISSIONER FOR PATENTS
P.O. Box 1450
Alexandria, Virginia 22313-1450
www.uspto.gov

SHUMAKER & SIEFFERT, P. A.
1625 RADIO DRIVE
SUITE 300
WOODBURY, MN 55125

Mail Date: 04/22/2010

Applicant	: Lalitha Vaidyanathan	: DECISION ON REQUEST FOR
Patent Number	: 7630903	: RECALCULATION of PATENT
Issue Date	: 12/08/2009	: TERM ADJUSTMENT IN VIEW
Appliction No	: 09/504,159	: OF WYETH
Filed	: 02/15/2000	:
		:

The Patentee's Request for Recalculation is **DISMISSED.**

This Request is deemed ineligible for consideration for one or more of the following reasons:

(A). The patent for which PTA recalculation is requested is either a design or reissue application or is a reexamination proceeding;

(B). The patent for which PTA recalculation is requested resulted from a utility or plant application filed under 35 USC 111(a) before May 29, 2000 and no CPA filed in the application on/after May 29, 2000;

(C). The patent for which PTA recalculation is requested resulted from an international application in which the international filing date was before May 29, 2000 and no CPA filed in the application on/after May 29, 2000;

(D). The patent for which PTA recalculation is requested issued on/after March 2, 2010;

(E). The Request for Recalculation was filed more than 180 days after the grant date of the patent and the request was not filed within two months of a dismissal of a request for reconsideration of the of the patent term under 37 CFR 1.705(d);

(F). The Request for Recalculation is not solely limited to USPTO pre-Wyeth interpretation of 35 U.S.C. 154(b)(2)(A);

or

(G). A civil action was filed pursuant to 35 U.S.C. 154(b)(4)(A)concerning the same patent at issue in this request.

Patentee may file a reply to this decision dismissing the Request for Recalculation. Patentee must file such reply within one month or thirty days, whichever is longer, of the mail date of the decision dismissing the Request for Recalculation. No fee is required if patentee is asserting in the reply that the dismissal for ineligibility is improper.

Patentee should use document code PET.OP if electronically filing a reply to this dismissal. If the USPTO finds that the request was improperly deemed ineligible, the USPTO will mail applicant a recalculation determination.

Patentee should be aware that in order to preserve the right to review in the United States District Court for the District of Columbia of the USPTO patent term adjustment determination, patentee must ensure that he or she also take the steps required under 35 U.S.C. 154(b)(4)(A). Nothing in the request for recalculation should be construed as providing an alternative time frame for commencing a civil action under 35 U.S.C. 154 (b)(4)(A).

Any questions concerning this decision should be directed to the Office of Patent Legal Administration at 571-272-7702.

UNITED STATES PATENT AND TRADEMARK OFFICE

Commissioner for Patents
United States Patent and Trademark Office
P.O. Box 1450
Alexandria, VA 22313-1450
www.uspto.gov

COPY MAILED
MAY 0 2 2006
OFFICE OF PETITIONS

FISH & RICHARDSON
1425 K STREET N.W.
WASHINGTON DC 20005-3500

In re Application of	:	
Shunpei Yamazaki et al	:	
Application No. 09/504,235	:	ON PETITION
Filed: February 15, 2000	:	
Attorney Docket No.	:	
07977/008004/US2938D1D2	:	

This is a decision on the petition, filed May 1, 2006, under 37 CFR 1.313(c)(2) to withdraw the above-identified application from issue after payment of the issue fee.

The petition is **GRANTED.**

The above-identified application is withdrawn from issue for consideration of a submission under 37 CFR 1.114 (request for continued examination). See 37 CFR 1.313(c)(2).

Petitioner is advised that the issue fee paid on February 10, 2005, in the above-identified application cannot be refunded. If, however, the above-identified application is again allowed, petitioner may request that it be applied towards the issue fee required by the new Notice of Allowance.[1]

Telephone inquiries should be directed to the undersigned at (571) 272-3208.

The examiner of Technology Center AU 2629 will consider the request for continued examination under 37 CFR 1.114.

Karen Creasy

Karen Creasy
Petitions Examiner
Office of Petitions

---

[1] The request to apply the issue fee to the new Notice may be satisfied by completing and returning the new Issue Fee Transmittal Form PTOL-85(b), which includes the following language thereon: "Commissioner for Patents is requested to apply the Issue Fee and Publication Fee (if any) or re-apply any previously paid issue fee to the application identified above." Petitioner is advised that, whether a fee is indicated as being due or not, the Issue Fee Transmittal Form **must** be completed and timely submitted to avoid abandonment. Note the language in bold text on the first page of the Notice of Allowance and Fee(s) Due (PTOL-85).

UNITED STATES PATENT AND TRADEMARK OFFICE

Commissioner for Patents
United States Patent and Trademark Office
P.O. Box 1450
Alexandria, VA 22313-1450
www.uspto.gov

FISH & RICHARDSON P.C.
1425 K STREET NW, 11th FLOOR
WASHINGTON DC 20005-3500

COPY MAILED

FEB 05 2007

OFFICE OF PETITIONS

In re Application of	:	
YAMAZAKI, et al.	:	
Application No. 09/504,235	:	DECISION GRANTING PETITION
Filed: February 15, 2000	:	UNDER 37 CFR 1.313(c)(2)
Attorney Docket No. 07977/008004/US2938D1D2	:	

This is a decision on the petition under 37 CFR 1.313(c)(2), filed February 1, 2007, to withdraw the above-identified application from issue after payment of the issue fee.

The petition is **GRANTED**.

The above-identified application is withdrawn from issue for consideration of a submission under 37 CFR 1.114 (request for continued examination). *See* 37 CFR 1.313(c)(2).

Petitioner is advised that the issue fee paid on November 22, 2006 cannot be refunded. If, however, this application is again allowed, petitioner may request that it be applied towards the issue fee required by the new Notice of Allowance.[1]

Telephone inquiries should be directed to Monica Graves at (571) 272-7253.

This application is being referred to Technology Center AU 2629 for processing of the request for continued examination under 37 CFR 1.114 and for consideration of the concurrently filed Information Disclosure Statement.

Karen Creasy

Karen Creasy
Petitions Examiner
Office of Petitions

---

[1] *The request to apply the issue fee to the new Notice may be satisfied by completing and returning the new Part B – Fee(s) Transmittal Form (along with any balance due at the time of submission). Petitioner is advised that the Issue Fee Transmittal Form* ***must*** *be completed and timely submitted to avoid abandonment of the application.*

UNITED STATES PATENT AND TRADEMARK OFFICE

Commissioner for Patents
United States Patent and Trademark Office
P.O. Box 1450
Alexandria, VA 22313-1450
www.uspto.gov

COPY MAILED

JUN 19 2007

OFFICE OF PETITIONS

FISH & RICHARDSON P.C.
1425 K STREET N.W.
11TH FLOOR
WASHINGTON DC 20005-3500

In re Application of	:	
Shunpei Yamazaki et al	:	
Application No. 09/504,235	:	ON PETITION
Filed: February 15, 2000	:	
Attorney Docket No. 07977/008004/US2938D1D2	:	

This is a decision on the petition, filed June 18, 2007, under 37 CFR 1.313(c)(2) to withdraw the above-identified application from issue after payment of the issue fee.

The petition is **GRANTED.**

The above-identified application is withdrawn from issue for consideration of a submission under 37 CFR 1.114 (request for continued examination). See 37 CFR 1.313(c)(2).

Petitioner is advised that the issue fee paid on May 21, 2007 in the above-identified application cannot be refunded. If, however, the above-identified application is again allowed, petitioner may request that it be applied towards the issue fee required by the new Notice of Allowance.[1]

Telephone inquiries should be directed to the undersigned at (571) 272-3208.

The examiner of Technology Center AU 2629 will consider the request for continued examination under 37 CFR 1.114.

Karen Creasy

Karen Creasy
Petitions Examiner
Office of Petitions

---

[1] The request to apply the issue fee to the new Notice may be satisfied by completing and returning the new Issue Fee Transmittal Form PTOL-85(b), which includes the following language thereon: "Commissioner for Patents is requested to apply the Issue Fee and Publication Fee (if any) or re-apply any previously paid issue fee to the application identified above." Petitioner is advised that, whether a fee is indicated as being due or not, the Issue Fee Transmittal Form **must** be completed and timely submitted to avoid abandonment. Note the language in bold text on the first page of the Notice of Allowance and Fee(s) Due (PTOL-85).

UNITED STATES PATENT AND TRADEMARK OFFICE

UNITED STATES DEPARTMENT OF COMMERCE
United States Patent and Trademark Office
Address: COMMISSIONER FOR PATENTS
P.O. Box 1450
Alexandria, Virginia 22313-1450
www.uspto.gov

Schwabe Williamson & Wyatt
PACWEST CENTER, SUITE 1900
1211 SW FIFTH AVENUE
PORTLAND, OR 97204

Mail Date: 04/23/2010

Applicant	: Swain W. Porter	: DECISION ON REQUEST FOR
Patent Number	: 7644124	: RECALCULATION of PATENT
Issue Date	: 01/05/2010	: TERM ADJUSTMENT IN VIEW
Appliction No	: 09/504,236	: OF WYETH
Filed	: 02/15/2000	:
		:

The Patentee's Request for Recalculation is **DISMISSED.**

This Request is deemed ineligible for consideration for one or more of the following reasons:

(A). The patent for which PTA recalculation is requested is either a design or reissue application or is a reexamination proceeding;

(B). The patent for which PTA recalculation is requested resulted from a utility or plant application filed under 35 USC 111(a) before May 29, 2000 and no CPA filed in the application on/after May 29, 2000;

(C). The patent for which PTA recalculation is requested resulted from an international application in which the international filing date was before May 29, 2000 and no CPA filed in the application on/after May 29, 2000;

(D). The patent for which PTA recalculation is requested issued on/after March 2, 2010;

(E). The Request for Recalculation was filed more than 180 days after the grant date of the patent and the request was not filed within two months of a dismissal of a request for reconsideration of the of the patent term under 37 CFR 1.705(d);

(F). The Request for Recalculation is not solely limited to USPTO pre-Wyeth interpretation of 35 U.S.C. 154(b)(2)(A);

or

(G). A civil action was filed pursuant to 35 U.S.C. 154(b)(4)(A)concerning the same patent at issue in this request.

Patentee may file a reply to this decision dismissing the Request for Recalculation. Patentee must file such reply within one month or thirty days, whichever is longer, of the mail date of the decision dismissing the Request for Recalculation. No fee is required if patentee is asserting in the reply that the dismissal for ineligibility is improper.

Patentee should use document code PET.OP if electronically filing a reply to this dismissal. If the USPTO finds that the request was improperly deemed ineligible, the USPTO will mail applicant a recalculation determination.

Patentee should be aware that in order to preserve the right to review in the United States District Court for the District of Columbia of the USPTO patent term adjustment determination, patentee must ensure that he or she also take the steps required under 35 U.S.C. 154(b)(4)(A). Nothing in the request for recalculation should be construed as providing an alternative time frame for commencing a civil action under 35 U.S.C. 154 (b)(4)(A).

Any questions concerning this decision should be directed to the Office of Patent Legal Administration at 571-272-7702.

UNITED STATES PATENT AND TRADEMARK OFFICE

Commissioner for Patents
United States Patent and Trademark Office
P.O. Box 1450
Alexandria, VA 22313-1450
www.uspto.gov

DIGIMARC CORPORATION
9405 SW GEMINI DRIVE
BEAVERTON, OR 97008

COPY MAILED

APR 19 2005

OFFICE OF PETITIONS

ON PETITION

In re Application of
Davis et al.
Application No. 09/504,239
Filed: February 15, 2000
Attorney Docket No. 60114

This is a decision on the petition under 37 C.F.R. § 1.137(b), filed April 4, 2005, to revive the above-identified application.

The petition is **GRANTED.**

The above-identified application became abandoned for failure to submit the issue fee in a timely manner in reply to the Notice of Allowance mailed November 15, 2004, which set a statutory period for reply of three (3) months. Accordingly, the above-identified application became abandoned on February 16, 2005.

Petitioner has met the requirements to revive the above-identified application pursuant to 37 CFR 1.137(b).

Although a Request for Continued Examination (RCE) was submitted with the instant petition, the issue fee must still be collected at this time. Accordingly, an additional $1400.00 will be charged to petitioner's deposit account as authorized. If the above-identified application is again allowed, petitioner may request that it be applied towards the issue fee required by the new Notice of Allowance.[1]

In view of the RCE submission, the instant application is withdrawn from issue.

This matter is being referred to Technology Center 2600 for processing of the Request for Continued Examination under 37 CFR 1.114 filed with the instant petition.

Telephone inquiries regarding this decision should be directed to the undersigned at (571) 272-3282.

Liana Chase
Petitions Examiner
Office of Petitions
Office of the Deputy Commissioner
for Patent Examination Policy

---

[1] The request to apply the issue fee to the new Notice must be made in writing and should be accompanied by the new Issue Fee Transmittal Form PTOL-85(b), along with a copy of this decision. The request and pertinent attachments should be addressed to **Box Issue Fee**. Additionally, if the issue fee has increased from the previously paid issue fee, the balance due must be submitted. **Failure to request in writing that the previously paid issue fee be applied towards the new Notice and payment of any balance due will result in the abandonment of the application.**

UNITED STATES PATENT AND TRADEMARK OFFICE

Commissioner for Patents
United States Patent and Trademark Office
P.O. Box 1450
Alexandria, VA 22313-1450
www.uspto.gov

DIGIMARC CORPORATION
9405 SW GEMINI DRIVE
BEAVERTON OR 97008

COPY MAILED

JUN 12 2007

OFFICE OF PETITIONS

In re Patent No. 6,965,682	:	
Application No. 09/504,239	:	
Filed: February 15, 2000	:	ON PETITION
Issued: November 15, 2005	:	
Attorney Docket No. 60114	:	

This is a decision on the petition filed April 2, 2007, which is being treated as a request under 37 CFR 3.81(b)[1] to add the name of the assignee to the front page of the above-identified patent by way of a Certificate of Correction.

The request is **GRANTED**.

The $130.00 fee required under 37 CFR 3.81 will be charged to petitioner's deposit account as authorized.

The patent file is being forwarded to the Certificates of Correction Branch for issuance of the requested Certificate of Correction.

Telephone inquiries concerning this decision may be directed to Petitions Examiner Liana Walsh at (571) 272-3206. Inquiries regarding the issuance of a certificate of correction should be directed to the Certificate of Correction Branch at (571) 272-4200.

LWalsh for
Frances Hicks
Petitions Examiner
Office of Petitions

[1] *See* MPEP 1309, subsection II; and Official Gazette of June 22, 2004.

UNITED STATES PATENT AND TRADEMARK OFFICE

COMMISSIONER FOR PATENTS
UNITED STATES PATENT AND TRADEMARK OFFICE
WASHINGTON, D.C. 20231
www.uspto.gov

Paper No. 6

JOSEPH A. SAWYER JR
SAWYER & ASSOCIATES
POST OFFICE BOX 51418
PALO ALTO, CA 94303

COPY MAILED

MAY 0 8 2002

OFFICE OF PETITIONS

In re Application of :
Roland Portman et al :
Application No. 09/504,304 :
Filed: February 15, 2000 :
Attorney Docket No. 1458P :

ON PETITION

This is a decision on the petition under 37 CFR 1.137(b), filed April 12, 2002, to revive the above-identified application.

The petition is **GRANTED**.

The above-identified application became abandoned for failure to reply in a timely manner to the non-final Office action mailed June 6, 2001, which set a shortened statutory period for reply of three (3) months. No extensions of time under the provisions of 37 CFR 1.136(a) were obtained. Accordingly, the above-identified application became abandoned on September 7, 2001.

The above-identified application is being revived solely for purposes of continuity with a continued prosecution application (CPA) filed on April 12, 2002.

Telephone inquiries concerning this decision should be directed to Irvin Dingle at (703) 306-5684.

The application file is being forwarded to Technology Center 2800 for further processing.

Irvin Dingle
Petitions Examiner
Office of Petitions
Office of the Deputy Commissioner
for Patent Examination Policy

UNITED STATES PATENT AND TRADEMARK OFFICE

COMMISSIONER FOR PATENTS
UNITED STATES PATENT AND TRADEMARK OFFICE
WASHINGTON, D.C. 20231
www.uspto.gov

Paper No. 4

Michael Hetherington
Woodside Intellectual Property Law Group
120 Langley Hill Road
P O Box 620839
Woodside, CA 94062

MAILED

SEP 2 5 2002

Technology Center 2100

In re Application of:	)	
Steven Ericsson Zenith	)	
Application No. 09/504,327	)	**DECISION ON REQUEST FOR**
Filed: February 14,2000	)	**WITHDRAWAL AS ATTORNEY**
For: INTERACTIVE MULTI MEDIA	)	
USER INTERFACE USING	)	
AFFINITY BASED	)	
CATEGORIZATION	)	

This is a decision on the Request To Withdraw from Representation filed September 3, 2002.

A grantable request to withdraw as attorney of record should indicate thereon the present mailing addresses of the attorney(s) who is/are withdrawing from the record and of the applicant. The request for withdrawal must be signed by every attorney seeking to withdraw or contain a clear indication that one attorney is signing on behalf of another/others. A request to withdraw will not be approved unless at least 30 (thirty) days would remain between the date of approval and the later of the expiration date of a time to file a response or the expiration date of the maximum time period which can be extended under 37 C.F.R. § 1. 136(a). The effective date of withdrawal being the date of decision and not the date of request. See M.P.E.P. § 402.06. **37 C.F.R. § 1.36 further requires that the applicant or patent owner be notified of the withdrawal of the attorney or agent**.

There is no indication that Applicant has been notified of the request for withdrawal. Accordingly, the request is **DENIED**.

All future communications from the United States Patent and Trademark Office (Office) will continue to be directed to the above-listed address until otherwise notified by applicant. Applicant is reminded of the obligation to promptly notify the Office of any change in correspondence address to ensure receipt of all communications from the Office.

FOR

Vincent N. Trans
Special Programs Examiner
Technology Center 2100
Computer Architecture and Software
(703) 305-9750

UNITED STATES PATENT AND TRADEMARK OFFICE

COMMISSIONER FOR PATENTS
UNITED STATES PATENT AND TRADEMARK OFFICE
P.O. BOX 1450
ALEXANDRIA, VA 22313-1450
www.uspto.gov

MAILED

NOV 19 2003

Technology Center 2100

Paper No. 11

Dr. Steven Ericsson Zenith
1077 Clematis Drive
Sunnyvale CA 94086

In re Application of: Dr. Steven Ericsson Zenith Application No.: 09/504,327 Filed: February 14, 2000 For: **INTERACTIVE MULTI MEDIA USER INTEFACE USING AFFINITY BASED CATEGORIZATION**	))))))	**DECISION ON PETITION TO WITHDRAW THE HOLDING OF ABANDONMENT**

This is in reply to Petitioner's communication, filed in the United States Patent and Trademark Office on August 25, 2003. This communication will be treated as a petition to Withdraw the Holding of Abandonment under 37 CFR 1.181 for the purpose of this decision. No fee is required.

A review of the file record reveals that:

1. The Examiner, on September 10, 2002, issued an Office letter;
2. Petitioner timely submitted an amendment on March 04, 2003;
3. The Examiner, on April 18, 2003, issued a Notice of Non-Compliant Amendment which stated that Petitioner's amendment dated March 04, 2003 was non-compliant, but appeared to be *bona fide*; therefore, Petitioner was given a time period of one month or thirty days, whichever is longer, to supply the required correction. In addition, extensions of time under 136 (a) was possible;
4. On May 15, 2003, Petitioner timely submitted a response to the Notice of Non-Compliant Amendment. This response was not entered because of its non-compliance;
5. The Examiner, on June 27, 2003, issued a Notice of Abandonment; and
6. Petitioner, on August 25, 2003, timely petitioned to Withdraw the Holding of Abandonment under 37 CFR 1.181, and simultaneously submitted a response to the Office letter dated September 10, 2002.

Although Petitioner's response dated May 15, 2003 was again found non-compliant and was not entered, it was timely responded to the Notice of Non-Compliant Amendment. Therefore, the Notice of Abandonment dated June 27, 2003 was premature.

For the reasons stated above, the Petition is **GRANTED**.

It is noted that Petitioner is unfamiliar with patent prosecution procedure. While an inventor may prosecute the application, lack of skill in this field usually acts as a liability in affording the maximum protection for the invention disclosed. Petitioner is advised to secure the services of a

registered patent attorney or agent to prosecute the application, since the value of a patent is largely dependent upon skilled preparation and prosecution. The Office cannot aid in selecting an attorney or agent.

Petitioner is advised of the availability of the publication "Attorneys and Agents Registered to Practice Before the U.S. Patent and Trademark Office." This publication is for sale by the Superintendent of Documents, U.S. Government Printing Office, Washington, D.C. 20402.

Petitioner is given a TIME PERIOD of ONE MONTH from the mailing of the Examiner's NOTICE TO APPLICANT (form PTOL 327-- Paper No. 12) and papers attached thereto, within which to submit a supplemental paper correcting the informal portions and complying with the rule, as required by the Examiner. The application will become abandoned unless Petitioner timely responds to such NOTICE TO APPLICANT (form PTOL 327-- Paper No. 12) and papers. **NO** EXTENSION OF THIS TIME PERIOD may be granted under 37 CFR 1.136(a).

Bot LeDynh
Special Programs Examiner
Technology Center 2100
Computer Architecture, Software, and Information Security
(703) 305-0651

UNITED STATES PATENT AND TRADEMARK OFFICE

COMMISSIONER FOR PATENTS
UNITED STATES PATENT AND TRADEMARK OFFICE
P.O. BOX 1450
ALEXANDRIA, VA 22313-1450
www.uspto.gov

WORKMAN NYDEGGER/MICROSOFT
1000 EAGLE GATE TOWER
60 EAST SOUTH TEMPLE
SALT LAKE CITY, UT 84111

COPY MAILED
NOV 21 2006
OFFICE OF PETITIONS

In re Application of	:	
Dr. Steven E. Zenith	:	
Application No. 09/504,327	:	ON PETITION
Filed: February 14, 2000	:	
Attorney Docket No. 14531.152	:	

This is a decision in response to the petition under 37 CFR 1.137(b), filed June 9, 2006, to revive the above-identified application.

The petition is **GRANTED**.

This application became abandoned for failure to timely reply to the final Office action mailed June 10, 2005. A Notice of Abandonment was mailed February 3, 2006. In response, on June 9, 2006, a Request for Extension of Time, a Request for Continued Examination (RCE), an amendment and the present petition were filed.

An extension of time under 37 CFR 1.136 must be filed prior to the expiration of the maximum extendable period for reply. See In re Application of S., 8 USPQ2d 1630, 1631 (Comm'r Pats. 1988). Since the $1,005 extension of time fee submitted with the petition on June 9, 2006 was subsequent to the maximum extendable period for reply, the fee is unnecessary and will be credited to petitioner's deposit account.

37 CFR 1.137(b)(3) requires a statement that the entire delay in filing the required reply from the due date for the reply until the filing of a grantable petition pursuant to 37 CFR 1.137(b) was unintentional. Although the statement contained in the petition varies from the language required by 37 CFR 1.137(b)(3), the statement will be construed as the statement required by 37 CFR 1.137(b)(3). Petitioner must notify the Office if this is **not** a correct interpretation of the statement contained in the instant petition.

The application is revived for consideration of a submission under 37 CFR 1.114 (request for continued examination).

Telephone inquiries concerning this decision should be directed to the undersigned at (571) 272-3204.

The application file is being forwarded to Technology Center AU 2173, for further processing of the request for continued examination under 37 CFR 1.114.

Sherry D. Brinkley
Petitions Examiner
Office of Petitions

UNITED STATES PATENT AND TRADEMARK OFFICE

Commissioner for Patents
United States Patent and Trademark Office
P.O. Box 1450
Alexandria, VA 22313-1450
www.uspto.gov

PAPER 10

THOMAS L LOCKHART
BRIDGEWATER PLACE
333 BRIDGE STREET
P.O. BOX 352
GRAND RAPIDS MI 49501-0352

COPY MAILED

JAN 31 2007

OFFICE OF PETITIONS

IN RE APPLICATION OF :
CHRISTIAN DUBOC ET AL. :
APPLICATION NO. 09/504,676 :
FILED: FEBRUARY 15, 2000 :
ATTORNEY DOCKET NO. **BORDENP12US0** :

ON PETITION

THIS IS A DECISION ON THE PETITION FILED NOVEMBER 7, 2006 UNDER 37 CFR 1.137(B),[1] TO REVIVE THE ABOVE-IDENTIFIED APPLICATION.

THE PETITION UNDER 37 CFR 1.137 (B) IS **GRANTED**.

A NOTICE OF ALLOWABILITY, MAILED JUNE 17, 2003, REQUIRED THE SUBMISSION OF CORRECTED DRAWINGS ON OR BEFORE SEPTEMBER 17, 2003. THIS APPLICATION BECAME ABANDONED SEPTEMBER 18, 2003. ACCORDINGLY, A NOTICE OF ABANDONMENT WAS MAILED OCTOBER 22, 2003.

ALL OTHER REQUIREMENTS UNDER 37 CFR 1.137(B) HAVING BEEN MET, THIS MATTER IS BEING REFERRED TO THE PUBLISHING DIVISION.

Telephone inquiries concerning this matter may be directed to the undersigned Petitions Attorney at (571) 272-3212.

Patricia Faison-Ball
Senior Petitions Attorney
Office of Petitions

---

[1]Effective December 1, 1997, the provisions of 37 CFR 1.137(b) now provide that where the delay in reply was unintentional, a petition may be filed to revive an abandoned application or a lapsed patent pursuant to 37 CFR 1.137(b). A grantable petition filed under the provisions of 37 CFR 1.137(b) must be accompanied by:

(1) the required reply, unless previously filed. In a nonprovisional application abandoned for failure to prosecute, the required reply may be met by the filing of a continuing application. In a nonprovisional application filed on or after June 8, 1995, and abandoned for failure to prosecute, the required reply may also be met by the filing of a request for continued examination in compliance with § 1.114. In an application or patent, abandoned or lapsed for failure to pay the issue fee or any portion thereof, the required reply must be the payment of the issue fee or any outstanding balance thereof.

(2) the petition fee as set forth in 37 CFR 1.17(m);

(3) a statement that the entire delay in filing the required reply from the due date for the reply until the filing of a grantable petition pursuant to 37 CFR 1.137(b) was unintentional. The Commissioner may required additional information where there is a question whether the delay was unintentional; and

(4) any terminal disclaimer (and fee as set forth in 37 CFR 1.20(d)) required pursuant to 37 CFR 1.137(c)).

SPE RESPONSE FOR CERTIFICATE OF CORRECTION

Paper No.: _____

DATE : Dec. 23, 2008

TO SPE OF : ART UNIT 2634
SUBJECT : Request for Certificate of Correction for Appl. No.:/09/504676 /7428270

Please respond to this request for a certificate of correction within 7 days.

FOR IFW FILES:

Please review the requested changes/corrections as shown in the **COCIN** document(s) in the IFW application image. No new matter should be introduced, nor should the scope or meaning of the claims be changed.

Please complete the response (see below) and forward the completed response to scanning using document code **COCX**.

FOR PAPER FILES:

Please review the requested changes/corrections as shown in the attached certificate of correction. Please complete this form (see below) and forward it with the file to:

Certificates of Correction Branch (CofC)
South Tower - 9A22
Palm Location 7580

Magdalene Talley
Certificates of Correction Branch
703-308-9390 ext. 116

Thank You For Your Assistance

The request for issuing the above-identified correction(s) is hereby:
Note your decision on the appropriate box.

- ☒ **Approved** — **All** changes apply.
- ☐ **Approved in Part** — Specify below which changes **do not** apply.
- ☐ **Denied** — State the reasons for denial below.

Comments: _____

/David Lugo/ AU 2611

UNITED STATES PATENT AND TRADEMARK OFFICE

UNITED STATES DEPARTMENT OF COMMERCE
United States Patent and Trademark Office
Address: COMMISSIONER OF PATENTS AND TRADEMARKS
Washington, D.C. 20231
www.uspto.gov

APPLICATION NO.	FILING DATE	FIRST NAMED INVENTOR	ATTORNEY DOCKET NO.	CONFIRMATION NO.
09/504,783	02/15/2000	Edmund Colby Munger	00479.85672	8308

7590 11/08/2002

Banner & Witcoff, Ltd
1001 G Street, NW
Washington, DC 20001-4597

EXAMINER
LIM, KRISNA

ART UNIT	PAPER NUMBER
2153	

DATE MAILED: 11/08/2002 #18

Please find below and/or attached an Office communication concerning this application or proceeding.

UNITED STATES DEPARTMENT OF COMMERCE
Patent and Trademark Office
ASSISTANT SECRETARY AND COMMISSIONER OF
PATENTS AND TRADEMARKS
Washington, D.C. 20231

In re Application Serial No: 09/504,783	:	DECISION ON PETITION UNDER
Inventor: Edmond Colby Munger et al.	:	37 CFR § 1.97 FOR ,
Filed: February 15, 2000	:	CONSIDERATION
For: Improvements To An Agile Network	:	OF INFORMATION DISCLOSURE
Protocol For Secure Communications	:	STATEMENT AFTER FINAL
With Assured System Availability	:	REJECTION OR ALLOWANCE

The petition under 37 CFR § 1.97(d) for consideration of an information disclosure statement filed August 23, 2002 and September 12, 2002 after allowance as been:

[x] GRANTED.

[ ] DENIED.
The petition lacks:

[ ] The required fee under 37 CFR §§ 1.97(d)(2)(iii) and 1.17(l)(1).

[ ] A proper certification as specified in 37 CFR §§ 1.97(d)(2)(l) and 1.97(e).

The information disclosure statement has been considered and placed in the file as a record.

Glenton Burgess
Supervisory Patent Examiner TC 2153

KRISNA LIM
PRIMARY EXAMINER

ADDRESS:

Bradley C. Wright
Banner & Witcoff, LTD
1001 G Street, N.W.
Washington, D.C. 20001-4597
(202) 508-9100

UNITED STATES PATENT AND TRADEMARK OFFICE

UNITED STATES DEPARTMENT OF COMMERCE
United States Patent and Trademark Office
Address: COMMISSIONER OF PATENTS AND TRADEMARKS
Washington, D.C. 20231
www.uspto.gov

APPLICATION NO.	FILING DATE	FIRST NAMED INVENTOR	ATTORNEY DOCKET NO.	CONFIRMATION NO.
09/504,783	02/15/2000	Edmund Colby Munger	00479.85672	8308

7590 10/08/2002

Banner & Witcoff, Ltd
1001 G Street, NW
Washington, DC 20001-4597

EXAMINER
LIM, KRISNA

ART UNIT	PAPER NUMBER
2153	#14

DATE MAILED: 10/08/2002

Please find below and/or attached an Office communication concerning this application or proceeding.

UNITED STATES DEPARTMENT OF COMMERCE
Patent and Trademark Office
ASSISTANT SECRETARY AND COMMISSIONER OF
PATENTS AND TRADEMARKS
Washington, D.C. 20231

In re Application Serial No: 09/504,783	:	DECISION ON PETITION UNDER
Inventor: Edmond Colby Munger et al.	:	37 CFR § 1.97 FOR
Filed: February 15, 2000	:	CONSIDERATION
For: Improvements To An Agile Network	:	OF INFORMATION DISCLOSURE
Protocol For Secure Communications	:	STATEMENT AFTER FINAL
With Assured System Availability	:	REJECTION OR ALLOWANCE

The petition under 37 CFR § 1.97(d) for consideration of an information disclosure statement filed September 13, 2002 after allowance as been:

[x] GRANTED.

[ ] DENIED.
The petition lacks:

[ ] The required fee under 37 CFR §§ 1.97(d)(2)(iii) and 1.17(l)(1).

[ ] A proper certification as specified in 37 CFR §§ 1.97(d)(2)(l) and 1.97(e).

The information disclosure statement has been considered and placed in the file as a record.

Glenton Burgess
Supervisory Patent Examiner TC 2153

KRISNA LIM
PRIMARY EXAMINER

ADDRESS:

Bradley C. Wright
Banner & Witcoff, LTD
1001 G Street, N.W.
Washington, D.C. 20001-4597
(202) 508-9100

NOTICE RE: CERTIFICATES OF CORRECTION

DATE : July 24, 2003 **Paper No.** 21

TO : **Supervisor, Art Unit** 2153

SUBJECT : Certificate of Correction Request in Patent No.: 6,502,135

A response to the following question is requested with respect to the accompanying request for a certificate of correction.

With respect to the change(s) requested, correcting Office and/or Applicant's errors, should the patent read as shown in the certificate of correction? No new matter should be introduced, nor should the scope or meaning of the claims be changed.

PLEASE COMPLETE THIS FORM AND RETURN WITH FILE, WITHIN 7 DAYS, TO CERTIFICATES OF CORRECTION BRANCH - PK 3-915/922 PALM LOCATION 7580 - TEL. N0. 305-8309

Ernest C. White, LIE
(703) 305- 8339

THANK YOU FOR YOUR ASSISTANCE!

Note your decision by placing a check mark in the appropriate box below, indicating whether all changes requested in the Request for Certificate of Correction should be applied. Please specify which changes should not be applied and indicate the reason(s) for denial, in the "Comments" section below.

☒ **YES** ☐ **NO**

☐ **Comments:** N/A

2123

Supervisor **Art Unit**

UNITED STATES PATENT AND TRADEMARK OFFICE

Commissioner for Patents
United States Patent and Trademark Office
P.O. Box 1450
Alexandria, VA 22313-1450
www.uspto.gov

COPY MAILED

AUG 30 2006

OFFICE OF PETITIONS

KIA SILVERBROOK
SILVERBROOK RESEARCH PTY LTD
393 DARLING STREET
BALLMAIN 2041 AU AUSTRALIA

CANCELLED

COPY MAILED

AUG 29 2006

OFFICE OF PETITIONS

In re Application of	:	
Paul Lapstun et al.	:	ON PETITION
Application No. 09/505,003	:	
Filed: February 15, 2000	:	
Attorney Docket No. SP05US	:	

This is a decision on the petition filed May 23, 2006, to withdraw the holding of abandonment of the above-identified application, which is treated under 37 CFR 1.181.

The petition is DISMISSED.

Any request for reconsideration of this decision must be submitted within **TWO (2) MONTHS** from the mail date of this decision. Extensions of time under 37 CFR 1.136(a) are permitted. The reconsideration request should include a cover letter entitled "Renewed Petition under 37 CFR 1.181," or, as explained in more detail below, "...under 37 CFR 1.137(a)" or (b). This is not a final agency decision.

The above-referenced application was held abandoned on December 29, 2003, for failure to timely reply to the Notice of Non-Compliant Amendment mailed November 24, 2003. Accordingly, a Notice of Abandonment was mailed March 24, 2006.

The Notice of Non-Compliant Amendment set a one month period for reply. Petitioner contends that a reply was faxed to the USPTO in response to the Notice of Non-Compliant Amendment mailed November 24, 2003. A review of the file reveals that an amendment (response) was received on January 21, 2004, however the response was filed one month after the due date. A four month extension of time was also filed to make the response timely however, the extension of time request was not filed until April 7, 2005, which was outside of the maximum period obtainable. In order for the extension of time to have extended the period for reply to the Notice of Non-Compliant Amendment, it would have to have been filed by April 2004. Therefore, neither the response filed January 21, 2004 nor the extension of time filed April 7, 2005 were timely and thus the application was properly abandoned.

In view thereof, the holding of abandonment will not be withdrawn and the notice of abandonment will not be vacated.

Petitioner may wish to file a petition to revive under 37 CFR 1.137(a) or (b). Section 1.137(b) now provides that where the delay in reply was unintentional, a petition may be

filed to revive an abandoned application or a lapsed patent pursuant to 37 CFR 1.137(b). A grantable petition pursuant to 37 CFR 1.137(b) must be accompanied by:

(1) the required reply, unless previously filed. In a nonprovisional application abandoned for failure to prosecute, the required reply may be met by the filing of a continuing application. In an application or patent, abandoned or lapsed for failure to pay the issue fee or any portion thereof, the required reply must be the payment of the issue fee or any outstanding balance thereof;

(2) the petition fee as set forth in 37 CFR 1.17(m) ($675.00);

(3) a statement that the entire delay in filing the required reply from the due date for the reply until the filing of a grantable petition pursuant to 37 CFR 1.137(b) was unintentional. The Commissioner may required additional information where there is a question whether the delay was unintentional; and

(4) any terminal disclaimer (and fee as set forth in 37 CFR 1.20(d)) required pursuant to 37 CFR 1.137(c)).

The filing of a petition under the unintentional standard cannot be intentionally delayed and therefore should be filed promptly. A person seeking revival due to unintentional delay cannot make a statement that the delay was unintentional unless the entire delay, including the delay from the date it was discovered that the application was abandoned until the filing of the petition to revive under 37 CFR 1.137(b), was unintentional. A statement that the delay was unintentional is not appropriate if petitioner intentionally delayed the filing of a petition for revival under 37 CFR 1.137(b).

Further correspondence with respect to this matter should be addressed as follows:

By mail: Mail Stop Petition
Commissioner for Patents
P.O. Box 1450
Alexandria, VA 22313-1450

By FAX: (571) 273-8300

Telephone inquiries concerning this matter may be directed to the undersigned Petitions Attorney at (571) 272-3212.

Patricia Faison-Ball

Patricia Faison-Ball
Senior Petitions Attorney
Office of Petitions

UNITED STATES PATENT AND TRADEMARK OFFICE

Commissioner for Patents
United States Patent and Trademark Office
P.O. Box 1450
Alexandria, VA 22313-1450
www.uspto.gov

KIA SILVERBROOK
SILVERBROOK RESEARCH PTY LTD
393 DARLING STREET
BALLMAIN 2041 AU AUSTRALIA

COPY MAILED
NOV 1 6 2006
OFFICE OF PETITIONS

In re Application of	:	
Paul Lapstun et al.	:	ON PETITION
Application No. 09/505,003	:	
Filed: February 15, 2000	:	
Attorney Docket No. SP05US	:	

This is a decision on the petition, filed September 22, 2006 under 37 CFR 1.137(b), to revive the above-identified application.

The petition is **GRANTED**.

A non-Final Office Action was mailed May 9, 2003. A response was due not later than August 9, 2003. A response in the form of an amendment was filed August 3, 2003 however, on November 24, 2003 the applicant was advised that the amendment filed was non-compliant under 37 CFR 1.121. The time for response was one month from the mailing of the November 24, 2003 Notice. No response having been filed, this application became abandoned November 29, 2003 and accordingly, a Notice of Abandonment was mailed March 24, 2006.

A grantable petition to revive an abandoned application under 37 CFR 1.137(b) must be accompanied by:

(1) the required reply (unless previously filed), which may be met by the filing of a continuing application in a nonprovisional application abandoned for failure to prosecute, but must be the payment of the issue fee or any outstanding balance thereof in an application or patent, abandoned or lapsed for failure to pay the issue fee or any portion thereof;

(2) the petition fee required by 37 CFR 1.17(l);

(3) a statement that the entire delay in filing the required reply from the due date for the reply until the filing of a grantable petition pursuant to 37 CFR 1.137(b) was unintentional. The Commissioner may require additional information where there is a question whether the delay was unintentional; and

(4) a terminal disclaimer (and fee as set forth in 37 CFR 1.20(d)) in a design

application, a utility application filed before June 8, 1995, or a plant application filed before June 8, 1995.

A supplemental amendment was filed with a petition to withdraw the holding of abandonment on May 23, 2006.

This matter is being referred to Technology Center 3632 for processing of the amendment filed May 23, 2006.

Telephone inquiries concerning this matter may be directed to the undersigned Petitions Attorney at (571) 272-3212.

Patricia Faison-Ball

Patricia Faison-Ball
Senior Petitions Attorney
Office of Petitions

#12
DW

UNITED STATES PATENT AND TRADEMARK OFFICE

UNDER SECRETARY OF COMMERCE FOR INTELLECTUAL PROPERTY AND
DIRECTOR OF THE UNITED STATES PATENT AND TRADEMARK OFFICE
WASHINGTON, DC 20231
www.uspto.gov

MAR 15 2002

MAILED

MAR 15 2002

OFFICE OF THE DIRECTOR
TC 3600

D.A. Thomas – Deputy General Counsel
Bridgestone/Firestone, Inc.
1200 Firestone Parkway
Akron, OH 44317

In re Application of :
Donald R. Russell et al. :
Serial No. 09/505,052 : DECISION ON PETITION
Filed February 16, 2000 :
For: SELF-ADHERING WALKWAY PADS:
FOR ROOFING MEMBRANES AND :
METHOD FOR THE APPLICATION :
THEREOF TO ROOFS :

This is in response to applicants' petition under 37 CFR 1.181 filed January 28, 2002 requesting withdrawal of the finality of the Office action mailed November 27, 2001 as being premature.

The Petition is **DENIED**.

Applicants allege that the final rejection was premature because all the grounds of rejection were different than the rejections in the previous Office action and that the nature of the amendments were minor and did not require new grounds of rejection.

MPEP 706.07(a) sets forth that the second or any subsequent action on the merits shall be made final except where the examiner introduces a new ground of rejection that is neither necessitated by the applicants' amendment nor based on information submitted in an information disclosure statement filed during the period set forth in 37 CFR 1.97(c) with the fee set forth in 37 CFR 1.17(p).

A review of the record reveals that a first Office action was mailed on March 14, 2001 wherein all claims 1-7 were rejected under 35 USC 102(b) as anticipated by Davis et al. In response thereto an amendment was filed July 16, 2001. This amendment amended claim 1 as follows. The phrase "affixing.....solids tape to one flat surface of a walkway pad, prior to use in the field, ..." was deleted and "affixing.... solids tape to one flat surface of a walkway pad..., and where said step of affixing occurs at the location where the pad is manufactured" was added. "Prior to use in the field" is a different limitation than "where the pad is manufactured" especially in view of the fact that the claim is a method claim. In response to this amendment, the examiner issued a final rejection mailed November 27, 2001. The final rejection contained all new rejections including a new rejection of claim 1 under 35 USC 102(b) as anticipated by Shepherd. This reference was used since it disclosed the step of affixing a tape "at the manufacturing location" the newly added limitation to claim 1.

Clearly the examiner changed her rejection of the claims, and specifically claim 1 in response to applicant's amendment to the claim wherein the newly added language set forth limitations not previously claimed. The finality of the Office action is deemed appropriate and for this reason the petition is denied.

It is noted that an amendment after final rejection was filed January 28, 2002. This application is being forwarded to the examiner of record for consideration of that amendment.

Summary: Petition DENIED.

Anthony Knight

Anthony Knight, Acting Director
Technology Center 3600
703-308-3179
ak/kd: 03/14/02

PTO/SB/66 (03-09)
Approved for use through 03/31/2012. OMB 0651-0016
U.S. Patent and Trademark Office: U.S. DEPARTMENT OF COMMERCE
Under the Paperwork Reduction Act of 1995, no persons are required to respond to a collection of information unless it displays valid OMB control number.

PETITION TO ACCEPT UNINTENTIONALLY DELAYED PAYMENT OF MAINTENANCE FEE IN AN EXPIRED PATENT (37 CFR 1.378(c))

Patent Number	Issue Date (YYYY-MM-DD)	Application Number	Filing Date (YYYY-MM-DD)	Docket Number (if applicable)
6,957,047	2005-10-18	09/505,201	2000-02-16	026153-014300US

CAUTION: Maintenance fee (and surcharge, if any) payment must correctly identify: (1) the patent number and (2) the application number of the actual U.S. application leading to issuance of that patent to ensure the fee(s) is/are associated with the correct patent. 37 CFR 1.366(c) and (d).

SMALL ENTITY
☒ Patentee claims, or has previously claimed, small entity status. See 37 CFR 1.27.

LOSS OF ENTITLEMENT TO SMALL ENTITY STATUS
☐ Patentee is no longer entitled to small entity status. See 37 CFR 1.27(g)

NOT Small Entity		Small Entity	
Fee	Code	Fee	Code
○ 3 ½ year	(1551)	◉ 3 ½ year	(2551)
○ 7 ½ year	(1552)	○ 7 ½ year	(2552)
○ 11 ½ year	(1553)	○ 11 ½ year	(2553)

SURCHARGE
The surcharge required by 37 CFR 1.20(i)(2) (Fee Code 1558) must be paid as a condition of accepting unintentionally delayed payment of the maintenance fee.

MAINTENANCE FEE (37 CFR 1.20(e)-(g))
The appropriate maintenance fee must be submitted with this petition.

STATEMENT
THE UNDERSIGNED CERTIFIES THAT THE DELAY IN PAYMENT OF THE MAINTENANCE FEE TO THIS PATENT WAS UNINTENTIONAL

PETITIONER(S) REQUEST THAT THE DELAYED PAYMENT OF THE MAINTENANCE FEE BE ACCEPTED AND THE PATENT REINSTATED

THIS PORTION MUST BE COMPLETED BY THE SIGNATORY OR SIGNATORIES

37 CFR 1.378(d) states: "Any petition under this section must be signed by an attorney or agent registered to practice before the Patent and Trademark Office, or by the patentee, the assignee, or other party in interest."

I certify, in accordance with 37 CFR 1.4(d)(4) that I am

◉ An attorney or agent registered to practice before the Patent and Trademark Office

○ A sole patentee

○ A joint patentee; I certify that I am authorized to sign this submission on behalf of all the other patentees.

○ A joint patentee; all of whom are signing this e-petition

○ The assignee of record of the entire interest

Patent Practitioner			
A signature of the applicant or representative is required in accordance with 37 CFR 1.33 and 10.18. Please see 37 CFR 1.4(d) for the form of the signature			
Signature	/Stephen F. Jewett/	Date (YYYY-MM-DD)	2010-06-09
Name	Stephen F. Jewett	Registration Number	27565

This collection of information is required by 37 CFR 1.378(c). The information is required to obtain or retain a benefit by the public which is to file (and by the USPTO to process) an application. Confidentiality is governed by 35 U.S.C. 122 and 37 CFR 1.11 and 1.14. This collection is estimated to take 1 hour to complete, including gathering, preparing, and submitting the completed application form to the USPTO. Time will vary depending upon the individual case. Any comments on the amount of time you require to complete this form and/ or suggestions for reducing this burden, should be sent to the Chief Information Officer, U.S. Patent and Trademark Office, U.S. Department of Commerce, P.O. Box 1450, Alexandria, VA 22313-1450. DO NOT SEND FEES OR COMPLETED FORMS TO THIS ADDRESS. **This form can only be used when in conjunction with EFS-Web. If this form is mailed to the USPTO, it may cause delays in reinstating the patent.**

Privacy Act Statement

The Privacy Act of 1974 (P.L. 93-579) requires that you be given certain information in connection with your submission of the attached form related to a patent application or patent. Accordingly, pursuant to the requirements of the Act, please be advised that: (1) the general authority for the collection of this information is 35 U.S.C. 2(b)(2); (2) furnishing of the information solicited is voluntary; and (3) the principal purpose for which the information is used by the U.S. Patent and Trademark Office is to process and/or examine your submission related to a patent application or patent. If you do not furnish the requested information, the U.S. Patent and Trademark Office may not be able to process and/or examine your submission, which may result in termination of proceedings or abandonment of the application or expiration of the patent.

The information provided by you in this form will be subject to the following routine uses:

1. The information on this form will be treated confidentially to the extent allowed under the Freedom of Information Act (5 U.S.C. 552) and the Privacy Act (5 U.S.C. 552a). Records from this system of records may be disclosed to the Department of Justice to determine whether the Freedom of Information Act requires disclosure of these records.

2. A record from this system of records may be disclosed, as a routine use, in the course of presenting evidence to a court, magistrate, or administrative tribunal, including disclosures to opposing counsel in the course of settlement negotiations.

3. A record in this system of records may be disclosed, as a routine use, to a Member of Congress submitting a request involving an individual, to whom the record pertains, when the individual has requested assistance from the Member with respect to the subject matter of the record.

4. A record in this system of records may be disclosed, as a routine use, to a contractor of the Agency having need for the information in order to perform a contract. Recipients of information shall be required to comply with the requirements of the Privacy Act of 1974, as amended, pursuant to 5 U.S.C. 552a(m).

5. A record related to an International Application filed under the Patent Cooperation Treaty in this system of records may be disclosed, as a routine use, to the International Bureau of the World Intellectual Property Organization, pursuant to the Patent Cooperation Treaty.

6. A record in this system of records may be disclosed, as a routine use, to another federal agency for purposes of National Security review (35 U.S.C. 181) and for review pursuant to the Atomic Energy Act (42 U.S.C. 218(c)).

7. A record from this system of records may be disclosed, as a routine use, to the Administrator, General Services, or his/her designee, during an inspection of records conducted by GSA as part of that agency's responsibility to recommend improvements in records management practices and programs, under authority of 44 U.S.C. 2904 and 2906. Such disclosure shall be made in accordance with the GSA regulations governing inspection of records for this purpose, and any other relevant (i.e., GSA or Commerce) directive. Such disclosure shall not be used to make determinations about individuals.

8. A record from this system of records may be disclosed, as a routine use, to the public after either publication of the application pursuant to 35 U.S.C. 122(b) or issuance of a patent pursuant to 35 U.S.C. 151. Further, a record may be disclosed, subject to the limitations of 37 CFR 1.14, as a routine use, to the public if the record was filed in an application which became abandoned or in which the proceedings were terminated and which application is referenced by either a published application, an application open to public inspections or an issued patent.

9. A record from this system of records may be disclosed, as a routine use, to a Federal, State, or local law enforcement agency, if the USPTO becomes aware of a violation or potential violation of law or regulation.

UNITED STATES PATENT AND TRADEMARK OFFICE

Commissioner for Patents
United States Patent and Trademark Office
P.O. Box 1450
Alexandria, VA 22313-1450
www.uspto.gov

In re Patent No. 6957047
Issue Date: October 18,2005
Application No. 09505201
Filed: February 16,2000
Attorney Docket No.

:
:DECISION GRANTING PETITION
:UNDER 37 CFR 1.378(c)
:

This is a decision on the electronic petition, filed June 9,2010 ,under 37 CFR 1.378(c) to accept the unintentionally delayed payment of the 3.5 year maintenance fee for the above-identified patent.

The petition is **GRANTED**.

The maintenance fee is accepted, and the above-identified patent reinstated as of June 9,2010 .
This decision also constitutes notice that the fee has been accepted. An electronic copy of the petition and this decision has been created as an entry in the Image File Wrapper. Nevertheless, petitioner should print and retain an independent copy.

Telephone inquiries related to this electronic decision should be directed to the Electronic Business Center at 1-866-217-9197.

UNITED STATES PATENT AND TRADEMARK OFFICE

1773

COMMISSIONER FOR PATENTS
UNITED STATES PATENT AND TRADEMARK OFFICE
P.O. BOX 1450
ALEXANDRIA, VA 22313-1450
www.uspto.gov
DW 02-04

PILLSBURY WINTHROP, LLP
P.O. BOX 10500
MCLEAN VA 22102

COPY MAILED
FEB 17 2004
OFFICE OF PETITIONS

In re Application of	:	
Smith et al.	:	
Application No. 09/505,279	:	ON PETITION
Filed: 16 February, 2000	:	
Attorney Docket No. PM265476	:	

This is a decision on the petition filed on 16 December, 2003, for issuance of patent to assignee on a late assignment.

The petition is **GRANTED**.

The petition fee of $130.00 is being charged to counsel's deposit account, No. 03-3975 as authorized in the present petition.

The application is being forwarded to the Publishing Division for processing into a patent.

Telephone inquiries concerning this matter may be directed to the undersigned at 703-308-6918.

DWood

Douglas I. Wood
Senior Petitions Attorney
Office of Petitions

UNITED STATES PATENT AND TRADEMARK OFFICE
SPECIAL PROGRAM LAW OFFICE/OFFICE OF PETITIONS

FACSIMILE TRANSMISSION

RECEIVED
NOV 20 2003
EDWARDS & ANGELL, LLP
IP DOCKETING DEPT. (BOS)

DATE: 11-19-03

TO: Lisa Hazzard
(NAME)

(617) 439-4170
(FACSIMILE NUMBER)

(ORGANIZATION)

NOTED ON SYSTEM
(TELEPHONE NUMBER)

SENDER: Liana Chase
(NAME)

TOTAL NUMBER OF PAGES 2 (INCLUDING THIS COVER PAGE)

If you have not received all pages or you have any questions about this transmission, please contact the SPECIAL PROGRAM LAW OFFICE/OFFICE OF PETITIONS as follows:
DIRECT TELEPHONE No.: 703-305-9282 FACSIMILE No.: 703-308-6916

Brief Message: Give me a call if there are any problems with this transmission.
703-306-0482
Thanx.
LChase

UNITED STATES PATENT AND TRADEMARK OFFICE

Commission r for Patents
United States Patent and Trademark Office
PO Box 1450
Arlington, VA 22313-1450
www.uspto.gov

Paper No. 10

David G. Conlin
Dike Bronstein Roberts & Cushman
130 Water Street
Boston, MA 02109

COPY MAILED

OCT 1 6 2003

OFFICE OF PETITIONS

In re Application of	:	
Kiyoji Takagi et al.	:	
Application No. 09/207,709	:	ON PETITION
Filed: December 9, 1998	:	
Attorney Docket No. 48832	:	

This is a decision on the petition under 37 CFR 1.137(b), filed June 5, 2003, to revive the above-identified application.

The petition is **GRANTED.**

The above-identified application became abandoned for failure to reply in a timely manner in reply to the non-final Office action mailed October 7, 1999, which set a shortened statutory period for reply of three months. No extensions of time under the provisions of 37 CFR 1.136 have been obtained. Accordingly, the application became abandoned on January 8, 2000.

This application is being revived solely for purposes of continuity. As continuity has been established by this decision, the application is again abandoned in favor of continuing-in-part application No. **09/505,468.**

Telephone inquiries concerning this decision should be directed to Latrice Bond at (703) 308-6911.

The application file is being forwarded to Files Repository.

Latrice Bond
Paralegal Specialist
Office of Petitions
Office of the Deputy Commissioner
for Patent Examination Policy

UNITED STATES PATENT AND TRADEMARK OFFICE

COMMISSIONER FOR PATENTS
UNITED STATES PATENT AND TRADEMARK OFFICE
WASHINGTON, D.C. 20231
www.uspto.gov

Paper No. 6

SCOTT C. HARRIS
FISH & RICHARDSON P.C.
4350 LA JOLLA VILLAGE DRIVE, SUITE 500
SAN DIEGO, CA 92122

COPY MAILED

JAN 3 0 2002

OFFICE OF PETITIONS

NOTICE

In re Application of :
Sandor L. Barna et al. :
Application No. 09/505,645 :
Filed: February 16, 2000 :
Attorney Docket No. 08305 / 064001 / 99-02 :

This is a notice regarding your request for acceptance of a fee deficiency submission under 37 CFR 1.28. On September 1, 1998, the Court of Appeals for the Federal Circuit held that 37 CFR 1.28(c) is the sole provision governing the time for correction of the erroneous payment of the issue fee as a small entity. **See DH Technology v. Synergystex International, Inc. 154 F.3d 1333, 47 USPQ2d 1865 (Fed. Cir. Sept. 1, 1998).**

The Office no longer investigates or rejects original or reissue applications under 37 CFR 1.56. **1098 Off. Gaz. Pat. Office 502 (January 3, 1989).** Therefore, nothing in this Notice is intended to imply that an investigation was done.

Your fee deficiency submission under 37 CFR 1.28 is hereby **ACCEPTED**.

Inquiries related to this communication should be directed to the Office of Petitions Staff at (703) 305-9285.

This file is being forwarded to Technology Center 2600.

Irvin Dingle
Petitions Examiner
Office of Petitions
Office of the Deputy Commissioner
for Patent Examination Policy

UNITED STATES PATENT AND TRADEMARK OFFICE

COMMISSIONER FOR PATENTS
UNITED STATES PATENT AND TRADEMARK OFFICE
WASHINGTON, DC 20231
www.uspto.gov

Paper No. 10

MAILED

MAR 1 0 2003

DIRECTOR'S OFFICE
TECHNOLOGY CENTER 2600

THOMAS J D'AMICO
DICKSTEIN SHAPIRO MORIN & OSHINSKY LLP
2101 L STREET NW
WASHINGTON DC 20037-1526

In re Application of :
Sandor Barna et al :
Application No. 09/505,645 :
Filed: February 16, 2000 :
For: **TECHNIQUE FOR FLAGGING OVERSATURATED PIXELS** :

DECISION ON REQUEST TO WITHDRAW AS ATTORNEY

This is a decision on the request to withdraw as attorney/agent of record filed on December 31, 2002.

A grantable request to withdraw as attorney/agent of record must:
(1) indicate the present mailing address of the attorney(s)/agent(s) who seek(s) to withdraw, and
(2) be signed by each attorney/agent seeking to withdraw or clearly be signed on their behalf, and
(3) be *approved* at least thirty (30) days prior to the maximum extendable period for response to any outstanding Office Action, and
(4) indicate the address to which future correspondence should be mailed.

Power of Attorney to petitioner was revoked by the applicant before the instant request was decided.

Accordingly, the instant request is **DISMISSED AS MOOT**.

A courtesy copy of this decision is being mailed to petitioner at the address on the petition, however, all future communications from the Office will be directed to the address listed above until otherwise notified by applicant. Applicant is reminded of the obligation to promptly notify the Patent and Trademark Office of any change in correspondence address to ensure receipt of all communications from the Office.

Krista Zele
Special Program Examiner
Technology Center 2600
Communications
(703) 305-4701

cc: FISH & RICHARDSON, PC
4350 LA JOLLA VILLAGE DRIVE
SUITE 500
SAN DIEGO CA 92122

SCA
KSJ

UNITED STATES PATENT AND TRADEMARK OFFICE

COMMISSIONER FOR PATENTS
UNITED STATES PATENT AND TRADEMARK OFFICE
WASHINGTON, D.C. 20231
www.uspto.gov

OIPE JC177
JAN 0 3 2005
PATENT & TRADEMARK OFFICE

RECEIVED
FEB 07 2002
FISH & RICHARDSON, P.C.
SAN DIEGO

Paper No. 6

SCOTT C. HARRIS
FISH & RICHARDSON P.C.
4350 LA JOLLA VILLAGE DRIVE, SUITE 500
SAN DIEGO, CA 92122

COPY MAILED
JAN 30 2002
OFFICE OF PETITIONS

In re Application of	:	
Sandor L. Barna et al.	:	
Application No. 09/505,645	:	NOTICE
Filed: February 16, 2000	:	
Attorney Docket No. 08305 / 064001 / 99-02	:	

This is a notice regarding your request for acceptance of a fee deficiency submission under 37 CFR 1.28. On September 1, 1998, the Court of Appeals for the Federal Circuit held that 37 CFR 1.28(c) is the sole provision governing the time for correction of the erroneous payment of the issue fee as a small entity. **See DH Technology v. Synergystex International, Inc. 154 F.3d 1333, 47 USPQ2d 1865 (Fed. Cir. Sept. 1, 1998).**

The Office no longer investigates or rejects original or reissue applications under 37 CFR 1.56. **1098 Off. Gaz. Pat. Office 502 (January 3, 1989).** Therefore, nothing in this Notice is intended to imply that an investigation was done.

Your fee deficiency submission under 37 CFR 1.28 is hereby **ACCEPTED**.

Inquiries related to this communication should be directed to the Office of Petitions Staff at (703) 305-9285.

This file is being forwarded to Technology Center 2600.

Irvin Dingle
Petitions Examiner
Office of Petitions
Office of the Deputy Commissioner
for Patent Examination Policy

* No Docketing Required *
Reviewed by Practice Systems
Initials:
Reviewed by Billing Secretary
Initials:

UNITED STATES PATENT AND TRADEMARK OFFICE

Commissioner for Patents
United States Patent and Trademark Office
Washington, D.C. 20231
www.uspto.gov

Paper No. 4

Mailed

JUN 30 2000

Director's Office
Group 2700

Fish & Richardson PC
4225 Executive Square Suite 1400
LaJolla, CA 92037

In re Application of:
Scott C. Harris
Application No.: 09/505,646
Filed: February 16, 2000
For: ENHANCING TOUCH AND FEEL ON THE INTERNET

DECISION ON PETITION TO MAKE SPECIAL

This is a decision on the petition filed May 11, 2000, to make the above-identified application special pursuant to M.P.E.P. § 708.02 (VIII).

A grantable petition to make special in accordance with M.P.E.P. § 708.02, Item VIII, must be accompanied by (a) the fee set forth in 37 C.F.R. § 1.17(I), (b) a statement that all claims are directed to a single invention or an offer to make an oral election without traverse should the Patent and Trademark Office hold that the claims are not directed to a single invention, (c) a statement that a pre-examination search has been made by the inventor, attorney, agent, professional searcher, etc., and a listing of the field of search by class and subclass, (d) one copy of each of the references deemed most closely related to the subject matter encompassed by the claims, and (e) a detailed description of the submitted references and discussions pointing out how the claimed subject matter is distinguishable over these references.

For the above stated reasons, the petition is **GRANTED**.

The application will retain its special status throughout its entire course of prosecution in the Patent and Trademark Office, including appeal, if any to the Board of Patent Appeals and Interferences, subject only to diligent prosecution by the applicant.

The application file will be forwarded to the examiner for expedited prosecution.

Kenneth A. Wieder

Kenneth A. Wieder
Special Program Examiner
Technology Center 2700
Communications & Information Processing
(703) 305-4710

UNITED STATES PATENT AND TRADEMARK OFFICE

COMMISSIONER FOR PATENTS
UNITED STATES PATENT AND TRADEMARK OFFICE
WASHINGTON, D.C. 20231
www.uspto.gov

Paper No. 10

J. Michael Martinez de Andino, Esq.
Hunton & Williams
Riverfront Plaza, East Tower
951 East Byrd Street
Richmond, VA 23219-4074

MAIL

MAR 0 5 2003

DIRECTOR OFFICE
TECHNOLOGY CENTER 2100

In re Application of: Robert D. Newman, et al.	)	
Application No. 09/505,674	)	
Filed: February 17, 2000	)	**DECISION ON REQUEST FOR**
For: E-MAIL SYCHRONIZATION	)	**WITHDRAWAL AS ATTORNEY**
BETWEEN HETEROGENEOUS	)	
MAIL SERVERS	)	

This is a decision on the Request To Withdraw from Representation filed February 18, 2003 and the Supplemental Request To Withdraw filed February 28, 2003.

A grantable request to withdraw as attorney of record should indicate thereon the present mailing addresses of the attorney(s) who is/are withdrawing from the record and of the applicant. The request for withdrawal must be signed by every attorney seeking to withdraw or contain a clear indication that one attorney is signing on behalf of another/others. A request to withdraw will not be approved unless at least 30 (thirty) days would remain between the date of approval and the later of the expiration date of a time to file a response or the expiration date of the maximum time period which can be extended under 37 C.F.R. § 1. 136(a). The effective date of withdrawal being the date of decision and not the date of request. See M.P.E.P. § 402.06. 37 C.F.R. § 1.36 further requires that the applicant or patent owner be notified of the withdrawal of the attorney or agent.

The request is **GRANTED**.

All future communications from the Office will be directed to the below-listed address until otherwise notified by applicant. This correspondence address is provided by the withdrawn attorney(s). Applicant is reminded of the obligation to promptly notify the Patent and Trademark Office (Office) of any change in correspondence address to ensure receipt of all communications from the Office.

Vincent N. Trans
Special Programs Examiner
Technology Center 2100
Computer Architecture and Software
(703) 305-9750

cc: Michael Casey, Esq.
Oblon, Spivak, McClelland, Maier & Neustadt
1940 Duke Street
Alexandria, VA 22314

UNITED STATES PATENT AND TRADEMARK OFFICE

COMMISSIONER FOR PATENTS
UNITED STATES PATENT AND TRADEMARK OFFICE
P.O. BOX 1450
ALEXANDRIA, VA 22313-1450
www.uspto.gov

Paper No. 19

STEPHEN B. DAVIS
BRISTOL-MYERS SQUIBB COMPANY
PATENT DEPARTMENT
P.O. BOX 4000
PRINCETON, NJ 08543-4000

COPY MAILED

JAN 13 2004

OFFICE OF PETITIONS

In re Application of
Olson, Richard E.
Application No. 09/505,788
Filed: February 17, 2000
Attorney Docket No. PH-7076-A

ON PETITION

This is a decision on the petition under 37 C.F.R. § 1.137(b), filed December 5, 2003, to revive the above-identified application.

The petition is **granted.**

This application became abandoned for failure to timely reply within three months to the non-final Office action mailed December 12, 2002. No extensions of time under the provisions of 37 CFR 1.136(a) were obtained. Accordingly, this application became abandoned on March 13, 2003.

Petitioner has met the requirements to revive the above-identified application pursuant to 37 CFR 1.137(b).

There is no indication that the person signing the instant petition was ever given a power of attorney or authorization of agent to prosecute the above-identified application. If the person signing the instant petition desires to receive future correspondence regarding this application, the appropriate power of attorney or authorization of agent must be submitted. While a courtesy copy of this decision is being mailed to the person signing the instant petition, all future correspondence will be directed solely to the address currently of record until such time as appropriate instructions are received to the contrary.

It is not apparent whether the person signing the statement of unintentional delay was in a position to have firsthand or direct knowledge of the facts and circumstances of the delay at issue. Nevertheless, such statement is being treated as having been made as the result of a reasonable inquiry into the facts and circumstances of such delay.[1] In the event that such an inquiry has not been made, petitioner must make such an inquiry. If such inquiry results in the discovery that it is not correct that the entire delay in filing the required reply from the due date for the reply until the filing of a grantable petition pursuant to 37 CFR 1.137(b) was intentional, petitioner must notify

---

[1] See 37 CFR 10.18(b) and Changes to Patent Practice and Procedure; Final Rule Notice, 62 Fed. Reg. 53131, 53178 (October 10, 1997), 1203 Off. Gaz. Pat. Office 63, 103 (October 21, 1997).

the Office.

The file is now being forwarded to Technology Center 1600 for further examination on the merits.

Telephone inquiries should be directed to Paralegal Liana Chase at (703) 306-0482.

Karen Creasy

Karen Creasy
Petitions Examiner
Office of Petitions
Office of the Deputy Commissioner
for Patent Examination Policy

cc: Hans-Peter G. Hoffmann
PILLSBURY WINTHROP LLP
695 E. Main Street
Stamford, CT 06901

UNITED STATES PATENT AND TRADEMARK OFFICE

Commissioner for Patents
United States Patent and Trademark Office
P.O. Box 1450
Alexandria, VA 22313-1450
www.uspto.gov

DAVID CATANZARO
286 UPPER POWDERLY, STREET
CARBONDALE, PA 18407

COPY MAILED

AUG 27 2008

OFFICE OF PETITIONS

In re Application of
Catanzaro, David
Application No. 09/505,791
Filed: February 17, 2000
Attorney Docket No. None

DECISION ON PETITION

This is a decision on the petition under the unintentional provisions of 37 CFR 1.137(b), filed July 1, 2008, to revive the above-identified application.

The petition is **DISMISSED**.

Any request for reconsideration of this decision must be submitted within TWO (2) MONTHS from the mail date of this decision. Extensions of time under 37 CFR 1.136(a) are permitted. The reconsideration request should include a cover letter entitled "Renewed Petition under 37 CFR 1.137(b)." This is **not** a final agency action within the meaning of 5 U.S.C. § 704.

This application became abandoned for failure to timely pay the issue fee on or before January 7, 2002, as required by the Notice of Allowance and Fee(s) Due mailed October 5, 2001. Accordingly, the application became abandoned on January 8, 2002. A Notice of Abandonment was mailed October 28, 2002.

A grantable petition under 37 CFR 1.137(b) must be accompanied by: (1) the required reply, unless previously filed; (2) the petition fee as set forth in 37 CFR 1.17(m); (3) a statement that the entire delay in filing the required reply from the due date for the reply until the filing of a grantable petition pursuant to 37 CFR 1.137(b) was unintentional; and (4) any terminal disclaimer (and fee as set forth in 37 CFR 1.20(d)) required by 37 CFR 1.137(d). Where there is a question as to whether either the abandonment or the delay in filing a petition under 37 CFR 1.137 was unintentional, the Director may require additional information. *See* MPEP 711.03(c)(II)(C) and (D). The instant petition lacks item (3).

There are three periods to be considered during the evaluation of a petition under 37 CFR 1.137(b):

(1) the delay in reply that originally resulted in the abandonment;

(2) the delay in filing an initial petition pursuant to 37 CFR 1.137(b) to revive the application; and

(3) the delay in filing a grantable petition pursuant to 37 CFR 1.137(b) to revive the application.

Currently, the delay has not been shown to the satisfaction of the Director to be unintentional for periods (1) and (2).

As to Period (1):

The patent statute at 35 U.S.C. § 41(a)(7) authorizes the Director to revive an "unintentionally abandoned application." The legislative history of Public Law 97-247 reveals that the purpose of 35 U.S.C. § 41(a)(7) is to permit the Office to have more discretion than in 35 U.S.C. §§ 133 or 151 to revive abandoned applications in appropriate circumstances, but places a limit on this discretion, stating that "[u]nder this section a petition accompanied by either a fee of $500 or a fee of $50 **would not be granted where the abandonment** or the failure to pay the fee for issuing the patent **was intentional** as opposed to being unintentional or unavoidable." [emphasis added]. See H.R. Rep. No. 542, 97th Cong., 2d Sess. 6-7 (1982), *reprinted in* 1982 U.S.C.C.A.N. 770-71. The revival of an intentionally abandoned application is antithetical to the meaning and intent of the statute and regulation.

35 U.S.C. § 41(a)(7) authorizes the Director to accept a petition "for the revival of an unintentionally abandoned application for a patent." As amended December 1, 1997, 37 CFR 1.137(b)(3) provides that a petition under 37 CFR 1.137(b) must be accompanied by a statement that the delay was unintentional, but provides that "[t]he Commissioner may require additional information where there is a question whether the delay was unintentional." Where, as here, there is a question whether the initial delay was unintentional, the petitioner must meet the burden of establishing that the delay was unintentional within the meaning of 35 U.S.C. § 41(a)(7) and 37 CFR 1.137(b). *See* In re Application of G, 11 USPQ2d 1378, 1380 (Comm'r Pats. 1989); 37 CFR 1.137(b). Here, in view of the inordinate delay (almost 7 years) in resuming prosecution, there is a question whether the entire delay was unintentional. Petitioner should note that the issue is not whether some of the delay was unintentional by any party; rather, the issue is whether the entire delay has been shown to the satisfaction of the Director to be unintentional.

The question under 37 CFR 1.137(b) for period (1) is whether the delay on the part of the party having the right or authority to reply to avoid abandonment (or not reply) was unintentional. Accordingly, any renewed petition must clearly explain what effort(s) was made to further reply to the outstanding Office action and, further, why no reply was filed. As David Catanzaro was the sole inventor, he must explain why the delay in this application does not result from a deliberate course of action (or inaction). As the courts have made clear, it is pointless for the USPTO to revive a long abandoned application without an adequate showing that the delay did not result from a deliberate course of action. *See* Lawman Armor v. Simon, 2005 U.S. Dist. LEXIS 10843, 74 USPQ2d 1633 (DC EMich 2005); Field Hybrids, LLC v. Toyota Motor Corp., 2005 U.S. Dist. LEXIS 1159 (D. Minn Jan. 27, 2005); Lumenyte Int'l Corp. v. Cable Lite Corp., Nos. 96-1011, 96-1077, 1996 U.S. App. LEXIS 16400, 1996 WL 383927 (Fed. Cir. July 9, 1996) (unpublished) (patents held unenforceable due to a finding of inequitable conduct in submitting an inappropriate statement that the abandonment was unintentional).

As to Period (2):

Likewise, where the applicant deliberately chooses not to seek or persist in seeking the revival of an abandoned application, or where the applicant deliberately chooses to delay seeking the revival of an abandoned application, the resulting delay in seeking revival of the abandoned application cannot be considered as "unintentional" within the meaning of 37 CFR 1.137(b). *See* MPEP 711.03(c).

The language of both 35 U.S.C. § 41(a)(7) and 37 CFR 1.137(b) are clear and unambiguous, and, furthermore, without qualification. That is, the delay in filing the reply during prosecution, as

well as in filing the petition seeking revival, must have been, without qualification, "unintentional" for the reply to now be accepted on petition. The Office requires that the entire delay be at least unintentional as a prerequisite to revival of an abandoned application to prevent abuse and injury to the public. *See* H.R. Rep. No. 542, 97th Cong., 2d Sess. 7 (1982), reprinted in 1982 U.S.C.C.A.N. 771 ("[i]n order to prevent abuse and injury to the public the Commissioner . . . could require applicants to act promptly after becoming aware of the abandonment"). The December 1997 change to 37 CFR 1.137 did not create any new right to overcome an intentional delay in seeking revival, or in renewing an attempt at seeking revival, of an abandoned application. *See* Changes to Patent Practice and Procedure; Final Rule Notice, 62 Fed. Reg. 53131, 53160 (October 10, 1997), 1203 Off. Gaz. Pat. Office 63, 87 (October 21, 1997), which clearly stated that any protracted delay (here, over 2 years) could trigger, as here, a request for additional information. As the courts have since made clear, a protracted delay in seeking revival, as here, requires a petitioner's detailed explanation seeking to excuse the delay as opposed to USPTO acceptance of a general allegation of unintentional delay. *See* Lawman Armor v. Simon, 2005 U.S. Dist. LEXIS 10843, 74 USPQ2d 1633, at 1637-8 (DC EMich 2005); Field Hybrids, LLC v. Toyota Motor Corp., 2005 U.S. Dist. LEXIS 1159 (D. Minn Jan. 27, 2005) at *21-*23. Statements are required from David Catanzaro and the responsible person(s) having firsthand knowledge of the circumstances surrounding the protracted delay, after the abandonment date, in seeking revival.

As noted in MPEP 711.03(c)(II), subsection D, in instances in which such petition was not filed within 1 year of the date of abandonment of the application, applicants should include:

> (A) the date that the applicant first became aware of the abandonment of the application; and
> (B) a showing as to how the delay in discovering the abandoned status of the application occurred despite the exercise of due care or diligence on the part of the applicant.

In either instance, applicant's failure to carry the burden of proof to establish that the "entire" delay was "unavoidable" or "unintentional" may lead to the denial of a petition under 37 CFR 1.137(b), regardless of the circumstances that originally resulted in the abandonment of the application. *See also* New York University v. Autodesk, 2007 U.S. DIST LEXIS, U.S.District LEXIS 50832, *10 -*12 (S.D.N.Y. 2007)(protracted delay in seeking revival undercuts assertion of unintentional delay).

Any renewed petition may be addressed as follows:

By Mail:
Mail Stop PETITION
Commissioner for Patents
P. O. Box 1450
Alexandria, VA 22313-1450

By hand:
U. S. Patent and Trademark Office

Customer Service Window, Mail Stop Petitions
Randolph Building
401 Dulany Street
Alexandria, VA 22314

The centralized facsimile number is **(571) 273-8300.**

Correspondence regarding this decision may also be filed through the electronic filing system of the USPTO.

To expedite consideration, petitioner may wish to contact Alicia Kelley regarding the filing of the renewed petition under 37 CFR 1.137(b).

Telephone inquiries concerning this decision should also be directed to Alicia Kelley at (571) 272-6059.

Sherry D. Brinkley
Petitions Examiner
Office of Petitions

UNITED STATES PATENT AND TRADEMARK OFFICE

Commissioner for Patents
United States Patent and Trademark Office
P.O. Box 1450
Alexandria, VA 22313-1450
www.uspto.gov

DAVID CATANZARO
286 UPPER POWDERLY, STREET
CARBONDALE, PA 18407

MAILED

SEP 0 9 2009

OFFICE OF PETITIONS

In re Application of	:	
David Cantanzaro	:	
Application No. 09/505,791	:	ON PETITION
Filed: February 17, 2000	:	
Attorney Docket No. None	:	

This is a decision on the renewed petition under the unintentional provisions of 37 CFR 1.137(b), filed October 8, 2008, to revive the above-identified application.

The petition is **DISMISSED**.

Any request for reconsideration of this decision must be submitted within TWO (2) MONTHS from the mail date of this decision. Extensions of time under 37 CFR 1.136(a) are permitted. The reconsideration request should include a cover letter entitled "Renewed Petition under 37 CFR 1.137(b)." This is **not** a final agency action within the meaning of 5 U.S.C. § 704.

This application became abandoned for failure to timely pay the issue fee on or before January 7, 2002, as required by the Notice of Allowance and Fee(s) Due mailed October 5, 2001 which set a statutory period for reply of three (3) months. Accordingly, the application became abandoned on January 8, 2002. A Notice of Abandonment was mailed October 28, 2002.

A grantable petition under 37 CFR 1.137(b) must be accompanied by: (1) the required reply, unless previously filed; (2) the petition fee as set forth in 37 CFR 1.17(m); and (3) a showing to the satisfaction of the Director that the entire delay in filing the required reply from the due date for the reply until the filing of a grantable petition pursuant to 37 CFR 1.137(b) was unintentional. Where there is a question as to whether either the abandonment or the delay in filing a petition under 37 CFR 1.137 was unintentional, the Director may require additional information. See MPEP 711.03(c)(II)(C) and (D).

The instant petition lacks item (3). Although, the petitioner asserts that the entire delay in filing the required reply from the due date for the reply until the filing of a grantable petition pursuant to 37 CFR 1.137(b) was unintentional due to "extreme economic hardship", the petitioner did not

provide a sufficient showing of financial difficulty. The petitioner submitted supporting documentation in the form of an IRS e-file Signature Authorization form from 2002 and Schedule C – Profit or Loss From Business forms from tax return years; 2003, 2004, 2005, 2006 and 2007. However, the complete tax return for the above mentioned years was not submitted. For example, Schedule C is a portion of Form 1040, for that reason both forms must be submitted.

Further, a complete showing that the entire delay in filing the required reply from October 5, 2001 to the due date for the reply, January 7, 2002, until the filing of a grantable petition pursuant to 37 CFR 1.137(b), July 1, 2008, must be explained. Such a showing must be supported by a complete explanation of the applicant's financial condition during the entire period which must include income, expenses, assets, credit and obligations. The applicant is reminded to submit redacted copies of the above mentioned documents removing all confidential information such as a social security number and so forth.

While the USPTO is not unsympathetic to the applicant's financial situation, the petitioner has not met his burden of proof to establish to the satisfaction of the Director that the **entire** delay in prosecution was herein unintentional within the meaning of 37 CFR 1.137(b).

Further correspondence with respect to this matter should be addressed as follows:

By Mail: Mail Stop PETITION
Commissioner for Patents
P. O. Box 1450
Alexandria, VA 22313-1450

By Hand: U. S. Patent and Trademark Office
Customer Service Window, Mail Stop Petitions
Randolph Building
401 Dulany Street
Alexandria, VA 22314

The centralized facsimile number is **(571) 273-8300.**

Telephone inquiries concerning this decision should be directed to Alicia Kelley at (571) 272-6059.

David Bucci
Petitions Examiner
Office of Petitions

UNITED STATES PATENT AND TRADEMARK OFFICE

Commissioner for Patents
United States Patent and Trademark Office
P.O. Box 1450
Alexandria, VA 22313-1450
www.uspto.gov

DAVID CATANZARO
286 UPPER POWDERLY, STREET
CARBONDALE, PA 18407

MAILED

NOV 10 2009

OFFICE OF PETITIONS

In re Application of
David Cantanzaro
Application No. 09/505,791
Filed: February 17, 2000
Attorney Docket No. None

DECISION ON PETITION

This is a decision on the second renewed petition under 37 CFR 1.137(b), filed September 28, 2009 to revive the above-identified design application.

The second renewed petition is **GRANTED**.

This application became abandoned for failure to timely pay the issue fee on or before January 7, 2002, as required by the Notice of Allowance and Fee(s) Due mailed October 5, 2001 which set a statutory period for reply of three (3) months. Accordingly, the application became abandoned on January 8, 2002. A Notice of Abandonment was mailed October 28, 2002.

On July 1, 2008, a petition under 37 CFR 1.137(b) was filed; consequently, the petition was dismissed in a decision mailed August 27, 2008. The first renewed petition was filed October 8, 2008; again, the first renewed petition was dismissed in a decision mailed September 9, 2009, asking the petitioner to provide additional information in showing that the entire delay in filing the required reply was unintentional. In response, the present second renewed petition was filed.

The second renewed petition satisfies the requirements of 37 CFR 1.137(b) in that petitioner has supplied (1) the reply in the form of payment of the issue fee of $720, (2) the petition fee of $770, and (3) an adequate statement of unintentional delay. Accordingly, the failure to timely submit the issue fee as required by the Notice of Allowance is accepted as being unintentionally delayed.

Petitioner is reminded that confidential information for example, such as a social security number and so forth should be redacted from any documents submitted to the Office to avoid publication or availability to the public thereof.

Telephone inquiries concerning this decision should be directed to Alicia Kelley at (571)272-6059.

Brian Brown
Petitions Examiner
Office of Petitions

UNITED STATES PATENT AND TRADEMARK OFFICE

COMMISSIONER FOR PATENTS
UNITED STATES PATENT AND TRADEMARK OFFICE
P.O. BOX 1450
ALEXANDRIA, VA 22313-1450
www.uspto.gov

FEB -1 2005

In re Application of	:	
James E. Arnold	:	NOTICE OF WITHDRAWAL
Serial No. 09/505,803	:	FROM ISSUE
Filed: February 17, 2000	:	UNDER 37 CFR 1.313(b)
For: METHODS FOR FORMING METAL	:	
PARTS HAVING SUPERIOR SURFACE	:	
CHARACTERISTICS	:	

The above-identified application is hereby withdrawn from issue after payment of the issue fee due to unpatentability of one or more claims. See 37 CFR 1.313(b)(3).

The issue fee is refundable upon written request. If, however, the application is again found allowable, the issue fee can be applied toward payment of the issue fee in the amount identified on the new Notice of Allowance and Issue Fee Due upon written request. This request and any balance due must be received on or before the due date noted in the new Notice of Allowance in order to prevent abandonment of the application.

Telephone inquiries should be directed to Peter Vo, SPE, Art Unit 3726 at (571) 272-4690. The above-identified application is being forwarded to the examiner for prompt appropriate action, including notifying applicant of the new status of this application.

E.R. Kazenske, Director
Technology Center 3700

John J. Daniels, Esq.
511 Foot Hills Road
Higganum, CT 06441

UNITED STATES PATENT AND TRADEMARK OFFICE

Commissioner for Patents
United States Patent and Trademark Office
P.O. Box 1450
Alexandria, VA 22313-1450
www.uspto.gov

REENA KUYPER, ESQ.
BYARD NILSSON, ESQ.
9255 SUNSET BOULEVARD
SUITE 810
LOS ANGELES CA 90069

COPY MAILED

DEC 0 5 2007

OFFICE OF PETITIONS

In re Application of Ronald Katz Application No. 09/505915 Filing or 371(c) Date: 02/17/2000 Attorney Docket Number: 245/248(6046-101D8)	: : : : : :	DECISION

This is a decision on the correspondence entitled "Letter requesting Withdrawal of Improper Notice of Abandonment Under MPEP 711.03 and 37 CFR 1.137," filed October 22, 2007, requesting reconsideration and withdrawal of the Notice of Abandonment. The petition is properly treated under 37 CFR 1.181.

This Petition is hereby **granted**.

The above-identified application became abandoned for failure to timely and properly reply to the non-final Office action, mailed January 25, 2007. The Office action set a three (3) month period for reply. Extensions of time were available under 37 CFR 1.136(a). No response having been received, the application became abandoned April 26, 2007. A Notice of Abandonment was mailed August 23, 2007.

Applicant's Assertion

Applicant files the instant petition and asserts that a timely reply to the Office action was filed on July 25, 2007, including a request for a three (3) month extension of time and fee. In support of this assertion, Applicant files a copy of the response, and a copy of his return-receipt postcard.

Analysis and conclusion

A review of the response reveals that the response contained a Certificate of Mailing under 37 CFR 1.8, certifying that the response was mailed to this Office on July 25, 2007. The Certificate of Mailing was executed by Petitioner herein. A review of the return-receipt postcard reveals that this Office acknowledged receipt of the response on August 14, 2007. A review of office finance records reveal that this Office charged the fee for a three (3) month extension of time to Petitioner's deposit account on August 14, 2007.

In view of the foregoing, the petition is granted. The holding of abandonment is hereby withdrawn.

The application will be referred to Technology Center Art Unit 2614 for processing of the response, and for continued examination in due course.

Telephone inquiries concerning this matter should be directed to the undersigned at (571) 272-3232.

Derek L. Woods
Attorney
Office of Petitions

UNITED STATES PATENT AND TRADEMARK OFFICE

Commissioner for Patents
United States Patent and Trademark Office
P.O. Box 1450
Alexandria, VA 22313-1450
www.uspto.gov

REENA KUYPER, ESQ.
BYARD NILSSON, ESQ.
9255 SUNSET BOULEVARD
SUITE 810
LOS ANGELES CA 90069

COPY MAILED

NOV 19 2008

OFFICE OF PETITIONS

In re Application of :
Katz :
Application No. 09/505,915 : ON PETITION
Filed: February 17, 2000 :
Attorney Docket No. 6046-101D8 :
For: COMMERCIAL PRODUCT ROUTING SYSTEM WITH VIDEO VENDING CAPABILITY

This is a decision on the petition under 37 CFR 1.181, filed November 2, 2008, requesting that the Office withdraw the holding of abandonment of the above-identified application.

The petition under 37 CFR 1.181 is **GRANTED**.

This application was held abandoned for failure to respond in a timely and proper manner to the final Office action, mailed March 21, 2008, which set forth an extendable three (3) month period for reply. Applicants filed a petition for a three month extension of time, accompanied by the required fee, and a Notice of Appeal, accompanied by the required fee, on September 29, 2008 (certificate of mailing date September 22, 2008). A Notice of Abandonment was mailed on October 29, 2008.

Petitioner requests withdrawal of the holding of abandonment based on the assertion that the request for a three month extension of time and Notice of Appeal were timely filed. The undersigned finds this argument completely convincing, as these documents are present in the application file and Office financial records show that the required three month extension of time fee and the required Notice of Appeal fee were charged on accounting date September 29, 2008. The certificate of mailing date for the filing was September 22, 2008 (a Monday). Therefore, the Notice of Appeal was timely filed.

The petition under 37 CFR 1.181 is **granted**, the holding of abandonment is withdrawn, and the October 29, 2008 Notice of Abandonment is **vacated**. No petition fee has been or will be charged in connection with this matter.

The application file will be forwarded to Technology Center A.U. 2614 to await receipt of a proper follow-up submission to the Notice of Appeal.

Telephone inquiries pertaining to this matter may be directed to the undersigned at (571) 272-3230.

Shirene Willis Brantley

Shirene Willis Brantley
Senior Petitions Attorney
Office of Petitions

UNITED STATES PATENT AND TRADEMARK OFFICE

Commissioner for Patents
United States Patent and Trademark Office
P.O. Box 1450
Alexandria, VA 22313-1450
www.uspto.gov

MAIL

APR 23 2010

DIRECTOR'S OFFICE
TECHNOLOGY CENTER 2600

REENA KUYPER, ESQ.
BYARD NILSSON, ESQ.
9229 SUNSET BOULEVARD
SUITE 630
LOS ANGELES CA 90069

In re Application of:
KATZ, RONALD A.
Application Serial No.: 09/505,915
Filed: February 17, 2000
For: **COMMERCIAL PRODUCT ROUTING SYSTEM WITH VIDEO VENDING CAPABILITY**

DECISION
ON PETITION

This is a decision on the petition to make special, filed on April 3, 2010 under MPEP § 707.02.

Petitioner requests that the application be considered special.

MPEP § 708.01 [R-2] List of Special Cases, states in part:
(I) Applications pending more than 5 years, including those which, by relation to a prior United States application, have an effective pendency of more than 5 years. See MPEP § 707.02. [emphasis added]

In accordance with MPEP §§ 707.02 and 708.01(I), applications pending over 5 years, including those which by relation to a prior United States application, should be considered special. This application by virtue of its prolonged pendency is considered special in accordance with PTO policy. A petition to effect such status is not necessary. Any request for interview should be initiated via the Examiner.

Accordingly, the petition is **DISMISSED AS MOOT.**

Kenneth A. Wieder
Special Program Examiner
Technology Center 2600
Communications

UNITED STATES PATENT AND TRADEMARK OFFICE

Commissioner for Patents
United States Patent and Trademark Office
P.O. Box 1450
Alexandria, VA 22313-1450
www.uspto.gov

Mitchell A. Stein, Esq.
Stein Law, P.C.
24 Woodbine Avenue,
Suite 4
Northport NY 11768

COPY MAILED
SEP 18 2006
OFFICE OF PETITIONS

In re Application of :
Robert Krause :
Application No. 09/505,947 : ON PETITION
Filed: February 15, 2000 :
Attorney Docket No. Krause-01 :

This is a decision on petition to withdraw the holding of abandonment under 37 CFR 1.181 filed July 12, 2006.

The petition to withdraw the holding of abandonment is **GRANTED**.

This application was held abandoned August 20, 2005 for failure to timely reply to the non-final Office Action mailed on May 19, 2005. The non-final Office Action set a three (3) month extendable time period for reply. This decision precedes the mailing of a Notice of Abandonment.

Petitioner asserts that a reply to the non-final Office Action and a three month extension of time were submitted on November 25, 2005. Petitioner insists that the reply was timely because it was accompanied by a certificate of mailing dated November 21, 2005. As evidence, petitioner has submitted a copy of the reply which included an amendment and a three month extension of time. The reply contains a certificate of mailing dated November 21, 2005 pursuant to 37 CFR 1.8.

A review of the record shows that the amendment, request for three month extension of time and the appropriate fee were received on November 25, 2005. The response is accompanied by a certificate of mailing dated November 21, 2005. The reply is deemed timely pursuant to MPEP 512 . If the period set for taking an action in the U.S. Patent and Trademark Office ends on a Saturday, Sunday, or Federal holiday within the District of Columbia (37 CFR 1.7), the action will be considered to be timely if deposited in the United States mail or transmitted by facsimile and certified under 37 CFR 1.8(a) on the next succeeding day which is not a Saturday, Sunday, or a Federal holiday. In this instance, November 19, 2005 was a Saturday.

As such the next business day was November 21, 2005.

However, petitioner should note that the receipt date is the date which is entered in Office records, not the certificate of mailing date.

The Notice of Abandonment is hereby vacated and the holding of abandonment is withdrawn.

The application file is being forwarded to Technology Center 3600 for further processing of the amendment submitted on November 25, 2005.

Telephone inquiries concerning this matter should be directed to the undersigned at (571) 272-3215.

Charlema R. Grant

Charlema R. Grant
Petitions Attorney
Office of Petitions

UNITED STATES DEPARTMENT OF COMMERCE
Patent and Trademark Office
ASSISTANT SECRETARY OF COMMERCE AND
COMMISSIONER OF PATENTS AND TRADEMARKS
Washington, DC 2023

January 9, 2003

Stephen A. Becker
McDermott, Will & Emery
600 13th Street, N.W.
Washington, DC 20005-3096

In re application of:
Yoshiyuki Suetsugu, et al
Serial No.: 09/505,989
Filed: February 17, 2000

DECISION ON PETITION

For: OPTICAL CABLE

This is a decision on the petition received on January 9, 2002, to withdraw the holding of abandonment in the above-identified application.

The above-identified application became abandoned for failure to reply within the meaning of 37 C.F.R. 1.113 in timely manner to the Notice to File Missing Parts of Application mailed May 8, 2000. Which set a shortened statutory period for reply of two (2) months. Accordingly, this application became abandoned July 11, 2000. The notice of abandonment was mailed December 5, 200l

On January 9, 2002, the office received a communication from the attorney of record. Enclosed was an acknowledgment that the attorney responded to the Notice to File Missing Parts on July 5, 2000.

The evidence submitted is sufficient to establish that the petitioners responded to the Notice to File Missing Parts on July 5, 2000.

The petition is hereby GRANTED.

The application has been completed for release to Technology Center 2874.

The necessary fees to complete the above application will be charge to Deposit Account 50-0417.

Telephone inquiries concerning this matter may be directed to Doshie E. Day at (703) 308-3640.

Doshie E. Day
Program Management Assistant
Office Initial Patent Examination

UNITED STATES PATENT AND TRADEMARK OFFICE

Commissioner for Patents
United States Patent and Trademark Office
P.O. Box 1450
Alexandria, VA 22313-1450
www.uspto.gov

Paper No. 33

Edgar R Cataxinos
Trask Britt & Rossa
PO Box 2550
Salt Lake City, UT 84110

COPY MAILED
JUN 1 6 2004
OFFICE OF PETITIONS

In re Application of

Trung T. Doan

Application No. 09/506,204

Filed: February 17, 2000

Attorney Docket No. 3025.1US (95-1003.1)

DECISION ON PETITION

This is a decision on the petition under 37 CFR 1.137(b), filed June 7, 2004, to revive the above-identified application.

The petition is **GRANTED**.

The above-cited application became abandoned for failure to seek court review of the February 26, 2004, decision of the Board of Patent Appeals and Interferences within the statutory two-month period. The application became abandoned on April 27, 2004. A Notice of Abandonment was mailed on May 14, 2004.

The Request for Continued Examination and amendment filed June 7, 2004, are noted and made of record.

The application is being forwarded to Technology Center 2800 for further processing.

Telephone inquiries concerning this decision should be directed to the undersigned at (703) 305-0010.

Kenya A. McLaughlin
Petitions Attorney
Office of Petitions

UNITED STATES PATENT AND TRADEMARK OFFICE

Commissioner for Patents
United States Patent and Trademark Office
P.O. Box 1450
Alexandria, VA 22313-1450
www.uspto.gov

Paper No.

FITZPATRICK CELLA HARPER & SCINTO
30 ROCKEFELLER PLAZA
NEW YORK, NY 10112

COPY MAILED

OCT 26 2004

OFFICE OF PETITIONS

ON PETITION

In re Application of	:
Masafumi Kyogaku, et al.	:
Application No. 09/506,289	:
Filed: February 18, 2000	:
Attorney Docket No. 35.C14384	:

This is a decision on the petition, filed October 19, 2004, under 37 CFR 1.313(c)(2) to withdraw the above-identified application from issue after payment of the issue fee.

The petition is **GRANTED**.

The above-identified application is withdrawn from issue for consideration of a submission under 37 CFR 1.114 (request for continued examination). See 37 CFR 1.313(c)(2).

Petitioner is advised that the issue fee paid on January 9, 2004, using a Certificate of Mailing or Transmission under 37 CFR 1.8 dated January 6, 2004, in the above-identified application cannot be refunded. If, however, the above-identified application is again allowed, petitioner may request that it be applied towards the issue fee required by the new Notice of Allowance. [1]

Telephone inquiries relating to this decision should be directed to the undersigned at (703) 305-9220.

The application is being forwarded to Technology Center AU 2818 for further processing of the request for continued examination under 37 CFR 1.114.

Sherry D. Brinkley
Petitions Examiner
Office of Petitions
Office of the Deputy Commissioner
for Patent Examination Policy

[1] The request to apply the issue fee to the new Notice may be satisfied by completing and returning the new Issue Fee Transmittal Form PTOL-85(b), which includes the following language thereon: "Commissioner for Patents is requested to apply the Issue Fee and Publication Fee (if any) or re-apply any previously paid issue fee to the application identified above." Petitioner is advised that, whether a fee is indicated as being due or not, the Issue Fee Transmittal Form **must** be completed and timely submitted to avoid abandonment. Note the language in bold text on the first page of the Notice of Allowance and Fee(s) Due (PTOL-85).

UNITED STATES PATENT AND TRADEMARK OFFICE

Commissioner for Patents
United States Patent and Trademark Office
Washington, D.C. 20231
www.uspto.gov

Paper No. 5

COPY MAILED

MAR 0 5 2001

OFFICE OF PETITIONS
A/C PATENTS

Nixon & Vanderhye, PC
1100 North Glebe Road
8th Floor
Arlington, VA 22201-4714

In re Application of
Spinoza
Application No. 09/506,361
Filed: February 18, 2000
Attorney Docket No. 604-540

DECISION GRANTING
PETITION

This is a decision on the petition filed June 21, 2000, to accord the above-identified application a filing date of February 18, 2000.

On February 18, 2000, the application was deposited.

On April 21, 2000, the Office of Initial Patent Examination mailed a Notice stating that the specification was missing and that a filing date would be assigned upon receipt of a complete specification including at least one claim.

In response, the present petition was filed alleging that a specification was deposited on February 18, 2000.

A review of the record indicates that petitioner's transmittal sheet claimed "priority" of PCT/GB98/02502. A copy of that "priority" document, along with copies of several other patents, was submitted. Per the instant petition, petitioner intended the "priority" document to serve as the specification for the instant application. There was no clear indication of petitioner's intent. Each page of the specification, claims, and drawings contains the header, "WO99/10250 ... PCT/GB98/02502." The papers at issue were therefore construed as a copy of the "priority" application and not as a new application. For the foregoing reasons, although the application will be accorded a filing date of February 18, 2000, the request for a refund of the petition fee is denied.

In view of the above, the petition is **granted** to the extent indicated above.

The Application is being returned to the Office of Initial Patent Examination for further processing with a filing date of February 18, 2000, using the application papers filed on February 18, 2000 (including papers with the header "WO 99/10250").

Telephone inquiries should be directed to Petitions Attorney Steven Brantley at (703) 306-5683.

Brantley

Beverly M. Flanagan
Supervisory Petitions Examiner
Office of Petitions
Office of the Deputy Commissioner
for Patent Examination Policy

UNITED STATES PATENT AND TRADEMARK OFFICE

COMMISSIONER FOR PATENTS
UNITED STATES PATENT AND TRADEMARK OFFICE
P.O. BOX 1450
ALEXANDRIA, VA 22313-1450
www.uspto.gov

FULBRIGHT & JAWORSKI L.L.P.
600 CONGRESS AVE.
SUITE 2400
AUSTIN TX 78701

COPY MAILED
SEP 13 2007
OFFICE OF PETITIONS

In re Application of	:	
Marc Howard Spinoza	:	
Application No. 09/506,361	:	DECISION ON PETITION
Filed: February 18, 2000	:	
Attorney Docket No. FIFW.019US	:	

This is a decision on the petition under 37 CFR 1.137(b), filed February 22, 2007, to revive the above-identified application.

The petition is **GRANTED.**

The application became abandoned for failure to timely reply within the meaning of 37 CFR 1.113 to the final Office action mailed June 5, 2006, which set a shortened statutory period for reply of three (3) months. No extensions of time were obtained under the provisions of 37 CFR 1.136(a). Accordingly, the application became abandoned on September 6, 2006. A Notice of Abandonment was mailed on December 15, 2006.

The petition satisfies the requirements of 37 CFR 1.137(b) in that petitioner has supplied (1) the required reply in the form of an amendment, (2) the petition fee of $750, and (3) a proper statement of unintentional delay. Accordingly, the failure to timely reply to the final Office action of June 5, 2006 is accepted as being unintentionally delayed.

This application is being referred to Technology Center AU for appropriate action in the normal course of business on the reply received April 12, 2007.

Telephone inquiries concerning this decision should be directed to the undersigned at (571) 272-3218.

Frances Hicks
Petitions Examiner
Office of Petitions

UNITED STATES PATENT AND TRADEMARK OFFICE

Commissioner for Patents
United States Patent and Trademark Office
P.O. Box 1450
Alexandria, VA 22313-1450
www.uspto.gov

FITZPATRICK CELLA HARPER & SCINTO
30 ROCKEFELLER PLAZA
NEW YORK NY 10112

COPY MAILED

OCT 24 2005

OFFICE OF PETITIONS

ON PETITION

In re Application of	:	
Kiyohide Sato et al	:	
Application No. 09/506,382	:	
Filed: February 18, 2000	:	
Attorney Docket No. 2355.11107	:	

This is a decision on the petition, filed October 18, 2005, under 37 CFR 1.313(c)(2) to withdraw the above-identified application from issue after payment of the issue fee.

The petition is **GRANTED.**

The above-identified application is withdrawn from issue for consideration of a submission under 37 CFR 1.114 (request for continued examination). See 37 CFR 1.313(c)(2).

Petitioner is advised that the issue fee paid on March 17, 2005 in the above-identified application cannot be refunded. If, however, the above-identified application is again allowed, petitioner may request that it be applied towards the issue fee required by the new Notice of Allowance.[1]

Telephone inquiries should be directed to the undersigned at (571) 272-3208.

The examiner of Technology Center AU 2672 will consider the request for continued examination under 37 CFR 1.114.

Karen Creasy
Petitions Examiner
Office of Petitions
Office of the Deputy Commissioner
for Patent Examination Policy

---

[1] The request to apply the issue fee to the new Notice may be satisfied by completing and returning the new Issue Fee Transmittal Form PTOL-85(b), which includes the following language thereon: "Commissioner for Patents is requested to apply the Issue Fee and Publication Fee (if any) or re-apply any previously paid issue fee to the application identified above." Petitioner is advised that, whether a fee is indicated as being due or not, the Issue Fee Transmittal Form **must** be completed and timely submitted to avoid abandonment. Note the language in bold text on the first page of the Notice of Allowance and Fee(s) Due (PTOL-85).

UNITED STATES
PATENT AND
TRADEMARK OFFICE

UNDER SECRETARY OF COMMERCE FOR INTELLECTUAL PROPERTY
AND DIRECTOR OF THE UNITED STATES PATENT AND TRADEMARK OFFICE
PO BOX 1450, ALEXANDRIA, VA 22313-1450
WWW.USPTO.GOV

AUG 8 2003

ALLEN R. BAUM
BURNS, DOANE, SWECKER & MATHIS, L.L.P.
P.O. BOX 1404
ALEXANDRIA VA 22313-1404

#27

In re Application of
Lawrence R. Green et al
Serial No.: 09/506,430
Filed: February 17, 2000
Attorney Docket No.: 033599-015

: WITHDRAWAL OF ABANDONMENT

This is in response to the petition under 37 CFR 1.181, filed July 14, 2003, requesting revival of the above-identified application based on non-receipt of a Notice of Allowance and Issue Fee Due and Notice of Allowability.

A review of the file history shows that an Office action was mailed to applicants at the correspondence address of "Townsend and Townsend and Cres, Two Embarcadero Center, 8th Floor, San Francisco, CA 94111". On October 10, a reply was made by Sherry M. Carty of the firm of Burns, Doane, Swecker & Mathis. The last paragraph of page 5 of the reply states that they are the authorized representative of the current owner of the application and that a new assignment and power of attorney document are in preparation. However, no request to change the mailing address (or power of attorney) was included with the reply or subsequently filed until June 3, 2003. The examiner therefor mailed a new Office action to the addressee of record on December 10, 2002, setting a three month shortened statutory period for reply. When no reply was received, the application became abandoned by operation of law on June 11, 2003, although a Notice of Abandonment has yet to be mailed to applicants. Applicants' new attorney of record states that the Office action of December 10, 2002, was never received. However, it was mailed to the correspondence address of record (Townsend and Townsend and Crew) according to Office records. In order to show non-receipt of the Office action docket or mail log records of the previous attorney would have to be provided evidencing non-receipt. See M.P.E.P. 711.03(c).

Applicants' petition is **DISMISSED** for the reasons stated above without prejudice to applicants filing a renewed petition meeting the requirements of M.P.E.P. 711.03(c). Any renewed petition under 37 CFR 1.181 or 37 CFR 1.137 must be filed within TWO MONTHS of the mailing date of this decision in order to be considered timely.

The application will be forwarded to an appropriate storage facility.

Should there be any questions regarding this decision, please contact William R. Dixon, Jr., by mail addressed to Director, Technology Center 1600, PO BOX 1450, ALEXANDRIA, VA 22313-1450, or by telephone at (703) 308-3824 or by facsimile transmission at (703) 305-7230.

Bruce M. Kisliuk
Director, Technology Center 1600

UNITED STATES PATENT AND TRADEMARK OFFICE

COMMISSIONER FOR PATENTS
UNITED STATES PATENT AND TRADEMARK OFFICE
P.O. BOX 1450
ALEXANDRIA, VA 22313-1450
WWW.USPTO.GOV

Paper No. None

Allen R. Baum
Burns, Doane, Swecker & Mathis, L.L.P.
P.O. Box 1404
Alexandria VA 22313-1404

COPY MAILED

JAN 15 2004

OFFICE OF PETITION

In re Application of
Lawrence R. Green and John W. Blasecki
Application No. 09/506,430
Filed: February 17, 2000
Attorney Docket No. 15542-002310
Title: PHARMACEUTICAL ANGIOSTATIC DIPEPTIDE COMPOSITIONS AND METHODS OF USE THEREOF

DECISION ON PETITION

This is a decision on the petition filed on October 2, 2003, under 37 C.F.R. §1.137(b)[1] to withdraw the holding of abandonment.

The above-identified application became abandoned for failure to reply in a timely manner to the non-final Office action, mailed December 10, 2002, which set a shortened statutory period for reply of three (3) months. No response was received, and no extensions of time under the provisions of 37 C.F.R. §1.136(a) were requested. Accordingly, the above-identified application became abandoned on March 11, 2003.

On July 14, 2003, petitioner filed a petition under 37 C.F.R. §1.181(a), to withdraw the holding of abandonment, which was dismissed via the mailing of a decision from Technology Center 1600 on August 8, 2003.

On November 20, 2003, the Technology Center reversed this position, sua sponte, and withdrew the holding of abandonment via the mailing of a notice.

---

1 A grantable petition pursuant to 37 CFR 1.137(b) must be accompanied by:

(1) The reply required to the outstanding Office action or notice, unless previously filed;
(2) The petition fee as set forth in § 1.17(m);
(3) A statement that the entire delay in filing the required reply from the due date for the reply until the filing of a grantable petition pursuant to this paragraph was unintentional. The Commissioner may require additional information where there is a question whether the delay was unintentional, and;
(4) Any terminal disclaimer (and fee as set forth in § 1.20(d)) required pursuant to paragraph (d) of this section.

Consequently, the petition under 37 CFR §1.137(b)[2] is **DISMISSED AS MOOT**.

The application is being forwarded to the Technology Center 1600 for processing of the amendment filed with this petition under 37 C.F.R. §1.137(b) on October 2, 2003.

Telephone inquiries concerning this decision should be directed to the undersigned at (703) 305-0011.

Paul Shanoski
Attorney
Office of Petitions
Office of the Deputy Commissioner
for Patent Examination Policy

2 The petition fee has been credited to Petitioner's Deposit Account, as authorized in the petition.

UNITED STATES PATENT AND TRADEMARK OFFICE

Commissioner for Patents
United States Patent and Trademark Office
P.O. Box 1450
Alexandria, VA 22313-1450
www.uspto.gov

FINNEGAN, HENDERSON, FARABOW,
GARRETT & DUNNER, LLP
1300 I STREET, NW
WASHINGTON, DC 20005

COPY MAILED

SEP 0 2 2004

OFFICE OF PETITIONS

ON PETITION

In re Application of :
Alain Bethune, et al. :
Application No. 09/506,795 :
Filed: February 18, 2000 :
Attorney Docket No. 05725.0533-00000 :

This is a decision on the petition under 37 CFR 1.137(b), filed May 12, 2004, to revive the above-identified application.

The petition is **GRANTED**.

The above-identified application became abandoned for failure to reply in a timely manner to the final Office action mailed November 18, 2003, which set a shortened statutory period for reply of three (3) months. No extensions of time under the provisions of 37 CFR 1.136(a) were obtained. Accordingly, the application became abandoned on February 19, 2004.

Receipt is acknowledged of the Amendment filed May 12, 2004, with the instant petition.

A review of the record indicates that a Request for Continued Examination (RCE) was submitted on April 2, 2004 and again on May 12, 2004. The Amendment filed May 12, 2004 is being treated as the submission under 37 CFR 1.114 for the first filed RCE. A Notice of Improper Request for Continued Examination (RCE) was mailed on April 15, 2004. Accordingly, the RCE submitted on May 12, 2004 is unnecessary and the fee will be credited to petitioner's deposit account no. 06-0916 as authorized.

Telephone inquiries concerning this decision should be directed to the undersigned at (703) 306-5594.

The application file is being forwarded to Technology Center 1700, Art Unit 1734 for processing the Request for Continued Examination under 37 CFR 1.114 filed on April 2, 2004.

Retta Williams

Retta Williams
Petitions Examiner
Office of Petitions
Office of the Deputy Commissioner
for Patent Examination Policy

UNITED STATES PATENT AND TRADEMARK OFFICE

UNDER SECRETARY OF COMMERCE FOR INTELLECTUAL PROPERTY AND
DIRECTOR OF THE UNITED STATES PATENT AND TRADEMARK OFFICE
WASHINGTON, DC 20231
www.uspto.gov

DANIEL J. STANGER
MATTINGLY, STANGER & MALUR, P.C.
1800 DIAGONAL ROAD, SUITE 370
ALEXANDRIA, VIRGINIA 22314

MAILED

AUG 12 2003

DIRECTOR'S OFFICE
TECHNOLOGY CENTER 3600

In re Application of
M. Mori et al
Serial No. 09/506,808
Filed February 18, 2000
For: AUTOMATIC AUCTION METHOD

DECISION ON PETITION
FILED UNDER 37 CFR 1.181

This is a decision on the Petition under 37 CFR 1.181 filed May 8, 2003, which requests withdrawal of the holding of abandonment.

The petition is GRANTED as indicated below.

A review of the file history reveals that the Office issued a final Office action rejection on May 21, 2001. Applicant subsequently filed a Notice of Appeal with a two month extension of time on October 22, 2001. Applicant then filed a timely amendment in response to the final Office action on December 26, 2001.

A Notice of Abandonment was mailed on March 24, 2003 stating that the reply received on December 26, 2001 was not timely. This is incorrect. Both December 24, 2001 and December 25, 2001 were Federal Government holidays making December 26, 2001 the next succeeding day that was not a Saturday, Sunday or Federal holiday. Thus, the reply date of December 26, 2001 was timely.

A further review of the file history shows that a terminal disclaimer was filed on August 21, 2002 and an advisory action was mailed by the Office on February 24, 2003. The terminal disclaimer has not been entered into the file history, and the advisory action did not address the timely filed amendment of December 26, 2001.

The application is being returned to the examiner for consideration of the amendment filed on December 26, 2001 and for consideration of the terminal disclaimer filed on August 21, 2003.

Inquiries related to this decision may be directed to Supervisory Patent Examiner Wynn Coggins at (703) 308-1344.

John J. Love, Director
Patent Technology Center 3600
(703) 308-1020
FAX (703) 306-4597

WC: 07/25/03

UNITED STATES PATENT AND TRADEMARK OFFICE

Commissioner for Patents
United States Patent and Trademark Office
P. O. Box 1450
Alexandria, VA 22313-1450
www.uspto.gov

Paper No. 15

STAAS & HALSEY LLP
SUITE 700
1201 NEW YORK AVENUE NW
WASHINGTON DC 20005

COPY MAILED

AUG 07 2003

OFFICE OF PETITIONS

In re Application of
Masahiro Ichimi
Application No. 09/506,814
Filed: February 18, 2000
Attorney Docket No. 122.1392

DECISION GRANTING PETITION
UNDER 37 CFR 313(c)(2)

This is a decision on the petition, filed August 6, 2003, under 37 CFR 1.313(c)(2) to withdraw the above-identified application from issue after payment of the issue fee.

The petition is **GRANTED**.

The above-identified application is withdrawn from issue for consideration of a submission under 37 CFR 1.114 (request for continued examination). See 37 CFR 1.313(c)(2).

Petitioner is advised that the issue fee paid on July 10, 2003 in the above-identified application cannot be refunded. If, however, the above-identified application is again allowed, petitioner may request that it be applied towards the issue fee required by the new Notice of Allowance.[1]

Telephone inquiries should be directed to the undersigned at (703) 305-8680.

Upon receipt of the file in the Office of Petitions, the file will be forwarded to Technology Center AU 2184 for processing of the request for continued examination under 37 CFR 1.114.

Frances Hicks
Petitions Examiner
Office of Petitions
Office of the Deputy Commissioner
for Patent Examination Policy

---

[1] The request to apply the issue fee to the new Notice may be satisfied by completing and returning the new Issue Fee Transmittal Form PTOL-85(b), which includes the following language thereon: "Commissioner for Patents is requested to apply the Issue Fee and Publication Fee (if any) or re-apply any previously paid issue fee to the application identified above." Petitioner is advised that, whether a fee is indicated as being due or not, the Issue Fee Transmittal Form **must** be completed and timely submitted to avoid abandonment. Note the language in bold text on the first page of the Notice of Allowance and Fee(s) Due (PTOL-85).

UNITED STATES PATENT AND TRADEMARK OFFICE

COMMISSIONER FOR PATENTS
UNITED STATES PATENT AND TRADEMARK OFFICE
P.O. BOX 1450
ALEXANDRIA, VA 22313-1450
WWW.USPTO.GOV

PAPER NO.

STAAS & HALSEY LLP
SUITE 700
1201 NEW YORK AVENUE, N.W.
WASHINGTON DC 20005

COPY MAILED
AUG 07 2003
OFFICE OF PETITIONS

In re Application of
Masahiro Ichimi
Application No. 09/506,814
Filed: February 18, 2000
Attorney Docket No. 122.1392

ON PETITION

This is a decision on the petition under 37 CFR 1.313(c)(2), filed August 6, 2003, to withdraw the above-identified application from issue after payment of the issue fee.

The petition is **GRANTED**.

The above-identified application is withdrawn from issue for consideration of a submission under 37 CFR 1.114 (request for continued examination). See 37 CFR 1.313(c)(2).

Petitioner is advised that the issue fee paid on July 10, 2003, in the above-identified application cannot be refunded. If, however, the above-identified application is again allowed, petitioner may request that it be applied towards the issue fee required by the new Notice of Allowance. [1]

After the application is received in the Office of Petition, the file will be forwarded to Technology Center AU 2184 for further processing of the request for continued examination under 37 CFR 1.114.

Sherry D. Brinkley
Petitions Examiner
Office of Petitions
Office of the Deputy Commissioner
for Patent Examination Policy
(703) 305-9220

[1]The request to apply the issue fee to the new Notice may be satisfied by completing and returning the new Issue Fee Transmittal Form PTOL-85(b), which includes the following language thereon: "Commissioner for Patents is requested to apply the Issue Fee and Publication Fee (if any) or re-apply any previously paid issue fee to the application identified above." Petitioner is advised that, whether a fee is indicated as being due or not, the Issue Fee Transmittal Form **must** be completed and timely submitted to avoid abandonment. Note the language in bold text on the first page of the Notice of Allowance and Fee(s) Due (PTOL-85).

SPE RESPONSE FOR CERTIFICATE OF CORRECTION

Paper No.: _____

DATE : Sep. 15, 2005

TO SPE OF : ART UNIT 2113 (*Yolanda Wilson*)

SUBJECT : Request for Certificate of Correction on Patent No.: 6,865,687

A response is requested with respect to the accompanying request for a certificate of correction.

Please complete this form and return with file, within 7 days to:
Palm location 7580, Certificates of Correction Branch – South Tower – 9A22
If response is for an IFW, **return to employee (named below) via PUBSCofC Team in MADRAS.**
With respect to the change(s) requested, correcting Office and/or Applicant's errors, should the patent read as shown in the certificate of correction (COCIN)? No new matter should be introduced, nor should the scope or meaning of the claims be changed.
Please see the IFW code cocin – re: Item (56) – Foreign Patent Documents.

Thank You For Your Assistance

sp
Certificates of Correction Branch
Tel. No. 703-308-9390 x120

The request for issuing the above-identified correction(s) is hereby:
Note your decision on the appropriate box.

- ☒ **Approved** — All changes apply.
- ☐ **Approved in Part** — Specify below which changes **do not** apply.
- ☐ **Denied** — State the reasons for denial below.

Comments:

_____

_____

_____

_____

_____

Robert H. Bernstein
SPE

2113
Art Unit

UNITED STATES
PATENT AND
TRADEMARK OFFICE

UNDER SECRETARY OF COMMERCE FOR INTELLECTUAL PROPERTY
AND DIRECTOR OF THE UNITED STATES PATENT AND TRADEMARK OFFICE
WASHINGTON, D.C. 20231
WWW.USPTO.GOV

APR 2 2002

#6

SHANKS & HERBERT
TRANSPOTOMAC PLAZA
1033 N FAIRFAX STREET
SUITE 306
ALEXANDRIA, VA 22314

In re Application of
Michele A. McTigue et al.
Serial No.:09/506,906
Filed: February 18, 2000
Attorney Docket No.: 0125-0016C

:WITHDRAWAL OF ABANDONMENT

This is in response to applicant's petition, filed December 21, 2001 under 37 CFR 1.181, to withdraw the abandonment of the above identified application based on non-receipt of an Office action and to restore the application to a pending status.

A review of the file history shows that the Office mailed a Notice to File Missing Parts, setting a three month shortened statutory period for reply, to applicant on May 12, 2000. On October 29, 2001 the Office mailed a Notice of Abandonment indicating that no response had been received. Applicant states that the Notice to File Missing Parts of May 12, 2000 was never received and provides as evidence thereof copies of the attorney docket records where the Notice would have been entered if received, showing non-receipt of the Notice. Based on the evidence presented it is concluded that applicant never received the Notice. In view thereof, the Notice of Abandonment mailed October 29, 2001, is vacated and the application is restored to pending status with the mailing of this decision.

The Request to Withdraw Abandonment under 37 CFR 1.181 is **GRANTED**.

The application will be forwarded to the Office of Initial Patent Examination for prompt mailing of a new Notice to File Missing Parts.

Should there be any questions with regard to this letter please contact Bruce Campell by letter addressed to the Director, Technology Center 1600, Washington, DC 20231, or by telephone at (703) 308-4205 or by facsimile transmission at (703) 746-5006.

Bruce Kisliuk
Director, Technology Center 1600

SPE RESPONSE FOR CERTIFICATE OF CORRECTION

Paper No.: _____

DATE : January 17, 2006

TO SPE OF : ART UNIT 1625

SUBJECT : Request for Certificate of Correction on Patent No.: 6,969731/ Ser.no. 09/506,988 No.09/818,626

A response is requested with respect to the accompanying request for a certificate of correction.

Please complete this form and return with file, within **7** days to:
Palm location **7580, Certificates of Correction Branch – South Tower – 9A22**
If response is for an IFW, **return to employee (named below) via PUBSCofC Team in MADRAS.**
With respect to the change(s) requested, correcting Office and/or Applicant's errors, should the patent read as shown in the certificate of correction (COCIN)? No new matter should be introduced, nor should the scope or meaning of the claims be changed.

Magdalene Talley

Thank You For Your Assistance

Certificates of Correction Branch
Tel. No. 703-308-9309 ext. 116

The request for issuing the above-identified correction(s) is hereby:
Note your decision on the appropriate box.

- [x] **Approved** — **All** changes apply.
- [ ] **Approved in Part** — Specify below which changes **do not** apply.
- [ ] **Denied** — State the reasons for denial below.

Comments:

D. MARGARET SEAMAN
PRIMARY EXAMINER

1625

SPE **Art Unit**

UNITED STATES PATENT AND TRADEMARK OFFICE

Commissioner for Patents
United States Patent and Trademark Office
P.O. Box 1450
Alexandria, VA 22313-1450
www.uspto.gov

TEXAS INSTRUMENTS
INCORPORATED
P O BOX 655474, M/S 3999
DALLAS TX 75265

COPY MAILED

DEC 1 1 2009

OFFICE OF PETITIONS

In re Application of
Dabak, et al.
Application No. 09/507,134
Filed: 18 February, 2000
Attorney Docket No. TI-30345

DECISION

This is a decision on the petition filed on 31 August, 2009, pursuant to 37 C.F.R. §1.137(b) for revival of an application abandoned due to unintentional delay .

The petition under 37 C.F.R. §1.137(b) is **GRANTED**.

As to the Allegations
of Unintentional Delay

The requirements of a grantable petition pursuant to 37 C.F.R. §1.137(b) are the petition and fee therefor, a reply, a proper statement of unintentional delay under the regulation, and, where applicable, a terminal disclaimer and fee. (However, it does not appear that a terminal disclaimer and fee are due here.)

Petitioners' attentions always are directed to the guidance in the Commentary at MPEP §711.03(c)(II).

BACKGROUND

The record reflects as follows:

Petitioner failed to reply timely and properly to the non-final Office action mailed on 26 January, 2009 (the Notice of Abandonment erroneously lists the date as 26 January, 2008), with reply due absent an extension of time on or before 26 April, 2009.

The application went abandoned by operation of law after midnight 26 April, 2009.

The Office mailed the Notice of Abandonment on 19 August, 2009.

On 31 August, 2009, Petitioner filed, *inter alia*, a petition (with fee) pursuant to 37 C.F.R. §1.137(b), with a reply in the form of an amendment and made the statement of unintentional delay.

The availability of applications and application papers online to applicants/practitioners who diligently associate their Customer Number with the respective application(s) now provides an applicant/practitioner on-demand information as to events/transactions in an application.

Out of an abundance of caution, Petitioners always are reminded that those registered to practice and all others who make representations before the Office **must** inquire into the underlying facts of representations made to the Office and support averments with the appropriate documentation–since all owe to the Office the continuing duty to disclose.[1]

STATUTES, REGULATIONS AND ANALYSIS

Congress has authorized the Commissioner to "revive an application if the delay is shown to the satisfaction of the Commissioner to have been "unavoidable." 35 U.S.C. §133 (1994).[2]
The regulations at 37 C.F.R. §1.137(a) and (b) set forth the requirements for a Petitioner to revive a previously unavoidably or unintentionally, respectively, abandoned application under this congressional grant of authority.

Unintentional delays are those that do not satisfy the very strict statutory and regulatory requirements of unavoidable delay, and also, by definition, are not intentional.[3]))

As to Allegations of Unintentional Delay

The requirements of a grantable petition pursuant to 37 C.F.R. §1.137(b) are the petition and fee therefor, a reply, a proper statement of unintentional delay under the regulation, and, where applicable, a terminal disclaimer and fee.

It appears that the requirements under the rule have been satisfied.

---

[1] See supplement of 17 June, 1999. The Patent and Trademark Office is relying on petitioner's duty of candor and good faith and accepting a statement made by Petitioner. See Changes to Patent Practice and Procedure, 62 Fed. Reg. at 53160 and 53178, 1203 Off. Gaz. Pat. Office at 88 and 103 (responses to comments 64 and 109)(applicant obligated under 37 C.F.R. §10.18 to inquire into the underlying facts and circumstances when providing statements to the Patent and Trademark Office).

[2] 35 U.S.C. §133 provides:

35 U.S.C. §133 Time for prosecuting application.
Upon failure of the applicant to prosecute the application within six months after any action therein, of which notice has been given or mailed to the applicant, or within such shorter time, not less than thirty days, as fixed by the Commissioner in such action, the application shall be regarded as abandoned by the parties thereto, unless it be shown to the satisfaction of the Commissioner that such delay was unavoidable.

[3] Therefore, by example, an unintentional delay in the reply might occur if the reply and transmittal form are to be prepared for shipment by the US Postal Service, but other pressing matters distract one's attention and the mail is not timely deposited for shipment.

CONCLUSION

Accordingly, the petition under 37 C.F.R. §1.137(b) is **granted**.

The instant application is released to the Technology Center/AU 2611 for further processing in due course.

Petitioner may find it beneficial to view Private PAIR within a fortnight of the instant decision to ensure that the revival has been acknowledged by the TC/AU in response to this decision. It is noted that all inquiries with regard to that change in status need be directed to the TC/AU where that change of status must be effected—that does not occur in the Office of Petitions.

Telephone inquiries regarding this decision may be directed to the undersigned at (571) 272-3214—it is noted, however, that all practice before the Office is in writing (see: 37 C.F.R. §1.2[4]) and the proper authority for action on any matter in this regard are the statutes (35 U.S.C.), regulations (37 C.F.R.) and the commentary on policy (MPEP). Therefore, no telephone discussion may be controlling or considered authority for Petitioner's action(s).

/John J. Gillon, Jr./
John J. Gillon, Jr.
Senior Attorney
Office of Petitions

[4] The regulations at 37 C.F.R. §1.2 provide:
§1.2 Business to be transacted in writing.
All business with the Patent and Trademark Office should be transacted in writing. The personal attendance of applicants or their attorneys or agents at the Patent and Trademark Office is unnecessary. The action of the Patent and Trademark Office will be based exclusively on the written record in the Office. No attention will be paid to any alleged oral promise, stipulation, or understanding in relation to which there is disagreement or doubt.

UNITED STATES
PATENT AND
TRADEMARK OFFICE

UNDER SECRETARY OF COMMERCE FOR INTELLECTUAL PROPERTY
AND DIRECTOR OF THE UNITED STATES PATENT AND TRADEMARK OFFICE
PO BOX 1450 ALEXANDRIA VA 22313-450
WWW.USPTO.GOV

JUN 11 2003

MARIA A. TREVISIAN
WOLF, GREENFIELD & SACKS, P.C.
600 ATLANTIC AVENUE
BOSTON, MA 02210-2211

In re Application of	:
Newman et al.	:
Serial No.: 09/507,146	: WITHDRAWAL OF ABANDONMENT
Filed: February 18, 2000	:
Attorney Docket No. L00559/ 70001(ERP)	:

This is in response to applicants' petition under 37 CFR 1.181, filed August 29, 2002, to withdraw the abandonment of the above identified application based on timely filing of a reply. The delay in acting on this petition is regretted.

A review of the file history shows that the examiner mailed an Office action to applicants on November 7, 2001, setting a three month shortened statutory period for reply. Applicants replied on February 5, 2002 (Certificate of facsimile transmission date), by filing an amendment. The amendment was received by the Office but never correlated with the file. The Office mailed a Notice of Abandonment to applicants on July 24, 2002, for failure to reply to the Office action. Applicants timely mailed their petition for withdrawal of abandonment on August 29, 2002, as evidenced by the Certificate of facsimile transmission.. In view of applicants' timely reply, the Notice of Abandonment was mailed in error and is hereby withdrawn and the application restored to pending status with the mailing of this decision.

Applicants' petition is **GRANTED**.

The amendment and reply submitted February 5, 2002, will be entered and the case will be forwarded to the Examiner for further consideration.

Should there be any questions with respect to this decision, please contact William R. Dixon, Jr., by mail addressed to: Director, Technology Center 1600, PO Box 1450, Alexandria VA 22313-1450, or by telephone at (703)308-0254 or by facsimile transmission at (703) 308-7230.

Jasemine C. Chambers
Director, Technology Center 1600

UNITED STATES PATENT AND TRADEMARK OFFICE

Commissioner for Patents
United States Patent and Trademark Office
Washington, D.C. 20231
www.uspto.gov

Paper No. 10

APPLIED MATERIALS INC
PATENT COUNSEL
PO BOX 450A
SANTA CLARA CA 95052

COPY MAILED

MAR 1 8 2002

OFFICE OF PETITIONS

In re Application of :
Tolles, et al. :
Application No. 09/507,172 :
Filed: February 18, 2000 :
Attorney Docket No. 3600.0881-D5 :

DECISION ON PETITION

This is a decision on the petition filed on January 22, 2002 (Certificate of Mailing dated December 11, 2001), pursuant to 37 CFR 1.137(b), to revive the above-identified application.

The petition is **GRANTED**.

The above-identified application became abandoned for failure to timely file a response to the non-final Office action, mailed May 22, 2001, which set a shortened statutory period for reply of one (1) month. No extensions of time for reply under the provisions of 37 CFR 1.136(a) were obtained. No response having been received, the above-identified application became abandoned on June 23, 2001. The instant petition precedes the mailing of a Notice of Abandonment.

The petitioner has met the requirements to revive the above-identified application, pursuant to 37 CFR 1.137(b). Petitioner submitted the required reply in the form of a Response to Restriction Requirement, paid the petition fee, and made a statement of unintentional delay. 37 CFR 1.137(b)(3) requires a statement that the entire delay in filing the required reply from the due date for the reply until the filing of a grantable petition pursuant to 37 CFR 1.137(b) was unintentional. The statement contained in the instant petition varies from the language required by 37 CFR 1.137(b)(3). The statement contained in the instant petition is being construed as the statement required by 37 CFR 1.137(b)(3). Petitioner must notify the Office if this is **not** a correct interpretation of the statement contained in the instant petition.

The application file is being forwarded to Technology Center 3700 for consideration of petitioner's Response to Restriction Requirement, filed January 22, 2002.

Telephone inquiries regarding this decision should be directed to the undersigned at (703) 305-0272.

Cliff Congo
Petitions Attorney
Office of Petitions
Office of the Deputy Commissioner
for Patent Examination Policy

UNITED STATES PATENT AND TRADEMARK OFFICE

Commissioner for Patents
United States Patent and Trademark Office
P.O. Box 1450
Alexandria, VA 22313-1450
www.uspto.gov

Paper No.

FISH & RICHARDSON P.C.
P.O. BOX 1022
MINNEAPOLIS, MN 55440-1022

COPY MAILED

JUN 0 8 2006

OFFICE OF PETITIONS

In re Application of	:	
Tolles et al.	:	
Application No. 09/507,172	:	LETTER REGARDING
Filed: February 18, 2000	:	PATENT TERM ADJUSTMENT
Atty Docket No. 3600.0881-D5	:	

This letter is in response to the "LETTER REGARDING PATENT TERM ADJUSTMENT AT ALLOWANCE PURSUANT TO COMMENT 43 OF THE FINAL RULE" filed December 15, 2005. Applicants disclose that the application is not entitled to patent term extension as shown on the Determination mailed February 7, 2005, but by virtue of the filing of a continued prosecution application (CPA) on February 25, 2003 is entitled to patent term adjustment.

The request for correction of the initial determination of patent term adjustment (PTA) is ***granted to the extent indicated herein.*** The determination of PTA at the time of the mailing of the notice of allowance is ZERO (0) days (including 63 days of Office delay and 63 days of applicant delay).

The Office has updated the PAIR screen to reflect that the correct Patent Term Adjustment determination at the time of the mailing of the Notice of Allowance is ZERO (0) days. A copy of the updated PAIR screen, showing the correct determination, is enclosed.

A review of the prosecution history of this case reveals that a CPA was filed on February 25, 2003. However, the paper was not entered into the record as a CPA. This error has been corrected.

Further, applicants are correct that this application became eligible for patent term adjustment for examination delay by virtue of the filing of the CPA. Entries of periods of adjustment of 63 days and of periods of reduction of 63 days as of the mailing of the notice of allowance have been entered in the record. Specifically, 63 days was entered for Office delay in taking in excess of four months to mail a Notice of Allowance mailed February 7, 2005, in response to the Request for Continued Examination (RCE) filed August 6, 2004. See 37 CFR §§ 1.702(a)(2) and 1.703(a)(3). Periods of reduction of 2 days each were entered for Applicant delay in taking in excess of three months to file proper responses (RCEs filed August 6, 2004 and May 9, 2005) to the Notice of Allowances mailed May 4, 2004 and February 7, 2005 respectively. See 37 CFR § 1.704(b). In addition, a period of reduction of 59 days was entered for applicant filing on April 1, 2004 a supplemental response, not requested by the examiner. See 37 CFR § 1.704(c)(8).

In view thereof, the correct determination of PTA at the time of the mailing of the notice of allowance is ZERO (0) days (including 63 days of Office delay and 63 days of Applicant delay).

Given the correction in the record as to eligibility, at the time of issuance of the patent, the PTA calculations should be processed as normal and the patent should issue with a revised patent term adjustment based on any periods of adjustment or reduction after the mailing of the Notice of Allowance mailed September 21, 2005.

The Office of Patent Publication has been advised of this decision. The application is, thereby, forwarded to the Office of Patent Publication for issuance of the application.

Telephone inquiries specific to this matter should be directed to the undersigned at (571) 272-3219.

Nancy Johnson

Nancy Johnson
Senior Petitions Attorney
Office of Petitions

Enclosure: Copy of adjusted PAIR calculation

Day : Wednesday

PALM INTRANET

Date: 6/7/2006
Time: 18:08:39

PTA Calculations for Application: 09/507172			
Application Filing Date:	02/18/2000	PTO Delay (PTO):	0
Issue Date of Patent:		Three Years:	0
Pre-Issue Petitions:	0	Applicant Delay (APPL):	0
Post-Issue Petitions:	0	Total PTA (days):	0
PTO Delay Adjustment:	0		

File Contents History

Number	Date	Contents Description	PTO	APPL	START
125	06/05/2006	ADJUSTMENT OF PTA CALCULATION BY PTO		59	
124	06/05/2006	ADJUSTMENT OF PTA CALCULATION BY PTO		2	
123	06/05/2006	ADJUSTMENT OF PTA CALCULATION BY PTO	63		
122	06/05/2006	ADJUSTMENT OF PTA CALCULATION BY PTO		2	
105	09/21/2005	MAIL NOTICE OF ALLOWANCE			
104	09/21/2005	MAIL EXAMINER'S AMENDMENT			
103	09/19/2005	ISSUE REVISION COMPLETED			
102	09/19/2005	EXAMINER'S AMENDMENT COMMUNICATION			
101	09/19/2005	NOTICE OF ALLOWANCE DATA VERIFICATION COMPLETED			
100	09/19/2005	NOTICE OF ALLOWABILITY			
99	09/09/2005	DATE FORWARDED TO EXAMINER			
98	09/06/2005	RESPONSE AFTER NON-FINAL ACTION			
97	06/06/2005	MAIL NON-FINAL REJECTION			
96	06/01/2005	NON-FINAL REJECTION			
95	06/01/2005	DATE FORWARDED TO EXAMINER			
94	05/09/2005	REQUEST FOR CONTINUED EXAMINATION (RCE)			
93	06/01/2005	DISPOSAL FOR A RCE/CPA/129 (EXPRESS ABANDONMENT IF CPA)			
92	05/09/2005	WORKFLOW - REQUEST FOR RCE - BEGIN			
91	03/09/2005	CORRESPONDENCE ADDRESS CHANGE			
90	03/09/2005	CHANGE IN POWER OF ATTORNEY (MAY INCLUDE ASSOCIATE POA)			
89	02/14/2005	EXPORT TO INITIAL DATA CAPTURE			
88	02/17/2005	RECEIPT INTO PUBS			
87	02/07/2005	MAIL NOTICE OF ALLOWANCE			

86	02/07/2005	MAIL EXAMINER'S AMENDMENT			
85	02/04/2005	EXAMINER'S AMENDMENT COMMUNICATION			
84	02/04/2005	ISSUE REVISION COMPLETED			
83	02/04/2005	NOTICE OF ALLOWANCE DATA VERIFICATION COMPLETED			
82	02/04/2005	NOTICE OF ALLOWABILITY			
81	08/06/2004	INFORMATION DISCLOSURE STATEMENT (IDS) FILED			
80	01/19/2005	DATE FORWARDED TO EXAMINER			
79	08/06/2004	REQUEST FOR CONTINUED EXAMINATION (RCE)			
78	01/19/2005	DISPOSAL FOR A RCE/CPA/129 (EXPRESS ABANDONMENT IF CPA)			
76	08/06/2004	WORKFLOW - REQUEST FOR RCE - FINISH			
75	08/06/2004	WORKFLOW INCOMING AMENDMENT IFW			
74	08/06/2004	WORKFLOW - REQUEST FOR RCE - BEGIN			
73	08/04/2004	RECEIPT INTO PUBS			
72	06/11/2004	RECEIPT INTO PUBS			
71	06/11/2004	RECEIPT INTO PUBS			
70	05/27/2004	WORKFLOW - FILE SENT TO CONTRACTOR			
69	05/27/2004	WORKFLOW - FILE SENT TO CONTRACTOR			
68	05/26/2004	WORKFLOW - FILE SENT TO CONTRACTOR			
67	05/04/2004	MAIL NOTICE OF ALLOWANCE			
66	05/04/2004	MAIL FORMAL DRAWINGS REQUIRED			
65	05/04/2004	MAIL OATH OF DECLARATION REQUIRED			
64	05/03/2004	ISSUE REVISION COMPLETED			
63	05/03/2004	OATH OR DECLARATION REQUIRED			
62	05/03/2004	FORMAL DRAWINGS REQUIRED			
61	05/03/2004	NOTICE OF ALLOWANCE DATA VERIFICATION COMPLETED			
60	05/03/2004	NOTICE OF ALLOWABILITY			
59	04/20/2004	IFW TSS PROCESSING BY TECH CENTER COMPLETE			
58	04/20/2004	DATE FORWARDED TO EXAMINER			
57	04/01/2004	RESPONSE AFTER NON-FINAL ACTION			
56	05/27/2003	REFERENCE CAPTURE ON IDS			
55	04/20/2000	REFERENCE CAPTURE ON IDS			
54	03/03/2004	MAIL NOTICE OF INFORMAL OR NON-RESPONSIVE AMENDMENT			

53	03/03/2004	DATE FORWARDED TO EXAMINER			
52.1	02/02/2004	INFORMAL OR NON-RESPONSIVE AMENDMENT AFTER EXAMINER ACTION			
52	02/02/2004	RESPONSE AFTER NON-FINAL ACTION			
51	11/07/2003	MAIL NON-FINAL REJECTION			
50	11/07/2003	NON-FINAL REJECTION			
49	10/27/2003	CASE DOCKETED TO EXAMINER IN GAU			
46	10/09/2003	DATE FORWARDED TO EXAMINER			
45	10/09/2003	REQUEST FOR CONTINUED EXAMINATION (RCE)			
44	10/09/2003	DISPOSAL FOR A RCE/CPA/129 (EXPRESS ABANDONMENT IF CPA)			
43	10/09/2003	CASE DOCKETED TO EXAMINER IN GAU			
42	10/07/2003	PETITION TO REVIVE APPLICATION - GRANTED			
41	02/25/2003	PETITION ENTERED			
40	06/18/2003	MAIL MISCELLANEOUS COMMUNICATION TO APPLICANT			
39	06/17/2003	MISCELLANEOUS COMMUNICATION TO APPLICANT - NO ACTION COUNT			
38	05/27/2003	INFORMATION DISCLOSURE STATEMENT (IDS) FILED			
37	02/25/2003	WORKFLOW - REQUEST FOR CPA - BEGIN			
36	02/05/2003	MAIL ABANDONMENT FOR FAILURE TO CORRECT DRAWINGS/OATH			
35	02/05/2003	ABANDONMENT FOR FAILURE TO CORRECT DRAWINGS/OATH/NONPUB REQUEST			
34	01/07/2003	RECEIPT INTO PUBS			
33	12/17/2002	WORKFLOW - FILE SENT TO CONTRACTOR			
32	12/16/2002	RECEIPT INTO PUBS			
31	12/16/2002	DISPATCH TO PUBLICATIONS			
30	12/03/2002	MAIL NOTICE OF ALLOWANCE			
29	12/03/2002	MAIL FORMAL DRAWINGS REQUIRED			
28	12/03/2002	MAIL OATH OF DECLARATION REQUIRED			
27	12/02/2002	OATH OR DECLARATION REQUIRED			
26	12/02/2002	FORMAL DRAWINGS REQUIRED			
25	12/02/2002	NOTICE OF ALLOWANCE DATA VERIFICATION COMPLETED			
24	12/02/2002	CASE DOCKETED TO EXAMINER IN GAU			
23	12/02/2002	NOTICE OF ALLOWABILITY			

22	10/25/2002	DATE FORWARDED TO EXAMINER			
21	09/23/2002	RESPONSE AFTER NON-FINAL ACTION			
20	09/23/2002	REQUEST FOR EXTENSION OF TIME - GRANTED			
19	05/09/2002	MAIL NON-FINAL REJECTION			
18	05/06/2002	NON-FINAL REJECTION			
17	05/06/2002	DATE FORWARDED TO EXAMINER			
16	01/22/2002	RESPONSE TO ELECTION / RESTRICTION FILED			
15	03/26/2002	CASE DOCKETED TO EXAMINER IN GAU			
14	03/18/2002	PETITION TO REVIVE APPLICATION - GRANTED			
13	01/22/2002	PETITION ENTERED			
12	05/22/2001	MAIL RESTRICTION REQUIREMENT			
11	05/21/2001	REQUIREMENT FOR RESTRICTION / ELECTION			
10	04/02/2001	CASE DOCKETED TO EXAMINER IN GAU			
9	02/15/2001	PRELIMINARY AMENDMENT			
8	09/05/2000	MISCELLANEOUS INCOMING LETTER			
7	04/20/2000	INFORMATION DISCLOSURE STATEMENT (IDS) FILED			
6	11/14/2000	CASE DOCKETED TO EXAMINER IN GAU			
5	09/12/2000	APPLICATION IS NOW COMPLETE			
4	05/03/2000	NOTICE MAILED--APPLICATION INCOMPLETE--FILING DATE ASSIGNED			
3	05/03/2000	CORRESPONDENCE ADDRESS CHANGE			
2	03/14/2000	IFW SCAN & PACR AUTO SECURITY REVIEW			
1	02/18/2000	INITIAL EXAM TEAM NN			

Search Another: Application# Search

EXPLANATION OF PTA CALCULATION

EXPLANATION OF PTE CALCULATION

To go back use Back button on your browser toolbar.

Back to PALM | ASSIGNMENT | OASIS | Home page

UNITED STATES PATENT AND TRADEMARK OFFICE

Commissioner for Patents
United States Patent and Trademark Office
P.O. Box 1450
Alexandria, VA 22313-1450
www.uspto.gov

Paper No.

TEXAS INSTRUMENTS INCORPORATED
P O BOX 655474, M/S 3999
DALLAS, TX 75265

COPY MAILED

JUN 0 5 2006

OFFICE OF PETITIONS

In re Application of	:	
Karlsson et al.	:	
Application No. 09/507,249	:	DECISION ON PETITION
Filed: February 18, 2000	:	
Attorney Docket No. TI-29870	:	

This is in response to the SECOND PETITION TO WITHDRAW HOLDING OF ABANDONMENT filed March 27, 2006. This petition was recently forwarded to the undersigned for consideration.

The above-identified application became abandoned for failure to file a reply to the Notice of Non-compliant Amendment (37 CFR 1.121) mailed February 5, 2004. This Notice set a TIME PERIOD of ONE MONTH from the mailing date of the notice to supply the corrected section of the non-compliant amendment in compliance with 37 CFR 1.121. No reply having been received, the application became abandoned on March 6, 2005. The instant petition precedes the mailing of a courtesy Notice of Abandonment.

On instant petition, applicants assert that a response, made timely by a certificate of mailing, was mailed on February 24, 2004. Applicants acknowledge that the incorrect application number was inadvertently noted on the response. In support thereof, applicants include a copy of the response as originally filed.

37 CFR § 1.8(b) provides that:

In the event that correspondence is considered timely filed by being mailed or transmitted in accordance with paragraph (a) of

this section, but not received in the U.S. Patent and Trademark Office after a reasonable amount of time has elapsed from the time of mailing or transmitting of the correspondence, or after the application is held to be abandoned, or after the proceeding is dismissed, terminated, or decided with prejudice, the correspondence will be considered timely if the party who forwarded such correspondence:

> (1) Informs the Office of the previous mailing or transmission of the correspondence promptly after becoming aware that the Office has no evidence of receipt of the correspondence;
> (2) Supplies an additional copy of the previously mailed or transmitted correspondence and certificate; and
> (3) Includes a statement which attests on a personal knowledge basis or to the satisfaction of the Director to the previous timely mailing or transmission. If the correspondence was sent by facsimile transmission, a copy of the sending unit's report confirming transmission may be used to support this statement.

The evidence shows that the petition was originally filed with a certificate of mailing dated January 28, 2005. The evidence supports a conclusion that this was prompt within the meaning of § 1.8(b)(1). Further, the petition included a copy of the previously mailed correspondence with a certificate of mailing dated February 24, 2004, and a satisfactory statement of the original filing.

In view thereof, any holding of abandonment based on the failure to timely receive a response to the Office action mailed February 5, 2004 is hereby **WITHDRAWN**.

The petition under § 1.181 is **GRANTED**.

No fee is required on petition under § 1.181.

Technology Center AU 2616 has been advised of this decision. The application file is, thereby, forwarded to the Technology Center's technical staff for noting that the response to the Notice of Non-Compliant Amendment mailed February 5, 2004, was responded to by applicant with a response mailed with a certificate of mailing dated February 24, 2004, and for the examiner to consider the response resubmitted on petition filed

March 27, 2006 (showing a certificate of mailing dated February 24, 2004).

Telephone inquiries related to this decision should be directed to the undersigned at (571) 272-3219.

Nancy Johnson
Senior Petitions Attorney
Office of Petitions

UNITED STATES PATENT AND TRADEMARK OFFICE

COMMISSIONER FOR PATENTS
UNITED STATES PATENT AND TRADEMARK OFFICE
P.O. BOX 1450
ALEXANDRIA, VA 22313-1450
www.uspto.gov

Joseph L. Johnson, Esq.
Lathrop & Gage, L.C.
1845 S. National Ave.
Springfield, MO 65804

COPY MAILED

APR 29 2005

OFFICE OF PETITIONS

In re Application of :
Mitch Chance :
Application No. 09/507,379 : ON PETITION
Filed: February 18, 2000 :
Attorney Docket No. 370778 :

This is a decision on the petition under 37 CFR 1.137(b), filed March 10, 2005, to revive the above-identified application.

The petition is **GRANTED**.

An Ex Parte Quayle Office action was mailed to applicant on May 18, 2004, which set a two (2) month shortened statutory period for reply. As no reply was received and no extensions of time under the provisions of 37 CFR 1.136 were obtained, the application became abandoned on July 19, 2004.

Since the application became abandoned, applicant filed the instant petition and a proposed reply, namely, corrected drawings. Receipt of the drawings is acknowledged.

Telephone inquiries concerning this decision should be directed to the undersigned at (571) 272-3223.

The application file is being referred to Technology Center 3600.

Marianne E. Jenkins
Petitions Examiner
Office of Petitions
Office of the Deputy Commissioner
for Patent Examination Policy

UNITED STATES PATENT AND TRADEMARK OFFICE

COMMISSIONER FOR PATENTS
UNITED STATES PATENT AND TRADEMARK OFFICE
P.O. BOX 1450
ALEXANDRIA, VA 22313-1450
www.uspto.gov

OCT 20 2003

Paper No. 15

In re Application of
Bernd Schulze
Application No. 09/507,453
Filed: February 22, 2000
Attorney Docket No. RUM213R1

: DECISION ON PETITION

This is a decision on the petition filed by facsimile transmission on September 6, 2003 by which petitioner requests withdrawal of the holding that this application stands abandoned for failure to timely file the issue fee. The petition is being treated pursuant to 37 CFR 1.181, and no fee is required.

The petition is dismissed..

Petitioner alleges that the issue fee was in fact timely paid. Petitioner supports this allegation by furnishing a copy of a transmittal letter for a supplemental declaration and the authorization of payment of the issue fee. The fee authorization has affixed thereto a 37 CFR 1.8(a) certificate of mailing dated April 30, 2003. Petitioner has also furnished a copy of a post card receipt for the transmittal letter which shows that it was received in the Office on April 30, 2003.

However, petitioner's fee authorization was without effect. The fee authorization authorizes the Office to charge Deposit Account No. 11-0224 "any fees under 35 U.S.C. 1.16, and 1.17, after a mailing of a Notice of Allowance under 35 USC 1.18, or any additional fees which may be required during the entire pendency of this application ..." However, there are no fees that are due under any of 35 U.S.C. § 1.6, 35 U.S.C. § 17 or 35 U.S.C. § 1.8 because there are, in fact, no such sections of Title 35 of the United States Code.. The issue fee is authorized by 35 U.S.C. § 151 and the amount of this fee is in fact set by 37 CFR 1.18. Moreover, the fee authorization affixed to the transmittal letter does not specifically authorize the Office to charge the issue fee, but instead merely authorizes the Office to charge nonexistent fees in accordance with nonexistent Sections of Title 35 of the United States Code.

Because there is no evidence that the issue fee was timely paid, and because the evidence submitted by petitioner does not show that petitioner ever authorized the Office to charge the issue fee or to charge any fees under 37 CFR 1.18, there is no basis for withdrawing the holding of abandonment.

Petitioner is entitled to file a renewed petition, without fee, introducing any additional evidence that would establish the timely payment of the issue fee. The renewed petition must be filed within two months of the date of this Decision. 37 CFR 1.181(f). This application is being retained in Technology Center 3700 pending the filing of a renewed petition, or other appropriate action by petitioner.

PETITION DISMISSED.

E. Rollins-Cross, Director, Patent
Examining Groups 3710 and 3720

Horst M. Kasper
13 Forest Drive
Warren, NJ 07059

UNITED STATES PATENT AND TRADEMARK OFFICE

COMMISSIONER FOR PATENTS
UNITED STATES PATENT AND TRADEMARK OFFICE
P.O. BOX 1450
ALEXANDRIA, VA 22313-1450
www.uspto.gov

JAN 20 2004

Paper No. 17

In re Application of
Bernd Schulze
Application No. 09/507,453
Filed: February 22, 2000
Attorney Docket No. RUM213R1

: DECISION ON PETITION

This is a decision on the renewed petition filed on November 17, 2003 by which petitioner requests withdrawal of the holding that this application stands abandoned for failure to timely file the issue fee. The petition is being treated pursuant to 37 CFR 1.181, and no fee is required.

The renewed petition is granted..

In the original petition, petitioner alleged that the issue fee was in fact timely paid. Petitioner supported this allegation by furnishing a copy of a transmittal letter for a supplemental declaration and the authorization of payment of the issue fee. The fee authorization has affixed thereto a 37 CFR 1.8(a) certificate of mailing dated April 30, 2003. Petitioner has also furnished a copy of a post card receipt for the transmittal letter which shows that it was received in the Office on April 30, 2003.

It was originally held that petitioner's fee authorization was without effect because the fee authorization authorized the Office to charge Deposit Account No. 11-0224 "any fees under 35 U.S.C. 1.16, and 1.17, after a mailing of a Notice of Allowance under 35 USC 1.18, or any additional fees which may be required during the entire pendency of this application ..." and there are no fees that are due under any of 35 U.S.C. § 1.16, 35 U.S.C. § 1.17 or 35 U.S.C. § 1.18 The issue fee is authorized by 35 U.S.C. § 151 and the amount of this fee is in fact set by 37 CFR 1.18. Also, the fee authorization affixed to the transmittal letter did not specifically authorize the Office to charge the issue fee, but instead merely authorized the Office to charge nonexistent fees in accordance with nonexistent Sections of Title 35 of the United States Code.

Upon reconsideration, it is deemed that the Office could have understood the fee authorization to authorize charging the issue fee under 37 CFR 1.18 to Deposit Account No. 11-0224. In view of the evidence showing that receipt of this authorization, it is clear that this application is not abandoned.

Accordingly, the Notice of Abandonment is hereby vacated, the holding of abandonment is withdrawn, and the application is restored to pending status. The application is being forwarded to the Office of Patent Publications with instructions to charge the issue fee to the above listed Deposit Account.

PETITION GRANTED.

E. Rollins-Cross, Director, Patent
Examining Groups 3710 and 3720

Horst M. Kasper
13 Forest Drive
Warren, NJ 07059

UNITED STATES DEPARTMENT OF COMMERCE
Patent and Trademark Office
ASSISTANT SECRETARY AND COMMISSIONER OF
PATENTS AND TRADEMARKS
W ashington, D.C. 20231

MAILED: NOV 1 7 2000

PAPER NO.: 4

In re Application of Alex E.S. Green Serial No.: 09/507,574 Filed: February 18, 2000 For: PROCESS AND DEVICE FOR PYROLYSIS OF FEEDSTOCK	DECISION ON PETITION TO MAKE SPECIAL UNDER 37 C.F.R. 1.102 - VI - ENERGY

This is a decision on the petition filed on October 30, 2000, requesting that the above identified application be granted Special Status under Sections 37 C.F.R. 1.102 and M.P.E.P 708.02 VI.

The petition has been considered and found to comply with the requirements set forth under the above noted sections. Accordingly, the petition is granted.

The petition is GRANTED.

Richard V. Fisher

Richard V. Fisher, Director
Technology Center 1700
Chemical and Materials Engineering

James S. Parker
Saliwanchik, Lloyd and Saliwanchik
A Professional Association
2421 N.W. 41st Street, Suite A-1
Gainesville, FL 32606

UNITED STATES PATENT AND TRADEMARK OFFICE

COMMISSIONER FOR PATENTS
UNITED STATES PATENT AND TRADEMARK OFFICE
P.O. BOX 1450
ALEXANDRIA, VA 22313-1450
www.uspto.gov

MAILED

FEB 23 2004

DIRECTOR'S OFFICE
TECHNOLOGY CENTER 3600

GREENBERG TRAURIG, P.C.
77 WEST WACKER DRIVE
CHICAGO, IL 60601-1732

In re Application of
Marc Asher, et al.
Application No. 09/507,578
Filed: February 18, 2000
For: SYSTEM FOR PLACING PRODUCT DELIVERY ORDERS THROUGH THE INTERNET

DECISION ON PETITION TO WITHDRAW THE HOLDING OF ABANDONMENT

This is in reply to applicant's facsimile communications transmitted on December 9, 2003 and December 30, 2003 respectively to the United States Patent and Trademark Office which have been treated as a petition to withdraw the holding of abandonment under 37 CFR 1.181.

The petition is **DISMISSED**.

A review of the file record indicates that an Office Action was mailed to applicant on May 21, 2003 wherein a three-month shortened statutory period for response was set. Since no timely response to the May 21, 2003 Office Action was received and the six-month statutory time period for reply has expired, the application was abandoned and a notice to that effect was mailed on December 1, 2003

Petitioner has submitted with the petition copies of the response, one of which includes a Certificate of Mail dated November 21, 2003, and the other of which has a post card receipt date of November 24, 2003.

Any petition to withdraw the holding of abandonment based upon a Certificate of Mailing must include the following requirements:

(1) A copy of the original response bearing a signed Certificate of Mailing which includes the date of signing; and

(2) A statement under 37 CFR 1.8(b)(3) attesting to the personal knowledge of transmitting the *original* response on the date indicated on the Certificate of Mailing (see 37 CFR 1.8 and MPEP 512).

The petition fails, under requirements (1) and (2) above.

As to requirement (1) MPEP 512 states:

> "(C) When the certification is presented on a separate sheet, that sheet must (1) be signed and (2) fully identify and be securely attached to the paper it accompanies. The required identification should include the application number and filing date of the application as well as the type of paper being filed, e.g., reply to rejection or refusal, Notice of Appeal, etc...
>
> Moreover, without the proper identifying data, a certification presented on a separate sheet will not be considered acceptable if there is any question or doubt concerning the connection between the sheet and the paper filed."

The Certificate of Mailing is contained on a separate sheet and fails to fully identify the paper to which it accompanied. Therefore, the certification is not acceptable since there is no connection between the certification and the paper filed.

Further, the copy of the response with the post card receipt having the November 24, 2003 date is late as the six month period for response expired on November 21, 2003.

As to requirement (2) the petition fails to also include a statement under 37 CFR 1.8(b)(3) attesting to the personal knowledge of sending the *original* response by facsimile transmission on the date indicated on the certificate, by the person who signed the certificate.

Since applicant's petition to withdraw the Holding of Abandonment will not be granted applicant may wish to consider filing a petition to revive under 37 CFR 1.137(a) (unavoidable delay) or 37 CFR 1.137(b) (unintentional delay) as discussed below.

I. Unavoidable Delay.

> A grantable petition to revive an abandoned application under 37 CFR 1.137(a) must be accompanied by: **(1)** the required reply (unless previously filed), which may be met by the filing of a continuing application in a nonprovisional application abandoned for failure to prosecute; **(2)** the petition fee required by 37 CFR 1.17(l); and **(3)** an adequate showing to the satisfaction of the Commissioner that the entire delay in filing the required reply from the due date for the reply until the filing of a grantable petition pursuant to 37 CFR 1.137(a) was unavoidable.

The showing requirement can be met by submission of statements of fact establishing that the delay in filing the reply was unavoidable. This includes a satisfactory showing that the cause of the delay resulting in failure to reply in a timely fashion to the Office action was unavoidable. Diligence during the time period between abandonment and filing of the petition to revive must also be shown.

As an alternative to filing a petition for unavoidable abandonment, a petition for revival of an application abandoned unintentionally under 37 CFR 1.137(b) might be appropriate.

II. Unintentional Delay.

A grantable petition to revive an abandoned application under 37 CFR 1.137(b) must be accompanied by: (**1**) the required reply (unless previously filed), which may be met by the filing of a continuing application in a nonprovisional application abandoned for failure to prosecute; (**2**) the petition fee required by 37 CFR 1.17(m); and (**3**) a statement that the entire delay in filing the required reply from the due date for the reply until the filing of a grantable petition pursuant to 37 CFR 1.137(b) was unintentional.

The petition fee required by law for filing a petition under unavoidable standard is $110. The fee for a petition under the unintentional standard is $1,330. If applicant has, or can qualify as a "small entity" and does so prior to or together with the payment of the fee, the fee will be one-half of the amount indicated.

If not previously filed, the reply to the outstanding Office action must accompany the petition to revive.

The required items should be promptly submitted under a cover letter entitled "Petition to Revive".

Further correspondence with respect to a petition to revive should be addressed as follows:

By mail: Commissioner for Patents
P.O. Box 1450
Alexandria, VA 22313-1450

By Hand: Crystal Plaza 4, Suite 3C23
2201 South Clark Place
Arlington, VA 22202

Telephone inquiries regarding petitions to revive should be directed to the Office of Petitions Staff at (703) 305-9282.

Any request for reconsideration of this decision must be submitted within **TWO (2) MONTHS** from the mail date of this decision. Extensions of time under 37 CFR 1.136(a) are permitted. The reconsideration request should include a cover letter entitled "Renewed Petition Under 37 CFR 1.181."

Steven N. Meyers
Special Programs Examiner
Patent Technology Center 3600
(703) 308-3868

SNM/cps: 2/18/04

MAILED
FROM THE DIRECTOR'S OFFICE
MAY 0 4 2006
TECHNOLOGY CENTER 3600

UNITED STATES PATENT AND TRADEMARK OFFICE

Commissioner for Patents
United States Patent and Trademark Office
P.O. Box 1450
Alexandria, VA 22313-1450
www.uspto.gov

GREENBERG TRAURIG, P.C.
77 WEST WACKER DRIVE
CHICAGO, IL 60601-1732

In re Application of :
Marc Asher, et al. :
Application No. 09/507,578 :
Filed: February 18, 2000 :
For: SYSTEM FOR PLACING PRODUCT DELIVERY ORDERS THROUGH THE INTERNET

DECISION ON PETITION TO WITHDRAW THE HOLDING OF ABANDONMENT

This is in reply to applicants' renewed petition to withdraw the holding of abandonment under 37 CFR 1.181, filed April 26, 2004.

The petition is **GRANTED**.

A review of the file record indicates that an Office Action was mailed to applicants on May 21, 2003 wherein a three-month shortened statutory period for response was set. Since no timely response to the May 21, 2003 Office Action was received and the six-month statutory time period for reply had expired, the application was abandoned and a notice to that effect was mailed on December 1, 2003

Petitioner has submitted with the renewed petition copies of the response, one of which includes a Certificate of Mail dated November 21, 2003, and the other of which has a post card receipt date of November 24, 2003. The petitioner argues that MPEP 512 (C) does not require an applicant to include identifying data such as the type of paper being filed, in any Certificate of Mailing presented on a separate sheet. Instead, MPEP 512 (C) merely requires that the Certificate of Mailing be (1) signed and (2) fully identify and be securely attached to the paper it accompanies. The petitioner indicates that the Certificate of Mail dated November 21, 2003 meets the requirements of MPEP 512 (C) since the Petitioner signed the Certificate of Mail, stapled the Certificate of Mailing to the reply by stapling all of the papers and the Certificate of Mail together, as is common practice in the Chicago office of Greenberg Traurig, LLP and identified the Certificate of mail with the inventor's name, attorney docket information, application serial number, filing date, and title of invention. The petitioner also argues that the post card receipt dated November 24, 2003 expressly identified "Certificates of Mailing" as items submitted along with the Amendment and Communication which provides additional evidence that the USPTO received validly executed Certificates of Mail for both the Amendment and Communication and the Request for Extension of Time. The petitioner also included a statement attesting to the personal knowledge of transmitting the original response on the date indicated on the Certificate of Mailing. The evidence submitted by the petitioner is sufficient proof that the Amendment and Communication

and the Request for Extension of Time were timely filed and therefore the petition to withdraw the holding of abandonment under 37 CFR 1.181 is **GRANTED**.

Since a timely response to the Office action was filed, the holding of abandonment is withdrawn and the application is restored to pending status. The application is being forwarded to the Supervisory Legal Instruments Examiner for entry of the response filed with the petition, and then to the Examiner for prompt action on the merits of the application. The petitioner's Deposit Account No. 50-2428 will be credited the petition fee enclosed by the petitioner in the amount of $1330.00 since no fee is required for the petition. In the petition filed on April 26, 2004 the petitioner requested the enclosed petition fee be deposited in the petitioner's Deposit Account if the fee was not required to reinstate the application for examination.

for

Randolph A. Reese
Special Programs Examiner
Patent Technology Center 3600
(571) 272-6619

RAR/bkg: 10/19/05

UNITED STATES PATENT AND TRADEMARK OFFICE

Commissioner for Patents
United States Patent and Trademark Office
P.O. Box 1450
Alexandria, VA 22313-1450
www.uspto.gov

SCHIFF HARDIN LLP
PATENT DEPARTMENT
6600 SEARS TOWER
CHICAGO, IL 60606-6473

COPY MAILED

JUN 19 2007

OFFICE OF PETITIONS

In re Application of :
ASHER, Marc :
Application No. 09/507,578 :
Filed: February 18, 2000 :
Attorney Docket No. **P06,0184** :

DECISION ON PETITION

This is decision on the petition, filed May 24, 2007, under 37 CFR 1.313(c)(2) to withdraw the above-identified application from issue after payment of the issue fee.

The petition is **GRANTED**, *nunc pro tunc*.

It is noted that, although the petition to withdraw from issue has not been acted upon by the appropriate deciding official of the U.S. Patent and Trademark Office, the Technology Center processed the request for continued examination (RCE) under 37 CFR 1.114 and subsequently, on June 9, 2007 issued a new Notice of Allowance and Fee (s) Due and Notice of Allowability which has not yet been mailed. Where an issue fee has been paid and an RCE is subsequently filed, the RCE is not a proper filing unless a petition to withdraw from issue has been granted. Therefore, the examiner was without authority to act further in the case absent a grantable petition withdrawing the application from issue. Nevertheless, in view of this decision on petition, the RCE is now considered a proper filing and the actions of the examiner taken thereafter are hereby ratified.

Petitioner is advised that the issue fee paid on May 18, 2007 cannot be refunded. However, petitioner may request that it be applied towards the issue fee required by the new Notice of Allowance.[1]

The application is being referred to the Publishing Division for taking such further action as the nature of the case requires.

Telephone inquiries concerning this decision should be directed to Monica A. Graves at (571) 272-7253.

Karen Creasy

Karen Creasy
Petitions Examiner
Office of Petitions

---

[1] *The request to apply the issue fee to the new Notice may be satisfied by completing and returning the new Part B - Fee(s) Transmittal Form (along with any balance due at the time of submission). Petitioner is advised that the Issue Fee Transmittal Form* ***must*** *be completed and timely submitted to avoid abandonment of the application.*

UNITED STATES PATENT AND TRADEMARK OFFICE

COMMISSIONER FOR PATENTS
UNITED STATES PATENT AND TRADEMARK OFFICE
WASHINGTON, D.C. 20231
www.uspto.gov
DW 03-03

Paper No. 6

YVES BARBARIE
29 BD DE MONTMORENCY
PARIS 75016
FRANCE

COPY MAILED
MAR 2 8 2003
OFFICE OF PETITIONS

In re Application of	:	
Yves Barbarie	:	
Application No. 09/507,700	:	ON PETITION
Filed: 22 February, 2000	:	
For: AEROSTAT FOR TRANSPORTING	:	
EQUIPMENT AND PASSENGERS	:	

This letter is in response to the communication filed on 17 September and supplemented on 5 December, 2002, styled as a petition under 37 CFR 1.137(b) to revive the above-identified application. In the absence of the proper petition fee, this communication is being treated as a petition under 37 CFR 1.181 to withdraw the holding of abandonment.[1]

The petition is **DISMISSED**.

Any request for reconsideration of this decision must be submitted within TWO (2) MONTHS from the mail date of this decision. Extensions of time under 37 CFR 1.136(a) are permitted. The reconsideration request should include a cover letter entitled "Renewed Petition Under 37 CFR 1.137(b)." This is not a final agency decision.

The application became abandoned on 18 June, 2000, for failure to file a timely reply to the Notice to File Missing Parts of Nonprovisional Application mailed on 17 April, 2000, which set a two (2) month shortened period for reply. On 16 June, 2000, petitioner attempted to file an extension of time in accordance with 37 CFR 1.136(a), but no fee was received with that request. Notice of Abandonment was mailed on 7 August, 2002.

---

[1] In the absence of the petition fee, which is required by law, the PTO can only treat the instant petition as a (feeless 1.181) petition to withdraw the holding of abandonment. See Krahn v. Comm'r, 15 USPQ2d 1823, 1825 (E.D. Va. 1990).

On 22 October, 2002, the USPTO received $629.00. A total of $410.00 for the statutory basic filing fee and surcharge for its late filing is due, and $650.00 is due for the petition fee under 37 CFR 1.137(b). Therefore, a deficiency of $431.00 is due for consideration of a petition under 37 CFR 1.137(b).
In the absence of the petition fee, which is required by law, the PTO can only treat the instant petition as a (feeless 1.181) petition to withdraw the holding of abandonment.[2] The PTO will not reach the merits of any petition under 37 CFR 1.137 lacking the requisite petition fee.[3] As petitioner has not alleged circumstances which would warrant the withdrawal of the holding of abandonment, the petition will be dismissed.

As the papers filed on 17 September and 5 December, 2002, do not contain a proper statement of unintentional delay, it is recommended that petitioner use the attached USPTO form when filing a renewed petition under 37 CFR 1.137(b).

Further correspondence with respect to this matter should be addressed as follows:

By mail: Commissioner for Patents
Box DAC
Washington, DC 20231

OR (after 1 May, 2003)[4]

Mail Stop Petition
Commissioner for Patents
P.O. Box 1450
Alexandria, VA 22313-1450

By FAX: (703) 308-6916
Attn: Office of Petitions

By hand: Office of Petitions
2201 South Clark Place
Crystal Plaza 4, Suite 3C23
Arlington, VA

---

[2] See Krahn v. Comm'r, 15 USPQ2d 1823, 1825 (E.D. Va. 1990).

[3] MPEP 711.03(c); see 35 U.S.C. 41(a)(7).

[4] Effective 1 May, 2003, the U.S. Patent and Trademark Office is changing its address for some mail in preparation for its move to new office space in Alexandria, Virginia beginning at the end of 2003. See 68 Fed. Reg. 14332 (March 25, 2003).

Telephone inquiries should be directed to the undersigned at (703) 308-6918.

Douglas I. Wood
Senior Petitions Attorney
Office of Petitions

Encl: PTO/SB/64
Privacy Act Statement

UNITED STATES PATENT AND TRADEMARK OFFICE

COMMISSIONER FOR PATENTS
UNITED STATES PATENT AND TRADEMARK OFFICE
WASHINGTON, D.C. 20231
www.uspto.gov
DW 06-03

Paper No. 9

YVES BARBARIE
29 BD DE MONTMORENCY
PARIS 75016
FRANCE

COPY MAILED
JUN 04 2003
OFFICE OF PETITIONS

In re Application of	:	
Yves Barbarie	:	
Application No. 09/507,700	:	ON PETITION
Filed: 22 February, 2000	:	
For: AEROSTAT FOR TRANSPORTING	:	
EQUIPMENT AND PASSENGERS	:	

This is a decision on the petition under 37 CFR 1.137(b),[1] filed on 27 and supplemented on 28 May, 2003, to revive the above-identified application.

The petition is **GRANTED**.

The application became abandoned on 18 June, 2000, for failure to file a timely reply to the Notice to File Missing Parts of

---

[1]Effective December 1, 1997, the provisions of 37 CFR 1.137(b) now provide that where the delay in reply was unintentional, a petition may be filed to revive an abandoned application or a lapsed patent pursuant to 37 CFR 1.137(b). A grantable petition filed under the provisions of 37 CFR 1.137(b) must be accompanied by:

(1) the required reply, unless previously filed. In a nonprovisional application abandoned for failure to prosecute, the required reply may be met by the filing of a continuing application. In a nonprovisional application filed on or after June 8, 1995, and abandoned for failure to prosecute, the required reply may also be met by the filing of a request for continued examination in compliance with § 1.114. In an application or patent, abandoned or lapsed for failure to pay the issue fee or any portion thereof, the required reply must be the payment of the issue fee or any outstanding balance thereof. In an application abandoned for failure to pay the publication fee, the required reply must include payment of the publication fee.

(2) the petition fee as set forth in 37 CFR 1.17(m);

(3) a statement that the entire delay in filing the required reply from the due date for the reply until the filing of a grantable petition pursuant to 37 CFR 1.137(b) was unintentional. The Commissioner may required additional information where there is a question whether the delay was unintentional; and

(4) any terminal disclaimer (and fee as set forth in 37 CFR 1.20(d)) required pursuant to 37 CFR 1.137(c)).

Nonprovisional Application mailed on 17 April, 2000, which set a two (2) month shortened period for reply. On 16 June, 2000, petitioner attempted to file an extension of time in accordance with 37 CFR 1.136(a), but no fee was received with that request. Notice of Abandonment was mailed on 7 August, 2002. The petition filed on 17 September, 2002 (feeless 1.181 petition) was dismissed because petitioners had not filed the petition fee or the basic filing fee and surcharge for its late filing.

The present petition is accompanied by the petition fee, the statutory basic filing fee, and the surcharge for its late filing.

The application file is being forwarded to the Office of Initial Patent Examination for further processing.

Telephone inquiries concerning this matter may be directed to the undersigned at (703)308-6918.

DWood

Douglas I. Wood
Senior Petitions Attorney
Office of Petitions

UNITED STATES PATENT AND TRADEMARK OFFICE

COMMISSIONER FOR PATENTS
UNITED STATES PATENT AND TRADEMARK OFFICE
WASHINGTON, D.C. 20231
www.uspto.gov

Paper No. 8

EXXONMOBIL CHEMICAL COMPANY
LAW TECHNOLOGY
P.O. BOX 2149
BAYTOWN, TX 77522-2149

COPY MAILED

JUN 1 8 2002

OFFICE OF PETITIONS

In re Application of	:	
S. Yurchak	:	
Application No. 09/507,838	:	ON PETITION
Filed: February 22, 2000	:	
Attorney Docket No. RMH10512	:	

This is a decision on the petition under 37 CFR 1.137(b), filed May 20, 2002, to revive the above-identified application.

The petition is **GRANTED**.

The above-identified application became abandoned for failure to reply in a timely manner to the Notice to File Missing Parts of Application (Notice) mailed April 26, 2000. The Notice set a period for reply of two (2) months from the mail date of the Notice. No extensions of time under the provisions of 37 CFR 1.136(a) were obtained. Accordingly, the above-identified application became abandoned on June 27, 2000.

It is not apparent whether the person signing the statement of unintentional delay was in a position to have firsthand or direct knowledge of the facts and circumstances of the delay at issue. Nevertheless, such statement is being treated as having been made as the result of a reasonable inquiry into the facts and circumstances of such delay. See 37 CFR 10.18(b) and Changes to Patent Practice and Procedure; Final Rule Notice, 62 Fed. Reg. 53131, 53178 (October 10, 1997), 1203 Off. Gaz. Pat. Office 63, 103 (October 21, 1997). In the event that such an inquiry has not been made, petitioner must make such an inquiry. If such inquiry results in the discovery that it is not correct that the entire delay in filing the required reply from the due date for the reply until the filing of a grantable petition pursuant to 37 CFR 1.137(b) was unintentional, petitioner must notify the Office.

There is no indication that the person signing the instant petition was ever given a power of attorney or authorization of agent to prosecute the above-identified application. If the person signing the instant petition desires to receive future correspondence regarding this application, the appropriate power of attorney or

authorization of agent must be submitted. While a courtesy copy of this decision is being mailed to the person signing the instant petition, all future correspondence will be directed to the address of currently of record until such time as appropriate instructions are received to the contrary.

Telephone inquiries concerning this decision should be directed to Wan Laymon at (703) 305-9282.

The application file is being forwarded to Publishing Division.

Wan Laymon
Wan Laymon
Petitions Examiner
Office of Petitions
Office of the Deputy Commissioner
for Patent Examination Policy

cc: LAURENCE P. HOBBES
ROBERTS MLOTKOWSKI & HOBBES
3911 OLD LEE HIGHWAY SUITE 43B
FAIRFAX, VA 22030

UNITED STATES PATENT AND TRADEMARK OFFICE

Commissioner for Patents
United States Patent and Trademark Office
P.O. Box 1450
Alexandria, VA 22313-1450
www.uspto.gov

STEVENS & SHOWALTER LLP
7019 CORPORATE WAY
DAYTON OH 45459-4238

MAILED

JUL 14 2009

OFFICE OF PETITIONS

In re Patent No. 6,828,771
Issue Date: December 7, 2004
Application No. 09/508,136
Filed: June 5, 2000
Attorney Docket No. 595-001

NOTICE

This is a notice regarding your request for acceptance of a fee deficiency submission under 37 CFR 1.28 filed June 8, 2009.

The Office no longer investigates or rejects original or reissue patent under 37 CFR 1.56. **1098 Off. Gaz. Pat. Office 502 (January 3, 1989)**. Therefore, nothing in this Notice is intended to imply that an investigation was done.

Your fee deficiency submission under 37 CFR 1.28 is hereby **ACCEPTED**.

This patent is no longer entitled to small entity status. Accordingly, all future fees paid in this patent must be paid at the large entity rate.

Inquiries related to this communication should be directed to the undersigned at (571) 272-3215.

Charlema Grant
Petitions Attorney
Office of Petitions

06 APR 2004

#3

UNITED STATES PATENT AND TRADEMARK OFFICE

COMMISSIONER FOR PATENTS
UNITED STATES PATENT AND TRADEMARK OFFICE
P.O. BOX 1450
ALEXANDRIA, VA 22313-1450
www.uspto.gov

Robert J. Harris
Schwegman, Lundberg, Woessner & Kluth, P.A.
P.O. Box 2938
Minneapolis, MN 55402

In re Application of	:	
UHRICH	:	
PCT No.: PCT/US98/18816	:	DECISION ON PETITION
Application No.: 09/508,217	:	
Int. Filing Date: 10 September 1998	:	UNDER 37 CFR 1.181
Priority Date: 10 September 1997	:	
Atty. Docket No.: 1435.008US1	:	
For: POLYANHYDRIDES WITH THERAPEUTIC-	:	
ALLY USEFUL DEGRADATION PRODUCTS	:	

This is a decision on applicant's "Request For Reconstruction of Patent Application" filed on 26 September 2003 in the United States Patent and Trademark Office (USPTO). The Request is being treated as a petition under 37 CFR 1.181. No petition fee is due.

BACKGROUND

On 10 September 1998, applicant filed international application PCT/US98/18816 which claimed priority to an earlier application filed 10 September 1997. The thirty-month period for paying the basic national fee in the United States expired at midnight on 10 March 2000.

On 08 March 2000, applicant filed a transmittal letter for entry into the national stage in the United States which was accompanied by the requisite basic national fee as required by 35 U.S.C. 371(c)(1) and an Information Disclosure Statement.

On 26 September 2003, applicant filed the present request to reconstruct the national stage application. The request included a revocation and power of attorney with change in correspondence address.

DISCUSSION

A review of the application file finds the originally filed papers contained therein. As such, applicant's request for reconstruction is dismissed as moot.

CONCLUSION

For the reasons above, the petition under 37 CFR 1.181 is **DISMISSED AS MOOT**.

This application is being returned to the United States Designated/Elected Office (DO/EO/US) for treatment in accordance with this decision; specifically the mailing of a "Notification of Missing Requirements" (Form PCT/DO/EO/905) informing applicant that an executed oath or declaration of the inventor in compliance with 37 CFR 1.497(a)-(b) is required. In addition, applicant is required to provide payment of the surcharge for providing and oath or declaration of the inventor later than thirty months from the priority date.

Derek A. Putonen
Attorney Advisor
Office of PCT Legal Administration
Tel: (703) 305-0130
Fax: (703) 308-6459

UNITED STATES PATENT AND TRADEMARK OFFICE

COMMISSIONER FOR PATENTS
UNITED STATES PATENT AND TRADEMARK OFFICE
P.O. BOX 1450
ALEXANDRIA, VA 22313-1450
www.uspto.gov

SCHWEGMAN, LUNDBERG, WOESSNER & KLUTH, P.A.
P.O. BOX 2938
MINNEAPOLIS, MN 55402

COPY MAILED
MAY 0 8 2006
OFFICE OF PETITIONS

In re Application of	:	
Katherine E. Uhrich	:	DECISION ON REQUEST
Application No. 09/508,217	:	TO WITHDRAW FROM
Filed: June 18, 2004	:	RECORD
Attorney Docket No. 01435.008US1	:	

This is a decision on the Request to Withdraw as attorney or agent of record under 37 C.F.R. § 1.36(b), filed by facsimile transmission on March 24, 2006.

The request is **NOT APPROVED** as moot.

A review of the file record indicates that the power of attorney to all the attorneys or agents associated with Customer No. 21186 have been revoked by the assignee of the patent application. Accordingly, the request to withdraw under 37 C.F.R. § 1.36(b) is moot.

The correspondence address of record has been changed and the new correspondence address is the address indicated below.

This application file is being referred to Technology Center Art Unit 1711, for review of the amendment filed March 23, 2006.

Telephone inquires concerning this decision should be directed to Andrea Smith at (571) 272-3226.

Andrea Smith
Petitions Examiner
Office of Petitions

Conferee: Amelia Au

cc: VIKSNINS HARRIS & PADYS, PLLP
P.O. BOX 111098
ST. PAUL, MN 55111-1098

UNITED STATES PATENT AND TRADEMARK OFFICE

JAN 03 2001

Commissioner for Patents
United States Patent and Trademark Office
Washington, D.C. 20231
www.uspto.gov

#7

DOUGLAS W. SPRINKLE
Gifford, Kauss, Groh, Sprinkle,
Anderson & Citkowki, P.C.
280 N. Old Woodward, Suite 400
Birmingham, MI 48009

In re Application of Schlegel et al Application No.: 09/508,301 PCT No.: PCT/EP98/05765 Int. Filing Date: 10 September 1998 Priority Date: 10 September 1997 Attorney's Docket No.: MFA-11902/04 For: METHOD AND DEVICE FOR PROCESSING FRESH MEAT	DECISION ON PETITION UNDER 37 CFR 1.47(a)

This decision is in response to applicant's "PETITION FOR FILING PATENT APPLICATION BY OTHER THAN ALL THE INVENTORS- 37 CFR 1.47(a)" filed on 10 October 2000 that seeks the acceptance of the application without the signature of the inventor Jurgen Schlegel. .

BACKGROUND

On 10 September 1998, applicant filed international application PCT/EP98/05765, which claimed an earliest priority date of 10 September 1997. A copy of the international application was transmitted to the United States from the International Bureau on 18 March 1999.

On 09 March 2000, applicant filed a transmittal letter for entry into the national stage in the United States, which was accompanied by, inter alia, the requisite basic national fee as required by 35 U.S.C. 371(c)(1). No oath or declaration was submitted at such time.

On 08 May 2000, the United States Designated/Elected Office mailed a Notification of Missing Requirements under 35 U.S.C. 371 (Form PCT/DO/EO/905) indicating that the oath or declaration must be furnished within the period set forth in order to complete the requirements for acceptance under 35 U.S.C. 371. The notification also indicated that a surcharge for filing the oath or declaration later than 30 months from the priority date as stipulated by 37 CFR 1.492(e) will be required. The notification set a one month time limit or 31 months from the priority date for the application, whichever is later to respond.

On 10 October 2000, applicant filed the present petition under 37 CFR 1.47(a). Filed with the present petition were, inter alia: (1) a "DECLARATION AND POWER OF ATTORNEY" executed by inventors Mr. Hubert Verhaag and Mr. Wilfried Schworer on their behalf, as well as on behalf of non-signing inventor. Jurgen Schlegel; (3) a "DECLARATION OF FACTS IN SUPPORT OF FILING ON BEHALF OF OMITTED INVENTOR (37 C.F.R. § 1.47(a))" executed by Mr. Hubert Verhaag.

DISCUSSION

Section 409.03(d) of the Manual of Patent Examining Procedure (M.P.E.P.), **Proof of Unavailability or Refusal**, states, in part:

> Where a refusal of the inventor to sign the application paper is alleged, the circumstances of the refusal must be specified in an affidavit or declaration by the person to whom the refusal was made. Statements by a party not present when an oral refusal is made will not be accepted.
>
> Before a refusal can be alleged, it must be demonstrated that a *bona fide* attempt was made to present a copy of the application papers (specification, including claims, drawings and oath or declaration) to the nonsigning inventor for signature.
>
> When there is an express oral refusal, that fact along with the time and place of the refusal must be stated in the affidavit or declaration. When there is an express written refusal, a copy of the document evidencing that refusal must be made part of the affidavit or declaration.
>
> When it is concluded by the 37 CFR 1.47 applicant that a nonsigning inventor's conduct constitutes a refusal, all facts upon which that conclusion is based should be stated in an affidavit or declaration. If there is documentary evidence to support facts alleged in the affidavit or declaration, such evidence should be submitted. Whenever a nonsigning inventor gives a reason for refusing to sign the application oath or declaration, that reason should be stated in the affidavit or declaration."

Notwithstanding the statements to the contrary, it does not appear that Hubert Verhaag made a bona fide attempt to present a copy of the application papers (specification, including claims, drawings, and oath or declaration) to the non-signing joint inventor Mr. Jurgen Schlegel, and that after presentation of the complete copy Mr. Schlegel refused to sign the Declaration. Although Mr. Verhaag declares that he personally approached Mr. Schlegel, while they were both attending the MEFA fair in Zurich, Switzerland, and requested Mr. Schlegel to sign the assignment and declaration and power of attorney but that Mr. Schlegel refused. See Verhaag's Declaration at ¶ 10 and 11. However, these forms do not satisfy the requirement of section 409.03(d) because a complete copy of the application (i.e., specification, including claims and drawings) does not appeared to have been presented to Mr. Schlegel for reviewing and signing.

Accordingly, the current record does not support the premise that Mr. Schlegel's conduct constitutes refusal since a *bona fide* attempt was not made to present a copy of the application papers (specification, including claims, drawings and declaration) to Mr. Schlegel for his signature at the MEFA fair in Zurich.

Consequently, at this time it can not be concluded that Mr.Schlegel had refused to sign the documents based on the evidence provided and the date the filed affidavit was signed.

The petition fee of $130.00 is being charged to Deposit Account No. 07-1180 as authorized in the transmittal letter of 09 March 2000 for a declaration submitted after thirty months from the priority date.

DECISION

The petition under 37 CFR 1.47(a) is **DISMISSED** without prejudice.

If reconsideration of the merits of the petition under 37 CFR 1.47(a) is desired, applicant must file a request for reconsideration within **TWO (2) MONTHS** from the mail date of this Decision. Any reconsideration request should include a cover letter entitled "Renewed Petition Under 37 CFR 1.47(a)."

Any further correspondence with respect to this matter should be addressed to the Commissioner for Patents, Office of PCT Legal Administration, Box PCT, Washington, D.C. 20231, with the contents of the letter marked to the attention of the PCT Legal Office

Rafael Bacares
PCT Legal Examiner
PCT Legal Office

Richard Cole
PCT Legal Examiner
PCT Legal Office

Telephone: (703) 308-6312
Facsimile: (703) 308-6459

AUG 1 6 2001

#9

UNITED STATES PATENT AND TRADEMARK OFFICE

Commissioner for Patents
United States Patent and Trademark Office
Washington, D.C. 20231
www.uspto.gov

DOUGLAS W. SPRINKLE
Gifford, Kauss, Groh, Sprinkle,
Anderson & Citkowki, P.C.
280 N. Old Woodward, Suite 400
Birmingham, MI 48009

In re Application of	:	DECISION
Schlegel et al	:	
Application No.: 09/508,301	:	
PCT No.: PCT/EP98/05765	:	ON RENEWED PETITION
Int. Filing Date: 10 September 1998	:	
Priority Date: 10 September 1997	:	
Attorney's Docket No.: MFA-11902/04	:	UNDER 37 CFR 1.47(a)
For: METHOD AND DEVICE FOR	:	
PROCESSING FRESH MEAT	:	

This decision is in response to applicant's "RENEWED PETITION UNDER 37 CFR 1.47(a)" filed on 06 March 2001 that seeks the acceptance of the application without the signature of the inventor Jurgen Schlegel.

BACKGROUND

In a decision from this Office dated 03 January 2001, the 10 October 2000 petition was dismissed. The decision indicated that petitioner had not satisfied the requirement of section 409.03(d) because a complete copy of the application (i.e., specification, including claims and drawings) did not appear to have been presented to Mr. Schlegel for reviewing and signing. The decision further stated that the record did not support the premise that Mr. Schlegel's conduct constituted refusal since a *bona fide* attempt was not made to present a copy of the application papers (specification, including claims, drawings and declaration) to Mr. Schlegel for his signature at the MEFA fair in Zurich. Consequently, it could not be concluded that Mr.Schlegel had refused to sign the documents based on the evidence provided on 10 October 2000.

On 06 March 2001, applicant filed the present renewed petition under 37 CFR 1.47(a). Filed with the present petition is a supplemental declaration by Huber Verhaag under 37 CFR 1.[47].

DISCUSSION

The application together with second supplemental renewed petition under 37 CFR 1.47(a) have been reviewed and have been found to be in compliance with 37 CFR 1.47(a). the second supplemental renewed petition states that on 07 February 2001 Mr Verhaag again personally approached Mr. Schlegel and presented him with a complete copy of the above-identified application (including the specification, drawings, claims, declaration and power of attorney and assignment) for signature and that he again expressly refused to review or sign the declaration. This evidence is sufficient to establish that the Mr. Schlegel has refused to sign the declaration.

DECISION

The petition under 37 CFR 1.47(a) is **GRANTED**.

The Application Division and the International Division are authorized to accept the application as a 37 CFR 1.47(a) application and to mail a filing receipt.

A review of the application reveals that the requirements under 35 U.S.C. 371 for entry into the national stage in the US have been satisfied.

As provided in 37 CFR 1.47(a), a notice of the filing of this application will be forwarded to the non-signing inventor at his last known address of record.

A notice of the filing of the application under 37 CFR 1.47(a) will be published in the Official Gazette.

This application is being returned to the United States Designated/Elected Office (DO/EO/US) for continued processing under 35 U.S.C. 371. The 35 USC 371 date of this application is **10 October 2000**.

Rafael Bacares
PCT Legal Examiner
PCT Legal Office

Telephone: (703) 308-6312
Facsimile: (703) 308-6459

Richard Cole
PCT Legal Examiner
PCT Legal Office

UNITED STATES PATENT AND TRADEMARK OFFICE

UNDER SECRETARY OF COMMERCE FOR INTELLECTUAL PROPERTY AND
DIRECTOR OF THE UNITED STATES PATENT AND TRADEMARK OFFICE
WASHINGTON, DC 20231
www.uspto.gov

#7

Timothy E. Newholm
Boyle Fredrickson Ziolkowski
250 Plaza Suite 1030
250 East Wisconsin Avenue
Milwaukee, WI 53202

MAILED

JAN 15 2002

Office of the Director
Group 3600

In re Application of
Martin Greppmair
Application No. 09/508,356
Filed: March 9, 2000
For: WORKING MACHINE WITH REDUCED UPPER MASS VIBRATIONS

DECISION ON PETITION TO WITHDRAW THE HOLDING OF ABANDONMENT

This is in reply to applicant's communication, filed in the United States Patent and Trademark Office on November 28, 2001, which will be treated as a petition to withdraw the holding of abandonment.

The petition is **DISMISSED**.

A review of the file record indicates that an Office action was mailed on May 24, 2001 wherein a three-month shortened statutory period for response was set. Although no Notice of Abandonment has been mailed, the application is abandoned for failure to respond to the Office action of May 24, 2001.

Petitioner has submitted a "courtesy copy" of the amendment mailed on August 24, 2001.

The evidence submitted within the petition is not sufficient to establish with reasonable certainty that the response was received in the USPTO in a timely manner. Any such petition must include the following requirements: (1) a copy of a response bearing a signed Certificate of Mailing which includes the date of signing; and (2) a statement attesting to the personal knowledge of mailing the response on the date indicated on the Certificate of Mailing (see 37CFR 1.8 and MPEP 512).

In this case, applicant's petition lacks item (2). A statement signed by Jodi A. Calderon, attesting on a personal knowledge basis to the timely mailing of the response on the date indicated on the Certificate of Mailing is required.

Any request for reconsideration of this decision must be submitted within TWO (2) MONTHS from the mail date of this decision. Extensions of time under 37 CFR 1.136(b) are permitted. The reconsideration request should include a cover letter entitled "Renewed Petition to Withdraw the Holding of Abandonment Under 37 CFR 1.181."

Telephone inquiries relative to this decision should be directed to Special Programs Examiner Kenneth Dorner at (703) 308-0866.

For Gerald Goldberg, Director
Patent Technology Center 3600
(703) 308-1134

UNITED STATES PATENT AND TRADEMARK OFFICE

#11

UNDER SECRETARY OF COMMERCE FOR INTELLECTUAL PROPERTY AND
DIRECTOR OF THE UNITED STATES PATENT AND TRADEMARK OFFICE
WASHINGTON, DC 20231
www.uspto.gov

Timothy E. Newholm
Boyle, Fredrickson, Ziolkowski
250 Plaza Suite 1030
250 East Wisconsin Avenue
Milwaukee, WI 53202

MAILED

FEB 22 2002

Office of the Director
Group 3600

In re Application of
Martin Greppmair
Application No. 09/508,356
Filed: March 9, 2000
For: WORKING MACHINE WITH REDUCED UPPER MASS VIBRATIONS

DECISION ON PETITION TO WITHDRAW THE HOLDING OF ABANDONMENT

This is in reply to applicant's renewed petition to withdraw the holding of abandonment, filed in the United States Patent and Trademark Office on February 4, 2002.

The petition is **GRANTED**.

A review of the file record indicates that the application was held abandoned for failure to timely respond to the Office action dated May 24, 2001.

Applicant's original communication received November 28, 2001 included a copy of a response bearing a Certificate of Mailing date of August 24, 2001 but lacked the personal knowledge statement required by 37 CFR 1.8(b)(3). The renewed petition received on February 4, 2002 includes a statement by Jody A. Calderon which attests to the personal knowledge of mailing the response on the date indicated on the Certificate of Mailing. This is sufficient evidence of a timely response.

Also, upon further review of the file, it is noted that the original response has been placed in the file. Since the original the amendment was submitted by the applicant on August 24, 2001, and has since been matched with the proper file, the holding of abandonment is withdrawn and the application is restored to pending status. The application is being forwarded to the Supervisory Legal Instruments Examiner for entry of the amendment, and then to the Primary Examiner for prompt action on the merits of the application.

Telephone inquiries relative to this decision should be directed to Special Programs Examiner Randolph Reese at (703) 308-2121.

Michael Carone, Acting Director
Patent Technology Center 3600
Telephone No.: (703) 306-4180
Facsimile No.: (703) 306-4598

RR

RR/dc: 2/21/02

Approved for use through 04/30/2009. OMB 0651-0016
U.S. Patent and Trademark Office: U.S. DEPARTMENT OF COMMERCE
Under the Paperwork Reduction Act of 1995, no persons are required to respond to a collection of information unless it displays valid OMB control number.

PETITION TO ACCEPT UNINTENTIONALLY DELAYED PAYMENT OF MAINTENANCE FEE IN AN EXPIRED PATENT (37 CFR 1.378(c))

Patent Number	Issue Date (YYYY-MM-DD)	Application Number	Filing Date (YYYY-MM-DD)	Docket Number (if applicable)
6,667,035	2003-12-23	09/508,413	2000-03-27	

CAUTION: Maintenance fee (and surcharge, if any) payment must correctly identify: (1) the patent number and (2) the application number of the actual U.S. application leading to issuance of that patent to ensure the fee(s) is/are associated with the correct patent. 37 CFR 1.366(c) and (d).

SMALL ENTITY

☐ Patentee claims, or has previously claimed, small entity status. See 37 CFR 1.27.

LOSS OF ENTITLEMENT TO SMALL ENTITY STATUS

☐ Patentee is no longer entitled to small entity status. See 37 CFR 1.27(g)

NOT Small Entity			Small Entity		
	Fee	Code		Fee	Code
◉	3 ½ year	(1551)	○	3 ½ year	(2551)
○	7 ½ year	(1552)	○	7 ½ year	(2552)
○	11 ½ year	(1553)	○	11 ½ year	(2553)

SURCHARGE

The surcharge required by 37 CFR 1.20(i)(2) (Fee Code 1558) must be paid as a condition of accepting unintentionally delayed payment of the maintenance fee.

MAINTENANCE FEE (37 CFR 1.20(e)-(g))

The appropriate maintenance fee must be submitted with this petition.

STATEMENT

THE UNDERSIGNED CERTIFIES THAT THE DELAY IN PAYMENT OF THE MAINTENANCE FEE TO THIS PATENT WAS UNINTENTIONAL

PETITIONER(S) REQUEST THAT THE DELAYED PAYMENT OF THE MAINTENANCE FEE BE ACCEPTED AND THE PATENT REINSTATED

THIS PORTION MUST BE COMPLETED BY THE SIGNATORY OR SIGNATORIES

37 CFR 1.378(d) states: "Any petition under this section must be signed by an attorney or agent registered to practice before the Patent and Trademark Office, or by the patentee, the assignee, or other party in interest."

I certify, in accordance with 37 CFR 1.4(d)(4) that I am

◉ An attorney or agent registered to practice before the Patent and Trademark Office

○ A sole patentee

○ A joint patentee; I certify that I am authorized to sign this submission on behalf of all the other patentees.

○ A joint patentee; all of whom are signing this e-petition

○ The assignee of record of the entire interest

Patent Practitioner			
A signature of the applicant or representative is required in accordance with 37 CFR 1.33 and 10.18. Please see 37 CFR 1.4(d) for the form of the signature			
Signature	/Stephan A. Pendorf/	Date (YYYY-MM-DD)	2008-05-02
Name	Stephan A. Pendorf	Registration Number	32665

This collection of information is required by 37 CFR 1.378(c). The information is required to obtain or retain a benefit by the public which is to file (and by the USPTO to process) an application. Confidentiality is governed by 35 U.S.C. 122 and 37 CFR 1.11 and 1.14. This collection is estimated to take 1 hour to complete, including gathering, preparing, and submitting the completed application form to the USPTO. Time will vary depending upon the individual case. Any comments on the amount of time you require to complete this form and/ or suggestions for reducing this burden, should be sent to the Chief Information Officer, U.S. Patent and Trademark Office, U.S. Department of Commerce, P.O. Box 1450, Alexandria, VA 22313-1450. DO NOT SEND FEES OR COMPLETED FORMS TO THIS ADDRESS. **This form can only be used when in conjunction with EFS-Web. If this form is mailed to the USPTO, it may cause delays in reinstating the patent.**

Privacy Act Statement

The Privacy Act of 1974 (P.L. 93-579) requires that you be given certain information in connection with your submission of the attached form related to a patent application or patent. Accordingly, pursuant to the requirements of the Act, please be advised that: (1) the general authority for the collection of this information is 35 U.S.C. 2(b)(2); (2) furnishing of the information solicited is voluntary; and (3) the principal purpose for which the information is used by the U.S. Patent and Trademark Office is to process and/or examine your submission related to a patent application or patent. If you do not furnish the requested information, the U.S. Patent and Trademark Office may not be able to process and/or examine your submission, which may result in termination of proceedings or abandonment of the application or expiration of the patent.

The information provided by you in this form will be subject to the following routine uses:

1. The information on this form will be treated confidentially to the extent allowed under the Freedom of Information Act (5 U.S.C. 552) and the Privacy Act (5 U.S.C. 552a). Records from this system of records may be disclosed to the Department of Justice to determine whether the Freedom of Information Act requires disclosure of these record s.

2. A record from this system of records may be disclosed, as a routine use, in the course of presenting evidence to a court, magistrate, or administrative tribunal, including disclosures to opposing counsel in the course of settlement negotiations.

3. A record in this system of records may be disclosed, as a routine use, to a Member of Congress submitting a request involving an individual, to whom the record pertains, when the individual has requested assistance from the Member with respect to the subject matter of the record.

4. A record in this system of records may be disclosed, as a routine use, to a contractor of the Agency having need for the information in order to perform a contract. Recipients of information shall be required to comply with the requirements of the Privacy Act of 1974, as amended, pursuant to 5 U.S.C. 552a(m).

5. A record related to an International Application filed under the Patent Cooperation Treaty in this system of records may be disclosed, as a routine use, to the International Bureau of the World Intellectual Property Organization, pursuant to the Patent Cooperation Treaty.

6. A record in this system of records may be disclosed, as a routine use, to another federal agency for purposes of National Security review (35 U.S.C. 181) and for review pursuant to the Atomic Energy Act (42 U.S.C. 218(c)).

7. A record from this system of records may be disclosed, as a routine use, to the Administrator, General Services, or his/her designee, during an inspection of records conducted by GSA as part of that agency's responsibility to recommend improvements in records management practices and programs, under authority of 44 U.S.C. 2904 and 2906. Such disclosure shall be made in accordance with the GSA regulations governing inspection of records for this purpose, and any other relevant (i.e., GSA or Commerce) directive. Such disclosure shall not be used to make determinations about individuals.

8. A record from this system of records may be disclosed, as a routine use, to the public after either publication of the application pursuant to 35 U.S.C. 122(b) or issuance of a patent pursuant to 35 U.S.C. 151. Further, a record may be disclosed, subject to the limitations of 37 CFR 1.14, as a routine use, to the public if the record was filed in an application which became abandoned or in which the proceedings were terminated and which application is referenced by either a published application, an application open to public inspections or an issued patent.

9. A record from this system of records may be disclosed, as a routine use, to a Federal, State, or local law enforcement agency, if the USPTO becomes aware of a violation or potential violation of law or regulation.

UNITED STATES PATENT AND TRADEMARK OFFICE

Commissioner for Patents
United States Patent and Trademark Office
P.O. Box 1450
Alexandria, VA 22313-1450
www.uspto.gov

In re Patent No. 6667035
Issue Date: December 23,2003
Application No. 09508413
Filed: March 27,2000
Attorney Docket No. 415142000200

:
:DECISION GRANTING PETITION
:UNDER 37 CFR 1.378(c)
:

This is a decision on the electronic petition, filed May 2,2008 ,under 37 CFR 1.378(c) to accept the unintentionally delayed payment of the 3.5 year maintenance fee for the above-identified patent.

The petition is GRANTED.

The maintenance fee is accepted, and the above-identified patent reinstated as of May 2,2008 . This decision also constitutes notice that the fee has been accepted. An electronic copy of the petition and this decision has been created as an entry in an Image File Wrapper. Nevertheless, petitioner should print and retain an independent copy

Telephone inquires related to this electronic decision should be directed to the Electronic Business Center at 1-866-217-9197.

UNITED STATES PATENT AND TRADEMARK OFFICE

UNITED STATES DEPARTMENT OF COMMERCE
United States Patent and Trademark Office
Address: COMMISSIONER OF PATENTS AND TRADEMARKS
Washington, D.C. 20231
www.uspto.gov

APPLICATION NO.	FILING DATE	FIRST NAMED INVENTOR	ATTORNEY DOCKET NO.	CONFIRMATION NO.
09/508,519	03/27/2000	TSUYOSHI KOMAKI	P107424-0000	7915

23353 7590 02/26/2002

RADER FISHMAN & GRAUER PLLC
LION BUILDING
1233 20TH STREET N.W., SUITE 501
WASHINGTON, DC 20036

EXAMINER
MCCLENDON, SANZA L

ART UNIT	PAPER NUMBER
1711	

DATE MAILED: 02/26/2002

Please find below and/or attached an Office communication concerning this application or proceeding.

UNITED STATES PATENT AND TRADEMARK OFFICE

COMMISSIONER FOR PATENTS
UNITED STATES PATENT AND TRADEMARK OFFICE
WASHINGTON, D.C. 20231
www.uspto.gov

Paper No. 11

In re Application of KOMAKI, et al

Application No. 09/508,519
Filed: March 27, 2000
Attorney Docket No. P107424-0000

: DECISION GRANTING PETITION
: TO RESET PERIOD FOR REPLY
:

This is a decision on the petition filed on January 29, 2002, requesting that the shortened statutory period for reply set forth in the Office communication mailed on November 28, 2001 be reset to run from the date on which the Office communication was actually received at the correspondence address of record.

The petition is granted.

Petitioner provided a statement that the Office communication in question was received at the correspondence address of record on January 16, 2002. The petition was filed within two weeks of receipt of the Office communication. A substantial portion of the set reply period had elapsed on the date of receipt. Furthermore, the Office communication was mailed between October 13, 2001 and January 2, 2002, when delivery of mail from the Office to certain regions of the country was delayed.

Accordingly, the shortened statutory period that was originally set forth in the Office communication originally mailed on November 28, 2001 is hereby reset to run FROM THE RECEIPT DATE OF January 16, 2002.

James J. Seidleck
Technology Center 1700
703 – 308 - 2462

RADER FISHMAN & GRAUER PLLC
LION BUILDING
1233 20TH STREET N.W., SUITE 501
WASHINGTON DC 20036

UNITED STATES PATENT AND TRADEMARK OFFICE

COMMISSIONER FOR PATENTS
UNITED STATES PATENT AND TRADEMARK OFFICE
P.O. BOX 1450
ALEXANDRIA, VA 22313-1450
www.uspto.gov

Mailed: JUL 22 2004

BC
Paper Number:

In re application of	:	
Kazuya Otsuji et al.	:	DECISION ON
Serial No. 09/508,540	:	PETITION
Filed: April 7, 2000	:	
For: DISPOSABLE BRUSH	:	

This is a decision on the PETITION UNDER 37 CFR 1.181 TO INDICATE CONSIDERATION OF THE INFORMATION DISCLOSURE STATEMENT OF MARCH 22, 2004 filed on April 13, 2004. The instant petition under 37 CFR 1.181 was timely filed to formally request that the office indicate consideration of the information disclosure statement of March 22, 2004 that was previously filed.

DECISION

The information disclosure statement filed on March 22, 2004 complies with the requirements set forth in 37 CFR 1.97 and 27 CFR 1.98. Accordingly, this information disclosure statement has now been considered by the examiner and attached to this Decision.

This Petition is **GRANTED**.

Jacqueline M. Stone, Director
Technology Center 1700
Chemical and Materials Engineering

J. Derek Mason, Ph.D.
Oblon, Spivak, McClelland, Maier & Neustadt, P.C.
1940 Duke Street
Alexandria, VA 22314

Attachments: initialed copy of the PTO-1449 submitted on 3/22/04

SEP 2 4 2001

UNITED STATES PATENT AND TRADEMARK OFFICE

#7

Commissioner for Patents
United States Patent and Trademark Office
Washington, D.C. 20231
www.uspto.gov

OLIFF & BERRIDGE
PO Box 19928
Alexandria, VA 22320

In re Application of	:	
AKAIWA, Shoichi	:	
U.S. Application No.: 09/508,640	:	
PCT No.: PCT/JP99/03606	:	DECISION
International Filing Date: 02 July 1999	:	
Priority Date: 15 July 1998	:	
Attorney's Docket No.: 105032	:	
For: VIDEO DISPLAY DEVICE AND METHOD OF ADJUSTMENT THEREOF	:	

On 08 December 2000, the United States Designated/Elected Office (DO/EO/US) mailed a Notification Abandonment (Form PCT/DO/EO/909) indicating that this application was abandoned with respect to the United States for failure to respond to the Notification Of Missing Requirements mailed 05 June 2000.

On 25 June 2001, applicant filed the "Resubmission Of Response To Notification Of Missing Requirements" considered herein, which has been treated as a petition under 37 CFR 1.181 to confirm the earlier filing of a timely response to the Notification Of Missing Requirements mailed 05 June 2000 and a petition under 37 CFR 1.182 to correct the incorrect application number listed on the original submission. As discussed below, the petitions are **GRANTED**.

Among the materials accompanying the present petitions are copies of a "Response To Notification Of Missing Requirements," an executed declaration, and a return postcard that specifically identifies the present application, itemizes the Response (including the declaration and the $130 surcharge payment), and bears a USPTO receipt stamp dated 16 June 2000. It is noted that the Response, the transmittal letter, and the return postcard all incorrectly identify the United States application number as 09/580,640.

Based on applicants' statements, the stamped return postcard, and internal USPTO records which confirm receipt of the $130 surcharge payment on 16 June 2000 (in application number 09/580,640), it is concluded that the "Response To Notification Of Missing Requirements" attached to the present petition, including the executed declaration and the surcharge payment, was originally filed on 16 June 2000.

The granting of the present petition under 37 CFR 1.182 allows the 16 June 2000 submission to be treated as having been made in the present application. Based on this correction, the 16 June 2000 submission is considered as a timely response to the Notification Of

Missing Requirements mailed herein on 05 June 2000. Accordingly, the Notification Of Abandonment (Form PCT/DO/EO/909) mailed on 08 December 2000, based as it was on applicants' purported failure to file a timely response to the Notification Of Missing Requirements, is appropriately **VACATED**.

A review of the declaration filed on 16 June 2000 reveals that it is in compliance with 37 CFR 1.497.

This application is being forwarded to the National Stage Processing Branch of the Office of PCT Operations for further processing in accordance with this decision. The 35 U.S.C. 371(c) date is 16 June 2000.

Boris Milef
PCT Legal Examiner
PCT Legal Office

Richard M. Ross
PCT Petitions Attorney
PCT Legal Office
Telephone: (703) 308-6155
Facsimile: (703) 308-6459

RMR/BM:rmr

UNITED STATES DEPARTMENT OF COMMERCE
Patent and Trademark Office
Address: COMMISSIONER OF PATENTS AND TRADEMARKS
Washington, D.C. 20231

SERIAL NUMBER	REQUEST DATE	FIRST NAMED APPLICANT	ATTORNEY DOCKET NO.
09/508,661	**11/27/00**	**SACHETTO, ET AL**	**NONE**

Title: **XANTHUM GUM AND HPMC FOR THE TREATMENT OF IBD**

Art Unit	Paper Number

Correspondence Address:
JAMES HELLWEGE
PMB 300
2101 CRYSTAL PLAZA ARCADE
ARLINGTON, VA 22202

Licensee under 35 U.S.C. 184 is hereby granted to file in any foreign country a patent application and any amendments thereto corresponding to the subject matter of this U.S. application identified above and/or any material accompanying the petition. This license is conditioned upon modification of any applicable secrecy order and is subject to revocation without notice.

License Number: 529,745

Grant Date: 07-Nov-02

This license is granted retroactively to the date(s) and the country(s) indicated on the attached decision.

Approved

for Commissioner of Patents and Trademar

This license empowers the filing, the causation and the authorization of the filing of a foreign application or applications on the subject matter identified above, subsequent forwarding of all duplicate and formal papers and the prosecution of such aplication or applications.

This license is granted under 37 CFR 5.15(a).

This license is to be retained by the licensee and may be used at anytime on or after the date thereof. This license is not retroactive unless specifically indicated.

The grant of this license does not in any way lesson the responsibility of the licensee for the security of the subject matter as imposed by any Government contract or the provisions of existing laws relating to espionage and the national security or the export of technical data. Licensees should apprise themselves of current regulations, especially with respecct to certain countries, of other agencies, particularly the Department of the Treasury; Office of Munitions Control, Department of State (with respect to Arms, Munitions and Implements of War); the Bureau of Trade Regulation, Office of Export Adminstration, Department of Commerce; and the Department of Energy.

LICENSE FOR FOREIGN FILING

[Title 35, United States Code (1952) Sections 184, 185, 186]

UNITED STATES PATENT AND TRADEMARK OFFICE

UNDER SECRETARY OF COMMERCE FOR INTELLECTUAL PROPERTY AND
DIRECTOR OF THE UNITED STATES PATENT AND TRADEMARK OFFICE
WASHINGTON, DC 20231
www.uspto.gov

James W. Hellwege
Birch, Stewart, Kolasch & Birch
P.O. Box 747
Falls Church, Virginia 22040

In re:	Sachetto et al	:	DECISION ON REQUEST
Serial No.:	09/508,661	:	UNDER 37 CFR 5.25
Filing date:	May 26, 2000		
Docket No:	n/a		

Title: XANTHAN GUM AND HPMC FOR THE TREATMENT OF IBD

In view of the communication(s) filed July 5, 2002, it has been determined that a retroactive license for foreign filing under 35 U.S.C. 184 be granted with respect to the filings listed below. The petition complies with 37 C.F.R. 5.25 in that there is an adequate showing that the subject matter in question was not under secrecy order, that the license was diligently sought after discovery of the proscribed foreign filing, and that the material was filed abroad without the required license under 37 C.F.R. 5.11 first having been obtained through error and without deceptive intent.

Country	Date
UK	September 26, 1997
UK	September 28, 1997
PCT	September 25, 1998

Approved:

Ian J. Lobo
Patent Examiner
Group 3600
(703) 306-4161

OIPE JC112
JUL 19 2005
PATENT & TRADEMARK OFFICE

07/20/05 #09508758 IFW

RECEIVED
AUG 16 2005
OFFICE OF PETITIONS

Mailed via Express Mail Mailing Label
No. EV 576546421 US on July 19, 2005

IN THE UNITED STATES PATENT AND TRADEMARK OFFICE

Patent No.:	6,879,579	)	MEDIUM ACCESS CONTROL PROTOCOL FOR DATA COMMUNICATIONS
Issued:	April 12, 2005	)	
Inventors:	Myles et al.	)	
Docket No.:	SPR4388P0110US	)	

RECEIVED
OIPE/IAP
AUG 12 2005

REQUEST FOR CERTIFICATE OF CORRECTION OF ASSIGNEES' NAMES

RECEIVED
JUL 25 2005
OFFICE OF PETITIONS

Mail Stop Petitions
Commissioner for Patents
P.O. Box 1450
Alexandria, VA 22313-1450

RECEIVED
OIPE/IAP
SEP 27 2005

Sir:

The above patent issued without one of the assignees' names. You are hereby requested to issue a Certificate of Correction including Macquarie University as an additional assignee.

Additionally, please find:

(A) the enclosed petition fee required by 37 C.F.R. 1.17(h);

(B) by way of this document, a request that 37 C.F.R. 3.81(a) be waived to permit the correct name of the assignee to be provided after issuance of the patent;

(C) by way of this document, the following statement that the failure to include the correct assignee name on the PTOL-85B form was inadvertent; and

(D) the enclosed copy of the Notice of the Recordation of Assignment Document, including a copy of the request for Notice correction, faxed on July 19, 2005, as the Notice incorrectly omitted assignee Macquarie University.

07/21/2005 MAHMED1 00000017 6879579
01 FC:1464 130.00 OP

Please charge any additional fees that may be found due to Deposit Account No. 23-0785.

Respectfully submitted,

By: Allen J. Hoover

Allen J. Hoover
Reg. No. 24,103

Wood, Phillips, Katz, Clark & Mortimer
500 W. Madison Street – Suite 3800
Chicago, Illinois 60661-2511
Telephone: (312) 876-1800
Facsimile: (312) 876-2020
July 19, 2005

OIPE JC172
JUL 19 2005
PATENT & TRADEMARK OFFICE

WOOD, PHILLIPS, KATZ, CLARK & MORTIMER
500 West Madison Street, Suite 3800
Chicago, Illinois 60661-2511
Telephone (312) 876-1800
Facsimile (312) 876-2020

Approved-T.H
8/25/08

RECEIVED
AUG 16 2005
OFFICE OF PETITIONS

Date: July 19, 2005

To: Assignment Services Division,
U.S. Patent and Trademark Office
Facsimile No.: (703) 306-5995

RECEIVED
JUL 25 2005
OFFICE OF PETITIONS

From: Allen J. Hoover
Reg. No. 24,103
Direct Phone (312) 876-2107
E-Mail AJHOOVER @ WOODPHILLIPS.COM

Re: Assignment Notice Correction
Re: U.S. Patent No. 6,879,579, issued April 12, 2005
Our Docket No.: SPR4388P0110US

Please refer to the circled portions of the notice compared to the circled portions of the assignment transmittal sheet and assignment documents.

Specifically, the notice fails to include the second assignee, Macquarie University. Appropriate correction is requested.

Allen J. Hoover

THE MESSAGE TRANSMITTED UNDER THIS COVER IS INTENDED FOR THE NAMED RECIPIENT ONLY, AND MAY CONTAIN BUSINESS CONFIDENTIAL INFORMATION, OR INFORMATION SUBJECT TO ATTORNEY-CLIENT PRIVILEGE, OR ATTORNEY WORK PRODUCT IMMUNITY. IN THE EVENT THIS MESSAGE IS RECEIVED AT A LOCATION WHERE IT CANNOT BE CONVEYED TO THE NAMED RECIPIENT, KINDLY NOTIFY THE SENDER IMMEDIATELY BY TELEPHONE/FACSIMILE (IF LONG DISTANCE, PLEASE CALL COLLECT), AND RETURN THE RECEIVED MESSAGE TO US BY MAIL.

SPR 4388 P0110 US AJH

OIPE JC112
JUL 19 2005
PATENT & TRADEMARK OFFICE

UNITED STATES DEPARTMENT OF COMMERCE
Patent and Trademark Office
ASSISTANT SECRETARY AND COMMISSIONER
OF PATENTS AND TRADEMARKS
Washington, D.C. 20231

AUGUST 21, 2000

PTAS

ROCKEY, MILNAMOW & KATZ, LTD.
ALLEN J. HOOVER
180 NORTH STETSON AVENUE, SUITE 4700
TWO PRUDENTIAL PLAZA
CHICAGO, ILLINOIS 60601

RECEIVED
SEP - 5 2000
Rockey, Milnamow & Katz, Ltd.

101395028A

RECEIVED
AUG 16 2005
OFFICE OF PETITIONS

RECEIVED
JUL 25 2005
OFFICE OF PETITIONS

UNITED STATES PATENT AND TRADEMARK OFFICE
NOTICE OF RECORDATION OF ASSIGNMENT DOCUMENT

THE ENCLOSED DOCUMENT HAS BEEN RECORDED BY THE ASSIGNMENT DIVISION OF THE U.S. PATENT AND TRADEMARK OFFICE. A COMPLETE MICROFILM COPY IS AVAILABLE AT THE ASSIGNMENT SEARCH ROOM ON THE REEL AND FRAME NUMBER REFERENCED BELOW.

PLEASE REVIEW ALL INFORMATION CONTAINED ON THIS NOTICE. THE INFORMATION CONTAINED ON THIS RECORDATION NOTICE REFLECTS THE DATA PRESENT IN THE PATENT AND TRADEMARK ASSIGNMENT SYSTEM. IF YOU SHOULD FIND ANY ERRORS OR HAVE QUESTIONS CONCERNING THIS NOTICE, YOU MAY CONTACT THE EMPLOYEE WHOSE NAME APPEARS ON THIS NOTICE AT 703-308-9723. PLEASE SEND REQUEST FOR CORRECTION TO: U.S. PATENT AND TRADEMARK OFFICE, ASSIGNMENT DIVISION, BOX ASSIGNMENTS, CG-4, 1213 JEFFERSON DAVIS HWY, SUITE 320, WASHINGTON, D.C. 20231.

RECORDATION DATE: 05/30/2000

REEL/FRAME: 010883/0393
NUMBER OF PAGES: 5

BRIEF: ASSIGNMENT OF ASSIGNOR''S INTEREST (SEE DOCUMENT FOR DETAILS).

ASSIGNOR:
MYLES, FREDERICK ANDREW — DOC DATE: 05/16/2000

ASSIGNOR:
SKELLERN, DAVID JAMES — DOC DATE: 05/16/2000

ASSIGNOR:
DEANE, JOHN FRASER — DOC DATE: 05/16/2000

ASSIGNOR:
PERCIVAL, TERENCE MICHAEL PAUL — DOC DATE: 05/12/2000

ASSIGNEE:
COMMONWEALTH SCIENTIFIC AND
INDUSTRIAL RESEARCH ORGANISATION
LIMESTONE AVENUE
CAMPBELL
AUSTRALIAN CAPITAL TERRITORY

AUSTRALIA
2612

SERIAL NUMBER: 09508758
PATENT NUMBER:

FILING DATE: 05/30/2000
ISSUE DATE:

SHIRLIE SIMON, EXAMINER
ASSIGNMENT DIVISION
OFFICE OF PUBLIC RECORDS

5-30-00

Comparable to Form PTO-1619A-B
Expires 06/03/99
OMB0651-0027

07-03-2000

101395028

SHEET

U.S. Department of Commerce
Patent and Trademark Office
PATENT

TO: The Commissioner of Pat ashington, D.C. 20231
Please record the attached

SUBMISSION TYPE

- ☒ New
- ☐ Resubmission (Non-Recordation) Document ID#
- ☐ Correction of PTO Error Reel # Frame#
- ☐ Corrective Document Reel # Frame#

CONVEYANCE TYPE

- ☒ Assignment
- ☐ License
- ☐ Merger
- ☐ Security Agreement
- ☐ Change of Name
- ☐ Other

U.S. Government
(For Use ONLY by U.S. Government Agencies)
☐ Department File ☐ Secret File

RECEIVED
AUG 1 2 2005
OFFICE OF PETITIONS

CONVEYING PARTY(IES): (Last name first)

	Execution Date
Myles, Andrew Frederick	May 16, 2000
Skellern, David James	May 16, 2000
Deane, John Fraser	May 16, 2000
Percival, Terence Michael Paul	May 12, 2000

Mark if additional names of conveying parties attached ☒

RECEIVING PARTY:

Name: Commonwealth Scientific and Industrial Research Organisation
Address: Limestone Avenue
City: Campbell
State, Country: Australian Capital Territory, Australia
Postal Code: 2612

Mark if additional names of receiving parties attached ☒

APPLICATION NUMBER(S) OR PATENT NUMBER(S) Mark if additional numbers attached ☐

Enter either the Patent Application Number or the Patent Number (DO NOT ENTER BOTH numbers for the same property).
If this document is being filed together with a new Patent Application, enter the date the patent application was signed by the first named inventor: 00/00/00

Patent Application Number(s):

09/508,758

Patent Number(s):

TOTAL NUMBER OF PROPERTIES: Enter the total number of properties involved: One

PATENT COOPERATION TREATY (PCT):
Enter PCT application number only if a U.S. Application Number has not been assigned:

06/30/2000 DCDATES 00000091 09508758
01 FC:581
40.00 OP

RECEIVED
JUL 2 5 2005
OFFICE OF PETITIONS

NUMBER OF PAGES:
Enter the total number of pages contained in the conveyance document including any attachment(s). DO NOT include the Recordation Form Cover Sheet pages in this total.

Three

CORRESPONDENT NAME AND ADDRESS:
Rockey, Milnamow & Katz, Ltd.
Two Prudential Plaza
180 North Stetson Avenue, Suite 4700
Chicago, Illinois 60601
(312) 616-5400

FEE AMOUNT: Total Fee (37 CFR 3.41) $40.00

- ☒ Enclosed
- ☐ Charge to Deposit Account 04-1644
- ☒ The Commissioner is hereby authorized to charge any additional fees which may be required, or credit any overpayment, to Deposit Account 04-1644.

STATEMENT AND SIGNATURE

To the best of my knowledge and belief, the foregoing information is true and correct and any attached copy is a true copy of the original document. Charges to deposit account are authorized, as herein indicated.

Allen J. Hoover — Name of Person Signing
Allen J. Hoover — Signature
May 30, 2000 — Date

CONVEYING PARTIES: (Last Name First)

	Execution Date
Zhou, Sihui	May 16, 2000
Lam, Alex Chun Kit	May 16, 2000

RECEIVED
AUG 1 6 2005
OFFICE OF PETITIONS

RECEIVING PARTY:

Name:	Macquarie University
Address:	Balaclava Road
City:	North Ryde
State, Country:	New South Wales, Australia
Postal Code:	2113

RECEIVED
JUL 2 5 2005
OFFICE OF PETITIONS

Attorney's Docket No. _____

PATENT

For: ☐ U.S. and/or ☐ Foreign Rights
For: ☐ U.S. Application or
☐ U.S. Provisional Application
For: ☐ U.S. Patent
For: ☐ PCT Application
By: Multiple Inventors

RECEIVED
JUL 2 5 2005
OFFICE OF PETITIONS

ASSIGNMENT OF INVENTION (MULTIPLE INVENTORS)

In consideration of the payment by ASSIGNEE to ASSIGNOR of the sum of One Dollar ($1.00), the receipt of which is hereby acknowledged, and for other good and valuable consideration,

RECEIVED
AUG 1 6 2005
OFFICE OF PETITIONS

ASSIGNORS (inventors):

(type or print name of inventors)	Nationality	Address
Andrew Frederick MYLES	an Australian citizen of	5/8 Tuckwell Place, North Ryde, New South Wales, 2113, AUSTRALIA
David James SKELLERN	an Australian citizen of	33 Dudley Avenue, Roseville, New South Wales, 2069, AUSTRALIA
John Fraser DEANE	an Australian citizen of	9 Clive Road, Eastwood, New South Wales, 2122, AUSTRALIA
Terence Michael Paul PERCIVAL	an Australian citizen of	3 Lawn Avenue, Lane Cove, New South Wales, 2066, AUSTRALIA
Sihui ZHOU	an Australian citizen of	239 River Avenue, Carramar, New South Wales, 2163, AUSTRALIA
Alex Chan Kit LAM	an Australian citizen of	144 Ryde Road, Pymble, New South Wales, 2073, AUSTRALIA

hereby sells, assigns and transfers to

ASSIGNEE:
Commonwealth Scientific and Industrial Research Organisation of Limestone Avenue, Campbell,
(type or print name of ASSIGNEE) Address

Approved-T.H. 8/25/08

a body corporate constituted by the Science and Industry Research Act 1949 of the Commonwealth of Australia Australian Capital Territory 2612, AUSTRALIA
Nationality

RECEIVED

Approved-T.H. 8/25/08

AUG 16 2005

ASSIGNEE:
Macquarie University a body corporate established by of Balaclava Road, North Ryde,
(type or print name of ASSIGNEE) Address

OFFICE OF PETITIONS

Macquarie University Act 1989 (as amended) (NSW)
Nationality New South Wales 2113, AUSTRALIA

RECEIVED

JUL 25 2005

and the successors, assigns and legal representatives of the ASSIGNEE

OFFICE OF PETITIONS

(complete one of the following)

☐ the entire right, title and interest

☐ an undivided _____ percent (____ %) interest

for the United States and its territorial possessions

(check the following box, if foreign rights are also to be assigned)

☐ and in all foreign countries, including all rights to claim priority in and to any and all improvements which are disclosed in the invention entitled:

_____

(check and complete (a), (b), (c), (d), (e), (f), or (g))

and which is found in

(a) ☐ U.S. patent application executed on even date herewith

(b) ☐ U.S. patent application executed on _____

(c) ☐ U.S. provisional application naming the above inventor(s) for the above-entitled invention

☐ Express mail label no.: _____

Mailed: _____

☐ To comply with 37 CFR 3.21 for recordal of this assignment, I, an ASSIGNOR signing below, hereby authorize and request my attorney to insert below the filing date and application number when they become known.

(d) ☐ U.S. application no. / _____ filed on _____

(e) ☒ International application no. PCT / AU98 / 00785 filed on 18 September 1998

(f) ☐ U.S. patent no. _____ issued _____

☐ A change of address to which correspondence is to be sent regarding patent maintenance fees is being sent separately.

(check (g), if foreign application(s) is also being assigned)

(g) ☐ and any legal equivalent thereof in a foreign country, including the right to claim priority

and, in and to, all Letters Patent to be obtained for said invention by the above application or any continuation, division, renewal, or substitute thereof, and as to letters patent any reissue or re-examination thereof

ASSIGNOR hereby covenants that no assignment, sale, agreement or encumbrance has been or will be made or entered into which would conflict with this assignment:

ASSIGNOR further covenants that ASSIGNEE will, upon its request, be provided promptly with all pertinent facts and documents relating to said invention and said Letters Patent and legal equivalents as may be known and accessible to ASSIGNOR and will testify as to the same in any interference, litigation or proceeding related thereto and will promptly execute and deliver to ASSIGNEE or its legal representatives any and all papers, instruments or affidavits required to apply for, obtain, maintain, issue and enforce said application, said invention and said Letters Patent and said equivalents thereof which may be necessary or desirable to carry out the purposes thereof.

IN WITNESS WHEREOF, We have hereunto set hand and seal this 16 MAY 00

(Date of signing)

WARNING: *The date of signing must be the same as the date of execution of the application, if item (8) was checked above.*

(type name of inventor)	Signature of INVENTOR
Andrew Frederick MYLES	
David James SKELLERN	
John Fraser DEANE	
Terence Michael Paul PERCIVAL	
Sihui ZHOU	
Alex ~~Chan~~ Chun Kit LAM ACKLi	

RECEIVED
AUG 1 6 2005
OFFICE OF PETITIONS

☐ Notarization or Legalization Page Added.

NOTE: No witnessing, notarization or legalization is necessary. If the assignment is notarized or legalized then it will only be prima facie evidence of execution. 35 USC 261. Use next page if notarization is desired.

OIPE JC112
JUL 19 2005
PATENT & TRADEMARK OFFICE

********** -COMM. JOURNAL- ********** DATE JUL-19-2005 ***** TIME 11:11 ********

MODE = MEMORY TRANSMISSION START=JUL-19 11:08 END=JUL-19 11:11

FILE NO.=291

STN NO.	COMM.	ONE-TOUCH/ ABBR NO.	STATION NAME/TEL NO.	PAGES	DURATION
001	OK		2#273#17033065995	009/009	00:02:29

-Wood, Phillips -

********** -13128762048 - ***** - - *********

WOOD, PHILLIPS, KATZ, CLARK & MORTIMER
500 West Madison Street, Suite 3800
Chicago, Illinois 60661-2511
Telephone (312) 876-1800
Facsimile (312) 876-2020

RECEIVED
JUL 25 2005
OFFICE OF PETITIONS

Date: July 19, 2005

To: Assignment Services Division,
U.S. Patent and Trademark Office
Facsimile No.: (703) 306-5995

From: Allen J. Hoover
Reg. No. 24,103
Direct Phone (312) 876-2107
E-Mail AJHOOVER @ WOODPHILLIPS.COM

Re: Assignment Notice Correction
Re: U.S. Patent No. 6,879,579, issued April 12, 2005
Our Docket No.: SPR4388P0110US

Please refer to the circled portions of the notice compared to the circled portions of the assignment transmittal sheet and assignment documents.

Specifically, the notice fails to include the second assignee, Macquarie University. Appropriate correction is requested.

Allen J. Hoover

THE MESSAGE TRANSMITTED UNDER THIS COVER IS INTENDED FOR THE NAMED RECIPIENT ONLY, AND MAY CONTAIN BUSINESS CONFIDENTIAL INFORMATION, OR INFORMATION SUBJECT TO ATTORNEY-CLIENT PRIVILEGE, OR ATTORNEY WORK PRODUCT IMMUNITY. IN THE EVENT THIS MESSAGE IS RECEIVED AT A LOCATION WHERE IT CANNOT BE CONVEYED TO THE NAMED RECIPIENT, KINDLY NOTIFY THE SENDER IMMEDIATELY BY TELEPHONE/FACSIMILE (IF LONG DISTANCE, PLEASE CALL COLLECT), AND RETURN THE RECEIVED MESSAGE TO US BY MAIL.

SPE RESPONSE FOR CERTIFICATE OF CORRECTION

Paper No.:20080825

DATE : March 08, 2008

TO SPE OF : ART UNIT

SUBJECT : Request for Certificate of Correction on Patent No.:

A response is requested with respect to the accompanying request for a certificate of correction.

Please complete this form and return with file, within **7** days to:
Certificates of Correction Branch - ST (South Tower) 9A22
Palm location **7590** - Tel. No. (703) 305-8309

With respect to the change(s) requested, correcting Office and/or Applicant's errors, should the patent read as shown in the certificate of correction? No new matter should be introduced, nor should the scope or meaning of the claims be changed.

Thank You For Your Assistance **Certificates of Correction Branch**

The request for issuing the above-identified correction(s) is hereby:

Note your decision on the appropriated box.

☒ **Approved** All changes apply.

☐ **Approved in Part** Specify below which changes **do not** apply.

☐ **Denied** State the reasons for denial below.

Comments:

/Chi H Pham/
Supervisory Patent Examiner, Art Unit 2616

SPE RESPONSE FOR CERTIFICATE OF CORRECTION

Paper No.: _____

DATE : March 3, 2008

TO SPE OF : ART UNIT 2616 ~~3752~~

SUBJECT : Request for Certificate of Correction for Appl. No.09/508758patent no.6789579

Please respond to this request for a certificate of correction within 7 days.

Please review the requested changes/corrections as shown in the **COCIN** document(s) in the IFW application image. No new matter should be introduced, nor should the scope or meaning of the claims be changed.

Please complete the response (see below) and forward the completed response to scanning using document code **COCX**.

Magdalene Talley

Certificates of Correction Branch

703-308-9390 ext. 116

Thank You For Your Assistance

The request for issuing the above-identified correction(s) is hereby:

Note your decision on the appropriate box.

- ☒ **Approved** — **All** changes apply.
- ☐ **Approved in Part** — Specify below which changes **do not** apply.
- ☐ **Denied** — State the reasons for denial below.

Comments: _____

SPE _____ Art Unit _____

UNITED STATES PATENT
AND TRADEMARK OFFICE

Commissioner for Patents
United States Patent and Trademark Office
P.O. Box 1450
Alexandria, VA 22313-1450
www.uspto.g

Date Mailed: March 23, 2009
Patent No. :6,879,579 B1
Ser. No. :09/508758
Inventor(s) :Andrew Frederick Myles, et al.
Title : MEDIUM ACCESS CONTROL PROTOCOL FOR DATA COMMUNICATIONS

Request for Certificate of Correction

Consideration has been given your request for the issuance of a certificate of correction for the above-identified patent under the provisions of Rule(s) 1.322 and/or 1.323.

Assignees' names and addresses (assignment data) printed in a patent, are based *solely* on information supplied in the appropriate space for identifying the assignment data, i.e., item 3 of the Issue Fee Transmittal Form PTOL-85B. Granting of a request under 37 CFR 3.81(b) is required to correct applicant's error providing ***incorrect or erroneous*** assignment data, *before* issuance of a Certificate of Correction, under 37 CFR 1.323 *(see Manual of Patent Examining Procedures (M.P.E.P) Chp.1400, sect. 1481).* This procedure is required *at any time after the issue fee is paid*, including after issuance of the patent.

In view of the foregoing, your request is hereby denied.

A request to correct the Assignee under 37 CFR 3.81(b) should include:

A. **the processing fee set forth in 37 CFR 1.117(h) (currently $130);**
B. a statement that the failure to include the correct assignee name on the PTOL-85B was inadvertent; and
C. a copy of the Notice of Recordation of Assignment Document, reflecting the reel and frame number where the assignment(s) is recorded and/or reflecting proof of *the date* the assignment was submitted for recordation.

In the Request, Applicant(s) may request that the file be forwarded to Certificates of Correction Branch, for issuance of a Certificate of Correction, if the Request is granted.

Any request under 37 CFR 3.81(b) should be directed to the following address or facsimile number:

By mail: Mail Stop PETITIONS
Commissioner for Patents
Post Office Box 1450
Alexandria, VA 22313-1450

By hand: Customer Service Window
Mail Stop Petitions
Randolph Building
401 Dulany Street
Alexandria, VA 22314

By fax: (571) 273-0025
ATTN: Office of Petitions

If a fee (currently $100) was previously submitted for consideration of a Request for Certificate of Correction, under CFR 1.323, to correct assignment data, no additional fee is required.

Magdalene Talley
For Mary F. Diggs, Supervisor
Decisions & Certificates
of Correction Branch
(703) 308-9390 ext. 116

Woods, Phillips, Katz, Clark & Mortimer
500 W. Madison Street-Ste. 3800
Chicago, IL 60661-2511

MD/mt

UNITED STATES PATENT AND TRADEMARK OFFICE

COMMISSIONER FOR PATENTS
UNITED STATES PATENT AND TRADEMARK OFFICE
WASHINGTON, D.C. 20231
www.uspto.gov

MAR 25 2002

Stephen A. Bent
FOLEY & LARDNER
3000 K Street, N.W., Suite 500
Washington, D.C. 20007-5109

Paper No. 12

In re Application of	:
Suzanne CORY et al	: DECISION GRANTING PETITION
Application No. 09/508,832	: TO RESET PERIOD FOR REPLY
Filed: July 10, 2000	:
Attorney Docket No. 017227/0159	

This is a decision on the petition filed on January 24, 2002, requesting that the shortened statutory period for reply set forth in the Office communication mailed on December 14, 2001 be reset to run from the date on which the Office communication was actually received at the correspondence address of record.

The petition is granted.

Petitioner provided a statement that the Office communication in question was received at the correspondence address of record on January 16, 2002. The petition was filed within two weeks of receipt of the Office communication. A substantial portion of the set reply period had elapsed on the date of receipt. Furthermore, the Office communication was mailed between October 13, 2001 and January 2, 2002, when delivery of mail from the Office to certain regions of the country was delayed.

Accordingly, the shortened statutory period that was originally set forth in the Office communication originally mailed on December 14, 2001 is hereby reset to run FROM THE RECEIPT DATE OF January 16, 2002.

Cecilia Tsang

Cecilia Tsang, Special Program Examiner
Technology Center 1600
(703) 308-0254

UNITED STATES
PATENT AND
TRADEMARK OFFICE

UNDER SECRETARY OF COMMERCE FOR INTELLECTUAL PROPERTY
AND DIRECTOR OF THE UNITED STATES PATENT AND TRADEMARK OFFICE
WASHINGTON, D.C. 20231
WWW.USPTO.GOV

DEC 12 2002

#17

FOLEY & LARDNER
3000 K STREET NW SUITE 500
PO BOX 25696
WASHINGTON, DC 20007-8696

In re Application of Suzanne Cory et al.	:
Serial No.: 09/508,832	:
Filed: July 10, 2000	: PETITION DECISION
Attorney Docket No.: 017227/0159	:

This is in response to applicants' petition, filed October 11, 2002 under 37 CFR 1.181, which is being treated as a petition under 37 CFR 1.144, requesting withdrawal of the restriction requirement set forth by the examiner.

BACKGROUND

A review of the file history shows that this application was filed under 35 U.S.C. 371 as the National Stage of PCT/AU98/00772, filed September 17, 1998, which claims priority to Australian applications PO 9263 and PO 9373, filed September 17, 1997 and September 24, 1997, respectively. The application, as filed, contained claims 1-61. In a first Office action mailed December 14, 2001, the examiner set forth a restriction / lack of unity requirement under 35 U.S.C. 121 and 372 dividing the claims into 22 groups.

In the response filed July 16, 2002, applicants elected Group V, drawn to nucleic acid molecules encoding a polypeptide having one or more identifying characteristics of SEQ ID No: 10 or a derivative or homologue thereof having the ability to cause apoptosis. Applicants also amended the claims, attempting to overcome the prior art cited in the restriction requirement. Applicants traversed the restriction on essentially the same grounds presented in the instant petition.

On August 23, 2002 a second examiner mailed a first Office action on the merits. The restriction requirement was made final.

DISCUSSION

In the petition, Applicants argue that the protein claims, as drawn to a polypeptide having one or more identifying characteristics of SEQ ID No: 10 or a derivative or homologue thereof having the ability to cause apoptosis, should be examined together with the elected nucleic acids, citing Example 17 of Annex B of the PCT administrative instructions. This argument is not persuasive because the pending claims are not in the form presented in the cited example. Example 17 relates to a single protein and the nucleic acids which encode it. The pending claims are not

limited to SEQ ID NO: 10. As noted by the first examiner in the restriction requirement, the specification defines "derivatives" to include fragments, parts, portions, chemical equivalents, mutants and homologues. "Mutant" and "homologue" are not defined in the specification. The second examiner points out in the first action on the merits that the specification does not disclose what portion of SEQ ID NO: 10 causes apoptosis. Thus the claims of Group X are drawn to an ill-defined group of proteins, described chiefly by a functional characteristic rather than a common structure. Since the fact situation is not analogous to Example 17, the conclusion drawn in that example does not apply. Applicants further argue that the prior art cited against claim 1 does not encode a protein similar to SEQ ID NO: 10. This argument is not persuasive. As demonstrated in the discussion above, the claims encompass many nucleic acid sequences encoding proteins which need not be closely related to SEQ ID NO: 10. That the claims as written are not free of the prior art is further evidence that the different groups lack a special technical feature.

Applicants argue that all of the claimed nucleotide sequences should be searched, citing MPEP 803.04. This argument is not persuasive.

MPEP 803.04 states, in part:

> Nucleotide sequences encoding different proteins are structurally distinct chemical compounds and are unrelated to one another. These sequences are thus deemed to normally constitute independent and distinct inventions within the meaning of 35 U.S.C. 121. Absent evidence to the contrary, each such nucleotide sequence is presumed to represent an independent and distinct invention, subject to a restriction requirement pursuant to 35 U.S.C. 121 and 37 CFR 1.141 et seq.
>
> In some exceptional cases, the complex nature of the claimed material, for example a protein amino acid sequence reciting three dimensional folds, may necessitate that the reasonable number of sequences to be selected be less than ten.
>
> Examples of typical nucleotide sequence claims impacted by the partial waiver of 37 CFR 1.141 et seq. (and the partial waiver of 37 CFR 1.475 and 1.499 et seq., see MPEP § 1850) include:
>
> (A) an isolated and purified DNA fragment comprising DNA having at least 95% identity to a DNA sequence selected from SEQ ID Nos. 1-1,000;
>
> (B) a combination of DNA fragments comprising SEQ ID Nos. 1-1,000; and
>
> (C) a combination of DNA fragments, said combination containing at least thirty different DNA fragments selected from SEQ ID Nos. 1-1,000.

The pending claims are not limited to claims of the types shown as examples subject to the partial waiver of 37 CFR 1.141, so therefore the exceptions to typical restriction practice set forth in MPEP 803.04 do not apply. Since nucleotide sequences encoding different proteins are recognized as independent and distinct inventions, the restriction requirement is proper.

Applicants argue that Group X should be rejoined with Groups VI-IX. These 5 groups are drawn to proteins. Since applicants have already elected, and received an Office action on, an invention drawn to nucleic acids, this issue is moot.

Applicants argue that restriction of Groups XI-XXII is improper under "the *Ochiai* guidelines." This argument is not persuasive. The Office's practice in view of the *Ochiai* decision is to rejoin

"process of using" claims once a product is found allowable. Restriction is not prohibited. Applicants are referred to MPEP 821.04 for further information on rejoinder of process claims.

DECISION

Applicants's petition is **DENIED** for the reasons set forth above.

The time period for filing a response to the outstanding Office action continues to run from the date of its mailing, August 23, 2002.

Any request for reconsideration or review of this decision must be made by a renewed petition and must be filed within TWO MONTHS of the mailing date of this decision in order to be considered timely.

Should there be any questions with regard to this letter please contact Bruce Campell by letter addressed to the Director, Technology Center 1600, Washington, DC 20231, or by telephone at (703) 308-4205 or by facsimile transmission at (703) 746-5006.

Jasemine C. Chambers

Jasemine Chambers
Director, Technology Center 1600

#20

UNITED STATES
PATENT AND
TRADEMARK OFFICE

UNDER SECRETARY OF COMMERCE FOR INTELLECTUAL PROPERTY AND
DIRECTOR OF THE UNITED STATES PATENT AND TRADEMARK OFFICE
PO Box 1450 Alexandria VA 22313-1450
WWW.USPTO.GOV

OCT 20 2003

FOLEY & LARDNER
3000 K. STREET N.W. SUITE 500
P.O. BOX 25696
WASHINGTON D.C. 20007-8696

In re Application of	:
Cory et al	:
Serial No.: 09/508,832	: Decision on Petition
Filing Date: 10 July 2000	:
Attorney Docket No. 017227/0159	:

This letter is in response to the Petition filed 12 February 2003, requesting reconsideration of the decision on applicants' petition under 37 CFR 1.144, mailed 12 December 2002. The delay in acting upon this petition is regretted.

BACKGROUND

The prosecution history for this application filed under 35 USC 371 has been reviewed in the previous petition decision and will not be repeated here.

On 12 April 2003, Applicants filed an amendment to cancel claims 1-5, 10-14, 23-27, 31-35, 37-61 and to amend claims 6-9, 15-22, 28 and 29. Claims 6-9, 15-22, 28-30, 36 are all pending and, as amended, are directed either to the elected invention, nucleic acid SEQ ID No. 9, encoding SEQ ID No. 10 (claims 6-9, 21-22, 28) or to the non-elected invention, protein having SEQ ID No. 10 (claims 15-20, 29-30 and 36).

DISCUSSION

The file record, Restriction Requirement, first petition and its decision, and the second petition have been considered carefully.

In Part (A), the petition requests withdrawal of the restriction requirement between Group X, polynucleotides encoding SEQ ID No. 10 and Group V, polypeptides of SEQ ID No. 10. Applicants correctly point out that the polynucleotide claims, as presently amended, are considered free of the prior art by the examiner. Applicants go on to argue that Groups V and X are therefore linked by a special technical feature. A review of these claims show that they do not conform to the format of claims accepted unity the PCT Administrative Instructions, Unity of Inventions, Example 17.

PCT Rule 13.2 requires (1) that the groups be linked by a same or corresponding technical feature and (2) that the technical feature defines a contribution over the prior art.

DNA and protein are made up of different subunits (nucleic versus amino acids) and perform different functions (transcription and replication versus a protein's activity) and thus do not share the "same technical feature". Example 17 of the PCT Administrative Instructions sets forth one situation in which DNA and protein claims may share a corresponding technical feature. Example 17 allows for unity between protein molecule X and DNA that encodes protein X. In Example 17, the claimed subject matter is linked by a one-to-one correspondence, in view of the fact that the protein is encoded by the DNA and the DNA encodes the protein. Example 17 allows for multiple DNA sequences to be claimed with one protein sequence, in order to compensate for the degenerative nature of the DNA codon usage, whereby that one protein may be encoded by multiple DNA sequences.

Turning now to the claims in this application, the protein claim is broader than one protein species: a wide variety of protein molecules are claimed by the limitations of "sequence having at least about 45% identity to SEQ ID No. 10" (see Claim 15, for example). The DNA which encodes one of those protein molecules would not encode the others. Similarity the instant DNA molecules are also claimed broadly. The nucleic acid molecules of Group V's Claim 7, for example, is not required to encode a protein having SEQ ID No. 10. Thus the protein and DNA inventions do not share a corresponding technical feature and unity is lacking. The fact that the polynucleotide claims are considered free of the prior art does not alter this position. PCT Rule 13.2 requires, first, that the claims share a technical feature.

The Petition argues that the Commissioner's 1996 pronouncement accommodates a reasonable number of sequences. The Official Gazette Notice set forth situations in which multiple polynucleotides may be examined together. The Official Gazette Notice is silent concerning the concurrent examination of DNA and protein.

In Part (B), the petition requests that Groups I-IV, polynucleotides encoding SEQ ID Nos. 2, 4, 6 and 8 be examined together with the elected invention, Group V, polynucleotides encoding SEQ ID No. 10. This request is moot since no claims are pending that recite the non-elected inventions Groups I-IV. Applicants are requesting rejoinder of inventions that have been canceled from the application.

DECISION

The petition is **DENIED** for the reasons set forth above.

The application is being sent back to the examiner for consideration of the amendment and response filed 21 April 2003 and completion of an Office action of the elected invention, claims 6-9, 21-22 and 28.

Any request for reconsideration of this decision must be made by a renewed petition and must be filed within TWO MONTHS of the mailing date of this decision in order to be considered timely.

Should there be any questions with regard to this letter, please contact Special Program Examiner Julie Burke by letter addressed to the Director, Technology Center 1600, P.O. Box 1450, Alexandria VA 22313-1450 or by telephone at (703) 308-7553 or by facsimile transmission at (703) 305-7230.

Jasemine C. Chambers

Jasemine Chambers
TC1600 Group Director

UNITED STATES PATENT AND TRADEMARK OFFICE

Commissioner for Patents
United States Patent and Trademark Office
P.O. Box 1450
Alexandria, VA 22313-1450
www.uspto.gov

BIRCH STEWART KOLASCH & BIRCH, LLP
PO BOX 747
FALLS CHURCH, VA 22040-0747

COPY MAILED

FEB 07 2007

OFFICE OF PETITIONS

In re Patent No. 6,951,919	:	
Issue Date: October 4, 2005	:	
Application No. 09/508,849	:	ON PETITION
Filed: March 17, 2000	:	
Attorney Docket No. 1110-266PCT	:	

This is a decision on the petition filed December 23, 2005, which is being treated as a petition under 37 CFR 3.81(b)[1] to add assignee's name on the front page of the above-identified patent by way of a Certificate of Correction.

The petition is **granted.**

Telephone inquiries concerning this matter may be directed to the undersigned at (571) 272-3210. Any questions concerning the issuance of the Certificate of Correction should be directed to the Certificates of Correction Branch at (703) 305-8309.

This application is being forwarded to the Certificates of Correction Branch for issuance of the requested Certificate of Correction.

Irvin Dingle
Petitions Examiner
Office of Petitions

[1] See Official Gazette of June 22, 2004

UNITED STATES PATENT AND TRADEMARK OFFICE

Commissioner for Patents
United States Patent and Trademark Office
P.O. Box 1450
Alexandria, VA 22313-1450
www.uspto.gov

In re Patent No. 6290595
Issue Date: September 18,2001
Application No. 09508887
Filed: March 20,2000
Attorney Docket No. SPI-US-17

:
:DECISION GRANTING PETITION
:UNDER 37 CFR 1.378(c)
:

This is a decision on the electronic petition, filed March 10,2010 ,under 37 CFR 1.378(c) to accept the unintentionally delayed payment of the 7.5 year maintenance fee for the above-identified patent.

The petition is **GRANTED**.

The maintenance fee is accepted, and the above-identified patent reinstated as of March 10,2010 .
This decision also constitutes notice that the fee has been accepted. An electronic copy of the petition and this decision has been created as an entry in the Image File Wrapper. Nevertheless, petitioner should print and retain an independent copy.

Telephone inquiries related to this electronic decision should be directed to the Electronic Business Center at 1-866-217-9197.

PTO/SB/66 (03-09)
Approved for use through 03/31/2012. OMB 0651-0016
U.S. Patent and Trademark Office: U.S. DEPARTMENT OF COMMERCE
Under the Paperwork Reduction Act of 1995, no persons are required to respond to a collection of information unless it displays valid OMB control number.

PETITION TO ACCEPT UNINTENTIONALLY DELAYED PAYMENT OF MAINTENANCE FEE IN AN EXPIRED PATENT (37 CFR 1.378(c))

Patent Number	Issue Date (YYYY-MM-DD)	Application Number	Filing Date (YYYY-MM-DD)	Docket Number (if applicable)
6290595	2001-09-18	09508887	2000-03-20	0502-0005

CAUTION: Maintenance fee (and surcharge, if any) payment must correctly identify: (1) the patent number and (2) the application number of the actual U.S. application leading to issuance of that patent to ensure the fee(s) is/are associated with the correct patent. 37 CFR 1.366(c) and (d).

SMALL ENTITY
☒ Patentee claims, or has previously claimed, small entity status. See 37 CFR 1.27.

LOSS OF ENTITLEMENT TO SMALL ENTITY STATUS
☐ Patentee is no longer entitled to small entity status. See 37 CFR 1.27(g)

NOT Small Entity		Small Entity	
Fee	Code	Fee	Code
○ 3 ½ year	(1551)	○ 3 ½ year	(2551)
○ 7 ½ year	(1552)	◉ 7 ½ year	(2552)
○ 11 ½ year	(1553)	○ 11 ½ year	(2553)

SURCHARGE
The surcharge required by 37 CFR 1.20(i)(2) (Fee Code 1558) must be paid as a condition of accepting unintentionally delayed payment of the maintenance fee.

MAINTENANCE FEE (37 CFR 1.20(e)-(g))
The appropriate maintenance fee must be submitted with this petition.

STATEMENT
THE UNDERSIGNED CERTIFIES THAT THE DELAY IN PAYMENT OF THE MAINTENANCE FEE TO THIS PATENT WAS UNINTENTIONAL

PETITIONER(S) REQUEST THAT THE DELAYED PAYMENT OF THE MAINTENANCE FEE BE ACCEPTED AND THE PATENT REINSTATED

THIS PORTION MUST BE COMPLETED BY THE SIGNATORY OR SIGNATORIES

37 CFR 1.378(d) states: "Any petition under this section must be signed by an attorney or agent registered to practice before the Patent and Trademark Office, or by the patentee, the assignee, or other party in interest."

I certify, in accordance with 37 CFR 1.4(d)(4) that I am

◉ An attorney or agent registered to practice before the Patent and Trademark Office

○ A sole patentee

○ A joint patentee; I certify that I am authorized to sign this submission on behalf of all the other patentees.

○ A joint patentee; all of whom are signing this e-petition

○ The assignee of record of the entire interest

Patent Practitioner			
A signature of the applicant or representative is required in accordance with 37 CFR 1.33 and 10.18. Please see 37 CFR 1.4(d) for the form of the signature			
Signature	/Benoit Castel/	Date (YYYY-MM-DD)	2010-03-10
Name	Benoit Castel	Registration Number	35041

This collection of information is required by 37 CFR 1.378(c). The information is required to obtain or retain a benefit by the public which is to file (and by the USPTO to process) an application. Confidentiality is governed by 35 U.S.C. 122 and 37 CFR 1.11 and 1.14. This collection is estimated to take 1 hour to complete, including gathering, preparing, and submitting the completed application form to the USPTO. Time will vary depending upon the individual case. Any comments on the amount of time you require to complete this form and/ or suggestions for reducing this burden, should be sent to the Chief Information Officer, U.S. Patent and Trademark Office, U.S. Department of Commerce, P.O. Box 1450, Alexandria, VA 22313-1450. DO NOT SEND FEES OR COMPLETED FORMS TO THIS ADDRESS. **This form can only be used when in conjunction with EFS-Web. If this form is mailed to the USPTO, it may cause delays in reinstating the patent.**

Privacy Act Statement

The Privacy Act of 1974 (P.L. 93-579) requires that you be given certain information in connection with your submission of the attached form related to a patent application or patent. Accordingly, pursuant to the requirements of the Act, please be advised that: (1) the general authority for the collection of this information is 35 U.S.C. 2(b)(2); (2) furnishing of the information solicited is voluntary; and (3) the principal purpose for which the information is used by the U.S. Patent and Trademark Office is to process and/or examine your submission related to a patent application or patent. If you do not furnish the requested information, the U.S. Patent and Trademark Office may not be able to process and/or examine your submission, which may result in termination of proceedings or abandonment of the application or expiration of the patent.

The information provided by you in this form will be subject to the following routine uses:

1. The information on this form will be treated confidentially to the extent allowed under the Freedom of Information Act (5 U.S.C. 552) and the Privacy Act (5 U.S.C. 552a). Records from this system of records may be disclosed to the Department of Justice to determine whether the Freedom of Information Act requires disclosure of these records.

2. A record from this system of records may be disclosed, as a routine use, in the course of presenting evidence to a court, magistrate, or administrative tribunal, including disclosures to opposing counsel in the course of settlement negotiations.

3. A record in this system of records may be disclosed, as a routine use, to a Member of Congress submitting a request involving an individual, to whom the record pertains, when the individual has requested assistance from the Member with respect to the subject matter of the record.

4. A record in this system of records may be disclosed, as a routine use, to a contractor of the Agency having need for the information in order to perform a contract. Recipients of information shall be required to comply with the requirements of the Privacy Act of 1974, as amended, pursuant to 5 U.S.C. 552a(m).

5. A record related to an International Application filed under the Patent Cooperation Treaty in this system of records may be disclosed, as a routine use, to the International Bureau of the World Intellectual Property Organization, pursuant to the Patent Cooperation Treaty.

6. A record in this system of records may be disclosed, as a routine use, to another federal agency for purposes of National Security review (35 U.S.C. 181) and for review pursuant to the Atomic Energy Act (42 U.S.C. 218(c)).

7. A record from this system of records may be disclosed, as a routine use, to the Administrator, General Services, or his/her designee, during an inspection of records conducted by GSA as part of that agency's responsibility to recommend improvements in records management practices and programs, under authority of 44 U.S.C. 2904 and 2906. Such disclosure shall be made in accordance with the GSA regulations governing inspection of records for this purpose, and any other relevant (i.e., GSA or Commerce) directive. Such disclosure shall not be used to make determinations about individuals.

8. A record from this system of records may be disclosed, as a routine use, to the public after either publication of the application pursuant to 35 U.S.C. 122(b) or issuance of a patent pursuant to 35 U.S.C. 151. Further, a record may be disclosed, subject to the limitations of 37 CFR 1.14, as a routine use, to the public if the record was filed in an application which became abandoned or in which the proceedings were terminated and which application is referenced by either a published application, an application open to public inspections or an issued patent.

9. A record from this system of records may be disclosed, as a routine use, to a Federal, State, or local law enforcement agency, if the USPTO becomes aware of a violation or potential violation of law or regulation.

UNITEI

Commissioner for Patents
United States Patent and Trademark Office
P. O. Box 1450
Alexandria, VA 22313-1450
www.uspto.gov

Paper No. 30

PILLSBURY WINTHROP LLP
P O BOX 10500
McLEAN, VA 22102

COPY MAILED

SEP 1 0 2003

OFFICE OF PETITIONS

In re Application of	:	
Norman Bryson Roberts et al	:	
Application No. 09/508,923	:	DECISION GRANTING PETITION
Filed: June 19, 2000	:	UNDER 37 CFR 313(c)(2)
Attorney Docket No. PM266300	:	

This is a decision on the petition, filed September 9, 2003, under 37 CFR 1.313(c)(2) to withdraw the above-identified application from issue after payment of the issue fee.

The petition is **GRANTED**.

The above-identified application is withdrawn from issue for consideration of a submission under 37 CFR 1.114 (request for continued examination). See 37 CFR 1.313(c)(2).

Petitioner is advised that the issue fee paid on July 3, 2003 in the above-identified application cannot be refunded. If, however, the above-identified application is again allowed, petitioner may request that it be applied towards the issue fee required by the new Notice of Allowance.[1]

Telephone inquiries should be directed to the undersigned at (703) 305-8680.

Upon receipt of the file in the Office of Petitions, the file will be forwarded to Technology Center AU 1754 for processing of the request for continued examination under 37 CFR 1.114 and for consideration of the concurrently filed amendment and Information Disclosure Statement.

Frances Hicks
Frances Hicks
Petitions Examiner
Office of Petitions
Office of the Deputy Commissioner
for Patent Examination Policy

---

[1] The request to apply the issue fee to the new Notice may be satisfied by completing and returning the new Issue Fee Transmittal Form PTOL-85(b), which includes the following language thereon: "Commissioner for Patents is requested to apply the Issue Fee and Publication Fee (if any) or re-apply any previously paid issue fee to the application identified above." Petitioner is advised that, whether a fee is indicated as being due or not, the Issue Fee Transmittal Form **must** be completed and timely submitted to avoid abandonment. Note the language in bold text on the first page of the Notice of Allowance and Fee(s) Due (PTOL-85).

UNITED STATES PATENT AND TRADEMARK OFFICE

Commissioner for Patents
United States Patent and Trademark Office
P.O. Box 1450
Alexandria, VA 22313-1450
www.uspto.gov

Paper No. 36

PILLSBURY WINTHROP LLP
P O BOX 10500
McLEAN, VA 22102

COPY MAILED
APR 2 8 2004
OFFICE OF PETITIONS

In re Application of
Norman Bryson Roberts et al
Application No. 09/508,923
Filed: June 19, 2000
Attorney Docket No. PM266300

DECISION GRANTING PETITION
UNDER 37 CFR 313(c)(2)

This is a decision on the petition, filed April 27, 2004, under 37 CFR 1.313(c)(2) to withdraw the above-identified application from issue after payment of the issue fee.

The petition is GRANTED.

The above-identified application is withdrawn from issue for consideration of a submission under 37 CFR 1.114 (request for continued examination). See 37 CFR 1.313(c)(2).

Petitioner is advised that the issue fee paid on April 2, 2004 in the above-identified application cannot be refunded. If, however, the above-identified application is again allowed, petitioner may request that it be applied towards the issue fee required by the new Notice of Allowance.[1]

It does not appear, absent benefit of the file record at this time, that the instant petition is signed by an attorney of record. However, in accordance with 37 CFR 1.34(a), the signature of Mr. Paul L. Sharer appearing on the correspondence shall constitute a representation to the United States Patent and Trademark Office that he is authorized to represent the particular party in whose behalf he acts. Since it cannot be determined whether Mr. Sharer has

[1] The request to apply the issue fee to the new Notice may be satisfied by completing and returning the new Issue Fee Transmittal Form PTOL-85(b), which includes the following language thereon: "Commissioner for Patents is requested to apply the Issue Fee and Publication Fee (if any) or re-apply any previously paid issue fee to the application identified above." Petitioner is advised that, whether a fee is indicated as being due or not, the Issue Fee Transmittal Form **must** be completed and timely submitted to avoid abandonment. Note the language in bold text on the first page of the Notice of Allowance and Fee(s) Due (PTOL-85).

ever been appointed as an attorney of record, the change of address filed concurrently with the petition will not be entered at this time. However, if, in fact, Mr. Sharer was never appointed as an attorney of record and Mr. Sharer desires to receive correspondence regarding this file, the appropriate power of attorney documentation must be submitted. A courtesy copy of this decision is being mailed to Mr. Sharer, the petitioner herein. However, until otherwise instructed, all future correspondence regarding this application file will be directed solely to the above-noted correspondence address of record.

The petition was accompanied by a request to change the address of record. However, it appears that the change of address was not signed by an attorney of record. Therefore, the change of address will not be entered. Upon receipt of the application file in the Office of Petitions, the file record will be examined to make a determination as to whether Mr. Paul L. Sharer was ever appointed as an attorney in this application. If so, then the change of address will be entered. A courtesy copy of this decision is being mailed to the petitioner herein. If petitioner is not in fact an attorney of record and it is desired to receive future communications regarding this file, then the appropriate power of attorney documentation should be submitted.

Telephone inquiries should be directed to the undersigned at (703) 305-8680.

Upon receipt of the file in the Office of Petitions, the file will be forwarded to Technology Center AU 1754 for processing of the request for continued examination under 37 CFR 1.114 and for consideration of the concurrently filed Information Disclosure Statement.

Frances Hicks

Frances Hicks
Petitions Examiner
Office of Petitions
Office of the Deputy Commissioner
for Patent Examination Policy

cc:

Intellectual Property Group
Mayer Brown Rowe & Maw LLP
1909 K Street NW
Washington DC 20006-1101

UNITED STATES PATENT AND TRADEMARK OFFICE

Commissioner for Patents
United States Patent and Trademark Office
P.O. Box 1450
Alexandria, VA 22313-1450
www.uspto.gov

MAYER BROWN LLP
P.O. BOX. 2828
CHICAGO IL 60690

COPY MAILED

JAN 04 2010

In re Patent No. 6,926,912	:	
Issue Date: June 19, 2000	:	
Application No. 09/508,923	:	DECISION ON PETITION
Filed: June 19, 2000	:	
Attorney Docket No. 40266300	:	

This is a decision on the petition under 37 CFR 1.182, filed September 22, 2009, requesting issuance of duplicate Letters Patent for the above-identified patent.

The petition is **GRANTED**.

The Office of Data Management is directed to issue duplicate Letters Patent.

As authorized, the $400 fee for the petition under 37 CFR 1.182 has been assessed to petitioner's deposit account.

Telephone inquiries concerning this decision may be directed to Michelle R. Eason at (571) 272-4231. Inquiries regarding the issuance of duplicate Letters Patent may be directed to Niomi Farmer in the Office of Data Management at (703) 756-1556.

A copy of this decision is being faxed to Office of Data Management for issuance of duplicate Letters Patent.

Thurman K. Page
Petitions Examiner
Office of Petitions

cc: Niomi Farmer, Randolph Square, 9th Floor, Room D30-B (Fax No. (571) 270-9753)

NOV 0 8 2001

UNITED STATES PATENT AND TRADEMARK OFFICE

Commissioner for Patents
United States Patent and Trademark Office
Washington, D.C. 20231
www.uspto.gov

James W. McKee
FAY, SHARPE, FAGAN, MINNICH & MCKEE
1100 Superior Avenue, 7th Floor
Cleveland, Ohio 44114-2518

In re Application of	:	
MULLER, Jurgen, et al.	:	
PCT No.: PCT/DE98/02765	:	DECISION ON
U.S. Application No.: 09/508,934	:	PETITION
International Filing Date: 17 September 1998	:	
Priority Date: 17 September 1997	:	
Attorney's Docket No.: TRW 2 256	:	
For: STATOR AND STATOR WINDING METHOD FOR A	:	
BRUSHLESS DIRECT-CURRENT MOTOR	:	

This decision is issued in response to the "Petition For Withdrawal Of Notice Of Abandonment" filed 09 July 2001. No petition fee is required.

BACKGROUND

On 17 September 1998, applicant filed international application PCT/DE98/02765 which claimed a priority date of 17 September 1997 and which designated the United States. On 25 March 1999, a copy of the international application was communicated to the United States Patent and Trademark Office ("USPTO") by the International Bureau ("IB").

On 15 April 1999, a Demand was filed with the International Preliminary Examining Authority electing the United States. As a result, the deadline for payment of the basic national fee was thirty months from the priority date, i.e., 17 March 2000.

On 17 March 2000, applicant filed a transmittal letter for entry into the national stage in the United States accompanied by, among other materials, payment of the basic national fee.

On 08 May 2000, the United States Designated/Elected Office (DO/EO/US) mailed a Notification Of Missing Requirements (Form PCT/DO/EO/905) indicating that applicant was required to submit an executed oath or declaration in compliance with 37 CFR 1.497 and the $130 surcharge for filing the oath or declaration later than thirty months after the priority date. The Notification also informed applicant that the failure to submit these materials within one month of the date of the Notification would result in abandonment of the application.

On 29 May 2001, the DO/EO/US mailed a Notification Of Abandonment (Form PCT/DO/EO/909) indicating that the application is abandoned with respect to the United States for failure to properly respond to the Notification Of Missing Requirements.

On 09 July 2001, applicant filed the petition considered herein. The petition asserts that applicants submitted a timely and proper response to the Notification Of Missing Requirements on 02 June 2000. Attached to the petition is a copy of the response, including an executed declaration, and a copy of a return postcard itemizing these materials and bearing a USPTO receipt stamp dated 02 June 2000.

DISCUSSION

Based on applicants' statements, the stamped return postcard, and internal USPTO records which confirm receipt of the $130 surcharge payment on 02 June 2000, it is concluded that the "Response To Notification Of Missing Requirements" attached to the present petition, including the executed declaration and the surcharge payment, were originally filed on 02 June 2000 as a timely response to the Notification Of Missing Requirements mailed 08 May 2000. Accordingly, the Notification Of Abandonment mailed on 29 May 2001, based as it was on applicants' purported failure to file a timely response to the Notification Of Missing Requirements, is appropriately vacated.

A review of the declaration filed on 02 June 2000 reveals that it is in compliance with 37 CFR 1.497.

CONCLUSION

Applicants' "Petition For Withdrawal Of Notice Of Abandonment" is **GRANTED**.

The Notification Of Abandonment (Form PCT/DO/EO/909) mailed on 29 May 2001 is hereby **VACATED**.

The "Response To Notification Of Missing Requirements" attached to the present petition, including the executed declaration and the surcharge payment, are treated as having been originally filed on 02 June 2000

This application is being forwarded to the National Stage Processing Branch of the Office of PCT Operations for further processing in accordance with this decision. The 35 U.S.C. 371(c) date is 02 June 2000.

Richard Cole
PCT Legal Examiner
PCT Legal Office

Richard M. Ross
PCT Petitions Attorney
PCT Legal Office
Telephone: (703) 308-6155
Facsimile: (703) 308-6459

RMR/RC:rmr

UNITED STATES PATENT AND TRADEMARK OFFICE

COMMISSIONER FOR PATENTS
UNITED STATES PATENT AND TRADEMARK OFFICE
P.O. BOX 1450
ALEXANDRIA, VA 22313-1450
www.uspto.gov

James W McKee
Fay Sharpe Fagan Minnich & McKee
7th Floor
1100 Superior Avenue
Cleveland OH 44114-2518

COPY MAILED
NOV 1 8 2005
OFFICE OF PETITIONS

In re Application of :
Muller et al. :
Application No. 09/508,934 : Decision on Petition for
International Filing Date: September 17, 1998 : Patent Term Extension
For: STATOR WINDING METHOD FOR A :
BRUSHLESS DIRECT-CURRENT MOTOR :

The above-identified application has been forwarded to the undersigned for consideration on a petition for patent term adjustment entitled "Request for Reconsideration of Patent Term Extension Indicated in Notice of Allowance and Not Indicated in Supplemental Notice of Allowance." In the alternative, the petition is being treated as a petition for corrected patent term extension under 37 CFR 1.701 and 37 CFR 1.181. See 35 U.S.C. § 154(b)[1] and 37 CFR § 1.701.

The petition under 37 CFR 1.705 is dismissed.

The petition under 37 CFR 1.181 is dismissed.

Petitioner notes that the Supplemental Notice of Allowance mailed on December 21, 2004 for the above-identified application did not contain an indication of paten term extension under 35 U.S.C. §154(b). Petitioner contends that "in accordance with 37 CFR 1.702(a)(4) "the term of an original patent shall be adjusted if issuance of the patent was delayed due to failure of the Office to issue a patent not later than four (4) months after the date on which the issue fee was paid under 35 U.S.C. § 151 and all outstanding requirements were satisfied. Petitioner contends that the issue fee was paid on June 11, 2004 and accordingly, a patent should have issued on October 11, 2004.

35 U.S.C. § 154(b)(as amended by the "Uruguay Round Agreements Act," enacted December 8, 1994, as part of Public Law 103-465) provides for patent term extension for appellate review, interference and secrecy order delays in applications filed on or after June 8, 1995 and before May 29, 2000.

[1] 35 U.S.C. § 154 was amended by the "American Inventors Protection Act of 1999," which was enacted on November 29, 1999 as part of Public Law 106-113 (Consolidated Appropriations Act for Fiscal Year 2000). Since this amendment is effective May 29, 2000 and applies to applications filed on or after that date, the prior patent term adjustment provisions of 35 U.S.C. § 154 continue to apply to the above-identified application.

35 U.S.C. § 154(b)(as amended by the "American Inventors Protection Act of 1999," enacted November 29, 1999, as part of Public Law 106-113) provides for patent term adjustment for these administrative delays and others in applications filed on or after May 29, 2000.

Petitioner styles the instant petition as a petition for patent term extension, however, petitioner argues for patent term adjustment under the provisions of 37 CFR 1.702. Petitioner argues that he is entitled to patent term adjustment based on 37 CFR 1.702(a)(4), 37 CFR 1.702 is a patent term adjustment provision for applications filed on or after May 29, 2000. The above-identified application was filed on September 17, 1998, which is before May 29, 2000 and, as a result, is entitled to patent term extension based upon the conditions in 35 U.S.C. § 154(b), in effect on June 8, 1995. The patent term adjustment provisions of 35 U.S.C. § 154(b) in effect on May 29, 2000 do not apply, because the amended version of 35 U.S.C. § 154(b) only applies to applications filed on or after May 29, 2000. Pursuant to 35 U.S.C. § 154(b), in effect on June 8, 1995, the application is not entitled to patent term extension under 37 CFR 1.701, as there was not a successful appeal, interference or a secrecy order. The Office has no authority to grant an extension of the term due to administrative delays except as authorized by 35 U.S.C. § 154.

After mailing of this decision, the above-identified application will be forwarded to the Office of Publications.

The rules and statutory provisions governing the operations of the U.S. Patent and Trademark Office require payment of a fee on filing each petition. *See* 35 U.S.C. § 41(a)(7). Accordingly, as authorized the required $200 fee for the petition under 37 CFR 1.705(b) has been charged to Petitioner's Deposit Account (06-0308). The petition fee under 37 CFR 1.182 for questions not specifically provided for has not been charged to Petitioner's deposit account.

Telephone inquiries with regard to this communication should be directed to Mark O. Polutta at (571) 272-7709.

Mark O. Polutta
Senior Legal Advisor
Office of Patent Legal Administration
Office of the Deputy Commissioner
for Patent Examination Policy

B/IRW

OIPE JC32
FEB 0 1 2005
PATENT & TRADEMARK OFFICE

PATENT

IN THE UNITED STATES PATENT AND TRADEMARK OFFICE

In re application of: MÜLLER, et al.	Examiner: A.D. Tugbang
Serial No.: 09/508,934	Art Unit: 3729
Filed: June 2, 2000	Confirmation No.: 4918
For: **STATOR AND STATOR WINDING METHOD FOR USE WITH BRUSHLESS DIRECT CURRENT MOTORS**	
Date of Last Office Action: November 19, 2003	
Attorney Docket No.: TRWZ 2 00256	Cleveland, Ohio 44114-2518

REQUEST FOR RECONSIDERATION OF PATENT TERM EXTENSION INDICATED IN NOTICE OF ALLOWANCE AND NOT INDICATED IN SUPPLEMENTAL NOTICE OF ALLOWANCE

Mail Stop Issue Fee
Commissioner for Patents
P.O. Box 1450
Alexandria, VA 22313-1450

Dear Sir:

1) This is a request for reconsideration of the Patent Term Extension initially indicated in the Notice of Allowance mailed on April 13, 2004 in view of the Supplemental Notice of Allowance mailed on December 21, 2004.

2) The issue fee was paid on June 11, 2004 in response to the initial Notice of Allowance mailed on April 13, 2004.

3) The Supplemental Notice of Allowance mailed on December 21, 2004, however, does not contain any indication of a Patent Term Extension under 35 U.S.C. § 154(b).

4) In accordance with 37 C.F.R. § 702(a)(4) the term of an original patent shall be adjusted if the issuance of the patent was delayed due to failure of the Office to issue a patent not later than four (4) months after

11/18/2005 AKELLEY 00000001 060308 09508934
Sale Ref: 00000001 DA#: 060308 09508934
01 FC:1455 200.00 DA

the date on which the issue fee was paid under 35 U.S.C. § 151 and all outstanding requirements were satisfied.

5) The issue fee was paid on June 11, 2004 and, accordingly, a patent should have issued on October 11, 2004.

6) Any patent granted on this application is not subject to a terminal disclaimer.

7) As to circumstances during the prosecution of this application constituting a failure to engage in reasonable efforts to conclude processing or examination of this application as set forth in 37 C.F.R. § 704, there were none.

8) No fee is believed to be due. However, if any fee is necessary, authorization is hereby made to charge the amount of $200 to Deposit Account No. 06-0308.

9) Further authorization is hereby made to charge any additional fees required by this paper or credit any overpayment in the manner authorized above.

A duplicate of this paper is attached.

Respectfully submitted,

FAY, SHARPE, FAGAN,
MINNICH & McKEE, LLP

Michael E. Hudzinski

Michael E. Hudzinski
Reg. No. 34,185
1100 Superior Avenue, 7th Floor
Cleveland, OH 44114-2518
(216) 861-5582

N:\TRWZ\200256\bjb0002822V001.doc

Certificate of Mailing

I certify that this paper and accompanying document(s) are being

☒ deposited with the United States Postal Service as First Class mail under 37 C.F.R. 1.8, addressed to: MAIL STOP Issue Fee, Commissioner for Patents, P.O. Box 1450, Alexandria, VA 22313-1450 on the date indicated below.

☐ transmitted to facsimile number (703) 872-9302 under 37 C.F.R. 1.8 on the date indicated below.

☐ deposited with the United States Postal Service "Express Mail Post Office to Addressee" service under 37 C.F.R. 1.10 on the date indicated below and is addressed to: MAIL STOP AMENDMENT FEE, Commissioner For Patents, P.O. Box 1450, Alexandria, VA 22313-1450.

Express Mail Label No.:	Signature
	Barbara Brazier
Date	Printed Name
January 28, 2005	Barbara Brazier

JUN 0 8 2001

UNITED STATES PATENT AND TRADEMARK OFFICE

COMMISSIONER FOR PATENTS
UNITED STATES PATENT AND TRADEMARK OFFICE
WASHINGTON, D.C. 20231
www.uspto.gov

William P. Berridge
Oliff & Berridge, PLC
P.O. Box 19928
Alexandria, Virginia 22320

In re Application of
SANTORO et al.
Application No.: 09/509,006
PCT No.: PCT/IB98/01475
Int. Filing Date: 23 September 1998
Priority Date: 23 September 1997
Attorney Docket No.: 105787
For: LYSIS METHOD FOR MICRO-ORGANISM

DECISION

This decision is in response to applicants' "Response to Notification Regarding Defective Declaration" filed 28 December 2000 and "Status Request Regarding Response to Notification Regarding Defective Declaration" filed 07 March 2001.

BACKGROUND

On 23 September 1998, applicants filed the above-captioned international application, which claimed a priority date of 23 September 1997 and designated the United States. A copy of the international application was communicated to the United States Patent and Trademark Office from the International Bureau on 01 April 1999. The international application named Phillipe Cleuzuat and Lyse Santoro as inventors. A Demand for international preliminary examination was filed prior to 19 months from the priority date. Accordingly, the thirty-month period for paying the basic national fee expired at midnight on 23 March 2000.

On 21 March 2000, applicants filed a transmittal letter for entry into the national stage in the United States which was accompanied by, *inter alia*, a basic national fee of $840, a translation of the international application, and a preliminary amendment.

On 17 July 2000, applicants filed a declaration naming as inventors and signed by Lise Santoro, Sophie Lopez, Colin Bruno, Corinne Jay, Cecile Paris, and Kathleen Ann Clark Dickey.

On 19 December 2000, the PCT Legal Office mailed a "Notification of Defective Declaration and Requirement for New Declaration or Request under 37 CFR 1.497(d)" indicating that the declaration filed on 17 July 2000 was defective under 37 CFR 1.63.

On 28 December 2000, applicant filed "Response to Notification Regarding Defective Declaration" accompanied by Notification De L'Enregistrement D'Un Changement (Request for the Recording of a Change Issued under Rule 92 bis.1).

On 07 March 2001, applicant filed "Status Request Regarding Response to Notification Regarding Defective Declaration"

DISCUSSION

In order to correct an error in naming the inventor(s) made during the international stage in the national stage, a request under 37 CFR 1.497(d) or a showing that a 92bis change was made prior to the National stage filing is required. A review of the papers filed 28 December 2000 reveal that the "Request for the Recording of a Change Issued under Rule 92 bis.1" has been filed indicating that Sophie Lopez, Colin Bruno, Corinne Jay, Kathleen Ann Clark Dickey and Cecile Paris have been added as applicants/inventors and Phillipe Cleuzuat has been deleted as an applicant/inventor prior to entering into the national stage in the United States of America.

CONCLUSION

A review of the application papers reveals that applicant completed all the requirements of 35 U.S.C. 371 for entry into the national stage. This application will be given an international application filing date of 23 September 1998 and a date of **17 July 2000** under 35 U.S.C. 371.

The application is being returned to the United States Designated/Elected Office for further processing in accordance with this decision.

Leonard Smith
PCT Legal Examiner
PCT Legal Office

Anthony Smith
Petition Attorney
PCT Legal Office
Telephone: (703) 308-6314
Facsimile: (703) 308-6459

9 DEC 2000

UNITED STATES PATENT AND TRADEMARK OFFICE

Commissioner for Patents
United States Patent and Trademark Office
Washington, D.C. 20231
www.uspto.gov

William P. Berridge
Oliff & Berridge, PLC
P.O. Box 19928
Alexandria, Virginia 22320

In re Application of SANTORO et al. Application No.: 09/509,006 PCT No.: PCT/IB98/01475 Int. Filing Date: 23 September 1998 Priority Date: 23 September 1997 Attorney Docket No.: 105787 For: LYSIS METHOD FOR MICRO-ORGANISM	:	NOTIFICATION REGARDING DEFECTIVE DECLARATION AND REQUIREMENT FOR NEW DECLARATION OR REQUEST UNDER 37 CFR 1.497(d)

This is to notify applicant that the declaration filed on 17 July 2000 in the above-captioned application is not in compliance with 37 CFR 1.497(a) and that a new declaration or submission under 37 CFR 1.497(d) is required.

BACKGROUND

On 23 September 1998, applicants filed the above-captioned international application, which claimed a priority date of 23 September 1997 and designated the United States. A copy of the international application was communicated to the United States Patent and Trademark Office from the International Bureau on 01 April 1999. The international application named Phillipe Cleuzuat and Lyse Santoro as inventors. A Demand for international preliminary examination was filed prior to 19 months from the priority date. Accordingly, the thirty-month period for paying the basic national fee expired at midnight on 23 March 2000.

On 21 March 2000, applicants filed a transmittal letter for entry into the national stage in the United States which was accompanied by, *inter alia*, a basic national fee of $840, a translation of the international application, and a preliminary amendment.

On 17 July 2000, applicants filed a declaration naming as inventors and signed by Lise Santoro, Sophie Lopez, Colin Bruno, Corinne Jay, Cecile Paris, and Kathleen Ann Clark Dickey.

DISCUSSION

The declaration filed 17 July 2000 is not acceptable. Specifically, the declaration sets forth additional inventors (Sophie Lopez, Colin Bruno, Corinne Jay, and Cecile Paris) who have not been named in the international application. Additionally, the declaration does not include Phillipe Cleuzuat as an inventor.

In that an acceptable declaration of the inventor(s) has not been submitted, the application cannot

be accepted into the national stage at this time.

Applicant must submit either: 1) a submission under 37 CFR 1.497(d) requesting correction of the inventors named in the international application to include Sophie Lopez, Colin Bruno, Corinne Jay, and Cecile Paris and delete Phillipe Cleuzuat, (2) a new declaration naming and signed by only Phillipe Cleuzuat and Lyse Santoro accompanied by an acceptable explanation of the misnaming of the inventor on the present declaration, or (3) a showing that a 92bis change was made prior to the National stage filing. A proper response, as discussed above, must be filed within **ONE (1) MONTH** of the date of mailing of this notification. Extensions of time may be obtained under 37 CFR 1.136(a).

A submission under 37 CFR 1.497(d) to correct an error in naming inventorship requires:

(1) a petition including a statement from each person being added or deleted as an inventor that the error in inventorship occurred without any deceptive intention on his or her part;
(2) an oath or declaration by the actual inventor(s) as required by 37 CFR 1.63;
(3) the fee set forth in 37 CFR 1.17(i); and
(4) if an assignment has been executed by any of the original named inventors, the written consent of the assignee in compliance with 37 CFR 3.73(b).

Any further correspondence with respect to this matter should be addressed to the Assistant Commissioner for Patents, Box PCT, Washington, D.C. 20231, with the contents of the letter marked to the attention of the PCT Legal Office.

Richard Cole
PCT Legal Examiner
PCT Legal Office

Anthony Smith
Petition Attorney
PCT Legal Office
Telephone: (703) 308-6314
Facsimile: (703) 308-6459

UNITED STATES PATENT AND TRADEMARK OFFICE

Commissioner for Patents
United States Patent and Trademark Office
P.O. Box 1450
Alexandria, VA 22313-1450
www.uspto.gov

FOLEY AND LARDNER
SUITE 500
3000 K STREET NW
WASHINGTON, DC 20007

COPY MAILED

MAY 2 4 2004

OFFICE OF PETITIONS

In re Application of	:	
Masayuki Tsuchiya	:	
Application No. 09/509,098	:	ON PETITION
Filed: March 22, 2000	:	
Attorney Docket No. 053466/0274	:	

This is a decision on the petition under 37 CFR 1.137(b), filed April 22, 2004, to revive the above-identified application.

The petition is **GRANTED**.

The two-month period for filing an appeal brief in triplicate (accompanied by the fee required by 37 CFR 1.17(c)), runs from the date of this decision.

The above-identified application became abandoned for failure to reply within the meaning of 37 CFR 1.113 in a timely manner to the final Office action mailed September 26, 2003, which set a shortened statutory period for reply of three (3) months. A reply under 37 CFR 1.113 is limited to an amendment that *prima facie* places the application in condition for allowance or a Notice of Appeal (and appeal fee required by 37 CFR 1.17(b)). Since the amendment submitted does not *prima facie* placing the application in condition for allowance, no Notice of Appeal (and appeal fee) was timely filed. Extensions of time under the provisions of 37 CFR 1.136(a) were obtained. Accordingly, the above-identified application became abandoned on March 27, 2004.

Telephone inquiries concerning this decision should be directed to Wan Laymon at (703) 306-5685.

The application file is being forwarded to Technology Center AU 1642.

Wan Laymon
Petitions Examiner
Office of Petitions
Office of the Deputy Commissioner
for Patent Examination Policy

UNITED STATES DEPARTMENT OF COMMERCE
Patent and Trademark Office

Patent Cooperation Treaty
Legal Office

Address: Assistant Commissioner for Patents
Box PCT
Washington, D.C. 20231

JUN 30 2000

Ivor R. Elrifi
MINTZ, LEVIN, COHN, FERRIS, GLOVSKY
and POPEO, P.C.
One Financial Center
Boston, MA 02111

In re Application of FARMER et al. U.S. Application No. 09/509,159 PCT No.: PCT/US98/07307 Int. Filing Date: 10 April 1998 Priority Date: 18 April 1997 Attorney Docket No. 19374-501 For: TOPICAL USE OF PROBIOTIC BACILLUS SPORES TO PREVENT OR CONTROL MICROBIAL INFECTIONS	DECISION ON PETITION UNDER 37 CFR 1.137(b) AND 37 CFR 1.47(a)

This is a decision on applicants' "PETITION FOR REVIVAL OF AN APPLICATION FOR PATENT ABANDONED UNINTENTIONALLY UNDER CFR 1.137(b)" and the "PETITION UNDER 37 CFR 1.47(a)" filed 22 March 2000 in the above-captioned application. The petition fee under 37 CFR 1.17(m) and 37 CFR1.17(i) have been submitted.

BACKGROUND

On 10 April 1998, applicant filed international application PCT/US98/07307 which claimed a priority date of 18 April 1997 and which designated the United States. A Demand was filed with the International Preliminary Examination Authority prior to the 19th month from the earliest claimed priority date. As a result, the deadline for payment of the basic national fee was to expire 30 months from the priority date, or at midnight on 18 October 1999.

On 22 March 2000, applicant filed a transmittal letter requesting entry into the national stage in the United States, which was accompanied, inter alia, by the basic national fee; a copy of the international application; a declaration executed by Sean Farmer; a small entity statement; a petition under 37 CFR 1.137(b) and the appropriate petition fee; and a petition under 37 CFR 1.47(a) and the appropriate petition fee.

DISCUSSION

A. Petition Under 37 CFR 1.137(b)

A petition under 37 CFR 1.137(b) requesting that the application be revived on the grounds of unintentional abandonment must be accompanied by (1) the required reply, (2) the petition fee required by law, (3) a statement that the "entire delay in filing the required reply from the due date for the reply until

the filing of a grantable petition was unintentional," and (4) any terminal disclaimer and fee required pursuant to 37 CFR 1.137(c).

With regard to Item (1), the proper response was the payment of the basic national fee of $345.00. Since all claims did not satisfy PCT Article 33(1)-(4), Deposit Account No. 50-0311 will charged an additional $297.00, as authorized in the transmittal letter.

As to Item (2), the appropriate petition fee of $605.00 as required by 37 CFR 1.17(m) was submitted.

With regard to Item (3), applicant's statement that "entire delay in filing the 35 U.S.C. 371(c) requirement from their due date until the filing of a grantable petition under 37 CFR 1.137(b) was unintentional" and the prompt filing of the petition satisfies the requirement of 37 CFR 1.137(b)(3).

As to Item (4), the terminal disclaimer is not required since this application was filed after 08 June 1995.

A review of the application file reveals that, with the filing of the present petition and accompanying papers, a proper response has been submitted and all of the requirements of 37 CFR 1.137(b) for revival have been satisfied and revival is therefore appropriate.

B. Petition under 37 CFR 1.47(a)

A petition under 37 CFR 1.47(a) must be accompanied by (a) the fee under 37 CFR 1.17(h), (b) factual proof that the missing joint inventor refuses to execute the application or cannot be reached after diligent effort, (c) a statement of the last known address of the missing inventor, and (d) an oath or declaration by each 37 CFR 1.47(a) applicant on his or her own behalf and on behalf of the non-signing joint inventor. Items (a) and (c) have been satisfied.

Regarding item (b) above, section 409.03(d) of the Manual of Patent Examining Procedure (M.P.E.P.), **Proof of Unavailability or Refusal**, states, in part:

> Where inability to find or reach a non-signing inventor "after diligent effort" is the reason for filing under 37 CFR 1.47, an affidavit or declaration of facts should be submitted that fully describes the exact facts which are relied on to establish that a diligent effort was made.
>
> The fact that a non-signing inventor is on vacation or out of town and is therefore temporarily unavailable to sign the declaration is not an acceptable reason for filing under 37 CFR 1.47. Such a petition will be dismissed as inappropriate.

Applicant has not satisfied Item (b). The statement by the petitioner that "I, Sean Farmer, do hereby state that I have made a diligent attempt to contact Robert J. Mikhail, a co-inventor of the above-referenced application . . . These attempts to contact Mr. Mikhail have been made via U.S. mail and electronic mail (E-mail) to his last known address" is insufficient, standing alone, to establish that inventor Robert J. Mikhail could not be found or reached after diligent effort. Applicants have not provided copies of any documentary evidence that support the finding that inventor, Robert J. Mikhail, could not be found

or reached after diligent effort. A copy of any correspondences mailed and details regarding any telephone calls made or attempted and/or electronic mail communications to secure the signature of inventor Robert J. Mikhail should be addressed in any verified statements provided. Was a complete copy of the application papers (specification, including claims, drawings, and oath or declaration) mailed to the last known address of the non-signing inventor? Were the documents eventually returned, or forwarded to a new address by the postal service? A copy of any envelopes returned as undelivered by the postal service should be provided. The efforts that were made, if any, to secure the signature of Robert J. Mikhail during the filing of the priority document and entry into the national stage in the United States should be specifically addressed. In sum, the statement of the petitioner does not show that a reasonable effort was made to secure the signature of the non-signing inventor. Accordingly, it is inappropriate, to accord the national stage application status under 37 CFR 1.47(a).

Regarding item (d), an oath or declaration by each 37 CFR 1.47(a) applicant on his or her own behalf and on behalf of the non-signing joint inventor has not been furnished as required.

CONCLUSION

The petition under 37 CFR 1.137(b) is **GRANTED**.

The petition under 37 CFR 1.47(a) is **DISMISSED** without prejudice.

If reconsideration on the merits of this petition is desired, a proper response must be filed within **TWO (2) MONTHS** from the mail date of this decision. Any reconsideration request should include a cover letter entitled "Renewed Petition Under 37 CFR 1.47(a)." No additional petition fee is required.

Extensions of time may be obtained under 37 CFR 1.136(a).

Please direct any further correspondence with respect to this matter to the Assistant Commissioner for Patents, Box PCT, Washington, D.C. 20231, and address the contents of the letter to the attention of the Legal Affairs Division of the PCT Legal Office.

Richard Cole
for PCT Legal Examiner
PCT Legal Office

Anthony Smith
Petitions Attorney
PCT Legal Office
Tel.: 703-308-6314
Facsimile: 703-308-6459

1 8 DEC 2002

UNITED STATES PATENT AND TRADEMARK OFFICE

COMMISSIONER FOR PATENTS
UNITED STATES PATENT AND TRADEMARK OFFICE
WASHINGTON, D.C. 20231
www.uspto.gov

Ivor R. Elrifi
MINTZ, LEVIN, COHN, FERRIS, GLOVSKY and POPEO, P.C.
One Financial Center
Boston, MA 02111

In re Application of	:	
FARMER et al.	:	
U.S. Application No. 09/509,159	:	DECISION ON PETITION
PCT No.: PCT/US98/07307	:	
Int. Filing Date: 10 April 1998	:	
Priority Date: 18 April 1997	:	
Attorney Docket No. 19374-501	:	
For: TOPICAL USE OF PROBIOTIC BACILLUS SPORES TO PREVENT OR CONTROL MICROBIAL INFECTIONS:		

This is a decision on applicants' "Petition to Withdraw Holding of Abandonment - Decision on Petition under 37 CFR 1.137(b) and 37 CFR 1.47(a) Not Received" filed 03 May 2002 and 17 July 2002. The papers are being treated as a petition under 37 CFR 1.181 and a renewed petition under 37 CFR 1.47(a).

BACKGROUND

On 10 April 1998, applicants filed international application PCT/US98/07307 which claimed a priority date of 18 April 1997 and which designated the United States. A Demand was filed with the International Preliminary Examination Authority prior to the 19th month from the earliest claimed priority date. As a result, the deadline for payment of the basic national fee was to expire 30 months from the priority date, or at midnight on 18 October 1999.

On 22 March 2000, applicants filed a transmittal letter requesting entry into the national stage in the United States, which was accompanied, inter alia, by the basic national fee; a copy of the international application; a declaration executed by Sean Farmer; a small entity statement; a petition under 37 CFR 1.137(b) and the appropriate petition fee; and a petition under 37 CFR 1.47(a) and the appropriate petition fee.

In a decision dated 30 June 2000, applicants' petition under 37 CFR 1.137(b) was granted and applicants' petition under 37 CFR 1.47(a) was dismissed without prejudice.

On 03 May 2002 and 17 July 2002, applicants filed the present petition.

DISCUSSION

The above-identified application was abandoned for failure to respond to the Decision mailed 30 June 2000.

A. Petition under 37 CFR 1.181

The Official Gazette, at 1156 OG 53, provides that a petition requesting relief based on the grounds that (1) the Office action was not received; (2) attests that a search of the file jacket indicates the Office action was not received; and (3) attests that a search of counsel's docket records indicates the Office action was not received. The petition must also be accompanied by (4) copies of the docket record where the non-received Office action would have been entered.

Applicants' petition filed 03 May 2002 satisfies all of the items above. Applicants' counsel attests that the Office action was not received and that a search of the file jacket indicated the Office action was not received. Applicants also submit a copy of the docket record for the time period of 30 August 2000, where the non-received office action would have been entered had it been received.

B. Renewed Petition under 37 CFR 1.47(a)

The renewed Petition Under 37 CFR 1.47(a) is moot since the declaration filed 03 May 2002 was executed by the previous non-signing inventor, Robert J. Mikhail. However, the declaration filed 22 March 2000 is not acceptable under 37 CFR 1.497 for the reasons explained below.

The declaration filed on 22 March 2000 is defective pursuant to 37 CFR 1.497(a)(3) which requires that the declaration "identify each inventor and the residence and country of citizenship of each inventor." In this instance, the declaration executed by Sean Farmer does not list Robert J. Mikhail as an inventor. Therefore, a new declaration executed by Sean Farmer, with the second inventor listed thereon, must be filed in order to fulfill the declaration requirement under 35 U.S.C. 371.

CONCLUSION

For the reasons above, the Petition under 37 CFR 1.181 is **GRANTED** and the holding of abandonment has been withdrawn.

The Renewed Petition under 37 CFR 1.47(a) is **DISMISSED** as **MOOT**.

A proper response must be filed within **TWO (2) MONTH** from the mail date of this decision. Extensions of time may be obtained under 37 CFR 1.136(a). A proper response must include a proper declaration in compliance with 37 CFR 1.497 (a) and (b) executed by Sean Farmer.

Please direct further correspondence with respect to this matter to the Assistant Commissioner for Patents, Box PCT, Washington, D.C. 20231, and address the contents of the letter to the attention of the PCT Legal Office.

Anthony Smith

Anthony Smith
Attorney-Advisor
Office of PCT Legal Administration
Tel: (703) 308-6314
Fax: (703) 308-6459

UNITED STATES PATENT AND TRADEMARK OFFICE

UNITED STATES DEPARTMENT OF COMMERCE
United States Patent and Trademark Office
Address: COMMISSIONER FOR PATENTS
P.O. Box 1450
Alexandria, Virginia 22313-1450
www.uspto.gov

APPLICATION NO.	FILING DATE	FIRST NAMED INVENTOR	ATTORNEY DOCKET NO.	CONFIRMATION NO.
09/509,165	06/12/2000	PATRICK W. GRAY	27866/34810	7556

7590 01/21/2004

DAVID A GASS
MARSHALL O'TOOLE GERSTEIN MURRAY & BORUN
633 SEARS TOWER
233 SOUTH WACKER DRIVE
CHICAGO, IL 60606-6402

EXAMINER
LI, BAO Q

ART UNIT	PAPER NUMBER
1648	

DATE MAILED: 01/21/2004

Please find below and/or attached an Office communication concerning this application or proceeding.

UNITED STATES
PATENT AND
TRADEMARK OFFICE

UNDER SECRETARY OF COMMERCE FOR INTELLECTUAL PROPERTY AND
DIRECTOR OF THE UNITED STATES PATENT AND TRADEMARK OFFICE
PO Box 1450 Alexandria VA 22313-1450
WWW.USPTO.GOV

JAN 22 2004

DAVID GASS
MARSHALL, GERSTEIN, & BORUN, LLP
6300 SEARS TOWER
233 S. WACKER DRIVE
CHICAGO, IL 60606

In re Application of	:
Gray et al	:
Serial No.: 09/509,165	: Decision on Petition
Filing Date: 12 June 2000	:
Attorney Docket No. 27866/34810	:

This letter is in response to the Petition filed 30 October 2003, requesting withdrawal of the restriction requirement and/or withdrawal of the finality of the Office action mailed 27 August 2003. The delay in acting upon this petition is regretted.

BACKGROUND

This application is a national stage filing under 35 USC 371 of PCT/US98/20270. On 17 May 2002, the Examiner restricted claims 1-14 and 26-37 into 12 Groups as follows.

Group I, claims 1-5, drawn to a purified polypeptide.
Group II, claims 1, 6-9, drawn to a polynucleotide, a vector comprising the polypeptide, a host cell comprising the polypeptide and a method for producing a polypeptide with the host cells.
Group III, claims 10-11, drawn to an antibody that specifically binds to a MDC polypeptide and a hybridoma cell line producing the antibody.
Group IV, claim 12, drawn to a kit for assaying MDC polypeptide.
Group V, claim 13, drawn to a method for identifying a modulator for binding MDC and a MDC receptor.

Group VI, claim 14, drawn to another method for identifying a modulator of binding MDC and a MDC receptor.
Group VII, claims 26, 30-31drawn to a method of palliating an allergic reaction in a mammalian subject.
Group VIII, claim 27, drawn to a method for treating a disease state.
Group IX, claim 28, drawn to a method for treating lupus erythematous.
Group X, claim 29, drawn to a method of treating a disease by activation, chemotaxis or proliferation of cells expressing CCR4+ receptor.
Group XI, claims 32-33, drawn to a vaccine composition and method of using the composition to stimulate an immune response.
Group XII, claims 34-37, drawn to method of screening a patient suspected of suffering from or undergoing treatment.

On 20 September 2002, Applicants elected Group VII with traverse.

On 3 December 2002, the examiner considered the traversal and made the restriction requirement final. Claims 1-14, 27-29 and 32-37 were withdrawn from consideration as being directed to non-elected inventions. Claims 26, 30 and 31 were rejected under 35 USC 112, first and second paragraph. Claims 26 and 30 were also rejected under 35 USC 102(b) as being anticipated by Wells et al.

On 3 June 2003, Applicants filed an amendment to add claims 38-43 and a response to the Office action. On 27 August 2003, the Office mailed a Final Office action, which withdrew claims 40-43 from consideration as being directed to a non-elected invention. Claims 26 and 30 continued to be rejected under 35 USC 112, first paragraph. Claims 38 and 39 were indicated as allowable.

On 30 October 2003, this petition was filed.

DISCUSSION

The file record, Restriction Requirement and the petition have been considered carefully.

The Unity of Invention determination, while essentially correct, contained the following errors, which are being corrected now to more clearer delineate between inventions.

Group II corresponds to claim 6-9. Claim 1 recites polypeptides and should not have been placed in Group II, which is drawn to polynucleotides.

Claims 13 and 14 differ only in respect to the source of cells used in step (a). Because the method steps have not been distinguished under PCT Rules, Groups V and VI are rejoined.

The vaccine composition of Group XI, (claim 32) comprising the polypeptide, has been rejoined with the polypeptide of Group I. Group XI remains directed to the method of using the polypeptide (claim 33).

While the examiner did set forth additional restrictions within Groups I, II and IV, Applicants are correct in noting that no additional restriction was required for the election of Group VII.

The Final Office action erred in providing appropriate reasoning for withdrawing the claims. The criteria of "independent and distinctness" relate to restriction practice under 35 USC 121. Because this is a national stage application filed under 35 USC 371, the examiner should have considered PCT unity of invention when determining whether the claims should have been examined or withdrawn. PCT Rule 13.2 requires (1) that the groups be linked by a same or corresponding technical feature and (2) that the technical feature defines a contribution over the prior art. Since the Examiner has determined independent claim 26 is free of the prior art, (see Final Office action) any dependent claims which are narrower in scope than claim 26 would necessarily share the same or corresponding special technical feature with the independent claim.

Moreover, the final Office action did not clearly set forth which claims were being withdrawn. The final Office action stated that claims 40, 42 and 43 were not considered and then stated that claims 40-43 were withdrawn.

Claims 26 and 30, which have been under examination as elected Group VII, are set forth below.

26. A method of palliating an allergic reaction in a mammalian subject, comprising the steps of
identifying a mammalian subject in need of treatment for an allergic reaction that is characterized by eosinophil accumulation, and
administering to said mammalian subject a composition comprising an MDC antagonist compound or TARC antagonist compound in an amount effective to palliate the allergic reaction.

Claim 30, also under examination and depending upon claim 26, further defined the antagonist as

(a) a polypeptide fragment analog of a vertebrate MDC that inhibits MDC activation of an MDC receptor;
(b) an antibody that specifically binds a vertebrate MDC polypeptide:
(c) an MDC antagonist according to claim 20,
(d) a polypeptide capable of binding to a vertebrate MDC polypeptide and comprising an antigen-binding fragment of an anti-MDC antibody;
(e) a polypeptide comprising the C- C chemokine receptor 4 (CCR4) amino acid sequence set forth in SEQ ID NO: 34 or comprising a continuous fragment thereof that is capable of binding to MDC; and
(f) combinations of (a)-(e).

New claims 40-43 are set forth below.

40. (New) The method according to claim 26 wherein the MDC antagonist compound comprises a polypeptide selected from the group consisting of
N-terminal deletion polypeptide mutants of amino acids 1-69 of SEQ ID NO: 2 in which 1-11 residues have been deleted,
a polypeptide having the amino acid sequence of SEQ ID N0: 30 ("MDC (n+1)"),
N- terminal addition polypeptide mutants of amino acids 1-69 of SEQ ID NO: 2 in which at least one amino acid residue is added,
a polypeptide having the amino acid sequence of SEQ ID NO: 31 ("MDC-yl"),
a polypeptide having the amino acid sequence of SEQ ID NO: 32 ("MDC-eyfy"), and MDC(delta)Pro2 polypeptides.

41. (New) The method according to claim 26 wherein the MDC antagonist compound comprises a polypeptide having the amino acid sequence of SEQ ID NO: 25.

42. (New) A method of palliating an allergic reaction in a mammalian subject, comprising the steps of:
identifying a mammalian subject in need of treatment for an allergic reaction that is characterized by eosinophil accumulation, and
administering to said mammalian subject a composition comprising a TARC antagonist compound in an amount effective to palliate the allergic reaction.

43. (New) A method according to claim 42 wherein the TARC antagonist compound is selected from the group consisting of:
(a) an antibody that specifically binds a vertebrate TARC polypeptide;
(b) a polypeptide that specifically binds a vertebrate TARC polypeptide and comprises an antigen-binding fragment of an anti-TARC antibody;
(c) a polypeptide comprising the C-C chemokine receptor 4 (CCR4) amino acid sequence set forth in SEQ ID NO: 34 or comprising a continuous fragment thereof that specifically binds TARC; and
(d) combinations of (a)-(c).

The Unity of Invention determination did not require a further restriction within Group VII. The first Office action on the merits examined the full scope of claim 26, as evidenced by remarks concerning TARC antagonists in the enablement rejection (page 5, second full paragraph). Newly added dependent claims 40-43 are properly narrower in scope than independent claim 26. The examiner erred in relying upon US-style restriction requirement reasoning (independent and distinct) criteria for withdrawing these claims from examination, since this application is entitled to PCT Rules. PCT Rule 13.2 states that unity of invention exists when the shared technical feature makes a contribution over the prior art. The Final Office action contains no prior art rejections on the claims, indicating that the claims share a special technical feature.

Because the scope of claims 40-43 falls within the scope of elected claim 26, because the subject matter of claim 26 has already been examined in full, because no further restriction was made within elected Group VII, and because the dependent claims must necessarily share a special technical feature when the independent claim is free of the prior art, claims 40-43 are rejoined with the elected invention.

DECISION

The petition is **GRANTED** for the reasons set forth above. In view of this decision, finality of the Office action mailed 27 August 2003 must be withdrawn. Claims 40-43 have been rejoined to the elected invention.

The application is being forwarded to the examiner for full consideration of the amendment and response filed 3 June 2003 and 30 October 2003 and completion of an Office action on the elected invention, claims 26, 30-31 and 38-43.

Should there be any questions with regard to this letter, please contact Special Program Examiner Julie Burke by letter addressed to the Director, Technology Center 1600, P.O. Box 1450, Alexandria VA 22313-1450 or by telephone at (703) 308-7553 or by facsimile transmission at (703) 305-7230.

Jasemine C. Chambers

Jasemine Chambers
TC1600 Group Director

UNITED STATES PATENT AND TRADEMARK OFFICE

Commissioner for Patents
United States Patent and Trademark Office
P.O. Box 1450
Alexandria, VA 22313-1450
www.uspto.gov

APR 2 2007

BOZICEVIC, FIELD & FRANCIS LLP
1900 UNIVERSITY AVENUE
SUITE 200
EAST PALO ALTO CA 94303

In re Application of	:
Daly et al.	:
Serial No.: 09/509,196	: PETITION DECISION
Filed: March 23, 2000	:
Attorney Docket No.: 1871-129	:

This is in response to the petition under 37 CFR 1.181, filed November 09, 2006, requesting that the examiner issue a second Examiner's Answer containing a New Ground of Rejection. The delay in acting upon this petition is regretted.

BACKGROUND

A review of the file history shows that the examiner mailed a final Office action to applicants on February 01, 2006 wherein claims 5-7, 19-22, 24-29 and 31-41 were rejected under 35 U.S.C. 101 because the claimed invention is drawn to an invention with no apparent or disclosed specific and substantial credible utility essentially for reasons of record in the previous Office actions. Claims 5-7, 19-22, 24-29 and 31-41 were also rejected under 35 U.S.C. 112, first paragraph, because the claimed invention is not supported by either a clear asserted utility or a well established utility and, therefore, one skilled in the art would not know how to use the claimed invention.

In response, applicants filed an Appeal Brief on June 06, 2006 arguing that the rejections made in the previous final Office action were flawed.

On September 18, 2006, the examiner mailed an Examiner's Answer setting forth the same rejections set forth in the final Office action of February 01, 2006 and addressed the arguments set forth in the Appeal Brief.

In response thereto, appellants filed this petition under 37 CFR 1.181, on November 09, 2006, requesting that the examiner issue a second Examiner's Answer containing a New Ground of Rejection. Appellants filed a reply brief concurrently with this petition.

DISCUSSION

Appellants submit that the statement and grounds of rejection for the rejection of claims 5-7, 19-22, 24-29 and 31-41 under 35 U.S.C. 101 were changed in the Examiner's Answer from those used in the final rejection. Specifically, the examiner stated in the grounds for the rejection that the "claimed invention is not supported by either a specific and substantial credible asserted utility or a well-established utility." Appellants assert that this language not only appeared for the first time in the Examiner's Answer but that the examiner failed to set forth an explanation of lack of support for a well-established utility; and "as such, the rejection is not only a new ground of rejection, it is also an unexplained new ground of rejection". This argument has been given careful consideration but it is unpersuasive that the examiner addressed the lack of a well-established utility for the first time in the Answer. It is noted in the final rejection of February 01, 2006 that the action does refer at page 2 to there being "no apparent or disclosed specific and substantial credible utility," and one could read "apparent" as being the same as "well-established."

Appellants also submit the examiner asserted that "there is no evidence of record to show that 2.2412 polynucleotides are in fact differentially expressed in any tumors" which is in contrast to the examiner's position prior to the Examiner's Answer, which was that such evidence had to be in the disclosure as filed. This argument is not persuasive. The examiner, in stating that there is no evidence of record, is clearly making a statement, not modifying a requirement.

Appellants further submit that the Examiner's Answer introduced or reintroduced issues which were not clearly used as basis for the final rejection. Specifically, it is alleged the examiner resurrected additional issues in the Examiner's Answer because issues raised in the first Office action were not specifically set forth as basis for the final rejection but were repeated for "essentially for reasons of record" in the 35 U.S.C. 101 rejection. Appellants' points are well taken. It is noted that the prosecution history goes back 6 years, with the first FAOM having been issued on April 2, 2001. The sole statement of rationale for the 35 U.S.C. 101 rejection in the final rejection of February 01, 2006 is that the rejection is applied "essentially for reasons of record in appropriate sections of previous office actions of record." Given the long history of this case, it does appear difficult to ascertain what "sections" of previous Office actions are "appropriate" for the purpose of the final rejection, and how the reasons for rejection are intended to be qualified by the word "essentially." Since the grounds relied on in the final rejection of February 1, 2006 are ambiguous, it appears proper for the examiner to prepare a second Examiner's Answer so that the record is clear.

DECISION

The petition is **GRANTED.**

This application will be forwarded to the examiner for an action not inconsistent with this decision. Furthermore, the examiner will consider the Reply Brief filed November 9, 2006.

Should there be any questions about this decision please contact Ms. Marianne Seidel, by letter addressed to Director, TC 1600, at the address listed above, or by telephone at 571-272-0584 or by facsimile sent to the general Office facsimile number, 571-273-8300.

John LeGuyader
Director, Technology Center 1600

UNITED STATES PATENT AND TRADEMARK OFFICE

Commissioner for Patents
United States Patent and Trademark Office
Washington, D.C. 20231
www.uspto.gov

Paper No. 9

Lackenbach Siegel Marzullo Aronson & Greenspan
One Chase Road
Penthouse Suite
Scarsdale, NY 10583

COPY MAILED

MAR 0 4 2003

OFFICE OF PETITIONS

In re Application of :
Igor Nosov et al. :
Application No. 09/509,256 :
Filed: March 22, 2000 :
Attorney Docket No. P-001ERM :

ON PETITION

This is a decision on the petition under 37 CFR 1.137(b), filed February 24, 2003, to revive the above-identified application.

The petition is **GRANTED**.

This application became abandoned for failure to reply in a timely manner in reply to the non-final Office action mailed March 14, 2002, which set a statutory period for reply of three (3) months. Accordingly, the application became abandoned on June 15, 2002.

This application is being forwarded to Technology Center AU 1771.

Telephone inquiries regarding this decision may be directed to Latrice Bond at (703) 308-6911.

Latrice Bond

Latrice Bond
Paralegal Specialist
Office of Petitions
Office of the Deputy Commissioner
for Patent Examination Policy

UNITED STATES PATENT AND TRADEMARK OFFICE

Commissioner for Patents
United States Patent and Trademark Office
P.O. Box 1450
Alexandria, VA 22313-1450
www.uspto.gov

LACKENBACH SIEGEL, LLP
LACKENBACH SIEGEL BUILDING
1 CHASE ROAD
SCARSDALE, NY 10583

COPY MAILED

AUG 1 0 2005

OFFICE OF PETITIONS

In re Application of :
Nosov, et al. :
Application No. 09/509,256 :
Filed: March 22, 2000 :
Attorney Docket No. P-001ERM :

ON PETITION

This is a decision on the petition under 37 CFR 1.137(a) filed July 21, 2005.

The petition is **GRANTED.**

This application became abandoned for failure to timely reply to the non-final Office action mailed July 1, 2004. The non-final Office action set shortened statutory period for reply of three months from its mailing date. Petitioner argues that a reply to the non-final Office action was sent by facsimile on November 1, 2004, along with a request for an extension of time within the first month. The reply was not found in the application file, but the evidence is convincing that a reply to the non-final Office action was transmitted by facsimile on November 1, 2004.

The file is now being forwarded to Technology Center 1700, GAU 1764 for further processing.

Telephone inquiries concerning this decision may be directed to the undersigned at (571) 272-3222.

Kenya A. McLaughlin

Kenya A. McLaughlin
Petitions Attorney
Office of Petitions

UNITED STATES PATENT AND TRADEMARK OFFICE

Commissioner for Patents
United States Patent and Trademark Office
P.O. Box 1450
Alexandria, VA 22313-1450
www.uspto.gov

FISH & RICHARDSON PC
225 FRANKLIN ST
BOSTON, MA 02110

COPY MAILED

JUL 0 5 2005

OFFICE OF PETITIONS

In re Application of
Harold Jay William
Application No. 09/509,301
Filed: March 23, 2000
Attorney Docket No. 11750-002001

Decision on Petition

This is a decision on the petition under 37 CFR 1.137(b), filed March 14, 2005, to revive the above-identified application.

The petition is **DISMISSED**.

Any request for reconsideration must be submitted within TWO (2) MONTHS from the mail date of this decision. No further petition fee is required for the request. Extensions of time under 37 CFR 1.136(a) are permitted. The reconsideration request should include a cover letter entitled "Renewed Petition under 37 CFR 1.137(b)."

This application became abandoned for failure to timely reply to the final Office action mailed October 1, 2003. No extensions of time under the provisions of 37 CFR 1.136(a) were obtained. Accordingly, this application became abandoned on January 1, 2004. A Notice of Abandonment was mailed June 14, 2004.

A grantable petition under 37 CFR 1.137(b) must be accompanied by:
(1) the required reply,
(2) the petition fee,
(3) a statement that the entire delay in filing the required reply from the due date for the reply until the filing of a grantable petition pursuant to 37 CFR 1.137(b) was unintentional, and
(4) a terminal disclaimer and fee if the application was filed on or before June 8, 1995 or if the application is a design application.

The instant petition lacks item (1).

In a non-provisional application abandoned for failure to reply to a final action, the reply required for consideration of a petition to revive must be:
(A) a Notice of Appeal (and appeal fee)
(B) an amendment that cancels all the rejected claims or otherwise *prima facie* places the application in condition for allowance; or
(C) the filing of a Request for Continued Examination (RCE).
See MPEP 711.03(c)(III)(A)(2).

As of this date, none of the above three acceptable forms of reply have been filed. The proposed amendment filed with the instant petition was sent to the examiner to determine whether it placed the application in condition for allowance. The examiner determined that the proposed amendment did not prima facie place the application in condition for allowance and was therefor an improper reply to the final Office action mailed on October 1, 2003.

Any renewed petition should be accompanied by a proper reply in the form of a Notice of Appeal or the filing of a RCE. If petitioner fails to reply in the form of a Notice of Appeal (and fee) or a

proper RCE, it may be construed as an intentional delay in presenting a grantable petition, which may adversely affect petitioner's ability to revive the abandoned application.

Petitioner may wish to note Office records indicate the name of the inventor is Harold Jay William. The name is listed on the declaration as "William, Harold Jay." The name is listed as JAY, William, Harold on the copy of the first page of the published International Application submitted with the original application. The inventor's name is listed as William Harold Jay on the instant petition. If the inventor's name is not Harold Jay William, petitioner may wish to file a petition under 37 CFR 1.182 to the correct the name along with the request for reconsideration under 37 CFR 1.137(b). Any petition under 37 CFR 1.182 should be accompanied by a supplemental Application Data Sheet with the correct name for the inventor.

Per MPEP 503, an attorney docket number should not be longer than 12 digits not including hyphens and slashes which the Office can omit when entering the docket number into Office records. The attorney docket number listed on the instant petition is 11750-002001/2274032 /PO9462/97-MJC.

Further correspondence with respect to this matter should be addressed as follows:

By mail: Mail Stop Petition
Commissioner for Patents
P.O. Box 1450
Alexandria, VA 22313-1450

By facsimile: (571) 273-8300
Attn: Office of Petitions

If a request for reconsideration is filed, and a decision on the new petition is not received within three months, petitioner may wish to call the number below to check on the status of the renewed petition.

Telephone inquiries should be directed to Petitions Attorney Steven Brantley at (571) 272-3203.

Charles Steven Brantley
Petitions Attorney
Office of Petitions

UNITED STATES PATENT AND TRADEMARK OFFICE

Commissioner for Patents
United States Patent and Trademark Office
P.O. Box 1450
Alexandria, VA 22313-1450
www.uspto.gov

FISH & RICHARDSON PC
225 FRANKLIN ST
BOSTON, MA 02110

COPY MAILED

AUG 2 5 2005

OFFICE OF PETITIONS

In re Application of
Harold Jay William
Application No. 09/509,301
Filed: March 23, 2000
Attorney Docket No. 11750-002001

Decision on Petition

This is a decision on the renewed petition under 37 CFR 1.137(b), filed July 22, 2005, to revive the above-identified application.

The petition is **granted.**

This application became abandoned for failure to timely reply to the final Office action mailed October 1, 2003. No extensions of time under the provisions of 37 CFR 1.136(a) were obtained. Accordingly, this application became abandoned on January 1, 2004. A Notice of Abandonment was mailed June 14, 2004.

The instant petition requests revival of the application. Petitioner has met the requirements to revive the above-identified application pursuant to 37 CFR 1.137(b). Therefore, the petition is granted and the application is revived.

Technology Center Art Unit 1724 will be informed the application has been revived so that the examiner may consider the RCE and other papers filed July 22, 2005, in due course.

Telephone inquiries may be directed to Petitions Attorney Steven Brantley at (571) 272-3203.

Charles Steven Brantley
Petitions Attorney
Office of Petitions

31 JUL 2002

UNITED STATES PATENT AND TRADEMARK OFFICE

COMMISSIONER FOR PATENTS
UNITED STATES PATENT AND TRADEMARK OFFICE
WASHINGTON, D.C. 20231
www.uspto.gov

Allen R. Kipnes
Watov & Kipnes, P.C.
P.O. Box 247
Princeton Junction, NJ 08550

In re Application of	:	
AIDAM, et al.	:	DECISION ON PETITION
Application No.: 09/509,317	:	
PCT No.: PCT/EP98/06056	:	UNDER 37 CFR 1.137(b)
Int. Filing Date: 24 September 1998	:	
Priority Date: 26 September 1997	:	
Attorney Docket No.: 342.1.005	:	
For: MAGNETICALLY SHIELDED CONTAINER	:	

This decision is in response to applicant's "Petition to Revive an Unintentionally Abandoned Application" filed 02 February 2001 with the United States Patent and Trademark Office (USPTO) and again by facsimile on 17 July 2002. Applicant included the $620.00 small entity petition fee.

BACKGROUND

On 24 September 1998, applicant filed international application PCT/EP98/06056, which claimed priority of an earlier application filed 26 September 1997. A Demand for international preliminary examination, in which the United States was elected was filed prior to the expiration of nineteen months from the priority date. Accordingly, the thirty-month period for paying the basic national fee in the United States expired at midnight on 26 March 2000.

On 23 March 2000, applicant filed a transmittal letter for entry into the national stage in the United States, which was accompanied by payment of the full U.S. Basic National Fee; a copy of the International Search Report and a First Preliminary Amendment. An oath or declaration of the inventors was not included.

On 17 May 2000, applicant was mailed a "NOTIFICATION OF MISSING REQUIREMENTS UNDER 35 U.S.C. 371" (Form PCT/DO/EO/905) informing applicant of the need to provide an oath or declaration of the inventors, in compliance with 37 CFR 1.497(a) and (b), identifying the application by the International application number and international filing date and providing a surcharge of $130.00 for providing the oath or declaration later than the appropriate 20 or 30 months from the earliest priority date. Applicant was given one month to respond and advised that this time period could be extended with a proper petition and payment of fees.

On 19 January 2001, the application became abandoned as to the United States for failure to respond to the "NOTIFICATION OF MISSING REQUIREMENTS UNDER 35 U.S.C. 371" (Form PCT/DO/EO/905) mailed 17 May 2000.

On 02 February 2001, applicant filed the present petition accompanied by: a check in the amount of $620.00 as payment of the petition to revive fee; an executed combined declaration and power of attorney; an assignment document for recording and a check in the amount of $65.00 as payment of the surcharge for providing the oath or declaration later than the appropriate 20 or 30 months from the earliest priority date and $40.00 as payment of the assignment recordation fee.

DISCUSSION

A petition under 37 CFR 1.137(b) requesting that the application be revived on the grounds of unintentional abandonment must be accompanied by (1) the required reply, (2) the petition fee required by law, (3) a statement that the, "entire delay in filing the required reply from the due date for the reply until the filing of a grantable petition pursuant to this paragraph was unintentional" and (4) any terminal disclaimer and fee pursuant to 37 CFR 1.137(c) (where required).

With regard to Item (1), the required reply was submission of compliant oath or declaration. Applicant has included the combined declaration and power of attorney along with the present petition.

As to Item (2) the appropriate petition fee of $620.00 as required by 37 CFR 1.17(m) has been submitted.

With regard to Item (3), applicant's statement that, "the abandonment was unintentional" is being interpreted to mean that the entire delay in filing the required reply from the due date for the reply until the filing of a grantable petition pursuant to this paragraph was unintentional. If this is an incorrect reading of applicant's statement applicant should contact the PCT Legal Office immediately. Applicant's statement and the prompt filing of the petition satisfies the requirement of 37 CFR 1.137(b)(3).

As to Item (4), the terminal disclaimer is not required since this application was filed after 08 June 1995.

A review of the application file reveals that, with the filing of the present petition and accompanying papers, a proper response has been submitted and all of the requirements of 37 CFR 1.137(b) for revival have been satisfied and revival is therefore appropriate. Further, a review of the application file reveals that all of the requirements of 35 U.S.C. 371 for entry into the national stage in the United States have been satisfied.

CONCLUSION

For the reasons stated above, the petition for revival is **GRANTED**.

This application has an international application filing date of 24 September 1998 and will be given a date of **02 February 2001** under 35 U.S.C. 371.

This application is being returned to the DO/EO/US for further processing in accordance with this decision.

Derek A. Putonen
Petitions Attorney
PCT Legal Office
Tel: (703) 305-0130
Fax: (703) 308-6459

PTO/SB/66 (03-09)
Approved for use through 03/31/2012. OMB 0651-0016
U.S. Patent and Trademark Office: U.S. DEPARTMENT OF COMMERCE
Under the Paperwork Reduction Act of 1995, no persons are required to respond to a collection of information unless it displays valid OMB control number.

PETITION TO ACCEPT UNINTENTIONALLY DELAYED PAYMENT OF MAINTENANCE FEE IN AN EXPIRED PATENT (37 CFR 1.378(c))

Patent Number	Issue Date (YYYY-MM-DD)	Application Number	Filing Date (YYYY-MM-DD)	Docket Number (if applicable)
6,315,556	2001-11-13	09/509,370	2000-03-24	198/38409/408-PCT

CAUTION: Maintenance fee (and surcharge, if any) payment must correctly identify: (1) the patent number and (2) the application number of the actual U.S. application leading to issuance of that patent to ensure the fee(s) is/are associated with the correct patent. 37 CFR 1.366(c) and (d).

SMALL ENTITY
☒ Patentee claims, or has previously claimed, small entity status. See 37 CFR 1.27.

LOSS OF ENTITLEMENT TO SMALL ENTITY STATUS
☐ Patentee is no longer entitled to small entity status. See 37 CFR 1.27(g)

NOT Small Entity		Small Entity	
Fee	Code	Fee	Code
○ 3 ½ year	(1551)	○ 3 ½ year	(2551)
○ 7 ½ year	(1552)	◉ 7 ½ year	(2552)
○ 11 ½ year	(1553)	○ 11 ½ year	(2553)

SURCHARGE
The surcharge required by 37 CFR 1.20(i)(2) (Fee Code 1558) must be paid as a condition of accepting unintentionally delayed payment of the maintenance fee.

MAINTENANCE FEE (37 CFR 1.20(e)-(g))
The appropriate maintenance fee must be submitted with this petition.

STATEMENT
THE UNDERSIGNED CERTIFIES THAT THE DELAY IN PAYMENT OF THE MAINTENANCE FEE TO THIS PATENT WAS UNINTENTIONAL

PETITIONER(S) REQUEST THAT THE DELAYED PAYMENT OF THE MAINTENANCE FEE BE ACCEPTED AND THE PATENT REINSTATED

THIS PORTION MUST BE COMPLETED BY THE SIGNATORY OR SIGNATORIES

37 CFR 1.378(d) states: "Any petition under this section must be signed by an attorney or agent registered to practice before the Patent and Trademark Office, or by the patentee, the assignee, or other party in interest."

I certify, in accordance with 37 CFR 1.4(d)(4) that I am

◉ An attorney or agent registered to practice before the Patent and Trademark Office

○ A sole patentee

○ A joint patentee; I certify that I am authorized to sign this submission on behalf of all the other patentees.

○ A joint patentee; all of whom are signing this e-petition

○ The assignee of record of the entire interest

Patent Practitioner			
A signature of the applicant or representative is required in accordance with 37 CFR 1.33 and 10.18. Please see 37 CFR 1.4(d) for the form of the signature			
Signature	/James R. Foley/	Date (YYYY-MM-DD)	2010-01-07
Name	James R. Foley	Registration Number	39979

This collection of information is required by 37 CFR 1.378(c). The information is required to obtain or retain a benefit by the public which is to file (and by the USPTO to process) an application. Confidentiality is governed by 35 U.S.C. 122 and 37 CFR 1.11 and 1.14. This collection is estimated to take 1 hour to complete, including gathering, preparing, and submitting the completed application form to the USPTO. Time will vary depending upon the individual case. Any comments on the amount of time you require to complete this form and/ or suggestions for reducing this burden, should be sent to the Chief Information Officer, U.S. Patent and Trademark Office, U.S. Department of Commerce, P.O. Box 1450, Alexandria, VA 22313-1450. DO NOT SEND FEES OR COMPLETED FORMS TO THIS ADDRESS. **This form can only be used when in conjunction with EFS-Web. If this form is mailed to the USPTO, it may cause delays in reinstating the patent.**

Privacy Act Statement

The Privacy Act of 1974 (P.L. 93-579) requires that you be given certain information in connection with your submission of the attached form related to a patent application or patent. Accordingly, pursuant to the requirements of the Act, please be advised that: (1) the general authority for the collection of this information is 35 U.S.C. 2(b)(2); (2) furnishing of the information solicited is voluntary; and (3) the principal purpose for which the information is used by the U.S. Patent and Trademark Office is to process and/or examine your submission related to a patent application or patent. If you do not furnish the requested information, the U.S. Patent and Trademark Office may not be able to process and/or examine your submission, which may result in termination of proceedings or abandonment of the application or expiration of the patent.

The information provided by you in this form will be subject to the following routine uses:

1. The information on this form will be treated confidentially to the extent allowed under the Freedom of Information Act (5 U.S.C. 552) and the Privacy Act (5 U.S.C. 552a). Records from this system of records may be disclosed to the Department of Justice to determine whether the Freedom of Information Act requires disclosure of these records.

2. A record from this system of records may be disclosed, as a routine use, in the course of presenting evidence to a court, magistrate, or administrative tribunal, including disclosures to opposing counsel in the course of settlement negotiations.

3. A record in this system of records may be disclosed, as a routine use, to a Member of Congress submitting a request involving an individual, to whom the record pertains, when the individual has requested assistance from the Member with respect to the subject matter of the record.

4. A record in this system of records may be disclosed, as a routine use, to a contractor of the Agency having need for the information in order to perform a contract. Recipients of information shall be required to comply with the requirements of the Privacy Act of 1974, as amended, pursuant to 5 U.S.C. 552a(m).

5. A record related to an International Application filed under the Patent Cooperation Treaty in this system of records may be disclosed, as a routine use, to the International Bureau of the World Intellectual Property Organization, pursuant to the Patent Cooperation Treaty.

6. A record in this system of records may be disclosed, as a routine use, to another federal agency for purposes of National Security review (35 U.S.C. 181) and for review pursuant to the Atomic Energy Act (42 U.S.C. 218(c)).

7. A record from this system of records may be disclosed, as a routine use, to the Administrator, General Services, or his/her designee, during an inspection of records conducted by GSA as part of that agency's responsibility to recommend improvements in records management practices and programs, under authority of 44 U.S.C. 2904 and 2906. Such disclosure shall be made in accordance with the GSA regulations governing inspection of records for this purpose, and any other relevant (i.e., GSA or Commerce) directive. Such disclosure shall not be used to make determinations about individuals.

8. A record from this system of records may be disclosed, as a routine use, to the public after either publication of the application pursuant to 35 U.S.C. 122(b) or issuance of a patent pursuant to 35 U.S.C. 151. Further, a record may be disclosed, subject to the limitations of 37 CFR 1.14, as a routine use, to the public if the record was filed in an application which became abandoned or in which the proceedings were terminated and which application is referenced by either a published application, an application open to public inspections or an issued patent.

9. A record from this system of records may be disclosed, as a routine use, to a Federal, State, or local law enforcement agency, if the USPTO becomes aware of a violation or potential violation of law or regulation.

UNITED STATES PATENT AND TRADEMARK OFFICE

Commissioner for Patents
United States Patent and Trademark Office
P.O. Box 1450
Alexandria, VA 22313-1450
www.uspto.gov

In re Patent No. 6315556
Issue Date: November 13,2001
Application No. 09509370
Filed: March 24,2000
Attorney Docket No. HULSECASE40

:
:DECISION GRANTING PETITION
:UNDER 37 CFR 1.378(c)
:

This is a decision on the electronic petition, filed January 7,2010 ,under 37 CFR 1.378(c) to accept the unintentionally delayed payment of the 7.5 year maintenance fee for the above-identified patent.

The petition is **GRANTED**.

The maintenance fee is accepted, and the above-identified patent reinstated as of January 7,2010 . This decision also constitutes notice that the fee has been accepted. An electronic copy of the petition and this decision has been created as an entry in the Image File Wrapper. Nevertheless, petitioner should print and retain an independent copy.

Telephone inquiries related to this electronic decision should be directed to the Electronic Business Center at 1-866-217-9197.

UNITED STATES PATENT AND TRADEMARK OFFICE

Commissioner for Patents
United States Patent and Trademark Office
P.O. Box 1450
Alexandria, VA 22313-1450
www.uspto.gov

Paper No. 16

C JAMES BUSHMAN
BROWNING BUSHMAN
5718 WESTHEIMER
SUITE 1800
HOUSTON TX 77057

COPY MAILED

AUG 0 4 2004

OFFICE OF PETITIONS

In re Application of
PeterFinmans et al.
Application No. 09/509,400
Filed: June 19, 2000
Attorney Docket Number: MULLER-17

ON PETITION

This is a decision on the petition under 37 CFR 1.137(b), filed May 5, 2003, to revive the above identified application.

The petition is **GRANTED**.

This application became abandoned for failure to timely reply to the non-Final Office Action mailed April 18, 2002. A shortened statutory period of three months was set for replying to the non-Final Office Action. No extensions of time having been requested, this application became abandoned July 19, 2002. Accordingly, a Notice of Abandonment was mailed November 14, 2002.

Petitioner files the instant petition under 37 CFR 1.137(b). [1]

It should be noted that the delay in processing the petition to revive was probably due to the fact that neither the petition nor the amendment indicated an application number as required and was only now matched with the application file. In the future, please be careful to properly identify all correspondence filed with the USPTO.

This application is being forwarded to Technology Center 1714 for appropriate action on the amendment filed May 5, 2003.

Telephone inquiries concerning this matter should be directed to the undersigned Petitions Attorney at (703) 305-4497.

Patricia Faison-Ball

Patricia Faison-Ball
Senior Petitions Attorney
Office of Petitions

---

[1] Effective December 1, 1997, the provisions of 37 CFR 1.137(b) now provide that where the delay in reply was unintentional, a petition may be filed to revive an abandoned application or a lapsed patent pursuant to 37 CFR 1.137(b). A grantable petition filed under the provisions of 37 CFR 1.137(b) must be accompanied by:

(1) the required reply, unless previously filed. In a nonprovisional application abandoned for failure to prosecute, the required reply may be met by the filing of a continuing application. In an application or patent, abandoned or lapsed for failure to pay the issue fee or any portion thereof, the required reply must be the payment of the issue fee or any outstanding balance thereof.

(2) the petition fee as set forth in 37 CFR 1.17(m);

(3) a statement that the entire delay in filing the required reply from the due date for the reply until the filing of a grantable petition pursuant to 37 CFR 1.137(b) was unintentional. The Commissioner may required additional information where there is a question whether the delay was unintentional; and

(4) any terminal disclaimer (and fee as set forth in 37 CFR 1.20(d)) required pursuant to 37 CFR 1.137(c)).

UNITED STATES PATENT AND TRADEMARK OFFICE

Commissioner for Patents
United States Patent and Trademark Office
P.O. Box 1450
Alexandria, VA 22313-1450
www.uspto.gov

C JAMES BUSHMAN
BROWNING BUSHMAN
5718 WESTHEIMER
SUITE 1800
HOUSTON TX 77057

COPY MAILED

DEC 14 2007

OFFICE OF PETITIONS

In re Patent No. 6,887,398 :
Issued: May 3, 2005 :
Application No. 09/509,400 : ON PETITION
Filed: June 19, 2000 :
Attorney Docket Number: MULLER-17 :

This is a decision on the petition, filed December 8, 2006 under 37 CFR 3.81(b)[1] to correct the assignee's name on the front of the Patent.

The petition is **GRANTED**.

Petitioner states that the assignee is SASOL GERMANY GMBH, and seeks to correct an error on the face of the patent. Petitioner does not indicate that the failure to include the correct assignee name on the Fee(s) Transmittal form PTOL-85(b) was inadvertent however it will be so construed. Petitioner must notify the Office if this is **not** a correct interpretation of the statement contained in the petition.

Accordingly, petitioner requests that a certificate of correction be issued to reflect the correct assignee on the front page of the Letters Patent.

37 CFR 3.81(b), effective June 25, 2004, reads:

> *After payment of the issue fee:* Any request for issuance of an application in the name of the assignee submitted after the date of payment of the issue fee, and any request for a patent to be corrected to state the name of the assignee, must state that the assignment was submitted for recordation as set forth in § 3.11 before issuance of the patent, and must include a request for a certificate of correction under § 1.323 of this chapter (accompanied by the fee set forth in § 1.20(a) and the processing fee set forth in § 1.17(i) of this chapter.

The request is accompanied by a certificate of correction. Office assignment records reflect that SASOL GERMANY GMBH is the assignee of record and thus, the certificate of correction will be issued in the name of SASOL GERMANY GMBH in accordance with the Office assignment records.

---

[1] *See* Official Gazette of June 22, 2004

The petition fee and fee for the certificate of correction have been applied.

Accordingly, as the request complies with the provisions of 37 CFR 3.81(b), it would be appropriate for a certificate of correction to issue.

Inquiries concerning this decision should be directed to the undersigned at (571) 272-3212. Any questions concerning the issuance of a certificate of correction should be directed to the Certificates of Correction Branch at (703) 305-8309.

This matter is being referred to the Certificates of Correction Branch for issuance of a certificate of correction.

Patricia Faison-Ball

Patricia Faison-Ball
Senior Petitions Attorney
Office of Petitions

UNITED STATES PATENT AND TRADEMARK OFFICE

Commissioner for Patents
United States Patent and Trademark Office
P.O. Box 1450
Alexandria, VA 22313-1450
www.uspto.gov

Paper No. 17

JOHN C EVANS
REISING ETHINGTON BARNES
KISSELLE LEARMAN & MCCULLOCH
PO BOX 4390
TROY MI 48099-4390

COPY MAILED

AUG 18 2005

OFFICE OF PETITIONS

In re Application of	:	
Mills et al.	:	
Application No. 09/509,433	:	ON PETITION
Filed: May 30, 2000	:	
Attorney Docket No. MBM1420	:	

This is a decision on the petition under 37 C.F.R. § 1.137(b), filed July 11, 2005, to revive the above-identified application.

The petition is **GRANTED.**

This application became abandoned for failure to timely and properly reply to the final Office action mailed January 15, 2002. No extensions of time under the provisions of 37 CFR 1.136(a) were obtained. Accordingly, this application became abandoned on April 16, 2002. A Notice of Abandonment was mailed October 1, 2002.

The above-identified application has been abandoned for an extended period of time. The Patent and Trademark Office is relying on petitioner's duty of candor and good faith and accepting the statement that the entire delay in filing the required reply from the due date for the reply until the filing of a grantable petition pursuant to 37 CFR 1.137(b) was unintentional.[1]

Petitioner has met the requirements to revive the above-identified application pursuant to 37 CFR 1.137(b).

There is no indication that the person signing the instant petition was ever given a power of attorney or authorization of agent to prosecute the above-identified application. If the person signing the instant petition desires to receive future correspondence regarding this application, the appropriate power of attorney or authorization of agent must be submitted. While a courtesy copy of this decision is being mailed to the person signing the instant petition, all future correspondence will be directed solely to the address currently of record until such time as appropriate instructions are received to the contrary.

---

[1] See Changes to Patent Practice and Procedure, 62 Fed. Reg. at 53160 and 53178; 1203 Off. Gaz. Pat. Office at 88 and 103 (responses to comments 64 and 109) (applicant obligated under 37 CFR 10.18 to inquire into the underlying facts and circumstances when providing the statement required by 37 CFR 1.137(b) to the Patent and Trademark Office).

The file is now being forwarded to Technology Center 2800 for processing of the Request for Continued Examination under 37 CFR 1.114 filed with the instant petition.

Telephone inquiries regarding this decision should be directed to the undersigned at (571) 272-3282.

Liana Chase
Petitions Examiner
Office of Petitions
Office of the Deputy Commissioner
for Patent Examination Policy

cc: DLA PIPER RUDNICK GRAY CARY US LLP
4365 EXECUTIVE DRIVE
SUITE 1100
SAN DIEGO, CA 92121-2133

UNITED STATES PATENT AND TRADEMARK OFFICE

Commissioner for Patents
United States Patent and Trademark Office
P.O. Box 1450
Alexandria, VA 22313-1450
www.uspto.gov

PHILIPS INTELLECTUAL PROPERTY & STANDARDS
3 BURLINGTON WOODS DRIVE
BURLINGTON, MA 01803

COPY MAILED

FEB 0 2 2009

OFFICE OF PETITIONS

In re Application of
Robin Walter Mills, et al.
Application No. 09/509,433
Filed: May 30, 2000
Attorney Docket No. PH010525 (TIR066)

ON PETITION

This is a decision on the petition under 37 CFR 1.137(b), filed October 24, 2008, to revive the above-identified application.

The petition is **GRANTED**.

The application became abandoned for failure to timely file a reply within the meaning of 37 CFR 1.113 to the final Office action mailed January 24, 2008. This decision precedes the mailing of a Notice of Abandonment. On October 24, 2008, the present petition was filed.

The proposed reply required for consideration of a petition to revive must be a Notice of Appeal (and appeal fee required by 37 CFR 41.20(b)(2), an amendment that *prima facie* places the application in condition for allowance, a Request for Continued Examination and submission (37 CFR 1.114), or the filing of a continuing application under 37 CFR 1.53(b). See MPEP 711.03(c)(II)(A)(2).

The petition satisfies the requirements of 37 CFR 1.137(b) in that petitioner has supplied (1) the reply in the form of a Request for Continued Examination (RCE) in accordance with 37 CFR 1,114, including the fee of $810; (2) the petition fee of $1,620; and (3) an adequate statement of unintentional delay[1].

This application is being referred to Technology Center AU 2885 for processing of the RCE and for appropriate action by the Examiner in the normal course of business in accordance with 37 CFR 1.114.

[1] 37 CFR 1.137(b)(3) requires a statement that the entire delay in filing the required reply from the due date for the reply until the filing of a grantable petition pursuant to 37 CFR 1.137(b) was unintentional. Although the statement contained in the petition varies from the language required by 37 CFR 1.137(b)(3), the statement will be construed as the statement required by 37 CFR 1.137(b)(3). Petitioner must notify the Office if this is **not** a correct interpretation of the statement contained in the instant petition.

Telephone inquiries concerning this decision should be directed to the undersigned at (571) 272-3204. Inquiries relating to further prosecution should be directed to the Technology Center.

Sherry D. Brinkley
Petitions Examiner
Office of Petitions

UNITED STATES PATENT AND TRADEMARK OFFICE

COMMISSIONER FOR PATENTS
UNITED STATES PATENT AND TRADEMARK OFFICE
WASHINGTON, D.C. 20231
www.uspto.gov

Paper No. 13

Bradley D. Lytle
OBLON, SPIVAK, MCCLELAND,
MAIER & NEUSTADT, P.C.
Fourth Floor
1755 Jefferson Davis Highway
Arlington, Virginia 22202

APR 12 2002

In re Application of	:	
LEIJON et al.	:	DECISION
Application No. 09/509,438	:	ON PETITION
Filed: June 13, 2000	:	
Attorney Docket No. 705/72339-2	:	

This is a decision on the petition, filed March 14, 2002 requesting that the prosecution in the above-identified patent application be suspended for a period of six months under 37 C.F.R. § 1.103(a). Petitioner also requests a second suspension of time for an additional six months, pursuant to MPEP § 1002.02(c)9, for a total of twelve months, beginning with the filing of the subject Petition.

Regarding a suspension on request of the applicant, 37 CFR 1.103(a) provides:

> (a) Suspension for cause. On request of the applicant, the Office may grant a suspension of action by the Office under this paragraph for good and sufficient cause. *The Office will not suspend action if a reply by applicant to an Office action is outstanding.*

A review of the record indicates that an Office Action was mailed on November 23, 2001. To date, no reply to the outstanding Office Action has been received. Accordingly, Petitioner's request for suspension of action in this application under 37 CFR1.103(a) is denied as being improper. The period for response to the outstanding Office Action continues to run three (3) months from the November 23, 2001 mail date.

The petition is **DENIED**.

Inquiries regarding this decision should be directed to Richard Seidel at (703) 306-3431.

Richard Seidel, Director
Technology Center 2800
Semiconductors, Electrical and Optical
Systems and Components

UNITED STATES PATENT AND TRADEMARK OFFICE

COMMISSIONER FOR PATENTS
UNITED STATES PATENT AND TRADEMARK OFFICE
WASHINGTON, D.C. 20231
www.uspto.gov

Paper No. 17

Bradley D. Lytle
OBLON, SPIVAK, MCCLELAND,
MAIER & NEUSTADT, P.C.
Fourth Floor
1755 Jefferson Davis Highway
Arlington, Virginia 22202

JUL 17 2002

In re Application of	:	
LEIJON et al.	:	DECISION
Application No. 09/509,438	:	ON PETITION
Filed: June 13, 2000	:	
Attorney Docket No. 196975-6X PCT	:	

This is a decision on the petition, filed April 23, 2002 requesting that the prosecution in the above-identified patent application be suspended for a period of six months under 37 C.F.R. § 1.103(a), and an additional six months, pursuant to MPEP § 1002.02(c)9, for a total of twelve months, beginning with the filing of the subject Petition.

Regarding a suspension on request of the applicant, 37 CFR 1.103(a) provides:

> (a) Suspension for cause. On request of the applicant, the Office may grant a suspension of action by the Office under this paragraph for good and sufficient cause. The Office will not suspend action if a reply by applicant to an Office action is outstanding. Any petition for suspension of action under this paragraph must specify a period of suspension not exceeding six months. Any petition for suspension of action under this paragraph must also include:
> (1) A showing of good and sufficient cause for suspension of action; and
> (2) The fee set forth in § 1.17(h), unless such cause is the fault of the Office

In the Request, to establish cause, Petitioner asserts the claims and issues of the instant application are relevant to the claims and issues in at least U.S. Application No. 08/973,019 which Petitioner has appealed. Further, because the appeal of '019 will materially affect the prosecution of the instant application, the instant application should be suspended pending the decision on appeal of '019.

A review of the record indicates the instant application has claims and issues that are relevant to

appealed case '019 . The claims in the instant application and appealed case '019 are both directed toward the particular structure of the high voltage cable. Consequently, since the outcome of appealed case '019 will materially affect prosecution of the instant application, good and sufficient reasons have been demonstrated to warrant suspension of action.

Accordingly, the petition to suspend prosecution is GRANTED for a period of up to twelve (12) months starting from the filing of petition, April 23, 2002.

Inquiries regarding this decision should be directed to Richard Seidel at (703) 306-3431.

Richard Seidel, Director
Technology Center 2800
Semiconductors, Electrical and Optical
Systems and Components

UNITED STATES PATENT AND TRADEMARK OFFICE

COMMISSIONER FOR PATENTS
UNITED STATES PATENT AND TRADEMARK OFFICE
WASHINGTON, D.C. 20231
www.uspto.gov

Paper No.

Bradley D. Lytle
OBLON, SPIVAK, MCCLELAND,
MAIER & NEUSTADT, P.C.
1940 Duke Street
Alexandria, Virginia 22314

JUN 11 2003

In re Application of	:	
LEIJON et al.	:	DECISION
Application No. 09/509,438	:	ON PETITION
Filed: June 13, 2000	:	
Attorney Docket No. 196975US-6X PCT	:	

This is a decision on the petition, filed April 23, 2003, requesting that the prosecution in the above-identified patent application be suspended for an additional six months beyond the 12 months that prosecution has been suspended under 37 C.F.R. § 1.103(a).

Regarding a suspension on request of the applicant, 37 CFR 1.103(a) provides:

> (a) Suspension for cause. On request of the applicant, the Office may grant a suspension of action by the Office under this paragraph for good and sufficient cause. The Office will not suspend action if a reply by applicant to an Office action is outstanding. Any petition for suspension of action under this paragraph must specify a period of suspension not exceeding six months. Any petition for suspension of action under this paragraph must also include:
> (1) A showing of good and sufficient cause for suspension of action; and
> (2) The fee set forth in § 1.17(h), unless such cause is the fault of the Office

In the Request, to establish cause, Petitioner asserts the claims and issues of the instant application are relevant to the claims and issues in at least U.S. Application No. 08/973,019 which Petitioner has appealed. Further, because the appeal of '019 will materially affect the prosecution of the instant application, the instant application should be suspended pending the decision on appeal of '019.

A review of the record indicates the instant application has claims and issues that are relevant to appealed case '019 . The claims in the instant application and appealed case '019 are both directed toward the particular structure of the high voltage cable. Consequently, since the

outcome of appealed case '019 will materially affect prosecution of the instant application, good and sufficient reasons have been demonstrated to warrant suspension of action.

Accordingly, the petition to suspend prosecution is GRANTED for a period of up to six (6) months starting from the filing of petition, April 23, 2003.

Inquiries regarding this decision should be directed to Elvin Enad at (703) 308-7619.

Richard Seidel, Director
Technology Center 2800
Semiconductors, Electrical and Optical
Systems and Components

UNITED STATES PATENT AND TRADEMARK OFFICE

OCT 25 2005

Commissioner for Patents
United States Patent and Trademark Office
P.O. Box 1450
Alexandria, VA 22313-1450
www.uspto.gov

FOLEY & LARDNER
SUITE 500
3000 K STREET, NW
WASHINGTON, DC 20007

In re Application of	:
Beste Gerald et al	:
Serial No.: 09/509,444	: PETITION DECISION
Filed: May 21, 2000	:
Attorney Docket No.: 584.04-US1	:

This is in response to the petition under 37 CFR 1.181, filed August 26, 2005, requesting entry of an amendment after Final rejection or reopening or prosecution.

BACKGROUND

A review of the file history shows that the examiner mailed a first Office action to applicants on October 1, 2003, setting a one month shortened statutory period for reply and setting forth a three way restriction requirement. Applicants replied on December 23, 2003, electing Group I and amending the claims to read on only the elected invention.

The examiner mailed a new Office action to applicants on April 1, 2004, setting a three month shortened statutory period for reply. The examiner set forth several objections to the specification and rejected the pending claims under 35 U.S.C. 101 as directed to non-statutory subject matter and under 35 U.S.C. 112, second paragraph, as indefinite for various reasons. The claims were also rejected under 35 U.S.C. 112, first paragraph, as lacking enablement and written description in the specification. No art rejection was set forth.

Applicants replied on October 1, 2004, by amending claims 13 and 17-29 and adding claims 30-32, claims 1-12 and 14-16 having been canceled. Applicants also replied to each of the rejections appropriately.

The examiner mailed a Final Office action to applicants on January 13, 2005, setting a three month shortened statutory period for reply. The examiner withdrew all previous rejections and objections except the rejection of claim 24 under 35 U.S.C. 112, second paragraph, as indefinite and the rejection of claims 13, 17-24 and 26-32 under 35 U.S.C. 112, first paragraph, as lacking written description and enablement. Claim 25 was indicated as allowable if rewritten in independent form.

Applicants replied on April 11, 2005, by proposing amendments to claims 13, 25 and 27-29, all other claims being canceled previously or by the amendment. Claim 25 was rewritten in independent form. Applicants state that this was done to overcome all rejections.

A new examiner mailed an Advisory action to applicants on July 18, 2005, which failed to indicate that a Notice of Appeal had been filed on July 13, 2005, but did indicate that the amendment would not be entered as it raised new issues requiring further consideration or search. The issues were identified in attached remarks.

This petition followed on August 26, 2005.

DISCUSSION

Applicants' petition requests entry of the amendment after Final action and allowance of the application or reopening of prosecution in view of a new rejection set forth in the Advisory action and refund of the Appeal fee.

A review of the claims presented prior to Final Office action shows that claim 26 was the only independent claim and was directed to an isolated lipocalin comprising 8 strands connected pair-wise by four loops at one end and defining a binding pocket and which corresponded to specific amino acid segments of SEQ ID NO: 20. Claim 25 was a dependent method of making the lipocalin claim depending on claim 26. All other claims depended directly or indirectly on one of these two claims.

The claims presented after Final Office action rewrite claim 25 in independent form incorporating claim 26 in its entirety into the preamble of claim 25 (minor grammatical changes excepted). The previous examiner had indicted that claim 25 would be allowable if rewritten in independent form incorporating all limitations of the claim(s) from which it depends. Claim 25 presented after Final Office action does exactly that. As the Office action was signed by a primary examiner the indication of allowability was binding on the Office absent additional prior art being discovered or some other reason arising to void the indication of allowability.

The Advisory action sets forth two reasons for not entering the amendment: (1) that the term "corresponding to" is indefinite; and (2) that claim 28 is broader that the claim (25) from which it depends. It is noted that claim 28 previously depended from claim 26 and was not rejected as being broader than claim 26. Claim 28 now depends from claim 25 into which claim 26 was incorporated *in toto*. Since it was not rejected as being broader than claim 26 in the previous Office action it cannot be rejected now absent reopening of prosecution. Further, the term "corresponding to" which appeared in previous claim 26, and is now incorporated into claim 25, also was not rejected as indefinite in the previous Office action. To raise such objection to the term now amounts to a new rejection and requires reopening of prosecution.

DECISION

The petition is **GRANTED** to the following extent.

The Advisory action mailed July 18, 2005, is withdrawn. The application is returned to the examiner now of record for reconsideration of the amendment after Final Office action filed April 11, 2005. If, upon reconsideration, the objections raised in the now withdrawn Advisory Action are maintained, a new non-Final Office action must be prepared and mailed to applicants. Alternatively, if the amendment is considered to place the application in condition for allowance the appropriate Notices should be issued. <u>In either event the amendment filed April 11, 2005, will be entered.</u>

Applicants' request for refund of the Notice of Appeal fee cannot be accommodated since the filing of the Notice of Appeal or other action on the part of applicants was required to maintain the application in pending status on July 13, 2005 (the date of filing of the Notice). It is regretted that the delay in promptly responding to applicants' amendment after Final Office action was delayed, but was, in fact, due to the sudden and unexpected resignation of the first examiner.

Applicants are relieved of the requirement for filing an Appeal Brief in view of the requirement of the Office to promptly either allow the application or issue a new non-Final Office action.

Should there be any questions about this decision please contact William R. Dixon, Jr., by letter addressed to Director, TC 1600, at the address listed above, or by telephone at 571-272-0519 or by facsimile sent to the general Office facsimile number 571-273-8300.

George C. Elliott

George C. Elliott
Director, Technology Center 1600

#22

UNDER SECRETARY OF COMMERCE FOR INTELLECTUAL PROPERTY AND
DIRECTOR OF THE UNITED STATES PATENT AND TRADEMARK OFFICE
PO BOX 1450 ALEXANDRIA VA 22313-1450
WWW.USPTO.GOV

JUL 25 2003

Carol L. Francis
Bozicevic, Field & Francis LLP
200 Middlefield Road, Suite 200
Menlo Park, CA 94025

In re Application of	:
Crofts et al	:
Serial No.: 09/509,482	: Decision on Petition
Filed: 15 September 2000	:
Attorney Docket No. 1871-130	:

This letter is in response to the Request for Withdraw of Restriction Requirement mailed 6 March 2002.

BACKGROUND

This application was filed under 35 USC 371 as the national stage filing of PCT/AU98/00817.

In Paper No 7, mailed 10 December 2001, the Examiner restricted the claims into 9 Groups. He neglected to include claim 25 added by preliminary amendment on 15 September 2001 into any of the groupings. Furthermore, he objected to claim 18 as being improperly dependent and therefore did not include claim 18 in the original restriction. Groups I-III were drawn to DNA products comprising SEQ ID NOS. 1, 5 and 6, respectively, Group IV was drawn to a human protein, Group V was drawn to an antibody, Group VI to a transgenic animal, and Group VII-IX drawn to probes and anti-sense molecules complementary to SEQ ID NOS 1, 5 and 6 respectively.

The Examiner reasoned that the Groups I-IX did not have unity of invention because they lack a common utility which is based upon a common structural feature lacking from the prior art. Since the Examiner did not state the statutory basis for this decision, it appears from the record the Examiner was restricting the Application according to 35 USC 121 which is proper for a application filed under 35 USC 111.

In Paper No. 8, filed 11 February 2002, Applicants elected Group I with traverse. The traversal was on the grounds that polynucleotides and the transgenic animal made with the polynucleotides be examined together since the host cells encoding the polynucleotide should not be distinguished from the transgenic animal. In addition,

Applicant traversed the separation of the probes and anti-sense molecules from the encoding polynucleotides as the DNA molecules exists as a duplex in nature and as such share a common structural feature.

In Paper No. 10, mailed 18 April 2002, the Examiner considered the traversal but found it not persuasive. The Examiner argued a serious burden can be demonstrated by the separate classification of transgenic animals and polynucleotides. Further, the Examiner compared probes and coding strand interaction are analogous to receptor-ligand interaction and antibody-antigen interaction and since the nucleic acid probes can be used for a different function from the encoding polynucleotide strand, the two are distinct chemical compounds. The Examiner made the restriction Final.

In Paper No. 21 filed 4 June 2003, Applicants Petitioned under 37 CFR 1.181 to withdraw the Restriction Requirement. The Petition argued that the probes and anti-sense molecules of claims 19-20 be examined together with the appropriate encoding strand polynucleotide. Applicants requested Groups I and VIII, II and VIII, and III and IX be examined together, into three groups instead of 6.

DISCUSSION

The current application was filed under 35 USC 371, so a proper examination of the application would have led the Examiner to restrict the application according to 35 U.S.C. 121 and 372, identify why the groups did not share a special technical feature and therefore lacked unity of invention.

Applicant failed to notice the 35 USC 371 filing status of the Application and did not address their arguments under PCT Rule 13.

In view of facilitating a clear prosecution history the following Lack of Unity requirement on the instantly pending claims is being set forth below:

Restriction is required under 35 U.S.C. 121 and 372.

This application contains the following groups of inventions which are not so linked as to form a single general inventive concept under PCT Rule 13.1.

Group I, claim(s) 1-4, 9-14, 19-24 and 26-29, drawn to polynucleotides encoding a vitamin D receptor comprising exon 1d or a fragment thereof, vectors and host cells expressing said polynucleotides and complementary nucleotides of exon 1d or fragments thereof including probes to exon 1d and antisense molecules to exon 1d.

Group II, claim(s) 5-8, 19-20 and 25, drawn to polynucleotides encoding a vitamin D receptor comprising exon 1f, 1e, or fragments thereof or exons 1f and 1e or fragments thereof, plasmid or expression vectors comprising said polynucleotides and complementary nucleotides of exon 1f, 1e or fragments thereof or 1f and 1e or fragments

thereof including probes to exons 1f or 1e or 1f and 1e and antisense molecules to exons 1f or 1e or 1f and 1e.

Group III, claim 15, drawn to a human vitamin D receptor polypeptide.

Group IV, claim 16, drawn to an antibody to a human vitamin D receptor polypeptide.

Group V. Claim 17, drawn to a transgenic animal with a human vitamin D receptor expressed therein.

Claim 18 as presently recited is an improper dependent claim for not having recited a multiply dependent claim in the alternative. Therefore claim 18 is not included in the current lack of unity.

The special technical feature of Group I is the specific vitamin D isoform comprising exon 1d and probes to that exon 1d.

The special technical feature of Group II is the specific vitamin D isoform comprising exon 1f or 1e or 1f and 1e and probes to exons 1f or 1e or 1e and 1f.

The special technical feature of Group III is a specific polypeptide encoded by a vitamin D receptor polynucleotide .

The special technical of Group IV is an antibody that specifically binds any vitamin D receptor polypeptide.

The special technical feature of Group V is a transgenic animal transformed with a vitamin D receptor polynucleotide.

4. The inventions listed as Groups I-V do not relate to a single general inventive concept under PCT Rule 13.1 because, under PCT Rule 13.2, they lack the same or corresponding special technical features for the following reasons: MacDonald et al., (of record teaches a polynucleotide that encodes for a human vitamin D receptor, thereby teaching Applicant's invention as presently recited in claim 1 and 15. Since Applicant's inventions do not contribute a special technical feature when viewed over the prior art they do not have single general inventive concept and lack unity of invention.

It is noted that the full scope of Applicant's presently recited claim read upon any human vitamin D receptor. The probes and antisense molecules are limited to having unity of invention inasmuch as they hybridize to exons 1d or 1e or 1f or 1e and 1f, since as Applicant has readily admitted in their specification and in Figure 1 that exons 2-9 are identical in all of the prior art and the presently recited vitamin D receptor polynucleotides claimed in claims 1-9 and 19-25.

Applicant has requested rejoinder of claims 19 and 20 with Groups I and II and III, as claims 19 and 20 read upon the polynucleotides encoding a vitamin D receptor comprising exon 1d, Group I, exon 1f, Group II and exon 1e, Group III.

Group I will be examined as it now includes claims 1-4, 9-14, 19-24 and 26-29, drawn to an invention of polynucleotides encoding a vitamin D receptor comprising exon 1d or a fragment thereof, vectors and host cells expressing said polynucleotides and complementary nucleotides of exon 1d or fragments thereof including probes to exon 1d and antisense molecules to exon 1d. The Finality of the Office action mailed 4-22-03 is hereby removed and an action on the new Group of claims will be forthcoming.

DECISION

This request is **GRANTED** for the reasons set forth above.

The application is being forwarded to the examiner for action not inconsistent with this decision.

Should there be any questions with regard to this letter, please contact Special Program Examiner Julie Burke by letter addressed to the Director, Technology Center 1600, Washington DC 20231 or by telephone at (703) 308-7553 or by facsimile transmission at (703) 305-7230.

Jasemine Chambers
TC1600 Group Director

MAR 2 7 2001

COMMISSIONER FOR PATENTS
UNITED STATES PATENT AND TRADEMARK OFFICE
WASHINGTON, D.C. 20231
WWW.USPTO.GOV

Jacobson, Price, Holman & Stern
The Jenifer Building
400 Seventh Street, NW
Washington, DC 20004-2201

In re Application of	:	DECISION ON
FORSSMANN et al.	:	
Application No.: 09/509,559	:	PETITION UNDER
PCT No.: PCT/EP98/06547	:	
Int. Filing Date: 15 October 1998	:	37 CFR 1.47(a)
Priority Date: 15 October 1997	:	
Attorney Docket No.: P65315US0	:	
For: CAHEDRIN DERIVED GROWTH	:	
FACTOR AND ITS USE	:	

This is a decision on applicants' "PETITION UNDER 37 CFR § 1.47(a)" filed in the United States Patent and Trademark Office (USPTO) on 27 November 2000.

BACKGROUND

On 15 October 1998, applicants filed international application PCT/EP98/06547, which claimed a priority date of 15 October 1997. A copy of the international application was communicated to the United States Patent and Trademark Office (USPTO) from the International Bureau on 22 April 1999. A Demand for international preliminary examination, in which the United States was elected, was filed on 07 May 1999, within nineteen months from the priority date. Accordingly, the thirty-month period for paying the basic national fee in the United States expired at midnight on 17 April 2000 (15 April 2000 being a Saturday).

On 14 April 2000, applicants filed a submission for entry into the national stage in the United States which was accompanied by, *inter alia*, the U.S. Basic National Fee and the surcharge for providing the oath or declaration later than thirty months form the priority date.

On 26 May 2000, the USPTO mailed a NOTIFICATION OF MISSING REQUIREMENTS UNDER 35 U.S.C. 371 (Form PCT/DO/EO/905) indicating, *inter alia*, that an oath or declaration of the inventors in compliance with 37 CFR 1.497(a)-(b) was required. The NOTIFICATION set a one-month extendable period for reply.

On 14 June 2000, applicants submitted a "SMALL ENTITY DECLARATION" and a request for refund of the excess fee paid on 14 April 2000.

On 27 November 2000, applicants submitted the instant petition under 37 CFR 1.47(a), which was accompanied by, *inter alia*: an assertion of small entity status; a petition for a five-month extension of time; the fee for a five-month extension of time for a small entity; a declaration executed by all but one of the joint inventors; a declaration of facts by William E. Player.

DISCUSSION

Request for Refund

The request for refund based on establishment as a small entity of the excess amount of the fee paid on 14 April 2000 was timely filed. Note that amended 37 CFR 1.28 (65 FR 54604, Sept. 8, 2000, effective, Sept. 8, 2000) only requires an assertion of small entity status rather than the previously required statements. Accordingly, applicants' request for refund is granted. Deposit Account No. 06-1358 will be credited $485.00.

Petition Under 37 CFR 1.47(a)

A petition under 37 CFR 1.47(a) must be accompanied by: (1) the fee under 37 CFR 1.17(h); (2) factual proof that the missing joint inventor refuses to execute the application or cannot be reached after diligent effort; (3) a statement of the last known address of the missing inventor; and (4) an oath or declaration by each 37 CFR 1.47(a) applicant on his or her own behalf and on behalf of the non-signing joint inventor.

As to (1), the petition fee of $130.00 under 37 CFR 1.17(h) has been charged to Deposit Account 06-1358, as authorized in the Transmittal Letter filed 27 November 2000.

As to (2), sufficient factual proof has been provided that the non-signing joint inventor, Hossein Mostafavi, cannot be reached after diligent effort.

As to (3), the last known address of the non-signing inventor Hossein Mostafavi has been provided.

As to (4), a declaration by each 37 CFR 1.47(a) applicant on his or her own behalf and on behalf of the non-signing joint inventor has been provided. The declaration submitted 27 November 2000 complies with 37 CFR 1.497(a)-(b).

CONCLUSION

For the reasons set forth above, the request for refund filed 14 June 2000 is **GRANTED**.

For the reasons set forth above, applicants' petition under 37 CFR 1.47(a) is **GRANTED**.

Any further correspondence with respect to this matter should be addressed to the Assistant Commissioner for Patents, Box PCT, Washington, D.C. 20231, with the contents of this letter marked to the attention of the Office of PCT Legal Affairs.

As provided in 37 CFR 1.47(a), a notice of the filing of this application will be forwarded to the non-signing inventor at his last known address of record.

A notice of the filing of the application under 37 CFR 1.47(a) will be published in the Official Gazette.

This application is being forwarded to the National Stage Processing Branch of the Office of PCT Operations to continue national stage processing of the application, including the accordation of a 35 U.S.C. 371(c) date of **27 November 2000**.

Daniel Stemmer
PCT Legal Examiner
Office of PCT Legal Affairs
Telephone: (703) 308-2066
Facsimile: (703) 308-6459

31 MAR 2000

UNITED STATES DEPARTMENT OF COMMERCE
Patent and Trademark Office

Patent Cooperation Treaty
Legal Office

Address: Assistant Commissioner for Patents
Box PCT
Washington, D.C. 20231

Catherine Polizzi
Morrison & Foerster
755 Page Mill Road
Palo Alto, California 94304-1018

In re Application of LITTLE, Andrew S., et al. U.S. Application No.: 09/509,591 PCT No.: PCT/US98/04084 International Filing Date: 03 March 1998 Priority Date: 03 March 1997 Attorney's Docket No.: 348022000420 For: ADENOVIRUS VECTORS SPECIFIC FOR CELLS EXPRESSING ALPHA-FETOPROTEIN AND METHODS OF USE THEREOF	DECISION ON PETITION FOR FILING DATE UNDER 37 CFR 1.10(e)

This decision is issued in response to applicants' "Petition For A Filing Date Under 37 CFR 1.10(e)" filed on 07 March 2000. No petition fee is required.

BACKGROUND

On 03 March 1998, applicants filed international application PCT/US98/04084 which claimed a priority date of 03 March 1997 and which designated the United States.

On 02 October 1998, a Demand was filed with the International Preliminary Examining Authority electing the United States. Because this Demand was filed prior to the expiration of 19 months from the priority date. As a result, the deadline for submission of a copy of the international application (unless previously communicated by the International Bureau) and payment of the basic national fee was extended to expire 30 months from the priority date, i.e., 03 September 1999.

On 03 September 1999, applicants allege that they filed via "Express Mail" a transmittal letter for entry into the national stage in the United States accompanied by: (1) an unsigned declaration of inventors; and (2) a preliminary amendment. The transmittal letter noted that a copy of the international application was not required because the application was filed in the United States Receiving Office. The transmittal letter also authorized a charge to Deposit Account No. 03-1952 for any required fees.

On 07 March 2000, applicants filed the "Petition For A Filing Date Under 37 CFR 1.10(e)" considered herein.

DISCUSSION

A. Petition Under 37 CFR 1.10(e)

37 CFR 1.10(e) states:

(e) Any person mailing correspondence addressed as set out in § 1.1(a) to the Office with sufficient postage utilizing the "Express Mail Post Office to Addressee" service of the USPS, but not received by the Office, may petition the Commissioner to consider such correspondence filed in the Office on the USPS deposit date, provided that:

(1) The petition is filed promptly after the person becomes aware that the Office has no evidence of receipt of the correspondence;

(2) The number of the "Express Mail" mailing label was placed on the paper(s) or fee(s) that constitute the correspondence prior to the original mailing by "Express Mail";

(3) The petition includes a copy of the originally deposited paper(s) or fee(s) that constitute the correspondence showing the number of the "Express Mail" mailing label thereon, a copy of any returned postcard receipt, a copy of the "Express Mail" mailing label showing the "date-in," a copy of any other official notation by the USPS relied upon to show the date of deposit, and, if the requested filing date is a date other than the "date-in" on the "Express Mail" mailing label or other official notation entered by the USPS, a showing pursuant to paragraph (d)(3) of this section that the requested filing date was the date the correspondence was deposited in "Express Mail Post Office to Addressee" service prior to the last scheduled pickup for that day; and

(4) The petition includes a statement which establishes, to the satisfaction of the Commissioner, the original deposit of the correspondence, and that the copies of the correspondence, the copy of the "Express Mail" mailing label, the copy of any returned postcard receipt, and any official notation entered by the USPS are true copies of the originally mailed correspondence and original "Express Mail" mailing label, returned postcard receipt, and official notation entered by the USPS. Such statement must be a verified statement if made by a person other than a practitioner as defined in § 10.1(r) of this chapter.

Regarding item (1) above, the Petition states that applicants initiated communication with the United States Patent and Trademark Office ("USPTO") regarding receipt of this application on 20 October 1999, less than two months after the alleged filing. The Petition also states that such communications continued up until the filing of the present Petition. Under these circumstances, it is concluded that applicants acted promptly in filing the Petition. Item (1) above is satisfied.

Regarding item (2), the transmittal letter and the preliminary amendment both contain the Express Mail Label No. EL034669783US. Item (2) above is satisfied.

As for item (3), the Petition states that copies of all the documents deposited with the USPS Express Mail service on 03 September 1999 are attached to the Petition. As noted above, these documents set forth Express Mail Label No. EL034669783US. Attached to the Petition is a copy of the Express Mail receipt bearing this same label number and a "Date In" of 03 September 1999. Thus, item (3) above is satisfied.

Finally, the statements contained in the Petition, and the attachments thereto, are sufficient to satisfy item (4) above. Accordingly, all of the required elements of a grantable petition under 37 CFR 1.10(e) have been met. It is therefore concluded that the materials attached to the present Petition were filed with the USPTO on 03 September 1999.

B. <u>Fee Issues</u>

Applicants have submitted a $130 petition fee with this present Petition. A petition fee is not required. Accordingly, Deposit Account No. 03-1952 will be refunded this amount.

With respect to the basic national fee, the transmittal letter filed on 03 September 1999 authorizes a charge to Deposit Account No. 03-1952 for required fees. The fee calculation column on page two of the transmittal letter contains a mathematical error; it also assumes small entity status, although no small entity statement has been submitted, and applies the wrong basic national fee. Accordingly, the fee calculation contained in the transmittal letter will not be applied here.

A review of the file shows that the appropriate fee here is $1,132. This total consists of: $840 for the basic national fee, $130 as the fee for filing the declaration of inventors, and $162 as the fee for including 29 total claims. Deposit Account No. 03-1952 has been charged this amount.

CONCLUSION

The Petition For A Filing Date Under 37 CFR 1.10(e) is **GRANTED.** The documents attached to the Petition are accepted as having been filed on 03 September 1999.

A national stage file has been created for this application with United States application number 09/509,591. The International Bureau documents for this application have been placed in this file, and the file is being forwarded to the National Stage Processing Branch of the International Division for further processing in accord with this decision, including the issuance of a Notification Of Missing Requirements (Form PCT/DO/EO/905) requiring submission of an executed oath or declaration of the inventors.

Leonard Smith
PCT Legal Examiner
PCT Legal Office

Richard M. Ross
PCT Petitions Attorney
PCT Legal Office
Telephone: (703) 308-6155
Facsimile: (703) 308-6459

RMR/LS:rmr

UNITED STATES PATENT AND TRADEMARK OFFICE

Commissioner for Patents
United States Patent and Trademark Office
P.O. Box 1450
Alexandria, VA 22313-1450
www.uspto.gov

May 15, 2006
Patent No. : 7,011,976 B1
Ser. No. : 09/509,591
Inventor(s) : Andrew S. Little, et al.
Issued : March 14, 2006
Title : **ADENOVIRUS VECTORS SPECIFIC FOR CELLS EXPRESSING ALPHA-FETOPROTEIN AND METHODS OF USE THEREOF**
Docket No. : **CELL-006CIP**

Re: Request for Certificate of Correction

Consideration has been given your request for the issuance of a certificate of correction for the above-identified patent under the provisions of Rule(s) 1.322 and/or 1.323.

Assignees' names and addresses (assignment data) printed in a patent, are based *solely* on information supplied in the appropriate space for identifying the assignment data, i.e., item 3 of the Issue Fee Transmittal Form PTOL-85B. Granting of a request under 37 CFR 3.81(b) is required to correct applicant's error providing ***incorrect or erroneous*** assignment data, *before* issuance of a Certificate of Correction, under 37 CFR 1.323 *(see Manual of Patent Examining Procedures (M.P.E.P) Chp.1400, sect. 1481).* This procedure is required *at any time after the issue fee is paid*, including after issuance of the patent.

In view of the foregoing, your request, in this mater, is hereby denied.

A request to correct the Assignee under 37 CFR 3.81(b) should include:

A. **the processing fee set forth in 37 CFR 1.117(h) (currently $130);**
B. a statement that the failure to include the correct assignee name on the PTOL-85B was inadvertent; and
C. a copy of the Notice of Recordation of Assignment Document, reflecting the reel and frame number where the assignment(s) is recorded and/or reflecting proof of *the date* the assignment was submitted for recordation.

In the Request, Applicant(s) may request that the file be forwarded to Certificates of Correction Branch, for issuance of a Certificate of Correction, if the Request is granted.

Any request under 37 CFR 3.81(b) should be directed to the following address or facsimile number:

By mail: Mail Stop PETITIONS
Commissioner for Patents
Post Office Box 1450
Alexandria, VA 22313-1450

By hand: Customer Service Window
Mail Stop Petitions
Randolph Building
401 Dulany Street
Alexandria, VA 22314

By fax: (703) 872-9306
ATTN: Office of Petitions

If a fee (currently $100) was previously submitted for consideration of a Request for Certificate of Correction, under CFR 1.323, to correct assignment data, , no additional fee is required.

Antonio Johnson
For Cecelia Newman
Decisions & Certificates
of Correction Branch
(703) 308-9390 ext. 111 or (703) 308-8309

Linda R. Judge
DLA PIPER RUDNICK GRAY CARY US LLP
153 TOWNSEND STREET – SUITE 800
SAN FRANCISCO, CA 94107

UNITED STATES PATENT AND TRADEMARK OFFICE

COMMISSIONER FOR PATENTS
UNITED STATES PATENT AND TRADEMARK OFFICE
P.O. BOX 1450
ALEXANDRIA, VA 22313-1450
www.uspto.gov

DLA PIPER RUDNICK GRAY CARY US, LLP
153 TOWNSEND STREET
SUITE 800
SAN FRANCISCO, CA 94107-1907

COPY MAILED
AUG 1 1 2006
OFFICE OF PETITIONS

In re Patent No. 7,011,976	:	
Issue Date : March 14, 2006	:	
Application No. 09/509,591	:	DECISION ON PETITION
Filed: June 2, 2000	:	
Patentee(s): Andrew S. Little, et. al.	:	

This is a decision on the petition under 37 CFR 1.183 filed by facsimile transmission on June 13, 2006, which is being treated as a request under 37 CFR 3.81(b)[1] to correct the assignee data on the front page of the above-identified patent by way of a certificate of correction.

The petition is **dismissed**.

Petitioner requests issuance of a Certificate of Correction in the name of "Cell Genesys, Inc., South San Francisco, CA." However, Office PALM computer database assignment records do not reflect that an assignment in the name of "Cell Genesys, Inc., South San Francisco, CA" was ever recorded. 37 CFR 3.81(a) permits the patent to issue to the assignee, provided that, at the time the issue fee is paid, the name of an assignee is provided. 37 CFR 3.81(b) permits the patent to issue in the name of an assignee if the assignment was submitted after payment of the issue fee but ***prior to issuance of a patent***. Since there is no assignment and no assignment fee recorded with the Patent and Trademark Office, prior to issuance, in the name of "Cell Genesys, Inc., South San Francisco, CA", a Certificate of Correction would not be in order. *See* MPEP Section 307. However, petitioner is entitled to receive a Certificate of Correction in the name of "Cell Genesys, Inc., Foster City, CA," as recorded in the Patent and Trademark Office at reel 012243 and frame number 0012, provided that a renewed petition and corrected Certificate of Correction form PTO/SB/44 is submitted. No further fees are required for the renewed petition or Certificate of Correction.

This application file is being referred to Files Repository.

Inquiries concerning this decision should be directed to the undersigned at (571) 272-3226.

Andrea Smith
Petitions Examiner
Office of Petitions

[1] *See* Official Gazette of June 22, 2004

UNITED STATES PATENT AND TRADEMARK OFFICE

Commissioner for Patents
United States Patent and Trademark Office
P.O. Box 1450
Alexandria, VA 22313-1450
www.uspto.gov

DLA PIPER RUDNICK GRAY CARY US, LLP
153 TOWNSEND STREET
SUITE 800
SAN FRANCISCO, CA 94107-1907

COPY MAILED

NOV 2 0 2006

OFFICE OF PETITIONS

In re Patent No. 7,011,976 :
Issue Date : March 14, 2006 :
Application No. 09/509,591 : DECISION ON PETITION
Filed: June 2, 2000 :
Patentee(s): Andrew S. Little, et. al. :

This is a decision on the renewed petition under 37 CFR 1.183 filed by facsimile transmission on September 1, 2006, which is being treated as a request under 37 CFR 3.81(b)[1] to correct the assignee's name and data on the front page of the above-identified patent by way of a certificate of correction.

The petition is again **DISMISSED**.

Petitioner requests issuance of a Certificate of Correction in the name of "Cell Genesys, Inc., **South San Francisco, CA**," instead of "Cell Genesys, Inc., **Foster City, CA,"** because the assignee has since moved. 37 CFR 3.81(a) permits the patent to issue to the assignee, provided that, at the time the issue fee is paid, the name of an assignee is provided. 37 CFR 3.81(b) permits the patent to issue in the name of an assignee if the assignment was submitted after payment of the issue fee, but recorded ***prior to issuance of a patent***.

Since there is no assignment, recorded prior to issuance of this patent, that shows the assignee's data as "**South San Francisco, CA**", a certificate of correction is not proper. However, petitioner is entitled to receive a Certificate of Correction in the name of "Cell Genesys, Inc., **Foster City, CA**," as recorded prior to issuance, at reel 012243 and frame number 0012.

Should petitioner desire to receive a Certificate of Correction in the name of the assignee and data as "Cell Genesys, Inc., **Foster City, CA**," a renewed petition and corrected Certificate of Correction form PTO/SB/44 must be submitted.

This application file is being referred to Files Repository.

Inquiries concerning this decision should be directed to the undersigned at (571) 272-3226.

Andrea Smith
Petitions Examiner
Office of Petitions

---

[1] *See* Official Gazette of June 22, 2004

UNITED STATES PATENT AND TRADEMARK OFFICE

Commissioner for Patents
United States Patent and Trademark Office
P.O. Box 1450
Alexandria, VA 22313-1450
www.uspto.gov

COPY MAILED

JUL 19 2007

OFFICE OF PETITIONS

DLA PIPER RUDNICK GRAY CARY US, LLP
153 TOWNSEND STREET
SUITE 800
SAN FRANCISCO, CA 94107-1907

In re Patent No. 7,011,976 :
Issue Date : March 14, 2006 :
Application No. 09/509,591 : DECISION ON PETITION
Filed: June 2, 2000 :
Patentee(s): Andrew S. Little, et. al. :

This is a decision on the request for Certificate of Correction filed by facsimile transmission on December 14, 2006 and on March 23, 2007, which is being treated as a renewed request under 37 CFR 3.81(b)[1] to correct the assignee's name and data on the front page of the above-identified patent by way of a certificate of correction.

The petition is **GRANTED**.

A Certificate of Correction in the name of "**Cell Genesys, Inc., Foster City, CA**," will be issued, in accordance with the assignment recorded in the USPTO, prior to issuance, at reel 012243 and frame number 0012.

The Certificates of Correction Branch will be notified of this decision granting the petition under 37 CFR 3.81(b) and directing issuance of the requested Certificate of Correction.

Telephone inquiries concerning this decision may be directed to the undersigned at (571) 272-3226. Inquiries regarding the issuance of a Certificate of Correction should be directed to the Certificates of Correction Branch at (703) 305-8309.

Andrea Smith
Petitions Examiner
Office of Petitions

[1] *See* Official Gazette of June 22, 2004

UNITED STATES PATENT AND TRADEMARK OFFICE

Under Secretary of Commerce for Intellectual Property and
Director of the United States Patent and Trademark Office
Washington, D.C. 20231
www.uspto.gov

Paper No. 25

OLIFF & BERRIDGE, PLC
P.O. BOX 19928
ALEXANDRIA VA 22320

COPY MAILED

NOV 2 2 2002

OFFICE OF PETITIONS

In re Application of
Akihiro Murata et al
Application No. 09/509,669
Filed: April 4, 2000
Attorney Docket No. 105895

ON PETITION

This is a decision on the petition, filed November 21, 2002, under 37 CFR 1.313(c)(2) to withdraw the above-identified application from issue after payment of the issue fee.

The petition is **GRANTED**.

The above-identified application is withdrawn from issue for consideration of a submission under 37 CFR 1.114 (request for continued examination). See 37 CFR 1.313(c)(2).

Petitioner is advised that the issue fee paid on October 22, 2002 in the above-identified application cannot be refunded. If, however, the above-identified application is again allowed, petitioner may request that it be applied towards the issue fee required by the new Notice of Allowance.[1]

Telephone inquiries should be directed to the undersigned at (703) 305-8859.

After receipt of the file in the Office of Petitions, the application will be forwarded to Technology Center AU 2872 for processing of the request for continued examination under 37 CFR 1.114.

Karen Creasy

Karen Creasy
Petitions Examiner
Office of Petitions
Office of the Deputy Commissioner
for Patent Examination Policy

---

[1] The request to apply the issue fee to the new Notice must be made in writing and should be accompanied by the new Issue Fee Transmittal Form PTOL-85(b), along with a copy of this decision. Additionally, if the issue fee has increased from the previously paid issue fee, the balance due must be submitted. **Failure to *timely* request *in writing* that the previously paid issue fee be applied towards the new Notice and payment of any balance due will result in the abandonment of the application.**

UNITED STATES PATENT AND TRADEMARK OFFICE

Commissioner for Patents
United States Patent and Trademark Office
P.O. Box 1450
Alexandria, VA 22313-1450
www.uspto.gov

YOUNG & THOMPSON
745 SOUTH 23RD STREET
2ND FLOOR
ARLINGTON, VA 22202

COPY MAILED
AUG 0 8 2006
OFFICE OF PETITIONS

In re Patent No. 6,984,520	:	
Issue Date: January 10, 2006	:	
Application No. 09/509,687	:	NOTICE
Filed: April 19, 2000	:	
Patentee(s): Marian Elizabeth Ludgate	:	

This is a notice regarding your request for acceptance of a fee deficiency submission under 37 CFR 1.28, filed March 7, 2006. On September 1, 1998, the Court of Appeals for the Federal Circuit held that 37 CFR 1.28(c) is the sole provision governing the time for correction of the erroneous payment of the issue fee as a small entity. **See DH Technology v. Synergystex International, Inc. 154 F.3d 1333, 47 USPQ2d 1865 (Fed. Cir. Sept. 1, 1998).**

The Office no longer investigates or rejects original or reissue applications under 37 CFR 1.56. **1098 Off. Gaz. Pat. Office 502 (January 3, 1989).** Therefore, nothing in this Notice is intended to imply that an investigation was done.

Your fee deficiency submission under 37 CFR 1.28 is hereby **ACCEPTED**.

This patent is no longer entitled to small entity status. Accordingly, all future fees paid must be paid at the large entity rate.

Inquiries related to this communication should be directed to the undersigned at (571) 272-3226.

Andrea Smith
Petitions Examiner
Office of Petitions

UNITED STATES
PATENT AND
TRADEMARK OFFICE

UNDER SECRETARY OF COMMERCE FOR INTELLECTUAL PROPERTY
AND DIRECTOR OF THE UNITED STATES PATENT AND TRADEMARK OFFICE
WASHINGTON, D.C. 20231
WWW.USPTO.GOV

#13

APR - 9 2002

BIRCH, STEWART, KOLASCH & BIRCH
P. O. BOX 747
FALLS CHURCH, VA 22040-0747

In re Application of	:
Kazutoh Takesako et al	:
Serial No.: 09/509,744	: PETITION DECISION
Filed: March 31, 2000	:
Attorney Docket No.: 1422-0418P	:

This is a decision on the petition under 37 CFR 1.181, filed February 19, 2003, to require the examiner to enter a proposed amendment after Final rejection.

BACKGROUND

A review of the file history shows that this application is the National Phase entry of PCT/JP98/04326 and was accepted as complete on March 31, 2000. The examiner in a first Office action set forth a restriction/lack of unity requirement dividing the claims into 19 groups and indicating that certain claims were considered to be linking claims. Applicants in reply elected Group I with traverse.

On January 30, 2002, the examiner mailed an Office action to applicants responding to the traversal of the restriction requirement, but maintaining it and indicating that claims 1-7, 9-12 and 14 were being examined as they related to SEQ ID NO. 1 and 10. The examiner rejected claims 2-3, 5-7, 11-12 and 14 under 35 U.S.C. 112, first paragraph, for lack of enablement with respect to the modified amino acids. Claims 1, 3 and 9-10 were rejected under 35 U.S.C. 101 as directed to non-statutory subject matter. Claims 1-7, 9-12 and 14 were rejected under 35 U.S.C. 112, second paragraph, as indefinite with explanations of the problems. Claims 5-7, 11-12 and 14 were rejected under 35 U.S.C. 102(b) as anticipated by Alber et al. Claims 1, 3-4, 6-7, 9-12 and 14 were rejected under 35 U.S.C. 102(b) as anticipated by Bernie et al. Claims 1, 3 and 9-10 were rejected as anticipated by Stockbine et al and by Ito et al. Claims 4, 6-7, 12 and 14 were rejected under 35 U.S.C. 102(e) as anticipated by Berlin et al. Applicants replied on July 1, 2002, amending several paragraphs of the specification and amending claims 1, 3, 6 and 8-14 and adding claims 15-20.

The examiner mailed a Final Office action to applicants on September 18, 2002, withdrawing a number of rejections. Claims 1, 3-6, 9-12 and 14-20 were, however, rejected under 35 U.S.C. 112, second paragraph, as indefinite, including an objection to the use of a trademark in the claims as undesirable and/or improper. All rejections over prior art were withdrawn. The action was made Final. Applicants replied with an amendment after final rejection in which amendments to

the specification were proposed to capitalize all trademarks or tradenames and to claims 1, 4, 7, 9-10 and 15-20. The amendments also proposed limitations in the claims to define "stringent conditions" which included the use of trademarks or tradenames already in other claims. By Advisory Action mailed January 7, 2003, the examiner refused entry of the amendment as presenting new issues requiring further consideration and/or search and not placing the application in better form for appeal. The examiner specifically stated "the addition of a trademark "FICOLL 400" to claims 1 and 4 raised new issues that would require further consideration. Applicants filed this petition on February 19, 2003, requesting that the amendment be entered.

DISCUSSION

Initially it is noted that the Final Office action contained no rejections over prior art, thus indicating that the claims *prima facie* define over the prior art. The only rejections made were for indefiniteness in the claims and several terms (e.g. - stringent conditions) were specifically identified as being indefinite as well as the above noted rejection/objection to the use of a trademark in the claims. Applicants' amendment addresses each of these objections. All claims reciting "stringent conditions" were amended to define the conditions which amendment included the use of the trademark "FICOLL 400" (properly identified as a trademark) by adding the limitations found in claims 19 and/or 20. It is noted that FICOLL 400 appears in claims 19 and 20 of the previous amendment as part of the stringent conditions definition. Since applicants addressed all of the points of indefiniteness set forth by the examiner if the Final Office action and corrected or attempted to correct them, the amendment, *prima facie*, reduces the number of issues/rejections for appeal, thus placing the application in better form for appeal. The only possible rejection/objection remaining is with respect to the use of a trademark/tradename in the claims. Where possible this should be avoided and a generic descriptive term should be used. That is "FICOLL 400" should be identified in the specification as a " neutral highly branched polymer of sucrose" (if that is an accurate description thereof) and that term, or an equivalent, be used in the claims. Applicants are encouraged to make such further amendments to the claims and specification, as appropriate.

DECISION

Applicants' petition is **GRANTED.**

The examiner is directed to enter the amendment filed December 18, 2002, and take further action, as appropriate (new Advisory action or allowance, etc.).

Should there be any questions with respect to this decision, please contact William R. Dixon, Jr., by mail addressed to: Director, Technology Center 1600, Washington, D.C. 20231, or by telephone at (703)308-3824 or by facsimile transmission at (703) 305-7230.

Jasemine C. Chambers

Jasemine C. Chambers
Director, Technology Center 1600

UNITED STATES PATENT AND TRADEMARK OFFICE

COMMISSIONER FOR PATENTS
UNITED STATES PATENT AND TRADEMARK OFFICE
P.O. BOX 1450
ALEXANDRIA, VA 22313-1450
www.uspto.gov

Paper No. 19

BIRCH STEWART KOLASCH & BIRCH
PO BOX 747
FALLS CHURCH, VA 22040-0747

COPY MAILED

JAN 1 6 2004

OFFICE OF PETITIONS

In re Application of

Takesako, et al.

Application No. 09/509,744

Filed: March 31, 2000

Attorney Docket No. 1422-418P

DECISION ON PETITION

This is a decision on the petition under 37 CFR 1.137(b), filed November 19, 2003, to revive the above-identified application.

The petition is **GRANTED**.

The above-cited application became abandoned for failure to file a timely brief after the Notice of Appeal filed March 18, 2003. Accordingly, the application became abandoned on May 19, 2003.

The request for extension of time within the fifth month is noted, but cannot be granted because the request was made outside the maximum period for reply. Petitioner is given two months from the filing of a Notice of Appeal to file an appeal brief. Petitioner may purchase an additional five months to file the brief, if necessary. The maximum period for filing an appeal brief, therefore, expired on October 19, 2003. Petitioner will be refunded $2,010.00, in due course.

The Request for Continued Examination filed November 19, 2003, filed is noted and made of record.

The application is being forwarded to Technology Center 1600 for further processing.

Telephone inquiries concerning this decision should be directed to the undersigned at (703) 305-0010.

Kenya A. McLaughlin
Petitions Attorney
Office of Petitions

UNITED STATES PATENT AND TRADEMARK OFFICE

Commissioner for Patents
United States Patent and Trademark Office
P.O. Box 1450
Alexandria, VA 22313-1450
www.uspto.gov

COPY MAILED

SEP 12 2005

OFFICE OF PETITIONS

BIRCH STEWART KOLASCH & BIRCH
P.O. BOX 747
FALLS CHURCH VA 22040-0747

In re Application of	:	
Kazutoh Takesako et al	:	
Application No. 09/509,744	:	ON PETITION
Filed: March 31, 2000	:	
Attorney Docket No. 1422-418P	:	

This is a decision on the petition, filed September 12, 2005, under 37 CFR 1.313(c)(2) to withdraw the above-identified application from issue after payment of the issue fee.

The petition is **GRANTED**.

The above-identified application is withdrawn from issue for consideration of a submission under 37 CFR 1.114 (request for continued examination). See 37 CFR 1.313(c)(2).

Petitioner is advised that the issue fee paid on April 7, 2005 in the above-identified application cannot be refunded. If, however, the above-identified application is again allowed, petitioner may request that it be applied towards the issue fee required by the new Notice of Allowance.[1]

Telephone inquiries should be directed to the undersigned at (571) 272-3208.

The examiner of Technology Center AU 1645 will consider the request for continued examination under 37 CFR 1.114.

Karen Creasy

Karen Creasy
Petitions Examiner
Office of Petitions
Office of the Deputy Commissioner
for Patent Examination Policy

---

[1] The request to apply the issue fee to the new Notice may be satisfied by completing and returning the new Issue Fee Transmittal Form PTOL-85(b), which includes the following language thereon: "Commissioner for Patents is requested to apply the Issue Fee and Publication Fee (if any) or re-apply any previously paid issue fee to the application identified above." Petitioner is advised that, whether a fee is indicated as being due or not, the Issue Fee Transmittal Form **must** be completed and timely submitted to avoid abandonment. Note the language in bold text on the first page of the Notice of Allowance and Fee(s) Due (PTOL-85).

UNITED STATES PATENT AND TRADEMARK OFFICE

COMMISSIONER FOR PATENTS
UNITED STATES PATENT AND TRADEMARK OFFICE
P.O. BOX 1450
ALEXANDRIA, VA 22313-1450
www.uspto.gov

Paper No. _____

Date : September 12, 2005

TO : Director, Office of Patent Publication

FROM : Office of the Deputy Commissioner
for Patent Examination Policy

SUBJECT : Withdrawal from Issue of

Applicant(s) :Kazutoh Takesako et al
Application No. :09/509,744
Filed :March 31, 2000

The above-identified application has been assigned Patent No. 6,942,867 and an issue date of September 13, 2005.

It is hereby directed that this application be withdrawn from issue at the request of the applicant.

Do not refund the issue fee.

The following erratum should be published in the Official Gazette if the above-identified application is published in the OG of September 13, 2005:

"All reference to Patent No. 6,942,867 to Kazutoh Takesako et al of Japan for ANTIGEN PROTEIN AND NUCLEIC ACID CODING FOR SAID PROTEIN appearing in the Official Gazette of September 13, 2005 should be deleted since no patent was granted."

Karen Creasy

Karen Creasy
Petitions Examiner
Office of Petitions
Office of the Deputy Commissioner
for Patent Examination Policy

cc: Paul Harrison, MDW-4B03,(FAX-273-5468)
Deneise Boyd, MDE-3D39 (FAX-273-5124)
Mary Louise McAskill, ST-8C15 (FAX 305-4372)
Niomi Farmer, ST-8C14 (FAX-305-4372)
Mary E. Johnson (Cookie), MDE-7C71 (FAX 273-0038
Duane Davis P/OPC MDE-7D89
Tamara Greene, ST-8C13

UNITED STATES
PATENT AND
TRADEMARK OFFICE

UNDER SECRETARY OF COMMERCE FOR INTELLECTUAL PROPERTY
AND DIRECTOR OF THE UNITED STATES PATENT AND TRADEMARK OFFICE
WASHINGTON, D.C. 20231
WWW.USPTO.GOV

MAR - 7 2002

#11

STERNE KESSLER GOLDSTEIN & FOX
1100 NEW YORK AVENUE NW SUITE 600
WASHINGTON DC 20005-3934

In re Application of
Ivo R. Buschmann et al
Serial No.: 09/509,764
Filed: October 16, 2000
Attorney Docket No.: 8172

: PETITION DECISION TO RESTART
: PERIOD FOR REPLY

This is in response to applicants' petition under 37 CFR § 1.181, filed February 20, 2002, requesting restarting of the period for reply.

A review of the file history shows the examiner mailed an Office action to applicants on December 6, 2001, setting a three month shortened statutory period for reply. Applicants state that they did not receive the Notice until January 22, 2002, more than one month after the mail date thereof,. Applicants' statement and evidence are acceptable and the period for reply will be adjusted accordingly.

Applicants' petition is **GRANTED**.

The period for reply to the Office action mailed December 6, 2001, is hereby restarted as of applicants' date of receipt, January 22, 2002. The time period for reply remains as set therein.

Should there be any questions regarding this decision, please contact William R. Dixon, Jr., by mail addressed to Director, Technology Center 1600, Washington, D.C. 20231, or by telephone at (703) 308-3824 or by facsimile transmission at (703) 305-7230.

John Doll
Director, Technology Center 1600

17 JUL 200

UNITED STATES PATENT AND TRADEMARK OFFICE

#5

Commissioner for Patents
United States Patent and Trademark Office
Washington, D.C. 20231
www.uspto.gov

Antonelli, Terry, Stout & Kraus
Suite 1800
1300 North Seventeenth Street
Arlington, VA 22209

In re Application of IDE et al	:	
U.S. Application No.: 09/509,768	:	DECISION
Int. Application No.: PCT/JP99/04790	:	
Int. Filing Date: 03 September 1999	:	
Attorney Docket No.: 501.38383X00	:	
For: DYNAMO-ELECTRIC MACHINE	:	

This is in response to applicant's "Renewed Request for Status under 37 CFR 1.42" filed 20 May 2002.

BACKGROUND

On 03 September 1999, applicant filed international application PCT/JP99/04790. A copy of the international application was communicated to the USPTO from the International Bureau on 15 March 2001. A Demand for international preliminary examination, in which the United States was elected, was filed on 13 October 1999, prior to the expiration of nineteen months from the filing date. Accordingly, the thirty-month period for paying the basic national fee in the United States expired at midnight on 04 March 2002 (03 March 2002 was a Sunday).

On 31 March 2000, applicant filed national stage papers in the United States Designated/Elected Office (DO/EO/US). The submission was accompanied by, *inter alia*, the basic national fee required by 35 U.S.C. 371(c)(1) and a declaration executed by seven of the eight joint inventors. The declaration is also executed by an heiress of inventor Mitsunori Yamashina, who according to the declaration is deceased.

On 19 March 2002, this Office mailed a decision dismissing the 31 March 2000 request for status.

On 20 May 2002, applicant filed the present renewed request for status.

DISCUSSION

37 CFR 1.42 provides, "In case of the death of the inventor, the legal representative (executor, administrator, etc.) of the deceased inventor may make the necessary oath or declaration, and apply for and obtain the patent."

In the present case, the declaration filed 31 March 2000 is signed by the legal representative of Mitsunori Yamashina.

CONCLUSION

The declaration filed 31 March 2000 is ACCEPTED under 37 CFR 1.42.

The application has an International Filing Date of 03 September 1999 and a date under 35 U.S.C. 371(c) of 31 March 2000.

This application is being forwarded to the United States Designated/Elected Office (DO/EO/US) for further processing in accordance with this decision.

Bryan Tung
PCT Legal Examiner
PCT Legal Office

Telephone: 703-308-6614
Facsimile: 703-308-6459

MAR 1 9 2002

#3

UNITED STATES PATENT AND TRADEMARK OFFICE

Commissioner for Patents
United States Patent and Trademark Office
Washington, D.C. 20231
www.uspto.gov

Antonelli, Terry, Stout & Kraus
Suite 1800
1300 North Seventeenth Street
Arlington, VA 22209

In re Application of IDE et al	:	
U.S. Application No.: 09/509,768	:	DECISION
Int. Application No.: PCT/JP99/04790	:	
Int. Filing Date: 03 September 1999	:	
Attorney Docket No.: 501.38383X00	:	
For: DYNAMO-ELECTRIC MACHINE	:	

This is in response to the papers filed 31 March 2000, which is being treated as a request for status under 37 CFR 1.42.

BACKGROUND

On 03 September 1999, applicant filed international application PCT/JP99/04790. A copy of the international application was communicated to the USPTO from the International Bureau on 15 March 2001. A Demand for international preliminary examination, in which the United States was elected, was filed on 13 October 1999, prior to the expiration of nineteen months from the filing date. Accordingly, the thirty-month period for paying the basic national fee in the United States expired at midnight on 04 March 2002 (03 March 2002 was a Sunday).

On 31 March 2000, applicant filed national stage papers in the United States Designated/Elected Office (DO/EO/US). The submission was accompanied by, *inter alia*, the basic national fee required by 35 U.S.C. 371(c)(1) and a declaration executed by seven of the eight joint inventors. The declaration is also executed by an heiress of inventor Mitsunori Yamashina, who according to the declaration is deceased.

DISCUSSION

37 CFR 1.42 provides, "In case of the death of the inventor, the legal representative (executor, administrator, etc.) of the deceased inventor may make the necessary oath or declaration, and apply for and obtain the patent."

In the present case, the declaration filed 31 March 2000 is signed by an heiress of Mitsunori Yamashina. The declaration is not acceptable because there is no indication that Yoko Yamashina is the sole heir of deceased inventor. That is, there may be other heirs who are also required to sign the declaration.

Applicant is advised that the submission of a declaration executed by the heir(s) of a deceased inventor is hereby construed as an indication that no legal representative of the deceased's estate has been appointed and that no legal representative is required by the applicable law to be appointed, and thus the heir(s) is/are signing as the legal representative of the estate. If this interpretation is incorrect, applicant is required to promptly notify the Office of such and to submit a declaration properly executed by the legal representative of the deceased inventor in response to this decision.

CONCLUSION

For the reasons above, the request for status under 37 CFR 1.42 is DISMISSED without prejudice.

If reconsideration on the merits of this decision is desired, a proper response must be filed within TWO (2) MONTHS from the mail date of this decision. Failure to timely file a proper response will result in ABANDONMENT of the application. Any reconsideration request should include a cover letter entitled "Renewed Request for Status Under 37 CFR 1.42" No petition fee is required. Extensions of time are available pursuant to 37 CFR 1.136.

Please direct further correspondence with respect to this matter to the Commissioner for Patents, Box PCT, Washington, D.C. 20231, and address the contents of the letter to the attention of the PCT Legal Office.

Bryan Tung
PCT Legal Examiner
PCT Legal Office

Telephone: 703-308-6614
Facsimile: 703-308-6459

UNITED STATES DEPARTMENT OF COMMERCE
Patent and Trademark Office

Patent Cooperation Treaty
Legal Office

Address: Assistant Commissioner for Patents
Box PCT
Washington, D.C. 20231

JUL 31 2000

Paula D. Morris & Associates
2925 Briarpark Drive, Suite 930
Houston, Texas 77042-3728

In re Application of	:	
Dearnaley, Geoffrey, et al.	:	
U.S. Application No.: 09/509,849	:	
PCT No.: PCT/US98/18938	:	DECISION ON PETITION
International Filing Date: 11 September 1998	:	TO REVIVE ABANDONED
Priority Date: 11 September 1997	:	APPLICATION UNDER 37
Attorney's Docket No.: GORE/MI/PCT/US	:	CFR 1.137(b)
For: A METHOD OF DEPOSITING AN	:	
ELECTROCATALYST AND ELECTRODES	:	
FORMED BY SUCH METHOD	:	

This decision is issued in response to applicants' "Petition For Revival Of An International Application For Patent Designating The U.S. Abandoned Unintentionally Under 37 CFR 1.137(b)" filed on 03 April 2000. Applicant has paid the required petition fee.

BACKGROUND

On 11 September 1998, applicants filed international application PCT/US98/18938 which claimed a priority date of 11 September 1997 and which designated the United States.

On 09 April 1999, a Demand was filed with the International Preliminary Examining Authority electing the United States. The election was made prior to the expiration of 19 months from the priority date. As a result, the deadline for submission of a copy of the international application (unless previously communicated by the International Bureau) and payment of the basic national fee was extended to expire 30 months from the priority date, i.e., 13 March 2000 (11 March 2000 was a Saturday).

On 03 April 2000, applicant filed the Petition For Revival considered herein, with accompanying materials.

DISCUSSION

37 CFR 1.137(b) permits the filing of a petition to revive an abandoned application where the abandonment resulted from an unintentional delay. A grantable petition under this section must include: (1) the required reply, unless previously filed; (2) the petition fee required by law; (3) a statement that the "entire delay in filing the required reply from the due date for the reply until the filing of a grantable petition pursuant to this paragraph was unintentional;" and (4) any terminal disclaimer and fee required pursuant to 37 CFR 1.137(c).

Regarding item (1), the "required reply," section 711.03(c), page 700-93 of the Manual of Patent Examining Procedures states that:

> [g]enerally, the required reply is the reply sufficient to have avoided abandonment, had such reply been timely filed.

Here, a copy of the international application was not required because the international application had been filed in the United States Receiving Office. Thus, the "required reply" was the basic national fee. The Petition For Revival Applicant was accompanied by a check which included $670 for the basic national fee. Applicants have therefore made a submission which would have been "sufficient to have avoided abandonment" had it been made in a timely manner, that is, on or before 13 March 2000. Accordingly, applicants have submitted the "required reply." Item (1) is satisfied.

Item (2) is the petition fee required under 37 CFR 1.17(m). The Petition For Revival was accompanied by a check for the petition fee. Item (2) is satisfied.

As for item (3), the Petition For Revival expressly states that '[t]he entire delay in filing the required reply from the due date for the required reply until the filing of a grantable petition under 37 CFR 1.137(b) was unintentional." Item (3) under 37 CFR 1.137(b) is satisfied.

Under the terms of 37 CFR 1.137(c), the terminal disclaimer listed as item (4) above is not required for this application. Applicants have therefore satisfied all the requirements for a grantable petition under 37 CFR 1.137(b). The Petition For Revival is granted.

CONCLUSION

Applicants' Petition For Revival is **GRANTED**.

This application is being forwarded to the National Stage Processing Branch of the International Division for further processing in accord with this decision.

Leonard Smith
PCT Legal Examiner
PCT Legal Office

Richard M. Ross
PCT Petitions Attorney
PCT Legal Office
Telephone: (703) 308-6155
Facsimile: (703) 308-6459

RMR/LS:rmr

JUL 18 2001

UNITED STATES PATENT AND TRADEMARK OFFICE

#4

Commissioner for Patents
United States Patent and Trademark Office
Washington, D.C. 20231
www.uspto.gov

David L. Fehrman
Morrison & Foerster LLP
555 West Fifth Street, Suite 3500
Los Angeles, CA 90013-1024

In re Application of NAKAMURA	:	
U.S. Application No.: 09/509,968	:	
Int. Application No.: PCT/JP99/04226	:	DECISION
Int. Filing Date: 05 August 1999	:	
Priority Date: 06 August 1998	:	
Attorney Docket No.: 49774.20002.00	:	
For: GAME APPARATUS AND	:	
COMMUNICATION GAME SYSTEM	:	

This is in response to applicant's "Petition for Revival of an Application for Patent Abandoned Unintentionally Under 37 C.F.R. § 1.137(b)" and "Petition to Correct Inventor's Name" filed 17 April 2001.

BACKGROUND

On 05 August 1999, applicant filed international application PCT/JP99/04226, which claimed priority of an earlier Japan application filed 06 August 1998. A copy of the international application was communicated to the USPTO from the International Bureau on 15 February 2000. The twenty-month period for paying the basic national fee in the United States expired at midnight on 06 April 2000.

On 04 April 2000, applicant filed national stage papers with the United States Designated/Elected Office (DO/EO/US) including, *inter alia*, the requisite basic national fee.

On 12 June 2000, the DO/EO/US mailed a Notification of Missing Requirements Under 35 U.S.C. 371 (Form PCT/DO/EO/905) indicating that an oath or declaration had not been received.

On 17 April 2001, applicant filed the present petition under 37 CFR 1.137(b). The petition states that it is accompanied by a proper response to the Notification of Missing Requirements, the petition fee set forth in 37 CFR 1.17(m), and a statement that "the entire delay in filing the required reply from the due date for the required reply until the filing of a grantable petition under 37 CFR 1.137(b) was unintentional." The 17 April 2001 submission also included a petition to correct the inventor's name.

DISCUSSION

I. Petition under 37 CFR 1.137(b)

Under 37 CFR 1.137(b), a petition requesting that an application be revived on the grounds of unintentional abandonment must be accompanied by: (1) the required reply unless previously filed, (2) the petition fee as set forth in 37 CFR 1.17(m), (3) a statement that the entire delay in filing the required reply from the due date for the reply until the filing of a grantable petition was unintentional, and (4) a terminal disclaimer if the application was filed before 08 June 1995.

With regard to item (1), as discussed in §II below, the declaration filed 17 April 2001 is not acceptable at the present time.

With regard to item (2), applicant has provided the required petition fee.

With regard to item (3), applicant has provided the required statement.

With regard to item (4), because the international application was filed after 08 June 1995, no terminal disclaimer is required.

II. Petition to Correct the Inventor's Name

A review of the application file, including applicant's arguments in the present "Petition to Correct Inventor's Name", reveals that the given name of the inventor is listed in the international application as "Takayuki" while the given name is listed in the declaration as "Takashi". In that this is clearly more than a mere typographical error or a phonetic misspelling of the inventor's given name, a proper petition under 37 CFR 1.182 is required in order to resolve the matter. The requisite petition fee of $130.00 has been received. Statements from the inventor and any other persons having firsthand knowledge of the error must be provided. These statements shall set forth the specific circumstances as to how and when the error was made and discovered and must also set forth that the mistake was an inadvertent error without deceptive intent.

CONCLUSION

For the reasons set forth in §I above, the petition under 37 CFR 1.137(b) is DISMISSED without prejudice.

For the reasons set forth in §II above, the petition to correct the inventor's name is DISMISSED without prejudice.

According to USPTO records, applicant has submitted $170.00 in excess fees. $170.00 will be refunded to Deposit Account No. 03-1952.

If reconsideration on the merits of this decision is desired, a proper response must be filed within TWO (2) MONTHS from the mail date of this decision. Any reconsideration request should include a cover letter entitled "Renewed Petition Under 37 CFR 1.137(b) and 37 CFR 1.182" and must include an acceptable explanation of the facts as discussed above.

Please direct further correspondence with respect to this matter to the Commissioner for Patents, Box PCT, Washington, D.C. 20231, and address the contents of the letter to the attention of the PCT Legal Office.

Bryan Tung
PCT Legal Examiner
PCT Legal Office

Leonard Smith
PCT Legal Examiner
PCT Legal Office

Telephone: 703-308-6614
Facsimile: 703-308-6459

NOV 2 9 2001

#6

UNITED STATES PATENT AND TRADEMARK OFFICE

Commissioner for Patents
United States Patent and Trademark Office
Washington, D.C. 20231
www.uspto.gov

David L. Fehrman
Morrison & Foerster LLP
555 West Fifth Street, Suite 3500
Los Angeles, CA 90013-1024

In re Application of NAKAMURA	:	
U.S. Application No.: 09/509,968	:	
Int. Application No.: PCT/JP99/04226	:	DECISION
Int. Filing Date: 05 August 1999	:	
Priority Date: 06 August 1998	:	
Attorney Docket No.: 49774.20002.00	:	
For: GAME APPARATUS AND	:	
COMMUNICATION GAME SYSTEM	:	

This is in response to applicant's "Renewed Petition Under 37 C.F.R. § 1.137(b) and Petition Under 37 C.F.R. § 1.182" filed 17 October 2001.

BACKGROUND

On 05 August 1999, applicant filed international application PCT/JP99/04226, which claimed priority of an earlier Japan application filed 06 August 1998. A copy of the international application was communicated to the USPTO from the International Bureau on 15 February 2000. The twenty-month period for paying the basic national fee in the United States expired at midnight on 06 April 2000.

On 04 April 2000, applicant filed national stage papers with the United States Designated/Elected Office (DO/EO/US) including, *inter alia*, the requisite basic national fee.

On 12 June 2000, the DO/EO/US mailed a Notification of Missing Requirements Under 35 U.S.C. 371 (Form PCT/DO/EO/905) indicating that an oath or declaration had not been received.

On 17 April 2001, applicant filed a petition under 37 CFR 1.137(b) along with an executed declaration and a petition to correct the inventor's name.

On 16 July 2001, this Office mailed a decision dismissing the 17 April 2001 petitions because of a discrepancy between the inventor's name listed in the declaration and that listed in the international application.

On 17 October 2001, applicant filed the present renewed petition under 37 CFR 1.137(b) and the present petition under 37 CFR 1.182.

DISCUSSION

I. Petition under 37 CFR 1.137(b)

Under 37 CFR 1.137(b), a petition requesting that an application be revived on the grounds of unintentional abandonment must be accompanied by: (1) the required reply unless previously filed, (2) the petition fee as set forth in 37 CFR 1.17(m), (3) a statement that the entire delay in filing the required reply from the due date for the reply until the filing of a grantable petition was unintentional, and (4) a terminal disclaimer if the application was filed before 08 June 1995.

Applicant has previously satisfied items (2), (3), and (4).

With regard to item (1), as discussed in §II below, the declaration filed 17 April 2001 is not acceptable at the present time.

II. Petition to Correct the Inventor's Name

The given name of the inventor is listed in the international application as "Takayuki" while the given name is listed in the declaration as "Takashi". As set forth in the 16 July 2001 decision, a proper petition under 37 CFR 1.182 must include statements from the inventor and the persons having firsthand knowledge of the error setting forth the specific circumstances as to how and when the error was made and discovered and setting forth that the mistake was an inadvertent error without deceptive intent.

In the present case, the renewed petition states that the mistake was due to a translation error. Applicant has supplied an affidavit from Yasuo Yajima, the person with apparent firsthand knowledge of the error. However, Yajima's affidavit does not specifically state that the mistake was an inadvertent error without deceptive intent. Furthermore, applicant has not provided a statement from the inventor.

CONCLUSION

For the reasons set forth in §I above, the renewed petition under 37 CFR 1.137(b) is DISMISSED without prejudice.

For the reasons set forth in §II above, the petition under 37 CFR 1.182 is DISMISSED without prejudice.

If reconsideration on the merits of this decision is desired, a proper response must be filed within TWO (2) MONTHS from the mail date of this decision. Any reconsideration request should include a cover letter entitled "Renewed Petition Under 37 CFR 1.137(b) and 37 CFR 1.182" and must include the appropriate statements as discussed above.

Please direct further correspondence with respect to this matter to the Commissioner for Patents, Box PCT, Washington, D.C. 20231, and address the contents of the letter to the attention of the PCT Legal Office.

Bryan Tung
PCT Legal Examiner
PCT Legal Office

Telephone: 703-308-6614
Facsimile: 703-308-6459

MAR 1 3 2002

UNITED STATES PATENT AND TRADEMARK OFFICE

Commissioner for Patents
United States Patent and Trademark Office
Washington, D.C. 20231
www.uspto.gov

David L. Fehrman
Morrison & Foerster LLP
555 West Fifth Street, Suite 3500
Los Angeles, CA 90013-1024

In re Application of NAKAMURA	:	
U.S. Application No.: 09/509,968	:	
Int. Application No.: PCT/JP99/04226	:	DECISION
Int. Filing Date: 05 August 1999	:	
Priority Date: 06 August 1998	:	
Attorney Docket No.: 49774.20002.00	:	
For: GAME APPARATUS AND	:	
COMMUNICATION GAME SYSTEM	:	

This is in response to applicant's "Second Renewed Petition Under 37 C.F.R. § 1.137(b) and Petition Under 37 C.F.R. § 1.182" filed 04 March 2002.

BACKGROUND

On 05 August 1999, applicant filed international application PCT/JP99/04226, which claimed priority of an earlier Japan application filed 06 August 1998. A copy of the international application was communicated to the USPTO from the International Bureau on 15 February 2000. The twenty-month period for paying the basic national fee in the United States expired at midnight on 06 April 2000.

On 04 April 2000, applicant filed national stage papers with the United States Designated/Elected Office (DO/EO/US) including, *inter alia*, the requisite basic national fee.

On 12 June 2000, the DO/EO/US mailed a Notification of Missing Requirements Under 35 U.S.C. 371 (Form PCT/DO/EO/905) indicating that an oath or declaration had not been received.

On 17 April 2001, applicant filed a petition under 37 CFR 1.137(b) along with an executed declaration and a petition to correct the inventor's name.

On 16 July 2001, this Office mailed a decision dismissing the 17 April 2001 petitions because of a discrepancy between the inventor's name listed in the declaration and that listed in the international application.

On 17 October 2001, applicant filed a renewed petition under 37 CFR 1.137(b) and a petition under 37 CFR 1.182.

On 29 November 2001, this Office mailed a decision dismissing the 17 October 2001 petitions.

On 04 March 2002, applicant filed the present renewed petitions under 37 CFR 1.137(b) and 37 CFR 1.182.

DISCUSSION

I. Petition under 37 CFR 1.137(b)

Under 37 CFR 1.137(b), a petition requesting that an application be revived on the grounds of unintentional abandonment must be accompanied by: (1) the required reply unless previously filed, (2) the petition fee as set forth in 37 CFR 1.17(m), (3) a statement that the entire delay in filing the required reply from the due date for the reply until the filing of a grantable petition was unintentional, and (4) a terminal disclaimer if the application was filed before 08 June 1995.

Applicant has previously satisfied items (2), (3), and (4).

With regard to item (1), the declaration filed 17 April 2001 is acceptable.

II. Petition to Correct the Inventor's Name

The given name of the inventor is listed in the international application as "Takayuki" while the given name is listed in the declaration as "Takashi". The present renewed petition states that the mistake was due to a translation error. Applicant has supplied an affidavit from Yasuo Yajima, the person with apparent firsthand knowledge of the error, and an affidavit from the inventor. The affidavits state that the mistake was an inadvertent error without deceptive intent. Applicant's explanation for the discrepancy is accepted.

CONCLUSION

For the reasons set forth in §I above, the renewed petition under 37 CFR 1.137(b) is GRANTED.

For the reasons set forth in §II above, the petition under 37 CFR 1.182 is GRANTED.

A review of the application file reveals that proper petition fees were submitted on 17 April 2001. Thus, the additional petition fees submitted on 17 October 2001 and 04 March 2002 were paid in excess. Accordingly, $260.00 will be refunded to Deposit Account Number 03-1952 pursuant to 37 CFR 1.26.

The application has an International Filing Date of 05 August 1999 and a date under 35 U.S.C. 371 of 17 April 2001.

The application will be forwarded to the United States Designated/Elected Office (DO/EO/US) for further processing in accordance with this decision.

Bryan Tung
PCT Legal Examiner
PCT Legal Office

Telephone: 703-308-6614
Facsimile: 703-308-6459

UNITED STATES DEPARTMENT OF COMMERCE
Patent and Trademark Office
Address: COMMISSIONER OF PATENTS AND TRADEMARKS
Washington, D.C. 20231

#3

SERIAL NUMBER	REQUEST DATE	FIRST NAMED APPLICANT	ATTORNEY DOCKET NO.
09/510,053	**4/27/00**	**MARK NIXON, ET AL**	**06005/35628A**

Title: **INTEGRATING DISTRIBUTED PROCESS CONTROL SYSTEM FUNCTIONALITY ON A SINGLE COMPUTER**

Art Unit	Paper Number

Correspondence Address:
ROGER A. HEPPERMANN
MARSHALL, O'TOOLE, GERSTEIN, MURRAY & BORUN
6300 SEARS TOWER
233 SOUTH WACKER DRIVE
CHICAGO, IL 60606-6402

Licensee under 35 U.S.C. 184 is hereby granted to file in any foreign country a patent application and any amendments thereto corresponding to the subject matter of this U.S. application identified above and/or any material accompanying the petition. This license is conditioned upon modification of any applicable secrecy order and is subject to revocation without notice.

License Number: 524,789

Grant Date: 28-Apr-00

Approved:

for Commissioner of Patents and Trademarks

This license empowers the filing, the causation and the authorization of the filing of a foreign application or applications on the subject matter identified above, subsequent forwarding of all duplicate and formal papers and the prosecution of such aplication or applications.

This license is granted under 37 CFR 5.15(a)

This license is to be retained by the licensee and may be used at anytime on or after the date thereof. This license is not retroactive unless specifically indicated.

The grant of this license does not in any way lesson the responsibility of the licensee for the security of the subject matter as imposed by any Government contract or the provisions of existing laws relating to espionage and the national security or the export of technical data. Licensees should apprise themselves of current regulations, especially with respecct to certain countries, of other agencies, particularly the Department of the Treasury; Office of Munitions Control, Department of State (with respect to Arms, Munitions and Implements of War); the Bureau of Trade Regulation, Office of Export Adminstration, Department of Commerce; and the Department of Energy.

LICENSE FOR FOREIGN FILING

[Title 35, United States Code (1952) Sections 184, 185, 186]

SPE RESPONSE FOR CERTIFICATE OF CORRECTION

Paper No.: _____

DATE : 4-25-08

TO SPE OF : ART UNIT 2100

SUBJECT : Request for Certificate of Correction for Appl. No. 09/510053 Patent No.: 7257523

Please respond to this request for a certificate of correction within 7 days.

Please review the requested changes/corrections as shown in the **COCIN** document(s) in the IFW application image. No new matter should be introduced, nor should the scope or meaning of the claims be changed.

Please complete the response (see below) and forward the completed response to scanning using document code **COCX**.

Certificates of Correction Branch

703-308-9390 ext. 117

Thank You For Your Assistance

The request for issuing the above-identified correction(s) is hereby:

Note your decision on the appropriate box.

- [X] Approved — All changes apply.
- [ ] Approved in Part — Specify below which changes do not apply.
- [ ] Denied — State the reasons for denial below.

Comments: _____

PAUL RODRIGUEZ
SUPERVISORY PATENT EXAMINER
TECHNOLOGY CENTER 2100

SPE

2123
Art Unit

UNITED STATES PATENT AND TRADEMARK OFFICE

Commissioner for Patents
United States Patent and Trademark Office
Washington, D.C. 20231
www.uspto.gov

NOV 27 2000

Paper No. 7

Jeffrey R. Gargano
WALLENSTEIN & WAGNER LTD
311 South Wacker Drive, 53rd Floor
Chicago, IL 60606-6622

In re Application of	)	
MINERVINI et al.	)	
Application No. 09/510,116	)	DECISION ON PETITION
Filed: February 22, 2000	)	TO MAKE SPECIAL
For: PTC CIRCUIT PROTECTION DEVICES	)	

This is a decision on the petition under 37 C.F.R. § 1.102, filed September 11, 2000, to make the above-identified application special under the accelerated examination procedure set forth in M.P.E.P. § 708.02, Item II: Infringement.

A grantable petition to make special under 37 C.F.R. § 1.102 and in accordance with M.P.E.P. § 708.02, Item II, must be accompanied by a statement alleging (A) that there is an infringing device or product actually on the market or method in use, (B) that a rigid comparison of the alleged infringing device, product, or method with the claims of the application has been made, and that, in his or her opinion, some of the claims are unquestionably infringed; and (C) that he or she has made or caused to be made a careful and thorough search of the prior art or has a good knowledge of the pertinent prior art.

The petition includes a statement by the practitioner alleging items A, B and C above.

Accordingly, the petition is GRANTED.

The application is being forwarded to the examiner for expedited prosecution.

Subject alone to diligent prosecution by the applicant, this application will continue to be special throughout its entire course of prosecution in the Patent and Trademark Office, including appeal, if any, to the Board of Patent Appeals and Interferences.

Ed Glick, Special Programs Examiner
Technology Center 2800 - Semiconductors, Electrical
and Optical Systems and Components

UNITED STATES PATENT AND TRADEMARK OFFICE

Commissioner for Patents
United States Patent and Trademark Office
P.O. Box 1450
Alexandria, VA 22313-1450
www.uspto.gov

NOV 17 2006

CROWELL & MORING LLP
INTELLECTUAL PROPERTY GROUP
P.O. BOX 14300
WASHINGTON DC 20044-4300

In re Application of	:
Charles S. Zuker et al	:
Serial No.: 09/510,332	: PETITION DECISION
Filed: February 22, 2000	:
Attorney Docket No.: 02307E-098010	:

This is a decision on the PETITION FOR ACCEPTANCE OF COLOR DRAWINGS UNDER 37 CFR 1.84(a)(2). The petition was filed September 2, 2004. Entry of color drawings requires: 1) three sets of the color drawings, 2) a proper amendment to the specification indicating color photographs or drawings are present in the file, and 3) the required fee under 37 CFR 1.17(h).

A review of the application record indicates that the petition meets all of the requirements for acceptance of color drawings. This is not to be construed that all of the drawings are accepted, only that the color drawings are acceptable.

The petition is **GRANTED**.

Should there be any questions with respect to this decision, please contact William R. Dixon, Jr., by mail addressed to: Director, Technology Center 1600, Washington, D.C. 20231, or by telephone at 571-272-0519 or by facsimile transmission at 571-273-8300.

John LeGuyader
Director, Technology Center 1600

UNITED STATES PATENT AND TRADEMARK OFFICE

COMMISSIONER FOR PATENTS
UNITED STATES PATENT AND TRADEMARK OFFICE
P.O. BOX 1450
ALEXANDRIA, VA 22313-1450
www.uspto.gov

Paper No.

TOWNSEND AND TOWNSEND
AND CREW, LLP
TWO EMBARCADERO CENTER
8TH FLOOR
SAN FRANCISCO CA 94111

COPY MAILED

NOV 20 2007

OFFICE OF PETITIONS

In re Patent No. 7,244,584	:	DECISION ON REQUEST FOR
Zuker et al.	:	RECONSIDERATION OF
Issue Date: July 17, 2007	:	PATENT TERM ADJUSTMENT
Application No. 09/510,332	:	and
Filed: February 22, 2000	:	NOTICE OF INTENT TO ISSUE
Attorney Docket No. 02307E-098010US(20000452)	:	CERTIFICATE OF CORRECTION

This is a decision on the "APPLICATION FOR PATENT TERM ADJUSTMENT UNDER 37 C.F.R. §1.705(b)," filed July 13, 2007. The instant petition is being treated under 37 C.F.R. §1.705(d). No petition pursuant to §1.705(b) may be filed after payment of the Issue Fee. In this case, the Issue Fee was paid on September 2, 2004. Patentees request that the patent term adjustment of four hundred (400) days indicated on the Determination of Patent Term Adjustment Under 35 U.S.C. 154(b) be increased to nine hundred twenty-two (922) days.

The request for reconsideration of the patent term adjustment under § 1.705(d) is **GRANTED to the extent indicated herein**.

For the reasons stated herein, the patent term adjustment indicated in the patent is to be corrected by issuance of a certificate of correction showing a revised Patent Term Adjustment of eight hundred forty-eight **(848)** days.

Patentees are given **TWO (2) MONTHS** from the mail date of this decision to respond. No extensions of time will be granted under § 1.136.

On July 17, 2007, application No. 09/510,332 matured into Patent No. 7,244,584. The instant request for reconsideration filed July 13, 2007, in response to the Issue Notification, was timely filed within 2 months of the date the patent issued. See § 1.705(d). The Patent issued with a revised Patent Term Adjustment of 400 days. Patentees argue that an error in the determination is due, in part, to the Patent Office's erroneous treatment of two granted *Petitions Under 37 C.F.R. §1.181(a) to Withdraw Holdings of Abandonment* as *Petitions to Revive*.

Patentees' arguments have been considered, as follows:

Patentees request a further period of adjustment of 1177 (284 + 48 + 845) days for the Office failing to respond to a reply under 35 U.S.C. 132 not later than four months after the date on which the reply was filed. A response was filed on June 18, 2002. Patentees argue that pursuant to the decision to withdraw the holding of abandonment mailed July 25, 2003, an Office action was first mailed to the proper correspondence address of record on July 29, 2003. Accordingly, patentees argue entitlement to an additional period of adjustment of 284 days (i.e. October 19, 2002 to July 29, 2003). Patentees are correct. A period of adjustment of 284 days has been entered.

Patentees further argue that a response to the Office action mailed July 29, 2003 was filed on January 22, 2004 and that a period of adjustment of 48 days should be entered because the Office did not take action until the mailing of a corrected Notice of Allowance on June 9, 2004. A review of the application history reveals that a response was filed on January 26, 2004. In this regard, patentees' attention is directed to 37 CFR 1.703(f), which provides that "[t]he date indicated on any certificate of mailing or transmission under § 1.8 shall not be taken into account in this calculation" of patent term adjustment. See also, Comment 10, *Changes to Implement Patent Term Adjustment under Twenty-Year Patent Term; Final Rule*, 65 Fed. Reg. 54366 (September 18, 2000). Accordingly, the date of receipt of January 26, 2004, not the certificate of mail date of January 22, 2004, is properly used in calculating patent term adjustment. Moreover, a Notice of Allowance was mailed on April 8, 2004. This was within four months. Accordingly, no period

of adjustment was entered. The mailing of a corrected Notice of Allowance does not negate the fact that a Notice of Allowance was mailed on April 8, 2004 and properly considered in calculating Office delay.

However, patentees are correct that the entry of a period of reduction of 411 days in association with patentees' response filed January 26, 2004 is incorrect. Applicant delay pursuant to 37 CFR 1.704(b) for the applicant taking in excess of three months to file a response is properly calculated using the date of re-mailing of the Office action, July 29, 2003, not the date of the original mailing, September 11, 2002. Accordingly, the period of reduction is 89 days, not 85 days or 411 days (i.e., October 30, 2003 to January 26, 2004, not January 22, 2004).

Patentee requests that an additional 845 days of PTO delay occurred after payment of the issue fee. It is noted that the instant application for patent term adjustment was filed prior to issuance of the patent. At issuance of the patent, 919 additional days were entered for the Office taking in excess of four months to issue the patent after payment of the issue fee. Thus, to the extent that patentees request entry of a period of adjustment for Office delay in issuing the patent after payment of the issue fee, the application for patent term adjustment is moot.

However, this period was calculated as from January 10, 2005 to July 17, 2007. As the issue fee was actually paid (and replacement drawings submitted) on September 2, 2004, this period should have been calculated from the date beginning on the day after four month from payment of the issue fee and satisfaction of all outstanding requirements, January 3, 2005, to the date of issuance of the patent, July 17, 2007. Accordingly, a period of adjustment of 7 days is being entered for the period beginning on January 3rd and ending on January 9th.

Moreover, it is noted that a period of adjustment of 104 days was entered for the Office taking in excess of three years to issue the patent. With respect to §1.703(b), it is noted that the patent issued three years and 1023 days after its filing date. However, any days of delay for Office issuance of the patent more than 3 years after the filing date of the application, which overlap, with the days of patent term adjustment accorded prior to the issuance of the patent will not

result in any additional patent term adjustment. Further, in considering the overlap, the entire period during which the application was pending (except for periods excluded under 35 U.S.C. 154(b)(1)(B)(i)-(iii), and not just the period beginning three years after the actual filing date of the application, is the period of delay under 35 U.S.C. 154(b)(1)(B) in determining whether periods of delay overlap under 35 U.S.C. 154(b)(2)(A). See 35 U.S.C. 154(b) (1)(B); 35 U.S.C. 154(b)(2)(A); and 37 CFR 1.703(f). In this instance, it was properly concluded that the period of 919 days overlapped. Thus, the application accrued 104 additional days pursuant to 37 CFR 1.703(b). However, given the entry of an additional period of adjustment of 284 days, which overlaps with the 1023 days, the application should not accrue any additional days pursuant to 37 CFR 1.703(b). Accordingly, the period of adjustment of 104 days pursuant to 37 CFR 1.703(b) is being removed.

A review of the application history further reveals that a period of reduction of 120 days was entered pursuant to 37 CFR 1.704(c)(10) for applicant filing drawings after the mailing of the Notice of Allowance. This is in connection with drawings filed November 22, 2004. It is noted that this was a resubmission of the drawings filed September 2, 2004. Nonetheless, entry of the period of reduction of 120 days is warranted. 37 CFR § 1.704(c)(10) provides that:

Submission of an amendment under § 1.312 or other paper after a notice of allowance has been given or mailed, in which case the period of adjustment set forth in § 1.703 shall be reduced by the lesser of:

(i) The number of days, if any, beginning on the date the amendment under § 1.312 or other paper was filed and ending on the mailing date of the Office action or notice in response to the amendment under § 1.312 or such other paper;

or

(ii) Four months;

Other than those papers identified in this Notice, all papers filed after allowance of an application substantially delay the Office's ability to process an application for a patent because the Office does not wait until payment of the Issue Fee to begin the patent issue process. As a result, 37 CFR 1.704(c)(10) does

not distinguish between papers that are and are not required by the Office. Filing of any drawings after allowance will be treated as a failure to engage in reasonable efforts to conclude prosecution. See *Clarification of 37 CFR 1.704(c)(10) - Reduction of Patent Term Adjustment for Certain Types of Papers Filed After a Notice of Allowance*, 1247 OG 111 (June 26, 2001; See also MPEP 2700. In this instance, drawings were filed on September 2, 2004 along with a petition to accept color drawings. The Office took action in response on April 27, 2007. Accordingly, a period of reduction of 120 days was properly entered, but for the lesser period (as opposed to from September 2, 2004 to April 27, 2007) associated with the drawings filed September 2, 2004.

Moreover, a review of the application history reveals that further drawings were filed on May 18, 2007 and the patent issued on July 17, 2007. Pursuant to 37 CFR 1.704(c)(10), a further period of reduction of 61 days is being entered for the period beginning on May 18, 2007 and ending on July 17, 2007.

It is noted that patentees did not delay in filing petitions to withdraw the holding of abandonment as appropriate. Accordingly, no periods of reduction pursuant to 37 CFR 1.704(c)(4) were entered for applicant failure to file a petition to withdraw the holding of abandonment or to revive an application within two months from the mailing date of a notice of abandonment.

Both patentees and the Office agree that a period of reduction of 92 days in association with the response filed June 18, 2002 was properly entered pursuant to 37 CFR 1.704(b).

Patentees are incorrect that a period of reduction should be entered for applicant taking in excess of three months to file a continued prosecution application (CPA) after the mailing of a non-final Office action on April 11, 2001. This application became eligible for patent term adjustment due to examination delay under 35 U.S.C. 154(b) by virtue of the filing of the CPA on September 27, 2001. Calculation of the patent term adjustment does not begin until the filing of the CPA on September 27, 2001.

In view thereof, the patent should have issued with a revised Patent Term Adjustment of eight hundred forty-eight (848) days.

The Office has updated the PAIR screen to reflect that the correct Patent Term Adjustment (PTA) is eight hundred forty-eight **(848)** days. A copy of the updated PAIR screen, showing the correct determination, is enclosed.

Receipt is acknowledged of the $200.00 fee set forth in 37 CFR 1.18(e). No additional fees are required.

The application file is being forwarded to the Certificates of Correction Branch for issuance of a certificate of correction in order to rectify this error. The Office will issue a certificate of correction indicating that the term of the above-identified patent is extended or adjusted by eight hundred forty-eight **(848)** days.

Telephone inquiries specific to this decision may be directed to the undersigned at (571) 272-3219.

Nancy Johnson
Senior Petitions Attorney
Office of Petitions

Enclosures: Copy of UPDATED Pair Screen
Copy of DRAFT Certificate of Correction

Day : Monday
Date: 11/19/2007

PALM INTRANET

Time: 19:38:30

PTA Calculations for Application: 09/510332			
Application Filing Date:	02/22/2000	PTO Delay (PTO):	1023
Issue Date of Patent:	07/17/2007	Three Years:	0
Pre-Issue Petitions:	0	Applicant Delay (APPL):	623
Post-Issue Petitions:	0	Total PTA (days):	848
PTO Delay Adjustment:	448		

File Contents History

Number	Date	Contents Description	PTO	APPL	START
122	11/19/2007	ADJUSTMENT OF PTA CALCULATION BY PTO		61	
121	11/19/2007	ADJUSTMENT OF PTA CALCULATION BY PTO		89	
120	11/19/2007	ADJUSTMENT OF PTA CALCULATION BY PTO	411		
119	11/19/2007	ADJUSTMENT OF PTA CALCULATION BY PTO		104	
118	11/19/2007	ADJUSTMENT OF PTA CALCULATION BY PTO	284		
117	11/19/2007	ADJUSTMENT OF PTA CALCULATION BY PTO	7		
112.5	06/27/2007	PTA 36 MONTHS	104		
112	07/17/2007	PATENT ISSUE DATE USED IN PTA CALCULATION	919		82
111	05/17/2007	SEQUENCE FORWARDED TO PUBS ON TAPE			
110	06/01/2007	WORKFLOW - QUERY REQUEST - FINISH			
109	05/25/2007	EXPORT TO INITIAL DATA CAPTURE			
108	04/27/2007	MAIL MISCELLANEOUS COMMUNICATION TO APPLICANT			
107	04/26/2007	MISCELLANEOUS COMMUNICATION TO APPLICANT - NO ACTION COUNT			
106	04/27/2007	MAIL MISCELLANEOUS COMMUNICATION TO APPLICANT			
105	04/26/2007	MISCELLANEOUS COMMUNICATION TO APPLICANT - NO ACTION COUNT			
104	04/11/2007	WORKFLOW - QUERY REQUEST - BEGIN			
103	04/02/2007	RECEIPT INTO PUBS			
102	04/02/2007	RECEIPT INTO PUBS			
101	04/02/2007	RECEIPT INTO PUBS			
100	04/02/2007	RECEIPT INTO PUBS			
99	03/29/2007	DISPATCH TO FDC			
98	03/29/2007	DISPATCH TO FDC			

97	03/29/2007	DISPATCH TO FDC			
96	03/29/2007	DISPATCH TO FDC			
95	11/22/2004	WORKFLOW - DRAWINGS FINISHED		120	106
94	09/02/2004	ISSUE FEE PAYMENT VERIFIED			
93	03/29/2007	DISPATCH TO FDC			
92	03/29/2007	DISPATCH TO FDC			
91	03/29/2007	DISPATCH TO FDC			
90	03/29/2007	DISPATCH TO FDC			
89	03/29/2007	CORRESPONDENCE ADDRESS CHANGE			
88	03/29/2007	CHANGE IN POWER OF ATTORNEY (MAY INCLUDE ASSOCIATE POA)			
87	03/29/2007	RECEIPT INTO PUBS			
86	12/12/2006	RECEIPT INTO PUBS			
85	12/12/2006	RECEIPT INTO PUBS			
84	12/12/2006	RECEIPT INTO PUBS			
83	12/12/2006	APPLICATION IS CONSIDERED READY FOR ISSUE			
82	09/09/2004	ISSUE FEE PAYMENT VERIFIED			
81	12/11/2006	WITHDRAW PUBLICATION/PRE-EXAM ABANDON			
80	12/12/2006	MAIL-PETITION TO REVIVE APPLICATION - GRANTED			
79	11/17/2006	MAIL-PETITION DECISION - GRANTED			
78	11/22/2004	PETITION ENTERED			
77	09/02/2004	PETITION ENTERED			
76	11/22/2004	NEW OR ADDITIONAL DRAWING FILED		0	
74	10/21/2004	MAIL ABANDONMENT FOR FAILURE TO CORRECT DRAWINGS/OATH			
73	10/21/2004	ABANDONMENT FOR FAILURE TO CORRECT DRAWINGS/OATH/NONPUB REQUEST			
72	10/19/2004	RECEIPT INTO PUBS			
71	09/02/2004	WORKFLOW INCOMING AMENDMENT IFW			
70	09/02/2004	ISSUE FEE PAYMENT RECEIVED			
69	07/16/2004	RECEIPT INTO PUBS			
68	06/23/2004	RECEIPT INTO PUBS			
67	06/09/2004	MAIL CORRECTED NOTICE OF ALLOWANCE			
66	06/08/2004	CORRECTED NOTICE OF ALLOWANCE			
65	06/08/2004	CORRESPONDENCE ADDRESS CHANGE			
64	05/10/2004	SEQUENCE FORWARDED TO PUBS ON TAPE			

63	04/30/2004	RECEIPT INTO PUBS			
62	04/29/2004	WORKFLOW - FILE SENT TO CONTRACTOR			
61	04/23/2004	MAIL CORRECTED NOTICE OF ALLOWANCE			
60	04/23/2004	CORRECTED NOTICE OF ALLOWANCE			
59	04/08/2004	MAIL NOTICE OF ALLOWANCE			
58	04/08/2004	MAIL FORMAL DRAWINGS REQUIRED			
57	04/08/2004	MAIL EXAMINER'S AMENDMENT			
56	04/08/2004	ISSUE REVISION COMPLETED			
55	04/08/2004	FORMAL DRAWINGS REQUIRED			
54	04/08/2004	NOTICE OF ALLOWANCE DATA VERIFICATION COMPLETED			
53	04/08/2004	CASE DOCKETED TO EXAMINER IN GAU			
52	04/08/2004	EXAMINER'S AMENDMENT COMMUNICATION			
51	04/08/2004	NOTICE OF ALLOWABILITY			
50	02/12/2004	CORRESPONDENCE ADDRESS CHANGE			
49	02/12/2004	DATE FORWARDED TO EXAMINER			
48	01/26/2004	RESPONSE AFTER NON-FINAL ACTION		411	34
47	01/26/2004	REQUEST FOR EXTENSION OF TIME - GRANTED			
46	07/29/2003	RESTART RESPONSE OF ACTION			
45	07/29/2003	MAIL NOTICE OF RESTARTED RESPONSE PERIOD			
44	07/29/2003	LETTER RESTARTING PERIOD FOR RESPONSE (I.E. LETTER RE: REFERENCES)			
43	07/29/2003	MAIL NOTICE OF RESCINDED ABANDONMENT			
42	07/29/2003	NOTICE OF RESCINDED ABANDONMENT IN TCS			
41	07/25/2003	MAIL-PETITION TO REVIVE APPLICATION - GRANTED			
40	04/28/2003	PETITION ENTERED			
39	04/23/2003	MAIL ABANDONMENT FOR FAILURE TO RESPOND TO OFFICE ACTION			
38	04/23/2003	ABANDONMENT FOR FAILURE TO RESPOND TO OFFICE ACTION			
37	03/17/2003	POWER TO MAKE COPIES AND/OR INSPECT			
36	03/18/2003	CORRESPONDENCE ADDRESS CHANGE			
35	03/18/2003	CHANGE IN POWER OF ATTORNEY (MAY INCLUDE ASSOCIATE POA)			
34	09/11/2002	MAIL NON-FINAL REJECTION			
33	09/09/2002	NON-FINAL REJECTION			

32	07/02/2002	DATE FORWARDED TO EXAMINER			
31	06/18/2002	RESPONSE TO ELECTION / RESTRICTION FILED		92	29
30	06/18/2002	REQUEST FOR EXTENSION OF TIME - GRANTED			
29	12/18/2001	MAIL RESTRICTION REQUIREMENT			
28	12/17/2001	REQUIREMENT FOR RESTRICTION / ELECTION			
27	10/04/2001	CORRESPONDENCE ADDRESS CHANGE			
26	09/27/2001	PRELIMINARY AMENDMENT			
25	10/04/2001	DATE FORWARDED TO EXAMINER			
24	09/27/2001	CONTINUING PROSECUTION APPLICATION - CONTINUATION (ACPA)			
23	09/27/2001	MAIL EXPRESS ABANDONMENT (DURING EXAMINATION)			
22	09/27/2001	EXPRESS ABANDONMENT (DURING EXAMINATION)			
21	09/27/2001	WORKFLOW - REQUEST FOR CPA - FINISH			
20	09/27/2001	REQUEST FOR EXTENSION OF TIME - GRANTED			
19	09/27/2001	WORKFLOW - REQUEST FOR CPA - BEGIN			

Search Another: Application# [ ] Search

EXPLANATION OF PTA CALCULATION

EXPLANATION OF PTE CALCULATION

To go back use Back button on your browser toolbar.

Back to PALM | ASSIGNMENT | OASIS | Home page

UNITED STATES PATENT AND TRADEMARK OFFICE

CERTIFICATE OF CORRECTION

PATENT : 7,244,584 B2

DATED : July 17, 2007

INVENTOR(S) : Zuker et al.

DRAFT

It is certified that error appears in the above-identified patent and that said Letters Patent is hereby corrected as shown below:

On the cover page,

[*] Notice: Subject to any disclaimer, the term of this patent is extended or adjusted under 35 USC 154(b) by (400) days

Delete the phrase "by 400 days" and insert – by 848 days--

UNITED STATES PATENT AND TRADEMARK OFFICE

Commissioner for Patents
United States Patent and Trademark Office
P.O. Box 1450
Alexandria, VA 22313-1450
www.uspto.gov

Paper No.

AFFYMETRIX, INC
ATTN: CHIEF IP COUNSEL, LEGAL DEPT.
3420 CENTRAL EXPRESSWAY
SANTA CLARA CA 95051

COPY MAILED

MAY 19 2008

OFFICE OF PETITIONS

In re Application of	:	
Cronin et al.	:	DECISION ON
Application No: 09/510,378	:	PETITION
Filed: February 22, 2000	:	
Atty Docket No. 18547-004131US	:	

This is a decision on the PETITION FOR REVIVAL OF AN APPLICATION FOR PATENT ABANDONED UNINTENTIONALLY UNDER 37 CFR 1.137(b) filed July 20, 2007. This petition was recently forwarded to the undersigned for consideration.

The petition is **GRANTED**.

The above-identified application became abandoned for failure to pay the Issue Fee and Publication Fee within three months of the mailing date, September 28, 2006, of the Notice of Allowance and Fee(s) Due. This Office action set a three-month nonextendable statutory period for reply. No reply having been received, the above-identified application became abandoned on December 29, 2006. A courtesy Notice of Abandonment was mailed on July 6, 2007.

The petition included the required reply[1] in the form of payment of the Issue Fee and Publication Fee; payment of the petition fee set forth in 37 CFR § 1.17(m); and the required statement of unintentional delay. No terminal disclaimer is required.

[1] There was no distinct but concurrent requirement for new drawings.

It is not apparent whether the person signing the statement of unintentional delay was in a position to have firsthand or direct knowledge of the facts and circumstances of the delay at issue. Nevertheless, such statement is being treated as having been made as the result of a reasonable inquiry into the facts and circumstances of such delay. See 37 CFR 10.18(b) and Changes to Patent Practice and Procedure; Final Rule Notice, 62 Fed. Reg. 53131, 53178 (October 10, 1997), 1203 Off. Gaz. Pat. Office 63, 103 (October 21, 1997). In the event that such an inquiry has not been made, petitioner must make such an inquiry. If such inquiry results in the discovery that it is not correct that the entire delay in filing the required reply from the due date for the reply until the filing of a grantable petition pursuant to 37 CFR 1.137(b) was unintentional, petitioner must notify the Office.

It is concluded that all requirements of 37 CFR 1.137(b) have been met.

The Office of Data Management (formerly known as the Office of Patent Publication) has been advised of this decision. The application is, thereby, forwarded for processing into a patent.

Telephone inquiries related to this decision should be directed to the undersigned at (571) 272-3219.

Nancy Johnson

Nancy Johnson
Senior Petitions Attorney
Office of Petitions

NOTICE RE: CERTIFICATES OF CORRECTION

DATE : 01/28/03 Paper No.: 16

TO : Supervisor, Art Unit 1700

SUBJECT : Certificate of Correction Request in Patent No.: 6248,390

A response to the following question is requested with respect to the accompanying request for a certific of correction.

With respect to the change(s) requested, correcting Office and/or Applicant's errors, should the patent read as shown in the certificate of correction? No new matter should be introduced, nor should tl scope or meaning of the claims be changed.

PLEASE COMPLETE THIS FORM AND
RETURN WITH FILE, WITHIN 7 DAYS,
TO CERTIFICATES OF CORRECTION BRANCH - PK 3-915/922
PALM LOCATION 7580 - TEL. N0. 305-8309

THANK YOU FOR YOUR ASSISTANCE!

Note your decision, regarding the changes requested in the Request for Certificate of Correction, placing a check mark (+) in the box that reflects your decision, which corresponds to the question check above.

☒ **YES** ☐ **NO** ☐ **Comments below**

☒ **Comments:** The 1449 was missing but the references were considered on 11/17/2000 the time the first office action was prepared by the examiner

Kmrde 1761

Supervisor **Art Unit**

M 10-27-04

UNITED STATES PATENT AND TRADEMARK OFFICE

EPLC
RECEIVED
29 OCT 2004

COMMISSIONER FOR PATENT
UNITED STATES PATENT AND TRADEMARK OFFIC
P.O. BOX 1450
ALEXANDRIA, VA 22313-1450
www.uspto.go

Paper No. 15

MAIL

OCT 27 2004

DIRECTOR OFFICE
TECHNOLOGY CENTER 2600

EITAN, PEARL, LATZER & COHEN ZEDEK LLP
10 ROCKEFELLER PLAZA, SUITE 1001
NEW YORK NY 10020

In re Application of
James Farmer
Application No. 09/510,550
Filed: February 22, 2000
For: **HIGH SPEED ACCESS SYSTEM OVER COPPER CABLE PLANT**

DECISION ON PETITION TO WITHDRAW HOLDING OF ABANDONMENT

This is a decision on the petition filed October 5, 2004 to withdraw holding of abandonment pursuant to 37 C.F.R.§ 1.181(a). No fee is required.

The petition is **GRANTED.**

The application was abandoned for failure to respond in a timely and effective manner to the non-final Office action mailed January 21, 2004. A Notice of Abandonment was mailed on September 30, 2004.

Petitioner asserts that a proper response was timely filed on July 21, 2004. In support of the petition, Petitioner has submitted, a copy of Applicant's reply and a date-stamped post card receipt evidencing receipt of the response and a petition for three months extension of time within the United States Patent & Trademark Office on July 21, 2004.

The original correspondence filed was not matched with the application file and cannot be located. However, M.P.E.P. § 503 states, "[a] post card receipt which itemizes and properly identifies the papers which are being filed serves as *prima facie* evidence of receipt in the U.S.PTO of all the items listed thereon on the date stamped thereon by the PTO." Accordingly, it is concluded that the response was timely filed in the Patent and Trademark Office but not matched with the application file. The fee for three months extension of time submitted with the original response has been received and credited to the instant application.

In view of the above stated reasons, the Notice of Abandonment is hereby vacated and the holding of abandonment withdrawn.

The application file will be forwarded to the Technology Center's technical support staff for entering the copy of the response submitted with the petition along with the petition for three months extension of time. From there, the file will be forwarded to the examiner for further examination in due course.

Kenneth A. Wieder
Special Program Examiner
Technology Center 2600
Communications

UNITED STATES PATENT AND TRADEMARK OFFICE

UNITED STATES DEPARTMENT OF COMMERCE
United States Patent and Trademark Office
Address: COMMISSIONER FOR PATENTS
P.O. Box 1450
Alexandria, Virginia 22313-1450
www.uspto.gov

MYERS BIGEL SIBLEY & SAJOVEC
PO BOX 37428
RALEIGH, NC 27627

Mail Date: 04/21/2010

Applicant	: Kenneth Iain Cumming	: DECISION ON REQUEST FOR
Patent Number	: 7658938	: RECALCULATION of PATENT
Issue Date	: 02/09/2010	: TERM ADJUSTMENT IN VIEW
Appliction No	: 09/510,560	: OF WYETH AND NOTICE OF INTENT TO
Filed	: 02/22/2000	: ISSUE CERTIFICATE OF CORRECTION
		:

The Request for Recalculation is **GRANTED** to the extent indicated.

The patent term adjustment has been determined to be **0** days. The USPTO will *sua sponte* issue a certificate of correction reflecting the amount of PTA days determined by the recalculation.

Prior to the issuance of the certificate of correction, the USPTO will afford patentee an opportunity to be heard and request reconsideration. Accordingly, patentee has **one month or thirty (30) days**, whichever is longer, to file a request for reconsideration of this patent term adjustment calculation. See 35 U.S.C. 154(b)(3)(B)(ii) and 37 CFR 1.322(a)(4). No extensions of time will be granted under 37 CFR 1.136.

Patentee should use document code PET.OP if electronically filing a request for reconsideration of this patent term adjustment calculation. The patentee must also include the information required by 37 CFR 1.705(b)(2) and the fee required by 37 CFR 1.18(e). If patentee does not file a timely request for reconsideration of this patent term adjustment calculation including the information required by 37 CFR 1.705(b)(2) and the fee required by 37 CFR 1.18(e), the USPTO will issue a certificate of correction reflecting the PTA determination noted above.

Patentee should be aware that in order to preserve the right to review in the United States District Court for the District of Columbia of the USPTO patent term adjustment determination, patentee must ensure that he or she also take the steps required under 35 U.S.C. 154(b)(4)(A) in a timely manner. Nothing in the request for recalculation should be construed as providing an alternative time frame for commencing a civil action under 35 U.S.C. 154(b)(4)(A).

Any questions concerning this decision should be directed to the Office of Patent Legal Administration at 571-272-7702.

UNITED STATES PATENT AND TRADEMARK OFFICE

COMMISSIONER FOR PATENTS
UNITED STATES PATENT AND TRADEMARK OFFICE
P.O. BOX 1450
ALEXANDRIA, VA 22313-1450
www.uspto.gov

CHOATE, HALL & STEWART, LLP
TWO INTERNATIONAL PLACE
BOSTON, MA 02110

COPY MAILED

NOV 30 2006

OFFICE OF PETITIONS

In re Patent No. 6,429,863	:	
Issue Date: August 6, 2002	:	
Application No. 09/510,590	:	NOTICE
Filed: February 22, 2000	:	
Patentee(s): Greg Lopiccolo, et. al.	:	

This is a notice regarding your request for acceptance of a fee deficiency submission under 37 CFR 1.28, filed September 7, 2006. On September 1, 1998, the Court of Appeals for the Federal Circuit held that 37 CFR 1.28(c) is the sole provision governing the time for correction of the erroneous payment of the issue fee as a small entity. **See DH Technology v. Synergystex International, Inc. 154 F.3d 1333, 47 USPQ2d 1865 (Fed. Cir. Sept. 1, 1998).**

The Office no longer investigates or rejects original or reissue applications under 37 CFR 1.56. **1098 Off. Gaz. Pat. Office 502 (January 3, 1989)**. Therefore, nothing in this Notice is intended to imply that an investigation was done.

Your fee deficiency submission under 37 CFR 1.28 is hereby **ACCEPTED**. Therefore, status as a small entity has been removed and all future fees paid must be paid at the large entity rate.

Inquiries related to this communication should be directed to the undersigned at (571) 272-3226.

Andrea Smith
Petitions Examiner
Office of Petitions

UNITED STATES PATENT AND TRADEMARK OFFICE

Commissioner for Patents
United States Patent and Trademark Office
P.O. Box 1450
Alexandria, VA 22313-1450
www.uspto.gov

Paper No. 17

FROMMER LAWRENCE & HAUG
745 FIFTH AVENUE, 10TH FL.
NEW YORK, NY 10151

COPY MAILED

JAN 25 2005

OFFICE OF PETITIONS

In re Application of	:	
Ralf Bohnke et al	:	
Application No. 09/510,652	:	ON PETITION
Filed: February 22, 2000	:	
Attorney Docket No. 450117-02428	:	

This is a decision on the petition under 37 CFR 1.137(b), filed December 3, 2004, to revive the above-identified application.

The petition is **GRANTED.**

The above-identified application became abandoned for failure to reply in a timely manner to the final Office action mailed September 16, 2003, which set a shortened statutory period for reply of three (3) months. No extensions of time under the provision of 37 CFR 1.136(a) were obtained. Accordingly, the above-identified application became abandoned on December 17, 2003.

The above-identified application is being revived solely for purposes of continuity with a Request For Continued Examination (RCE) filed on December 3, 2004.

Telephone inquiries concerning this decision should be directed to Irvin Dingle at (571) 272-3210.

This file is being forwarded to Technology Center AU 2634 for further processing.

Irvin Dingle
Petitions Examiner
Office of Petitions
Office of the Deputy Commissioner
for Patent Examination Policy

UNITED STATES PATENT AND TRADEMARK OFFICE

COMMISSIONER FOR PATENTS
UNITED STATES PATENT AND TRADEMARK OFFICE
P.O. BOX 1450
ALEXANDRIA, VA 22313-1450
WWW.USPTO.GOV

Paper No. 10

SQUIRE, SANDERS & DEMPSEY L.L.P.
14TH FLOOR
8000 TOWERS CRESCENT
TYSONS CORNER VA 22182

COPY MAILED
SEP 01 2004
OFFICE OF PETITIONS

In re Application of
Markku Verkama et al.
Application No. 09/510,893
Filed: February 23, 2000
Attorney Docket No.: 796.330USW1
Title: MANAGEMENT OF PACKET SWITCHED CONNECTIONS IN A MOBILE COMMUNICATIONS NETWORK

DECISION ON PETITION
UNDER 37 C.F.R. §1.183

This is in response to the petition filed November 18, 2003, under 37 C.F.R. §1.182, requesting the entry of a substitute specification. Petitioner has asserted that the English specification which he provided on filing was in fact a translation of the wrong document.

37 C.F.R. §1.182 provides a manner by which practitioners may petition the Commissioner for all situations which are not specifically otherwise provided for in the regulations. 37 C.F.R. §1.125 provides a manner by which practioners may have a substitute specification entered.

As such, this matter is provided for in the regulations, and the petition under 37 C.F.R. §1.182 is **DISMISSED AS INAPPROPRIATE**.

The petition fee of $130.00 will not be refunded, as this petition was not necessitated by any error on the part of the Office.

After the mailing of this decision, the application will be forwarded to Technology Center 2600 for determination of whether the substitute specification should be entered.

Telephone inquiries regarding *this decision* should be directed to the undersigned at (703) 305-0011. Please note that on approximately September 28, 2004, the Office of Petitions will relocate to the new PTO location in Alexandria. Although the mailing address will remain the same, the general phone number for the Office of Petitions which should be used for status requests will change to 571-272-3282, and the telephone number for the undersigned will change to 571-272-3225.

Paul Shanoski
Senior Attorney
Office of Petitions
United States Patent and Trademark Office

UNITED STATES PATENT AND TRADEMARK OFFICE

COMMISSIONER FOR PATENTS
UNITED STATES PATENT AND TRADEMARK OFFICE
P.O. BOX 1450
ALEXANDRIA, VA 22313-1450
WWW.USPTO.GOV

Paper No. 13

SQUIRE, SANDERS & DEMPSEY L.L.P.
14TH FLOOR
8000 TOWERS CRESCENT
TYSONS CORNER VA 22182

COPY MAILED

DEC 1 0 2004

OFFICE OF PETITIONS

In re Application of
Markku Verkama et al.
Application No. 09/510,893
Filed: February 23, 2000
Attorney Docket No.: 796.330USW1
Title: MANAGEMENT OF PACKET SWITCHED CONNECTIONS IN A MOBILE COMMUNICATIONS NETWORK

DECISION ON RENEWED PETITION UNDER 37 C.F.R. §1.182

This is in response to the renewed petition filed October 20, 2004, under 37 C.F.R. §1.182, requesting the entry of a substitute specification.

This application is a continuation of PCT/FI99/00564. Petitioner has asserted that the English specification which he provided on filing was in fact a translation of the wrong document. Both a Finnish application and a PCT were prepared, with the former being different from the latter. Petitioner intended to file a translation of the PCT as the U.S. application, but inadvertently filed a translation of the Finnish application instead. Petitioner would like to substitute the application as filed with a translation of the PCT.

The original petition was submitted on November 18, 2003, and was dismissed as inappropriate via the mailing of a decision on September 1, 2004. The decision on the original petition set forth:

37 C.F.R. §1.182 provides a manner by which practitioners may petition the Commissioner for all situations which are not specifically otherwise provided for in the regulations. 37 C.F.R. §1.125 provides a manner by which practioners may have a substitute specification entered. As such, this matter is provided for in the regulations, and the petition under 37 C.F.R. §1.182 is DISMISSED AS INAPPROPRIATE.

With this renewed petition, Petitioner has indicated that 37 C.F.R. §1.125 does not apply in this situation, as the translation of the PCT "is not submitted as a substitute specification but is instead submitted to correct an error introduced during the PCT International Phase[1]."

It appears that Petitioner submitted the wrong translation for the international phase, and submitted the same translation for the continuation application.

Petitioner has two methods available to him to correct errors due to the submission of a deficient translation. He may submit a amendment, or if the nature or the changes renders the submission of an amendment difficult, he may submit a substitute specification.

Petitioner has chosen the latter route to correct the deficiencies of the specification. Petitioner has submitted a specification which is intended to be substituted for the specification which was submitted on filing. Petitioner would have the Office hold that this substitute specification is not a substitute specification but is rather the correction of an "error introduced during the PCT International Phase[2]." The cause of the error is irrelevant to the matter at hand and therefore, the Office must dismiss this assertion. As stated in the previous decision, 37 C.F.R. §1.125 provides a manner by which practioners may have a substitute specification entered, and this renewed petition is again **DISMISSED AS INAPPROPRIATE**.

If Petitioner feels that he can establish a loss of rights, he is free to file a petition with PCT Legal to have the application converted to a national stage application pursuant to 35 U.S.C. §371, but he cannot establish his objective via the filing if a petition under 37 CFR 1.182.

Alternatively, Petitioner could file a petition to revive the PCT, along with an accurate translation of the application as filed.

After the mailing of this decision, the application will be forwarded to Technology Center 2600 for treatment of the substitute specification submitted with the original petition on November 18, 2003.

The general phone number for the Office of Petitions which should be used for status requests is (571) 272-3282. Telephone inquiries regarding *this decision* should be directed to the undersigned at (571) 272-3225.

Paul Shanoski
Senior Attorney
Office of Petitions
United States Patent and Trademark Office

1 Renewed petition, page 2.
2 Id.

UNITED STATES PATENT AND TRADEMARK OFFICE

Commissioner for Patents
United States Patent and Trademark Office
P.O. Box 1450
Alexandria, VA 22313-1450
www.uspto.gov

MAIL

AUG 1 8 2005

DIRECTOR OFFICE
TECHNOLOGY CENTER 2600

SQUIRE, SANDERS & DEMPSEY L.L.P.
14TH FLOOR
8000 TOWERS CRESCENT
TYSONS CORNER VA 22182

In re Application of
Markku Verkama, et al.
Application No. 09/510,893
Filed: February 23, 2000
For: **MANAGEMENT OF PACKET SWITCHED CONNECTIONS IN A MOBILE COMMUNICATIONS NETWORK**

DECISION ON PETITION

This is a decision on the Petition to Withdraw Holding of Abandonment filed October 20, 2004, pursuant to 37 C.F.R. § 1.181(a). No fee is required.

The application was held abandoned for failure to respond in a timely manner and effective manner to the Office communication mailed June 20, 2003. A Notice of Abandonment was mailed September 24, 2004.

Petitioner alleges to have timely filed a response to said Office communication on December 22, 2003. December 20, 2003 fell on a Saturday. Therefore, a response would be considered timely filed if filed on December 22, 2003 along with a petition for three month extension of time. In support thereof, Petitioner has provided evidence in the way of a copy of the response filed December 22, 2003, a date-stamped post card receipt which itemizes an amendment response of 18 pages and a petition for three month extension of time (among other items), as well as evidence of a cancelled check for the three month extension of time payment.

A review of the file records reveals that the original response filed on December 22, 2003 has been located and matched with the file.

In view of the above stated reason, the Notice of Abandonment is hereby vacated and the holding of abandonment withdrawn. Any inconvenience caused petitioner is regretted.

The petition is **GRANTED**.

The application file is being forwarded to the examiner for further action in appropriate due course.

Dwayne Bost
Special Program Examiner
Technology Center 2600
Communications

UNITED STATES DEPARTMENT OF COMMERCE
Patent and Trademark Office
ASSISTANT SECRETARY OF COMMERCE AND
COMMISSIONER OF PATENTS AND TRADEMARKS
Washington, DC 2023

October 9, 2001

Todd Mattingly
Haynes and Boone
1000 Louisiana St., Suite 4300
Houston, TX 77002-5012

In re application of:
Robert Lance Cook et al. DECISION ON PETITION
Serial No.: 09/510,913
Filed: February 23, 2000

For: MONO-DIAMETER WELLBORE CASING

This is a decision on the petition received on September 07, 2001, to withdraw the holding of abandonment in the above-identified application.

The above-identified application became abandoned for failure to reply within the meaning of 37 C.F.R. 1.113 in timely manner to the Notice to File Missing Parts of Application mailed April 20, 2000. Which set a shortened statutory period for reply of two (2) months. Accordingly, this application became abandoned June 21, 2000. A notice of abandonment was mailed on August 21, 2001.

On September 7, 2000, the office received a communication from the attorney of record. Enclosed was an acknowledgment that the attorney responded to the Notice to File Missing Part on July 3, 2000.

The evidence submitted is sufficient to establish that the petitioners responded to the Notice to File Missing Parts of Application on July 3, 2000.

The petition is hereby GRANTED.

The application has been completed for release to Technology Center 3672.

Telephone inquiries concerning this matter may be directed to Doshie E. Day at (703) 308-3640.

Doshie E. Day
Program Management Assistant
Office Initial Patent Examination.

UNITED STATES PATENT AND TRADEMARK OFFICE

Commissioner for Patents
United States Patent and Trademark Office
P.O. Box 1450
Alexandria, VA 22313-1450
www.uspto.gov

Haynes and Boone, LLP
901 Main Street, Suite 3100
Dallas, TX 75202

COPY MAILED

AUG 27 2007

OFFICE OF PETITIONS

In re Application of

Robert Lane Cook et al.
Application No. 09/510,913
Filed: February 23, 2000
Attorney Docket No. 25791.02

DECISION ON PETITION
TO WITHDRAW
FROM RECORD

This is a decision on the Request to Withdraw as attorney or agent of record under 37 C.F.R. § 1.36(b), filed April 16, 2007.

The request is **NOT APPROVED**.

A grantable request to withdraw as attorney/agent of record must be signed by every attorney/agent seeking to withdraw or contain a clear indication that one attorney is signing on behalf of another/others. A request to withdraw will not be approved unless at least 30 (thirty) days would remain between the date of approval and the later of the expiration date of a time to file a response or the expiration date of the maximum time period which can be extended under 37 C.F.R. § 1.136(a).

The request cannot be approved because no reasons for withdrawal have been provided. The Office cannot, at this time, determine whether practitioner's request is one of the mandatory or permissive reasons enumerated in 37 CFR 10.40. Any subsequent requests must include reasons for withdrawal. Please note that there is a space provided for on PTO/SB/83 (Request to Withdraw as Attorney or Agent) to supply practitioner's reasons.

All future communications from the Office will continue to be directed to the above-listed address until otherwise notified by applicant.

Telephone inquiries concerning this decision should be directed to Terri Williams at 571-272- 2991.

T. Williams

Terri Williams
Petitions Examiner
Office of Petitions

cc: **King & Spalding, LLP**
Todd Mattingly
1100 Louisiana Street
Suite 4000
Houston, TX 77002

UNITED STATES PATENT AND TRADEMARK OFFICE

Commissioner for Patents
United States Patent and Trademark Office
P.O. Box 1450
Alexandria, VA 22313-1450
www.uspto.gov

HEWLETT PACKARD COMPANY
P.O. BOX 272400, 3404 E. HARMONY ROAD
INTELLECTUAL PROPERTY ADMINISTRATION
FORT COLLINS, CO 80527-2400

COPY MAILED

OCT 30 2008

OFFICE OF PETITIONS

In re Patent No. 6,804,810	:	
Issue Date: October 12, 2004	:	
Application No. 09/510,974	:	ON PETITION
Filed: February 21, 2000	:	
Attorney Docket No. 66336/9003	:	

This is a decision on the petition under 37 CFR 1.378(c), filed on June 12, 2008, to accept the unintentionally delayed payment of a maintenance fee for the above-identified patent.

A review of the record shows that the patent issued October 12, 2004 and expired at midnight on October 12, 2008. Since $930 for the 3 ½ year maintenance fee and $130 for the unintentional late payment surcharge were submitted on June 12, 2008, which was before expiration date of the patent, the patent is not expired. In view thereof, the petition is unnecessary and is hereby **DISMISSED AS MOOT**.

This patent file is being referred to Files Repository.

Telephone inquiries concerning this decision should be directed to the undersigned at (571) 272-3226.

Andrea Smith
Petitions Examiner
Office of Petitions

UNITED STATES PATENT AND TRADEMARK OFFICE

COMMISSIONER FOR PATENTS
UNITED STATES PATENT AND TRADEMARK OFFICE
WASHINGTON, D.C. 20231
www.uspto.gov

Anthony Luke Simon
General Motors Corporation
Legal Staff
P O Box 33114
Detroit, MI 48232

Paper No. 11

MAILED

DEC 19 2002

Director's Office
Group 3700

In re Application of
NAGASHIMA ET AL.
Application No.: 09/511,292
Filed: February 23, 2000

DECISION ON PETITION

This is a decision on petitioner's request filed April 30, 2002, to review the holding of abandonment, mailed September 11, 2001.

In support of the request, petitioner has provided a showing of non-receipt of the Office action in accordance with Official Gazette Notice 1156 O.G. 53 (November 16, 1993). MPEP 711.03(c)II.

In view of the above, the Notice of Abandonment mailed March 26, 2002, is in error and is hereby vacated. The holding of abandonment is withdrawn.

The application will be returned to Art Unit 3743.

Summary: Holding of Abandonment Withdrawn.

Richard A. Bertsch, Director
Technology Center 3700

UNITED STATES PATENT AND TRADEMARK OFFICE

Commissioner for Patents
United States Patent and Trademark Office
P.O. Box 1450
Alexandria, VA 22313-1450
www.uspto.gov

TOWNSEND AND TOWNSEND AND CREW, LLP
TWO EMBARCADERO CENTER
EIGHTH FLOOR
SAN FRANCISCO CA 94111-3834

COPY MAILED

APR 2 7 2007

OFFICE OF PETITIONS

In re Application of	:	
Toshihiro Sasai, et al.	:	
Application No. 09/511,408	:	DECISION ON PETITION
Filed: February 23, 2000	:	TO WITHDRAW
Attorney Docket No. 80959	:	FROM RECORD
	:	

This is a decision on the Request to Withdraw as attorney or agent of record under 37 C.F.R. § 1.36(b) filed January 8, 2007.

The request is **NOT APPROVED**.

A grantable request to withdraw as attorney/agent of record must be signed by every attorney/agent seeking to withdraw or contain a clear indication that one attorney is signing on behalf of another/others. A request to withdraw will not be approved unless at least 30 (thirty) days would remain between the date of approval and the later of the expiration date of a time to file a response or the expiration date of the maximum time period which can be extended under 37 C.F.R. § 1.136(a).

The request cannot be approved because the attorneys wish to withdraw by customer number but were not appointed by customer number.

All future communications from the Office will continue to be directed to the above-listed address until otherwise notified by applicant.

Telephone inquiries concerning this decision should be directed to undersigned at 571-272-1642.

April M. Wise
Petitions Examiner
Office of Petitions

cc: THOMAS LESTER WALLACE
IMPERIUM PATENT WORKS
PO BOX 587
SUNOI, CA 94586

PTO/SB/66 (03-09)
Approved for use through 03/31/2012. OMB 0651-0016
U.S. Patent and Trademark Office: U.S. DEPARTMENT OF COMMERCE
Under the Paperwork Reduction Act of 1995, no persons are required to respond to a collection of information unless it displays valid OMB control number.

PETITION TO ACCEPT UNINTENTIONALLY DELAYED PAYMENT OF MAINTENANCE FEE IN AN EXPIRED PATENT (37 CFR 1.378(c))

Patent Number	Issue Date (YYYY-MM-DD)	Application Number	Filing Date (YYYY-MM-DD)	Docket Number (if applicable)
6976031	2005-12-13	09/511,476	2000-02-23	

CAUTION: Maintenance fee (and surcharge, if any) payment must correctly identify: (1) the patent number and (2) the application number of the actual U.S. application leading to issuance of that patent to ensure the fee(s) is/are associated with the correct patent. 37 CFR 1.366(c) and (d).

SMALL ENTITY
☒ Patentee claims, or has previously claimed, small entity status. See 37 CFR 1.27.

LOSS OF ENTITLEMENT TO SMALL ENTITY STATUS
☐ Patentee is no longer entitled to small entity status. See 37 CFR 1.27(g)

NOT Small Entity		Small Entity	
Fee	Code	Fee	Code
○ 3 ½ year	(1551)	◉ 3 ½ year	(2551)
○ 7 ½ year	(1552)	○ 7 ½ year	(2552)
○ 11 ½ year	(1553)	○ 11 ½ year	(2553)

SURCHARGE
The surcharge required by 37 CFR 1.20(i)(2) (Fee Code 1558) must be paid as a condition of accepting unintentionally delayed payment of the maintenance fee.

MAINTENANCE FEE (37 CFR 1.20(e)-(g))
The appropriate maintenance fee must be submitted with this petition.

STATEMENT
THE UNDERSIGNED CERTIFIES THAT THE DELAY IN PAYMENT OF THE MAINTENANCE FEE TO THIS PATENT WAS UNINTENTIONAL

PETITIONER(S) REQUEST THAT THE DELAYED PAYMENT OF THE MAINTENANCE FEE BE ACCEPTED AND THE PATENT REINSTATED

THIS PORTION MUST BE COMPLETED BY THE SIGNATORY OR SIGNATORIES

37 CFR 1.378(d) states: "Any petition under this section must be signed by an attorney or agent registered to practice before the Patent and Trademark Office, or by the patentee, the assignee, or other party in interest."

I certify, in accordance with 37 CFR 1.4(d)(4) that I am

○ An attorney or agent registered to practice before the Patent and Trademark Office

○ A sole patentee

○ A joint patentee; I certify that I am authorized to sign this submission on behalf of all the other patentees.

○ A joint patentee; all of whom are signing this e-petition

◉ The assignee of record of the entire interest

The Assignee of record of the entire interest			
Under 37 CFR 3.71 an assignee becomes of record by filing a statement in compliance with 37 CFR 3.73(b). Signature requirements are set forth in 37 CFR 1.4(d), and the undersigned certifies that he / she is empowered to act on behalf of the assignee of the entire interest			
Signature	/Ron Toupal/	Date (YYYY-MM-DD)	2010-07-16
Name	Ron Toupal, President, Sportspilot, Inc.		
Enter Reel and Frame Number		Remove	
Reel Number	010590	Frame Number	0782
Click ADD for additional Reel Number and Frame Number		Add	

This collection of information is required by 37 CFR 1.378(c). The information is required to obtain or retain a benefit by the public which is to file (and by the USPTO to process) an application. Confidentiality is governed by 35 U.S.C. 122 and 37 CFR 1.11 and 1.14. This collection is estimated to take 1 hour to complete, including gathering, preparing, and submitting the completed application form to the USPTO. Time will vary depending upon the individual case. Any comments on the amount of time you require to complete this form and/ or suggestions for reducing this burden, should be sent to the Chief Information Officer, U.S. Patent and Trademark Office, U.S. Department of Commerce, P.O. Box 1450, Alexandria, VA 22313-1450. DO NOT SEND FEES OR COMPLETED FORMS TO THIS ADDRESS. **This form can only be used when in conjunction with EFS-Web. If this form is mailed to the USPTO, it may cause delays in reinstating the patent.**

Privacy Act Statement

The Privacy Act of 1974 (P.L. 93-579) requires that you be given certain information in connection with your submission of the attached form related to a patent application or patent. Accordingly, pursuant to the requirements of the Act, please be advised that: (1) the general authority for the collection of this information is 35 U.S.C. 2(b)(2); (2) furnishing of the information solicited is voluntary; and (3) the principal purpose for which the information is used by the U.S. Patent and Trademark Office is to process and/or examine your submission related to a patent application or patent. If you do not furnish the requested information, the U.S. Patent and Trademark Office may not be able to process and/or examine your submission, which may result in termination of proceedings or abandonment of the application or expiration of the patent.

The information provided by you in this form will be subject to the following routine uses:

1. The information on this form will be treated confidentially to the extent allowed under the Freedom of Information Act (5 U.S.C. 552) and the Privacy Act (5 U.S.C. 552a). Records from this system of records may be disclosed to the Department of Justice to determine whether the Freedom of Information Act requires disclosure of these records.

2. A record from this system of records may be disclosed, as a routine use, in the course of presenting evidence to a court, magistrate, or administrative tribunal, including disclosures to opposing counsel in the course of settlement negotiations.

3. A record in this system of records may be disclosed, as a routine use, to a Member of Congress submitting a request involving an individual, to whom the record pertains, when the individual has requested assistance from the Member with respect to the subject matter of the record.

4. A record in this system of records may be disclosed, as a routine use, to a contractor of the Agency having need for the information in order to perform a contract. Recipients of information shall be required to comply with the requirements of the Privacy Act of 1974, as amended, pursuant to 5 U.S.C. 552a(m).

5. A record related to an International Application filed under the Patent Cooperation Treaty in this system of records may be disclosed, as a routine use, to the International Bureau of the World Intellectual Property Organization, pursuant to the Patent Cooperation Treaty.

6. A record in this system of records may be disclosed, as a routine use, to another federal agency for purposes of National Security review (35 U.S.C. 181) and for review pursuant to the Atomic Energy Act (42 U.S.C. 218(c)).

7. A record from this system of records may be disclosed, as a routine use, to the Administrator, General Services, or his/her designee, during an inspection of records conducted by GSA as part of that agency's responsibility to recommend improvements in records management practices and programs, under authority of 44 U.S.C. 2904 and 2906. Such disclosure shall be made in accordance with the GSA regulations governing inspection of records for this purpose, and any other relevant (i.e., GSA or Commerce) directive. Such disclosure shall not be used to make determinations about individuals.

8. A record from this system of records may be disclosed, as a routine use, to the public after either publication of the application pursuant to 35 U.S.C. 122(b) or issuance of a patent pursuant to 35 U.S.C. 151. Further, a record may be disclosed, subject to the limitations of 37 CFR 1.14, as a routine use, to the public if the record was filed in an application which became abandoned or in which the proceedings were terminated and which application is referenced by either a published application, an application open to public inspections or an issued patent.

9. A record from this system of records may be disclosed, as a routine use, to a Federal, State, or local law enforcement agency, if the USPTO becomes aware of a violation or potential violation of law or regulation.

UNITED STATES PATENT AND TRADEMARK OFFICE

Commissioner for Patents
United States Patent and Trademark Office
P.O. Box 1450
Alexandria, VA 22313-1450
www.uspto.gov

In re Patent No. 6976031
Issue Date: December 13,2005
Application No. 09511476
Filed: February 23,2000
Attorney Docket No. SPO002

:
:DECISION GRANTING PETITION
:UNDER 37 CFR 1.378(c)
:

This is a decision on the electronic petition, filed July 16,2010 ,under 37 CFR 1.378(c) to accept the unintentionally delayed payment of the 3.5 year maintenance fee for the above-identified patent.

The petition is **GRANTED**.

The maintenance fee is accepted, and the above-identified patent reinstated as of July 16,2010 . This decision also constitutes notice that the fee has been accepted. An electronic copy of the petition and this decision has been created as an entry in the Image File Wrapper. Nevertheless, petitioner should print and retain an independent copy.

Telephone inquiries related to this electronic decision should be directed to the Electronic Business Center at 1-866-217-9197.

UNITED STATES PATENT AND TRADEMARK OFFICE

Commissioner for Patents
United States Patent and Trademark Office
P.O. Box 1450
Alexandria, VA 22313-1450
www.uspto.gov

MAYER, BROWN, ROWE & MAW LLP
1909 K STREET, N.W.
WASHINGTON DC 20006

MAILED

APR 01 2005

Director's Office
Group 3700

Paper No. 7

In re Application of
PARK, BOO YL
Application No.: 09/511,492
Filed: February 23, 2000

DECISION ON PETITION

This is a decision on petitioner's request filed March 5, 2001 to review the holding of abandonment, mailed February 21, 2001 for failure to respond to the Office action of July 26, 2000.

The petition is granted.

In support of the request, petitioner has submitted a copy of a response and a copy of a PTO stamped post card receipt dated August 23, 2000.

In view of the above, the Notice of Abandonment mailed February 21, 2001 is in error and is hereby vacated. The holding of abandonment is withdrawn. This application is being forwarded to the examiner for appropriate action.

Summary: Holding of Abandonment Withdrawn.

Richard A. Bertsch, Director
Technology Center 3700

UNITED STATES PATENT AND TRADEMARK OFFICE

COMMISSIONER FOR PATENTS
UNITED STATES PATENT AND TRADEMARK OFFICE
P.O. BOX 1450
ALEXANDRIA, VA 22313-1450

Paper No. 8

JOHN D. GUGLIOTTA
202 DELAWARE BUILDING
137 SOUTH MAIN STREET
AKRON, OH 44308

COPY MAILED

NOV 1 3 2003

OFFICE OF PETITIONS

ON PETITION

In re Application of
Hoppa
Application No. 09/511,527
Filed: February 23, 2000
Attorney Docket No. 09/511527

This decision concerns the October 16, 2003 petition to withdraw the holding of abandonment in the above-referenced application.

The petition is **GRANTED.**

This application was held abandoned as of May 15, 2003 for failure to timely submit a proper reply to the February 14, 2003 non-final Office Action, which set a 3-month shortened statutory reply period.

The petition asserts that a reply to the Office action was timely mailed on May 12, 2003. In support, the petition encloses a copy of the papers allegedly mailed on May 12, 2003: an amendment and a set of drawings. The first page of the amendment and the transmittal of the drawings each contains a "May 12, 2003" certificate of mailing.[1] Accordingly, the Office concludes that, in response to the February 14, 2003 non-final Office Action, an amendment and a set of drawings were timely mailed, albeit not received in the USPTO. The petition is thus granted. The holding of abandonment in this application is hereby withdrawn.

The application is being returned to Technology Center 2600 for further examination.

Telephone inquiries should be directed to the undersigned at (703) 308-0763.

RC Tang
Petitions Attorney
Office of Petitions

---

[1] Under 37 CFR 1.8(a)(1), correspondence is considered timely filed if: (I) it is mailed or transmitted prior to expiration of the set period for response by being properly addressed to the PTO as set out in 37 CFR 1.1(a) and deposited with the U.S. Postal Service with sufficient postage as first class mail or transmitted to the PTO in accordance with 37 CFR 1.6(d); and (ii) it includes a certificate for each piece of correspondence stating the date of deposit or transmission. The person signing the certificate should have a reasonable basis to expect that the correspondence would be mailed or transmitted on or before the date indicated.

UNITED STATES PATENT AND TRADEMARK OFFICE

Commissioner for Patents
United States Patent and Trademark Office
P.O. Box 1450
Alexandria, VA 22313-1450
www.uspto.gov

In re Patent No. 6425604
Issue Date: July 30,2002
Application No. 09511531
Filed: February 23,2000
Attorney Docket No. 20887/82149

:
:DECISION GRANTING PETITION
:UNDER 37 CFR 1.378(c)
:

This is a decision on the electronic petition, filed July 28,2008 ,under 37 CFR 1.378(c) to accept the unintentionally delayed payment of the 3.5 year maintenance fee for the above-identified patent.

The petition is GRANTED.

The maintenance fee is accepted, and the above-identified patent reinstated as of July 28,2008 . This decision also constitutes notice that the fee has been accepted. An electronic copy of the petition and this decision has been created as an entry in an Image File Wrapper. Nevertheless, petitioner should print and retain an independent copy

Telephone inquires related to this electronic decision should be directed to the Electronic Business Center at 1-866-217-9197.

Under the Paperwork Reduction Act of 1995, no persons are required to respond to a collection of information unless it displays valid OMB control number.

PETITION TO ACCEPT UNINTENTIONALLY DELAYED PAYMENT OF MAINTENANCE FEE IN AN EXPIRED PATENT (37 CFR 1.378(c))

Patent Number	Issue Date (YYYY-MM-DD)	Application Number	Filing Date (YYYY-MM-DD)	Docket Number (if applicable)
6,425,604	2002-07-30	09/511,531	2000-02-23	

CAUTION: Maintenance fee (and surcharge, if any) payment must correctly identify: (1) the patent number and (2) the application number of the actual U.S. application leading to issuance of that patent to ensure the fee(s) is/are associated with the correct patent. 37 CFR 1.366(c) and (d).

SMALL ENTITY
☒ Patentee claims, or has previously claimed, small entity status. See 37 CFR 1.27.

LOSS OF ENTITLEMENT TO SMALL ENTITY STATUS
☐ Patentee is no longer entitled to small entity status. See 37 CFR 1.27(g)

NOT Small Entity			Small Entity		
	Fee	Code		Fee	Code
○	3 ½ year	(1551)	◉	3 ½ year	(2551)
○	7 ½ year	(1552)	○	7 ½ year	(2552)
○	11 ½ year	(1553)	○	11 ½ year	(2553)

SURCHARGE
The surcharge required by 37 CFR 1.20(i)(2) (Fee Code 1558) must be paid as a condition of accepting unintentionally delayed payment of the maintenance fee.

MAINTENANCE FEE (37 CFR 1.20(e)-(g))
The appropriate maintenance fee must be submitted with this petition.

STATEMENT
THE UNDERSIGNED CERTIFIES THAT THE DELAY IN PAYMENT OF THE MAINTENANCE FEE TO THIS PATENT WAS UNINTENTIONAL

PETITIONER(S) REQUEST THAT THE DELAYED PAYMENT OF THE MAINTENANCE FEE BE ACCEPTED AND THE PATENT REINSTATED

THIS PORTION MUST BE COMPLETED BY THE SIGNATORY OR SIGNATORIES

37 CFR 1.378(d) states: "Any petition under this section must be signed by an attorney or agent registered to practice before the Patent and Trademark Office, or by the patentee, the assignee, or other party in interest."

I certify, in accordance with 37 CFR 1.4(d)(4) that I am

○ An attorney or agent registered to practice before the Patent and Trademark Office

○ A sole patentee

○ A joint patentee; I certify that I am authorized to sign this submission on behalf of all the other patentees.

○ A joint patentee; all of whom are signing this e-petition

◉ The assignee of record of the entire interest

The Assignee of record of the entire interest			
Under 37 CFR 3.71 an assignee becomes of record by filing a statement in compliance with 37 CFR 3.73(b). Signature requirements are set forth in 37 CFR 1.4(d), and the undersigned certifies that he / she is empowered to act on behalf of the assignee of the entire interest			
Signature	/R Alan Brink/	Date (YYYY-MM-DD)	2008-07-28
Name	Recreational Technologies International, LLC		
Enter Reel and Frame Number		Remove	
Reel Number	010591	Frame Number	0653
Click ADD for additional Reel Number and Frame Number		Add	

This collection of information is required by 37 CFR 1.378(c). The information is required to obtain or retain a benefit by the public which is to file (and by the USPTO to process) an application. Confidentiality is governed by 35 U.S.C. 122 and 37 CFR 1.11 and 1.14. This collection is estimated to take 1 hour to complete, including gathering, preparing, and submitting the completed application form to the USPTO. Time will vary depending upon the individual case. Any comments on the amount of time you require to complete this form and/ or suggestions for reducing this burden, should be sent to the Chief Information Officer, U.S. Patent and Trademark Office, U.S. Department of Commerce, P.O. Box 1450, Alexandria, VA 22313-1450. DO NOT SEND FEES OR COMPLETED FORMS TO THIS ADDRESS. **This form can only be used when in conjunction with EFS-Web. If this form is mailed to the USPTO, it may cause delays in reinstating the patent.**

Privacy Act Statement

The Privacy Act of 1974 (P.L. 93-579) requires that you be given certain information in connection with your submission of the attached form related to a patent application or patent. Accordingly, pursuant to the requirements of the Act, please be advised that: (1) the general authority for the collection of this information is 35 U.S.C. 2(b)(2); (2) furnishing of the information solicited is voluntary; and (3) the principal purpose for which the information is used by the U.S. Patent and Trademark Office is to process and/or examine your submission related to a patent application or patent. If you do not furnish the requested information, the U.S. Patent and Trademark Office may not be able to process and/or examine your submission, which may result in termination of proceedings or abandonment of the application or expiration of the patent.

The information provided by you in this form will be subject to the following routine uses:

1. The information on this form will be treated confidentially to the extent allowed under the Freedom of Information Act (5 U.S.C. 552) and the Privacy Act (5 U.S.C. 552a). Records from this system of records may be disclosed to the Department of Justice to determine whether the Freedom of Information Act requires disclosure of these record s.

2. A record from this system of records may be disclosed, as a routine use, in the course of presenting evidence to a court, magistrate, or administrative tribunal, including disclosures to opposing counsel in the course of settlement negotiations.

3. A record in this system of records may be disclosed, as a routine use, to a Member of Congress submitting a request involving an individual, to whom the record pertains, when the individual has requested assistance from the Member with respect to the subject matter of the record.

4. A record in this system of records may be disclosed, as a routine use, to a contractor of the Agency having need for the information in order to perform a contract. Recipients of information shall be required to comply with the requirements of the Privacy Act of 1974, as amended, pursuant to 5 U.S.C. 552a(m).

5. A record related to an International Application filed under the Patent Cooperation Treaty in this system of records may be disclosed, as a routine use, to the International Bureau of the World Intellectual Property Organization, pursuant to the Patent Cooperation Treaty.

6. A record in this system of records may be disclosed, as a routine use, to another federal agency for purposes of National Security review (35 U.S.C. 181) and for review pursuant to the Atomic Energy Act (42 U.S.C. 218(c)).

7. A record from this system of records may be disclosed, as a routine use, to the Administrator, General Services, or his/her designee, during an inspection of records conducted by GSA as part of that agency's responsibility to recommend improvements in records management practices and programs, under authority of 44 U.S.C. 2904 and 2906. Such disclosure shall be made in accordance with the GSA regulations governing inspection of records for this purpose, and any other relevant (i.e., GSA or Commerce) directive. Such disclosure shall not be used to make determinations about individuals.

8. A record from this system of records may be disclosed, as a routine use, to the public after either publication of the application pursuant to 35 U.S.C. 122(b) or issuance of a patent pursuant to 35 U.S.C. 151. Further, a record may be disclosed, subject to the limitations of 37 CFR 1.14, as a routine use, to the public if the record was filed in an application which became abandoned or in which the proceedings were terminated and which application is referenced by either a published application, an application open to public inspections or an issued patent.

9. A record from this system of records may be disclosed, as a routine use, to a Federal, State, or local law enforcement agency, if the USPTO becomes aware of a violation or potential violation of law or regulation.

UNITED STATES PATENT AND TRADEMARK OFFICE

COMMISSIONER FOR PATENTS
UNITED STATES PATENT AND TRADEMARK OFFICE
P.O. BOX 1450
ALEXANDRIA, VA 22313-1450
www.uspto.gov
dlw 02-04

Paper No. 26

WILDMAN, HARROLD, ALLEN & DIXON
225 WEST WACKER DRIVE
CHICAGO IL 60606

COPY MAILED

FEB 0 4 2004

OFFICE OF PETITIONS

In re Application of	:	
Raa et al.	:	
Application No. 09/511,582	:	ON PETITION
Filed: 23 February, 2000	:	
Attorney Docket No. CU-2140 TJK	:	

This is a decision on the petition under 37 CFR 1.137(b),[1] filed on 15 January, 2004, to revive the above-identified application.

The petition is **GRANTED**.

This application became abandoned on 10 December, 2002, for failure to file a timely reply to the Notice of Appeal filed on 9 October, 2002. The Appeal Brief must be filed within two (2) months of the filing of a Notice of Appeal.[2] No extensions of the time for reply under 37 CFR 1.136(a) were obtained. The

---

[1]Effective December 1, 1997, the provisions of 37 CFR 1.137(b) now provide that where the delay in reply was unintentional, a petition may be filed to revive an abandoned application or a lapsed patent pursuant to 37 CFR 1.137(b). A grantable petition filed under the provisions of 37 CFR 1.137(b) must be accompanied by:

(1) the required reply, unless previously filed. In a nonprovisional application abandoned for failure to prosecute, the required reply may be met by the filing of a continuing application. In a nonprovisional application filed on or after June 8, 1995, and abandoned for failure to prosecute, the required reply may also be met by the filing of a request for continued examination in compliance with § 1.114. In an application or patent, abandoned or lapsed for failure to pay the issue fee or any portion thereof, the required reply must be the payment of the issue fee or any outstanding balance thereof. In an application abandoned for failure to pay the publication fee, the required reply must include payment of the publication fee.

(2) the petition fee as set forth in 37 CFR 1.17(m);

(3) a statement that the entire delay in filing the required reply from the due date for the reply until the filing of a grantable petition pursuant to 37 CFR 1.137(b) was unintentional. The Commissioner may required additional information where there is a question whether the delay was unintentional; and

(4) any terminal disclaimer (and fee as set forth in 37 CFR 1.20(d)) required pursuant to 37 CFR 1.137(c)).

[2]37 CFR 1.192

appeal was therefore dismissed, and the proceedings as to the rejected claims were terminated.[3] As no claim was allowed, the application became abandoned. Notice of Abandonment was mailed on 20 May, 2003.

On 15 January, 2004, the present petition was filed, accompanied by a Request for Continued Examination (RCE) and an amendment as the submission required under 37 CFR 1.114.

The application will be forwarded to Technology Center 1600 for consideration of the RCE and amendment.

Telephone inquiries concerning this matter may be directed to the undersigned at (703)308-6918.

D Wood

Douglas I. Wood
Senior Petitions Attorney
Office of Petitions

[3] See 37 CFR 1.192(b) & 1.197(c).

UNITED STATES PATENT AND TRADEMARK OFFICE

Commissioner for Patents
United States Patent and Trademark Office
P.O. Box 1450
Alexandria, VA 22313-1450
www.uspto.gov

Daniel M. DeVos
Blakely Sokoloff Taylor & Zafman LLP
12400 Wilshire Boulevard
7th Floor
Los Angeles, CA 90025-1026

MAILED

DEC 06 2004

Technology Center 2100

In re Application of:
Paul C. KOCHER
Application No.: 09/511,645
Filed: February 22, 2000
For: APPARATUS AND METHOD FOR DEMONSTRATING AND CONFIRMING THE STATUS OF A DIGITAL CERTIFICATES AND OTHER DATA

DECISION ON REQUEST TO WITHDRAW AS ATTORNEY OR AGENT

This is a decision on the Request to Withdraw from Representation filed November 4, 2004.

A grantable request to withdraw as attorney of record should indicate thereon the present mailing addresses of the attorney(s) who is/are withdrawing from the record and of the applicant. The request for withdrawal must be signed by every attorney seeking to withdraw or contain a clear indication that one attorney is signing on behalf of another/others. A request to withdraw will not be approved unless at least 30 (thirty) days would remain between the date of approval and the later of the expiration date of a time to file a response or the expiration date of the maximum time period which can be extended under 37 C.F.R. § 1.136(a). The effective date of withdrawal being the date of decision and not the date of request. See M.P.E.P. § 402.06. 37 C.F.R. § 1.36 further requires that the applicant or patent owner be notified of the withdrawal of the attorney or agent.

The request is **GRANTED**.

All future communications from the Office will be directed to the below-listed address until otherwise notified by applicant. This correspondence address is provided by the withdrawn attorney(s). Applicant is reminded of the obligation to promptly notify the Patent and Trademark Office (Office) of any change in correspondence address to ensure receipt of all communications from the Office.

For Vincent N. Trans
Special Program Examiner
Technology Center 2100
Computer Architecture, Software, and
Information Security
571-272-3613

cc: Andy Strobert, Esq.
SKADDEN, ARPS, SLATE, MEAGHER & FLOM LLP
Four Times Square
New York, NY 10036

UNITED STATES PATENT AND TRADEMARK OFFICE

COMMISSIONER FOR PATENTS
UNITED STATES PATENT AND TRADEMARK OFFICE
P.O. BOX 1450
ALEXANDRIA, VA 22313-1450
www.uspto.gov

Paper No.

Daniel M. DeVos
BLAKELY SOKOLOFF TAYLOR & ZAFMAN
12400 Wilshire Boulevard
Seventh Floor
Los Angeles, CA 90025-1030

MAILED

DEC 0 6 2004

Technology Center 2100

In re Application of:
Paul C. Kocher
Application No. 09/511,645
Filed: February 22, 2000
For: APPARATUS AND METHOD FOR DEMONSTRATING AND CONFIRMING THE STATUS OF A DIGITAL CERTIFICATES AND OTHER DATA

DECISION ON REQUEST TO WITHDRAW AS ATTORNEY OR AGENT

This is a decision on the Request To Withdraw from Representation filed November 4, 2004.

A grantable request to withdraw as attorney of record should indicate thereon the present mailing addresses of the attorney(s) who is/are withdrawing from the record and of the applicant. The request for withdrawal must be signed by every attorney seeking to withdraw or contain a clear indication that one attorney is signing on behalf of another/others. A request to withdraw will not be approved unless at least 30 (thirty) days would remain between the date of approval and the later of the expiration date of a time to file a response or the expiration date of the maximum time period which can be extended under 37 C.F.R. § 1. 136(a). The effective date of withdrawal being the date of decision and not the date of request. See M.P.E.P. § 402.06. 37 C.F.R. § 1.36 further requires that the applicant or patent owner be notified of the withdrawal of the attorney or agent.

The request filed November 4, 2004 meets all the requirements. Accordingly the request is **GRANTED**.

All future communications from the Office will be directed to the below-listed address until otherwise notified by applicant. This correspondence address is provided by the withdrawn attorney(s). Applicant is reminded of the obligation to promptly notify the Patent and Trademark Office (Office) of any change in correspondence address to ensure receipt of all communications from the Office.

James R. Matthews

for Vincent N. Trans
Special Program Examiner
Technology Center 2100
Computer Architecture, Software, and
Information Security
(571) 272-3613

cc: Andy Strobert, Esq.
SKADDEN, ARPS, SLATE, MEAGHER & FLOM LLP
Four Times Square
New York, NY 10036

UNITED STATES PATENT AND TRADEMARK OFFICE

Commissioner for Patents
United States Patent and Trademark Office
P.O. Box 1450
Alexandria, VA 22313-1450
www.uspto.gov

WILLIAM H BOLLMAN
MANELLI DENISON & SELTER PLLC
2000 M STREET NW SUITE 700
WASHINGTON DC 20036-3307

COPY MAILED

FEB 26 2007

OFFICE OF PETITIONS

In re Application of
Joseph M. Cannon et al.
Application No. 09/511,701
Filed: February 23, 2000
Attorney Docket No. **97-88**

ON PETITION

This is a decision on the petition filed January 26, 2007 to withdraw the holding of abandonment for the above-identified application. The petition is treated under 37 CFR 1.181.

The petition to withdraw the holding of abandonment is **GRANTED**.

The application was held abandoned on November 16, 2005 for failure to file a timely response to the non-Final Office Action mailed August 15, 2006, which set a three (3) month shortened period for reply. No extensions of time in accordance with 37 CFR 1.136(a) were obtained. Accordingly, a Notice of Abandonment was mailed January 12, 2007.

Petitioner asserts that a proper response, was filed on November 7, 2005. In support, petitioner submits a copy of the reply said to have been filed, which includes a postcard receipt date stamped November 7, 2005 by the United States Patent and Trademark Office.

The evidence submitted corroborates a timely response to the non-Final Office Action. Accordingly, the holding of abandonment is withdrawn and the Notice of Abandonment is vacated. No petition fee Is due and none has been charged.

This matter is being referred to Technology Center 2617 for appropriate action on the amendment filed November 7, 2005, a copy of which was submitted upon petition on January 26, 2007.

Telephone inquiries concerning this matter should be directed to the undersigned Petitions Attorney at (571) 272-3212.

Patricia Faison-Ball

Patricia Faison-Ball
Senior Petitions Attorney
Office of Petitions

UNITED STATES PATENT AND TRADEMARK OFFICE

COMMISSIONER FOR PATENTS
UNITED STATES PATENT AND TRADEMARK OFFICE
WASHINGTON, D.C. 20231
www.uspto.gov

Paper No. 6

COPY MAILED

AUG 7 2001

OFFICE OF PETITIONS

LERNER & GREENBERG PA
P O BOX 2480
HOLLYWOOD , FL 33022-2480

In re Application of
Rast and Kuhn
Application No. 09/511,815
Filed: February 24, 2000
Attorney Docket No. GR 99 P 4036
For: ELECTRO-OPTICAL MODULE

: DECISION REFUSING STATUS
: UNDER 37 CFR 1.47(a)
: AND
: DECISION ON PETITION UNDER
: 37 CFR 1.137(b)

This is a decision on the petition under 37 CFR 1.47(a), filed July 16, 2001.

This is also a decision on the petition under 37 CFR 1.137(b), filed July 16, 2001 to revive the above-identified application.

The petition under 37 CFR 1.47(a) is **dismissed.**

The petition under 37 CFR 1.137(b) is **dismissed.**

Any request for reconsideration under this decision must be submitted within TWO (2) MONTHS from the mail date of this decision. Extensions of time under 37 CFR 1.136(a) are permitted. Any response should be titled "Request for Reconsideration of Petition Under 37 CFR 1.47(a) and Renewed Petition Under 37 CFR 1.137(b)."

This above-cited application became abandoned for failure to respond in an appropriate and timely manner to the "Notice to File Missing Parts of Non-Provisional Application" (the "Notice") mailed May 11, 2000, which indicated that a declaration complying with 37 CFR 1.63 was missing and that a surcharge of $130.00 was due, consequently. The Notice set forth an extendable shortened statutory period for reply of two months. No response was received within the allowable period and the application became abandoned on July 12, 2000.

Consideration under 37 CFR 1.47(a)

On July 16, 2001, petitioner filed the present petition under 37 CFR 1.47(a), a "Combined Declaration for Patent Application and Power of Attorney", and remitted the surcharge due because of the late filing a proper declaration. The petition was accompanied by a Declaration in Support of Petition Under 37 CFR 1.47 (a) as offered by Ms. Denise Lettau, an employee of the above-cited firm, and was also accompanied by other evidentiary documents. The declaration of Ms. Lettau indicates that the German counsel, Maikowski and Ninnemann, retained by the assignee to assist in the prosecution of the above-cited patent application was unable to locate inventor Rast after diligent efforts. Copies of correspondence between the above-cited firm and the German counsel were also provided.

A grantable petition under 37 CFR 147(a) requires:

(1) proof that the nonsigning inventor cannot be reached or refuses to sign the oath or declaration after having been presented with the application papers (specification, claims, and drawings);

(2) an acceptable oath or declaration in compliance with 35 U.S.C. §§ 115 and 116;

(3) the petition fee; and,

(4) a statement of the last known address of the nonsigning inventor.

Petitioner lacks item (1) above.

As to item (1), 37 CFR 1.47(a) provides that an application for patent may be made by the other named inventors on behalf of themselves and the non-signing inventor if, among other requirements, proof of the pertinent facts surrounding the alleged refusal is provided. Section 409.03(d) of the *Manual of Patent Examining Procedure* provides guidance as to what is sufficient proof that the non-signing inventor cannot be reached or refuses to sign the oath or declaration after having been presented with the application papers. This section states, in pertinent part, as follows:

> Before a refusal can be alleged , it must be demonstrated that a bona fide attempt was made to present a copy of the application papers (specification, including claims, drawings, and oath or declaration) to the non-signing inventor for signature. A copy of the application papers should be sent to the last known address of the non-signing inventor, or, if the non-signing inventor is represented by counsel, to the address of the non-signing inventors' attorney.

The instant petition was not accompanied by any evidence that petitioner made a bona fide attempt to present a copy of the application papers to the non-signing inventor. The correspondence accompanying the petition only reveals that the application papers were sent to the assignee, but never to the non-signing inventor at his last known address as required.

Further, petitioner has not properly demonstrated that a 'diligent' effort was made to locate the non-signing inventor . The *Manuel of Patent Examining Procedure*, Section 409.03(d) and provides, in pertinent part, as follows:

> Where inability to find or reach a non-signing inventor "after diligent effort" is the reason for filing under 37 CFR 1.47, an affidavit or declaration of facts should be submitted that fully describes the exact facts which are relied on to establish that a diligent effort was made. . . The affidavit or declaration of facts must be signed, where at all possible, by a person having firsthand knowledge of the facts recited therein. Statements based on hearsay will not normally be accepted. Copies of documentary evidence such as certified mail return receipt, cover letter of instructions, telegrams, etc. that support a finding that the non-signing inventor could not be found or reached should be part of the affidavit or declaration. It is important that affidavit or declaration contain statements of facts as opposed to conclusions.

Petitioner is cautioned that the affidavit or declaration of facts offered to support the petition under 37 CFR 1.47 must be signed, where possible, by a person having firsthand knowledge of the facts recited therein. It appears that the German counsel made the effort to locate the non-signing inventor. As such, a statement as to the diligent efforts made to locate the nonsigning inventor should be provided by a representative of Maikowski and Ninnemann. Because the recitation of facts concerning the efforts to locate the non-signing inventor are not offered by a representative of the German counsel, the recitation of facts is tantamount to hearsay because the facts are offered by a person having second-hand knowledge of the information provided therein. Where at all possible, a petition filed under 37 CFR 1.47 will not be granted based on hearsay statements. It cannot be said that petitioner has provided sufficient proof to warrant the prosecution of the above-cited application without the non-signing inventor because the instant petition lacks sufficient proof that diligent efforts were made to locate the non-signing inventor and there is no indication that the complete application papers were sent to the non-signing inventor.

Consideration under 37 CFR 1.137(b):

Effective December 1, 1997, the provisions of 37 CFR 1.137(b) now provide that where the delay in reply was unintentional, a petition may be filed to revive an abandoned application or a lapsed patent pursuant to 37 CFR 1.137(b). A grantable petition pursuant to 37 CFR 1.137(b) must be accompanied by:

(1) the required reply, unless previously filed. In a nonprovisional application abandoned for

failure to prosecute, the required reply may be met by the filing of a continuing application. In an application or patent, abandoned or lapsed for failure to pay the issue

fee or any portion thereof, the required reply must be the payment of this issue fee or any outstanding balance thereof.

(2) the petition fee as set forth in 37 CFR 1.17(m);

(3) a statement that the **entire** delay in filing the required reply from the due date for the reply until the filing of a grantable petition pursuant to 37 CFR 1.137(b) was unintentional. The Commissioner may require additional information where there is a question whether the delay was unintentional; and

(4) any terminal disclaimer (and fee set forth in 37 CFR 1.20(d) required pursuant to 37 CFR 1.137(c).

The present petition does not satisfy item (1).

As to item (1), petitioner has failed to submit the required reply to the Notice of May 11, 2000. Petitioner must either file a declaration signed by all of the inventors or a grantable petition under 37 CFR 1.47(a).

Conclusion

Any request for reconsideration of this petition under 37 CFR 1.47(a) should provide proof that the application papers were sent to the non-signing inventor at his last known address and a declaration of facts describing the efforts to locate the non-signing inventor attested to by a representative of Maikowski and Ninnemann. Alternatively, petitioner may file a declaration in accordance with 37 CFR 1.63 that is properly executed by both named inventors.

Further correspondence with respect to this matter should be addressed as follows:

By mail: Commissioner for Patents
Box DAC
Washington, DC 20231

By FAX: (703) 308-6919
Attn: Office of Petitions

By hand: Crystal Plaza Four, Suite 3C23
2201 South Clark Place
Arlington, Virginia

Telephone inquiries should be directed to Kenya A. McLaughlin, Petitions Attorney, at (703) 305-0010.

Beverly M. Flanagan
Supervisory Petitions Examiner
Office of Petitions
Office of the Deputy Commissioner
for Patent Examination Policy

UNITED STATES PATENT AND TRADEMARK OFFICE

COMMISSIONER FOR PATENTS
UNITED STATES PATENT AND TRADEMARK OFFICE
WASHINGTON, D.C. 20231
www.uspto.gov

Paper No. 8

COPY MAILED

SEP 2 0 2001

OFFICE OF PETITIONS

Lerner & Greenberg, PA
PO Box 2480
Hollywood, Florida 33022-2480

In re Application of :
Rast and Kuhn :
Application No.: 09/511,815 : ON RENEWED PETITIONS
Filed: February 24, 2000 :
Attorney Docket No: GR 99 P 4036 :
For: ELECTRO-OPTICAL MODULE :

This is in response to the renewed petitions under 37 CFR 1.47(a) and 37 CFR 1.137(b), filed August 31, 2001.

The renewed petition under 37 CFR 1.47(a) is **MOOT.**

The renewed petition under 37 CFR 1.137(b) is **GRANTED**.

The initial petition under 37 CFR 1.47(a) was filed on July 16, 2001, in response to a "Notice to File Missing Parts of Non-Provisional Application" (the "Notice") which indicated that a proper oath or declaration had not been filed and that a surcharge for either a late filing fee or oath or declaration was due and owing. In addition, a petition under 37 CFR 1.137(b) was filed on July 16, 2001, to revive the above-cited application. A decision dismissing both petitions of July 16, 2001, was mailed on August 7, 2001. On August 31, 2001, petitioner filed a renewed petition under 37 CFR 1.47(a) along with a declaration under 37 CFR 1.63 executed by both named inventors and a renewed petition under 37 CFR 1.137(b).

As petitioner has filed a declaration complying with 37 CFR 1.63 for the above-cited application and paid the surcharge, there is no outstanding issue relative to the instant application that could be remedied by a petition filed pursuant to 37 CFR 1.47(a). The renewed petition is, therefore, rendered **moot** by the filing of the declaration.

The filing of the declaration pursuant to 37 CFR 1.63 and payment of the surcharge has satisfied the reply requirement as stipulated by 37 CFR 1.137(b). Therefore, the renewed petition under 37 CFR 1.137(b) is **granted**.

It is noted that the surcharge required when the an oath or declaration compliant with 37 CFR 1.63 is filed late was paid twice. Therefore, a refund of $130.00 will be issued in due course.

This application will be forwarded to the Office of Initial Patent Examination for further processing.

Telephone inquiries should be directed to Kenya A. McLaughlin, Petitions Attorney, at (703) 305-0010.

Beverly M. Flanagan
Supervisory Petitions Examiner
Office of Petitions
Office of the Deputy Commissioner
for Patent Examination Policy

Under the Paperwork Reduction Act of 1995, no persons are required to respond to a collection of information unless it displays valid OMB control number.

PETITION TO ACCEPT UNINTENTIONALLY DELAYED PAYMENT OF MAINTENANCE FEE IN AN EXPIRED PATENT (37 CFR 1.378(c))

Patent Number	Issue Date (YYYY-MM-DD)	Application Number	Filing Date (YYYY-MM-DD)	Docket Number (if applicable)
6466200	2002-10-15	09511831	2000-02-24	2310.0010000

CAUTION: Maintenance fee (and surcharge, if any) payment must correctly identify: (1) the patent number and (2) the application number of the actual U.S. application leading to issuance of that patent to ensure the fee(s) is/are associated with the correct patent. 37 CFR 1.366(c) and (d).

SMALL ENTITY
☒ Patentee claims, or has previously claimed, small entity status. See 37 CFR 1.27.

LOSS OF ENTITLEMENT TO SMALL ENTITY STATUS
☐ Patentee is no longer entitled to small entity status. See 37 CFR 1.27(g)

NOT Small Entity		Small Entity	
Fee	Code	Fee	Code
○ 3 ½ year	(1551)	◉ 3 ½ year	(2551)
○ 7 ½ year	(1552)	○ 7 ½ year	(2552)
○ 11 ½ year	(1553)	○ 11 ½ year	(2553)

SURCHARGE
The surcharge required by 37 CFR 1.20(i)(2) (Fee Code 1558) must be paid as a condition of accepting unintentionally delayed payment of the maintenance fee.

MAINTENANCE FEE (37 CFR 1.20(e)-(g))
The appropriate maintenance fee must be submitted with this petition.

STATEMENT
THE UNDERSIGNED CERTIFIES THAT THE DELAY IN PAYMENT OF THE MAINTENANCE FEE TO THIS PATENT WAS UNINTENTIONAL

PETITIONER(S) REQUEST THAT THE DELAYED PAYMENT OF THE MAINTENANCE FEE BE ACCEPTED AND THE PATENT REINSTATED

THIS PORTION MUST BE COMPLETED BY THE SIGNATORY OR SIGNATORIES

37 CFR 1.378(d) states: "Any petition under this section must be signed by an attorney or agent registered to practice before the Patent and Trademark Office, or by the patentee, the assignee, or other party in interest."

I certify, in accordance with 37 CFR 1.4(d)(4) that I am

◉ An attorney or agent registered to practice before the Patent and Trademark Office

○ A sole patentee

○ A joint patentee; I certify that I am authorized to sign this submission on behalf of all the other patentees.

○ A joint patentee; all of whom are signing this e-petition

○ The assignee of record of the entire interest

Patent Practitioner			
A signature of the applicant or representative is required in accordance with 37 CFR 1.33 and 10.18. Please see 37 CFR 1.4(d) for the form of the signature			
Signature	/GB/	Date (YYYY-MM-DD)	2006-12-08
Name	George S. Bardmesser	Registration Number	44020

This collection of information is required by 37 CFR 1.378(c). The information is required to obtain or retain a benefit by the public which is to file (and by the USPTO to process) an application. Confidentiality is governed by 35 U.S.C. 122 and 37 CFR 1.11 and 1.14. This collection is estimated to take 1 hour to complete, including gathering, preparing, and submitting the completed application form to the USPTO. Time will vary depending upon the individual case. Any comments on the amount of time you require to complete this form and/ or suggestions for reducing this burden, should be sent to the Chief Information Officer, U.S. Patent and Trademark Office, U.S. Department of Commerce, P.O. Box 1450, Alexandria, VA 22313-1450. DO NOT SEND FEES OR COMPLETED FORMS TO THIS ADDRESS. **This form can only be used when in conjunction with EFS-Web. If this form is mailed to the USPTO, it may cause delays in reinstating the patent.**

Privacy Act Statement

The Privacy Act of 1974 (P.L. 93-579) requires that you be given certain information in connection with your submission of the attached form related to a patent application or patent. Accordingly, pursuant to the requirements of the Act, please be advised that: (1) the general authority for the collection of this information is 35 U.S.C. 2(b)(2); (2) furnishing of the information solicited is voluntary; and (3) the principal purpose for which the information is used by the U.S. Patent and Trademark Office is to process and/or examine your submission related to a patent application or patent. If you do not furnish the requested information, the U.S. Patent and Trademark Office may not be able to process and/or examine your submission, which may result in termination of proceedings or abandonment of the application or expiration of the patent.

The information provided by you in this form will be subject to the following routine uses:

1. The information on this form will be treated confidentially to the extent allowed under the Freedom of Information Act (5 U.S.C. 552) and the Privacy Act (5 U.S.C. 552a). Records from this system of records may be disclosed to the Department of Justice to determine whether the Freedom of Information Act requires disclosure of these record s.

2. A record from this system of records may be disclosed, as a routine use, in the course of presenting evidence to a court, magistrate, or administrative tribunal, including disclosures to opposing counsel in the course of settlement negotiations.

3. A record in this system of records may be disclosed, as a routine use, to a Member of Congress submitting a request involving an individual, to whom the record pertains, when the individual has requested assistance from the Member with respect to the subject matter of the record.

4. A record in this system of records may be disclosed, as a routine use, to a contractor of the Agency having need for the information in order to perform a contract. Recipients of information shall be required to comply with the requirements of the Privacy Act of 1974, as amended, pursuant to 5 U.S.C. 552a(m).

5. A record related to an International Application filed under the Patent Cooperation Treaty in this system of records may be disclosed, as a routine use, to the International Bureau of the World Intellectual Property Organization, pursuant to the Patent Cooperation Treaty.

6. A record in this system of records may be disclosed, as a routine use, to another federal agency for purposes of National Security review (35 U.S.C. 181) and for review pursuant to the Atomic Energy Act (42 U.S.C. 218(c)).

7. A record from this system of records may be disclosed, as a routine use, to the Administrator, General Services, or his/her designee, during an inspection of records conducted by GSA as part of that agency's responsibility to recommend improvements in records management practices and programs, under authority of 44 U.S.C. 2904 and 2906. Such disclosure shall be made in accordance with the GSA regulations governing inspection of records for this purpose, and any other relevant (i.e., GSA or Commerce) directive. Such disclosure shall not be used to make determinations about individuals.

8. A record from this system of records may be disclosed, as a routine use, to the public after either publication of the application pursuant to 35 U.S.C. 122(b) or issuance of a patent pursuant to 35 U.S.C. 151. Further, a record may be disclosed, subject to the limitations of 37 CFR 1.14, as a routine use, to the public if the record was filed in an application which became abandoned or in which the proceedings were terminated and which application is referenced by either a published application, an application open to public inspections or an issued patent.

9. A record from this system of records may be disclosed, as a routine use, to a Federal, State, or local law enforcement agency, if the USPTO becomes aware of a violation or potential violation of law or regulation.

UNITED STATES PATENT AND TRADEMARK OFFICE

Commissioner for Patents
United States Patent and Trademark Office
P.O. Box 1450
Alexandria, VA 22313-1450
www.uspto.gov

In re Patent No. 6466200
Issue Date: October 15,2002
Application No. 09511831
Filed: February 24,2000
Attorney Docket No. 2025972-0003

:

:DECISION GRANTING PETITION
:UNDER 37 CFR 1.378(c)

:

This is a decision on the electronic petition, filed December 8,2006 ,under 37 CFR 1.378(c) to accept the unintentionally delayed payment of the 3.5 year maintenance fee for the above-identified patent.

The petition is GRANTED.

The maintenance fee is accepted, and the above-identified patent reinstated as of December 8,2006 . This decision also constitutes notice that the fee has been accepted. An electronic copy of the petition and this decision has been created as an entry in an Image File Wrapper. Nevertheless, petitioner should print and retain an independent copy

Telephone inquires related to this electronic decision should be directed to the Electronic Business Center at 1-866-217-9197.

UNITED STATES DEPARTMENT OF COMMERCE
Patent and Trademark Office
ASSISTANT SECRETARY OF COMMERCE AND
COMMISSIONER OF PATENTS AND TRADEMARKS
Washington, DC 2023

June 12, 2002

Kathryn Doyle
Morgan, Lewis & Bockius
1701 Market St.
Philadelphia, PA 19103-2921

In re application of:
Boris Skurkovich, et al
Serial No.: 09/511,972
Filed: February 24, 2000

DECISION ON PETITION

For: METHOD OF PREVENTION AND TREATMENT OF ASTHMA AND ALLERGIC CONDITIONS

This is a decision on the petition received February 11, 2002, to withdraw the holding of abandonment in the above-identified application.

The above-identified application became abandoned for failure to reply within the meaning of 37 C.F.R. 1.113 in a timely manner to the Notice to File Missing Parts of Application mailed April 19, 2000. Which set a shortened statutory period for rely of two (2) months. Accordingly, this application became abandoned June 20, 2000. A notice of abandonment was mailed November 19, 2001.

On February 11, 2002, the office received a communication from the attorney of record. Enclosed was an acknowledgment that counsel never received the Notice of Missing Parts mailed on April 19, 2000.

The evidence submitted is sufficient to establish that the petitioners did not receive the Notice of Missing Parts mailed April 19, 2000.

The petition is hereby GRANTED.

A new Notice to File Missing Part is enclosed with this Decision setting forth a new response period of two months from the date of the notice.

Telephone inquiries concerning this matter may be directed to Doshie E. Day at (703) 308-3640.

Doshie E. Day
Program Management Assistant
Office Initial Patent Examination.

UNITED STATES PATENT AND TRADEMARK OFFICE

Commissioner for Patents
United States Patent and Trademark Office
P.O. Box 1450
Alexandria, VA 22313-1450
www.uspto.gov

Paper No. 23

JAMES S. FINN, ESQ.
TIME DOMAIN CORPORATION
7057 OLD MADISON PIKE
HUNTSVILLE, AL 35806

COPY MAILED

MAY 2 7 2004

OFFICE OF PETITIONS

In re Application of
Taylor et al.
Application No. 09/511,991
Filed: February 24, 2000
Attorney Docket No. Time.43/JSF04-0001

ON PETITION

This decision concerns the January 7, 2004 petition under 37 CFR 1.137(a) which is being treated as a petition under 37 CFR 1.181 to withdraw the holding of abandonment in the above-referenced application.

The petition is **GRANTED.**

The application was held abandoned as of August 31, 2003 for failure to timely file a proper response to the May 30, 2003 non-final Office Action.

The instant petition asserts that a timely response was submitted by facsimile on August 26, 2003. In support, the petition is accompanied by copies of the purportedly transmitted amendment, transmittal form and "Fax Certification." The transmittal bears an August 26, 2003 certificate of transmission by facsimile. In addition, the "Fax Certification" points out that the facsimile was transmitted to the number "703 746-6070" which has been verified by the Examiner as the proper number.

In view of the above, the amendment should have been considered timely filed on August 26, 2003, and the application should not have been held abandoned. The holding of abandonment in this application is hereby withdrawn, and the December 30, 2003 Notice of Abandonment vacated. The petition is thus granted.

No petition fee is owed. As authorized, the $55 petition fee intended for the §1.137(a) petition has been credited to Deposit Account No. 50-2697.

Finally, the petition, filed by Assignee, uses Assignee's correspondence address which differs from that in the USPTO record for this application. While the decision is being mailed to Assignee at the address indicated in the petition, all future correspondence on this application will be mailed to the current correspondence-address-of-record unless the USPTO is properly instructed otherwise.

The application file is being returned to Technology Center 2600 for continued examination.

Telephone inquiries should be directed to the undersigned at (703) 308-0763.

RC Tang
Petitions Attorney
Office of Petitions

UNITED STATES
PATENT AND
TRADEMARK OFFICE

UNDER SECRETARY OF COMMERCE FOR INTELLECTUAL PROPERTY
AND DIRECTOR OF THE UNITED STATES PATENT AND TRADEMARK OFFICE
WASHINGTON, D.C. 20231
WWW.USPTO.GOV

DEC - 9 2002

#9

PILLSBURY MADISON & SUTRO LLP
INTELLECTUAL PROPERTY GROUP
1100 NEW YORK AVENUE N W NINTH FLOOR
EAST TOWER
WASHINGTON DC 20005-3918

In re Application of
GuoFan Hong et al
Serial No.: 09/512,019
Filed: February 24, 2000
Attorney Docket No.: LEE-109

: PETITION DECISION

This is in response to the petition under 37 CFR 1.181, filed October 15, 2002, to withdraw the abandonment of the above identified application based on non-receipt of an Office action.

A review of the file history shows that the examiner mailed an Office action to applicants on February 13, 2002, setting a one month shortened statutory period for reply. Upon failure to receive a reply the application became technically abandoned no later than August 14, 2002, although a Notice of Abandonment has not yet been mailed to applicants. Applicants state that the Office action was never received and provide statements of non-receipt and docket record evidence which fails to show receipt thereof. In view of applicants' statements and evidence presented, the Notice of Abandonment is hereby withdrawn and the application restored to pending status with the mailing of this decision.

Applicant's petition is **GRANTED**.

As applicants have obtained a copy of the Office action and provided a complete reply thereto with the petition, the application will be forwarded to the examiner for further consideration.

Should there be any questions with respect to this decision, please contact William R. Dixon, Jr., by mail addressed to: Director, Technology Center 1600, Washington, D.C. 20231, or by telephone at (703)308-3824 or by facsimile transmission at (703) 308-7230.

Bruce M. Kisliuk
Director, Technology Center 1600

UNITED STATES PATENT AND TRADEMARK OFFICE

Commissioner for Patents
United States Patent and Trademark Office
P.O. Box 1450
Alexandria, VA 22313-1450
www.uspto.gov

COPY MAILED

NOV 06 2009

OFFICE OF PETITIONS

COOPER & DUNHAM, LLP
30 Rockefeller Plaza
20th Floor
NEW YORK NY 10112

In re Patent No. 6,818,431	:	
Issue Date: November 16, 2004	:	ON PETITION
Application No.: 09/512,019	:	
Filed: February 24, 2009	:	
Attorney Docket No.: LEE-109	:	

This is a decision on the petition, filed October 16, 2009, under 37 CFR 1.378(c) to accept the unintentionally delayed payment of the 3.5-year maintenance fee for the above-identified patent.

The petition is **GRANTED**.

The patent issued November 16, 2004. The grace period for paying the 3.5-year maintenance fee expired at midnight November 16, 2008. Therefore, since the petition was filed within twenty-four months after the six-month grace period provided in 37 CFR 1.362(e), this petition was timely filed under the provisions of 37 CFR 1.378(c).

Accordingly, the maintenance fee in this case of $490.00 will be accepted along with the surcharge of $1640.00[1]. The above-identified patent is hereby reinstated as of the mail date of this decision.

Telephone inquiries concerning this matter may be directed to the undersigned at (571) 272-3222.

Kenya A. McLaughlin
Petitions Attorney
Office of Petitions

[1] It is noted that petitioner only paid $700.00 for the surcharge. The surcharge for the petition under 37 CFR 1.378(c) is $1,640.00. Deposit account 03-3125 will be charged $940.00 accordingly.

UNITED STATES PATENT AND TRADEMARK OFFICE

UNITED STATES DEPARTMENT OF COMMERCE
United States Patent and Trademark Office
Address: COMMISSIONER OF PATENTS AND TRADEMARKS
Washington, D.C. 20231
www.uspto.gov

APPLICATION NO.	FILING DATE	FIRST NAMED INVENTOR	ATTORNEY DOCKET NO.	CONFIRMATION NO.
09/512,127	02/24/2000	Christopher D. Wheeler	P1065	5518

24394 7590 11/01/2002

LARIVIERE, GRUBMAN & PAYNE, LLP
1 LOWER RAGSDALE, BLDG. 1, SUITE 130
P.O. BOX 3140
MONTEREY, CA 93942

EXAMINER
YAO, KWANG BIN

ART UNIT	PAPER NUMBER
2664	

DATE MAILED: 11/01/2002

Please find below and/or attached an Office communication concerning this application or proceeding.

UNITED STATES
PATENT AND
TRADEMARK OFFICE

UNDER SECRETARY OF COMMERCE FOR INTELLECTUAL PROPERTY AND
DIRECTOR OF THE UNITED STATES PATENT AND TRADEMARK OFFICE
WASHINGTON, DC 20231
www.uspto.gov

Technology Center 2600

Paper No. 8

In re Application of:	)	Decision on Petition
CHRISTOPHER D. WHEELER ET AL	)	For Correction of
Serial No. 09/512,127	)	Inventorship
Filed: February 24, 2000	)	
Attorney Docket No. P1065	)	
For: PRIVATE NETWORK ACCESS POINT	)	
ROUTER FOR INTERCONNECTING	)	
AMONG INTERNET ROUTE	)	
PROVIDERS	)	

This is a decision on the petition, filed April 23, 1996, requesting the correction of inventorship under 36 CFR § 1.48(a).

The petition under the Manual of Patent Examination Procedure §201.03 requires an amendment be accompanied by:

(1) a request to correct inventorship that sets forth the desired inventorship change;
(2) a statement from each person being added and from each person being deleted an as inventor that the error occurred without deceptive intention on his or her part;
(3) an oath or declaration by each actual inventor or inventors as required by 37 CFR § 1.63;
(4) the fee set forth in 37 CFR § 1.17(i); and
(5) the written consent of any existing assignee, if any of the original named inventors has executed an assignment.

The petition meet all the above-listed requirements. Accordingly, the petition is **GRANTED**.

Wellington Chin
Supervisory Patent Examiner
Art Unit 2664
(703) 305-4366

UNITED STATES PATENT AND TRADEMARK OFFICE

COMMISSIONER FOR PATENTS
UNITED STATES PATENT AND TRADEMARK OFFICE
WASHINGTON, D.C. 20231
www.uspto.gov

Paper No. 8

SCOTT C. HARRIS
FISH & RICHARDSON P.C.
4350 LA JOLLA VILLAGE DRIVE, SUITE 500
SAN DIEGO, CA 92122

COPY MAILED

OCT 1 7 2001

OFFICE OF PETITIONS

In re Application of :
Zhimin Zhou et al. :
Application No. 09/512,145 :
Filed: February 23, 2000 :
Attorney Docket No. 06816/089003 / CIT2510-C :

NOTICE

This is a notice regarding your request for acceptance of a fee deficiency submission under 37 CFR 1.28. On September 1, 1998, the Court of Appeals for the Federal Circuit held that 37 CFR 1.28(c) is the sole provision governing the time for correction of the erroneous payment of the issue fee as a small entity. **See DH Technology v. Synergystex International, Inc. 154 F.3d 1333, 47 USPQ2d 1865 (Fed. Cir. Sept. 1, 1998).**

The Office no longer investigates or rejects original or reissue applications under 37 CFR 1.56. **1098 Off. Gaz. Pat. Office 502 (January 3, 1989)**. Therefore, nothing in this Notice is intended to imply that an investigation was done.

Your fee deficiency submission under 37 CFR 1.28 is hereby **ACCEPTED**.

Inquiries related to this communication should be directed to the Office of Petitions Staff at (703) 305-9285.

This file is being forwarded to Technology Center 2800.

Irvin Dingle
Petitions Examiner
Office of Petitions
Office of the Deputy Commissioner
for Patent Examination Policy

SPE RESPONSE FOR CERTIFICATE OF CORRECTION

Paper No.: _____

DATE : August 17, 2006

TO SPE OF : ART UNIT 2879

SUBJECT : Request for Certificate of Correction for Appl. No.: 09/512360 Patent No.: 6,878,027 B1

Please respond to this request for a certificate of correction within 7 days.

Please review the requested changes/corrections as shown in the **COCIN** document(s) in the IFW application image. No new matter should be introduced, nor should the scope or meaning of the claims be changed.

Please complete the response (see below) and forward the completed response to scanning using document code **COCX**.

Elisha Evans

Certificates of Correction Branch

703-308-9390 ext. 110

Thank You For Your Assistance

The request for issuing the above-identified correction(s) is hereby:

Note your decision on the appropriate box.

- ☒ **Approved** — All changes apply.
- ☐ **Approved in Part** — Specify below which changes **do not** apply.
- ☐ **Denied** — State the reasons for denial below.

Comments: _____

_____

_____

_____

_____

SPE

2879

Art Unit

UNITED STATES PATENT AND TRADEMARK OFFICE

Commissioner for Patents
United States Patent and Trademark Office
P.O. Box 1450
Alexandria, VA 22313-1450
www.uspto.gov

THOMAS A. BECK
26 ROCKLEDGE LANE
NEW MILFORD CT 06776

COPY MAILED

JAN 07 2008

OFFICE OF PETITIONS

ON PETITION

In re Application of
Jeffrey D. Gelorme et al.
Application No. 09/512,400
Filed: February 24, 2000
Attorney Docket No.: **Y0999-510**

This is a decision on the petition filed February 27, 2001 under 37 CFR 1.137(b), [1] to revive the above-identified application.

The petition is **GRANTED**.

This application became abandoned for failure to timely reply to the non-Final Office Action mailed July 19, 2000. A shortened statutory period of three months was set for replying to the non-Final Office Action. No extensions of time having been requested, this application became abandoned October 20, 2000. Accordingly, a Notice of Abandonment was mailed February 5, 2001.

This matter is being referred to Technology Center 1725 for appropriate action on the amendment filed February 27, 2001.

Telephone inquiries concerning this matter should be directed to the undersigned Petitions Attorney at (571) 272-3212.

Patricia Faison-Ball
Senior Petitions Attorney
Office of Petitions

---

[1] Effective December 1, 1997, the provisions of 37 CFR 1.137(b) now provide that where the delay in reply was unintentional, a petition may be filed to revive an abandoned application or a lapsed patent pursuant to 37 CFR 1.137(b). a grantable petition filed under the provisions of 37 CFR 1.137(b) must be accompanied by:

(1) the required reply, unless previously filed. In a nonprovisional application abandoned for failure to prosecute, the required reply may be met by the filing of a continuing application. In a nonprovisional application filed on or after June 8, 1995, and abandoned for failure to prosecute, the required reply may also be met by the filing of a request for continued examination in compliance with § 1.114. In an application or patent, abandoned or lapsed for failure to pay the issue fee or any portion thereof, the required reply must be the payment of the issue fee or any outstanding balance thereof. In an application abandoned for failure to pay the publication fee, the required reply must include payment of the publication fee.

(2) the petition fee as set forth in 37 CFR 1.17(m);

(3) a statement that the entire delay in filing the required reply from the due date for the reply until the filing of a grantable petition pursuant to 37 CFR 1.137(b) was unintentional. The Commissioner may required additional information where there is a question whether the delay was unintentional; and

(4) any terminal disclaimer (and fee as set forth in 37 CFR 1.20(d)) required pursuant to 37 CFR 1.137(c)).

UNITED STATES PATENT AND TRADEMARK OFFICE

COMMISSIONER FOR PATENTS
UNITED STATES PATENT AND TRADEMARK OFFICE
P.O. BOX 1450
ALEXANDRIA, VA 22313-1450
www.uspto.gov

Paper No. 9

PLUNKETT & COONEY PC
505 NORTH WOODWARD
SUITE 3000
BLOOMFIELD HILLS, MI 48304

COPY MAILED

NOV 21 2003

OFFICE OF PETITIONS

In re Application of Othell Bickerstaff Application No. 09/512,434 Filed: February 25, 2000 Attorney Docket No. BOT-140-A	: : : : :	ON PETITION

This is a decision on the petition under 37 CFR 1.137(b), filed August 28, 2003, to revive the above-identified application.

The petition is **GRANTED**.

The above-identified application became abandoned for failure to reply in a timely manner to the Office action under Ex parte Quayle, 1935 Dec. Comm'r Pat. 11 (1935), mailed August 24, 2001, which set a shortened statutory period for reply of two (2) months. No extensions of time under the provisions of 37 CFR 1.136(a) were obtained. Accordingly, the above-identified application became abandoned on October October 25, 2001.

The file does not indicate a change of address has been submitted, although the address given on the petition differs from the address of record. If appropriate, a change of address should be filed in accordance with MPEP 601.03. A courtesy copy of this decision is being mailed to the address given on the petition; however, the Office will mail all future correspondence solely to the address of record.

Telephone inquiries concerning this decision should be directed to Wan Laymon at (703) 305-9282.

The application file is being forwarded to Technology Center AU 1732.

Wan Laymon
Petitions Examiner
Office of Petitions
Office of the Deputy Commissioner
for Patent Examination Policy

cc: ARNOLD S. WEINTRAUB
THE WEINTRAUB GROUP
32000 NORTHWESTERN HIGHWAY
SUITE 240
FARMINGTON HILLS, MI 48334

UNITED STATES PATENT AND TRADEMARK OFFICE

COMMISSIONER FOR PATENTS
UNITED STATES PATENT AND TRADEMARK OFFICE
P.O. BOX 1450
ALEXANDRIA, VA 22313-1450
www.uspto.gov

RECEIVED
DEC 0 9 2003
OFFICE OF PETITIONS

Paper No. 9

PLUNKETT & COONEY PC
505 NORTH WOODWARD
SUITE 3000
BLOOMFIELD HILLS, MI 48304

COPY MAILED
NOV 2 1 2003
OFFICE OF PETITIONS

In re Application of
Othell Bickerstaff
Application No. 09/512,434
Filed: February 25, 2000
Attorney Docket No. BOT-140-A

ON PETITION

This is a decision on the petition under 37 CFR 1.137(b), filed August 28, 2003, to revive the above-identified application.

The petition is **GRANTED**.

The above-identified application became abandoned for failure to reply in a timely manner to the Office action under Ex parte Quayle, 1935 Dec. Comm'r Pat. 11 (1935), mailed August 24, 2001, which set a shortened statutory period for reply of two (2) months. No extensions of time under the provisions of 37 CFR 1.136(a) were obtained. Accordingly, the above-identified application became abandoned on October October 25, 2001.

The file does not indicate a change of address has been submitted, although the address given on the petition differs from the address of record. If appropriate, a change of address should be filed in accordance with MPEP 601.03. A courtesy copy of this decision is being mailed to the address given on the petition; however, the Office will mail all future correspondence solely to the address of record.

Telephone inquiries concerning this decision should be directed to Wan Laymon at (703) 305-9282.

The application file is being forwarded to Technology Center AU 1732.

Wan Laymon
Petitions Examiner
Office of Petitions
Office of the Deputy Commissioner
for Patent Examination Policy

cc: ARNOLD S. WEINTRAUB
THE WEINTRAUB GROUP
32000 NORTHWESTERN HIGHWAY
SUITE 240
FARMINGTON HILLS, MI 48334

RECEIVED
DEC 10 2003
TC 1700

Under the Paperwork Reduction Act of 1995, no persons are required to respond to a collection of information unless it displays valid OMB control number.

PETITION TO ACCEPT UNINTENTIONALLY DELAYED PAYMENT OF MAINTENANCE FEE IN AN EXPIRED PATENT (37 CFR 1.378(c))

Patent Number	Issue Date (YYYY-MM-DD)	Application Number	Filing Date (YYYY-MM-DD)	Docket Number (if applicable)
6546681	2003-04-15	09512613	2000-02-25	

CAUTION: Maintenance fee (and surcharge, if any) payment must correctly identify: (1) the patent number and (2) the application number of the actual U.S. application leading to issuance of that patent to ensure the fee(s) is/are associated with the correct patent. 37 CFR 1.366(c) and (d).

SMALL ENTITY
☒ Patentee claims, or has previously claimed, small entity status. See 37 CFR 1.27.

LOSS OF ENTITLEMENT TO SMALL ENTITY STATUS
☐ Patentee is no longer entitled to small entity status. See 37 CFR 1.27(g)

NOT Small Entity		Small Entity	
Fee	Code	Fee	Code
○ 3 ½ year	(1551)	◉ 3 ½ year	(2551)
○ 7 ½ year	(1552)	○ 7 ½ year	(2552)
○ 11 ½ year	(1553)	○ 11 ½ year	(2553)

SURCHARGE
The surcharge required by 37 CFR 1.20(i)(2) (Fee Code 1558) must be paid as a condition of accepting unintentionally delayed payment of the maintenance fee.

MAINTENANCE FEE (37 CFR 1.20(e)-(g))
The appropriate maintenance fee must be submitted with this petition.

STATEMENT
THE UNDERSIGNED CERTIFIES THAT THE DELAY IN PAYMENT OF THE MAINTENANCE FEE TO THIS PATENT WAS UNINTENTIONAL

PETITIONER(S) REQUEST THAT THE DELAYED PAYMENT OF THE MAINTENANCE FEE BE ACCEPTED AND THE PATENT REINSTATED

THIS PORTION MUST BE COMPLETED BY THE SIGNATORY OR SIGNATORIES

37 CFR 1.378(d) states: "Any petition under this section must be signed by an attorney or agent registered to practice before the Patent and Trademark Office, or by the patentee, the assignee, or other party in interest."

I certify, in accordance with 37 CFR 1.4(d)(4) that I am

○ An attorney or agent registered to practice before the Patent and Trademark Office

◉ A sole patentee

○ A joint patentee; I certify that I am authorized to sign this submission on behalf of all the other patentees.

○ A joint patentee; all of whom are signing this e-petition

○ The assignee of record of the entire interest

Sole Patentee			
A signature of the applicant or representative is required in accordance with 37 CFR 1.33 and 10.18. Please see 37 CFR 1.4(d) for the form of the signature.			
Signature	/Wayne Trundle/	Date (YYYY-MM-DD)	2007-04-23
Name	Wayne Trundle		

This collection of information is required by 37 CFR 1.378(c). The information is required to obtain or retain a benefit by the public which is to file (and by the USPTO to process) an application. Confidentiality is governed by 35 U.S.C. 122 and 37 CFR 1.11 and 1.14. This collection is estimated to take 1 hour to complete, including gathering, preparing, and submitting the completed application form to the USPTO. Time will vary depending upon the individual case. Any comments on the amount of time you require to complete this form and/ or suggestions for reducing this burden, should be sent to the Chief Information Officer, U.S. Patent and Trademark Office, U.S. Department of Commerce, P.O. Box 1450, Alexandria, VA 22313-1450. DO NOT SEND FEES OR COMPLETED FORMS TO THIS ADDRESS. **This form can only be used when in conjunction with EFS-Web. If this form is mailed to the USPTO, it may cause delays in reinstating the patent.**

Privacy Act Statement

The Privacy Act of 1974 (P.L. 93-579) requires that you be given certain information in connection with your submission of the attached form related to a patent application or patent. Accordingly, pursuant to the requirements of the Act, please be advised that: (1) the general authority for the collection of this information is 35 U.S.C. 2(b)(2); (2) furnishing of the information solicited is voluntary; and (3) the principal purpose for which the information is used by the U.S. Patent and Trademark Office is to process and/or examine your submission related to a patent application or patent. If you do not furnish the requested information, the U.S. Patent and Trademark Office may not be able to process and/or examine your submission, which may result in termination of proceedings or abandonment of the application or expiration of the patent.

The information provided by you in this form will be subject to the following routine uses:

1. The information on this form will be treated confidentially to the extent allowed under the Freedom of Information Act (5 U.S.C. 552) and the Privacy Act (5 U.S.C. 552a). Records from this system of records may be disclosed to the Department of Justice to determine whether the Freedom of Information Act requires disclosure of these record s.

2. A record from this system of records may be disclosed, as a routine use, in the course of presenting evidence to a court, magistrate, or administrative tribunal, including disclosures to opposing counsel in the course of settlement negotiations.

3. A record in this system of records may be disclosed, as a routine use, to a Member of Congress submitting a request involving an individual, to whom the record pertains, when the individual has requested assistance from the Member with respect to the subject matter of the record.

4. A record in this system of records may be disclosed, as a routine use, to a contractor of the Agency having need for the information in order to perform a contract. Recipients of information shall be required to comply with the requirements of the Privacy Act of 1974, as amended, pursuant to 5 U.S.C. 552a(m).

5. A record related to an International Application filed under the Patent Cooperation Treaty in this system of records may be disclosed, as a routine use, to the International Bureau of the World Intellectual Property Organization, pursuant to the Patent Cooperation Treaty.

6. A record in this system of records may be disclosed, as a routine use, to another federal agency for purposes of National Security review (35 U.S.C. 181) and for review pursuant to the Atomic Energy Act (42 U.S.C. 218(c)).

7. A record from this system of records may be disclosed, as a routine use, to the Administrator, General Services, or his/her designee, during an inspection of records conducted by GSA as part of that agency's responsibility to recommend improvements in records management practices and programs, under authority of 44 U.S.C. 2904 and 2906. Such disclosure shall be made in accordance with the GSA regulations governing inspection of records for this purpose, and any other relevant (i.e., GSA or Commerce) directive. Such disclosure shall not be used to make determinations about individuals.

8. A record from this system of records may be disclosed, as a routine use, to the public after either publication of the application pursuant to 35 U.S.C. 122(b) or issuance of a patent pursuant to 35 U.S.C. 151. Further, a record may be disclosed, subject to the limitations of 37 CFR 1.14, as a routine use, to the public if the record was filed in an application which became abandoned or in which the proceedings were terminated and which application is referenced by either a published application, an application open to public inspections or an issued patent.

9. A record from this system of records may be disclosed, as a routine use, to a Federal, State, or local law enforcement agency, if the USPTO becomes aware of a violation or potential violation of law or regulation.

UNITED STATES PATENT AND TRADEMARK OFFICE

Commissioner for Patents
United States Patent and Trademark Office
P.O. Box 1450
Alexandria, VA 22313-1450
www.uspto.gov

In re Patent No. 6546681
Issue Date: April 15,2003
Application No. 09512613
Filed: February 25,2000
Attorney Docket No.

:
:DECISION GRANTING PETITION
:UNDER 37 CFR 1.378(c)
:

This is a decision on the electronic petition, filed April 23,2007 ,under 37 CFR 1.378(c) to accept the unintentionally delayed payment of the 3.5 year maintenance fee for the above-identified patent.

The petition is GRANTED.

The maintenance fee is accepted, and the above-identified patent reinstated as of April 23,2007 . This decision also constitutes notice that the fee has been accepted. An electronic copy of the petition and this decision has been created as an entry in an Image File Wrapper. Nevertheless, petitioner should print and retain an independent copy

Telephone inquires related to this electronic decision should be directed to the Electronic Business Center at 1-866-217-9197.

UNITED STATES PATENT AND TRADEMARK OFFICE

Commissioner for Patents
United States Patent and Trademark Office
Washington, D.C. 20231
www.uspto.gov

Paper No. 10

COPY MAILED

MAY 09 2001

SPECIAL PROGRAMS OFFICE
DAC FOR PATENTS

IRAH H DONNER
THE WILLARD OFFICE BUILDING
HALE AND DORR LLP
1455 PENNSYLVANIA AVENUE NW
WASHINGTON , DC 20004-1008

In re Application of :
Christopher J. Lasher, :
Dennis W. Rice, Michael J. Szesko, :
Michael L. Maher :
Application No. 09/512,734 :
Filed: February 24, 2000 :
Title of Invention: ENHANCED DRUG :
DISPENSING SYSTEM :

DECISION ON PETITION
STATUS
UNDER 37 CFR 1.47(a)

This is in response to a petition under 37 CFR 1.47(a), filed October 27, 2000.

The petition is **dismissed**.

Rule 47 applicant is given TWO (2) MONTHS from the mailing date of this decision to reply, correcting the below-noted deficiencies. Any reply should be entitled "Request for Reconsideration of Petition Under 37 CFR 1.47(a)", and should only address the deficiencies noted below, except that the reply may include an oath or declaration executed by the non-signing inventor. Failure to respond will result in abandonment of the application. Any extensions of time will be governed by 37 CFR 1.136(a).

The above-identified application was filed on February 24, 2000, without a fully executed oath or declaration. Accordingly, on March 27, 2000, a "Notice to File Missing Parts of Application" (hereinafter "Notice") was mailed to Petitioner. The Notice required, in relevant part, a fully executed oath or declaration.

In response, on October 27, 2000, applicant filed the instant petition under 37 CFR 1.47(a). The Petition avers that the nonsigning inventor, Michael L. Maher, has refused to respond to various attempts, and therefore, has refused to sign a declaration of inventorship. In support of the Petition, the Declaration of Irah H. Donner is submitted. The Affidavit avers that Mr. James M. Hunter mailed Mr. Maher the application and declaration at his last known address.

A grantable petition under 37 CFR 1.47(a) requires: (1) proof that the non-signing inventor cannot be reached or refuses to sign the oath or declaration after having been presented with the application papers (specification, claims and drawings); (2) an acceptable oath or declaration in compliance with 35 U.S.C. §§ 115 and 116; (3) the petition fee; and (4) a statement of the last known address of the non-signing inventor. Applicant lacks item (1) as set forth above.

As to item (1), the applicant has failed to establish that the non-

signing inventor, Michael L. Maher, was presented with the application papers (specification, claims and drawings). Petitioner avers that Mr. James M. Hunter mailed the reissue application and declaration to the nonsigning inventor. An affidavit or declaration from Mr. Hunter, or an explanation as to why an affidavit or declaration from Mr. Hunter can not be obtained, is required. *See* MPEP 409.03(d).

Further correspondence with respect to this matter should be addressed as follows:

By mail: Assistant Commissioner for Patents
Box DAC
Washington, D.C. 20231

By FAX: (703) 308-6916
Attn: Office of Petitions

By hand: Crystal Plaza Four, Suite 3C23
2201 S. Clark Place
Arlington, VA

Telephone inquiries related to this decision may be directed to Petitions Attorney Derek L. Woods at (703) 305-0014.

Beverly M. Flanagan
Supervisory Petitions Examiner
Office of Petitions
Office of the Deputy Commissioner
for Patent Examination Policy

UNITED STATES PATENT AND TRADEMARK OFFICE

Commissioner for Patents
United States Patent and Trademark Office
Washington, D.C. 20231
www.uspto.gov

Paper No. 13 **COPY MAILED**

JUL 19 2001

OFFICE OF PETITIONS
A/C PATENTS

IRAH H DONNER
THE WILLARD OFFICE BUILDING
HALE AND DORR LLP
1455 PENNSYLVANIA AVENUE NW
WASHINGTON , DC 20004-1008

In re Application of
Christopher J. Lasher,
Dennis W. Rice, Michael J.
Szesko, Michael L. Maher
Application No. 09/512,734
Filed: February 24, 2000
Title of Invention: ENHANCED
DRUG DISPENSING SYSTEM

DECISION NOTING JOINDER OF
INVENTOR AND PETITION
UNDER 37 CFR 1.47(a) MOOT

This is in response to the Request for Reconsideration of Petition 37 CFR 1.47(a) filed June 29, 2001, noting the joinder of the inventor and rendering the instant Request for Reconsideration of Petition moot.

In view of the joinder of the inventor, in compliance with 37 CFR 1.42, further consideration under 37 CFR 1.47(a) is not necessary and the Reconsideration of Petition is considered to be moot. This application does not have any Rule 1.47(a) status and no such status should appear on the file wrapper. This application need not be returned to this Office for further consideration under 37 CFR 1.47(a).

This application is being forwarded to Technology Center 3700 for further processing.

Telephone inquiries should be directed to Petitions Attorney Derek L. Woods at (703) 305-0014.

Beverly M. Flanagan
Supervisory Petitions Examiner
Office of Petitions
Office of the Deputy Commissioner
for Patent Examination Policy

UNITED STATES PATENT AND TRADEMARK OFFICE

Commissioner for Patents
United States Patent and Trademark Office
P.O. Box 1450
Alexandria, VA 22313-1450
www.uspto.gov

WILMER CUTLER PICKERING HALE AND DORR LLP
399 PARK AVENUE
NEW YORK NY 10022

COPY MAILED

JAN 10 2007

OFFICE OF PETITIONS

In re Application of	:	
Lasher et al.	:	DECISION ON PETITION
Application No. 09/512,734	:	UNDER 37 CFR 1.183
Filed: February 24, 2000	:	
Attorney Docket No. 112764.1101	:	

This is a decision on the petition under 37 CFR 1.47(a), filed on March 2, 2006, which is being treated as a petition under 37 CFR 1.183 seeking waiver of 37 CFR §§ 1.67 and 1.175 where it requires that a supplemental declaration be executed by the named inventors in a broadening reissue application. [1]

The petition is granted.

BACKGROUND

On February 24, 2000, the present application was filed as an application for reissue of U.S. Patent No. 5,720,154, by inventors Lasher, Rice, Szesko, and Mahar, who executed an original reissue declaration.

During the prosecution of the present application, the Office required a supplemental declaration directed to errors in the original patent which were corrected in the present application after the signing of the original reissue declaration.

According to the declaration supplied by applicant's legal representative, Irah Donner, together with the present petition, inventor Mahar could not be located to sign the supplemental declaration after diligent effort to find him.

[1] Once an application has received a fully executed oath or declaration that has been placed on the files for examination, the provisions of 37 CFR 1.47 no longer apply. Rather, the remedy for treating an inventor's refusal to also sign a supplemental oath or declaration is waiver of 37 CFR 1.67. See MPEP 603.

DECISION

35 U.S.C. 251, which is directed to reissue, does not address the signature requirements of a declaration in reissue. 37 CFR 1.172 requires that a reissue declaration be made (and signed) by the inventors, except as otherwise provided (§§ 1.42, 1.43, 1.47), where the scope of the claims of the original patent is being enlarged. 37 CFR 1.175(b)(1), requires that:

> "For any error corrected, which is not covered by the oath or declaration submitted under paragraph (a) of this section, applicant must submit a supplemental oath or declaration stating that every such error arose without any deceptive intention on the part of the applicant."

37 CFR 1.175(b)(1), taken in conjunction with 37 CFR 1.172, requires a supplemental declaration to be signed by all the inventors. This is because all oaths or declarations necessary to fulfill the rule requirements in a reissue application are taken together collectively as a single oath or declaration. Thus, each oath and/or declaration must bear the appropriate signature of all the inventors. *See In re Hayes*, 53 USPQ2d 1222 (Comm'r Pat. 1999).

37 CFR 1.183 permits, in an extraordinary situation, waiver of a rule which is not a requirement of the statute, where justice requires such waiver, and applicant has requested a waiver of the requirement that the 37 CFR 1.175(b)(1) supplemental declaration be signed by an inventor.

The instant petition is accompanied by an appropriate showing that inventor Mahar could not be located after diligent effort. Accordingly, the supplemental declaration of March 2, 2006, signed by inventors Lasher, Rice, and Szesko, will be accepted as though it was signed by joint inventors Lasher, Rice, Szesko and Mahar as required by 37 CFR 1.175(b)(1) taken in conjunction with 37 CFR 1.172. *See* MPEP 602.02. See *In re Hayes, supra.*

CONCLUSION

The present petition to waive 37 CFR 1.172 is granted.

The application is being forwarded to Technology Center Art Unit 3721 for further prosecution.

Please direct any questions related to this decision to Christina Tartera Donnell, Senior Petitions Attorney, at (571) 272-3211.

Kenneth M. Schor
Senior Legal Advisor
Office of Patent Legal Administration

SPE RESPONSE FOR CERTIFICATE OF CORRECTION

Paper No.: ____

DATE : 12/4/08

TO SPE OF : ART UNIT 3721

SUBJECT : Request for Certificate of Correction for Appl. No.: 9/512734 Patent No.: RE40453E

Please respond to this request for a certificate of correction within 7 days.

FOR IFW FILES:

Please review the requested changes/corrections as shown in the **COCIN** document(s) in the IFW application image. No new matter should be introduced, nor should the scope or meaning of the claims be changed.

Please complete the response (see below) and forward the completed response to scanning using document code **COCX**.

FOR PAPER FILES:

Please review the requested changes/corrections as shown in the attached certificate of correction. Please complete this form (see below) and forward it with the file to:

Certificates of Correction Branch (CofC)
South Tower - 9A22
Palm Location 7580

Virginia Tolbert
Certificates of Correction Branch
703-308-9390 ext. 113

Thank You For Your Assistance

The request for issuing the above-identified correction(s) is hereby:
Note your decision on the appropriate box.

- ☐ **Approved** — All changes apply.
- ☐ **Approved in Part** — Specify below which changes **do not** apply.
- ☒ **Denied** — State the reasons for denial below.

Comments: The reference was not initialed by the examiner; therefore, it was not considered.

Rinaldi I. Rada 3721
SPE Supervisory Patent Examiner Art Unit
Group 3700

UNITED STATES PATENT AND TRADEMARK OFFICE

COMMISSIONER FOR PATENTS
UNITED STATES PATENT AND TRADEMARK OFFICE
P.O. BOX 1450
ALEXANDRIA, VA 22313-1450
www.uspto.go

Paper No. 22

FOLEY & LARDNER
P.O. BOX 80278
SAN DIEGO CA 92138-0278

COPY MAILED
AUG 2 0 2003
OFFICE OF PETITIONS

In re Application of	:
Hein et al.	:
Application No. 09/512,736	:
Filed: February 24, 2000	:
Attorney Docket Number:	:
TSRI-184.2con4	:

This is a decision on the petition filed November 18, 2002, requesting a previously filed terminal disclaimer be nullified. The delay in treating this petition is regretted.

The petition is granted.

Petitioner asserts that the terminal disclaimer filed March 19, 2002, is no longer required. As the examiner has concurred, the requested relief has been favorably considered.

This application is being forwarded to Technology Center AU 1638 for correction of PALM and file records consistent with this decision.

Telephone inquiries concerning this matter should be directed to the undersigned at (703) 305-0014.

Derek L. Woods
Petitions Attorney
Office of Petitions

UNITED STATES PATENT AND TRADEMARK OFFICE

Commissioner for Patents
United States Patent and Trademark Office
P.O. Box 1450
Alexandria, VA 22313-1450
www.uspto.gov

Date : December 21, 2006

Patent No. : 6,799,290 B1
Inventor(s) : Kirihata, et al.
Issued : September 28, 2004
Title : **DATA PATH CALIBRATION AND TESTING MODE USING A DATA BUS FOR SEMICONDUCTOR MEMORIES**
Docket No. : 2000P07487US

Re: Request for Certificate of Correction

Consideration has been given your request for the issuance of a certificate of correction for the above-identified patent under the provisions of 37 CFR 1.322 and/or 1.323.

Assignees' names and addresses (assignment data) printed in a patent are based *solely* on information supplied in the appropriate space for identifying the assignment data, i.e., item 3 of the Fee(s) Transmittal Form PTOL-85B. After payment of the issue fee, correction of assignment data submitted on the PTOL-85B can only be done by Certificate of Correction under 37 CFR 1.323, with a request under 37 CFR 3.81(b).

A request for a patent to be corrected to state the name of the assignee must:

A. state that the assignment was submitted for recordation as set forth in 37 CFR 3.11 before issuance of the patent;
B. include a request for a certificate of correction under 37 CFR 1.323 along with the fee set forth in 37 CFR 1.20(a); and
C. include the processing fee set forth in 37 CFR 1.17(i).

If the request is granted, Certificates of Correction Branch will be notified that a Certificate of Correction may be issued.

See Manual of Patent Examining Procedure, Section 1481.01 (Rev. 3) (Oct. 2005).

Applicant has not included items A and or C above, accordingly, the request for Certificate of Correction to add or change the assignee data is denied.

Any request under 37 CFR 3.81(b) should be directed to the following address or facsimile number:

By mail: Mail Stop PETITIONS

Commissioner for Patents
Post Office Box 1450
Alexandria, VA 22313-1450

By hand: Customer Service Window
Mail Stop Petitions
Randolph Building
401 Dulany Street
Alexandria, VA 22314

By fax: 571-273-8300
ATTN: Office of Petitions

If a fee (currently $100) was previously submitted for consideration of a Request for Certificate of Correction, under CFR 1.323, to correct assignment data, no additional fee is required.

Elisha Evans
For Cecelia Newman
Decisions & Certificates
of Correction Branch
(703) 308-9390 or (703) 308-

Infineon Technologies North America Corp.
3000 Centregreen Way
Cary, NC 27513

CBN/eme

BIOGEN, INC. - IP DEPT
JUL 28 2000
REFERRED TO
NOTED BY

UNITED STATES DEPARTMENT OF COMMERCE
Patent and Trademark Office
ASSISTANT SECRETARY AND COMMISSIONER OF PATENTS AND TRADEMARKS
Washington, D.C. 20231

FILE COPY

Paper No. 6

COPY MAILED
JUL 25 2000
SPECIAL PROGRAMS OFFICE
DAC FOR PATENTS

WARREN A. KAPLAN
BIOGEN INC
14 CAMBRIDGE CENTER
CAMBRIDGE, MA 02142

In re Application of :
James G. Barsoum et al :
Application No. 09/512,946 : ON PETITION
Filed: February 25, 2000 :
Attorney Docket No. A033US :

ENTERED AR

This is a decision on the petition under 37 CFR 1.182, filed May 16, 2000, to change the name of one of the inventors.

The petition is granted.

The name of inventor Xiao-Qiang Qin has been changed to:

Albert Xiao Qin

Telephone inquiries concerning this matter may be directed to the undersigned at (703) 305-8859.

This application is being forwarded to Technology Center 1600 for further examination in due course.

Karen Creasy

Karen Creasy
Petitions Examiner
Office of Petitions
Office of the Deputy Assistant Commissioner
for Patent Examination Policy

UNITED STATES PATENT AND TRADEMARK OFFICE

COMMISSIONER FOR PATENT
UNITED STATES PATENT AND TRADEMARK OFFIC
WASHINGTON, D.C. 20231
www.uspto.go

Paper No. 10

John L. Rogitz
Rogitz & Associates
750 "B" Street
Suite 3120
San Diego, California 92101

MAILED

SEP 0 5 2002

Technology Center 2100

In re Application of: Guang-Ho Cha et al.	)	
Application No. 09/512,949	)	
Filed: February 25, 2000	)	**DECISION ON PETITION UNDER 37**
For: INDEXING SYSTEM AND METHOD	)	**C.F.R. § 1.181(a) TO INVOKE**
FOR NEAREST NEIGHBOR	)	**SUPERVISORY AUTHORITY**
SEARCHES IN HIGH	)	
DIMENSIONAL DATA SPACES	)	

This is a decision on a petition, filed 2 August 2002, under 37 C.F.R. § 1.181(a) to invoke supervisory Authority. The petition requested that the objections (1) to the specification (2) to the drawings and (3) to the declaration (as set forth in the Office action mailed 14 June 2002) be withdrawn.

The petition is **GRANTED-IN PART**.

RECENT PROSECUTION BACKGROUND

April 10, 2002 - First non-final office action mailed. Examiner objected to drawings for failing to place textual label for each numbered element in figures 1-7. Examiner objected to disclosure for failing to capitalize trademarks recited therein and for the recitation of a paragraph proscribing the claims from being construed under 35 U.S.C. 112, 6th paragraph.

April 19, 2002 - Petitioner filed a response with substitute drawings and asserted that the inclusion of the paragraph proscribing the claims from being construed under 112 6th was not impermissible by patent laws. Further, petitioner authorized the Examiner to correct improper trademark deficiencies in the specification.

June 6, 2002 - Second non-final office action mailed. Examiner objects to the declaration for non-initialed alterations contained therein. Further, Examiner reiterates objection to drawings for failing to place textual label for each numbered element in figures 3-7. Additionally, Examiner reiterates objection to disclosure for the recitation of a paragraph proscribing the claims from being construed under 35 U.S.C. 112, 6th paragraph.

August 2, 2002 - Petition filed.

RELIEF REQUESTED

The Petition requests the following relief:

A. Withdrawal of the objection to the Declaration.
B. Withdrawal of the objection to the Drawings.
C. Withdrawal of the objection to the Specification.

BASIS OF OPINION

37 C.F.R. §1.63(c)(1) states in relevant part:

...

Unless such information is supplied on an application data sheet in accordance with § 1.76, the oath or declaration must also identify:

(1) The mailing address, and the residence if an inventor lives at a location which is different from where the inventor customarily receives mail, of each inventor.

37 C.F.R. §1.52(c) states in relevant part:

...

(c) (1) Any interlineation, erasure, cancellation or other alteration of the application papers filed ***must be made before the signing*** of any accompanying oath or declaration pursuant to § 1.63 referring to those application papers ***and should be dated and initialed or signed*** by the applicant on the same sheet of paper. Application papers containing alterations made after the signing of an oath or declaration referring to those application papers must be supported by a supplemental oath or declaration under § 1.67. In either situation, a substitute specification (§ 1.125) is required if the application papers do not comply with paragraphs (a) and (b) of this section.

37 C.F.R. 1.84 Standards for Drawings

...

(o) Legends . Suitable descriptive legends may be used subject to approval by the Office, or ***may be required by the examiner where necessary for understanding*** of the drawing. They should contain as few words as possible

OPINION

A. Objection to the Declaration under 37 C.F.R. § 1.52(c)

Petitioner maintains that objecting to the declaration simply because the inventor wrote in additional address information without initialing it is exalting form over substance. Petitioner further maintains that there is no regulatory basis for requiring such initialing since there is no requirement in the MPEP that when an inventor corrects his address as listed in the declaration by adding words to the title of his institution and writing the name of his country, he also initial it.

As a preliminary matter, Petitioner is reminded that, pursuant to 37 C.F.R. §1.63(c), the mailing address is a necessary and an integral part of the declaration. It must therefore conform to the requirements of 37 C.F.R. §1.52(c), according to which any alteration made to any part of the declaration before signing must be dated, initialed or signed. If such alteration was made after the signing of the declaration, initialing and dating said alteration would not be effective, and a supplemental oath or declaration would be required under 37 C.F.R. §1.67.

In the present case, since Petitioner did alter the declaration without actually initialing and dating such alteration before signing the declaration, a new declaration is required in accordance with 1.52(c).

The Examiner's objection to the declaration is therefore proper, and it is hereby **SUSTAINED.**

B. Objection to the Drawings under 37 C.F.R. §§ 1.84 (n)-(o)

Petitioner maintains that 37 C.F.R. §§1.84(n) and (o), under which the drawings are objected to, are cast in permissive language, and do not require that textual labels be placed next to each numbered drawings element.

37 C.F.R. §1.84 (n) requires that symbols in the drawings be adequately described in the specification. 37 C.F.R. §1.84(o) indicates that legends may be used in the drawings, and they must contain as few words as possible. Section 1.84 (o) allows the Examiner to require legends "where necessary for understanding of the drawing." We agree with Petitioner that sections (n) and (o) of 37 C.F.R. §1.84 do not provide any support for the Examiner's objection requesting Petitioner to place textual labels next to the numbered drawings elements ***where they are not necessary for the understanding of the drawing***. Consequently, there is no need for labels on standard mathematical coordinate systems.

Accordingly, the objection to the drawings is overruled, and it is hereby **WITHDRAWN**.

C. Objection to the Specification under 37 C.F.R. § 1.71

Petitioner maintains that there is no provision in 37 C.F.R. §1.71 for law interpretations for the paragraph on pages 12-13 of the specification proscribing the claims from being construed under 35 U.S.C. 112, 6th paragraph.

A review of the 37 C.F.R. §1.71 reveals that such request to delete from the specification the paragraph proscribing the interpretation of the claims under 35 U.S.C. 112, 6th is not supported by the cited section of the MPEP.

Petitioner is free to make statements regarding patent laws. Petitioner's statements, however, will have no bearing on the Examiner's obligation to apply the laws as required in the patent examining guidelines and the controlling case law. Examiner's objection to the specification is overruled, and it is hereby **WITHDRAWN**.

Accordingly, the Petition is **GRANTED-IN PART**.

CONCLUSION

The Examiner is directed to withdraw the aforementioned objections to the drawings and the specification, and is specifically directed to mention such withdrawal in the next Office communication.

The application is being forwarded o the Examiner to issue an appropriate action in compliance with the guidelines set out above.

Any request for reconsideration must be filed within two months of the mailing date of this decision.

Inquiries with respect to this decision may be directed to Pinchus M. Laufer at (703) 306-4160.

Pinchus M. Laufer
Special Programs Examiner
Technology Center 2100
Computer Security, Architecture, and Software
(703) 306-4160

SPE RESPONSE FOR CERTIFICATE OF CORRECTION

Paper No.: ____

DATE : 2/14/08

TO SPE OF : ART UNIT 2626

SUBJECT : Request for Certificate of Correction for Appl. No.: 9/512963 Patent No: 7152031 B1

A response is requested with respect to a request for a certificate of correction.

With respect to the change(s) requested to correct Office and/or Applicant's errors, should the patent read as shown in the certificate of correction attached herewith or the COCIN document(s), in IFW images for the above-identified patented application? No new matter should be introduced, nor should the scope or meaning of the claims be changed.

If the response is for an IFW, within **7** days, please complete and forward the response, to the employee (named below) via scanning into application images, using document code **COCX**.

If the response is for a paper file wrapper, please complete the response and forward the response with the paper file wrapper, to the employee (named below), within **7** days, to:

Certificates of Correction Branch (CofC)
South Tower - 9A22
Palm Location 7580

VIRGINIA TOLBERT
Certificates of Correction Branch
703-308-9390 ext. 113

Thank You For Your Assistance

The request for issuing the above-identified correction(s) is hereby:
Note your decision on the appropriate box.

- ☐ **Approved** — All changes apply.
- ☐ **Approved in Part** — Specify below which changes **do not** apply.
- ☐ **Denied** — State the reasons for denial below.

Comments: The request for corrections is approved in part. More specifically The following amendments are denied: "Column 16 line 2, "1. A method for building..", "Column 17 line 16, "a user" should read", "Column 17, line 52, "a user" should read", "Column 18, line 4, "a user" should read", "Column 18, line 20, "a user" should read" The proposed amendments alter the scope and were not approved during prosecution.

/David R. Hudspeth/ — **SPE**

2626 — **Art Unit**

UNITED STATES PATENT and TRADEMARK OFFICE
UNDER SECRETARY OF COMMERCE FOR INTELLECTUAL PROPERTY AND
DIRECTOR OF THE UNITED STATES PATENT AND TRADEMARK OFFICE
WASHINGTON, D.C. 20231
WWW.USPTO.GOV

Mailed: MAY - 3 2002

spg
Paper Number 13

In re application of	:	
Jing Wen Tzeng et al.	:	DECISION
Serial No.: 09/513,001	:	ON
Filed: February 25, 2000	:	PETITION
For: THERMAL MANAGEMENT SYSTEM	:	

This is a response to the REQUEST FOR WITHDRAWAL OF HOLDING OF ABANDONMENT OR IN THE ALTERNATIVE, PETITION TO REVIVE, filed March 19, 2002. The requestor asks that the abandonment as set forth in the Notice of Abandonment of February 6, 2002 for failure to timely file a proper response to the Office letter of June 13, 2001 be withdrawn since the applicants did timely file a response on December 7, 2001.

DECISION

Since requestor asserts that the papers were filed in a timely manner, the request is accepted as a petition under 37 C.F.R. 1.181 (no fee). **The original paper of December 7, 2001 has been located and matched with the present file**.

Therefore, the Notice of Abandonment of February 6, 2002 has been withdrawn. The amendment has been entered and forwarded to the examiner for prompt consideration thereof. An office action will follow in due course.

The Petition is **DISMISSED**.

Richard V. Fisher

Richard V. Fisher, Director
Technology Center 1700
Chemical and Materials Engineering

LUCIAN WAYNE BEAVERS
WADDEY & PATTERSON
414 UNION STREET, SUITE 2020
BANK OF AMERICA PLAZA
NASHVILLE TN 37219

UNITED STATES PATENT AND TRADEMARK OFFICE

Commissioner for Patents
United States Patent and Trademark Office
Washington, D.C. 20231
www.uspto.gov

Paper No. 15

Haverstock & Owens
162 North Wolfe Road
Sunnyvale, CA 94086

COPY MAILED

FEB 0 5 2003

OFFICE OF PETITIONS

In re Application of
Connie Blackburn et al.
Application No. 09/513,029
Filed: February 25, 2000
Attorney Docket No. AVALUC-00401

ON PETITION

This is a decision on the petition under 37 CFR 1.137(b), filed January 27, 2003, to revive the above-identified application.

The petition is **GRANTED**.

The above-identified application became abandoned for failure to reply in a timely manner to the non-final Office action mailed May 17, 2002, which set a shortened statutory period for reply of three (3) months. No extensions of time under the provisions of 37 CFR 1.136(a) were obtained. Accordingly, the above-identified application became abandoned on August 18, 2002.

An extension of time under 37 CFR 1.136 must be filed prior to the expiration of the maximum extendable period for reply. See In re Application of S., 8 USPQ2d 1630, 1631 (Comm'r Pats. 1988). Accordingly, since the $930 extension of time submitted with the petition on January 27, 2003 was subsequent to the maximum extendable period for reply, this fee is unnecessary and will be credited to petitioner's deposit account.

Telephone inquiries concerning this decision should be directed to Latrice Bond at (703) 308-6911.

The application file is being forwarded to Technology Center AU 2645 for further processing.

Latrice Bond

Latrice Bond
Paralegal Specialist
Office of Petitions
Office of the Deputy Commissioner
for Patent Examination Policy

UNITED STATES PATENT AND TRADEMARK OFFICE

COMMISSIONER FOR PATENT
UNITED STATES PATENT AND TRADEMARK OFFIC
WASHINGTON, D.C. 20231
www.uspto.go

Paper No. 16

OCT 21 2002

FITZPATRICK, CELLA, HARPER
& SCINTO
30 Rockefeller Plaza
New York, NY 10112-3801

In re Application of:	:	
Yamamoto *et al.*	:	DECISION ON PETITION
Application No. 09/513,129	:	TO WITHDRAW HOLDING
Filed: February 25, 2000	:	OF ABANDONMENT
Attorney Docket No. 03500.014299	:	

This is a decision on the request filed May 22, 2002, to withdraw the holding of abandonment. This request is being treated as a petition under 37 CFR § 1.181, to withdraw the holding of abandonment in the above application. No petition fee is required.

The petition to withdraw the holding of abandonment is **GRANTED.**

The application was held abandoned for the failure timely pay the issue fee in response to a Notice of Allowance and Issue Fee Due mailed on November 28, 2001. A Notice of Abandonment was mailed on May 06, 2002.

Petitioner asserts that on January 10, 2002, a Request for Continued Examination (RCE) under 37 CFR § 1.114, was filed. The RCE was accompanied by a Preliminary Amendment. In support of this assertion, petitioner has submitted a copy of the RCE, a copy of the Preliminary Amendment and a copy of the itemized postcard receipt bearing a date stamp of receipt in the United States Patent and Trademark Office of January 10, 2002 of an RCE, a check for the fee, a Preliminary Amendment and a transmittal letter.

A review of the application file reveals the above noted RCE was not matched with the application file wrapper at the time of mailing of the Notice of Abandonment. The above identified RCE filed January 10, 2002 has since been located and matched with the file wrapper.

For the above stated reason, the petition is granted. The Notice of Abandonment is hereby vacated and the holding of abandonment withdrawn. The application is restored to pending status.

The application file is being forwarded to the Technology Center 2800 support staff for processing the RCE. From there, the application will be forwarded to the examiner for taking

appropriate action.

Inquiries regarding this decision should be directed to Clayton E. LaBalle at (703) 308-0519.

Hien Phan, Special Programs Examiner
Technology Center 2800
Semiconductors, Electrical and Optical
Systems and Components

UNITED STATES PATENT AND TRADEMARK OFFICE

COMMISSIONER FOR PATENTS
UNITED STATES PATENT AND TRADEMARK OFFICE
P.O. BOX 1450
ALEXANDRIA, VA 22313-1450
WWW.USPTO.GOV

PAPER NO. 30

COPY MAILED
AUG 07 2003
OFFICE OF PETITIONS

FITZPATRICK CELLA HARPER & SCINTO
30 ROCKEFELLER PLAZA
NEW YORK NY 10112

In re Application of
Keisuke Yamamoto, et al.
Application No.09/513,129
Filed:February 25, 2000
Attorney Docket No. 35.C14299

ON PETITION

This is a decision on the petition under 37 CFR 1.313(c)(2), filed August 1, 2003, to withdraw the above-identified application from issue after payment of the issue fee.

The petition is **GRANTED**.

The above-identified application is withdrawn from issue for consideration of a submission under 37 CFR 1.114 (request for continued examination). See 37 CFR 1.313(c)(2).

Petitioner is advised that the issue fee paid on April 25, 2003, in the above-identified application cannot be refunded. If, however, the above-identified application is again allowed, petitioner may request that it be applied towards the issue fee required by the new Notice of Allowance. [1]

After the application is received in the Office of Petition, the file will be forwarded to Technology Center AU 2821 for further processing of the request for continued examination under 37 CFR 1.114.

Sherry D. Brinkley
Petitions Examiner
Office of Petitions
Office of the Deputy Commissioner
for Patent Examination Policy
(703) 305-9220

[1]The request to apply the issue fee to the new Notice may be satisfied by completing and returning the new Issue Fee Transmittal Form PTOL-85(b), which includes the following language thereon: "Commissioner for Patents is requested to apply the Issue Fee and Publication Fee (if any) or re-apply any previously paid issue fee to the application identified above." Petitioner is advised that, whether a fee is indicated as being due or not, the Issue Fee Transmittal Form **must** be completed and timely submitted to avoid abandonment. Note the language in bold text on the first page of the Notic of Allowance and Fee(s) Due (PTOL-85).

SPE RESPONSE FOR CERTIFICATE OF CORRECTION

Paper No.:20061004

DATE : October 4, 2006

TO SPE OF : ART UNIT 2821

SUBJECT : Request for Certificate of Correction on Patent No.: 6876156 B1

A response is requested with respect to the accompanying request for a certificate of correction.

Please complete this form and return with file, within **7** days to:
Certificates of Correction Branch - PK 3-910
Palm location **7590** - Tel. No. 305-8201

With respect to the change(s) requested, correcting Office and/or Applicant's errors, should the patent read as shown in the certificate of correction? No new matter should be introduced, nor should the scope or meaning of the claims be changed.

Thank You For Your Assistance **Certificates of Correction Branch**

The request for issuing the above-identified correction(s) is hereby:
Note your decision on the appropriate box.

☒ **Approved** **All** changes apply.

☐ **Approved in Part** Specify below which changes **do not** apply.

☐ **Denied** State the reasons for denial below.

Comments:

Certificate of Correction filed September 08, 2006 has been approved.

SPE: Tim Callahan **Art Unit** 2821

03500.014299

OIPE IAP68 SEP 0 8 2006 PATENT & TRADEMARK OFFICE

PATENT

Case 5

IN THE UNITED STATES PATENT AND TRADEMARK OFFICE

In re Patent of:	)	
	:	Examiner: Tuyet Thi Vo
KEISUKE YAMAMOTO ET AL.	)	
	:	Group Art Unit: 2821
Appln. No.: 09/513,129	)	
	:	
Filed: February 25, 2000	)	
	:	
For: ELECTRON-EMITTING DEVICE, ELECTRON SOURCE USING THE SAME, AND IMAGE FORMING APPARATUS USING THE SAME	)	
	:	
U.S. Patent No.: 6,876,156 B1	)	
	:	
Issued: April 5, 2005	:	September 7, 2006

Commissioner for Patents
P.O. Box 1450
Alexandria, VA 22313-1450

Certificate SEP 1 3 2006 of Correction

CERTIFICATE OF CORRECTION
UNDER RULES 322 AND 323

Sir:

It is respectfully requested that a Certificate of Correction be issued by the Patent and Trademark Office due to errors which appear in the printed patent as a result of Patent and Trademark Office mistakes, and mistakes of a clerical, typographical, or minor character, which were not the fault of the Patent and Trademark Office. A Certificate of Correction form, in duplicate, is enclosed.

09/11/2006 JADDO1 00000382 6876156
01 FC:1811 103.00 OP

SEP 1 3 2006

Accompanying this letter is a check for $100.00 to cover the statutory fee for such Certificate of Correction.

Patentees' undersigned attorney may be reached in our New York office by telephone at (212) 218-2100. All correspondence should continue to be directed to our address given below.

Respectfully submitted,

Raymond A. DiPerna
Attorney for Patentees
Registration No. 44,063

FITZPATRICK, CELLA, HARPER & SCINTO
30 Rockefeller Plaza
New York, New York 10112-3801
Facsimile: (212) 218-2200

Staple Here Only!

PRINTER'S TRIM LINE

UNITED STATES PATENT AND TRADEMARK OFFICE

CERTIFICATE OF CORRECTION

PATENT NO. : 6,876,156 B1

DATED : April 5, 2005

INVENTOR(S) : KEISUKE YAMAMOTO ET AL.

It is certified that error appears in the above-identified patent and that said Letters Patent is hereby corrected as shown below:

ON COVER PAGE AT (*) NOTICE

Insert: -- This patent issued on a continued prosecution application filed under 37 C.F.R. 1.53(d), and is subject to the twenty year patent term provisions of 35 U.S.C. § 154(a)(2).--.

ON COVER PAGE AT (56) U.S. PATENT DOCUMENTS

Insert: --5,728,435 3/1998 Geis et al.--.

ON COVER PAGE AT (56) FOREIGN PATENT DOCUMENTS

"JP 7-235255 9/1995" should be deleted.

COLUMN 2

Line 10, "even" should read --ever--;
Line 25, "relation ship" should read --relationship--; and
Line 53, "are" should be deleted--.

COLUMN 3

Line 30, "at the deposit" should read --deposit and--.

COLUMN 5

Line 47, "By the vacuum" should read --(Step-b) ¶ By the vacuum--.

MAILING ADDRESS OF SENDER:
FITZPATRICK, CELLA, HARPER & SCINTO
30 Rockefeller Plaza
New York, New York 10112-3801
(212) 218-2100 - Telephone
(212) 218-2200 - Facsimile

PATENT NO. U.S. 6,876,156 B1

No. of add'l. copies @ 30¢ per page

Form PTO 1050 (Rev. 3-82)

513138v1

SEP 1 3 2006

Staple Here Only!

PRINTER'S TRIM LINE

UNITED STATES PATENT AND TRADEMARK OFFICE

CERTIFICATE OF CORRECTION

PATENT NO. : 6,876,156 B1

DATED : April 5, 2005

INVENTOR(S) : KEISUKE YAMAMOTO ET AL.

It is certified that error appears in the above-identified patent and that said Letters Patent is hereby corrected as shown below:

COLUMN 6

Line 14, "fined" should read --find--.

COLUMN 10

Line 26, "having" should read --comprising--;
Line 30, "characterized in that" should read --wherein--;
Line 34, "provided with" should read --comprising--;
Line 41, "characterized in that" should read --wherein--.

COLUMN 13

Line 16, "substrate," should read --substrate;--.

MAILING ADDRESS OF SENDER:
FITZPATRICK, CELLA, HARPER & SCINTO
30 Rockefeller Plaza
New York, New York 10112-3801
(212) 218-2100 - Telephone
(212) 218-2200 - Facsimile

PATENT NO. U.S. 6,876,156 B1

No. of add'l. copies @ 30¢ per page

Form PTO 1050 (Rev. 3-82)

513138v1

13 2005

Staple Here Only!

PRINTER'S TRIM LINE

UNITED STATES PATENT AND TRADEMARK OFFICE

CERTIFICATE OF CORRECTION

PATENT NO. : 6,876,156 B1

DATED : April 5, 2005

INVENTOR(S) : KEISUKE YAMAMOTO ET AL.

It is certified that error appears in the above-identified patent and that said Letters Patent is hereby corrected as shown below:

ON COVER PAGE AT (*) NOTICE

Insert: -- This patent issued on a continued prosecution application filed under 37 C.F.R. 1.53(d), and is subject to the twenty year patent term provisions of 35 U.S.C. § 154(a)(2).--.

ON COVER PAGE AT (56) U.S. PATENT DOCUMENTS

Insert: --5,728,435 3/1998 Geis et al.--.

ON COVER PAGE AT (56) FOREIGN PATENT DOCUMENTS

"JP 7-235255 9/1995" should be deleted.

COLUMN 2

Line 10, "even" should read --ever--;
Line 25, "relation ship" should read --relationship--; and
Line 53, "are" should be deleted--.

COLUMN 3

Line 30, "at the deposit" should read --deposit and--.

COLUMN 5

Line 47, "By the vacuum" should read --(Step-b) ¶ By the vacuum--.

MAILING ADDRESS OF SENDER:

FITZPATRICK, CELLA, HARPER & SCINTO
30 Rockefeller Plaza
New York, New York 10112-3801
(212) 218-2100 - Telephone
(212) 218-2200 - Facsimile

PATENT NO. U.S. 6,876,156 B1

No. of add'l. copies @ 30¢ per page

Form PTO 1050 (Rev. 3-82)

513138v1

Staple Here Only!

PRINTER'S TRIM LINE

UNITED STATES PATENT AND TRADEMARK OFFICE

CERTIFICATE OF CORRECTION

PATENT NO. : 6,876,156 B1

DATED : April 5, 2005

INVENTOR(S) : KEISUKE YAMAMOTO ET AL.

It is certified that error appears in the above-identified patent and that said Letters Patent is hereby corrected as shown below:

COLUMN 6

Line 14, "fined" should read --find--.

COLUMN 10

Line 26, "having" should read --comprising--;
Line 30, "characterized in that" should read --wherein--;
Line 34, "provided with" should read --comprising--;
Line 41, "characterized in that" should read --wherein--.

COLUMN 13

Line 16, "substrate," should read --substrate;--.

MAILING ADDRESS OF SENDER:
FITZPATRICK, CELLA, HARPER & SCINTO
30 Rockefeller Plaza
New York, New York 10112-3801
(212) 218-2100 - Telephone
(212) 218-2200 - Facsimile

PATENT NO. U.S. 6,876,156 B1

No. of add'l. copies @ 30¢ per page

Form PTO 1050 (Rev. 3-82)

513138v1

: 3 2006

UNITED STATES PATENT AND TRADEMARK OFFICE

COMMISSIONER FOR PATENTS
UNITED STATES PATENT AND TRADEMARK OFFICE
WASHINGTON, D.C. 20231
www.uspto.gov

Paper No. 9

WAGNER, MURABITO & HAO LLP
Two North Market Street
Third Floor
San Jose, CA 95113

COPY MAILED

OCT 0 5 2000

OFFICE OF PETITIONS
A/C PATENTS

In re Application of
Hadi Partovi et al.
Application No. 09/513,236
Filed: March 13, 2000
For: METHOD AND APPARATUS FOR CONTENT PERSONALIZATION OVER A TELEPHONE INTERFACE WITH ADAPTIVE PERSONALIZATION

DECISION ACCORDING STATUS UNDER 37 CFR 1.47(a)

This is a decision on the petition under 37 CFR 1.47(a) filed June 15, 2000

The petition is granted.

The application papers have been reviewed and found in compliance with 37 CFR 1.47(a). This application is hereby accorded Rule 1.47(a) status

As provided in Rule 1.47(a), this Office will forward notice of this application's filing date to non-signing inventor Zhe Li at his address given in the declaration. Notice of the filing of this application will also be published in the Official Gazette.

This application is being forwarded to Technology Center AU 2768.

Inquiries related to this decision may be addressed to Kien Nguyen at (703) 306-5592 or in his absence, the undersigned at (703) 305-1820.

Brian Hearn
Petitions Examiner
Office of Petitions
Office of the Deputy Commissioner
for Patent Examination Policy

Enclosure: Corrected Filing Receipt

UNITED STATES PATENT AND TRADEMARK OFFICE

Commissioner for Patents
United States Patent and Trademark Office
P.O. Box 1450
Alexandria, VA 22313-1450
www.uspto.gov

SAWYER LAW GROUP LLP
2465 E. BAYSHORE ROAD, SUITE NO. 406
PALO ALTO, CA 94303

COPY MAILED

NOV 1 2 2008

OFFICE OF PETITIONS

In re Patent No. 6,710,358 :
Issue Date: March 23, 2004 :
Application No. 09/513,396 : ON PETITION
Filed: February 25, 2000 :
Attorney Docket No. 4306P :

This is a decision on the petition under 37 CFR 1.378(c), filed April 18, 2008, to accept the delayed payment of a maintenance fee for the above-identified patent.

The petition is **DISMISSED**.

A petition to accept the unintentionally delayed payment of a maintenance fee under 35 U.S.C. 41(c) and 37 CFR 1.378(c) must be accompanied by: (1) a statement that the delay was unintentional; (2) payment of the appropriate maintenance fee, unless previously submitted; (3) payment of the surcharge set forth in 37 CFR 1.20(i)(2). This petition lacks item (2) above.

With respect to item 2: The maintenance fee of $465 is acknowledged as being received in the U.S. Patent and Trademark Office on April 18, 2008, however, this fee is insufficient because petitioner is no longer claiming small entity status. As of October 2, 2008, the current three and one half year maintenance fee is $980. To satisfy the requirement of 37 CFR 1.378(c) the petitioner must submit (1) the maintenance fee balance of $335; and (2) the renewed petition fee of $400. A renewed petition cannot be considered until the outstanding balance of $735 is paid.

Any petition for reconsideration of this decision must be accompanied by the **petition fee of $400** as set forth in 37 CFR 1.17(f). The petition for reconsideration must include the lacking item(s) noted above , since, after a decision on the petition for reconsideration, no further reconsideration or review of the matter will be undertaken by the Director.

If reconsideration of this decision is desired, a petition for reconsideration under 37 CFR 1.378(e) must be filed within **TWO (2) MONTHS** from the mail date of this decision. No extension of this two-month time limit can be granted under 37 CFR 1.136(a) or (b). This is **not** a final agency action within the meaning of 5 U.S.C. § 704.

It is not apparent whether the person signing the statement of unintentional delay was in a position to have firsthand or direct knowledge of the facts and circumstances of the delay at issue. Nevertheless, such statement is being treated as having been made as the result of a

inquiry has not been made, petitioner must make such an inquiry. If such inquiry results in the discovery that the delay in paying the maintenance fee under 37 CFR 1.378(c) was intentional, petitioner must notify the Office.

Further correspondence with respect to this matter should be addressed as follows:

By Mail: Mail Stop PETITION
Commissioner for Patents
Post Office Box 1450
Alexandria, VA 22313-1450

By hand: U. S. Patent and Trademark Office
Customer Service Window, Mail Stop Petitions
Randolph Building
401 Dulany Street
Alexandria, VA 22314

The centralized facsimile number is (571) 273-8300.

Telephone inquiries should be directed to Diane Goodwyn at 571-272-6735.

Thurman Page
Petitions Examiner
Office of Petitions

UNITED STATES PATENT AND TRADEMARK OFFICE

Commissioner for Patents
United States Patent and Trademark Office
P.O. Box 1450
Alexandria, VA 22313-1450
www.uspto.gov

SAWYER LAW GROUP LLP
2465 E. BAYSHORE ROAD, SUITE 406
PALO ALTO, CA 94303

COPY MAILED
FEB 03 2009
OFFICE OF PETITIONS

In re Patent No. 6,710,358
Issue Date: March 23, 2004
Application No. 09/513,396
Filed: February 25, 2000
Attorney Docket No. 4306P

ON PETITION

This is a decision on the renewed petition under 37 CFR 1.378(c), filed November 19, 2008, to accept the unintentionally delayed payment of a maintenance fee for the above-identified patent.

The petition is **GRANTED**.

This patent expired on March 23, 2008 for failure to pay the three and one-half year maintenance fee. Since this petition was submitted within twenty-four months after the six-month grace period provided in 37 CFR 1.362(e), the petition was timely filed under the provisions of 37 CFR 1.378(c).

The maintenance fee is hereby accepted and the above-identified patent is reinstated as of the mail date of this decision.

It is not apparent whether the person signing the statement of unintentional delay was in a position to have firsthand or direct knowledge of the facts and circumstances of the delay at issue. Nevertheless, such statement is being treated as having been made as the result of a reasonable inquiry into the facts and circumstances of such delay. See 37 CFR 10.18(b) and Changes to Patent Practice and Procedure; Final Rule Notice, 62 Fed. Reg. 53131, 53178 (October 10, 1997), 1203 Off. Gaz. Pat. Office 63, 103 (October 21, 1997). In the event that such an inquiry has not been made, petitioner must make such an inquiry. If such inquiry results in the discovery that it is not correct that the entire delay in filing the required reply from the due date for the reply until the filing of a grantable petition pursuant to 37 CFR 1.137(b) was unintentional, petitioner must notify the Office.

Telephone inquiries concerning this decision should be directed to Diane Goodwyn at (571) 272-6735.

Thurman Page
Petitions Examiner
Office of Petitions

UNITED STATES PATENT AND TRADEMARK OFFICE

Commissioner for Patents
United States Patent and Trademark Office
P.O. Box 1450
Alexandria, VA 22313-1450
www.uspto.gov

JHK LAW
P.O. BOX 1078
LA CANADA, CA 91012-1078

COPY MAILED

FEB 23 2005

OFFICE OF PETITIONS

In re Application of	:	
Tai June Yoo	:	
Application No. 09/513,645	:	DECISION GRANTING PETITION
Filed: February 25, 2000	:	UNDER 37 CFR 1.137(b)
Attorney Docket No. 2502-1-1	:	

This is a decision on the petition under 37 CFR 1.137(b), filed September 29, 2004, to revive the above-identified application.

The petition is **GRANTED**.

The petition satisfies the conditions for revival pursuant to the provisions of 37 CFR 1.137(b) in that (1) the reply in the form of an amendment; (2) the petition fee; and (3) the required statement of unintentional delay have been received. Accordingly, the reply to the nonfinal Office action of July 26, 2002 is accepted as having been unintentionally delayed.

Additionally, the power of attorney submitted on September 29, 2004 has been acknowledged.

Telephone inquiries concerning this decision should be directed to the undersigned at (571) 272-3208.

This matter is being referred to Technology Center AU 1632.

Karen Creasy

Karen Creasy
Petitions Examiner
Office of Petitions
Office of the Deputy Commissioner
for Patent Examination Policy

UNITED STATES PATENT AND TRADEMARK OFFICE

COMMISSIONER FOR PATENTS
UNITED STATES PATENT AND TRADEMARK OFFICE
P.O. BOX 1450
ALEXANDRIA, VA 22313-1450
www.uspto.gov

Paper No. 16

Nora M. Tocups
P. O. Box 698
140 Pinecrest Avenue
Decatur, GA 30030

COPY MAILED
MAY 1 4 2004
OFFICE OF PETITIONS

In re Application of	:	
Maria Adamczyk, et al.	:	
Application No. 09/513,679	:	ON PETITION
Filed: February 25, 2000	:	
Attorney Docket No. 99017	:	

This is a decision on the petition under 37 CFR 1.137(b), filed May 3, 2004, to revive the above-identified application.

The petition is **GRANTED**.

Telephone inquiries concerning this decision should be directed to the undersigned at (703) 306-3475.

The application file is being forwarded to Technology Center 2600.

Marianne E. Morgan
Petitions Examiner
Office of Petitions
Office of the Deputy Commissioner
for Patent Examination Policy

UNITED STATES PATENT AND TRADEMARK OFFICE

COMMISSIONER FOR PATENT
UNITED STATES PATENT AND TRADEMARK OFFIC
P.O. BOX 1450
ALEXANDRIA, VA 22313-1450
www.uspto.go

MAIL

Paper No. 15

MAY 1 1 2004

DIRECTOR OFFICE
TECHNOLOGY CENTER 2600

Jeffrey S Whittle
Bracewell & Patterson
711 Louisiana Street
Suite 2900
Houston TX 77002-2781

In re Application of
J. JUDKINS, et al.
Application No. 09/513,784
Filed: February 25, 2000
For: INTEGRATED ACD AND IVR SCRIPTING FOR CALL CENTER TRACKING OF CALLS

DECISION ON PETITION TO WITHDRAW HOLDING OF ABANDONMENT

This is a decision on the Petition to Withdraw Holding of Abandonment based on failure to receive Office Action filed March 8, 2004.

The petition is **DENIED.**

This application became abandoned due to failure to pay the issue fee in response to the Notice of Allowance and Issue Fee Due mailed October 2, 2003. A Notice of Abandonment was mailed on February 23, 2004.

Petitioner has alleged non-receipt of the Notice of Allowance. In the petition, the petitioner has provided an affidavit from Leticia Herrera stating that no Notice of Allowance was received and docketed. In addition, attached to and referenced in the petition is a copy of the docket record where the non-received office communication would have been entered had it been received and docketed. However, the petition lacks a statement from the petitioner attesting to the fact that a search of the file jacket and docket records indicates that the office communication was not received.

The requirements for a successful showing of non-receipt of an Office action in accordance with MPEP § 711.03(c) are: 1.) a statement from the practitioner stating that the office communication was not received by the practitioner; and 2.) attesting to the fact that a search of the file jacket and docket records indicates that the office communication was not received.

Accordingly, the petition does not comply with the requirements of a successful petition to withdraw the holding of abandonment due to non-receipt of an Office action as set forth above.

Petitioner is given **TWO MONTHS** from the date of this decision in which to supplement the petition by including statements from the practitioner as outlined above. The file is being forwarded to the file repository to await a reply from the petitioner.

Kenneth A. Wieder
Special Program Examiner
Technology Center 2600
Communications

UNITED STATES PATENT AND TRADEMARK OFFICE

COMMISSIONER FOR PATENT
UNITED STATES PATENT AND TRADEMARK OFFIC
P.O. BOX 1450
ALEXANDRIA, VA 22313-1450
www.uspto.go

MAIL

JAN 13 2005

DIRECTOR OFFICE
TECHNOLOGY CENTER 2600

Jeffrey S Whittle
Bracewell & Patterson
711 Louisiana Street
Suite 2900
Houston TX 77002-2781

In re Application of
J. JUDKINS, et al.
Application No. 09/513,784
Filed: February 25, 2000
For: INTEGRATED ACD AND IVR SCRIPTING FOR CALL CENTER TRACKING OF CALLS

DECISION ON PETITION TO WITHDRAW HOLDING OF ABANDONMENT

This is a decision on the supplemental Petition to Withdraw Holding of Abandonment based on failure to receive Office Action filed May 24, 2004.

The petition is **GRANTED.**

This application became abandoned due to failure to pay the issue fee in response to the Notice of Allowance and Issue Fee Due mailed October 2, 2003. A Notice of Abandonment was mailed on February 23, 2004.

Petitioner has alleged non-receipt of the Notice of Allowance. In the petition, the petitioner has provided an affidavit from Leticia Herrera stating that no Notice of Allowance was received and docketed. In addition, attached to and referenced in the petition is a copy of the docket record where the non-received office communication would have been entered had it been received and docketed. However, the petition lacks a statement from the petitioner attesting to the fact that a search of the file jacket and docket records indicates that the office communication was not received.

The supplemental petition taken with the original petition filed March 8, 2004 meets the requirements set forth above.

Since it has been established that petitioner failed to receive the Notice of Allowance, it is presumed that the Notice of Allowability was also not received. Accordingly, the Notice of Allowance is vacated. A new Notice of Allowance will be prepared and mailed along with a re-mailing of the Notice of Allowability in due course.

Kenneth A. Wieder
Special Program Examiner
Technology Center 2600
Communications

UNITED STATES PATENT AND TRADEMARK OFFICE

Commissioner for Patents
United States Patent and Trademark Office
P.O. Box 1450
Alexandria, VA 22313-1450
www.uspto.gov

In re Patent No. 6222495
Issue Date: April 24,2001
Application No. 09513787
Filed: February 25,2000
Attorney Docket No. 1823/0F789

:
:DECISION GRANTING PETITION
:UNDER 37 CFR 1.378(c)
:

This is a decision on the electronic petition, filed May 8,2009 ,under 37 CFR 1.378(c) to accept the unintentionally delayed payment of the 7.5 year maintenance fee for the above-identified patent.

The petition is **GRANTED**.

The maintenance fee is accepted, and the above-identified patent reinstated as of May 8,2009 .
This decision also constitutes notice that the fee has been accepted. An electronic copy of the petition and this decision has been created as an entry in the Image File Wrapper. Nevertheless, petitioner should print and retain an independent copy.

Telephone inquiries related to this electronic decision should be directed to the Electronic Business Center at 1-866-217-9197.

PTO/SB/66 (03-09)
Approved for use through 03/31/2012. OMB 0651-0016
U.S. Patent and Trademark Office: U.S. DEPARTMENT OF COMMERCE
Under the Paperwork Reduction Act of 1995, no persons are required to respond to a collection of information unless it displays valid OMB control number.

PETITION TO ACCEPT UNINTENTIONALLY DELAYED PAYMENT OF MAINTENANCE FEE IN AN EXPIRED PATENT (37 CFR 1.378(c))

Patent Number	Issue Date (YYYY-MM-DD)	Application Number	Filing Date (YYYY-MM-DD)	Docket Number (if applicable)
6222495	2001-04-24	09513787	2000-02-25	447363-640005

CAUTION: Maintenance fee (and surcharge, if any) payment must correctly identify: (1) the patent number and (2) the application number of the actual U.S. application leading to issuance of that patent to ensure the fee(s) is/are associated with the correct patent. 37 CFR 1.366(c) and (d).

SMALL ENTITY
☒ Patentee claims, or has previously claimed, small entity status. See 37 CFR 1.27.

LOSS OF ENTITLEMENT TO SMALL ENTITY STATUS
☐ Patentee is no longer entitled to small entity status. See 37 CFR 1.27(g)

NOT Small Entity		Small Entity	
Fee	Code	Fee	Code
○ 3 ½ year	(1551)	○ 3 ½ year	(2551)
○ 7 ½ year	(1552)	◉ 7 ½ year	(2552)
○ 11 ½ year	(1553)	○ 11 ½ year	(2553)

SURCHARGE
The surcharge required by 37 CFR 1.20(i)(2) (Fee Code 1558) must be paid as a condition of accepting unintentionally delayed payment of the maintenance fee.

MAINTENANCE FEE (37 CFR 1.20(e)-(g))
The appropriate maintenance fee must be submitted with this petition.

STATEMENT
THE UNDERSIGNED CERTIFIES THAT THE DELAY IN PAYMENT OF THE MAINTENANCE FEE TO THIS PATENT WAS UNINTENTIONAL

PETITIONER(S) REQUEST THAT THE DELAYED PAYMENT OF THE MAINTENANCE FEE BE ACCEPTED AND THE PATENT REINSTATED

THIS PORTION MUST BE COMPLETED BY THE SIGNATORY OR SIGNATORIES

37 CFR 1.378(d) states: "Any petition under this section must be signed by an attorney or agent registered to practice before the Patent and Trademark Office, or by the patentee, the assignee, or other party in interest."

I certify, in accordance with 37 CFR 1.4(d)(4) that I am

◉ An attorney or agent registered to practice before the Patent and Trademark Office

○ A sole patentee

○ A joint patentee; I certify that I am authorized to sign this submission on behalf of all the other patentees.

○ A joint patentee; all of whom are signing this e-petition

○ The assignee of record of the entire interest

Patent Practitioner			
A signature of the applicant or representative is required in accordance with 37 CFR 1.33 and 10.18. Please see 37 CFR 1.4(d) for the form of the signature			
Signature	/Nathan T. Lewis/	Date (YYYY-MM-DD)	2009-05-08
Name	Nathan T. Lewis	Registration Number	56218

This collection of information is required by 37 CFR 1.378(c). The information is required to obtain or retain a benefit by the public which is to file (and by the USPTO to process) an application. Confidentiality is governed by 35 U.S.C. 122 and 37 CFR 1.11 and 1.14. This collection is estimated to take 1 hour to complete, including gathering, preparing, and submitting the completed application form to the USPTO. Time will vary depending upon the individual case. Any comments on the amount of time you require to complete this form and/ or suggestions for reducing this burden, should be sent to the Chief Information Officer, U.S. Patent and Trademark Office, U.S. Department of Commerce, P.O. Box 1450, Alexandria, VA 22313-1450. DO NOT SEND FEES OR COMPLETED FORMS TO THIS ADDRESS. **This form can only be used when in conjunction with EFS-Web. If this form is mailed to the USPTO, it may cause delays in reinstating the patent.**

Privacy Act Statement

The Privacy Act of 1974 (P.L. 93-579) requires that you be given certain information in connection with your submission of the attached form related to a patent application or patent. Accordingly, pursuant to the requirements of the Act, please be advised that: (1) the general authority for the collection of this information is 35 U.S.C. 2(b)(2); (2) furnishing of the information solicited is voluntary; and (3) the principal purpose for which the information is used by the U.S. Patent and Trademark Office is to process and/or examine your submission related to a patent application or patent. If you do not furnish the requested information, the U.S. Patent and Trademark Office may not be able to process and/or examine your submission, which may result in termination of proceedings or abandonment of the application or expiration of the patent.

The information provided by you in this form will be subject to the following routine uses:

1. The information on this form will be treated confidentially to the extent allowed under the Freedom of Information Act (5 U.S.C. 552) and the Privacy Act (5 U.S.C. 552a). Records from this system of records may be disclosed to the Department of Justice to determine whether the Freedom of Information Act requires disclosure of these records.

2. A record from this system of records may be disclosed, as a routine use, in the course of presenting evidence to a court, magistrate, or administrative tribunal, including disclosures to opposing counsel in the course of settlement negotiations.

3. A record in this system of records may be disclosed, as a routine use, to a Member of Congress submitting a request involving an individual, to whom the record pertains, when the individual has requested assistance from the Member with respect to the subject matter of the record.

4. A record in this system of records may be disclosed, as a routine use, to a contractor of the Agency having need for the information in order to perform a contract. Recipients of information shall be required to comply with the requirements of the Privacy Act of 1974, as amended, pursuant to 5 U.S.C. 552a(m).

5. A record related to an International Application filed under the Patent Cooperation Treaty in this system of records may be disclosed, as a routine use, to the International Bureau of the World Intellectual Property Organization, pursuant to the Patent Cooperation Treaty.

6. A record in this system of records may be disclosed, as a routine use, to another federal agency for purposes of National Security review (35 U.S.C. 181) and for review pursuant to the Atomic Energy Act (42 U.S.C. 218(c)).

7. A record from this system of records may be disclosed, as a routine use, to the Administrator, General Services, or his/her designee, during an inspection of records conducted by GSA as part of that agency's responsibility to recommend improvements in records management practices and programs, under authority of 44 U.S.C. 2904 and 2906. Such disclosure shall be made in accordance with the GSA regulations governing inspection of records for this purpose, and any other relevant (i.e., GSA or Commerce) directive. Such disclosure shall not be used to make determinations about individuals.

8. A record from this system of records may be disclosed, as a routine use, to the public after either publication of the application pursuant to 35 U.S.C. 122(b) or issuance of a patent pursuant to 35 U.S.C. 151. Further, a record may be disclosed, subject to the limitations of 37 CFR 1.14, as a routine use, to the public if the record was filed in an application which became abandoned or in which the proceedings were terminated and which application is referenced by either a published application, an application open to public inspections or an issued patent.

9. A record from this system of records may be disclosed, as a routine use, to a Federal, State, or local law enforcement agency, if the USPTO becomes aware of a violation or potential violation of law or regulation.

UNITED STATES PATENT AND TRADEMARK OFFICE

COMMISSIONER FOR PATENTS
UNITED STATES PATENT AND TRADEMARK OFFICE
P.O. BOX 1450
ALEXANDRIA, VA 22313-1450
WWW.USPTO.GOV

Paper No. 11

NEIFELD IP LAW PC
CRYSTAL PLAZA 1, SUITE 1001
2001 JEFFERSON DAVIS HIGHWAY
ARLINGTON, VA 22202

COPY MAILED

SEP 16 2003

OFFICE OF PETITIONS

In re Application of	:	
Joel Frederic Plotkin	:	
Application No. 09/513,960	:	NOTICE
Filed: February 28, 2000	:	
Attorney Docket No. EJOU0010U/US	:	

This is a notice regarding your request for acceptance of a fee deficiency submission under 37 CFR 1.28. On September 1, 1998, the Court of Appeals for the Federal Circuit held that 37 CFR 1.28(c) is the sole provision governing the time for correction of the erroneous payment of the issue fee as a small entity. **See DH Technology v. Synergystex International, Inc. 154 F.3d 1333, 47 USPQ2d 1865 (Fed. Cir. Sept. 1, 1998).**

The Office no longer investigates or rejects original or reissue applications under 37 CFR 1.56. **1098 Off. Gaz. Pat. Office 502 (January 3, 1989)**. Therefore, nothing in this Notice is intended to imply that an investigation was done.

Your fee deficiency submission under 37 CFR 1.28 is hereby **ACCEPTED**.

Inquiries related to this communication should be directed to the Office of Petitions Staff at (703) 305-9285.

This file is being forwarded to Technology Center AU 3629.

Wan Laymon
Petitions Examiner
Office of Petitions
Office of the Deputy Commissioner
for Patent Examination Policy

UNITED STATES PATENT AND TRADEMARK OFFICE

COMMISSIONER FOR PATENTS
UNITED STATES PATENT AND TRADEMARK OFFICE
P.O. BOX 1450
ALEXANDRIA, VA 22313-1450
www.uspto.gov

Neifeld IP Law, PC
2001 Jefferson Davis
Arlington, VA 22202

MAILED

SEP 28 2004

DIRECTOR'S OFFICE
TECHNOLOGY CENTER 3600

Paper No. 15

In re Application of Joel F. Plotkin Application No. 09/513,960 Filed: February 28, 2000 Attorney Docket No.: EJOU0010U/US For: PROCESS FOR COMPUTER IMPLEMENTED MANUSCRIPT REVIEW	: : : : : : :	DECISION ON PETITION REGARDING REFUSAL TO ADMIT AMENDEMNT UNDER *37 CFR 1.181*

Applicant's petition under 37 C.F.R. 1.181 filed February 10, 2004 in application Serial No. 09/513,960, requests to reinstate the amendment filed on August 22, 2003.

The petition is **GRANTED.**

A petition under 37 CFR 1.181 must include: (1) a statement of facts involved and (2) the point or points to be reviewed and the action requested. There is no fee required for a 1.181 petition.

The petition filed on February 10, 2004, included both elements (1) and (2) above. The applicant also filed a revised appeal brief in response to the notice of defective brief mailed on January 13, 2004. The amendment filed on August 22, 2003 under 37 CFR 1.111 was in response to a second non-final office action mailed on May 7, 2003. Since the amendment filed on August 22, 2003 was timely filed in response to a non-final office action it should have been entered as a matter of right under 37 CFR 1.111. Therefore, the notice of defective appeal brief mailed on January 13, 2004 indicating that appellant's appeal brief is defective because it included amended versions of claims, which were not previously entered, was in error and is hereby withdrawn.

The application has been forwarded to the Examiner to consider the amendment and appeal brief filed on August 22, 2003.

Any questions concerning his decision should be directed to Supervisory Patent Examiner John Weiss at (703) 308-2702

SUMMARY: The petition is **GRANTED.**

John Love, Director
Patent Technology Center 3600
Telephone: (703) 308-1020

SNM/jgw: 7/26/04

SM

UNITED STATES PATENT AND TRADEMARK OFFICE

Commissioner for Patents
United States Patent and Trademark Office
P.O. Box 1450
Alexandria, VA 22313-1450
www.uspto.gov

MAILED
FROM DIRECTORS OFFICE

JUN 27 2005

TECHNOLOGY CENTER 3600

Neifeld IP Law, PC
4813-B Eisenhower Avenue
Alexandria, VA 22304

In re Application of
Joel F. Plotkin
Application No. 09/513,960
Filed: February 28, 2000
Attorney Docket No.: EJOU0010U/US
For: PROCESS FOR COMPUTER IMPLEMENTED MANUSCRIPT REVIEW

DECISION ON PETITION REQUESTING DIRECTOR TO VACATE OFFICE ACTION

Applicant's petition under 37 C.F.R. 1.181 filed February 08, 2005 requests to have the final Office action mailed on December 16, 2004 vacated and have the examiner respond to the appeal brief filed August 22, 2003.

The petition is **DENIED.**

A petition under 37 CFR 1.181 must include: (1) a statement of facts involved and (2) the point or points to be reviewed and the action requested. There is no fee required for a 1.181 petition.

The petition filed on February 08, 2005, included both elements (1) and (2) above.

The file history indicates the following.

1. Second non-final Office action was mailed on May 07, 2003.

2. Applicant filed an amendment and appeal brief on August 22, 2003 in response to the second Office action.

3. Examiner mailed a final Office action on December 16, 2004. The final Office action included a new 35 USC 101 rejection and a new 35 USC 103 rejection. The new rejections were required because of the amendments to the claims filed on August 22, 2003.

4. Applicant filed a notice of appeal on March 15, 2005 and appeal brief on May 16, 2005.

Therefore, the appeal brief filed on August 22, 2003 is moot and cannot be responded to because the appeal brief fails to address the current rejections of record.

The application will be forwarded to the examiner to respond to the appeal brief filed on May 16, 2005.

Any questions concerning his decision should be directed to Supervisory Patent Examiner John Weiss at (571) 272-6812.

SUMMARY: The petition is **DENIED.**

John Love, Director
Patent Technology Center 3600
Telephone: (571) 272-5250

jgw: 6/13/05

UNITED STATES PATENT AND TRADEMARK OFFICE

COMMISSIONER FOR PATENTS
UNITED STATES PATENT AND TRADEMARK OFFICE
P.O. BOX 1450
ALEXANDRIA, VA 22313-1450
www.uspto.gov

S H Dworetsky
AT&T Corporation
P O Box 4110
Middletown, NJ 07748-4110

MAIL

SEP 2 1 2005

DIRECTOR OFFICE
TECHNOLOGY CENTER 2100

In re Application of: AFSHAR, et al.
Application No. 09/514,149
Attorney Docket No. IDS-1999-0710
Filed: 28 February 2000
For: PARADIGM IN MULTIMEDIA SERVICES CREATION METHODOLOGY, AND NEW SERVICE CREATION AND SERVICE EXECUTION ENVIRONMENTS

DECISION ON PETITION TO WITHDRAW HOLDING OF ABANDONMENT UNDER 37 CFR §1.181

This is a decision on the petition, filed 04 November 2004, requesting the Withdrawal of the Holding of Abandonment of the above-identified application, which has been treated as a petition under 37 CFR §1.181. Applicant's status inquiry of 17 February 2005 is hereby responsively answered, too.

The Petition is **DISMISSED.**

The application was abandoned for failure to file a timely response to the Office action mailed on 29 January 2003. Notice of Abandonment was mailed 29 January 2004.

37 C.F.R. § 1.8(b) states:

(b) In the event that correspondence is considered timely filed by being mailed or transmitted in accordance with paragraph (a) of this section, but not received in the Patent and Trademark Office, and the application is held to be abandoned or the proceeding is dismissed, terminated, or decided with prejudice, the correspondence will be considered timely if the party who forwarded such correspondence:

(1) Informs the Office of the previous mailing or transmission of the correspondence promptly after becoming aware that the Office has no evidence of receipt of the correspondence;

(2) Supplies an additional copy of the previously mailed or transmitted correspondence and certificate; and

(3) Includes a statement which attests on a personal knowledge basis or to the satisfaction of the Director to the previous timely mailing or transmission.

If the correspondence was sent by facsimile transmission, a copy of the sending unit's report confirming transmission may be used to support this statement.

In support of the petition, Petitioner has provided a copy of the facsimile response that was submitted 29 April 2003, a Certificate of Transmission certifying that the Amendment was transmitted on 29 April 2003, and a copy of an the sending facsimile-unit's transmission report confirming transmission of nine pages to the Patent and Trademark Office on 29 April 2003.

Petitioner has not completely satisfied the criteria to show that the requisite response was timely filed as set forth supa. The petition needs to include an additional personal statement by the individual sending the original transmission. While the third condition of 37 CFR § 1.8(b) permits submission of the sending unit's transmission report to support such a statement, it is not intended to be a substitute for such a statement. To sufficiently make the case, the petition must contain evidence from the personal knowledge of the party sending the requisite correspondence. In this case, it appears that on 29 April 2003, a Mr. Benjamin S. Lee submitted the original reply. Any statement from Mr. Lee should focus on his personal knowledge regarding the timeliness of the transmission itself.

Applicant can avoid future problems relating to use of the facsimile for official submissions by modifying in-house procedures and following up transmissions with a query to the Office if an "Auto-Reply" is not received.

The petition is **DISMISSED**.

If the petitioner desires further review of this decision, petitioner should file a Request for Reconsideration within two (2) months of the mailing date of this decision. Telephone inquiries should be directed to the undersigned at 703-308-0269.

Brian L. Johnson
Special Programs Examiner
Technology Center 2100
Computer Architecture, Software, and Information Security
571-272-3595

GO

UNITED STATES PATENT AND TRADEMARK OFFICE

COMMISSIONER FOR PATENTS
UNITED STATES PATENT AND TRADEMARK OFFICE
P.O. BOX 1450
ALEXANDRIA, VA 22313-1450
www.uspto.gov

Mr. S. H. Dworetsky
AT & T Corporation
Room 2A207
One AT&T Way
Bedminster, NJ 07921

MAILED

JUN 0 8 2006

TECHNOLOGY CENTER 2100

In re Application of: Afshar, et al.)
Application No.: 09/514,149)
Filed: February 28, 2000) **DECISION ON PETITION TO**
Attorney Docket No.: IDS-1999-0710) **ACCEPT CORRESPONDENCE AS**
For: PARADIGM IN MULTIMEDIA) **TIMELY FILED UNDER 37 CFR §1.8**
SERVICES CREATION METHODOLOGY,)
AND NEW SERVICE CREATION AND)
SERVICE EXECUTION ENVIRONMENTS

This is a decision on the Request for Reconsideration of the decision on petition to withdraw the holding of abandonment, filed November 18, 2005. The instant petition is being reconsidered under 37 CFR § 1.8(b) as requesting the acceptance of correspondence as timely filed. The original petition was filed on November 4, 2004 and dismissed in a decision mailed September 21, 2005.

The petition is **DENIED**.

In support of the original petition, Petitioner provided: a copy of the facsimile response indicated to have been filed on April 29, 2003; certificate of transmission certifying that the amendment was transmitted on April 29, 2003, a copy of the SENDING facsimile unit's transmission report confirming that nine pages were sent via facsimile transmission on April 29, 2003. The Request for Reconsideration of the decision on petition (the instant petition) included the text of the original petition and further arguments.

REQUIREMENTS

In considering petitioners' submission under 37 CFR § 1.8(b), the correspondence can be considered timely filed if petitioners meet at least three conditions:

1. Informs the Office of the previous mailing or transmission of the correspondence promptly after becoming aware that the Office has no evidence of receipt of the correspondence;
2. Supplies an additional copy of the previously mailed or transmitted correspondence and certificate; and
3. **Includes a statement that attests on a personal knowledge basis or to the satisfaction of the Commissioner to the previous timely mailing or transmission.** If the correspondence was sent by facsimile transmission, a copy of the sending unit's report confirming transmission may be used **to support this statement**.
   [Emphasis added.]

RELIEF REQUESTED

The instant petition requests reconsideration and relief under the standard that the evidence provided attests "to the satisfaction of the Commissioner", as stated in third requirement identified above. In addition, Petitioner argues that the facsimile transmission report (from the sending unit) is not submitted as a substitute for the personal statement, but instead is submitted to support the statement of timely transmission.

ANALYSIS

Initially, and in response to Petitioner's argument, it is noted that in accordance with rule 1.8(b), the "**statement**" referenced in both sentences of the third requirement (reproduced above) is in fact the "personal knowledge **statement**" and not merely a "statement of timely transmission". Thus, the submission of a copy of the sending unit's report, as identified (above) in the rule, is used as evidence to support the "personal knowledge statement", normally also provided.

The instant petition fails to provide a personal knowledge statement by the individual sending the original transmission. While the third condition of 37 CFR § 1.8(b) permits submission of the sending unit's transmission report **to support the personal knowledge statement**, it is not intended to be a substitute for such a statement.

Irregardless, and in consideration of the evidence provided to meet the standard of "to the satisfaction of the Commissioner", a review of the evidence provided shows that the transmission status report provided by Petitioner omits the actual telephone number used in the transmission from the sending unit. As such, Petitioner has failed to provide sufficient evidence as to the timely transmission of the response to the appropriate facsimile number within the USPTO. The presumption that the response was timely and properly transmitted has not been met, therefore, the submission fails to meet the standard "to satisfaction of the Commissioner", as provided.

It is suggested the practitioner can avoid future problems relating to use of facsimile for official submissions by modifying in-house procedures and following up transmissions with a query to the Office if a facsimile "Auto-Reply" receipt is not received. A facsimile "Auto-Reply" receipt may be used as *prima facia* evidence of timely submission "to the satisfaction of the Commissioner".

Accordingly, the petition is **DENIED**.

The holding of abandonment is maintained as proper. The petitioner may wish to consider filing a petition to revive the application under 37 CFR § 1.137. Telephone inquiries should be directed to the undersigned at 571-272-3595.

James Dwyer,
Director
Technology Center 2100
Computer Architecture, Software, and Information Security

UNITED STATES PATENT AND TRADEMARK OFFICE

Commissioner for Patents
United States Patent and Trademark Office
P.O. Box 1450
Alexandria, VA 22313-1450
www.uspto.gov

MR. S.H. DWORETSKY
AT&T CORPORATION
ONE AT&T WAY
ROOM 2A-207
BEDMINSTER, NJ 07921

COPY MAILED

JAN 17 2007

OFFICE OF PETITIONS

In re Application of	:	
Siroos K. Afshar et al	:	
Application No. 09/514,149	:	ON PETITION
Filed: February 28, 2000	:	
Attorney Docket No. IDS-1999-0710	:	

This is a decision on the petition under 37 CFR 1.137(b), filed July 27, 2006, to revive the above-identified application.

The petition is **GRANTED**.

The above-identified application became abandoned for failure to reply in a timely manner to the non-final Office action mailed January 29, 2003, which set a shortened statutory period for reply of three (3) months. No extensions of time under the provisions of 37 CFR 1.136(a) were obtained. Accordingly, the above-identified application became abandoned on April 30, 2003.

Telephone inquiries concerning this decision should be directed to Irvin Dingle at (571) 272-3210.

This matter is being forwarded to Technology Center AU 2126 for further processing.

Irvin Dingle
Petitions Examiner
Office of Petitions

UNITED STATES PATENT AND TRADEMARK OFFICE

Commissioner for Patents
United States Patent and Trademark Office
P.O. Box 1450
Alexandria, VA 22313-1450
www.uspto.gov

MR. S. H. DWORETSKY
AT & T CORPORATION
ONE AT & T WAY
ROOM 2A-207
BEDMINSTER, NJ 07921

COPY MAILED

NOV 06 2008

OFFICE OF PETITIONS

In re Application of :
Siroos K. Afshar et al :
Application No. 09/514,149 :
Filed: February 28, 2000 :
Attorney Docket No. IDS-1999-0710 :

ON PETITION

This is a decision on the petition filed July 28, 2008 under 37 CFR 1.137(b), to revive the above-identified application.

The petition is **GRANTED.**

Telephone inquiries concerning this decision should be directed to the undersigned at (571) 272-3210.

This matter is being referred to the Office of Data Management for further processing.

Irvin Dingle
Petitions Examiner
Office of Petitions

UNITED STATES
PATENT AND
TRADEMARK OFFICE

UNDER SECRETARY OF COMMERCE FOR INTELLECTUAL PROPERTY
AND DIRECTOR OF THE UNITED STATES PATENT AND TRADEMARK OFFICE
PO BOX 1450, ALEXANDRIA, VA 22313-1450
WWW.USPTO.GOV

JUL 18 2003

FOLEY AND LARDNER
SUITE 500
3000 K STREET NW
WASHINGTON DC 20007

#08

In re Application of	:
Andre Jestin et al	:
Serial No.: 09/514,245	: PETITION DECISION
Filed: February 28, 2000	:
Attorney Docket No.: 065691-0176	:

This is in response to the Petition under 37 CFR 1.59, filed June 4, 2003, to expunge proprietary material submitted by applicants.

Applicants state that on June 4, 2003, RCE papers were filed accompanied by an Information Disclosure Statement containing proprietary information. Applicants request return of the documents if they are not found to be material to patentability of the application. The examiner has reviewed the documents and found them not to affect the patentability of the claims and is preparing to allow the application thereover.

Applicants' petition is **GRANTED**.

The application will be forwarded to the examiner for further consideration.

The Information Disclosure Statement documents are returned with this decision.

Should there be any questions with respect to this decision, please contact William R. Dixon, Jr., by mail addressed to: Director, Technology Center 1600, PO BOX 1450, ALEXANDRIA, VA 22313-1450, or by telephone at (703)308-3824 or by facsimile transmission at (703) 308-7230

for Jasemine C. Chambers
Director, Technology Center 1600

UNITED STATES PATENT AND TRADEMARK OFFICE

COMMISSIONER FOR PATENTS
UNITED STATES PATENT AND TRADEMARK OFFICE
WASHINGTON, D.C. 20231
www.uspto.gov

Paper No. 14

COPY MAILED

JAN 1 5 2002

OFFICE OF PETITIONS

Venables
P O Box 34385
Washington DC 20043-9998

In re Application of	:	
Kasai, et al.	:	
Application No. 09/514,312	:	DECISION ON PETITION
Filed: February 28, 2000	:	
Attorney Docket No. 31671-157328RK	:	

This is a decision on the petition under 37 CFR 1.137(b), filed January 2, 2002, to revive the above-identified application.

The petition is **GRANTED**.

The above-cited application became abandoned for failure to reply in a timely manner to the final Office action mailed March 22, 2001, which set a shortened statutory period for reply of three (3) months. On September 21, 2001, petitioner filed a Request for Continued Examination ("RCE") along with a request for an extension of time within the third month. On October 25, 2001, a notice was mailed to petitioner indicating that the RCE was improper and would not be entered because no amendment was filed with the RCE. No further responses were received within the allowable period. Accordingly, the application became abandoned on September 23, 2001. A Notice of Abandonment was mailed on November 5, 2001.

The RCE, first filed September 21, 2001, is accepted as the reply in conjunction with the preliminary amendment filed January 2, 2002.

The application is being forwarded to Technology Center 1600 for further processing.

Telephone inquiries concerning this decision should be directed to the undersigned, at (703) 305-0010.

Kenya A. McLaughlin

Kenya A. McLaughlin
Petitions Attorney
Office of Petitions
Office of the Deputy Commissioner
for Patent Examination Policy

UNITED STATES PATENT AND TRADEMARK OFFICE

COMMISSIONER FOR PATENTS
UNITED STATES PATENT AND TRADEMARK OFFICE
WASHINGTON, D.C. 20231
www.uspto.gov

Paper No. 7

COPY MAILED

SEP 01 2000

SPECIAL PROGRAMS OFFICE
DAC FOR PATENTS

GORDON T ARNOLD
ARNOLD & ASSOCIATES
2603 AUGUSTA SUITE 800
HOUSTON, TX 77057

In re Application of :
Michael John Bryant et al. :
Application No. 09/514,423 : DECISION ACCORDING
Filed: February 28, 2000 : STATUS UNDER 37 CFR 1.47(a)
For: ELECTRICAL CABLE INSERT :

This is in response to the "Petition Under 37 CFR 1.47(a)," filed May 22, 2000.

The petition is granted.

Petitioner has shown that the non-signing inventor has refused to join in the filing of the above-identified application.

The above-identified application and papers have been reviewed and found in compliance with 37 CFR 1.47(a). This application is hereby accorded Rule 1.47(a) status. As provided in Rule 1.47(a), this Office will forward notice of this application's filing to the non-signing inventor at the address given in the Declaration. Notice of the filing of this application will also be published in the Official Gazette.

Telephone inquiries regarding this decision should be directed to Petitions Examiner Wan Laymon at (703) 306-5685.

This application is being forwarded to Technology Center AU 2831 for examination in due course.

Frances Hicks

Frances Hicks
Lead Petitions Examiner
Office of Petitions
Office of the Deputy Commissioner
for Patent Examination Policy

UNITED STATES PATENT AND TRADEMARK OFFICE

COMMISSIONER FOR PATENTS
UNITED STATES PATENT AND TRADEMARK OFFICE
WASHINGTON, D.C. 20231
www.uspto.gov

Paper No. 8

MICHAEL JOHN BRYANT
18210 MANCE COURT
HOUSTON, TX 77094

COPY MAILED

SEP 0 1 2000

SPECIAL PROGRAMS OFFICE
DAC FOR PATENTS

In re Application of
Bryant and George
Application No. 09/514,423
Filed: February 28, 2000
For: ELECTRICAL CABLE INSERT

Dear Mr. Bryant:

You are named as a joint inventor in the above identified United States patent application, filed under the provisions of 35 U.S.C. 116 (United States Code), and 37 CFR 1.47(a), Rules of Practice in Patent Cases. Should a patent be granted on the application you will be designated therein as a joint inventor.

As a named inventor you are entitled to inspect any paper in the file wrapper of the application, order copies of all or any part thereof (at a prepaid cost per 37 CFR 1.19) or make your position of record in the application. Alternatively, you may arrange to do any of the preceding through a registered patent attorney or agent presenting written authorization from you. If you care to join the application, counsel of record (see below) would presumably assist you. Joining in the application would entail the filing of an appropriate oath or declaration by you pursuant to 37 CFR 1.63.

Telephone inquiries regarding this communication should be directed to Wan Laymon at (703) 306-5685. Requests for information regarding your application should be directed to the File Information Unit at (703) 308-2733. Information regarding how to pay for and order a copy of the application, or a specific paper in the application, should be directed to Certification Division at (703) 308-9726 or 1 (800) 972-6382 (outside the Washington D.C. area).

Frances Hicks

Frances Hicks
Lead Petitions Examiner
Office of Petitions
Office of the Deputy Commissioner
for Patent Examination Policy

cc:
GORDON T. ARNOLD
2603 AUGUSTA SUITE 800
HOUSTON, TX 77057

UNITED STATES PATENT AND TRADEMARK OFFICE

COMMISSIONER FOR PATENTS
UNITED STATES PATENT AND TRADEMARK OFFICE
WASHINGTON, D.C. 20231
www.uspto.gov

COPY MAILED

Paper No. 8

JAN 23 2001

OFFICE OF PETITIONS
A/C PATENTS

Gordon T. Arnold
Arnold & Associates
2603 Augusta Suite 800
Houston, TX 77057

In re Application of
Michael John Bryant and Nick C. George
Application No. 09/514,423
Filed: February 28, 2000
Title of Invention: ELECTRICAL CABLE INSERT

DECISION GRANTING STATUS UNDER 37 CFR 1.47(a)

This is a decision on the Petition under 37 CFR 1.47(a), filed May 22, 2000 (certificate of mailing dated February 28, 2000), to proceed with the above-identified patent application where a joint inventor refuses to join the application.

The Petition is **granted.**

The above-identified application and papers have been reviewed and found in compliance with 37 CFR 1.47(a). This application is hereby accorded Rule 47(a) status[1].

Petitioner has shown that the non-signing inventor refuses to sign the declaration after having been presented with the above-identified application and declaration. Specifically, Petitioner established that the non-signing inventor, Mr. Michael John Bryant, refuses to sign the declaration after having been presented with the application, including the drawings, declaration and appointment of attorney, and assignment documents in the above-identified application.

As provided in Rule 1.47(a), this Office will forward notice of this application's filing to the non-signing inventor at the address given in the Petition. Notice of the filing of this application will also be published in the Official Gazette.

The application file is being forwarded to Technology Center 2800 for further processing.

Telephone inquiries regarding this communication should be directed to Petitions Attorney Derek L. Woods at (703) 305-0014.

For

Beverly M. Flanagan
Supervisory Petitions Examiner
Office of Petitions
Office of the Deputy Commissioner
for Patent Examination Policy

[1] This Office notes that a grantable petition under 37 CFR 1.47(a) requires an affidavit setting forth facts to support the Petition. However, as Petitioner is a registered practitioner, and in accordance with 37 CFR 10.18, the Petition, which asserts facts sufficient to support the granting of this Petition, is accepted in lieu of a Declaration.

UNITED STATES PATENT AND TRADEMARK OFFICE

COMMISSIONER FOR PATENTS
UNITED STATES PATENT AND TRADEMARK OFFICE
WASHINGTON, D.C. 20231
www.uspto.gov

Michael John Bryant
18210 Mance Court
Houston, TX 77094

LETTER

In re Application of
Meisburger, et al.
Application No. 09/514,423
Filed: February 10, 2000
Title of Invention: INSPECTING OPTICAL MASKS WITH ELECTRON BEAM MICROSCOPY

COPY MAILED

JAN 23 2001

OFFICE OF PETITIONS
A/C PATENTS

Dear Mr. Bryant:

You are named as a joint inventor in the above-identified United States patent application filed under the provisions of 35 U.S.C. 116 (United States Code) and 37 CFR 1.47(a), Rules of Practice in Patent Cases. Should a patent be granted on the application you will be designated therein as a joint inventor.

As a named inventor you are entitled to inspect any paper in the file wrapper of the application, order copies of all or any part thereof (at a prepaid cost per 37 CFR 1.19) or make your position of record in the application. Alternatively, you may arrange to do any of the preceding through a registered patent attorney or agent presenting written authorization from you. If you care to join the application, counsel of record (see below) would presumably assist you. Joining in the application would entail the filing of an appropriate oath or declaration by you pursuant to 37 CFR 1.63.

Telephone inquiries regarding this communication should be directed to Petitions Attorney Derek L. Woods at (703) 305-0014. Requests for information regarding your application should be directed to the File Information Unit at (703) 308-2733. Information regarding how to pay for and order a copy of the application, or a specific paper in the application, should be directed to Certification Division at (703) 308-9726 or 1-800-972-6382 (outside the Washington D.C. area).

for

Beverly M. Flanagan
Supervisory Petitions Examiner
Office of Petitions
Office of the Deputy Commissioner
for Patent Examination Policy

Gordon T. Arnold
Arnold & Associates
2603 Augusta, Suite 800
Houston, TX 77057

UNITED STATES PATENT AND TRADEMARK OFFICE

OIPE APR 16 2002 PATENT & TRADEMARK OFFICE

P30213US

COMMISSIONER FOR PATENTS
UNITED STATES PATENT AND TRADEMARK OFFICE
WASHINGTON, D.C. 20231
www.uspto.gov

COPY MAILED

Paper No. 8

JAN 23 2001

OFFICE OF PETITIONS
A/C PATENTS

Gordon T. Arnold
Arnold & Associates
2603 Augusta Suite 800
Houston, TX 77057

In re Application of
Michael John Bryant and Nick C. George
Application No. 09/514,423
Filed: February 28, 2000
Title of Invention: ELECTRICAL CABLE INSERT

DECISION GRANTING STATUS UNDER 37 CFR 1.47(a)

RECEIVED APR 19 2002 TECHNOLOGY CENTER 2800

This is a decision on the Petition under 37 CFR 1.47(a), filed May 22, 2000 (certificate of mailing dated February 28, 2000), to proceed with the above-identified patent application where a joint inventor refuses to join the application.

The Petition is **granted**.

The above-identified application and papers have been reviewed and found in compliance with 37 CFR 1.47(a). This application is hereby accorded Rule 47(a) status[1].

Petitioner has shown that the non-signing inventor refuses to sign the declaration after having been presented with the above-identified application and declaration. Specifically, Petitioner established that the non-signing inventor, Mr. Michael John Bryant, refuses to sign the declaration after having been presented with the application, including the drawings, declaration and appointment of attorney, and assignment documents in the above-identified application.

As provided in Rule 1.47(a), this Office will forward notice of this application's filing to the non-signing inventor at the address given in the Petition. Notice of the filing of this application will also be published in the Official Gazette.

The application file is being forwarded to Technology Center 2800 for further processing.

Telephone inquiries regarding this communication should be directed to Petitions Attorney Derek L. Woods at (703) 305-0014.

For

Beverly M. Flanagan
Supervisory Petitions Examiner
Office of Petitions
Office of the Deputy Commissioner
for Patent Examination Policy

RECEIVED
JAN 29 2001
BY:

[1] This Office notes that a grantable petition under 37 CFR 1.47(a) requires an affidavit setting forth facts to support the Petition. However, as Petitioner is a r gistered practitioner, and in accordance with 37 CFR 10.18, the Petition, which asserts facts sufficient to support the granting of this Petition, is accepted in lieu of a Declaration.

UNITED STATES PATENT AND TRADEMARK OFFICE

Commissioner for Patents
United States Patent and Trademark Office
P.O. Box 1450
Alexandria, VA 22313-1450
www.uspto.gov

MAILED

FEB 19 2010

OFFICE OF PETITIONS

EDWARDS LIFESCIENCES CORPORATION
LEGAL DEPARTMENT
ONE EDWARDS WAY
IRVINE CA 92614

In re Patent No. 6,582,462	:	
Issue Date: June 24, 2003	:	
Application No. 09/514,426	:	ON PETITION
Filed: February 28, 2000	:	
Attorney Docket No. 14635-007890US	:	

This is a decision on the petition under 37 CFR 1.182, filed December 10, 2009, requesting issuance of a duplicate Letters Patent for the above-identified patent.

The petition is **GRANTED**.

The Office of Data Management is directed to issue a duplicate Letters Patent.

Telephone inquiries concerning this decision may be directed to Kimberly Inabinet at (571) 272-4618. Inquiries regarding the issuance of a duplicate Letters Patent may be directed to the Office of Data Management at (703) 308-9250.

A copy of this decision is being forwarded to the Publishing Division for issuance of duplicate Letters Patent.

Carl Friedman
Petitions Examiner
Office of Petitions

cc: Niomi Farmer, RSQ, (Fax – (571) 270-9753))

UNITED STATES DEPARTMENT OF COMMERCE
Patent and Trademark Office
ASSISTANT SECRETARY AND COMMISSIONER
OF PATENTS AND TRADEMARKS
Washington, D.C. 20231

Paul E. Schaafsma
GARDNER, CARTON & DOUGLAS
321 North Clark Street
Suite 3400
Chicago, IL 60610

(For Patent Owner)

#33
ms

Trace Research & Development Center
5901 Research Park Blvd.
Madison, WI 53719

(For Requester)

MAIL
JUL 19 2000
REEXAM UNIT

In re Reissue Application of
Kelly
Serial No. 09/514,448
Filed: February 23, 2000
For: U.S. Patent No. 5,065,360

In re Kelly
Reexamination Proceeding
Control No. 90/004,214
Filed: April 10, 1996
For: U.S. Patent No. 5,065,360

DECISION MERGING REEXAMINATION AND REISSUE PROCEEDINGS

The above-identified reissue and reexamination proceedings are before the Office of Patent Legal Administration for consideration of whether the proceedings should be merged at this time.

REVIEW OF FACTS

1. U.S. Patent No. 5,065,360 issued to Kelly on November 12, 1991.

2. On April 10, 1996, a third party requester filed a request for reexamination of the '360 patent, and the resulting proceeding was assigned Control No. 90/004,214.

3. Reexamination was ordered in the '214 proceeding on June 24, 1996.

4. On October 8, 1996, a stay of concurrent patent infringement litigation (in which the '360 patent was involved) was granted, pending the outcome of the '214 reexamination proceeding.

5. On December 5, 1996, a nonfinal Office action was mailed in the '214 proceeding, and patent owner, AlphaSmart, Inc., filed a response to such Office action on February 5, 1997.

6. A final rejection was then mailed on April 9, 1997, in the '214 proceeding.

7. Patent owner filed: a) a notice of appeal on June 9, 1997; b) an appeal brief on July 28, 1997; c) and an appeal brief on December 18, 1997, in the '214 proceeding [1].

8. On March 17, 1998, an examiner's answer was mailed in the '214 proceeding, which addressed the arguments in the appeal brief of December 18, 1997.

9. On July 30, 1998, patent owner filed a petition under 37 C.F.R. § 1.182, requesting that the appeal be stayed for consideration of an information disclosure statement.

10. A decision denying such petition was mailed on February 2, 1999.

11. On August 27, 1999, the Board of Patent Appeals and

---

[1] Although the appeal brief of July 28, 1997 was not matched with the file, patent owner later supplied a copy of it on December 18, 1997, along with a copy of a return postcard. The return postcard acknowledges receipt of a Transmittal Letter, an Appeal Brief (in triplicate), a check in the amount of $150.00, a Certificate of Mailing, and a Certificate of Service by the Patent and Trademark Office on July 30, 1997. In a letter dated December 31, 1997, James Dwyer, Acting Director of 2700, indicated that the receipt date stamped on the postcard receipt is evidence that an appeal brief was timely submitted. The copy of the appeal brief submitted on December 18, 1997, and the papers filed with it were accepted as timely, since the Office apparently misplaced the appeal brief originally submitted.

Interferences (BPAI) mailed an affirmance of the examiner's decision in the '214 proceeding.

12. On August 30, 1999, patent owner supplied a *copy* of a reply brief and a request for oral hearing that had apparently been timely filed on April 24, 1998, but had not matched with the case. Based on this, patent owner filed a request for vacating the BPAI's decision in the '214 proceeding and remanding the case to the examiner on September 10, 1999.

13. An order vacating the BPAI's decision and remanding the case to the examiner was mailed by the BPAI on October 20, 1999.

14. A miscellaneous communication was mailed to patent owner on December 1, 1999, in the '214 proceeding, which noted the request for oral hearing and the reply brief of April 24, 1998. The examiner indicated in such communication that the reply brief was entered and considered, but no further response was deemed necessary.

15. On February 23, 2000, **a reissue application** was filed by AlphaSmart, Inc. (patent owner) requesting reissue of the '360 patent. The application was assigned application Serial No. 09/514,448. The reissue application amends original patent claims 1, 15, 16, 19, 22, and adds new claims 25-39. Patent owner indicates that this amendment amends the claims to conform to the arguments raised by AlphaSmart during reexamination.

16. Also on February 23, 2000, AlphaSmart filed a petition under 37 C.F.R. § 1.182 to merge the reissue application with the '214 reexamination proceeding.

17. The oral hearing in the '214 proceeding was scheduled for April 6, 2000. On March 28, 2000, patent owner filed a petition to request postponement of the oral hearing based on the filing of the reissue application and the petition to merge the reissue application with the '214 reexamination proceeding.

18. The BPAI granted the petition to postpone the oral hearing in a decision mailed on April 4, 2000.

20. A notice of the reissue application filing was published in the Official Gazette on May 9, 2000.

DISCUSSION REGARDING MERGER

Under 37 C.F.R. § 1.565(d):

> "(d) If a reissue application and a reexamination proceeding on which an order pursuant to § 1.525 has been mailed are pending concurrently on a patent, a decision will normally be made to merge the two proceedings or to stay one of the two proceedings...."

As evidenced by the above review of facts, the reissue application and the reexamination proceeding are currently pending. Since the order has been mailed pursuant to § 1.525 in the reexamination proceeding, a decision under § 1.565(d) is timely.

The general policy of the Office is that examination of reissue and reexamination proceedings will not be conducted separately and at the same time for a single patent. The reason for this policy is to prevent inconsistent, and possibly conflicting, amendments from being introduced into the multiple proceedings on behalf of the patent owner. Normally, the proceedings will be merged when it is desirable to do so in the interest of expediting the prosecution of all of the proceedings.

A review of the prosecution history of the reexamination file shows that the reexamination is awaiting a decision on appeal from the final rejection of original (unamended) patent claims 1-24 by the Board of Patent Appeals and Interferences (BPAI). The original specification, drawings and patent claims are presently in the reexamination file. A review of the prosecution history for the reissue file (Application No. 09/514,448) shows that, in addition to amending the original patent claims 1, 15, 16, 19 and 22, applicant has submitted new claims 25-39 for consideration. Thus, the claims are <u>not</u> identical in both proceedings. In order to provide efficient and prompt handling of both proceedings, and to prevent inconsistent and possibly conflicting amendments from being introduced on behalf of the

patent owner, it is appropriate that the reissue and the reexamination proceedings be merged and a joint examination be conducted. Accordingly, the examination of the reissue and the reexamination proceedings will be conducted in accordance with the decision set forth below.

DECISION MERGING THE REISSUE AND REEXAMINATION PROCEEDINGS

I. Merger of Proceedings

The above-identified reissue and reexamination proceedings are hereby merged. A joint examination will be conducted in accordance with the guidelines and requirements which follow.

II. Requirement for Same Amendments in All Proceedings

The patent owner is required to maintain identical amendments in the reissue application and reexamination files for purposes of the merged proceeding. The maintenance of identical amendments in both files is required as long as the proceedings remain merged. See 37 CFR § 1.565(d). **An appropriate housekeeping amendment is required within ONE (1) MONTH of this decision placing the same amendments in both cases**, specifically, Application No. 09/514,448, and Control Number 90/004,214. The response to the requirement must be limited to placing the same amendments in both cases, and patent owner must **not** address the issues of any of the proceedings in the housekeeping amendment.

III. Conduct of the Merged Reissue and Reexamination Proceedings

1. After the appropriate housekeeping amendment (see Part II above) is received, or after the time for same expires, the examiner should promptly prepare an Office action at the most advanced point possible for the reexamination proceeding. Prosecution should be reopened by the examiner, and the appropriate action on the merits issued.

2. In the event that a housekeeping amendment is not timely submitted, any claim that does not contain identical text in both proceedings should be rejected under 35 U.S.C. 112, paragraph 2, as being indefinite as to the content of the claim, and thus failing to particularly point out the invention.

3. Because the statutory provisions for reissue application examination include, *inter alia*, provisions equivalent to 35 U.S.C. § 305 relating to the conduct of reexamination proceedings, the merged examination will be conducted on the basis of the rules relating to the broader, reissue application, examination. The examiner will apply the reissue statute, rules, and case law to the merged proceeding. **However, periods of response should be set at one (1) month to comply with the statutory requirement for special dispatch in reexamination (35 U.S.C. 305)[2].**

4. Each Office action issued by the examiner will take the form of a *single action* which jointly applies to the reissue application and the reexamination proceeding. Each action will contain identifying data *for both of the cases*, i.e, the reissue application and the reexamination proceeding. Each action will be physically entered into both files (which will be maintained as separate files).

5. Any response by the applicant/patent owner must consist of a single response, with two copies being filed for entry in the two files, with each of the two copies bearing a signature. Any such responses must be served on the third party requester, who will also be sent copies of Office actions. See 37 CFR § 1.550(e).

---

[2] As pointed out above, on October 8, 1996, a stay of patent infringement litigation (in which the '360 patent was involved) was granted, pending the outcome of the present '214 reexamination proceeding. MPEP 2286 points out that where a court issues such a stay, "[o]ffice actions in these reexamination proceedings will normally set a 1 month shortened statutory period for response rather than the 2 months usually set in reexamination proceedings. ... This 1-month period may be extended only upon a showing of sufficient cause."

6. If the reissue application ultimately matures into a reissue patent, the reexamination proceeding shall be terminated by the grant of the reissue patent, and the reissue patent will serve as the certificate under 37 CFR § 1.570. See MPEP 2285.

7. If the applicant/patent owner fails to file a timely and appropriate response to any Office action, the merged proceeding will be terminated as follows. The reissue application will be held abandoned, and the merger will be dissolved *as to the reissue application*. With respect to the reexamination proceeding that will remain, the Director of the USPTO will proceed to issue a reexamination certificate under § 1.570 in accordance with the last action of the Office, unless further action is clearly needed as a result of the difference in rules relating to reexamination and reissue proceedings.

8. If the applicant/patent owner files an express abandonment of the reissue application pursuant to 37 CFR § 1.138, the next Office action of the examiner will accept the express abandonment, dissolve the merged proceeding *as to the reissue application*, and continue examination as to the reexamination proceeding. Any grounds of rejection which are not applicable under reexamination would be withdrawn (e.g., based on public use or sale), and any new grounds of rejection which are applicable under reexamination (e.g., improperly broadened claims) would be made by the examiner upon dissolution of the merged proceeding as to the reissue application. The existence of any questions/issues remaining which cannot be considered under reexamination following the dissolution would be noted by the examiner as not being proper under reexamination pursuant to 37 CFR § 1.552(c).

9. Applicant/patent owner is advised that the filing of a continued prosecution (CPA) reissue application under 37 CFR § 1.53(d), whereby the current reissue application is considered to be expressly abandoned, will most likely result in the dissolution of the merged proceeding, a stay of the CPA reissue application, and separate, continued prosecution of the reexamination proceeding.

CONCLUSION

1. The above-identified reissue and reexamination proceedings ARE MERGED into a single consolidated proceeding.

2. Pursuant to Part II of this decision, **a housekeeping amendment is required from applicant/patent owner within ONE MONTH of this decision**, placing the same amendments in all cases of the present merged proceeding.

3. The reissue and reexamination files are being returned to the Board of Patent Appeals and Interferences for any processing needed with respect to the appeal taken in the reexamination proceeding. The files will then be forwarded to the examiner via the Director of Technology Center 2700, to be stored and await receipt of the housekeeping amendment or the expiration of time for submitting same. The examiner will then promptly issue an Office action for the merged proceeding. All further examination should be conducted in accordance with Part III of this decision.

4. Telephone inquiries related to this decision should be directed to Lynn M. Kryza at (703) 306-5682.

Kenneth M. Schor
Senior Legal Advisor
Office of Patent Legal Administration

July 18, 2000
C:\kiva\pet3\4214-bd.lyn

UNITED STATES DEPARTMENT OF COMMERCE
Patent and Trademark Office
Address: COMMISSIONER OF PATENTS AND TRADEMARKS
Washington, D.C. 20231

SERIAL NUMBER	FILING DATE	FIRST NAMED APPLICANT	ATTORNEY DOCKET NO.
09/514,448	2-23-00		

PATENT NUMBER	DATE OF THIS NOTICE	PAPER NUMBER
5,065,360	7/20/00	34

NOTICE OF MERGED REEXAM - REISSUE PROCEEDING

This reissue application has been merged with the reexamination proceeding listed below:

Control No. 90/ 004,214 Filing Date: 4/10/96

Requester (name, address) TRACE RESEARCH & DEVELOPMENT CENTER
5901 RESEARCH PARK BLVD.
MADISON, WI 53719

The front face of the reissue patent will include the following paragraph:

REEXAMINATION RESULTS

The questions raised in reexamination request No. 90/ 004, 214, filed 4/10/96, have been considered and the results thereof are reflected in this reissue patent which constitutes the reexamination certificate required by 35 U.S.C. 307 as provided in 37 CFR 1.570(e).

UNITED STATES PATENT AND TRADEMARK OFFICE

Commissioner for Patents
United States Patent and Trademark Office
Washington, D.C. 20231
www.uspto.gov

Paper No. 6
Mailed

JUL 1 1 2000

Director's Office
Group 2700

GREG T SUEOKA
FENWICK & WEST
TWO PALO ALTO SQUARE
PALO ALTO, CA 94306

In re Application of:)
Fang Wu, et al.)
Application No.: 09/514,577)
Filed: February 28, 2000)
For: SYSTEM AND METHOD FOR)
MULTIPLE CHANNEL STATISTICAL)
RE-MULTIPLEXING)

DECISION ON REQUEST TO WITHDRAW AS ATTORNEY

This is a decision on the Request To Withdraw from Representation filed, May 31, 2000.

A grantable request to withdraw as attorney of record should indicate thereon the present mailing addresses of the attorney(s) who is/are withdrawing from the record and of the applicant. The request for withdrawal must be signed by every attorney seeking to withdraw or contain a clear indication that one attorney is signing on behalf of another/others. A request to withdraw will not be approved unless at least 30 (thirty) days would remain between the date of approval and the later of the expiration date of a time to file a response or the expiration date of the maximum time period which can be extended under 37 C.F.R. § 1.136(a). The effective date of withdrawal being the date of decision and not the date of request. See M.P.E.P. § 402.06. 37 C.F.R. § 1.36 further requires that the applicant or patent owner be notified of the withdrawal of the attorney or agent.

The request is **GRANTED**.

It is noted that the Request for Withdrawal as Attorney or Agent is only effective for Greg T. Seuoka, since he is the only attorney/agent specifically mentioned in the request and there is no other indication that he is signing on behalf of any other practitioners.

All future communications from the Office will be directed to the below-listed address until otherwise notified by applicant. This correspondence address is provided by the withdrawn attorney(s). Applicant is reminded of the obligation to promptly notify the Patent and Trademark Office (Office) of any change in correspondence address to ensure receipt of all communications from the Office.

Kenneth A. Wieder
Special Program Examiner
Technology Center 2700
Communications & Information Processing
(703) 305-4710

cc: Jeff Weaver
Beyer, Weaver, Thomas & Nguyen, LLP
2030 Addison Street, 7th Floor
Berkeley, CA 94704

UNITED STATES PATENT AND TRADEMARK OFFICE

Commissioner for Patents
United States Patent and Trademark Office
P.O. Box 1450
Alexandria, VA 22313-1450
www.uspto.gov

GREENBLUM & BERNSTEIN, P.L.C.
1950 ROLAND CLARKE PLACE
RESTON, VA 20191

COPY MAILED

JAN 07 2005

OFFICE OF PETITIONS
ON PETITION

In re Application of :
Kiyoshi Toyoda :
Application No. 09/514,649 :
Filed: February 29, 2000 :
Attorney Docket No. P19157 :

This is a decision on the petition under 37 CFR 1.137(b), filed November 23, 2004, to revive the above-identified application.

The petition is **GRANTED.**

The above-identified application became abandoned for failure to reply in a timely manner to the final Office action mailed May 6, 2004, which set a shortened statutory period for reply of three (3) months. No extensions of time under the provision of 37 CFR 1.136(a) were obtained. Accordingly, the above-identified application became abandoned on August 7, 2004.

The above-identified application is being revived solely for purposes of continuity with a Request For Continued Examination (RCE) filed on November 23, 2004.

Telephone inquiries concerning this decision should be directed to Irvin Dingle at (571) 272-3210.

The matter is being forwarded to Technology Center AU 2622 for further processing.

Irvin Dingle
Petitions Examiner
Office of Petitions
Office of the Deputy Commissioner
for Patent Examination Policy

UNITED STATES PATENT AND TRADEMARK OFFICE

COMMISSIONER FOR PATENTS
UNITED STATES PATENT AND TRADEMARK OFFICE
WASHINGTON, D.C. 20231
www.uspto.gov

Paper No. 4
COPY MAILED

SEP 07 2000

SPECIAL PROGRAMS OFFICE
DAC FOR PATENTS

LEYDIG VOIT & MAYER LTD
TWO PRUDENTIAL PLAZA
SUITE 4900
180 NORTH STETSON STREET
CHICAGO IL 60601-6780

In re Application of Specht et al. Application No. 09/514,711 Filed: February 28, 2000 Attorney Docket No. 203947 For: MOPS AND MOP COMPONENTS	DECISION REFUSING STATUS UNDER 37 CFR 1.47(a)

This is a decision on the petition under 37 CFR 1.47(a), filed July 31, 2000.

The petition is **DISMISSED**.

Any request for reconsideration of this decision must be submitted within TWO (2) MONTHS from the mail date of this decision. Extensions of time under 37 CFR 1.136(a) are permitted. Any response should be entitled "Request for Reconsideration of Petition Under 37 CFR 1.47(a)" and may include an oath or declaration executed by the inventor. **Failure to respond will result in abandonment of the application.**

The above-identified application was filed on February 28, 2000 without an executed oath or declaration. Accordingly, on April 26, 2000, a "Notice to File Missing Parts of Nonprovisional Application" was mailed, requiring an executed oath or declaration and a surcharge for its late filing.

In response, on July 31, 2000, petitioner filed a petition for a two month extension of time and required fee, a declaration executed by joint inventor Specht, the surcharge, the petition fee, and the instant petition. A declaration of facts of Timothy Molek, the assignee of the invention, accompanies the petition. Mr. Hughes states that he was unable to discover the whereabouts of Mr. Edgar Wagner, the non-signing inventor.

A grantable petition under 37 CFR 1.47(a) requires

(1) a petition including proof of the pertinent facts establishing that the joint inventor(s) refuses to join, or cannot be found or reached after diligent effort.
(2) a proper oath or Declaration executed by the available joint inventor(s),
(3) the fee of $130 as specified in 37 CFR § 1.17(h), and
(4) the last known address of the omitted inventor(s).

This petition lacks item (1) above.

As to item (1), Rule 47 applicant has failed to show that the inventor cannot be reached. Mr. Molek states that he received information from an unnamed source that Mr. Wagner had moved from his last known address and that no one Mr. Molek contacted knew Mr. Wagner's current address. Mr. Molek asserts that he made calls to Mr. Wagner's last known telephone number, but no one returned his messages. These efforts do not establish that Mr. Wagner cannot be reached. A copy of the application papers should be sent to the last known address of the non-signing

inventor with a request that he sign the declaration for the patent application and a request for a forwarding address. If the papers are returned and other attempts to locate the inventor, e.g. through an Internet search, e-mail or the telephone continue to fail, then applicant will have established that the inventor cannot be reached.

Further correspondence with respect to this matter should be addressed as follows:

By mail: Assistant Commissioner for Patents
Box DAC
Washington, D.C. 20231

By facsimile: (703) 308-6916
Attn: Special Program Law Office

By hand: Special Program Law Office
2201 South Clark Place
Crystal Plaza 4, Suite 3C23
Arlington, VA 22202

Telephone inquiries should be directed to Petitions Attorney E. Shirene Willis at (703) 308-6712.

Beverly M. Flanagan
Supervisory Petitions Examiner
Office of Petitions
Office of the Deputy Commissioner
for Patent Examination Policy

UNITED STATES PATENT AND TRADEMARK OFFICE

COMMISSIONER FOR PATENTS
UNITED STATES PATENT AND TRADEMARK OFFICE
WASHINGTON, D.C. 20231
www.uspto.gov

Paper No. 6

LEYDIG VOIT & MAYER LTD
TWO PRUDENTIAL PLAZA
SUITE 4900
180 NORTH STETSON STREET
CHICAGO IL 60601-6780

COPY MAILED

JUL 9 2001

OFFICE OF PETITIONS
A/C PATENTS

In re Application of
Specht et al.
Application No. 09/514,711
Filed: February 28, 2000
Attorney Docket No. 203947
For: MOPS AND MOP COMPONENTS

DECISION REFUSING
STATUS UNDER
37 CFR 1.47(a)

This is a decision on the renewed petition under 37 CFR 1.47(a), filed February 7, 2001.

The petition is **DISMISSED**.

Any request for reconsideration of this decision must be submitted within TWO (2) MONTHS from the mail date of this decision. Extensions of time under 37 CFR 1.136(a) are permitted. Any response should be entitled "Request for Reconsideration of Petition Under 37 CFR 1.47(a)" and may include an oath or declaration executed by the inventor. **Failure to respond will result in abandonment of the application.**

The above-identified application was filed on February 28, 2000 without an executed oath or declaration. Accordingly, on April 26, 2000, a "Notice to File Missing Parts of Nonprovisional Application" was mailed, requiring an executed oath or declaration and a surcharge for its late filing.

In response, on July 31, 2000, petitioner filed a petition for a two month extension of time and required fee, a declaration executed by joint inventor Specht, the surcharge, the petition fee, and the instant petition. A declaration of facts of Timothy Molek, the assignee of the invention, accompanied the petition. Mr. Molek states that he was unable to discover the whereabouts of Mr. Edgar Wagner, the non-signing inventor.

This petition was dismised on September 7, 2000 for failure to prove the non-signing inventor could not be found or reached after diligent effort.

A grantable petition under 37 CFR 1.47(a) requires

(1) a petition including proof of the pertinent facts establishing that the joint inventor(s) refuses to join, or cannot be found or reached after diligent effort,
(2) a proper oath or Declaration executed by the available joint inventor(s),
(3) the fee of $130 as specified in 37 CFR § 1.17(h), and
(4) the last known address of the omitted inventor(s).

This petition lacks items (1) and (4) above.

As to item (1), Rule 47 applicant has failed to show that the inventor refuses to join in the filing of the above-identified application. While petitioner has discovered Mr. Wagner's whereabouts, petition has not mailed a copy of the application papers to his last known address with a request that he sign the declaration for the patent application. The Declaration of Allen E. Hoover establishes that only a Declaration was sent to the last known address. The Office requires that the non-signing inventor be provided with a complete copy of the application as filed. This includes the specification with claims, drawings, if any, and a declaration. See MPEP 409.03(d). Mr. Wagner must have the complete application in his possession in order to make an informed decision as to whether he joins in its filing. When petitioner can show that Mr. Wagner was mailed or received the complete application and that he either refused to sign the declaration or would not respond to the request that he sign the declaration, petitioner will have satisfied this requirement.

As to item (4), the last known address specified in the renewed petition lacks a zip code.

Pursuant to petitioner's authorization, Deposit Account No. 12-1216 will be charged $890.00 for a three month extension of time fee.

Further correspondence with respect to this matter should be addressed as follows:

By mail: Commissioner for Patents
Box DAC
Washington, D.C. 20231

By facsimile: (703) 308-6916
Attn: Office of Petitions

By hand: Office of Petitions
2201 South Clark Place
Crystal Plaza 4, Suite 3C23
Arlington, VA 22202

Telephone inquiries should be directed to Petitions Attorney E. Shirene Willis at (703) 308-6712.

E. Shirene Willis
Petitions Attorney
Office of Petitions
Office of the Deputy Commissioner
for Patent Examination Policy

Beverly M. Flanagan
Supervisory Petitions Examiner
Office of Petitions
Office of the Deputy Commissioner
for Patent Examination Policy

UNITED STATES PATENT AND TRADEMARK OFFICE

COMMISSIONER FOR PATENTS
UNITED STATES PATENT AND TRADEMARK OFFICE
WASHINGTON, D.C. 20231
www.uspto.gov

Paper No. 8

LEYDIG VOIT & MAYER LTD
TWO PRUDENTIAL PLAZA
SUITE 4900
180 NORTH STETSON STREET
CHICAGO IL 60601-6780

COPY MAILED

AUG 2 4 2001

OFFICE OF PETITIONS

In re Application of
Specht et al.
Application No. 09/514,711
Filed: February 28, 2000
Attorney Docket No. 203947
For: MOPS AND MOP COMPONENTS

: DECISION ACCORDING
: STATUS UNDER
: 37 CFR 1.47(a)

This is in response to the reconsideration petition under 37 CFR 1.47(a), filed August 16, 2001.

The petition is granted.

Petitioner has shown that the non-signing inventor has refused to join in the filing of the above-identified application after having been presented with the application papers. Specifically, the petition signed by Attorney Hoover establishes that the inventor was mailed the application papers, including the specification, claims and drawings, but failed to respond to the request that he sign the declaration. Petitioner has submitted a declaration in compliance with 37 CFR 1.63 and 1.64.

This application and papers have been reviewed and found in compliance with 37 CFR 1.47(a). This application is hereby accorded Rule 1.47(a) status.

As provided in Rule 1.47(c), this Office will forward notice of this application's filing to the non-signing inventor at the address given in the petition. Notice of the filing of this application will also be published in the Official Gazette.

After this decision is mailed, the above-identified application will be forwarded to the Office of Initial Patent Examination for issuance of a corrected filing receipt. Thereafter the application will be returned to Technology Center 1700 for further processing.

Telephone inquiries should be directed to the undersigned at (703) 308-6712.

E. Shirene Willis

E. Shirene Willis
Petitions Attorney
Office of Petitions
Office of the Deputy Commissioner
for Patent Examination Policy

UNITED STATES PATENT AND TRADEMARK OFFICE

COMMISSIONER FOR PATENTS
UNITED STATES PATENT AND TRADEMARK OFFICE
WASHINGTON, D.C. 20231
www.uspto.gov

Paper No. 9

EDGAR WAGNER
3804 NORTH TRIPP AVENUE
CHICAGO, IL 60641

COPY MAILED

AUG 2 4 2001

OFFICE OF PETITIONS

In re Application of
Specht et al.
Application No. 09/514,711
Filed: February 28, 2000
Attorney Docket No. 203947
For: MOPS AND MOP COMPONENTS

LETTER

Dear Mr. Wilson:

You are named as a joint inventor in the above identified United States patent application, filed under the provisions of 35 U.S.C. 116 (United States Code), and 37 CFR 1.47(a), Rules of Practice in Patent Cases. Should a patent be granted on the application you will be designated therein as a joint inventor.

As a named inventor you are entitled to inspect any paper in the file wrapper of the application, order copies of all or any part thereof (at a prepaid cost per 37 CFR 1.19) or make your position of record in the application. Alternatively, you may arrange to do any of the preceding through a registered patent attorney or agent presenting written authorization from you. If you care to join the application, counsel of record (see below) would presumably assist you. Joining in the application would entail the filing of an appropriate oath or declaration by you pursuant to 37 CFR 1.63.

Requests for information regarding your application should be directed to the File Information Unit at (703)308-2733. Information regarding how to pay for and order a copy of the application, or a specific paper in the application, should be directed to Certification Division at (703)308-9726 or 1(800)972-6382 (outside the Washington D.C. area).

Telephone inquiries regarding this communication should be directed to the undersigned at (703) 308-6712.

E. Shirene Willis

E. Shirene Willis
Petitions Attorney
Office of Petitions
Office of the Deputy Commissioner
for Patent Examination Policy

ATTORNEY OF RECORD: LEYDIG VOIT & MAYER LTD
TWO PRUDENTIAL PLAZA
SUITE 4900
180 NORTH STETSON STREET
CHICAGO IL 60601-6780

UNITED STATES PATENT AND TRADEMARK OFFICE

COMMISSIONER FOR PATENTS
UNITED STATES PATENT AND TRADEMARK OFFICE
WASHINGTON, D.C. 20231
www.uspto.gov

Paper No. 13

NEIL A. STEINBERG, ESQ.
RAMBUS INC.
2465 LATHAM STREET
MOUNTAIN VIEW, CA 94040

COPY MAILED

JAN 0 4 2001

OFFICE OF PETITIONS
A/C PATENTS

In re Application of :
Michael Farmwald et al :
Application No. 09/514,872 : ON PETITION
Filed: February 28, 2000 :
Attorney Docket No. RA001C10 :

This is a decision on the petition under 37 CFR 1.313(b)(5), filed by facsimile on December 1, 2000, which is being treated as a petition under 37 CFR 1.313(c)(3) to withdraw the above-identified application from issue after payment of the issue fee. See 1233 *Official Gazette* 54 (April 11, 2000).

The petition is **GRANTED.**

The above-identified application is hereby withdrawn from issue in favor of a continued prosecution application (CPA) under 37 CFR 1.53(d).

Petitioner is advised that the issue fee paid on September 22, 2000 in the parent application is not refundable nor can it be applied towards any new Notice of Allowance which may issue on the CPA filed December 1, 2000.

Telephone inquiries should be directed to the undersigned at (703) 305-8680.

The application is being forwarded to Technology Center AU 2781 for processing of the CPA.

Frances Hicks

Frances Hicks
Petitions Examiner
Office of Petitions
Office of the Deputy Commissioner
for Patent Examination Policy

UNITED STATES PATENT AND TRADEMARK OFFICE

Commissioner for Patents
United States Patent and Trademark Office
P.O. Box 1450
Alexandria, VA 22313-1450
www.uspto.gov

JJGJR.: 02-07

Paper No: __

COPY MAILED

MAR 0 1 2007

OFFICE OF PETITIONS

MEDTRONIC INCORPORATED
7000 CENTRAL AVENUE NE
MINNEAPOLIS MN 55432

In re Application of	:	
Woloszko, et al.	:	DECISION
Application No.: 09/514,906	:	
Filing Date: 28 February, 2000	:	
Attorney Docket No. P-7326.03-DIV 3	:	

This is a decision on a petition filed on 21 August, 2006, alleging unintentional delay under 37 C.F.R. §1.137(b).

NOTES:

Monitoring of the status of applications on Private PAIR and charges or lack thereof to one's deposit account can inform one's management of application responses and provide an indication when mailings of Office actions should be expected and/or if transactions have occurred.

Status Inquiries filed at three (3) or four (4) month intervals provide a demonstration of diligence and attention in supporting a petition seeking relief under 37 C.F.R. §1.181 because regulatory requirements require the filing of such a petition within two (2) months of the act complained of.

For the reasons set forth below the petition as considered under 37 C.F.R. §1.137(b) is **GRANTED**.

BACKGROUND

The record reflects that:

- Petitioner failed to reply to a non-final Office action mailed on 5 June, 2000, with reply due absent an extension of time on or before 5 September, 2000;
- the application went abandoned by operation of law after midnight 5 September, 2000;
- the Office mailed the Notice of Abandonment on 2 February, 2001;
- Petitioner avers that a petition to revive was transmitted on 27 September, 2001–and a copy of petition bearing a certificate of transmission so dated was submitted with the 21 August, 2006, filing–however, the record does not reflect receipt of the filing;
- the instant petition is accompanied by a fee authorization, as well as a reply in the form of an amendment, however, the statement of unintentional delay does not comport with the regulation.

Therefore, Petitioner's incomplete statement of unintentional delay is being read to state that: the entire delay from the due date of the reply to the filing of a grantable petition was unintentional. If this not correct, Petitioner Stephen W. Bauer (Reg. No. 32,192) must immediately so notify the Office consistent with his duty of candor to the Office.

STATUTES, REGULATIONS AND ANALYSIS

Congress has authorized the Commissioner to "revive an application if the delay is shown to the satisfaction of the Commissioner to have been "unavoidable." 35 U.S.C. §133 (1994).[1]

The regulations at 37 C.F.R. §1.137(a) and (b) set forth the requirements for a petitioner to revive a previously unavoidably or unintentionally, respectively, abandoned application under this congressional grant of authority.

The language of 35 U.S.C. §133 and 37 C.F.R. §1.137(a) is clear, unambiguous, and without qualification: the delay in tendering the reply to the outstanding Office action, as well as filing

---

[1] 35 U.S.C. §133 provides:
35 U.S.C. §133 Time for prosecuting application.
Upon failure of the applicant to prosecute the application within six months after any action therein, of which notice has been given or mailed to the applicant, or within such shorter time, not less than thirty days, as fixed by the Commissioner in such action, the application shall be regarded as abandoned by the parties thereto, unless it be shown to the satisfaction of the Commissioner that such delay was unavoidable.

the first petition seeking revival, must have been unavoidable for the reply now to be accepted on petition.[2]

Delays in responding properly raise the question whether delays are unavoidable.[3] Where there is a question whether the delay was unavoidable, Petitioners must meet the burden of establishing that the delay was unavoidable within the meaning of 35 U.S.C. §133 and 37 C.F.R. §1.137(a).[4] And the Petitioner must be diligent in attending to the matter.[5] Failure to do so does not constitute the care required under Pratt, and so cannot satisfy the test for diligence and due care.

(By contrast, unintentional delays are those that do not satisfy the very strict statutory and regulatory requirements of unavoidable delay, and also, by definition, are not intentional.[6]))

Allegations as to
Unintentional Delay

The requirements for the granting of a petition under 37 C.F.R. §1.137(b) are a petition, fee, reply, showing/statement of unintentional delay, and–where appropriate–a terminal disclaimer and fee.

With the previously outlined presumption, Petitioner is appears to have satisfied the requirements of the regulation.

CONCLUSION

The petition under 37 C.F.R. §1.137(b) is **granted**.

The instant file is released to Technology Center 3700 for further processing in due course.

---

[2] Therefore, by example, an unavoidable delay in the payment of the Filing Fee might occur if a reply is shipped by the US Postal Service, but due to catastrophic accident, the delivery is not made.

[3] See: *Changes to Patent Practice and Procedure*; *Final Rule Notice*, 62 *Fed. Reg.* at 53158-59 (October 10, 1997), 1203 *Off. Gaz. Pat. Office* at 86-87 (October 21, 1997).

[4] See: In re Application of G, 11 USPQ2d 1378, 1380 (Comm'r Pats. 1989).

[5] See: Diligence in Filing Petitions to Revive and Petitions to Withdraw the Holding of Abandonment, 1124 Off. Gaz. Pat. Office 33 (March 19, 1991). It was and is Petitioner's burden to exercise diligence in seeking either to have the holding of abandonment withdrawn or the application revived. See 1124 Off. Gaz. Pat. Office supra.

[6] Therefore, by example, an unintentional delay in the reply might occur if the reply and transmittal form are to be prepared for shipment by the US Postal Service, but other pressing matters distract one's attention and the mail is not timely deposited for shipment.

While telephone inquiries regarding this decision may be directed to the undersigned at (571) 272-3214, it is noted that all practice before the Office is in writing (see: 37 C.F.R. §1.2[7]) and the proper authority for action on any matter in this regard are the statutes (35 U.S.C.), regulations (37 C.F.R.) and the commentary on policy (MPEP). Therefore, no telephone discussion may be controlling or considered authority for Petitioner's action(s).

John J. Gillon, Jr.
Senior Attorney
Office of Petitions

[7] The regulations at 37 C.F.R. §1.2 provide:
§1.2 Business to be transacted in writing.
All business with the Patent and Trademark Office should be transacted in writing.The personal attendance of applicants or their attorneys or agents at the Patent and Trademark Office is unnecessary. The action of the Patent and Trademark Office will be based exclusively on the written record in the Office. No attention will be paid to any alleged oral promise, stipulation,or understanding in relation to which there is disagreement or doubt.

UNITED STATES PATENT AND TRADEMARK OFFICE

COMMISSIONER FOR PATENTS
UNITED STATES PATENT AND TRADEMARK OFFICE
P.O. BOX 1450
ALEXANDRIA, VA 22313-1450
www.uspto.gov

APR - 8 2004

#10

DAVID S MACKENZIE
HORTECH INC
P O BOX 533
SPRING LAKE MI 49456

In re Application of	:
Christopher Howe	:
Serial No.: 09/514,930	: PETITION DECISION
Filed: February 28, 2000	:
Attorney Docket No.:	:

This is in response to the informal petition under 37 CFR 1.181, filed September 25, 2003, requesting withdrawal of abandonment based on timely filing of a reply. The delay in acting on this petition is regretted.

A review of the file history shows that the examiner mailed an Office action to applicant on January 23, 2003, setting a three month shortened statutory period for reply. Upon failure to receive a reply the application became abandoned by operation of law although a Notice of Abandonment has yet to be mailed. Applicants state that a reply to the Office action was submitted on March 23, 2003, and provide a US Postal Service date stamped Certified Mail receipt evidencing mailing of a communication to the Office on March 23, 2003. The receipt identifies the addressee, but not the contents of the communication. However it is presumed to be the reply, a copy of which is supplied with the petition, that was filed for this application. The date of mailing appearing on the receipt for Certified Mail cannot be considered the date the reply was received in the Office, however it is more than one month prior to the due date for reply and normal Postal Service processing would have delivered the reply to the Office in a less than a month. In the future, applicant is encouraged to use the Certificate Of Mailing procedure set forth in 37 CFR 1.8 as this will establish a date of receipt of a reply in the Office. Absent such certification, the date of receipt is the Mail Room receipt date stamped on each piece of correspondence received, not the date it was deposited with the US Postal Service, either as regular mail or Certified Mail. In view of the evidence presented, the Notice of Abandonment is withdrawn and the application restored to pending status with the mailing of this decision.

The petition is **GRANTED**.

The reply will be entered and the application will be forwarded to the examiner for further consideration.

Should there be any questions about this decision please contact William R. Dixon, Jr., by letter addressed to Director, TC 1600, at the address listed above, or by telephone at 571-272-0519 or by facsimile sent to the general Office facsimile number, 703-872-9306.

Bruce M. Kisliuk
Director, Technology Center 1600

UNITED STATES PATENT AND TRADEMARK OFFICE

COMMISSIONER FOR PATENTS
UNITED STATES PATENT AND TRADEMARK OFFICE
P.O. BOX 1450
ALEXANDRIA, VA 22313-1450
www.uspto.gov

Paper No.

ROTHWELL, FIGG, ERNST &
MANBECK, P.C.
1425 K STREET, NW
SUITE 800
WASHINGTON DC 20005

COPY MAILED

JUL 23 2009

OFFICE OF PETITIONS

In re Application of	:	DECISION ON
Richard Fernandes	:	APPLICATION FOR
Application No. 09/514,946	:	PATENT TERM ADJUSTMENT
Filed: February 28, 2000	:	
Attorney Docket No. 2470-105	:	

This is in response to the PETITION TO CORRECT PATENT TERM ADJUSTMENT filed on April 20, 2009. Patentees request that the Patent Term Adjustment for the above-identified patent be increased from five hundred (500) days to one thousand six hundred eighty-one (1681) days.

The application for patent term adjustment patent is **GRANTED**.

The Office has updated the PALM and PAIR screens to reflect that the correct Patent Term Adjustment (PTA) at the time of mailing of the Notice of Allowance is ONE THOUSAND SIX HUNDRED EIGHTY-ONE (1681) days. A copy of the updated PAIR screen, showing the correct determination, is enclosed.

On January 21, 2009, the Office mailed the Determination of Patent Term Adjustment under 35 U.S.C. 154(b) in the above-identified application. The Notice stated that the patent term adjustment to date is five hundred (500) days. This was based on an Office delay of 562 days reduced by an applicant delay of 62 days. Applicants timely filed the instant application for patent term adjustment.[1]

[1] A review of PALM financial records indicates that the issue fee was paid on April 20, 2009.

Applicants assert entitlement to additional patent term adjustment for Office delay because a notice of allowance was mailed on January 21, 2009, which is four (4) months and 1181 days after the day after the date of mailing, on June 27, 2005, of a decision on appeal by the Board of Patent Appeals and Interferences (BPAI) reversing the examiner.

37 CFR 1.703(a)(5) states, in pertinent part that the period of adjustment under § 1.702(a) is the sum of the following periods: The number of days, if any, in the period beginning on the day after the date that is four months after the date of a final decision by the Board of Patent Appeals and Interferences or by a Federal court in an appeal under 35 U.S.C. 141 or a civil action under 35 U.S.C. 145 or 146 where at least one allowable claim remains in the application and ending on the date of mailing of either an action under 35 U.S.C. 132 or a notice of allowance under 35 U.S.C. 151, whichever occurs first.

On June 27, 2005, the BPAI decision reversing the examiner was mailed. On January 21, 2009, four (4) months and 1181 days after the day after the date that the final decision by the BPAI was mailed, a notice of allowance was mailed. Accordingly, entry of a period of Office delay of 1181 days is warranted.

In view thereof, the patent term adjustment at the time of the mailing of the notice of allowance should be adjusted to one thousand six hundred eighty-one 1681 days (1743 days of Office delay reduced by 62 days of applicant delay).

Applicants are reminded that any delays by the Office pursuant to 37 CFR 1.702(a)(4) and 1.702(b) and any applicant delays under 37 CFR 1.704(c)(10) will be calculated at the time of issuance of the patent and applicant will be notified in the Issue Notification letter that is mailed to applicants approximately three (3) weeks prior to issue.

The $200 fee set forth in 37 CFR 1.18(e) has been received. No additional fees are required.

The application file is being forwarded to the Office of Data Management for issuance of the patent.

The application is being forwarded to the Office of Patent Publication for issuance of the application. The patent term adjustment indicated on the patent (as shown on the Issue Notification mailed about three weeks prior to patent issuance) will include any additional adjustment accrued both for Office delay in issuing the patent more than four months after payment of the issue fee and satisfaction of all outstanding requirements, and for the Office taking in excess of three years to issue the patent (to the extent that the three-year period does not overlap with periods already accorded).

Telephone inquiries specific to this matter should be directed to Senior Petitions Attorney Douglas I. Wood at (571) 272-3231.

Nancy Johnson
Senior Petitions Attorney
Office of Petitions

Enclosure: Copy of adjusted PAIR calculation

Day : Tuesday
Date: 7/21/2009

PALM INTRANET

Time: 19:14:42

PTA Calculations for Application: 09/514946			
Application Filing Date:	02/28/2000	PTO Delay (PTO):	562
Issue Date of Patent:		Three Years:	0
Pre-Issue Petitions:	0	Applicant Delay (APPL):	62
Post-Issue Petitions:	0	Total PTA (days):	1681
PTO Delay Adjustment:	1181		

File Contents History

Number	Date	Contents Description	PTO	APPL	START
65	07/21/2009	ADJUSTMENT OF PTA CALCULATION BY PTO	1181		
54	01/21/2009	MAIL NOTICE OF ALLOWANCE			
53	01/14/2009	ISSUE REVISION COMPLETED			
52	01/14/2009	DOCUMENT VERIFICATION			
51	01/14/2009	NOTICE OF ALLOWANCE DATA VERIFICATION COMPLETED			
50	01/31/2006	NOTICE OF ALLOWABILITY			
49	06/28/2005	MAIL BPAI DECISION ON APPEAL - REVERSED	562		36
48	06/27/2005	BPAI DECISION - EXAMINER REVERSED			
47	12/23/2004	DOCKETING NOTICE MAILED TO APPELLANT			
46	12/23/2004	ASSIGNMENT OF APPEAL NUMBER			
45	10/22/2004	APPEAL AWAITING BPAI DOCKETING			
44	09/21/2004	MAIL REPLY BRIEF NOTED BY EXAMINER			
43	09/20/2004	REPLY BRIEF NOTED BY EXAMINER			
42	07/13/2004	DATE FORWARDED TO EXAMINER			
41	07/06/2004	REPLY BRIEF FILED			
40	05/06/2004	MAIL EXAMINER'S ANSWER			
39	05/03/2004	EXAMINER'S ANSWER TO APPEAL BRIEF			
38	02/27/2004	DATE FORWARDED TO EXAMINER			
37	02/17/2004	APPEAL BRIEF FILED			
36	12/15/2003	NOTICE OF APPEAL FILED		62	28
35	12/15/2003	REQUEST FOR EXTENSION OF TIME - GRANTED			
34	11/14/2003	MAIL ADVISORY ACTION (PTOL - 303)			
33	11/13/2003	ADVISORY ACTION (PTOL-303)			
32	10/23/2003	DATE FORWARDED TO EXAMINER			

31	10/14/2003	AMENDMENT AFTER FINAL REJECTION			
30	10/07/2003	CORRESPONDENCE ADDRESS CHANGE			
29	08/28/2003	CORRESPONDENCE ADDRESS CHANGE			
28	07/14/2003	MAIL FINAL REJECTION (PTOL - 326)			
27	07/11/2003	FINAL REJECTION			
26	05/03/2003	DATE FORWARDED TO EXAMINER			
25	04/28/2003	RESPONSE AFTER NON-FINAL ACTION			
24	01/28/2003	MAIL NON-FINAL REJECTION			
23	01/27/2003	NON-FINAL REJECTION			
22	11/19/2002	DATE FORWARDED TO EXAMINER			
21	11/12/2002	AMENDMENT SUBMITTED/ENTERED WITH FILING OF CPA/RCE			
20	11/19/2002	DATE FORWARDED TO EXAMINER			
19	11/12/2002	CONTINUING PROSECUTION APPLICATION - CONTINUATION (ACPA)			
18	11/19/2002	DISPOSAL FOR A RCE/CPA/129 (EXPRESS ABANDONMENT IF CPA)			
17	11/12/2002	WORKFLOW - REQUEST FOR CPA - BEGIN			

Search Another: Application# Search

EXPLANATION OF PTA CALCULATION

EXPLANATION OF PTE CALCULATION

To go back, right click here and select Back. To go forward, right click here and select Forward. To refresh, right click here and select Refresh.

Back to OASIS | Home page

UNITED STATES PATENT AND TRADEMARK OFFICE

Commissioner for Patents
United States Patent and Trademark Office
P.O. Box 1450
Alexandria, VA 22313-1450
www.uspto.gov

STAAS & HALSEY LLP
SUITE 700
1201 NEW YORK AVENUE, N.W.
WASHINGTON, DC 20005

COPY MAILED

OCT 16 2007

OFFICE OF PETITIONS

In re Patent of Seo :
Patent No. 7,057,990 :
Issue Date: June 6, 2006 : Decision on Petition
Application No. 09/515,101 :
Filing Date: February 29, 2000 :
Attorney Docket No. 1349.1077 :

This is a decision on the petition under 37 CFR 1.182, filed June 20, 2007, requesting issuance of duplicate Letters Patent for the above-identified application.

The petition is **granted**.

The Office of Patent Publications is directed to issue duplicate Letters Patent.

A copy of this decision is being forwarded to the Office of Patent Publications for issuance of duplicate Letters Patent.

Telephone inquiries related to the petition should be directed to Petitions Attorney Steven Brantley at (571) 272-3203. Any questions concerning delays in the issuance of the duplicate Letters Patent should be directed to Krystal Paige at (703) 308-9250 ext. 139.

Charles Steven Brantley
Petitions Attorney
Office of Petitions

cc: Kimberly Terrell (FAX 571-273-9740)
Krystal Paige, South Tower, 8th Floor, Room C-32 (FAX 571-270-9937)

UNITED STATES PATENT AND TRADEMARK OFFICE

COMMISSIONER FOR PATENTS
UNITED STATES PATENT AND TRADEMARK OFFICE
WASHINGTON, D.C. 20231
www.uspto.gov

Paper No. 9

COPY MAILED
JUL 12 2002
OFFICE OF PETITIONS

Thomas C. Webster
Blakely, Sokoloff, Taylor, & Zafman LLP
12400 Wilshire Boulevard
Seventh Floor
Los Angeles, CA 90025

In re Application of	:	
Tsutomu Shimomura, et al.	:	
Application No. 09/515,152	:	ON PETITION
Filed: February 29, 2000	:	
Attorney Docket No. 04259.P057D1	:	

This is a decision on the petition under 37 CFR 1.137(b), filed April 29, 2002, to revive the above-identified application.

The petition is **GRANTED**.

The above-identified application became abandoned for failure to reply in a timely manner to the Notice To File Missing Parts Of Non-Provisional Application mailed April 18, 2000. The Notice set a period for reply of two(2) months from the mail date of the Notice. No extensions of time under the provisions of 37 CFR 1.136(a) were obtained. Accordingly, the above-identified application became abandoned on June 19, 2000.

Telephone inquiries concerning this decision should be directed to Cheryl Gibson-Baylor at (703)308-5111, or in her absence, Sherry Brinkley at (703)305-9220.

The application file is being forwarded to Office of Initial Patent Examination for further processing.

Cheryl Gibson-Baylor
Petitions Examiner
Office of Petitions
Office of the Deputy Commissioner
for Patent Examination Policy

for Sherry Brinkley
Petitions Examiner

UNITED STATES PATENT AND TRADEMARK OFFICE

COMMISSIONER FOR PATENTS
UNITED STATES PATENT AND TRADEMARK OFFICE
P.O. BOX 1450
ALEXANDRIA, VA 22313-1450
www.uspto.gov

COPY MAILED

FEB 17 2005

OFFICE OF PETITIONS

LAW OFFICES OF NAREN CHAGANTI
432 S. CURSON AVE, STE. 12H
LOS ANGELES, CA 90036

In re Application of :
Emil P. Novakov :
Application No. 09/515,224 : ON PETITION
Filed: February 29, 2000 :
Attorney Docket No. 3 :

This is a decision on the petition, filed November 12, 2004, to revive the above-identified application under the provisions of 37 CFR 1.137(b).

The petition is **GRANTED**.

The above-identified application became abandoned for failure to reply in a timely manner to the non-final Office action mailed September 24, 2003, which set a shortened statutory period for reply of three (3) months. A Notice of Abandonment was mailed on June 15, 2004. In response, on November 12, 2004, the present petition was filed.

The application file is being forwarded to Technology Center Art Unit 2631 for consideration of the amendment filed November 12, 2004.

Telephone inquiries concerning this decision may be directed to the undersigned at (571) 272-3204. All other inquiries regarding this application should be directed to the Technology Center.

Sherry D. Brinkley

Sherry D. Brinkley
Petitions Examiner
Office of Petitions
Office of the Deputy Commissioner
for Patent Examination Policy

UNITED STATES PATENT AND TRADEMARK OFFICE

COMMISSIONER FOR PATENTS
UNITED STATES PATENT AND TRADEMARK OFFICE
P.O. BOX 1450
ALEXANDRIA, VA 22313-1450
www.uspto.gov

COPY MAILED

FEB 17 2005

OFFICE OF PETITIONS

LAW OFFICES OF NAREN CHAGANTI
432 S. CURSON AVE, STE. 12H
LOS ANGELES, CA 90036

In re Application of :
Emil P. Novakov :
Application No. 09/515,224 :
Filed: February 29, 2000 :
Attorney Docket No. 3 :

ON PETITION

COPY

This is a decision on the petition, filed November 12, 2004, to revive the above-identified application under the provisions of 37 CFR 1.137(b).

The petition is **GRANTED**.

The above-identified application became abandoned for failure to reply in a timely manner to the non-final Office action mailed September 24, 2003, which set a shortened statutory period for reply of three (3) months. A Notice of Abandonment was mailed on June 15, 2004. In response, on November 12, 2004, the present petition was filed.

The application file is being forwarded to Technology Center Art Unit 2631 for consideration of the amendment filed November 12, 2004.

Telephone inquiries concerning this decision may be directed to the undersigned at (571) 272-3204. All other inquiries regarding this application should be directed to the Technology Center.

Sherry D. Brinkley
Petitions Examiner
Office of Petitions
Office of the Deputy Commissioner
for Patent Examination Policy

UNITED STATES PATENT AND TRADEMARK OFFICE

Commissioner for Patents
United States Patent and Trademark Office
P.O. Box 1450
Alexandria, VA 22313-1450
www.uspto.gov

Lisa B. Kole
BAKER & BOTTS
30 Rockefeller Plaza
New York NY 10112

COPY MAILED

JAN 3 1 2008

OFFICE OF PETITIONS

In re Patent No. 7,229,822 :
Issue Date: June 12, 2007 :
Application No. 09/515,363 : ON PETITION
Filed: February 29, 2000 :
Attorney Docket No. A34614/070050.1690 :

This is a decision on the petition filed August 2, 2007, which is being treated as a request under 37 CFR 3.81(b)[1] to correct the name of the assignee on the front page of the above-identified patent by way of a Certificate of Correction.

The request is **GRANTED**.

Telephone inquiries concerning this decision may be directed to Carl Friedman at (571) 272-6842. Inquiries regarding the issuance of a certificate of correction should be directed to the Certificate of Correction Branch at (571) 272-4200.

The Certificates of Correction Branch will be notified of this decision granting the petition under 37 CFR 3.81(b) and directing issuance of the requested Certificate of Correction.

David Bucci
Petitions Examiner
Office of Petitions

[1] *See* MPEP 1309, subsection II; and Official Gazette of June 22, 2004.

UNITED STATES
PATENT AND
TRADEMARK OFFICE

UNDER SECRETARY F C MMERCE F R INTELLECTUAL PR PERTY
AND DIRECTOR OF THE UNITED STATES PATENT AND TRADEMARK OFFICE
WASHINGTON, D.C. 20231
WWW.USPTO.GOV

AUG 2 6 2002

#8

EXXON CHEMICAL COMPANY
P O BOX 2149
BAYTOWN TX 77522

In re Application of	:
Paul E. Burton	:
Serial No.: 09/515,428	: WITHDRAWAL OF ABANDONMENT
Filed: February 29, 2000	:
Attorney Docket No.: 2000B010	:

This is in response to applicant's petition under 37 CFR 1.181, filed February 15, 2002, requesting withdrawal of the holding of abandonment of the above identified application. The delay in responding to this petition is regretted.

A review of the file history shows that the Office mailed a Notice of Missing Parts to applicant on May 4, 2000, setting a two month period for reply. Upon failure to receive a reply a Notice of Abandonment was mailed to applicant on December 4, 2001. Applicant states that the missing parts were submitted to the Office on June 14, 2000, and received on June 19, 2000, as evidenced by the Office date stamped return postcard. These original papers have NOW been located and placed in the file. It is noted that the cover sheet contains an incorrect serial number which caused the papers to be misdirected. In view the timely reply the Notice of Abandonment mailed December 4, 2001, is considered to have been mailed in error and is hereby withdrawn.

Applicants' petition is **GRANTED**.

The application will be forwarded to OIPE for processing prior to being assigned to an examiner.

Should there be any questions with regard to this letter please contact William R. Dixon, Jr. by letter addressed to the Director, Technology Center 1600, Washington, DC 20231, or by telephone at (703) 308-3824 or by facsimile transmission at (703) 305-7230.

Bruce M. Kisliuk
Director, Technology Center 1600

Under the Paperwork Reduction Act of 1995, no persons are required to respond to a collection of information unless it displays valid OMB control number.

PETITION TO ACCEPT UNINTENTIONALLY DELAYED PAYMENT OF MAINTENANCE FEE IN AN EXPIRED PATENT (37 CFR 1.378(c))

Patent Number	Issue Date (YYYY-MM-DD)	Application Number	Filing Date (YYYY-MM-DD)	Docket Number (if applicable)
6,731,693	2004-05-04	09515538	2000-02-29	SKYI-07-002A

CAUTION: Maintenance fee (and surcharge, if any) payment must correctly identify: (1) the patent number and (2) the application number of the actual U.S. application leading to issuance of that patent to ensure the fee(s) is/are associated with the correct patent. 37 CFR 1.366(c) and (d).

SMALL ENTITY
☐ Patentee claims, or has previously claimed, small entity status. See 37 CFR 1.27.

LOSS OF ENTITLEMENT TO SMALL ENTITY STATUS
☐ Patentee is no longer entitled to small entity status. See 37 CFR 1.27(g)

NOT Small Entity		Small Entity	
Fee	Code	Fee	Code
◉ 3 ½ year	(1551)	○ 3 ½ year	(2551)
○ 7 ½ year	(1552)	○ 7 ½ year	(2552)
○ 11 ½ year	(1553)	○ 11 ½ year	(2553)

SURCHARGE
The surcharge required by 37 CFR 1.20(i)(2) (Fee Code 1558) must be paid as a condition of accepting unintentionally delayed payment of the maintenance fee.

MAINTENANCE FEE (37 CFR 1.20(e)-(g))
The appropriate maintenance fee must be submitted with this petition.

STATEMENT
THE UNDERSIGNED CERTIFIES THAT THE DELAY IN PAYMENT OF THE MAINTENANCE FEE TO THIS PATENT WAS UNINTENTIONAL

PETITIONER(S) REQUEST THAT THE DELAYED PAYMENT OF THE MAINTENANCE FEE BE ACCEPTED AND THE PATENT REINSTATED

THIS PORTION MUST BE COMPLETED BY THE SIGNATORY OR SIGNATORIES

37 CFR 1.378(d) states: "Any petition under this section must be signed by an attorney or agent registered to practice before the Patent and Trademark Office, or by the patentee, the assignee, or other party in interest."

I certify, in accordance with 37 CFR 1.4(d)(4) that I am

◉ An attorney or agent registered to practice before the Patent and Trademark Office

○ A sole patentee

○ A joint patentee; I certify that I am authorized to sign this submission on behalf of all the other patentees.

○ A joint patentee; all of whom are signing this e-petition

○ The assignee of record of the entire interest

Patent Practitioner			
A signature of the applicant or representative is required in accordance with 37 CFR 1.33 and 10.18. Please see 37 CFR 1.4(d) for the form of the signature			
Signature	/Andrew D. Fortney/	Date (YYYY-MM-DD)	2008-06-24
Name	Andrew D. Fortney	Registration Number	34600

This collection of information is required by 37 CFR 1.378(c). The information is required to obtain or retain a benefit by the public which is to file (and by the USPTO to process) an application. Confidentiality is governed by 35 U.S.C. 122 and 37 CFR 1.11 and 1.14. This collection is estimated to take 1 hour to complete, including gathering, preparing, and submitting the completed application form to the USPTO. Time will vary depending upon the individual case. Any comments on the amount of time you require to complete this form and/ or suggestions for reducing this burden, should be sent to the Chief Information Officer, U.S. Patent and Trademark Office, U.S. Department of Commerce, P.O. Box 1450, Alexandria, VA 22313-1450. DO NOT SEND FEES OR COMPLETED FORMS TO THIS ADDRESS. **This form can only be used when in conjunction with EFS-Web. If this form is mailed to the USPTO, it may cause delays in reinstating the patent.**

Privacy Act Statement

The Privacy Act of 1974 (P.L. 93-579) requires that you be given certain information in connection with your submission of the attached form related to a patent application or patent. Accordingly, pursuant to the requirements of the Act, please be advised that: (1) the general authority for the collection of this information is 35 U.S.C. 2(b)(2); (2) furnishing of the information solicited is voluntary; and (3) the principal purpose for which the information is used by the U.S. Patent and Trademark Office is to process and/or examine your submission related to a patent application or patent. If you do not furnish the requested information, the U.S. Patent and Trademark Office may not be able to process and/or examine your submission, which may result in termination of proceedings or abandonment of the application or expiration of the patent.

The information provided by you in this form will be subject to the following routine uses:

1. The information on this form will be treated confidentially to the extent allowed under the Freedom of Information Act (5 U.S.C. 552) and the Privacy Act (5 U.S.C. 552a). Records from this system of records may be disclosed to the Department of Justice to determine whether the Freedom of Information Act requires disclosure of these record s.

2. A record from this system of records may be disclosed, as a routine use, in the course of presenting evidence to a court, magistrate, or administrative tribunal, including disclosures to opposing counsel in the course of settlement negotiations.

3. A record in this system of records may be disclosed, as a routine use, to a Member of Congress submitting a request involving an individual, to whom the record pertains, when the individual has requested assistance from the Member with respect to the subject matter of the record.

4. A record in this system of records may be disclosed, as a routine use, to a contractor of the Agency having need for the information in order to perform a contract. Recipients of information shall be required to comply with the requirements of the Privacy Act of 1974, as amended, pursuant to 5 U.S.C. 552a(m).

5. A record related to an International Application filed under the Patent Cooperation Treaty in this system of records may be disclosed, as a routine use, to the International Bureau of the World Intellectual Property Organization, pursuant to the Patent Cooperation Treaty.

6. A record in this system of records may be disclosed, as a routine use, to another federal agency for purposes of National Security review (35 U.S.C. 181) and for review pursuant to the Atomic Energy Act (42 U.S.C. 218(c)).

7. A record from this system of records may be disclosed, as a routine use, to the Administrator, General Services, or his/her designee, during an inspection of records conducted by GSA as part of that agency's responsibility to recommend improvements in records management practices and programs, under authority of 44 U.S.C. 2904 and 2906. Such disclosure shall be made in accordance with the GSA regulations governing inspection of records for this purpose, and any other relevant (i.e., GSA or Commerce) directive. Such disclosure shall not be used to make determinations about individuals.

8. A record from this system of records may be disclosed, as a routine use, to the public after either publication of the application pursuant to 35 U.S.C. 122(b) or issuance of a patent pursuant to 35 U.S.C. 151. Further, a record may be disclosed, subject to the limitations of 37 CFR 1.14, as a routine use, to the public if the record was filed in an application which became abandoned or in which the proceedings were terminated and which application is referenced by either a published application, an application open to public inspections or an issued patent.

9. A record from this system of records may be disclosed, as a routine use, to a Federal, State, or local law enforcement agency, if the USPTO becomes aware of a violation or potential violation of law or regulation.

UNITED STATES PATENT AND TRADEMARK OFFICE

Commissioner for Patents
United States Patent and Trademark Office
P.O. Box 1450
Alexandria, VA 22313-1450
www.uspto.gov

In re Patent No. 6731693
Issue Date: May 4,2004
Application No. 09515538
Filed: February 29,2000
Attorney Docket No. 01827.0007.US00

:

:DECISION GRANTING PETITION
:UNDER 37 CFR 1.378(c)

:

This is a decision on the electronic petition, filed June 24,2008 ,under 37 CFR 1.378(c) to accept the unintentionally delayed payment of the 3.5 year maintenance fee for the above-identified patent.

The petition is GRANTED.

The maintenance fee is accepted, and the above-identified patent reinstated as of June 24,2008 . This decision also constitutes notice that the fee has been accepted. An electronic copy of the petition and this decision has been created as an entry in an Image File Wrapper. Nevertheless, petitioner should print and retain an independent copy

Telephone inquires related to this electronic decision should be directed to the Electronic Business Center at 1-866-217-9197.

UNITED STATES PATENT AND TRADEMARK OFFICE

COMMISSIONER FOR PATENTS
UNITED STATES PATENT AND TRADEMARK OFFICE
WASHINGTON, D.C. 20231
www.uspto.gov

Paper No. 9

BENEDICT GEORGE PACOCHA
333 N OAKLEY BLVD., #3SE
CHICAGO, IL 60612

COPY MAILED

MAY 28 2002

OFFICE OF PETITIONS

In re Application of :
Benedict George Pacocha :
Application No. 09/515,748 : ON PETITION
Filed: February 29, 2000 :
Attorney Docket No. :

This is a decision on the petition under 37 CFR 1.137(b), filed April 24, 2002, to revive the above-identified application.

The petition is **GRANTED**.

The above-identified application became abandoned for failure to reply in a timely manner to the Notice of Non-Compliant Amendment (37 CFR 1.121) mailed April 7, 2001. The Notice of Non-Compliant Amendment (37 CFR 1.121) set a period for reply of one (1) month or thirty (30) days (whichever is later) from the mail date of the Notice of Non-Compliant Amendment (37 CFR 1.121). No extensions of time under the provisions of 37 CFR 1.136(a) were obtained. Accordingly, the above-identified application became abandoned on May 8, 2001.

37 CFR 1.137(b)(3) requires a statement that the entire delay in filing the required reply from the due date for the reply until the filing of a grantable petition pursuant to 37 CFR 1.137(b) was unintentional. If the statement contained in the instant petition varies from the language required by 37 CFR 1.137(b)(3), the statement contained in the instant petition is being construed as the statement required by 37 CFR 1.137(b)(3) and petitioner must notify the Office if this is **not** a correct interpretation of the statement contained in the instant petition.

Telephone inquiries concerning this decision should be directed to Wan Laymon at (703) 305-9282.

The application file is being forwarded to Technology Center AU 1623.

Wan Laymon
Wan Laymon
Petitions Examiner
Office of Petitions
Office of the Deputy Commissioner
for Patent Examination Policy

UNITED STATES PATENT AND TRADEMARK OFFICE

Commissioner for Patents
United States Patent and Trademark Office
P.O. Box 1450
Alexandria, VA 22313-1450
www.uspto.gov

Paper 11

IBM CORPORATION
3039 CORNWALLIS RD.
DEPT. T81 / B503, PO BOX 12195
REASEARCH TRIANGLE PARK NC 27709

COPY MAILED

JUN 2 5 2004

OFFICE OF PETITIONS

In re Application of
Oliver Daude et al.
Application No. 09/515,780
Filed: February 29, 2000
Attorney Docket No.: FR9-99-001

DECISION ACCORDING STATUS
UNDER 37 CFR 1.47(a)

This is in response to the petition filed June 7, 2004, under 37 CFR 1.47(a).

The petition is **GRANTED**.

An oath or declaration executed by all named inventors was submitted upon filing the application however, the oath or declaration was rejected because it incorrectly identified the prior foreign application.

Petitioners have shown that after a diligent search, the non-signing inventor, Andrew Forth, cannot be located. Specifically, the affidavit of Patent Agent Francis Lammes outlines the efforts employed to locate a viable address for Mr. Forth since the letter sent to Mr. Forth at the last known address was returned undeliverable by the Royal Mail and no forwarding address has been provided. Copies of email inquiries to determine a more viable address as well as internet search records was submitted as proof that Mr. Forth could not be located and the proof submitted substantiates the claim that while diligent efforts have been made, joint inventor Andrew Forth cannot be located.

The above-identified application and papers have been reviewed and found in compliance with 37 CFR 1.47(a). This application is hereby accorded Rule 1.47(a) status.

As provided in Rule 1.47(c), this Office will forward notice of this application's filing to the non-signing inventor at the address given in the declaration. Notice of the filing of this application will also be published in the Official Gazette.

A petition fee in the amount of $130.00 is required for a petition under 37 CFR 1.47(a) and thus, pursuant to the authorization in the petition, has been charged to deposit account no. 09-0461.

The application is being forwarded to Technology Center 1743 for continued examination in due course.

Telephone inquiries concerning this matter should be directed to the undersigned Petitions Attorney at (703) 305-4497.

Patricia Faison-Ball
Senior Petitions Attorney
Office of Petitions

UNITED STATES PATENT AND TRADEMARK OFFICE

Commissioner for Patents
United States Patent and Trademark Office
P.O. Box 1450
Alexandria, VA 22313-1450
www.uspto.gov

DANIEL N. CHRISTUS
227 WEST MONROE STREET
CHICAGO, IL 60606-5096

COPY MAILED

NOV 19 2007

OFFICE OF PETITIONS

In re Patent No. 6,305,621 :
Issue Date: October 23, 2001 :
Application No. 09/516,076 : ON PETITION
Filed: March 1, 2000 :
Attorney Docket No. TASKFOR-11 :

This is a decision on the petition under 37 CFR 1.378(c), filed May 14, 2007, to accept the delayed payment of a maintenance fee for the above-identified patent.

The petition is **DISMISSED**.

A petition to accept the unintentionally delayed payment of a maintenance fee under 35 U.S.C. 41(c) and 37 CFR 1.378(c) must be accompanied by: (1) a statement that the delay was unintentional; (2) payment of the appropriate maintenance fee, unless previously submitted; (3) payment of the surcharge set forth in 37 CFR 1.20(i)(2). This petition lacks item (2) above.

A review of the record shows that the petitioner is not authorized to charge the deposit account. Therefore the petition must be dismissed.

Any petition for reconsideration of this decision must be accompanied by the **petition fee of $400** as set forth in 37 CFR 1.17(f). The petition for reconsideration must include the lacking item(s) noted below, since, after a decision on the petition for reconsideration, no further reconsideration or review of the matter will be undertaken by the Director.

To satisfy the requirement of 37 CFR 1.138(c) the petitioner must submit (1) the reply in the form of payment of the maintenance fee of $450 and the surcharge of $1640, (2) and the renewed petition fee of $400. A renewed petition cannot be considered until the outstanding balance of $2490 is paid.

If reconsideration of this decision is desired, a petition for reconsideration under 37 CFR 1.378(e) must be filed within **TWO (2) MONTHS** from the mail date of this decision. No extension of this two-month time limit can be granted under 37 CFR 1.136(a) or (b). This is **not** a final agency action within the meaning of 5 U.S.C. § 704.

It is not apparent whether the person signing the statement of unintentional delay was in a position to have firsthand or direct knowledge of the facts and circumstances of the delay at issue. Nevertheless, such statement is being treated as having been made as the result of a reasonable inquiry into the facts and circumstances of such delay. In the event that such an inquiry has not been made, petitioner must make such an inquiry. If such inquiry results in the discovery that the delay in paying the maintenance fee under 37 CFR 1.378(c) was intentional, petitioner must notify the Office.

Petitioner will not receive future correspondence related to maintenance fees for the patent unless a "Fee Address" Indication Form (see PTO/SB/47) and Request for Customer Number (see PTO/SB/125) are submitted.

Further correspondence with respect to this matter should be addressed as follows:

By Mail: Mail Stop PETITION
Commissioner for Patents
Post Office Box 1450
Alexandria, VA 22313-1450

By hand: U. S. Patent and Trademark Office
Customer Service Window, Mail Stop Petitions
Randolph Building
401 Dulany Street
Alexandria, VA 22314

The centralized facsimile number is (571) 273-8300.

Telephone inquiries should be directed to Diane Goodwyn at (703) 571-272-6735.

April Wise
Petitions Examiner
Office of Petitions

UNITED STATES PATENT AND TRADEMARK OFFICE

Commissioner for Patents
United States Patent and Trademark Office
P.O. Box 1450
Alexandria, VA 22313-1450
www.uspto.gov

LATHROP & CLARK LLP
740 REGENT STREET SUITE 400
P.O. BOX 1507
MADISON WI 53701-1507

COPY MAILED

MAR 1 3 2008

OFFICE OF PETITIONS

In re Patent No. 6,305,621	:	
Issue Date: October 23, 2001	:	
Application No. 09/516,076	:	ON PETITION
Filed: March 1, 2000	:	
Attorney Docket No. TASKFOR-11	:	

This is a corrected decision on the petition under 37 CFR 1.378(c), filed May 14, 2007, to accept the unintentionally delayed payment of a maintenance fee for the above-identified patent. Consequently, the decision mailed November 19, 2007 is hereby **vacated.**

The petition is **GRANTED**.

This patent expired on October 23, 2005 for failure to pay the 3-½ year maintenance fee. Since this petition was submitted within twenty-four months after the six-month grace period provided in 37 CFR 1.362 (e), the petition was timely filed under the provisions of 37 CFR 1.378(c).

There is no indication that the person signing the instant petition was ever given a power of attorney or authorization of agent to prosecute the above-identified application. In accordance with 37 CFR 1.34(a), the signature appearing on the petition shall constitute a representation to the United States Patent and Trademark Office that he/she is authorized to represent the particular party in whose behalf he/she acts. However, if petitioner desires to receive future correspondence regarding this application, the appropriate power of attorney or authorization of agent must be submitted. A courtesy copy of this decision is being mailed to petitioner. Nevertheless, all future correspondence regarding this application file will be directed solely to the address of record until otherwise instructed.

It is not apparent whether the statement of unintentional delay was signed by a person who would have been in a position of knowing that the entire delay in filing the required reply from the due date for the reply until the filing of a grantable petition pursuant to 37 CFR 1.378(c) was unintentional. Nevertheless, in accordance with 37 CFR 10.18, the statement is accepted as constituting a certification of unintentional delay. However, in the event that petitioner has no knowledge that the delay was unintentional, petitioner must make such an inquiry to ascertain that, in fact, the delay was unintentional. If petitioner discovers that the delay was intentional, petitioner must so notify the Office.

The maintenance fee is hereby accepted and the above-identified patent is reinstated as of the mail date of this decision.

In view of this decision, the renewed petition filed January 18, 2008 is dismissed as moot.

There was no $400 petition fee charged to petitioner's deposit account and nor is one due.

Telephone inquiries concerning this decision should be directed to Diane Goodwyn at (571) 272-6735.

The patent file is being forwarded to Files Repository.

April M. Wise
Petitions Examiner
Office of Petitions

cc: DANIEL CHRISTUS
MCDERMOTT, WILL & EMERY, LLP
227 WEST MONROE STREET
54TH FLOOR
CHICAGO, IL 60606-5096

UNITED STATES PATENT AND TRADEMARK OFFICE

COMMISSIONER FOR PATENTS
UNITED STATES PATENT AND TRADEMARK OFFICE
WASHINGTON, D.C. 20231
www.uspto.gov
AMB 06-02

Paper No. 8

CHARLES A. CREHORE
ULMER & BERNE, LLP
1300 EAST NINTH STREET
SUITE 900
CLEVELAND, OH 44114

COPY MAILED

JUN 17 2002

OFFICE OF PETITIONS

In re Application of :
Hertelendy, et al. :
Application No. 09/516,078 : PETITION
Filed: March 1, 2000 :
Attorney Docket No.: 45061-8 :
For: UROGENTIAL OR ANORECTAL :
TRANSMUCOSAL VACCINE DELIVERY :
SYSTEM :

This is a decision on the petition under 37 CFR 1.181 to withdraw the holding of abandonment, filed May 24, 2001.

The petition to withdraw the holding of abandonment is **GRANTED**.

This application was held abandoned July 12, 2001 for failure to timely reply to the non-final Office action. The non-final Office action set a three (3) month shortened statutory period of time for reply. Notice of Abandonment was mailed March 27, 2002.

Petitioner asserts that a petition for an extension and an amendment were timely filed October 11, 2001. Petitioner has provided a copy of the response originally filed which bears a certificate of mailing date of October 11, 2001.

The response submitted October 11, 2001 has not been located in the Office, however, in view of the evidence submitted, the response is deemed timely.

The Notice of Abandonment is hereby vacated and the holding of abandonment is withdrawn.

The application file is being forwarded to Technology Center 1600 for further processing.

Telephone inquiries concerning this matter may be directed to the undersigned at (703) 305-0310.

Alesia M. Brown
Petitions Attorney
Office of Petitions
Office of the Deputy Commissioner
for Patent Examination Policy

UNITED STATES PATENT AND TRADEMARK OFFICE

COMMISSIONER FOR PATENTS
UNITED STATES PATENT AND TRADEMARK OFFICE
P.O. BOX 1450
ALEXANDRIA, VA 22313-1450
www.uspto.gov

Fletcher Yoder
P. O. Box 692289
Houston, TX 77269-2289

COPY MAILED

FEB 1 1 2005

OFFICE OF PETITIONS

In re Patent No. 6,747,345	:	
Issue Date: June 8, 2004	:	
Application No. 09/516,080	:	ON PETITION
Filed: March 1, 2000	:	
Attorney Docket No. MICS:0043/FLE 99-0634	:	

This is a decision on the petition filed December 13, 2004, which is being treated as a request under 37 CFR 3.81(b) to correct the name of the assignee on the front page of the above-identified patent by way of a Certificate of Correction.

The petition is granted.

The file is being forwarded to the Certificates of Correction Branch for issuance of the requested Certificate of Correction.

Telephone inquiries concerning this decision may be directed to the undersigned at (571) 272-3223. Inquiries regarding the issuance of a certificate of correction should be directed to the Certificate of Correction Branch at (703) 305-8309.

Marianne E. Jenkins
Petitions Examiner
Office of Petitions
Office of the Deputy Commissioner
for Patent Examination Policy

UNITED STATES PATENT AND TRADEMARK OFFICE

Commissioner for Patents
United States Patent and Trademark Office
P.O. Box 1450
Alexandria, VA 22313-1450
www.uspto.gov

September 2004

COOK, ALEX, McFARRON, MANZO,
CUMMINGS & MEHLER, LTD.
200 West Adams St., Suite 2850
Chicago, IL 60606

MAILED

SEP 02 2004

In re Application of:
Satoshi Murakami et al.
Serial No.: 09/516,082
Filed: March 1, 2000
Attorney Docket No.: 0553-0163

DECISION ACCEPTING PAPERS

This is a decision on the petition filed on July 7, 2004 under 37 C.F.R. § 1.137(a) for revival of an application for patent abandoned unavoidably. It is being treated as a request to accept papers.

The request is **GRANTED**.

At the time this request was filed, application records merely showed that a final rejection was mailed on December 3, 2003 with no response from applicant until the present request was filed on July 7, 2004. Requester asserts that a response (an RCE; an amendment; and an IDS) was filed on February 6, 2004 except that the last two digits of the application's serial num ber were transposed. Specifically, the application's serial number was listed as 09/516,028 when it should have been listed as 09/516,082. To support this assertion, requester has submitted a copy of the response and a copy of a return postcard which identifies and acknowledges receipt of the response by the Patent and Trademark Office (PTO) on February 6, 2004.

Although the serial number of the application is transposed from 09/516,082 to 09/516,028 on both the response and on the postcard, the other information such as the filing date and the first named inventor's name is correct. Thus, t he transposed application serial number is considered a minor error that could have been quickly discovered. See M.P.E.P. § 502.

A review of application records reveals that the above-identified response having been acknowledged as being received in the PTO on February 6, 2004 was in fact received and associated with Serial Number 09/516,028. The response included a Certificate of Mailing dated February 3, 2004. Thus, the response was timely filed in accordance with the provisions of 37 C.F.R. § 1.8(a).

For the above stated reasons, the request is granted. The response of February 6, 2004 as well as the payment of the fees (a check in the amount of $1,958.00) associated with the

response have now been disassociated from application serial number 09/516,028 and associated with application serial number 09/516,082.

The response will be processed by the Technology Center 2800 support staff and the examiner will prepare an Office action based upon the response.

Any inquiries regarding this decision should be directed to Edward Westin at (571) 272-1638.

James Dwyer, Director
Technology Center 2800
Semiconductors, Electrical and Optical
Systems and Components

UNITED STATES PATENT AND TRADEMARK OFFICE

Commissioner for Patents
United States Patent and Trademark Office
P.O. Box 1450
Alexandria, VA 22313-1450
www.uspto.gov

September 2004

COOK, ALEX, McFARRON, MANZO,
CUMMINGS & MEHLER, LTD.
200 West Adams St., Suite 2850
Chicago, IL 60606

SEP - 2 2004

In re Application of:
Satoshi Murakami et al.
Serial No.: 09/516,082
Filed: March 1, 2000
Attorney Docket No.: 0553-0163

DECISION ACCEPTING PAPERS

This is a decision on the petition filed on July 7, 2004 under 37 C.F.R. § 1.137(a) for revival of an application for patent abandoned unavoidably. It is being treated as a request to accept papers.

The request is **GRANTED**.

At the time this request was filed, application records merely showed that a final rejection was mailed on December 3, 2003 with no response from applicant until the present request was filed on July 7, 2004. Requester asserts that a response (an RCE; an amendment; and an IDS) was filed on February 6, 2004 except that the last two digits of the application's serial number were transposed. Specifically, the application's serial number was listed as 09/516,028 when it should have been listed as 09/516,082. To support this assertion, requester has submitted a copy of the response and a copy of a return postcard which identifies and acknowledges receipt of the response by the Patent and Trademark Office (PTO) on February 6, 2004.

Although the serial number of the application is transposed from 09/516,082 to 09/516,028 on both the response and on the postcard, the other information such as the filing date and the first named inventor's name is correct. Thus, the transposed application serial number is considered a minor error that could have been quickly discovered. See M.P.E.P. § 502.

A review of application records reveals that the above-identified response having been acknowledged as being received in the PTO on February 6, 2004 was in fact received and associated with Serial Number 09/516,028. The response included a Certificate of Mailing dated February 3, 2004. Thus, the response was timely filed in accordance with the provisions of 37 C.F.R. § 1.8(a).

For the above stated reasons, the request is granted. The response of February 6, 2004 as well as the payment of the fees (a check in the amount of $1,958.00) associated with the

response have now been disassociated from application serial number 09/516,028 and associated with application serial number 09/516,082.

The response will be processed by the Technology Center 2800 support staff and the examiner will prepare an Office action based upon the response.

Any inquiries regarding this decision should be directed to Edward Westin at (571) 272-1638.

James Dwyer, Director
Technology Center 2800
Semiconductors, Electrical and Optical
Systems and Components

UNITED STATES PATENT AND TRADEMARK OFFICE

Commissioner for Patents
United States Patent and Trademark Office
P.O. Box 1450
Alexandria, VA 22313-1450
www.uspto.gov

COOK ALEX MCFARRON MANZO
CUMMINGS & MEHLER LTD
200 WEST ADAMS ST
SUITE 2850
CHICAGO IL 60606

COPY MAILED
AUG 2 5 2008

In re Application of	:	
Satoshi Murakami et al	:	
Application No. 09/516,082	:	DECISION GRANTING PETITION
Filed: March 1, 2000	:	UNDER 37 CFR 1.313(c)(2)
Attorney Docket No. SEL163	:	

This is a decision on the petition under 37 CFR 1.313(c)(2), filed August 22, 2008, to withdraw the above-identified application from issue after payment of the issue fee.

The petition is **GRANTED**.

The above-identified application is withdrawn from issue for consideration of a submission under 37 CFR 1.114 (request for continued examination). *See* 37 CFR 1.313(c)(2).

Petitioner is advised that the issue fee paid on July 18, 2008 cannot be refunded. If, however, this application is again allowed, petitioner may request that it be applied towards the issue fee required by the new Notice of Allowance.[1]

Telephone inquiries should be directed to the undersigned at (571) 272-3208.

This application is being referred to Technology Center AU 2815 for processing of the request for continued examination under 37 CFR 1.114 and for consideration of the concurrently filed IDS and amendment.

Karen Creasy

Karen Creasy
Petitions Examiner
Office of Petitions

---

[1] *The request to apply the issue fee to the new Notice may be satisfied by completing and returning the new Part B – Fee(s) Transmittal Form (along with any balance due at the time of submission). Petitioner is advised that the Issue Fee Transmittal Form must be completed and timely submitted to avoid abandonment of the application.*

UNITED STATES PATENT AND TRADEMARK OFFICE

Commissioner for Patents
United States Patent and Trademark Office
P.O. Box 1450
Alexandria, VA 22313-1450
www.uspto.gov

COOK ALEX MCFARRON MANZO
CUMMINGS & MEHLER LTD
200 WEST ADAMS ST, SUITE 2850
CHICAGO, IL 60606

MAILED

FEB 06 2009

OFFICE OF PETITIONS
ON PETITION

In re Application of
Satoshi Murakami et al
Application No. 09/516,082
Filed: March 1, 2000
Attorney Docket No. SEL163

This is a decision on the petition, filed February 5, 2009 under 37 CFR 1.313(c)(2) to withdraw the above-identified application from issue after payment of the issue fee.

The petition is **GRANTED**.

The above-identified application is withdrawn from issue for consideration of a submission under 37 CFR 1.114 (request for continued examination). See 37 CFR 1.313(c)(2).

Petitioner is advised that the issue fee paid on January 2, 2009 in the above-identified application cannot be refunded. If, however, the above-identified application is again allowed, petitioner may request that it be applied towards the issue fee required by the new Notice of Allowance.[1]

Telephone inquiries should be directed to Irvin Dingle at (571) 272-3210.

This matter is being referred to Technology Center AU 2815 for processing of the request for continued examination under 37 CFR 1.114 and for consideration of the concurrently filed Information Disclosure Statement.

/Irvin Dingle/
Irvin Dingle
Petitions Examiner
Office of Petitions

---

[1] The request to apply the issue fee to the new Notice may be satisfied by completing and returning the new Issue Fee Transmittal Form PTOL-85(b), which includes the following language thereon: Commissioner for Patents is requested to apply the Issue Fee and Publication Fee (if any) or re-apply any previously paid issue fee to the application identified above. Petitioner is advised that, whether a fee is indicated as being due or not, the Issue Fee Transmittal Form **must** be completed and timely submitted to avoid abandonment. Note the language in bold text on the first page of the Notice of Allowance and Fee(s) Due (PTOL-85).

UNITED STATES PATENT AND TRADEMARK OFFICE

COMMISSIONER FOR PATENTS
UNITED STATES PATENT AND TRADEMARK OFFICE
P.O. BOX 1450
ALEXANDRIA, VA 22313-1450
www.uspto.gov

VERIZON CORPORATE SERVICES GROUP INC.
C/O CHRISTIAN R. ANDERSEN
600 HIDDEN RIDGE DRIVE
MAILCODE HQEO3H14
IRVING, TX 75038

COPY MAILED

FEB 0 2 2006

OFFICE OF PETITIONS

In re Application of	:	
Walter Wesley Howe	:	
Application No. 09/516,090	:	ON PETITION
Filed: March 1, 2000	:	
Attorney Docket No. 99-003	:	

This is a decision on the petition under 37 CFR 1.137(b), filed by facsimile transmission on April 29, 2005, to revive the above-identified application.

The application became abandoned for failure to timely respond to the Notice of Allowance and Fee(s) Due mailed on January 28, 2005.

The petition satisfies the requirements of 37 CFR 1.137(b) in that petitioner has supplied (1) the reply in the form of $1,400 for payment of the issue fee; (2) the petition fee of $1,500; and (3) an adequate statement of unintentional delay. Therefore, the petition is **GRANTED**.

This application is being referred to the Publishing Division to be processed into a patent.

Telephone inquiries concerning this decision should be directed to the undersigned at (571) 272-3226.

Andrea Smith
Petitions Examiner
Office of Petitions

UNITED STATES
PATENT AND
TRADEMARK OFFICE

Under Secretary of Commerce for Intellectual Property and
Director of the United States Patent and Trademark Office
Washington, DC 20231
www.USPTO.gov

Paper No. 5

Jay L. Chaskin
General Electric Company
3135 Easton Turnpike
Fairfield, CT 06431

COPY MAILED

NOV 1 5 2001

OFFICE OF PETITIONS

In re Application of
Vladislav Boutenko
Application No. 09/516,122
Filed: March 1, 2000
Attorney Docket No. 14XZ00060

ON PETITION

This is a decision on the petition under 37 CFR 1.137(b), filed October 1, 2001, to revive the above-identified application.

The petition is **GRANTED**.

The above-identified application became abandoned for failure to reply in a timely manner to the Notice to File Missing Parts of Application (Notice) mailed April 26, 2000. The Notice set a period for reply of two (2) months from the mail date of the Notice. No extensions of time under the provisions of 37 CFR 1.136(a) were obtained. Accordingly, the above-identified application became abandoned after midnight June 26, 2000.

Finance records indicate that the Office charged the petition fee based on the new fee increase. Petitioner should note, that effective October 1, 2001, unintentional petition to revive fees were increased from $1240.00 to $1280.00. However, since a certificate of mailing dated September 26, 2001, accompanied the petition filed October 1, 2001, the difference of $40.00 will be refunded to petitioner's deposit account.

The application file is being forwarded to the Office of Initial Examination Unit for further processing.

Telephone inquiries concerning this decision should be directed to Andrea Coram at (703) 308-6711.

Andrea Coram
Petitions Examiner
Office of Petitions
Office of the Deputy Commissioner
for Patent Examination Policy

UNITED STATES PATENT AND TRADEMARK OFFICE

Commissioner for Patents
United States Patent and Trademark Office
P.O. Box 1450
Alexandria, VA 22313-1450
www.uspto.gov

COPY MAILED

AUG 0 4 2006

OFFICE OF PETITIONS

Jay L Chaskin
Cantor Colburn LLP
55 Griffin Road South
Bloomfield CT 06002

Paper No. 13

In re Application of
Vladislav Boutenko et al.
Application No. 09/516,122
Attorney Docket No. 14XZ00060

ON PETITION

This is a decision on the petition under 37 CFR 1.137(b), filed June 22, 2006, to revive the above-identified application.

The petition is **GRANTED**

The above-identified application became abandoned for failure to reply in a timely manner to the non-final Office action mailed February 27, 2002, which set a shortened statutory period for reply of three (3) months. No extensions of time under the provisions of 37 CFR 1.136(a) were obtained. Accordingly, the above-identified application became abandoned on May 28, 2002.

The petition satisfies the conditions for revival pursuant to the provisions of 37 CFR 1.137(b) in that (1) the reply in the form of an amendment; (2) the petition fee of $1500; and (3) the required statement of unintentional delay have been received. Accordingly, the reply to the non-final Office action of February 27, 2002 is accepted as having been unintentionally delayed.

Telephone inquiries concerning this decision should be directed to Mikhail Kornakov at (571) 272-1303 or in his absence, the undersigned at (571) 272-7099.

The application file is being referred to Technology Center AU 2882 for appropriate action on the concurrently filed amendment.

David A. Bucci
Petitions Examiner
Office of Petitions

UNITED STATES
PATENT AND
TRADEMARK OFFICE

UNDER SECRETARY OF COMMERCE FOR INTELLECTUAL PROPERTY
AND DIRECTOR OF THE UNITED STATES PATENT AND TRADEMARK OFFICE
WASHINGTON, D.C. 20231
WWW.USPTO.GOV

OCT 18 2002

Edward D. Grieff
Hale & Dorr, LLP
1455 Pennsylvania Ave., NW
Washington, D.C, 20004

Paper No. 16

In re Application of:	:	
Garvey et al	:	
Serial No.: 09/516,194	:	PETITION DECISION
Filing Date: March 1, 2000	:	
Attorney's Docket No.: 102258.285	:	

This is in response to "Petition from Restriction Requirement under 37 CFR 1.144" filed April 18, 2002, requesting the rejoinder and consideration of the additional species in pending claims 1-8, 10-17, 19-31, 33-40 and 104-106.

BACKGROUND

On May 8, 2001, the examiner made a restriction requirement to claims 1-115 and requested applicant to elect a single disclosed species. The restriction is as follows:

Group I, claims 1-9, compounds of Formula I
Group II, claims 10-115, composition comprising compounds of Formula I

The examiner stated that Groups I and II are related as product and process of use. Further, the examiner stated that in the instant case the compound may be used alone (I) or in combination (II). In addition, the examiner indicated that claims 1-4 and 10 are generic to polarity of disclosed patentably distinct species comprising , the compound, composition and method of use. The examiner required an election of a single disclosed compound, composition, and method of use.

Applicant replied by electing Group II, comprising a compound of Formula I and a vasoactive agent. Applicant traversed the election of species requirement and

provisionally elected nitrosated prostaglandins, Example 11, and presenting a structural formula thereof (i.e. prostaglandins containing at least one $-NO_2$ group); and phentolamine as the species for the vasoactive agent. Applicant argued that the claims are directed to compounds and composition comprising prostaglandins, methods of use of the composition and kits for the composition. Applicant urged that if the compositions were allowable, then all the compounds of Formula I in those compositions would also be allowable. In addition, applicant argued that a search of the prior art for the compositions of Group II will also be the same prior art for the compounds of Formula I, i.e., Group I. Furthermore, applicant directed the examiner's attention to the search report of the corresponding PCT application. The examiner examined all the claims together and that all claims were found to be Novel, Inventive, and have Industrial Applicability.

On July 24, 2001, an Office action was mailed. The examiner accepted the election. The examiner indicated that applicant timely traversed the restriction (election) requirement. The compound, composition, method of treating sexual dysfunction and kit claims were examined to the extent they read on the elected prostaglandin nitrate containing esters. Claims 1, 9, 18, 32, 41-103, and 107-115 are withdrawn from further consideration as drawn to non elected inventions, there being no allowable generic or linking claim. Claim 1 was rejected under 35 USC 112, 2nd paragraph, and claims 2-8, 10-17, 19-31, 33-40, and 104-106 were objected to as being directed to a misjoinder of inventions. The examiner indicted that claims limited to the elected invention would be allowable.

On October 24, 2001, applicants requested examination of other species that fell within the scope of the compound of Formula I pursuant to MPEP 803.02.

On January 22, 2002, a final Office action was mailed. Claim 1 was withdrawn from further consideration. Claims 2-8, 10-17, 19-31, 33-40, and 104-106 remained objected to as being directed to a misjoinder.

On April 18, 2002, the present petition was filed, requesting reconsideration and reversal of the examiner's decision.

DISCUSSION

Applicants argue that the examiner failed to consider nitro and nitroso substituted PGs that fall within the scope of the compound of Formula I. Applicants argue that the pending claims are all directed to the same invention. Claim 2 recites compounds of Formula I that are nitrosated prostaglandins (contain a $-NO_2$ group); nitrosylated prostaglandins (contain a –NO group); and nitrosated and nitrosylated prostaglandins (contain a - NO_2 group and a –NO group). Applicants argue that the examiner is required to consider the compounds of Formula I to the extend they cover nitrosated and nitrosylated prostaglandins (prostaglandins that contain a - NO_2 group and a –NO group). Applicants argue that it is unfair for the examiner to refuse to consider compounds that contain both a - NO_2 group and a –NO group, or compounds that contain a

-NO group. Applicants rely on MPEP 803.02 for their position. Applicants argue that the examiner's refusal to examine the additional species in claims 1-8, 10-17, 19-31, 33-40, and 104-106 in the pending application is improper.

The file history has been carefully reviewed. It appears that the examiner considered applicant's traversal and combined compound (prostaglandin nitrate containing esters), composition, and method of treating sexual dysfunction together for examination. However, the examiner did not outline the revised restriction.

Claims restricted to different species must be mutually exclusive. In making a requirement for restriction in an application claiming plural species, the examiner should group together species considered clearly unpatenatble over each other. Election of species should not be required if the species claimed are considered clearly unpatentable (obvious) over each other. In the instant case, the examiner failed to identify the mutually exclusive species. Further, prostaglandins containing $-NO_2$ group do not necessarily exclude PGs containing –NO group, or vise versa. In the instant application in which no species claims are presented and a generic claim recites such a multiplicity of species that an unduly extensive and burdensome search is required, the examiner properly required for an election of species prior to the search of the generic claim. However, the examination should have been extended the examination to determine patentability of the generic claim after indication of the allowability of the elected species.

In view of the above discussion, the examiner should have extended the search and examination after indication of the elected species is allowable.

DECISION

Applicants' petition is GRANTED.

The application will be forwarded to the examiner for consideration of applicants' reply to the last Office action following mailing of this decision.

Should there be any question with respect to this decision, please contact Cecilia Tsang, by mail addressed to: Director, Technology Center 1600, Washington, D.C. 20231, or by telephone at (703) 308-0254 or by facsimile transmission at (703) 308-3890.

Bruce M. Kisliuk
Director, Technology Center 1600

UNITED STATES PATENT AND TRADEMARK OFFICE

Commissioner for Patents
United States Patent and Trademark Office
P.O. Box 1450
Alexandria, VA 22313-1450
www.uspto.gov

JUL 13 2005

EDWARD D. GRIEFF
HALE & DORR, LLP
1435 PENNSYLVANIA AVENUE, NW
WASHINGTON, DC 20004

In re Application of	:
Gordon L. Letts et al	:
Serial No.: 09/516,194	: PETITION DECISION
Filed: March 1, 2000	:
Attorney Docket No.: 102258.285	:

This is in response to the petition under 37 CFR 1.144, filed April 11, 2005, requesting withdrawal of an improper restriction requirement.

BACKGROUND

A review of the file history shows that this application was filed under 35 U.S.C. 111 on October 5, 2001, and contained claims 1-115. In a first Office action, mailed May 8, 2001, a first examiner set forth a restriction requirement, as follows:

Group I – claims 1-9, drawn to compounds; and
Group II – claims 10-115, drawn to compositions.

In addition, applicants were required to elect a species from whichever group was elected.

Applicants replied on June 8, 2001, electing Group II, with traverse, and the species identified by Example 11 on page 52 of the specification.

The examiner mailed a new Office action to applicants on July 24, 2001, in which, claims 1, 9, 18, 32, 41-103 and 107-115 were withdrawn from consideration as reading on non-elected inventions. Claim 1 was rejected under 35 U.S.C. 112, second paragraph as indefinite. Claims 2-8, 10-17, 19-31, 33-40 and 104-106 were objected to as being directed to misjoinder of inventions, but would be allowable if limited to the elected invention defined by the examiner.

Applicants replied on October 24, 2001, amending claims 1-8, 10-17, 19-31, 33-40 and 104-106 and canceling all other claims. The restriction requirement continued to be revised and all other rejections addressed.

The examiner mailed a Final Office action to applicants on January 22, 2002, responding to the traversal by stating that the claims would be examined to the extent they read on the elected invention, withdrawing claim 1 as drawn to a non-elected invention and objecting to all other claims as directed to a misjoinder of nitro and nitroso compounds. Applicants filed a reply and a Notice of Appeal on July 22, 2002.

Applicants filed a petition from the examiner's restriction on April 18, 2002. A decision granting the petition and returning the application to the examiner for further action on all of the claims was rendered on October 18, 2002. The examiner mailed an Advisory Action on January 20, 2003, denying entry of the amendment of July 22, 2002.

In response to a Notice withdrawing the finality of the Office action of January 22, 2002, mailed February 21, 2003, applicants submitted a new amendment of the claims on February 25, 2003. The amendment was deemed to not be in proper form by letter mailed August 29, 2003, and applicants provided a corrected amendment on September 5, 2003. The examiner mailed a non-Final Office action to applicants on November 25, 2003, rejecting claim 2 under 35 U.S.C. 102(b) as anticipated by Morozowich. Claims 2, 4-8, 14-17 and 107 were rejected under 35 U.S.C. 103(a) as unpatentable over Bezuglov or Del Soldato in view of Garvey (437 or 863) or Bandarage. Claim 107 was rejected under 35 U.S.C. 112, first paragraph as lacking enablement.

Applicants replied on February 24, 2004, by amending claims 2, 3 and 107 and responding to the rejections of record.

Due to retirement of the first examiner a new examiner was assigned the application for further prosecution. The new examiner in an Office action mailed August 16, 2004, set forth a 44 way restriction requirement which is not repeated herein and required an election of species from which ever group was elected.

Applicants replied with a vigorous traverse of the requirement, electing Group II and the same species as before. Applicants suggested that the claims could properly be divided into only four groups, as follows:

Groups I-XI – claims 1-2 and 116, drawn to compounds of formula I;
Groups XII-XXII – claims 4, 10-13, 19-27 and 33-36, drawn to compositions utilizing the compounds of Formula I;
Groups XXIII-XXXIII – claims 5-8, 14-17, 28-31 and 37-40, drawn to methods of use of the compounds of Formula I; and
Groups XXIV-XLIV – claims 104-106, drawn to a kit comprising the compounds of Formula I.

Applicants noted that all of these claims were examined by the previous examiner following the previous petition decision and should all continued to be examined now.

The examiner mailed a non-Final Office action to applicants on January 13, 2005, maintaining the restriction requirement due to undue burden on the Office, but indicating that process claims of the same scope as allowed product claims would be rejoined and fully examined upon

allowance of a product claim. Claim 116 was rejected under 35 U.S.C. 112, first paragraph, as lacking enablement. Claims 2-3 were rejected under 35 U.S.C. 112, second paragraph, as indefinite. Claim 2 was rejected under 35 U.S.C. 103(a) as unpatentable over Del Soldato. The elected species was indicated as allowable.

Applicants replied on April 11, 2005, by amending the specification in several places, amending claims 2 and 23 and adding claim 117. The rejections were addressed appropriately and the restriction requirement again traversed by filing of the instant petition. (It is noted that the amendment was found to be non-compliant and applicants so notified and a compliant amendment was filed on May 4, 2005.

DISCUSSION

The initial restriction requirement was traversed by applicants. The examiner proceeded with examination of the claims based on an election of species. The first petition was directed to the examiner's action in examining only a portion of the claims related to the elected species rather than following the guidelines of M.P.E.P. 803.02. The petition was granted on the claims remaining in the application, significantly less than the number originally filed. Following the petition decision the first examiner mailed a new non-Final action on the merits of the claims with the claims now being rejected over art. Applicants' reply was then considered by a second examiner who made a new restriction requirement. It is this requirement that is the subject of this petition.

The new examiner based the requirement for restriction on formula I:

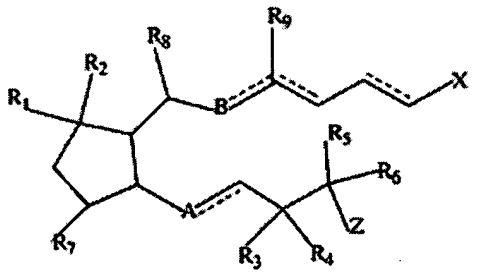

(I)

Formula I represents a basic prostaglandin structure with the variables being defined in Claim 2. The structure further requires the presence of a nitro or nitroso group.

An analysis of the claims pending shows that they may be divided into four general categories, compounds, compositions based on the compounds, methods of treatment using the compositions and kits containing the compounds. Within the compounds encompassed by formula I (claims 2, 3 and 116) the examiner found 10 separate patentably distinct compounds based on the differences in variables R_1 and R_2 taken together or separately, Z and X. An eleventh group was also set forth which encompassed any compounds not covered by the first ten groups. This rationale was applied to the compositions (claims 4, 10-13, 19-27 and 33-36), methods of treating using the compositions (claims 5-8, 14-17, 28-31 and 37-40) and kit claims (claims 104-106), respectively, resulting in a 44 way restriction requirement.

Restriction under 35 U.S.C. 121 is a tool available for an examiner to use when examining complicated applications which may contain more than one claimed invention. Restriction is generally made between different categories of invention, but may also be made within the same category of invention. Here, the examiner has made restriction between compounds, compositions, methods of use and kits. Compounds and compositions are generally considered to be the same class of invention. Frequently patentability of a composition is dependent on the compound from which it is made. If the compound is novel it stands to reason that any composition made using that compound is also novel. Thus upon determination of patentability of the compound claims, the composition claims would also be rejoined and allowed. Similar rationale is applied to kit claims where the inventive novelty lies with the compound from which it is made. Further, upon determination of allowability of compound or composition claims, method of use claims containing all of the limitation of the compound/composition claims would be rejoined and fully examined for patentability under the guidelines of *In re Ochiai*. Thus restriction into four general categories of invention is here not improper, however it remains likely that all claims will eventually be rejoined should the compound claims be found allowable.

With respect to the dividing of Formula I into eleven (or more) groups based on the variables attached to the base group, it is noted that the first examiner made no such division, but did require an election of species in order to determine where to begin examination. Having been given a species from which to start examination the examiner found the species, itself, allowable over the prior art discovered. The examination was then expanded to a limited number of additional species which were also found allowable. The examiner attempted to limit allowance of the application to these examined species and equivalents. This was improper and the examiner was reversed in a petition decision. Upon further searching the examiner discovered prior art which rendered some species unpatentable and then rejected the claims accordingly. As the first examiner had considered the Markush group of claimed compounds in their entirety the second examiner in order to be consistent and give full faith and credit to the first examiner's work should have done the same. The purpose of a Markush group is to allow claiming of a large number of closely related (i.e. not patentably distinct) compounds to be examined together. The criteria for forming a Markush group is that the compounds encompassed thereby have a significant common core structure and an activity which is directly related thereto. The Markush group provided by Formula I above appears to satisfy that criteria in that the core structure is anchored by a five member ring having specific alkyl moieties attached thereto. Of the moieties directly attached to the ring, for R_1, R_2, and R_7, only a limited number of very common possibilities exist (i.e H, OH, Cl, ONO or ONO_2 or R_1 and R_2 together are $=CH_2$ or =O). The same applies to the two longer alkyl chains attached to the ring where most of the variables are simple and common alternatives (H or a bond, lower alkyl, etc.). Only X and Z have more significant and distinct possibilities. However, it has not been shown that they provide the activity of the compounds. Therefore, in view of the first examiner's action in setting forth an election of species within the entire Markush group, the second examiner should have continued the same election of species requirement, especially in view of the prior art applied in the last Office action done by the previous examiner.

In view of the above, the restriction requirement between compounds (Groups I-XI), compositions (Groups XII-XXII), methods of treating (Groups XXIII-XXXIII) and kits (Groups

XXXIV-XLIV), as suggested by applicants, is maintained as proper. Within each group an election of species is found to be proper and is maintained and the examiner directed to follow the guidelines of M.P.E.P. 803.02. Should the elected species (a compound) be found allowable, consideration of rejoinder of composition, method and kit claims must be considered.

DECISION

The petition is **GRANTED** to the extent indicated above.

The application will be forwarded to the examiner for further consideration of the amendment filed April 11, 2005, not inconsistent with this decision.

Should there be any questions about this decision please contact William R. Dixon, Jr., by letter addressed to Director, TC 1600, at the address listed above, or by telephone at 571-272-0519 or by facsimile sent to the general Office facsimile number, 571-273-8300.

George C. Elliott

George C. Elliott
Director, Technology Center 1600

UNITED STATES PATENT AND TRADEMARK OFFICE

Commissioner for Patents
United States Patent and Trademark Office
P.O. Box 1450
Alexandria, VA 22313-1450
www.uspto.gov
DIW Dec-09

COPY MAILED

DEC 03 2009

OFFICE OF PETITIONS

MARK F. SMITH
905 OHIO -PIKE
CINCINNATI OH 45245

In re Patent No. 6415486	:	
Issue Date: 07/09/2002	:	
Application Number: 09/516328	:	ON PETITION
Filing Date: 03/01/2000	:	
Attorney Docket Number: LRI-003PAT	:	

This is a decision in reference to the PETITION TO REVIEW AND RECORD PAYMENT OF A MAINTENANCE FEE FILED PRIOR TO EXPIRATION OF PATENT filed on August 7, 2009, which is treated as a petition filed under 37 CFR 1.377 to review the prior refusal of the PTO to accept and record a timely maintenance fee payment for the above-identified patent.

The petition is **granted**.

Petitioners assert that the first maintenance fee was timely paid with a surcharge on May 26, 2006, in the small entity amount. Petitioners further assert that a Notification of Loss of Small Entity Status and Fee Deficiency Submission under 37 CFR 1.28(c) were filed on August 15, 2006. Petitioners states that they recently learned that the status of the patent was expired. However, petitioners were never informed that the maintenance fee was not accepted, and did not receive any refund thereof.

A review of Office financial records reveals that the first maintenance fee was timely paid, but that due to an Office error in processing the fee deficiency submission under 37 CFR 1.28(c), the patent was incorrectly indicated as expired.

In view thereof, the patent is not expired. The Office apologizes for any inconvenience to petitioners.

As the error was not due to that of petitioners, no petition fee is due. The $400.00 fee filed with the petition will be refunded to petitioners.

Telephone inquiries related to this decision should be directed to the undersigned at 571.272.3231.

D Wood

Douglas I. Wood
Senior Petitions Attorney
Office of Petitions

UNITED STATES PATENT AND TRADEMARK OFFICE

Commissioner for Patents
United States Patent and Trademark Office
P.O. Box 1450
Alexandria, VA 22313-1450
www.uspto.gov

SETH Z. KALSON
BLAKELY SOKOLOFF TAYLOR & ZAFMAN LLP
SEVENTH FLOOR
12400 WILSHIRE BOULEVARD
LOS ANGELES, CA 90025-1026

COPY MAILED

NOV 2 3 2004

OFFICE OF PETITIONS

In re Application of	:	
Horwitz et al.	:	
Application No. 09/516,337	:	ON PETITION
Filed: March 1, 2000	:	
Attorney Docket No. 42390.P7257	:	

This is a decision on the petition under 37 C.F.R. § 1.137(b), filed November 4, 2004, to revive the above-identified application.

The petition is **GRANTED.**

This application became abandoned for failure to timely reply to the non-final Office action mailed January 23, 2004. No extensions of time under the provisions of 37 CFR 1.136(a) were timely obtained. Accordingly, this application became abandoned on April 24, 2004. A Notice of Abandonment was mailed October 4, 2004.

Petitioner has met the requirements to revive the above-identified application pursuant to 37 CFR 1.137(b).

An extension of time under 37 CFR 1.136 must be filed prior to the expiration of the maximum extendable period for reply. See In re Application of S., 8 USPQ2d 1630, 1631 (Comm'r Pats. 1988). Accordingly, since the authorization to charge the $950.00 extension of time fee was submitted was subsequent to the maximum extendable period for reply on November 4, 2004, this fee is unnecessary and will not be charged to petitioner's deposit account.

This matter is being referred to Technology Center 2600 for further examination on the merits.

Telephone inquiries regarding this decision should be directed to the undersigned at (571) 272-3282.

Liana Chase

Liana Chase
Petitions Examiner
Office of Petitions
Office of the Deputy Commissioner
for Patent Examination Policy

UNITED STATES PATENT AND TRADEMARK OFFICE

Commissioner for Patents
United States Patent and Trademark Office
P.O. Box 1450
Alexandria, VA 22313-1450
www.uspto.gov

COPY MAILED

SEP 20 2006

OFFICE OF PETITIONS

LEE & HAYES PLLC
421 W. RIVERSIDE AVENUE SUITE 500
SPOKANE, WA 99201

In re Application of	:	
Neta Amit et al.	:	DECISION ON PETITION
Application No. 09/516,402	:	
Filed: March 1, 2000	:	
Attorney Docket No.: MS1.2692US	:	

This is a decision on the petition filed August 30, 2006 under 37 CFR 1.137(a) to revive the above-identified application.

The petition under 37 CFR 1.137(a) is **DISMISSED**.

Any request for reconsideration of this decision must be submitted within TWO (2) MONTHS from the mail date of this decision. Extensions of time under 37 CFR 1.136(a) are permitted. The reconsideration request should include a cover letter entitled "Renewed Petition under 37 CFR 1.137(a)" or "Renewed Petition under 37 CFR 1.137(b)." This is not a final agency decision.

This application became abandoned on June 28, 2005, for failure to file a timely response to the Restriction Requirement mailed May 25, 2005, which set a one (1) month period for reply. Accordingly, a Notice of Abandonment was mailed July 31, 2006.

Petitioner asserts that the office action was not received as it was mailed to the previous attorneys of record and that they learned of the office action from the Notice of Abandonment.

UNAVOIDABLE DELAY

A grantable petition to revive an abandoned application under 37 CFR 1.137(a) must be accompanied by:

> (1) the required reply, unless previously filed. In a nonprovisional application abandoned for failure to prosecute, the required reply may be met by the filing of a continuing application. In a nonprovisional application filed on or after June 8, 1995, and abandoned for failure to prosecute, the required reply may also be met by the filing of a request for continued examination in compliance with §

> 1.114. In an application or patent, abandoned or lapsed for failure to pay the issue fee or any portion thereof, the required reply must be the payment of the issue fee or any outstanding balance thereof;
> (2) the petition fee as set forth in § 1.17(l);
> (3) a showing to the satisfaction of the Commissioner that the entire delay in filing the required reply from the due date for the reply until the filing of a grantable petition pursuant to this paragraph was unavoidable; and
> (4) any terminal disclaimer (and fee as set forth in § 1.20(d)) required pursuant to paragraph (c) of this section.

This petition lacks items (3) above.

With regard to item (3), decisions on reviving abandoned applications on the basis of "unavoidable" delay have adopted the reasonably prudent person standard in determining if the delay was unavoidable:

> The word 'unavoidable' . . . is applicable to ordinary human affairs, and requires no more or greater care or diligence than is generally used and observed by prudent and careful men in relation to their most important business. It permits them in the exercise of this care to rely upon the ordinary and trustworthy agencies of mail and telegraph, worthy and reliable employees, and such other means and instrumentalities as are usually employed in such important business. If unexpectedly, or through the unforeseen fault or imperfection of these agencies and instrumentalities, there occurs a failure, it may properly be said to be unavoidable, all other conditions of promptness in its rectification being present.[1]

The showing of record is inadequate to establish unavoidable delay within the meaning of 37 CFR 1.137(a). Specifically, an application is "unavoidably" abandoned only where petitioner, or counsel for petitioner, takes all action necessary for a proper response to the outstanding Office action, but through the intervention of unforeseen circumstances, such as failure or mail, telegraph, telefacsimile, or the negligence of otherwise reliable employees, the response is not timely received in the Office.[2]

---

[1] In re Mattullath, 38 App. D.C. 497, 514-15 (1912)(quoting Ex parte Pratt, 1887 Dec. Comm'r Pat. 31, 32-33 (1887)); see also Winkler v. Ladd, 221 F. Supp. 550, 552, 138 USPQ 666, 167-68 (D.D.C. 1963), aff'd, 143 USPQ 172 (D.C. Cir. 1963); Ex parte Henrich, 1913 Dec. Comm'r Pat. 139, 141 (1913). In addition, decisions on revival are made on a "case-by-case basis, taking all the facts and circumstances into account." Smith v. Mossinghoff, 671 F.2d 533, 538, 213 USPQ 977, 982 (D.C. Cir. 1982). Finally, a petition cannot be granted where a petitioner has failed to meet his or her burden of establishing that the delay was "unavoidable." Haines v. Quigg, 673 F. Supp. 314, 316-17, 5 USPQ2d 1130, 1131-32 (N.D. Ind. 1987).

[2] Ex parte Pratt, 1887 Dec. Comm'r Pat. 31 (Comm'r Pat. 1887).

Petitioner asserts that the Notice mailed May 25, 2005 was never received. A review of the record indicates that the office action was properly mailed to the address of record however, subsequent to the mailing of the office communication a revocation and power of attorney was filed on September 20, 2005. Therefore there has been no irregularity in the mailing of the Office action. Instead it appears that if petitioners were representatives for the assignee on May 25, 2005 when the office communication was mailed, a proper revocation and power of attorney should have been of record. It was not. The failure of petitioners to receive the office communication and to therefore file a timely response could have been avoided.

In view thereof, petitioner has not carried the burden of proof to establish to the satisfaction of the Commissioner that the delay was unavoidable and the record fails to adequately evidence that petitioner exercised the due care observed by prudent and careful men, in relation to their most important business, to establish unavoidable delay, Pratt, supra.

As the showing presented is insufficient to establish unavoidable delay within the meaning of 35 U.S.C. § 133 and 37 CFR 1.137(a), the petition will be dismissed.

ALTERNATIVE VENUE

Petitioner may wish to consider filing a renewed petition under 37 CFR 1.137(b)[3], which now provides that where the delay in reply was unintentional, a petition may be filed to revive an abandoned application or a lapsed patent pursuant to 37 CFR 1.137(b).

The filing of a petition under the unintentional standard cannot be intentionally delayed and therefore should be filed promptly. A person seeking revival due to unintentional delay cannot make a statement that the delay was unintentional unless the entire delay,

---

[3]Effective December 1, 1997, the provisions of 37 CFR 1.137(b) now provide that where the delay in reply was unintentional, a petition may be filed to revive an abandoned application or a lapsed patent pursuant to 37 CFR 1.137(b). A grantable petition filed under the provisions of 37 CFR 1.137(b) must be accompanied by:

(1) the required reply, unless previously filed. In a nonprovisional application abandoned for failure to prosecute, the required reply may be met by the filing of a continuing application. In an application or patent, abandoned or lapsed for failure to pay the issue fee or any portion thereof, the required reply must be the payment of the issue fee or any outstanding balance thereof.

(2) the petition fee as set forth in 37 CFR 1.17(m);

(3) a statement that the entire delay in filing the required reply from the due date for the reply until the filing of a grantable petition pursuant to 37 CFR 1.137(b) was unintentional. The Commissioner may required additional information where there is a question whether the delay was unintentional; and

(4) any terminal disclaimer (and fee as set forth in 37 CFR 1.20(d)) required pursuant to 37 CFR 1.137(c)).

including the delay from the date it was discovered that the application was abandoned until the filing of the petition to revive under 37 CFR 1.137(b), was unintentional. A statement that the delay was unintentional is not appropriate if petitioner intentionally delayed the filing of a petition for revival under 37 CFR 1.137(b).

Further correspondence with respect to this matter should be addressed as follows:

By mail: Mail Stop Petitions
Commissioner for Patents
P.O. Box 1450
Alexandria VA 22313-1450

By FAX: (571) 273-8300
Attn: Office of Petitions

Telephone inquiries concerning this matter may be directed to the undersigned Petitions Attorney at (571) 272-3212.

Patricia Faison-Ball

Patricia Faison-Ball
Senior Petitions Attorney

UNITED STATES PATENT AND TRADEMARK OFFICE

Commissioner for Patents
United States Patent and Trademark Office
P.O. Box 1450
Alexandria, VA 22313-1450
www.uspto.gov

COPY MAILED
OCT 27 2006
OFFICE OF PETITIONS

LEE & HAYES PLLC
421 W. RIVERSIDE AVENUE SUITE 500
SPOKANE, WA 99201

In re Application of	:	
Neta Amit et al.	:	DECISION ON PETITION
Application No. 09/516,402	:	
Filed: March 1, 2000	:	
Attorney Docket No.: MS1.2692US	:	

This is a decision on the petition filed October 3, 2006, to revive the above identified application under 37 CFR 1.137(b)[1].

The petition under 37 CFR 1.137(b) is **GRANTED**.

This application became abandoned on June 28, 2005, for failure to file a timely response to the Restriction Requirement mailed May 25, 2005, which set a one (1) month period for reply. Accordingly, a Notice of Abandonment was mailed July 31, 2006.

The response to the Restriction Requirement filed August 30, 2006 will be referred to Technology Center 2137 for further processing.

Telephone inquiries concerning this matter may be directed to the undersigned Petitions Attorney at (571) 272-3212.

Patricia Faison-Ball
Senior Petitions Attorney
Office of Petitions

---

[1]Effective December 1, 1997, the provisions of 37 CFR 1.137(b) now provide that where the delay in reply was unintentional, a petition may be filed to revive an abandoned application or a lapsed patent pursuant to 37 CFR 1.137(b). A grantable petition filed under the provisions of 37 CFR 1.137(b) must be accompanied by:

(1) the required reply, unless previously filed. In a nonprovisional application abandoned for failure to prosecute, the required reply may be met by the filing of a continuing application. In an application or patent, abandoned or lapsed for failure to pay the issue fee or any portion thereof, the required reply must be the payment of the issue fee or any outstanding balance thereof.

(2) the petition fee as set forth in 37 CFR 1.17(m);

(3) a statement that the entire delay in filing the required reply from the due date for the reply until the filing of a grantable petition pursuant to 37 CFR 1.137(b) was unintentional. The Commissioner may required additional information where there is a question whether the delay was unintentional; and

(4) any terminal disclaimer (and fee as set forth in 37 CFR 1.20(d)) required pursuant to 37 CFR 1.137(c)).

UNITED STATES PATENT AND TRADEMARK OFFICE

Commissioner for Patents
United States Patent and Trademark Office
P.O. Box 1450
Alexandria, VA 22313-1450
www.uspto.gov

FINNEGAN, HENDERSON, FARABOW,
GARRETT & DUNNER LLP
901 NEW YORK AVENUE, NW
WASHINGTON, DC 20001-4413

COPY MAILED

FEB 27 2006

OFFICE OF PETITIONS

Decision on Petition

In re Application of Liang :
Application No. 09/516,406 :
Filing Date: March 1, 2006 :
Attorney Docket No. 06502.0625-00000 :

This is a decision on the petition under 37 CFR 1.183 seeking waiver of 37 CFR §§ 1.67 and 1.63 where they require that any supplemental declaration be signed by the named inventors.

The petition is **dismissed**.

Facts:

The declaration filed with the application claimed the benefit of priority under 35 U.S.C. 120 of a provisional application.

A final Office action was mailed on November 22, 2005. The final Office action stated,

> The oath or declaration is defective. A new oath or declaration in compliance with 37 CFR 1.67(a) ... is required. The oath or declaration is defective because it claims the benefit under Title 35, United States Code, §120 of a United States application. A United States provisional application should claim the benefit under Title 35, United States Code, §119(e).

Petitioner has been unable to obtain the signature of the inventor for the supplemental declaration.

Petitioner has submitted an unsigned declaration along with a request to waive the need for the inventor's signature on the declaration.

Analysis:

Although the Office may waive the rules and allow a party to sign the oath or declaration on the inventor's behalf, the Office may not accept an oath or declaration not been signed by any party. Therefore, the petition must be dismissed.

Even if the declaration had been signed by the assignee on behalf of Liang, relief would be improper. The Office will not waive a rule when the rules already provide an avenue for the relief sought.[1] In this case, the error in the declaration can be fixed simply by the submission of an Application Data Sheet.

In some cases, when one needs to amend or correct an oath or declaration, one may file an Application Data Sheet without the need to file a new oath or declaration.

Per MPEP 601.05,

> Supplemental application data sheets may be ... supplied prior to payment of the issue fee to ... correct ... information in a previously submitted application data sheet, or an oath or declaration under 37 CFR 1.63 or 1.67. See 37 CFR 1.76(c)(1).
>
> A supplemental data sheet cannot be used to correct the following:
> (1) inventorship changes (37 CFR 1.48);
> (2) correspondence changes (37 CFR 1.33(a)); and
> (3) citizenship changes (37 CFR 1.63 or 37 CFR 1.67).

A Supplemental Application Data Sheet can be used to correct the errors in the declaration filed for the instant application. The Office notes that the term "Supplemental" must be used on the ADS even though an ADS was not previously filed. As stated in MPEP 601.05, "If no ADS was originally filed, but applicant wants to submit an ADS to correct ... application data, the ADS, even though it is the first-filed ADS, must be titled 'Supplemental Application Data Sheet.'"

As a courtesy, the Office provides the following information regarding the format of the Supplemental ADS. MPEP 601.05 states,

> Supplemental application data sheets must be titled "Supplemental Application Data Sheet" and also contain all of the seven section headings listed in 37 CFR 1.76(b) with all appropriate data for each heading. Supplemental application data sheets identifying only the information that is being changed ... are not acceptable. A supplemental ADS containing only new or changed information is likely to confuse the record, create unnecessary work for the Office, and does not comply with 37 CFR 1.76....
>
> A supplemental ADS that is being used to correct data shown in an oath or declaration, such as foreign priority or residence information for an inventor, would show the original incorrect information with strike-through or brackets, and the new information with underlining, as if an ADS had originally been used to submit the information. For example, if the original oath or declaration included a foreign priority claim, in order to delete the foreign priority claim, applicant should provide a supplemental ADS showing the foreign priority claim with strike-through or brackets to ensure that the patent will reflect such change.

---

[1] See Cantello v. Rasmussen, 220 USPQ 664, 664 (Comm'r Pat. 1982).

Any request for reconsideration of this decision must be submitted within TWO (2) MONTHS from the mail date of this decision. No further petition fee is required for the request. Extensions of time under 37 CFR 1.136(a) are NOT permitted. The reconsideration request should include a cover letter entitled "Renewed Petition under 37 CFR 1.183."

Further correspondence with respect to this matter should be addressed as follows:

By mail: Mail Stop Petition
Commissioner for Patents
P.O. Box 1450
Alexandria, VA 22313-1450

By facsimile: (571) 273-8300
Attn: Office of Petitions

By hand: U.S. Patent and Trademark Office
Customer Service Window
Randolph Building
401 Dulany Street
Alexandria, VA 22314

Telephone inquiries regarding this communication should be directed to Petitions Attorney Steven Brantley at (571) 272-3203.

Charles Steven Brantley
Senior Petitions Attorney
Office of Petitions

UNITED STATES PATENT AND TRADEMARK OFFICE

Commissioner for Patents
United States Patent and Trademark Office
P.O. Box 1450
Alexandria, VA 22313-1450
www.uspto.gov

Paper No. 110804

BLAKELY SOKOLOFF TAYLOR & ZAFMAN
12400 Wilshire Boulevard
Seventh Floor
Los Angeles, CA 90025-1030

NOV 18 2004

In re Application of:
Brian Doyle
Serial No.: 09/516,653
Filed: March 01, 2000
Attorney Docket No.: **P8123**

DECISION ON PETITION TO WITHDRAW HOLDING OF ABANDONMENT

This is a decision on the petition filed on June 14, 2004. The petition has been treated as a petition under 37 C.F.R. § 1.181, to withdraw the holding of abandonment of the above-identified application. No fee is required.

The petition is **GRANTED**.

The application was held abandoned for failure to timely file a response to the Office action mailed on November 06, 2003. A Notice of Abandonment was mailed on May 27, 2004.

Petitioner asserts that on February 03, 2004, a response including an amendment was filed. To support this assertion, petitioner has submitted a copy of the response bearing a certificate of mailing dated February 03, 2004, and a copy of a return postcard receipt, which acknowledges receipt in the USPTO of an amendment on February 06, 2004.

A review of the application file record reveals that the above-identified response having been acknowledged as being received in the PTO on February 06, 2004, is not of record in the application file and cannot be located. However, M.P.E.P. § 503 states, "A postcard receipt which itemizes and properly identifies the items which are being filed serves as *prima facie* evidence of receipt in the PTO of all the items listed thereon on the date stamped thereon by the PTO." Accordingly, it is concluded that the response was timely received in the PTO but lost somewhere after receipt thereof.

For the above stated reason, the petition is granted. The Notice of Abandonment is hereby vacated and the holding of abandonment withdrawn. The application is restored to pending status.

The copy of the response submitted with the supplement to the petition on June 14, 2004, is accepted since the response originally submitted was apparently lost.

The application file is being forwarded to the examiner of record for consideration of the response and prompt appropriate action.

Inquiries regarding this decision should be directed to Clayton E. LaBalle at (571) 272-1594.

James. L. Dwyer, Director
Technology Center 2800
Semiconductors, Electrical and Optical
Systems and Components

UNITED STATES PATENT AND TRADEMARK OFFICE

Commissioner for Patents
United States Patent and Trademark Office
P.O. Box 1450
Alexandria, VA 22313-1450
www.uspto.gov

COPY MAILED
SEP 14 2006
OFFICE OF PETITIONS

MORGAN & FINNEGAN, L.L.P.
3 WORLD FINANCIAL CENTER
NEW YORK, NY 10281-2101

In re Application of	:	
Richter et al	:	
Application No. 09/516,753	:	ON PETITION
Filed: March 1, 2000	:	
Attorney Docket No. 09/516,753	:	

This is a decision on the "Petition for Change the Order of Inventors' Names" under 37 CFR 1.182 filed August 4, 2006.

The petition is **granted.**

The order of the names of the inventors has been changed to the following:

1. Jacob Richter
2. Gregory Pinchasik

Telephone inquiries concerning this matter may be directed to Irvin Dingle at (571) 272-3210.

Irvin Dingle
Petitions Examiner
Office of Petitions

Attachment: Corrected Filing Receipt

UNITED STATES PATENT AND TRADEMARK OFFICE

UNITED STATES DEPARTMENT OF COMMERCE
United States Patent and Trademark Office
Address: COMMISSIONER FOR PATENTS
P.O. Box 1450
Alexandria, Virginia 22313-1450
www.uspto.gov

APPL NO.	FILING OR 371 (c) DATE	ART UNIT	FIL FEE REC'D	ATTY.DOCKET NO	DRAWINGS	TOT CLMS	IND CLMS
10/725,184	11/29/2003	3751	920	82RK0023U	3	20	3

CONFIRMATION NO. 9855
CORRECTED FILING RECEIPT
OC000000020399496
OC000000020399496

42173
LAW OFFICE OF RICHARD B. KLAR
28 East Old Country Road
Hicksville, NY 11801

Date Mailed: 09/13/2006

Receipt is acknowledged of this regular Patent Application. It will be considered in its order and you will be notified as to the results of the examination. Be sure to provide the U.S. APPLICATION NUMBER, FILING DATE, NAME OF APPLICANT, and TITLE OF INVENTION when inquiring about this application. Fees transmitted by check or draft are subject to collection. Please verify the accuracy of the data presented on this receipt. **If an error is noted on this Filing Receipt, please mail to the Commissioner for Patents P.O. Box 1450 Alexandria Va 22313-1450. Please provide a copy of this Filing Receipt with the changes noted thereon. If you received a "Notice to File Missing Parts" for this application, please submit any corrections to this Filing Receipt with your reply to the Notice. When the USPTO processes the reply to the Notice, the USPTO will generate another Filing Receipt incorporating the requested corrections (if appropriate).**

Applicant(s)

Kevin Martzloff, Malibu, CA;

Power of Attorney:

Richard Klar--31385

Domestic Priority data as claimed by applicant

Foreign Applications

If Required, Foreign Filing License Granted: 06/05/2004

The country code and number of your priority application, to be used for filing abroad under the Paris Convention, is
US10/725,184

Projected Publication Date: Not Applicable

Non-Publication Request: No

Early Publication Request: No

Title

Glitter marker

Preliminary Class

401

PROTECTING YOUR INVENTION OUTSIDE THE UNITED STATES

Since the rights granted by a U.S. patent extend only throughout the territory of the United States and have no effect in a foreign country, an inventor who wishes patent protection in another country must apply for a patent in a specific country or in regional patent offices. Applicants may wish to consider the filing of an international application under the Patent Cooperation Treaty (PCT). An international (PCT) application generally has the same effect as a regular national patent application in each PCT-member country. The PCT process **simplifies** the filing of patent applications on the same invention in member countries, but **does not result** in a grant of "an international patent" and does not eliminate the need of applicants to file additional documents and fees in countries where patent protection is desired.

Almost every country has its own patent law, and a person desiring a patent in a particular country must make an application for patent in that country in accordance with its particular laws. Since the laws of many countries differ in various respects from the patent law of the United States, applicants are advised to seek guidance from specific foreign countries to ensure that patent rights are not lost prematurely.

Applicants also are advised that in the case of inventions made in the United States, the Director of the USPTO must issue a license before applicants can apply for a patent in a foreign country. The filing of a U.S. patent application serves as a request for a foreign filing license. The application's filing receipt contains further information and guidance as to the status of applicant's license for foreign filing.

Applicants may wish to consult the USPTO booklet, "General Information Concerning Patents" (specifically, the section entitled "Treaties and Foreign Patents") for more information on timeframes and deadlines for filing foreign patent applications. The guide is available either by contacting the USPTO Contact Center at 800-786-9199, or it can be viewed on the USPTO website at http://www.uspto.gov/web/offices/pac/doc/general/index.html.

For information on preventing theft of your intellectual property (patents, trademarks and copyrights), you may wish to consult the U.S. Government website, http://www.stopfakes.gov. Part of a Department of Commerce initiative, this website includes self-help "toolkits" giving innovators guidance on how to protect intellectual property in specific countries such as China, Korea and Mexico. For questions regarding patent enforcement issues, applicants may call the U.S. Government hotline at 1-866-999-HALT (1-866-999-4158).

LICENSE FOR FOREIGN FILING UNDER
Title 35, United States Code, Section 184
Title 37, Code of Federal Regulations, 5.11 & 5.15

GRANTED

The applicant has been granted a license under 35 U.S.C. 184, if the phrase "IF REQUIRED, FOREIGN FILING LICENSE GRANTED" followed by a date appears on this form. Such licenses are issued in all applications where the conditions for issuance of a license have been met, regardless of whether or not a license may be required as set forth in 37 CFR 5.15. The scope and limitations of this license are set forth in 37 CFR 5.15(a) unless an earlier license has been issued under 37 CFR 5.15 (b). The license is subject to revocation upon written notification. The date indicated is the effective date of the license, unless an earlier license of similar scope has been granted under 37 CFR 5.13 or 5.14.

This license is to be retained by the licensee and may be used at any time on or after the effective date thereof unless it is revoked. This license is automatically transferred to any related applications(s) filed under 37 CFR 1.53(d). This license is not retroactive.

The grant of a license does not in any way lessen the responsibility of a licensee for the security of the subject matter as imposed by any Government contract or the provisions of existing laws relating to espionage and the national security or the export of technical data. Licensees should apprise themselves of current regulations especially with respect to certain countries, of other agencies, particularly the Office of Defense Trade Controls, Department of State (with respect to Arms, Munitions and Implements of War (22 CFR 121-128)); the Bureau of Industry and Security, Department of Commerce (15 CFR parts 730-774); the Office of Foreign Assets Control, Department of Treasury (31 CFR Parts 500+) and the Department of Energy.

NOT GRANTED

No license under 35 U.S.C. 184 has been granted at this time, if the phrase "IF REQUIRED, FOREIGN FILING LICENSE GRANTED" DOES NOT appear on this form. Applicant may still petition for a license under 37 CFR 5.12, if a license is desired before the expiration of 6 months from the filing date of the application. If 6 months has lapsed from the filing date of this application and the licensee has not received any indication of a secrecy order under 35 U.S.C. 181, the licensee may foreign file the application pursuant to 37 CFR 5.15(b).

UNITED STATES PATENT AND TRADEMARK OFFICE

Commissioner for Patents
United States Patent and Trademark Office
P.O. Box 1450
Alexandria, VA 22313-1450
www.uspto.gov

MORGAN & FINNEGAN, L.L.P.
3 WORLD FINANCIAL CENTER
NEW YORK, NY 10281-2101

COPY MAILED

JUN 15 2007

OFFICE OF PETITIONS

In re Application of	:	
Richter et al	:	
Application No. 09/516,753	:	ON PETITION
Filed: March 1, 2000	:	
Attorney Docket No. 09/516,753	:	

This is a decision on the "Petition for Change the Order of Inventors' Names" under 37 CFR 1.182 filed January 10, 2007.

The petition is **dismissed as moot.**

The Office records show the inventors have been changed to the following:

1. Jacob Richter
2. Gregory Pinchasik

The $400 petition fee submitted on January 10, 2007 is being credit to petitioner's deposit account.

Telephone inquiries concerning this matter may be directed to Irvin Dingle at (571) 272-3210.

Irvin Dingle
Petitions Examiner
Office of Petitions

Attachment: Replacement Filing Receipt

UNITED STATES PATENT AND TRADEMARK OFFICE

UNITED STATES DEPARTMENT OF COMMERCE
United States Patent and Trademark Office
Address: COMMISSIONER FOR PATENTS
P.O. Box 1450
Alexandria, Virginia 22313-1450
www.uspto.gov

APPL NO.	FILING OR 371(c) DATE	ART UNIT	FIL FEE REC'D	ATTY.DOCKET NO	TOT CLMS	IND CLMS
09/516,753	03/01/2000	3734	3604	2390/49701	94	6

CONFIRMATION NO. 3706

REPLACEMENT FILING RECEIPT

OC000000024370440

27123
MORGAN & FINNEGAN, L.L.P.
3 WORLD FINANCIAL CENTER
NEW YORK, NY 10281-2101

Date Mailed: 06/14/2007

Receipt is acknowledged of this regular Patent Application. It will be considered in its order and you will be notified as to the results of the examination. Be sure to provide the U.S. APPLICATION NUMBER, FILING DATE, NAME OF APPLICANT, and TITLE OF INVENTION when inquiring about this application. Fees transmitted by check or draft are subject to collection. Please verify the accuracy of the data presented on this receipt. **If an error is noted on this Filing Receipt, please mail to the Commissioner for Patents P.O. Box 1450 Alexandria Va 22313-1450. Please provide a copy of this Filing Receipt with the changes noted thereon. If you received a "Notice to File Missing Parts" for this application, please submit any corrections to this Filing Receipt with your reply to the Notice. When the USPTO processes the reply to the Notice, the USPTO will generate another Filing Receipt incorporating the requested corrections (if appropriate).**

Applicant(s)

Jacob Richter, Ramat Hasharon, ISRAEL;
Gregory Pinchasik, Herzeliya, ISRAEL;

Power of Attorney:

David Pfeffer--19825
Robert Paulson--21046
Harry Marcus--22390
Stephen Smith--22615
Kurt Richter--24052
Eugene Moroz--25237
J Dailey--27434

Domestic Priority data as claimed by applicant

Foreign Applications

If Required, Foreign Filing License Granted: 04/14/2000

The country code and number of your priority application, to be used for filing abroad under the Paris Convention, is US09/516,753

Projected Publication Date: None, application is not eligible for pre-grant publication

Non-Publication Request: No

Early Publication Request: No

Title

LONGITUDINALLY FLEXIBLE STENT

Preliminary Class

623

PROTECTING YOUR INVENTION OUTSIDE THE UNITED STATES

Since the rights granted by a U.S. patent extend only throughout the territory of the United States and have no effect in a foreign country, an inventor who wishes patent protection in another country must apply for a patent in a specific country or in regional patent offices. Applicants may wish to consider the filing of an international application under the Patent Cooperation Treaty (PCT). An international (PCT) application generally has the same effect as a regular national patent application in each PCT-member country. The PCT process **simplifies** the filing of patent applications on the same invention in member countries, but **does not result** in a grant of "an international patent" and does not eliminate the need of applicants to file additional documents and fees in countries where patent protection is desired.

Almost every country has its own patent law, and a person desiring a patent in a particular country must make an application for patent in that country in accordance with its particular laws. Since the laws of many countries differ in various respects from the patent law of the United States, applicants are advised to seek guidance from specific foreign countries to ensure that patent rights are not lost prematurely.

Applicants also are advised that in the case of inventions made in the United States, the Director of the USPTO must issue a license before applicants can apply for a patent in a foreign country. The filing of a U.S. patent application serves as a request for a foreign filing license. The application's filing receipt contains further information and guidance as to the status of applicant's license for foreign filing.

Applicants may wish to consult the USPTO booklet, "General Information Concerning Patents" (specifically, the section entitled "Treaties and Foreign Patents") for more information on timeframes and deadlines for filing foreign patent applications. The guide is available either by contacting the USPTO Contact Center at 800-786-9199, or it can be viewed on the USPTO website at http://www.uspto.gov/web/offices/pac/doc/general/index.html.

For information on preventing theft of your intellectual property (patents, trademarks and copyrights), you may wish to consult the U.S. Government website, http://www.stopfakes.gov. Part of a Department of Commerce initiative, this website includes self-help "toolkits" giving innovators guidance on how to protect intellectual property in specific countries such as China, Korea and Mexico. For questions regarding patent enforcement issues, applicants may call the U.S. Government hotline at 1-866-999-HALT (1-866-999-4158).

LICENSE FOR FOREIGN FILING UNDER
Title 35, United States Code, Section 184
Title 37, Code of Federal Regulations, 5.11 & 5.15

GRANTED

The applicant has been granted a license under 35 U.S.C. 184, if the phrase "IF REQUIRED, FOREIGN FILING LICENSE GRANTED" followed by a date appears on this form. Such licenses are issued in all applications where the conditions for issuance of a license have been met, regardless of whether or not a license may be required as set forth in 37 CFR 5.15. The scope and limitations of this license are set forth in 37 CFR 5.15(a) unless an earlier license has been issued under 37 CFR 5.15(b). The license is subject to revocation upon written notification. The date indicated is the effective date of the license, unless an earlier license of similar scope has been granted under 37 CFR 5.13 or 5.14.

This license is to be retained by the licensee and may be used at any time on or after the effective date thereof unless it is revoked. This license is automatically transferred to any related applications(s) filed under 37 CFR 1.53(d). This license is not retroactive.

The grant of a license does not in any way lessen the responsibility of a licensee for the security of the subject matter as imposed by any Government contract or the provisions of existing laws relating to espionage and the national security or the export of technical data. Licensees should apprise themselves of current regulations especially with respect to certain countries, of other agencies, particularly the Office of Defense Trade Controls, Department of State (with respect to Arms, Munitions and Implements of War (22 CFR 121-128)); the Bureau of Industry and Security, Department of Commerce (15 CFR parts 730-774); the Office of Foreign Assets Control, Department of Treasury (31 CFR Parts 500+) and the Department of Energy.

NOT GRANTED

No license under 35 U.S.C. 184 has been granted at this time, if the phrase "IF REQUIRED, FOREIGN FILING LICENSE GRANTED" DOES NOT appear on this form. Applicant may still petition for a license under 37 CFR 5.12, if a license is desired before the expiration of 6 months from the filing date of the application. If 6 months has lapsed from the filing date of this application and the licensee has not received any indication of a secrecy order under 35 U.S.C. 181, the licensee may foreign file the application pursuant to 37 CFR 5.15(b).

IN THE UNITED STATES PATENT AND TRADEMARK OFFICE

Applicant(s): Jacob RICHTER
Gregory PINCHASIK

Serial No.: 09/516,753

Filed: March 1, 2000

For: Longitudinally Flexible Stent

ISSUE INFORMATION

U.S. Patent No.	:	US 7,414,062 B1
Issue Date	:	November 28, 2006
Confirmation No.	:	3706

Mail Stop Petition
Commissioner for Patents
P.O. Box 1450
Alexandria, VA 22313

Re: PETITION TO REPRINT THE FIRST PAGE PATENT UNDER 37 CFR 1.182

Sir:

Applicant respectfully requests reprinting of the first page of US Patent No. 7,414,062 B1 due to an error on behalf of the Patent Office involving the first page. The first named inventor should be Jacob Richter not Gregory Pinchaski.

Cover Page of Patent: (Presently shows Gregory Pinchaski as the first inventor- the first inventor should be Jacob Richter - Cover page should read as below)

03/15/2007 CKHLOK
00000475 134500 09516753
400.00 CR

(12) United Sates Patent

Richter et al

(75) Inventors: Jacob Richter, Ramat Hasaron (IL)
Gregory Pinchaski, Herzeliya (IL)

Applicant received a Decision (enclosed) from the US Patent and Trademark Office. The Decision indicates that Applicant's petition under 37 CFR 1.182 of August 4, 2006, to change the order of Inventors' names was GRANTED. However, Applicant's US Patent No. 7,414,062 B1 was not printed correctly. Enclosed herewith is the copy of a Decision on the "Petition for Change the Order of Inventors' Names" received from the US Patent and Trademark Office.

The errors were due to mistakes on the part of the Patent Office. No fee is believed due. However, in the event any additional fees are required, the Commissioner is authorized to charge deposit account no. 13-4500, order no. 4303-4003US1. A duplicate if this sheet is included.

Favorable and early consideration is respectfully requested.

Respectfully submitted,
MORGAN & FINNEGAN, L.L.P.

Dated: January 10, 2006

By: _____
Keith J. McWha
Registration No. 44,235

Mailing Address:

MORGAN & FINNEGAN, L.L.P.
Morgan & Finnegan, LLP
3 World Financial Center
New York, NY 10281-2101
(212) 415-8700 (Telephone)
(212) 415-8701 (Facsimile)

UNITED STATES PATENT AND TRADEMARK OFFICE

UNDER SECRETARY OF COMMERCE FOR INTELLECTUAL PROPERTY AND
DIRECTOR OF THE UNITED STATES PATENT AND TRADEMARK OFFICE
WASHINGTON, D.C. 20231
www.uspto.gov.

MAY 13 2003

Paper No. 13

In re Application of
James Hanmer
Application No. 09/517,089
Filed: March 6, 2000
Attorney Docket No. 540-190

: DECISION ON PETITION

This is a decision on the petition filed on April 24, 2003 by which petitioner requests withdrawal of the holding that this application stands abandoned for failure to file a reply to the Office letter dated February 11, 2002. No fee is required for the petition.

The petition is granted.

Petitioner alleges that this application is abandoned because a timely reply to the Office letter in question was in fact filed. In support of this allegation, petitioner has included a copy of the reply and a copy of the filing receipt for the reply showing that the reply was received in the Office on February 27, 2002. This showing suffices to establish that the application is not abandoned.

Accordingly, the Notice of Abandonment is hereby vacated, the holding of abandonment is withdrawn, and the application is restored to pending status. The application is being forwarded to the examiner for action on the reply filed on February 27, 2002.

PETITION GRANTED.

E. Rollins-Cross, Director, Patent
Examining Groups 3710 and 3720

Nixon & Vanderhye, P.C.
1100 North Glebe Road
8th Floor
Arlington, VA 22201-4714

UNITED STATES PATENT AND TRADEMARK OFFICE

Commissioner for Patents
United States Patent and Trademark Office
P.O. Box 1450
Alexandria, VA 22313-1450
www.uspto.gov

Steme Kessler Goldstein & Fox PLLC
1100 New York Avenue N W
Suite 600
Washington, DC 20005-3934

COPY MAILED

APR 14 2008

OFFICE OF PETITIONS

In re Application of	:	
Peter Garrett Bianco et al.	:	
Application No. 09/517,121	:	DECISION ON PETITION
Filed: March 1, 2000	:	TO WITHFRAW
Attorney Docket No. CITI0316-CIP	:	FROM RECORD
	:	

This is a decision on the Request to Withdraw as attorney or agent of record under 37 CFR 1.136(b) filed June 29, 2006.

The request is **NOT APPROVED** because it is moot.

A review of the file record indicates that the power of attorney to Steme Kessler Goldstein & Fox PLLC has been revoked by the assignee of the patent application on August 25, 2006. Accordingly, the request to withdraw under 37 CFR 1.136(b) is moot.

All future communications from the Office will continue to be directed to the below-listed address until otherwise notified by applicant.

Telephone inquiries concerning this decision should be directed to Carl Friedman at 571-272-6842.

David Bucci
Petitions Examiner
Office of Petitions

Cc: KING & SPALDING LLP (CITI CUSTOMER NUMBER)
ATTN: GEORGE T. MARCOU
1700 PENNSYLVANIA AVENUE, NW
SUITE 200
WASHINGTON DC 20006

UNITED STATES PATENT AND TRADEMARK OFFICE

Commissioner for Patents
United States Patent and Trademark Office
P.O. Box 1450
Alexandria, VA 22313-1450
www.uspto.gov

COPY MAILED

JUL 27 2007

OFFICE OF PETITIONS

ADAM H. TACHNER
CROSBY HEAFEY ROACH & MAY
P.O. BOX 7936
SAN FRANCISCO, CA 94120-7936

In re Application of :
Minoru Horii :
Application No. 09/517,149 : ON PETITION
Filed: March 2, 2000 :
Attorney Docket No. 21778.04000 :

This is a decision on the petition filed, March 23, 2007 under 37 CFR 1.137(b), to revive the above-identified application.

The petition is **GRANTED.**

The above-identified application became abandoned for failure to reply within the meaning of 37 CFR 1.113 in a timely manner to the final Office action mailed December 8, 2005, which set a shortened statutory period for reply of three (3) months. No extension of time under the provisions of 37 CFR 1.136(a) were obtained. Accordingly, the above-identified application became abandoned on March 9, 2006.

The above-identified application is being revived solely for purposes of continuity with a Request For Continued Examination (RCE) filed on April 13, 2006.

It is not apparent whether the person signing the statement of unintentional delay was in a position to have firsthand or direct knowledge of the facts and circumstances of the delay at issue. Nevertheless, such statement is being treated as having been made as the result of a reasonable inquiry into the facts and circumstances of such delay. See 37 CFR 10.18(b) and Changes to Patent Practice and Procedure; Final Rule Notice, 62 Fed. Reg. 53131, 53178 (October 10, 1997), 1203 Off. Gaz. Pat. Office 63, 103 (October 21, 1997). In the event that such an inquiry has not been made, petitioner must make such an inquiry. If such inquiry results in the discovery that it is not correct that the entire delay in filing the required reply from the due date for the reply until the filing of a grantable petition pursuant to 37 CFR 1.137(b) was unintentional, petitioner must notify the Office.

The person signing the instant petition also requests a change of correspondence address to the address given in the instant petition. There is, however, no indication that the person signing the instant petition was ever given a power of attorney or authorization of agent to prosecute the above-identified application. If the person signing the instant petition desires to receive future correspondence regarding this application, the appropriate power of attorney or authorization of agent must be submitted. While a courtesy copy of this decision is being mailed to the person signing the instant petition, all future correspondence will be directed to the address currently of record until such time as appropriate instructions are received to the contrary.

Telephone inquiries concerning this decision should be directed to Irvin Dingle at (571) 272-3210. This matters is being referred to Technology Center AU 2625 for further processing.

Irvin Dingle
Petitions Examiner
Office of Petitions

cc: Doyle B. Johnson
Two Embarcadero Center, Suite 2000
San Francisco, CA 94111

UNITED STATES PATENT AND TRADEMARK OFFICE

Commissioner for Patents
United States Patent and Trademark Office
P. O. Box 1450
Alexandria, VA 22313-1450
www. uspto. gov

ADAM H. TACHNER
CROSBY HEAFEY ROACH & MAY
P.O. BOX 7936
SAN FRANCISCO, CA 94120-7936

COPY MAILED

AUG 0 2 2007

OFFICE OF PETITIONS

In re Application of	:	
Minoru Horii	:	
Application No. 09/517,149	:	ON PETITION
Filed: March 2, 2000	:	
Attorney Docket No. 21778.04000	:	

CORRECTED DECISION

This is a decision on the petition to revive under 37 CFR 1.137(b), filed March 23, 2007, which is being treated as a petition under 37 CFR 1.181 to withdraw the holding of abandonment of the above-identified application.

The petition under 37 CFR 1.181 is **GRANTED.**

The above-identified application was held abandoned for failure to reply within the meaning of 37 CFR 1.113 in a timely manner to the final Office action mailed December 8, 2005, which set a shortened statutory period for reply of three (3) months. Petitioner indicates that the reply was timely filed in the form of a Request for Continued Examination (RCE) with one (1) month extension of time filed April 13, 2006 (certificate of mailing April 10, 2006).

Since the reply was in fact timely filed on April 13, 2006, the $1500 petition fee is being credit to petitioner's deposit account. Therefore, the holding of abandonment is being withdrawn.

The person signing the instant petition requested a change of correspondence address on March 30, 2006 to the address given in the instant petition. There is, however, no indication that the person signing the instant petition was ever given a power of attorney or authorization of agent to prosecute the above-identified application. If the person signing the instant petition desires to receive future correspondence regarding this application, the appropriate power of attorney or authorization of agent must be submitted. While a courtesy copy of this decision is being mailed to the person signing the instant petition, all future correspondence will be directed to the address currently of record until such time as appropriate instructions are received to the contrary.

The decision mailed July 27, 2007 is hereby vacated as of the mail date of this decision.

Telephone inquiries concerning this decision should be directed to Irvin Dingle at (571) 272-3210.

This matters is being referred to Technology Center AU 2625 for further processing.

Irvin Dingle
Petitions Examiner
Office of Petitions

cc: Doyle B. Johnson
Two Embarcadero Center, Suite 2000
San Francisco, CA 94111

UNITED STATES PATENT AND TRADEMARK OFFICE

Commissioner for Patents
United States Patent and Trademark Office
P.O. Box 1450
Alexandria, VA 22313-1450
www.uspto.gov

ADAM H. TACHNER
CROSBY HEAFEY ROACH & MAY
P.O. BOX 7936
SAN FRANCISCO, CA 94120-7936

COPY MAILED
NOV 16 2007
OFFICE OF PETITIONS

In re Application of :
Minoru Horii :
Application No. 09/517,149 : ON PETITION
Filed: March 2, 2000 :
Attorney Docket No. 21778.04000 :

This is a decision on the petition under 37 CFR 1.313(a), filed November 13, 2007, to withdraw the above-identified application from issue.

The petition is **DISMISSED**.

Petitioner requests that the present application be withdrawn from issue for consideration of an IDS filed on November 13, 2007.

37 CFR 1.313(a) states, in part:

> Applications may be withdrawn from issue for further action at the initiative of the Office or upon petition by the applicant. To request that the Office withdraw an application from issue, applicant must file a petition under this section including the fee set forth in § 1.17(h) and a showing of good and sufficient reasons why withdrawal of the application from issue is necessary.

As such, a grantable petition requesting withdrawal of an application from issue must be accompanied by: (1) a showing of good and sufficient reasons why withdrawal of the application from issue is necessary; and (2) the requisite petition fee under 37 CFR 1.17(h). The petition fee of $130 has been charged to petitioner's deposit account.

However, the petition does not set forth good and sufficient reasons as to why withdrawal of the application from issue is necessary. The mere submission of an IDS with the petition does not make withdrawal of the application from issue necessary. There are other avenues open to applicant to have an IDS considered other than by way of petition.

Following the part of 37 CFR 1.313(a) cited above, 37 CFR 1.313(a) goes on to state:

> A petition under this section is not required if a request for continued examination under § 1.114 is filed prior to payment of the issue fee.

The filing of a request for continued examination (RCE) under 37 CFR 1.114 with a submission and the fee set forth in 37 CFR 1.17(e) would have been a proper available option to have the IDS considered. It is well documented that an IDS satisfies the submission requirement under 37 CFR 1.114. *See* MPEP 706.07(h)(II).

For the above reasons, this application will not be withdrawn from issue under the provisions of 37 CFR 1.313(a).

The issue fee in this application has not been received. If the IDS is not favorably considered by the examiner, petitioner may wish to file a petition under 37 CFR 1.313(c)(2).

Any inquiries regarding this decision should be directed to Irvin Dingle at (571) 272-3210.

This matter is being referred to Technology Center AU 2625 for appropriate action on the IDS filed November 13, 2007.

Irvin Dingle
Petition Examiner
Office of Petitions

UNITED STATES PATENT AND TRADEMARK OFFICE

COMMISSIONER FOR PATENTS
UNITED STATES PATENT AND TRADEMARK OFFICE
P.O. BOX 1450
ALEXANDRIA, VA 22313-1450
www.uspto.gov

Paper No. 14

ANTONELLI, TERRY, STOUT & KRAUS, LLP
1300 NORTH SEVENTEENTH STREET
SUITE 1800
ARLINGTON, VA 22209-9889

COPY MAILED
APR 23 2004
OFFICE OF PETITIONS

In re Application :
Fujii, et al. : ON PETITION
Application No. 09/517,176 :
Filed: March 3, 2000 :
Atty. Docket No.: 501.38264X00:

This is a decision on the petition filed October 21, 2003 under 37 CFR 1.181 to withdraw the holding of abandonment for the above-identified application. This decision is also in response to petitioner's "REQUEST FOR RE-DETERMINATION OF PATENT TERM" filed hereto.

DECISION UNDER 37 CFR 1.181

The petition under 37 CFR 1.181 is GRANTED.

This application was held abandoned June 12, 2003 for failure to timely submit the issue fee as required by the Notice of Allowance and Issue Fee Due ("Notice") mailed March 11, 2003. The Notice set a three (3) month statutory period of time for reply. Notice of Abandonment was mailed July 21, 2003.

Petitioner argues that the issue fee transmittal form and issue fee payment form were timely submitted on June 11, 2003. Petitioner has submitted as proof of receipt of the alleged reply a date stamped ~~non-receipt~~ postcard of the non-final Office. 7/22/04

A review of the application file does not indicate receipt of the reply purportedly filed June 3, 2003, however, in view of the evidence presented by petitioner, the Notice of Abandonment in the above-referenced application is hereby VACATED and the holding of abandonment is WITHDRAWN.

DECISION ON REQUEST FOR RE-DETERMINATION OF PATENT TERM

Petitioner requests re-determination of the patent term adjustment for the instant applicant in view of the submission of the instant application.

Petitioner is advised that the Issue Notification will indicate the amount of patent term adjustment, if any, accorded any patent to issue from the instant application. Furthermore, current patent term adjustment is also available for the Patent Application Information Retrieval system.

The required issue fee has been charged to petitioner's deposit account as authorized on form PTOL-85(b).

This application is being forwarded to the Publications Division for processing into a patent.

Telephone inquiries concerning this matter may be directed to the undersigned at (703) 305-0210.

Alesia M. Brown
Senior Petitions Attorney
Office of Petitions

#11
EAW
9/28/01

UNITED STATES PATENT AND TRADEMARK OFFICE

COMMISSIONER FOR PATENTS
UNITED STATES PATENT AND TRADEMARK OFFICE
WASHINGTON, D.C. 20231
www.uspto.gov

SEP 28 2001

Paper No. 11

Gail M. Taylor Russell
4807 Spicewood Springs Road
Building One, Suite 1200
Austin, TX 78759

In re Application of:	:	
Vlado Ostovic.	:	
Application No. 09/517,256	:	DECISION ON REQUEST TO
Filed: March 02, 2000	:	WITHDRAW FROM RECORD
Docket Number: 800448	:	

This is a decision on the request to withdraw as attorney of record under 37 C.F.R. § 1.36, filed July 31, 2001.

A review of the application file record indicates that the power of attorney to Gail M. Taylor Russell, who is identified in the Declaration and Appointment of Attorney filed on March 02, 2000, has been revoked by the applicant of this patent application.

For the above-stated reason, the request is **dismissed** as moot.

All future communications from the Office will be directed to the below-listed address until otherwise notified by applicant.

Inquiries related to this decision should be directed to Lissi Mojica Marquis at (703) 308-2260.

Lissi Mojica Marquis, Special Programs Examiner
Technology Center 2800
Semiconductors, Electrical and Optical
Systems and Components

cc: Dr. Vlado Ostovic
Muckensturmerstr.25
Weinhem, 69469
Germany

UNITED STATES PATENT AND TRADEMARK OFFICE

Commissioner for Patents
United States Patent and Trademark Office
P.O. Box 1450
Alexandria, VA 22313-1450
www.uspto.gov

FORD GLOBAL TECHNOLOGIES, LLC.
SUITE 600 - PARKLANE TOWERS EAST
ONE PARKLANE BLVD.
DEARBORN, MI 48126

COPY MAILED

APR 30 2004

OFFICE OF PETITIONS

In re Application of	:	
Vlado Ostovic	:	
Application No. 09/517,256	:	ON PETITION
Filed: March 2, 2000	:	
Attorney Docket No. 800448	:	

This is a decision on the petition under 37 CFR 1.137(b), filed March 9, 2004, to revive the above-identified application.

The petition is **dismissed.**

Any request for reconsideration of this decision must be submitted within TWO (2) MONTHS from the mail date of this decision. Extensions of time under 37 CFR 1.136(a) are permitted. The reconsideration request should include a cover letter entitled "Renewed Petition under 37 CFR 1.137(b)."

This application became abandoned for failure to timely pay the issue fee on or before December 4, 2003. Accordingly, this application became abandoned on December 5, 2003. A Notice of Abandonment was mailed on February 10, 2004.

Effective December 1, 1997, the provisions of 37 CFR 1.137(b) now provide that where the delay in reply was unintentional, a petition may be filed to revive an abandoned application pursuant to 37 CFR 1.137(b). A grantable petition pursuant to 37 CFR 1.137(b) must be accompanied by:

> (1) the required reply, unless previously filed. In a nonprovisional application abandoned for failure to prosecute, the required reply may be met by the filing of a continuing application. In an application, abandoned or lapsed for failure to pay the issue fee or any portion thereof, the required reply must be the payment of the issue fee or any

outstanding balance thereof.

(2) the petition fee as set forth in 37 CFR 1.17(m);

(3) a statement that the **entire** delay in filing the required reply from the due date for the reply until the filing of a grantable petition pursuant to 37 CFR 1.137(b) was unintentional. The Commissioner may require additional information where there is a question whether the delay was unintentional; and

(4) any terminal disclaimer (and fee set forth in 37 CFR 1.20(d)) required pursuant to 37 CFR 1.137(d).

The instant petition does not satisfy requirement (2) above.

The required petition fee has not been submitted, nor has an authorization to charge the petition fee to a deposit account been provided. As such, the petition must be dismissed.

Further correspondence with respect to this matter should be addressed as follows:

By mail: Mail Stop Petition
Commissioner for Patents
Box 1450
Alexandria, VA 22313

By FAX: (703) 872-9306
Attn: Office of Petitions

By hand: Customer Service Window
2011 South Clark Place
Crystal Plaza Two (left side entrance of building)
Arlington, VA

Telephone inquiries concerning this matter may be directed to the undersigned at (703) 306-9200.

Edward J. Tannouse
Petitions Attorney
Office of Petitions
United States Patent and Trademark Office

UNITED STATES PATENT AND TRADEMARK OFFICE

Commissioner for Patents
United States Patent and Trademark Office
P.O. Box 1450
Alexandria, VA 22313-1450
www.uspto.gov

FORD GLOBAL TECHNOLOGIES, LLC.
SUITE 600 - PARKLANE TOWERS EAST
ONE PARKLANE BLVD.
DEARBORN, MI 48126

COPY MAILED

MAY 27 2004

OFFICE OF PETITIONS

In re Application of	:	
Vlado Ostovic	:	
Application No. 09/517,256	:	ON PETITION
Filed: March 2, 2000	:	
Attorney Docket No. 800448	:	

This is a decision on the renewed petition under 37 CFR 1.137(b), filed May 14, 2004, to revive the above-identified application.

The petition is **GRANTED**.

This application became abandoned for failure to timely pay the issue fee on or before December 4, 2003. Accordingly, this application became abandoned on December 5, 2003. A Notice of Abandonment was mailed on February 10, 2004.

This application is being forwarded to Publishing Division for review of the drawings filed March 9, 2004.

Telephone inquiries concerning this matter may be directed to the undersigned at (703) 306-9200.

Edward J. Tannouse
Petitions Attorney
Office of Petitions
United States Patent and Trademark Office

UNITED STATES PATENT AND TRADEMARK OFFICE

Commissioner for Patents
United States Patent and Trademark Office
P.O. Box 1450
Alexandria, VA 22313-1450
www.uspto.gov

Paper No. 10

Swabey Ogilvy Renault
1981 McGill Avenue Suite 1600
Montreal QC H3A2Y-3 CA CANADA

COPY MAILED

SEP 1 7 2004

OFFICE OF PETITIONS

In re Application of :
Claude Barbeau, et al. :
Application No. 09/517,323 :
Filed: March 2, 2000 :
Attorney Docket No. 94-P-7514US :

ON PETITION

This is a decision on the petition, filed July 30, 2004, to revive the above-identified application under the provisions of 37 CFR 1.137(b).

The application became abandoned for a failure to reply in a timely manner to the non-final Office action mailed December 21, 2001, which set a shortened statutory period for reply of three (3) months. No extension of time under the provisions of 37 CFR 1.136(a) was obtained. A Notice of Abandonment was mailed on July 30, 2002. In response, on July 30, 2004, the present petition was filed, as well as a Request for Continued Examination (RCE) under 37 CFR 1.114 and a preliminary amendment.

Continued examination under 37 CFR 1.114 does not apply to an application unless prosecution in the application is closed. Since the RCE was accompanied by an amendment to the non-final Office action, the reply will be entered and considered under 37 CFR 1.111. As the RCE filed July 30, 2004 is considered improper, the $385 filing fee paid therefor is being credited to counsel's deposit account.

The petition is **GRANTED**.

Telephone inquiries concerning this decision may be directed to the undersigned at (703) 305-9220. All other inquiries regarding this application should be directed to the Technology Center.

The application file is being forwarded to Technology Center AU 1771 for consideration of the amendment filed July 30, 2004.

Sherry D. Brinkley
Petitions Examiner
Office of Petitions
Office of the Deputy Commissioner
for Patent Examination Policy

UNITED STATES PATENT AND TRADEMARK OFFICE

COMMISSIONER FOR PATENTS
UNITED STATES PATENT AND TRADEMARK OFFICE
P.O. BOX 1450
ALEXANDRIA, VA 22313-1450
www.uspto.gov

Paper No. 9

BROWN & MICHAELS, PC
400 M & T BANK BUILDING
118 NORTH TIOGA STREET
ITHACA, NY 14850

COPY MAILED

JAN 2 2 2004

OFFICE OF PETITIONS

In re Application of
Moore, Chad Byron
Application No. 09/517,353
Filed: March 2, 2000
Attorney Docket No. MRE-9

ON PETITION

This is a decision on the petition under 37 C.F.R. § 1.137(b), filed December 15, 2003, to revive the above-identified application.

The petition is **granted.**

This application became abandoned for failure to timely reply within three months to the non-final Office action mailed June 2, 2003. No extensions of time under the provisions of 37 CFR 1.136(a) were obtained. Accordingly, this application became abandoned on September 3, 2003.

Petitioner has met the requirements to revive the above-identified application pursuant to 37 CFR 1.137(b).

The file is now being forwarded to Technology Center 2800 for further examination on the merits.

Telephone inquiries should be directed to Paralegal Liana Chase at (703) 306-0482.

Wan Laymon
Petitions Examiner
Office of Petitions
Office of the Deputy Commissioner
for Patent Examination Policy

UNITED STATES PATENT AND TRADEMARK OFFICE

COMMISSIONER FOR PATENTS
UNITED STATES PATENT AND TRADEMARK OFFICE
P.O. BOX 1450
ALEXANDRIA, VA 22313-1450
www.uspto.gov

Paper No. 36

COPY MAILED

NOV 2 0 2003

OFFICE OF PETITIONS

FISH & RICHARDSON
1425 K STREET, N.W.
11TH FLOOR
WASHINGTON DC 20005-3500

In re Application of
Shunpei Yamazaki et al
Application No. 09/517,354
Filed: March 2, 2000
Attorney Docket No.
07977/015003/US2954/2957D

ON PETITION

This is a decision on the petition, filed November 19, 2003, under 37 CFR 1.313(c)(2) to withdraw the above-identified application from issue after payment of the issue fee.

The petition is **GRANTED**.

The above-identified application is withdrawn from issue for consideration of a submission under 37 CFR 1.114 (request for continued examination). See 37 CFR 1.313(c)(2).

Petitioner is advised that the issue fee paid on September 26, 2003 in the above-identified application cannot be refunded. If, however, the above-identified application is again allowed, petitioner may request that it be applied towards the issue fee required by the new Notice of Allowance.[1]

Telephone inquiries should be directed to the undersigned at (703) 305-8859.

After receipt of the file in the Office of Petitions, the application will be forwarded to Technology Center AU 2871 for processing of the request for continued examination under 37 CFR 1.114.

Karen Creasy

Karen Creasy
Petitions Examiner
Office of Petitions
Office of the Deputy Commissioner
for Patent Examination Policy

---

[1] The request to apply the issue fee to the new Notice may be satisfied by completing and returning the new Issue Fee Transmittal Form PTOL-85(b), which includes the following language thereon: "Commissioner for Patents is requested to apply the Issue Fee and Publication Fee (if any) or re-apply any previously paid issue fee to the application identified above." Petitioner is advised that, whether a fee is indicated as being due or not, the Issue Fee Transmittal Form **must** be completed and timely submitted to avoid abandonment. Note the language in bold text on the first page of the Notice of Allowance and Fee(s) Due (PTOL-85).

UNITED STATES PATENT AND TRADEMARK OFFICE

Under Secretary of Commerce for Intellectual Property and
Director of the United States Patent and Trademark Office
Washington, D.C. 20231
www.uspto.gov

Paper No. 26

SCOTT C. HARRIS
FISH & RICHARDSON PC
4350 LAJOLLA VILLAGE DRIVE SUITE 500
SAN DIEGO CA 92122

COPY MAILED

MAR 07 2003

OFFICE OF PETITIONS

ON PETITION

In re Application of :
Shunpei Yamazaki et al :
Application No. 09/517,354 :
Filed: March 2, 2000 :
Attorney Docket No. 07977/015003/US2954/2957D :

This is a decision on the petition, filed March 6, 2003, under 37 CFR 1.313(c)(2) to withdraw the above-identified application from issue after payment of the issue fee.

The petition is **GRANTED.**

The above-identified application is withdrawn from issue for consideration of a submission under 37 CFR 1.114 (request for continued examination). See 37 CFR 1.313(c)(2).

Petitioner is advised that the issue fee paid on October 22, 2002 in the above-identified application cannot be refunded. If, however, the above-identified application is again allowed, petitioner may request that it be applied towards the issue fee required by the new Notice of Allowance.[1]

Telephone inquiries should be directed to the undersigned at (703) 305-8859.

After receipt of the file in the Office of Petitions, the application will be forwarded to Technology Center AU 2871 for processing of the request for continued examination under 37 CFR 1.114.

Karen Creasy

Karen Creasy
Petitions Examiner
Office of Petitions
Office of the Deputy Commissioner
for Patent Examination Policy

---

[1] The request to apply the issue fee to the new Notice may be satisfied by completing and returning the new Issue Fee Transmittal Form PTOL-85(b), which includes the following language thereon: "Commissioner for Patents is requested to apply the Issue Fee and Publication Fee (if any) or re-apply any previously paid issue fee to the application identified above." Petitioner is advised that, whether a fee is indicated as being due or not, the Issue Fee Transmittal Form **must** be completed and timely submitted to avoid abandonment. Note the language in bold text on the first page of the Notice of Allowance and Fee(s) Due (PTOL-85).

SPE RESPONSE FOR CERTIFICATE OF CORRECTION

Paper No.: _____

DATE : 9/11/08

TO SPE OF : ART UNIT 2194 Li Zhen

SUBJECT : Request for Certificate of Correction for Appl. No.: 09/517366 Patent No.: 7398532

Please respond to this request for a certificate of correction within 7 days.

FOR IFW FILES:

Please review the requested changes/corrections as shown in the **COCIN** document(s) in the IFW application image. No new matter should be introduced, nor should the scope or meaning of the claims be changed.

Please complete the response (see below) and forward the completed response to scanning using document code **COCX**.

FOR PAPER FILES:

Please review the requested changes/corrections as shown in the attached certificate of correction. Please complete this form (see below) and forward it with the file to:

Certificates of Correction Branch (CofC)
South Tower - 9A22
Palm Location 7580

_____
Certificates of Correction Branch
703-308-9390 ext. _____

Thank You For Your Assistance

The request for issuing the above-identified correction(s) is hereby:
Note your decision on the appropriate box.

- ☒ **Approved** — **All** changes apply.
- ☐ **Approved in Part** — Specify below which changes **do not** apply.
- ☐ **Denied** — State the reasons for denial below.

Comments: _____

MENG-AI T AN
SUPERVISORY PATENT EXAMINER
TECHNOLOGY CENTER 2100

SPE — 2194 **Art Unit**

UNITED STATES PATENT AND TRADEMARK OFFICE
UNDER SECRETARY OF COMMERCE FOR
INTELLECTUAL PROPERTY AND
DIRECTOR OF THE UNITED STATES PATENT
AND TRADEMARK OFFICE
Washington, D.C. 20231

COPY MAILED

APR 17 2000

SPECIAL PROGRAMS OFFICE
DAC FOR PATENTS

PRAVEL HEWITT KIMBALL & KRIEGER
1177 W LOOP SOUTH
10TH FLOOR
HOUSTON, TX 77027-9095

In re Application of	:	
Paul L. Pool et al	:	DECISION GRANTING
Application No. 09/517,383	:	PETITION
Filed: March 26, 1998	:	
Attorney Docket No. D98020US	:	

This is a decision on the petition filed August 13, 1999, requesting that a divisional Continued Prosecution Application (CPA) allegedly filed on March 26, 1998 based on prior application No. 08/694,397, be treated as a divisional application under 37 CFR 1.53(b), rather than under 37 CFR 1.53(d), and be accorded a filing date of March 26, 1998.

Found among the papers accompanying the present petition is a copy of the divisional CPA request allegedly filed on March 26, 1998 indicating a correspondence address unchanged from that specified in prior application No. 08/694,397. Although the present petition is signed by the same registered practitioner whose signature appears on the copy of the divisional CPA request allegedly filed on March 26, 1998, the present petition suggests a new address for the registered practitioner.

Notwithstanding the above, a review of the present petition and all accompanying papers shows that **no change of correspondence address has been filed.** This decision is being mailed to the correspondence address designated in the prior application. In addition, a copy of this decision is being mailed to that address which the present petition suggests is the registered practitioner's new address.

Furthermore, **no power of attorney has been filed** for a divisional application based upon prior application No. 08/694,397. Therefore, in accordance with 37 CFR 1.33(a) and MPEP 403 *all further communications from the Office will be mailed to the post office address of the first inventor named in the copy of the prior declaration provided with the present petition, until an attorney is appointed or a proper change of correspondence address is filed.*

Petitioners allege that the original CPA request was filed in the U.S. Patent and Trademark Office (Office) on March 26, 1998, and

subsequently misplaced in the Office. In support, the petition is accompanied by a copy of petitioners' postcard receipt acknowledging receipt in the Office on March 26, 1998 of, inter alia, a "CPA Request Transmittal" (identified by attorney docket No. D98020US), a preliminary amendment, and a $395.00 check for the corresponding filing fee.

A review of the file of prior application No. 08/694,397 reveals that a divisional CPA request identified by attorney docket No. D98020US (hereafter, "divisional CPA request") cannot be located. However, the postcard evidence is convincing that the divisional CPA request was deposited on March 26, 1998, and subsequently misplaced in the Office. Although a complete specification and drawings did not accompany the divisional CPA request, the petition states that "[T]he application was meant to be filed under 37 CFR 1.53(b)."

Further review of the file of prior application No. 08/694,397 reveals that a request for a continuation CPA identified by attorney docket No. A96006US (hereafter, "continuation CPA request") based on prior application No. 08/694,397 was properly filed on March 26, 1998. The file also shows that the continuation CPA request has been entered in the file of prior application No. 08/694,397 and the express abandonment of the prior application has been recognized pursuant to 37 CFR 1.53(d)(2)(v). Only one CPA may be pending at one time based on the same prior nonprovisional application. See Changes to Patent Practice and Procedure; Training and Implementation Guide, Question and Answer 26 (December 1997). The continuation CPA request was accepted by the PTO as a proper CPA. Therefore, the divisional CPA request deposited on March 26, 1998, cannot be processed as a proper CPA.

The present petition filed by facsimile on August 13, 1999 was accompanied by, inter alia, a copy of the specification, drawings, and declaration from the prior application. Because those application papers were transmitted by facsimile, they are improper for an application under 37 CFR 1.53(b). See 37 CFR 1.6(d). On March 2, 2000, in a telephone communication from PTO Legal Advisor James Engel, a replacement copy of the application papers transmitted by facsimile on August 13, 1999 was requested. In response, on March 3, 2000, petitioners supplied a replacement copy of those application papers by mail.

In order to correct petitioners' filing error, on petition under 37 CFR 1.53(e), the divisional CPA request will be treated as a divisional application under 37 CFR 1.53(b) with a filing date of March 26, 1998.

The petition is granted. The $130.00 petition fee has been charged to deposit account No. 50-0259 as authorized in the petition.

The divisional application under 37 CFR 1.53(b) has been assigned application No. 09/517,383 using the application papers supplied on March 3, 2000 for examination purposes. The petition and all accompanying papers filed by facsimile on August 13, 1999 has been placed in the file of application No. 09/517,383 as well. All further correspondence concerning the divisional application filed on March 26, 1998, should be directed to application No. 09/517,383.

A $65.00 surcharge set forth in 37 CFR 1.16(e) for a small entity is required for the declaration filed with the present petition on August 13, 1999 (after the filing date of the above-identified application).

Accordingly, the $65.00 surcharge set forth in 37 CFR 1.16(e) for a small entity will be charged to applicant's deposit account No. 50-0259, as authorized in the March 26, 1998 divisional application filing.

After mailing of this decision, PTO records will be corrected to show that one of the two $395.00 filing fees paid on March 26, 1998, and the $130.00 petition fee paid on August 13, 1999, were paid in application No. 09/517,383, <u>not in application No. 08/694,397</u>.

The application will then be forwarded to Initial Patent Examination Division for further processing as a divisional application filed under 37 CFR 1.53(b), <u>not under 37 CFR 1.53(d)</u>, with a filing date of March 26, 1998, using the application papers supplied on March 3, 2000.

Any inquiries related to this decision should be directed to Legal Advisor James Engel at (703) 308-5106.

Eugenia Jones for

Fred Silverberg
Senior Legal Advisor
Office of Patent Legal Administration
Office of the Deputy Commissioner
for Patent Examination Policy

JJE

cc: Albert B. Kimball, Jr.
BRACEWELL & PATTERSON
711 Louisiana, Suite 2900
Houston, Texas 77002

UNITED STATES PATENT AND TRADEMARK OFFICE

Commissioner for Patents
United States Patent and Trademark Office
Washington, D.C. 20231
www.uspto.gov

Paper No. 5
COPY MAILED

SEP 1 5 2000

SPECIAL PROGRAMS OFFICE
DAC FOR PATENTS

PAUL J ESATTO JR
SCULLY SCOTT MURPHY & PRESSER
400 GARDEN CITY PLAZA
GARDEN CITY , NY 11530

In re Application of
Rastegar, *et al.*
Application No. 09/517,434
Filed: 03/02/2000
Attorney Docket No. 13285

DECISION GRANTING STATUS
UNDER 37 C.F.R. §1.47(a)

This is in response to the Petition Under 37 C.F.R. §1.47(a) filed on July 7, 2000.

The above-identified application was filed on March 2, 2000, naming Jahangir S. Rastegar, Farshad Khorrami, and Ronald Rothchild as joint inventors. However, the declaration was not signed by co-inventor Rothchild. Accordingly, a notice to file missing parts (hereinafter "the notice") was mailed to the address of record on May 8, 2000. Petitioner filed his response to the notice on July 7, 2000.

The above-identified application and papers have been reviewed and found in compliance with 37 C.F.R. §1.47(a). This application is hereby accorded Rule 1.47(a) status. As provided in Rule 1.47(a), this Office will forward notice of this application's filing to the non-signing inventor at the address given in the Declaration. Notice of the filing of this application will also be published in the Official Gazette.

This application will be returned to the Office of Initial Patent Examination for further processing.

Telephone inquiries regarding this decision should be directed to Petitions Attorney Scott Ledford at (703) 305-5593

Office of Petitions
Office of the Deputy Assistant Commissioner
for Patent Policy and Projects

UNITED STATES PATENT AND TRADEMARK OFFICE

Commissioner for Patents
United States Patent and Trademark Office
P.O. Box 1450
Alexandria, VA 22313-1450
www.uspto.gov

INVITROGEN CORPORATION
C/O INTELLEVATE
P.O. BOX 52050
MINNEAPOLIS MN 55402

COPY MAILED

JUN 06 2008

OFFICE OF PETITIONS

In re Application of	:	
Hartley et al.	:	
Application No. 09/517466	:	ON PETITION
Filing Date: 03/02/2000	:	
Attorney Docket Number:	:	
IVGN 223	:	

This is a decision on the petition under the unintentional provisions of 37 CFR 1.137(b), filed December 3, 2007, to revive the above-identified application. The delay in treating this petition is regretted.

The petition is **GRANTED**.

The application became abandoned for failure to timely file a reply within the meaning of 37 CFR 1.113 to the final Office action of March 22, 2007. The proposed reply required for consideration of a petition to revive must be a Notice of Appeal (and appeal fee required by 37 CFR 41.20(b)(2), an amendment that *prima facie* places the application in condition for allowance, a Request for Continued Examination and submission (37 CFR 1.114), or the filing of a continuing application under 37 CFR 1.53(b). See MPEP 711.03(c)(III)(A)(2). No extensions of time pursuant to the provisions of 37 CFR 1.136(a) were obtained. Accordingly, the date of abandonment of this application is June 23, 2007.

The petition satisfies the requirements of 37 CFR 1.137(b) in that petitioner has supplied (1) the reply in the form of a Request for Continued Examination (RCE) and fee (and the submission required by 37 CFR 1.114 (all filed November 13, 2007); (2) the petition fee; and (3) a proper statement of unintentional delay.

The application file does not indicate a change of address has been filed in this case, although the address given on the petition differs from the address of record. A change of address should be filed in this case in accordance with MPEP 601.03. A courtesy copy of this decision is being mailed to the address noted on the petition. However, until otherwise instructed, all future correspondence regarding this application will be mailed solely to the address of record.

Telephone inquiries concerning this decision should be directed to the undersigned at (571) 272-3232.

This application is being referred to Technology Center AU 1634 for processing of the RCE and for appropriate action by the Examiner in the normal course of business on the amendment submitted in accordance with 37 CFR 1.114.

Derek L. Woods
Attorney
Office of Petitions

CC: INVITROGEN CORPORATION
1600 FARADAY AVENUE
CARLSBAD, CA 92008

SPE RESPONSE FOR CERTIFICATE OF CORRECTION

Paper No.: _____

DATE : 02/23/10

TO SPE OF : ART UNIT 2625

SUBJECT : Request for Certificate of Correction for Appl. No 09/517563.: 6760470

Please respond to this request for a certificate of correction within 7 days.

FOR IFW FILES:

Please review the requested changes/corrections as shown in the **COCIN** document(s) in the IFW application image. No new matter should be introduced, nor should the scope or meaning of the claims be changed.

Please complete the response (see below) and forward the completed response to scanning using document code **COCX**.

FOR PAPER FILES:

Please review the requested changes/corrections as shown in the attached certificate of correction. Please complete this form (see below) and forward it with the file to:

Certificates of Correction Branch (CofC)

Should the change(s) Be made?

RoChaun Johnson
Certificates of Correction Branch
571 272-0470

Thank You For Your Assistance

The request for issuing the above-identified correction(s) is hereby:
Note your decision on the appropriate box.

- ☑ **Approved** — **All** changes apply.
- ☐ **Approved in Part** — Specify below which changes **do not** apply.
- ☐ **Denied** — State the reasons for denial below.

Comments: _____

SAMIR AHMED
SUPERVISORY PATENT EXAMINER
SPE

2624
Art Unit

UNITED STATES PATENT AND TRADEMARK OFFICE

COMMISSIONER FOR PATENTS
P.O. BOX 1450
ALEXANDRIA, VA 22313-1450
www.uspto.gov

JUL 23 2003

Paper No. 10

In re Application of
Jose R. Gonzalez-Martin *et al*
Application No. 09/517,714
Filed: March 2, 2000
Attorney Docket No. 29131.2241

: DECISION ON PETITION

This is a decision on the petition filed on July 30, 2002 by which petitioners request withdrawal of the holding that this application stands abandoned for failure to timely file a proper reply to the Office letter mailed on October 11, 2001. The petition is considered under 37 CFR 1.181 and no fee is required.

The petition is granted.

Petitioners allege that a timely reply to the Office letter in question was in fact filed. Petitioners support this allegation by including a copy of the reply, and a copy of a filing receipt for the reply which shows that the reply was received in the Office on January 28, 2002. In addition, the reply has a 37 CFR 1.8(a) certificate of mailing affixed thereto that is dated January 2, 2002. In view of this evidence, it is clear that the application is not abandoned.

Accordingly, the Notice of Abandonment is hereby vacated, the holding of abandonment is withdrawn, and the application is restored to pending status. The application is being forwarded to the examiner for action on the reply filed on January 28, 2002, certificate of mailing date January 2, 2002.

PETITION GRANTED.

E. Rollins-Cross, Director, Patent
Examining Groups 3710 and 3720

Snell & Wilmer LLP
One Arizona Center
400 East Van Buren
Phoenix, AZ 85004-2202

UNITED STATES PATENT AND TRADEMARK OFFICE

COMMISSIONER FOR PATENTS
UNITED STATES PATENT AND TRADEMARK OFFICE
WASHINGTON, D.C. 20231
www.uspto.gov

Paper No. 8

AKIN GUMP STRAUSS HAUER & FELD
ONE COMMERCE SQUARE
2005 MARKET STREET
SUITE 2200
PHILADELPHIA, PA 19103

COPY MAILED

FEB 03 2003

OFFICE OF PETITIONS

In re Application of	:	
Gotz Nowak et al	:	
Application No. 09/517,863	:	ON PETITION
Filed: March 3, 2000	:	
Attorney Docket No. 9282-010US(D1062US)	:	

This is a decision on the petition under 37 CFR 1.137(b), filed January 27, 2003, to revive the above-identified application.

The petition is **GRANTED**.

The above-identified application became abandoned for failure to reply in a timely manner to the non-final Office action mailed October 2, 2001, which set a shortened statutory period for reply of one (1) month. No extensions of time under the provisions of 37 CFR 1.136(a) were obtained. Accordingly, the above-identified application became abandoned on November 3, 2001.

Telephone inquiries concerning this decision should be directed to Wan Laymon at (703) 305-9282.

The application file is being forwarded to Technology Center AU 1632.

Wan Laymon
Petitions Examiner
Office of Petitions
Office of the Deputy Commissioner
for Patent Examination Policy

UNITED STATES PATENT AND TRADEMARK OFFICE

Commissioner for Patents
United States Patent and Trademark Office
P.O. Box 1450
Alexandria, VA 22313-1450
www.uspto.gov

ALLEN C TURNER
TRASK BRITT & ROSSA
P O BOX 2550
SALT LAKE CITY, UT 84110

COPY MAILED
MAY 19 2004
OFFICE OF PETITIONS

In re Application of	:	
Vogels, et al.	:	
Application No. 09/517,898	:	ON PETITION
Filed: March 3, 2000	:	
Attorney Docket No. 2578-3982.2US	:	

This is a decision on the petition under 37 CFR 1.137(b), filed April 1, 2004, to revive the above-identified application.

The petition is **GRANTED**.

This application became abandoned for failure to timely pay the issue fee on or before March 24, 2004. Accordingly, this application became abandoned on March 25, 2004.

This application is being forwarded to Technology Center 1600 for review of the "Amendment Under 37 CFR 1.312(a)," submitted February 27, 2004.

Telephone inquiries concerning this matter may be directed to the undersigned at (703) 306-9200.

Edward J. Tannouse
Petitions Attorney
Office of Petitions
United States Patent and Trademark Office

UNITED STATES PATENT AND TRADEMARK OFFICE

COMMISSIONER FOR PATENTS
UNITED STATES PATENT AND TRADEMARK OFFICE
P.O. BOX 1450
ALEXANDRIA, VA 22313-1450
www.uspto.gov

Paper No. 10

PATTI & BRILL
ONE NORTH LASALLE STREET
44TH FLOOR
CHICAGO, IL 60602

COPY MAILED
SEP 29 2003
OFFICE OF PETITIONS

In re Application of:
Krishna Balachandran, Subrahmanyam Dravida, Richard P. Ejzak, Sanjiv Nanda, Shiv Seth and Stanley Vitebsky
Application No.: 09/517,907
Filed: March 3, 2000
Title of Invention: METHOD AND DEVICE FOR MAC LAYER FEEDBACK IN A PACKET COMMUNICATION SYSTEM

DECISION REFUSING STATUS UNDER 37 CFR 1.47(a)

This is in response to a petition under 37 CFR 1.47(a), filed September 8, 2003, to allow the other inventor(s) to proceed with the application on behalf of himself or herself and the nonsigning inventor.

The petition is **dismissed**.

Rule 47 applicant is given TWO (2) MONTHS from the mailing date of this decision to reply, correcting the below-noted deficiencies. Any reply should be entitled "Request for Reconsideration of Petition Under 37 CFR 1.47(a)", and should only address the deficiencies noted below, except that the reply may include an oath or declaration executed by the non-signing inventor. Failure to respond will result in abandonment of the application. Any extensions of time will be governed by 37 CFR 1.136(a).

The above-identified application was filed on March 3, 2000, with a defective oath or declaration. Applicant was notified, of the deficiencies in the oath or declaration, *inter alia*, in an Office action mailed on June 5, 2003.

In response to the Office action, Applicant files the instant petition and Declaration and Power of Attorney. The petition avers that diligent effort was made to contact and request execution of the Oath or Declaration by the nonsigning inventors. In support of this assertion, the Declaration of

Laura A. Hernandez is filed with the petition. The Hernandez Declaration provides that the application, Assignment, and Declaration and Power of Atorney were sent via Federal Express to the nonsigning inventors last known address, but that the nonsigning inventors no longer lived at the last known addresses. The Hernandez Declaration also provides that a telephone number ewas the only forwarding information available for nonsigning inventor Sanjiv Nanda, but the telephone number had been disconnected. No forwarding information was available for nonsigning inventor Subrahmanyam Dravida.

A grantable petition under 37 CFR 1.47(a) requires: (1) proof that the non-signing inventor cannot be reached or refuses to sign the oath or declaration after having been presented with the application papers (specification, claims and drawings); (2) an acceptable oath or declaration in compliance with 35 U.S.C. §§ 115 and 116; (3) the petition fee; and (4) a statement of the last known address of the non-signing inventor. Applicant lacks item (1) and (2).

As to item (1), the petition states that the nonsigning inventor cannot be located.

Petitioner is advised that 37 CFR 1.47(a) provides for two separate and distinct circumstances: one where the inventor refuses to join the application after having been presented with the application for signature, and the other where an inventor cannot be found or reached after diligent effort.

If an inventor is unavailable (cannot be reached), while it is not required that the application be mailed, Petitioner must establish the exercise of diligent effort in trying to find or reach the nonsigning inventor. A statement of facts should be submitted that fully describes the exact facts which are relied on to establish that a *diligent effort* was made to locate the inventor. Emphasis supplied. See, MPEP § 409.03(d). At the very least, an Internet search, or a search of telephone directories should be undertaken of the regions where it is suspected the non-signing inventor may reside. Copies of the results of such searches must be referred to in any renewed petition. *It is important that the forthcoming communication*

contain statements of fact as opposed to conclusions. (Emphasis supplied).

As to item (2), Applicant has failed to provide an acceptable oath or declaration in compliance with 35 U.S.C. §§ 115 and 116. A review of the Declaration and Power of Attorney filed with the petition reveals that the page containing the signature provided for inventor Shiv Seth is unrelated to the Declaration and Power of attorney that the page has been attached to by a staple. The page, Notarized in the State of Illinois on August 25, 2003 as having "executed the foregoing instrument", is ambiguous as to exactly which foregoing instrument the signature refers to as putatively having been executed.

Page number seven of the Declaration and Power of Attorney filed with the Petition is missing. All of the page numbers in the Declaration and Power of Attorney filed with the instant petition are numbered at the top, save the page number containing the signature of inventor Shiv Seth. The page number containing inventor Shiv Seth, which is inserted into the Declaration and Power of Attorney where page seven apparently should be, is numbered at the bottom as page six. The Declaration and Power of Attorney filed with the petition contains a page six, numbered at the top of the page, consistent with the other pages of the Declaration and Power of Attorney. The next page following the page with inventor Shiv Seth's signature, contains the signature of inventor Stanley Vitbesky, and is numbered at the top as page eight.

Moreover, the page containing the signature of inventor Sviv Seth does not indicate that he in an inventor. The other pages of the Declaration and Power of Attorney indicate that each inventor is a joint inventor. It is therefore ambiguous at best that the page numbered page six at the bottom and executed by inventor Shiv Seth is part of the same Declaration and Power of Attorney filed with the instant petition, save a staple.

A properly executed oath or declaration is required.

Further correspondence with respect to this matter should be addressed as follows:

By mail: Mail Stop Petitions
Commissioner for Patents
PO Box 1450
Alexandria, VA 22313-1450

By FAX: (703) 308-6916
Attn: Office of Petitions

By hand: Crystal Plaza Four, Suite 3C23
2201 S. Clark Place
Arlington, VA 22202-3113

Telephone inquiries concerning this decision should be directed to the undersigned at (703) 305-0014.

Derek L. Woods
Petitions Attorney
Office of Petitions

UNITED STATES PATENT AND TRADEMARK OFFICE

COMMISSIONER FOR PATENTS
UNITED STATES PATENT AND TRADEMARK OFFICE
P.O. BOX 1450
ALEXANDRIA, VA 22313-1450
www.uspto.gov

Paper No. 14

PATTI & BRILL
ONE NORTH LASALLE STREET
44TH FLOOR
CHICAGO, IL 60602

COPY MAILED

NOV 21 2003

OFFICE OF PETITIONS

In re Application of: Krishna Balachandran, Subrahmanyam Dravida, Richard P. Ejzak, Sanjiv Nanda, Shiv Seth and Stanley Vitebsky Application No.: 09/517,907 Filed: March 3, 2000 Title of Invention: METHOD AND DEVICE FOR MAC LAYER FEEDBACK IN A PACKET COMMUNICATION SYSTEM	DECISION REFUSING STATUS UNDER 37 CFR 1.47(a)

This is in response to a Request for Reconsideration of Petition under 37 CFR 1.47(a), filed October 20, 2003, to allow the other inventor(s) to proceed with the application on behalf of himself or herself and the nonsigning inventor.

The petition is **granted**.

The above-identified application and papers have been reviewed and found in compliance with 37 CFR 1.47(a). This application is hereby accorded Rule 1.47(a) status.

Petitioner has shown that the non-signing inventors, Subrahmanyam Dravida and Sanjiv Nanda, cannot be found or reached after diligent effort.

As provided in Rule 1.47(a), this Office will forward notice of this application's filing to the non-signing inventors at the addresses given in the Petition. Notice of the filing of this application will also be published in the Official Gazette.

The Declaration/Power of Attorney has been entered and made of record.

The application file is being returned to the Office of Initial Patent Examination for continued processing.

Telephone inquiries related to this decision may be directed to the undersigned at (703) 305-0014.

Derek L. Woods
Petitions Attorney
Office of Petitions

UNITED STATES PATENT AND TRADEMARK OFFICE

COMMISSIONER FOR PATENTS
UNITED STATES PATENT AND TRADEMARK OFFICE
P.O. BOX 1450
ALEXANDRIA, VA 22313-1450
www.uspto.gov

Subrahmanyam Dravida
25 Drumlin Hill Road
Groton, MA 01450

COPY MAILED
NOV 21 2003
OFFICE OF PETITIONS

In re Application of: :
Krishna Balachandran, Subrahmanyam :
Dravida, Richard P. Ejzak, :
Sanjiv Nanda, Shiv Seth and :
Stanley Vitebsky : LETTER
Application No.: 09/517,907 :
Filed: March 3, 2000 :
Title of Invention: METHOD AND :
DEVICE FOR MAC LAYER FEEDBACK IN A :
PACKET COMMUNICATION SYSTEM :

Dear Mr. Dravida:

You are named as a joint inventor in the above-identified United States patent application filed under the provisions of 35 U.S.C. 116 (United States Code) and 37 CFR 1.47(a), Rules of Practice in Patent Cases. Should a patent be granted on the application you will be designated therein as a joint inventor.

As a named inventor you are entitled to inspect any paper in the file wrapper of the application, order copies of all or any part thereof (at a prepaid cost per 37 CFR 1.19) or make your position of record in the application. Alternatively, you may arrange to do any of the preceding through a registered patent attorney or agent presenting written authorization from you. If you care to join the application, counsel of record (see below) would presumably assist you. Joining in the application would entail the filing of an appropriate oath or declaration by you pursuant to 37 CFR 1.63.

Telephone inquiries regarding this communication should be directed to the undersigned at (703) 305-0014. Requests for information regarding your application should be directed to the File Information Unit at (703) 308-2733. Information regarding how to pay for and order a copy of the application, or a specific paper in the application, should be directed to Certification Division at (703) 308-9726 or 1-800-972-6382 (outside the Washington D.C. area).

Derek L. Woods
Petitions Attorney
Office of Petitions

CC: PATTI & BRILL
ONE NORTH LASALLE STREET
44TH FLOOR
CHICAGO, IL 60602

UNITED STATES PATENT AND TRADEMARK OFFICE

COMMISSIONER FOR PATENTS
UNITED STATES PATENT AND TRADEMARK OFFICE
WASHINGTON, D.C. 20231
www.uspto.gov

MAIL

Paper No. 8

FISH & RICHARDSON P.C.
225 Franklin Street
Boston, MA 02110-2804

JUN 0 2 2003

DIRECTOR OFFICE
TECHNOLOGY CENTER 2100

In re Application of: David Critz, et al.	)	
Application No.: 09/517,952	)	
Filed: March 03, 2000	)	DECISION ON REQUEST FOR
For: INSTRUMENTING STREAMED	)	WITHDRAWAL AS ATTORNEY
CLASSES	)	

This is a decision on the Request To Withdraw from Representation filed May 22, 2003.

A grantable request to withdraw as attorney of record should indicate thereon the present mailing addresses of the attorney(s) who is/are withdrawing from the record and of the applicant. The request for withdrawal must be signed by every attorney seeking to withdraw or contain a clear indication that one attorney is signing on behalf of another/others. A request to withdraw will not be approved unless at least 30 (thirty) days would remain between the date of approval and the later of the expiration date of a time to file a response or the expiration date of the maximum time period which can be extended under 37 C.F.R. § 1. 136(a). The effective date of withdrawal being the date of decision and not the date of request. See M.P.E.P. § 402.06. 37 C.F.R. § 1.36 further requires that the applicant or patent owner be notified of the withdrawal of the attorney or agent.

The request is GRANTED.

All future communications from the Office will be directed to the below-listed address until otherwise notified by applicant. This correspondence address is provided by the withdrawn attorney(s). Applicant is reminded of the obligation to promptly notify the Patent and Trademark Office (Office) of any change in correspondence address to ensure receipt of all communications from the Office.

Vincent N. Trans
Special Programs Examiner
Technology Center 2100
Computer Architecture and Software
(703) 305-9750

cc: Thomas V. Smurzynski, Esq.
Lahive & Cockfield LLP
28 State Street
Boston, MA 02109-1784

UNITED STATES PATENT & TRADEMARK OFFICE

UNDER SECRETARY OF COMMERCE FOR INTELLECTUAL PROPERTY AND DIRECTOR OF THE UNITED STATES PATENT AND TRADEMARK OFFICE
Washington, D.C. 20231

Briggs and Morgan, P.A.
2400 IDS Center
80 South Eighth Street
Minneapolis, MN 55402

MAILED

SEP 13 2002

DIRECTOR'S OFFICE
TECHNOLOGY CENTER 3600

Paper No. 15

In re application of
Steven V. Larson
Application No. 09/517,974
Filed: March 3, 2000
For: DOOR AND FRAME FOR AIR HANDLING UNIT

DECISION ON PETITION TO MAKE SPECIAL (INFRINGEMENT)

This is a decision on the petition under 37 C.F.R § 1.102(d) filed August 13, 2002 to make the above-identified application special.

The petition requests that the above-identified application be made special under the procedure set forth in M.P.E.P. § 708.02, item II: Infringement.

MPEP 708.02 states that a Petition to Make Special based on Infringement must have the following: (1) the appropriate petition fee under 37 CFR 1.17(i); (2) a statement by the assignee, applicant, or attorney alleging: (A) that there is an infringing device or product actually on the market; (B) that a rigid comparison of the alleged infringing device or product with the claims of the application has been made, and that, in his or her opinion, some of the claims are unquestionably infringed; and (C) that he or she has made a careful and thorough search of the prior art, or has good knowledge of the prior art, and has sent a copy of the references deemed most closely related to the subject matter encompassed by the claims.

The petition filed August 13, 2002 includes all of the requirements above and, therefore, the petition is **GRANTED**.

The examiner is directed (1) to make an interference search for possible interfering applications; (2) to promptly examine this application out of turn; and (3) if any interfering application is discovered,

to examine such application simultaneously and state in the first official letter of such application that it is being taken out of turn because of a possible interference.

Petitioner is advised that this application will continue to be special, throughout its entire prosecution and pendency, including interference and appeal, if any, only if petitioner makes a prompt *bona fide* effort, in response to each Office action, to place the application in condition for allowance, even if it is necessary to conduct an interview with the examiner to accomplish this purpose.

Kenneth J. Dorner
Special Programs Examiner
Technology Center 3600
(703)308-0866

kjd: 9/5/02

UNITED STATES PATENT AND TRADEMARK OFFICE

Commissioner for Patents
United States Patent and Trademark Office
P.O. Box 1450
Alexandria, VA 22313-1450
www.uspto.gov
DIW 09-04

Paper No. 14

HOGAN & HARTSON LLP
IP GROUP, COLUMBIA SQUARE
555 THIRTEENTH STREET, N.W.
WASHINGTON DC 20004

COPY MAILED

SEP 3 0 2004

OFFICE OF PETITIONS

In re Application of	:	
Boyd et al.	:	
Application No. 09/517,983	:	ON PETITION
Filed: 3 March, 2000	:	
Attorney Docket No. 82001-0313	:	

This is a decision on the petition, styled under 37 CFR 1.47(a) and filed on 8 Decenber, 2003, which is being treated as a petition under 37 CFR 1.183 seeking waiver of 37 CFR §§ 1.67 and 1.63 where they require that a supplemental declaration be executed by the named inventor.[1]

The Office apologizes for the delay in responding to the present petition.

The petition is **dismissed**.

Any request for reconsideration of this decision must be submitted within TWO (2) MONTHS from the mail date of this decision. Extensions of time under 37 CFR 1.136(a) are permitted. **FAILURE TO TIMELY RESPOND WILL RESULT IN ABANDONMENT OF THE APPLICATION.** The reconsideration request should include a cover letter entitled "Renewed Petition Under 37 CFR 1.183."

This application was filed on 3 March, 2000. On 5 June, 2000, a declaration was filed naming Dean Boyd, Mike Gordon, Jorgen Andersson, Chia-Hung Tai, Feng Yang, Anapuma Kolamala, Greg Cook, Thomas Guardino, Mudita Purang, Prabhakar Krishnamurthy, Mark

[1] Once an application has received a fully executed oath or declaration and been placed on the files for examination, the provisions of 37 CFR 1.47 no longer apply. Rather, the remedy for treating an inventor's refusal to also sign a supplemental oath or declaration is waiver of 37 CFR 1.67. See MPEP 603.

Cooke, Ravi Nandiwada, Brian Montiero, and Steve Haas as joint inventors.

On 6 June, 2003, a non-final Office action was mailed, requiring, *inter alia*, a new oath or declaration signed by all of the inventors because the original oath or declaration contained non-initialed and/or non-dated alterations.[2] A three (3)-month shortened statutory period for reply was specified.

In response, on 8 December, 2003, the present petition was filed, accompanied by a three (3) month extension of time, an amendment, and an oath or declaration submitted in compliance with 37 CFR 1.63 and 1.67 naming Boyd et al. as joint inventors and signed by all joint inventors except Boyd, Andersson, Yang, Kolamala, Cook, and Guardino. Petitioners further state that a copy of the declaration and application was sent to joint inventors Yang and Andersson, but that the declaration was returned as undeliverable.

Suspension of the rules under 37 CFR 1.183 may be granted in an "extraordinary situation, when justice requires." The facts presented on the record do not adequately establish an extraordinary situation. Petitioner has not sufficiently established any special circumstances of equities that would require suspension of the rules in the interests of justice.

There is no requirement for a showing under 37 CFR 1.47, as noted above. This application bears an original Declaration executed by both joint inventors, and thus, the provisions of 37 CFR 1.47 do not apply in this instance. Nevertheless, it is appropriate to apply the principles thereof to the situation at hand.

Petitioners' showing is deficient in that proof of diligent efforts to locate the non-signing inventor have not been made.[3] Specifically, if the letter containing the declaration was refused or returned as undeliverable, petitioners should provide a copy of the envelope showing that the letter sent to the last known address of the non-signing inventor was returned as undeliverable by the post office. Details of the efforts made to locate the non-signing inventor should be set forth in an affidavit or declaration of facts having first-hand knowledge of the details.

---

[2] 37 CFR 1.52(c).

[3] MPEP 409.03(d).

Additionally, no showing has been made with regard to non-signing inventors Boyd, Kolamala, and Cook. If petitioners wish to have the supplemental declaration accepted without their signatures, petitioners must provide a showing as stated above with regard to those inventors as well.

Further correspondence with respect to this matter should be addressed as follows:

By mail: Mail Stop Petition
Commissioner for Patents
P.O. Box 1450
Alexandria, VA 22313-1450

By FAX: (703) 872-9306
Attn: Office of Petitions

By hand: U.S. Patent and Trademark Office
220 20th Street S.
Customer Window, Mail Stop Petition
Crystal Plaza 2, Lobby, Room 1B03
Arlington, VA 22202

Telephone inquiries concerning this matter may be directed to the undersigned at 571-272-3231.

D Wood

Douglas I. Wood
Senior Petitions Attorney
Office of Petitions

UNITED STATES PATENT AND TRADEMARK OFFICE

Commissioner for Patents
United States Patent and Trademark Office
P.O. Box 1450
Alexandria, VA 22313-1450
www.uspto.gov
bfw 01-05

HOGAN & HARTSON LLP
IP GROUP, COLUMBIA SQUARE
555 THIRTEENTH STREET, N.W.
WASHINGTON DC 20004

COPY MAILED

JAN 1 2 2005

OFFICE OF PETITIONS

In re Application of	:	
Boyd et al.	:	
Application No. 09/517,983	:	ON PETITION
Filed: 3 March, 2000	:	
Attorney Docket No. 82001-0313	:	

This is a decision on the renewed petition, styled under 37 CFR 1.47(a) and 1.183, filed on 30 November, 2004, which is being treated as a petition under 37 CFR 1.183 seeking waiver of 37 CFR §§ 1.67 and 1.63 where they require that a supplemental declaration be executed by the named inventor.[1]

The petition is **granted**.

In view of the efforts recounted in the petition to obtain the signatures of Dean Boyd, Jorgen Andersson, Feng Yang, Anapama Kolamala, Greg Cook, and Thomas Guardino, it is agreed that justice would be served by waiving the requirement for their signatures on the supplemental declaration filed on 8 December, 2003.

The aforementioned supplemental declaration has been accepted, on petition, and placed in the file.

The petition fee paid with the present request for reconsideration is unnecessary and will be credited to counsel's deposit account, No. 50-1349.

---

[1] Once an application has received a fully executed oath or declaration and been placed on the files for examination, the provisions of 37 CFR 1.47 no longer apply. Rather, the remedy for treating an inventor's refusal to also sign a supplemental oath or declaration is waiver of 37 CFR 1.67. See MPEP 603.

The application is being referred to Technology Center Art Unit 3628 for further processing.

Telephone inquiries concerning this matter may be directed to the undersigned at 571-272-3231.

DWood

Douglas I. Wood
Senior Petitions Attorney
Office of Petitions

UNITED STATES PATENT AND TRADEMARK OFFICE

COMMISSIONER FOR PATENTS
UNITED STATES PATENT AND TRADEMARK OFFICE
P.O. BOX 1450
ALEXANDRIA, VA 22313-1450
www.uspto.gov

MAIL

MAY 6 2005

DIRECTOR OFFICE
TECHNOLOGY CENTER 2600

LAW OFFICES OF DOUGLAS W RUDY LLC
14614 NORTH KIERLAND BLVD
SUITE 300
SCOTTSDALE AZ 85254

In re Application of)
Jerome H. Lemelson)
Application No. 09/517,993)
Filed: March 3, 2000)
For: **SYSTEM AND METHOD FOR ENHANCING SPEECH INTELLLIGIBILITY FOR THE HEARING IMPAIRED**)

DECISION ON REQUEST TO WITHDRAW FROM RECORD

This is a decision on the Request for Withdrawal as attorney or agent and change of address filed on February 25, 2005.

A grantable request to withdraw, as attorney/agent of record must:
(1) Indicate the present mailing address of the attorney(s)/agent(s) who seek(s) to withdraw, and
(2) Be signed by each attorney/agent seeking to withdraw or clearly be signed on their behalf, and
(3) Be *approved* at least thirty (30) days prior to the maximum extendable period for response to any outstanding Office Action, and
(4) Indicate the address to which future correspondence should be mailed.

Petitioner has met all of the above. Accordingly, the request is **GRANTED**.

Peter C. Warner has been withdrawn from the record. The correspondence address was not changed in the request.

All future communications from the Office will be directed to the address listed above until otherwise notified by applicant. Applicant is reminded of the obligation to promptly notify the Patent and Trademark Office of any change in correspondence address to ensure receipt of all communications from the Office.

Kenneth Wieder
Special Program Examiner
Technology Center 2600
Communications
(571) 272-2986

The opinion in support of the decision being entered today was ***not*** written for publication is ***not*** binding precedent of the Board.

MAILED

APR 2 2 2005

U.S. PATENT AND TRADEMARK OFFICE
BOARD OF PATENT APPEALS
AND INTERFERENCES

UNITED STATES PATENT AND TRADEMARK OFFICE

BEFORE THE BOARD OF PATENT APPEALS
AND INTERFERENCES

Ex parte ELLIOT A. GOTTFURCHT, GRANT GOTTFURCHT, & ALBERT-MICHEL LONG

Appeal No. 2005-0926
Application 09/518,015

DECISION ON PETITION

This is in response to the petition filed August 23, 2004, requesting that the above identified application be granted Special Status under M.P.E.P. Section 708.02 IV.

The petition has been considered and found to comply with all the requirements set forth under M.P.E.P. Section 708.02 IV. Accordingly, the petition is granted.

PETITION GRANTED

By: Gary V. Harkcom

Gary V. Harkcom
Acting Chief Administrative Patent Judge
BOARD OF PATENT APPEALS
AND INTERFERENCES
571-272-9797

MORRISON & FOERSTER, LLP
1650 Tysons Blvd. Suite 300
McLean, VA 22102

UNITED STATES PATENT AND TRADEMARK OFFICE

Commissioner for Patents
United States Patent and Trademark Office
P.O. Box 1450
Alexandria, VA 22313-1450
www.uspto.gov

Paper No.

Thomas E. Ciotti
MORRISON & FOERSTER LLP
1650 Tysons Boulevard
Suite 300
McLean, VA 22102

MAILED

JAN 2 5 2006

TECHNOLOGY CENTER 2100

In re Application of:
Eillot A. Gottfurcht.
Application No. 09/518,015
Filed: March 3, 2000
For: NAVIGATING INTERNET CONTENT ON A TELEVISION USING A SIMPLIFIED INTERFACE AND A REMOTE CONTROL

DECISION ON REQUEST TO WITHDRAW AS ATTORNEY OR AGENT

This is a decision on the Request To Withdraw from Representation filed December 9, 2005.

A grantable request to withdraw as attorney of record should indicate thereon the present mailing addresses of the attorney(s) who is/are withdrawing from the record and of the applicant. The request for withdrawal must be signed by every attorney seeking to withdraw or contain a clear indication that one attorney is signing on behalf of another/others. A request to withdraw will not be approved unless at least 30 (thirty) days would remain between the date of approval and the later of the expiration date of a time to file a response or the expiration date of the maximum time period which can be extended under 37 C.F.R. ∋ 1. 136(a). The effective date of withdrawal being the date of decision and not the date of request. See M.P.E.P. ∋ 402.06. 37 C.F.R. ∋ 1.36 further requires that the applicant or patent owner be notified of the withdrawal of the attorney or agent.

The request filed December 9, 2005 meets all the requirements. Accordingly the request is **GRANTED**.

All future communications from the Office will be directed to the below-listed address until otherwise notified by applicant. This correspondence address is provided by the withdrawn attorney(s). Applicant is reminded of the obligation to promptly notify the Patent and Trademark Office (Office) of any change in correspondence address to ensure receipt of all communications from the Office.

for James R. Matthews

Vincent N. Trans
Special Program Examiner
Technology Center 2100
Computer Architecture, Software, and
Information Security
(571) 272-3613

cc: Scott W. Doyle, Esq.
STEPTOE & JOHNSON LLP
1330 Connecticut Avenue, NW
Washington, DC 20036

UNITED STATES PATENT AND TRADEMARK OFFICE

Commissioner for Patents
United States Patent and Trademark Office
P.O. Box 1450
Alexandria, VA 22313-1450
www.uspto.gov

STEPTOE and JOHNSON LLP
1330 Connecticut Avenue, NW
WASHINGTON, DC 20036

COPY MAILED

JUL 20 2007

OFFICE OF PETITIONS

In re Patent No. 7,020,845 :

Issue Date: March 28, 2006 :

Application No. 09/518,015 : ON PETITION

Filed: March 3, 2000 :

Attorney Docket No. 004346.P001X

This is a decision on the petition filed April 9, 2007, which is being treated as a request under 37 CFR 3.81(b)[1] to add the assignees on the front page of the above-identified patent by way of a Certificate of Correction.

The request is **granted**.

The power of attorney filed January 5, 2007, is noted but cannot be entered because it is signed by only one of the named assignees and is not accompanied by a certificate under 37 CFR 3.73(b). Although a courtesy copy of this decision is being mailed to the address cited on the petition. All future correspondence will be mailed solely to the address of record until appropriate written instructions to the contrary are received.

Telephone inquiries concerning this matter may be directed to the undersigned at (571) 272-3222. Any questions concerning the issuance of the Certificate of Correction should be directed to the Certificate of Correction Branch at (703) 305-8309.

The file is being forwarded to the Certificate of Correction Branch for issuance of the requested Certificate of Correction.

Kenya A. McLaughlin
Petitions Attorney
Office of Petitions

Cc:
Jonathan S. Miller
Blakely, Sokoloff Taylor & Zafman
12400 Wilshire Boulevard, 7th Floor
Los Angeles, CA 90025-1026

[1] See *Official Gazette* of June 22, 2004.

UNITED STATES PATENT AND TRADEMARK OFFICE

Commissioner for Patents
United States Patent and Trademark Office
P.O. Box 1450
Alexandria, VA 22313-1450
www.uspto.gov

SUGHRUE MION ZINN MACPEAK & SEAS PLLC
2100 PENNSYLVANIA AVENUE NW
WASHINGTON, DC 20037-3202

COPY MAILED

AUG 0 9 2005

OFFICE OF PETITIONS

In re Application of :
Tatsuro Akabane, et al. :
Application No. 09/518,099 :
Filed: March 3, 2000 :
Attorney Docket No. Q58148 :

ON PETITION

This is a decision on the petition under 37 CFR 1.137(b), filed June 27, 2005, to revive the above-identified application.

The petition is **GRANTED.**

The above-identified application became abandoned for failure to submit the issue fee in a timely manner in reply to the Notice of Allowance mailed February 23, 2005, which set a statutory period for reply of three (3) months. Accordingly, the above-identified application became abandoned on May 24, 2005.

The petition satisfies the conditions for revival pursuant to the provisions of 37 CFR 1.137(b) in that (1) the reply in the form of payment of the issue fee; (2) the petition fee; and (3) the required statement of unintentional delay have been received. Accordingly, the issue fee is accepted as having been unintentionally delayed.

Telephone inquiries concerning this decision should be directed to the undersigned at (571) 272-3229.

This application matter is being forwarded to the Publishing Division for further processing.

Retta Williams

Retta Williams
Petitions Examiner
Office of Petitions
Office of the Deputy Commissioner
for Patent Examination Policy

UNITED STATES PATENT AND TRADEMARK OFFICE

COMMISSIONER FOR PATENTS
UNITED STATES PATENT AND TRADEMARK OFFICE
WASHINGTON, D.C. 20231
www.uspto.gov

Paper No. 11

MAIL

JUN 2 7 2003

DIRECTOR OFFICE
TECHNOLOGY CENTER 2100

Fish & Richardson P.C.
225 Franklin Street
Boston, MA 02110-2804

In re Application of: David A. Foti, et al.	)	
Application No. 09/518,287	)	
Filed: March 3, 2000	)	
For: METHOD AND SYSTEM FOR ACCESSING EXTERNALLY-DEFINED OBJECTS FROM AN ARRAY-BASED MATHEMATICAL COMPUTING ENVIRONMENT	)	**DECISION ON REQUEST FOR WITHDRAWAL AS ATTORNEY**

This is a decision on the Request To Withdraw from Representation filed June 11, 2003.

A grantable request to withdraw as attorney of record should indicate thereon the present mailing addresses of the attorney(s) who is/are withdrawing from the record and of the applicant. The request for withdrawal must be signed by every attorney seeking to withdraw or contain a clear indication that one attorney is signing on behalf of another/others. A request to withdraw will not be approved unless at least 30 (thirty) days would remain between the date of approval and the later of the expiration date of a time to file a response or the expiration date of the maximum time period which can be extended under 37 C.F.R. § 1. 136(a). The effective date of withdrawal being the date of decision and not the date of request. See M.P.E.P. § 402.06. 37 C.F.R. § 1.36 further requires that the applicant or patent owner be notified of the withdrawal of the attorney or agent.

The request is **GRANTED**.

All future communications from the Office will be directed to the below-listed address until otherwise notified by applicant. This correspondence address is provided by the withdrawn attorney(s). Applicant is reminded of the obligation to promptly notify the Patent and Trademark Office (Office) of any change in correspondence address to ensure receipt of all communications from the Office.

for Vincent N. Trans
Special Programs Examiner
Technology Center 2100
Computer Architecture and Software
(703) 305-9750

cc: Thomas V. Smurzynski, Esq.
Lahive & Cockfield LLP
28 State Street
Boston, MA 02109-1784

UNITED STATES PATENT AND TRADEMARK OFFICE

COMMISSIONER FOR PATENTS
UNITED STATES PATENT AND TRADEMARK OFFICE
WASHINGTON, D.C. 20231
www.uspto.gov

MAIL

Paper No. 12

JUN 1 3 2003

DIRECTOR OFFICE
TECHNOLOGY CENTER 2100

FISH & RICHARDSON P.C.
225 Franklin Street
Boston, MA 02110-2804

In re Application of: David A. FOTI	)	
Application No. 09/518,288	)	
Filed: March 3, 2000	)	**DECISION ON REQUEST FOR**
For: METHOD AND SYSTEM FOR	)	**WITHDRAWAL AS ATTORNEY**
ACCESSING OBJECTS DEFINED	)	
WITHIN AN EXTERNAL OBJECT-	)	
ORIENTED ENVIRONMENT	)	

This is a decision on the Request To Withdraw from Representation filed June 2, 2003.

A grantable request to withdraw as attorney of record should indicate thereon the present mailing addresses of the attorney(s) who is/are withdrawing from the record and of the applicant. The request for withdrawal must be signed by every attorney seeking to withdraw or contain a clear indication that one attorney is signing on behalf of another/others. A request to withdraw will not be approved unless at least 30 (thirty) days would remain between the date of approval and the later of the expiration date of a time to file a response or the expiration date of the maximum time period which can be extended under 37 C.F.R. § 1. 136(a). The effective date of withdrawal being the date of decision and not the date of request. See M.P.E.P. § 402.06. 37 C.F.R. § 1.36 further requires that the applicant or patent owner be notified of the withdrawal of the attorney or agent.

The request is **GRANTED**.

All future communications from the Office will be directed to the below-listed address until otherwise notified by applicant. This correspondence address is provided by the withdrawn attorney(s). Applicant is reminded of the obligation to promptly notify the Patent and Trademark Office (Office) of any change in correspondence address to ensure receipt of all communications from the Office.

Vincent N. Trans
Special Programs Examiner
Technology Center 2100
Computer Architecture and Software
(703) 305-9750

cc: Thomas V. Smurzynski, Esq.
Lahive & Cockfield LLP
28 State Street
Boston, MA 02109-1784

SPE: M. Smith

SPE RESPONSE FOR CERTIFICATE OF CORRECTION

Paper No.: _____

DATE : 8/4/07

TO SPE OF : ART UNIT 2823

SUBJECT : Request for Certificate of Correction for Appl. No.: 09/518,293 Patent No.: 6287942

Please respond to this request for a certificate of correction within 7 days.

Please review the requested changes/corrections as shown in the **COCIN** document(s) in the IFW application image. No new matter should be introduced, nor should the scope or meaning of the claims be changed.

Please complete the response (see below) and forward the completed response to scanning using document code **COCX**.

Lamonte M. Newsome
Certificates of Correction Branch
703-308-9390 ext. 112

Thank You For Your Assistance

The request for issuing the above-identified correction(s) is hereby:
Note your decision on the appropriate box.

- ☐ **Approved** — All changes apply.
- ☒ **Approved in Part** — Specify below which changes **do not** apply.
- ☐ **Denied** — State the reasons for denial below.

Comments: All are approved with the exceptions of: (1) col. 4, line 46 and (2) col. 5, line 41.

(1) should read delete "layer 30 of" and after "glass" insert --coating 30--.

(2) Should read before "coating" insert --glass--.

Marina Tsoul — SPE

2823 — Art Unit

UNITED STATES PATENT AND TRADEMARK OFFICE

Commissioner for Patents
United States Patent and Trademark Office
P.O. Box 1450
Alexandria, VA 22313-1450
www.uspto.gov

C. IRVIN MCCLELLAND
OBLON, SPIVAK, MCCLELLAND, MAIER &
NEUSTADT, P.C.
1940 DUKE STREET
ALEXANDRIA VA 22314

COPY MAILED

DEC 0 4 2006

OFFICE OF PETITIONS

ON PETITION

In re Application of :
Hisato Shima et al :
Application No. 09/518,403 :
Filed: March 3, 2000 :
Attorney Docket No. SONY-C7751 :

This is a decision on the petition, filed December 1, 2006, under 37 CFR 1.313(c)(2) to withdraw the above-identified application from issue after payment of the issue fee.

The petition is **GRANTED.**

The above-identified application is withdrawn from issue for consideration of a submission under 37 CFR 1.114 (request for continued examination). See 37 CFR 1.313(c)(2).

Petitioner is advised that the issue fee paid on July 5, 2006 in the above-identified application cannot be refunded. If, however, the above-identified application is again allowed, petitioner may request that it be applied towards the issue fee required by the new Notice of Allowance.[1]

Telephone inquiries should be directed to the undersigned at (571) 272-3208.

The examiner of Technology Center AU 2621 will consider the request for continued examination under 37 CFR 1.114.

Karen Creasy

Karen Creasy
Petitions Examiner
Office of Petitions

---

[1] The request to apply the issue fee to the new Notice may be satisfied by completing and returning the new Issue Fee Transmittal Form PTOL-85(b), which includes the following language thereon: "Commissioner for Patents is requested to apply the Issue Fee and Publication Fee (if any) or re-apply any previously paid issue fee to the application identified above." Petitioner is advised that, whether a fee is indicated as being due or not, the Issue Fee Transmittal Form **must** be completed and timely submitted to avoid abandonment. Note the language in bold text on the first page of the Notice of Allowance and Fee(s) Due (PTOL-85).

UNITED STATES PATENT AND TRADEMARK OFFICE

Commissioner for Patents
United States Patent and Trademark Office
P.O. Box 1450
Alexandria, VA 22313-1450
www.uspto.gov

Flehr Hohbach Test Albritton & Herbert LLP
Four Embarcadero Center
Suite 3400
San Francisco, CA 94111-4187

MAILED

NOV 0 5 2004

Technology Center 2100

In re Application of:
Govindaraju GNANASIVAN, et al.
Application No. 09/518,551
Filed: March 3, 2000
For: APPARATUS AND METHOD FOR IMPLEMENTING RAID DEVICES IN A CLUSTER COMPUTER SYSTEM

DECISION ON REQUEST TO WITHDRAW AS ATTORNEY OR AGENT

This is a decision on the Request to Withdraw from Representation filed September 14, 2004.

A grantable request to withdraw as attorney of record should indicate thereon the present mailing addresses of the attorney(s) who is/are withdrawing from the record and of the applicant. The request for withdrawal must be signed by every attorney seeking to withdraw or contain a clear indication that one attorney is signing on behalf of another/others. A request to withdraw will not be approved unless at least 30 (thirty) days would remain between the date of approval and the later of the expiration date of a time to file a response or the expiration date of the maximum time period which can be extended under 37 C.F.R. § 1.136(a). The effective date of withdrawal being the date of decision and not the date of request. See M.P.E.P. § 402.06. 37 C.F.R. § 1.36 further requires that the applicant or patent owner be notified of the withdrawal of the attorney or agent.

The request is **GRANTED**.

Because there was no request for a correspondence address change, all future communications from the U.S. Patent and Trademark Office (Office) ***will continue to be*** addressed to the above-mentioned address until further notice. Applicant is reminded of the obligation to provide the Office with any change of correspondence address to ensure receipt of all correspondence.

For Vincent N. Trans
Special Program Examiner
Technology Center 2100
Computer Architecture, Software, and
Information Security
703-305-9750

UNITED STATES PATENT AND TRADEMARK OFFICE

Commissioner for Patents
United States Patent and Trademark Office
Washington, D.C. 20231
www.uspto.gov

Paper No. 18

KNOBBE MARTENS OLSON & BEAR LLP
2040 MAIN STREET
FOURTEENTH FLOOR
IRVINE, CA 92614

COPY MAILED

APR 0 1 2003

OFFICE OF PETITIONS

ON PETITION

In re Application of :
Jacob Vroman :
Application No. 09/518,554 :
Filed: March 3, 2000 :
Attorney Docket No. AIP-001US1 :

This is a decision on the petition, filed March 31, 2003, under 37 CFR 1.313(c)(2) to withdraw the above-identified application from issue after payment of the issue fee.

The petition is **GRANTED**.

The above-identified application is withdrawn from issue for consideration of a submission under 37 CFR 1.114 (request for continued examination). See 37 CFR 1.313(c)(2).

There is no indication that petitioner herein, Mr. Robert McIsaac, was ever given a power of attorney in this application. However, in accordance with 37 CFR 1.34(a), the signature of Mr. Robert McIsaac appearing on the correspondence shall constitute a representation to the United States Patent and Trademark Office that he is authorized to represent the particular party in whose behalf he acts. If petitioner herein was never given a power of attorney in the instant application, the appropriate power of attorney documentation should be submitted if Mr. McIsaac desires to receive future correspondence regarding this file. A courtesy copy of this decision is being mailed to Mr. McIsaac. However, all future correspondence herein will be directed solely to the above-noted address of record.

Petitioner is advised that the issue fee paid on March 1, 2002 in the above-identified application cannot be refunded. If, however, the above-identified application is again allowed, petitioner may request that it be applied towards the issue fee required by the new Notice of Allowance.[1]

---

[1] The request to apply the issue fee to the new Notice may be satisfied by completing and returning the new Issue Fee Transmittal Form PTOL-85(b), which includes the following language thereon: "Commissioner for Patents is requested to apply the Issue Fee and Publication Fee (if any) or re-apply any previously paid issue fee to the application identified above." Petitioner is advised that,

Telephone inquiries should be directed to the undersigned at (703) 305-8680.

Upon receipt of the file in the Office of Petitions, the file will be forwarded to Technology Center AU 1616 for processing of the request for continued examination under 37 CFR 1.114 and for consideration of the concurrently filed Information Disclosure Statement.

Frances Hicks

Frances Hicks
Petitions Examiner
Office of Petitions
Office of the Deputy Commissioner
for Patent Examination Policy

cc:

Robert McIsaac
Keown & Associates
500 West Cummings Park
Suite 1200
Woburn, WA 01801

---

whether a fee is indicated as being due or not, the Issue Fee Transmittal Form **must** be completed and timely submitted to avoid abandonment. Note the language in bold text on the first page of the Notice of Allowance and Fee(s) Due (PTOL-85).

UNITED STATES PATENT AND TRADEMARK OFFICE

COMMISSIONER FOR PATENTS
UNITED STATES PATENT AND TRADEMARK OFFICE
WASHINGTON, D.C. 20231
www.uspto.gov

Paper No. 6

BLAKELY SOKOLOFF TAYLOR & ZAFMAN
12400 WILSHIRE BOULEVARD
7TH FLOOR
LOS ANGELES, CA 90025

COPY MAILED

SEP 2 0 2000

SPECIAL PROGRAMS OFFICE
DAC FOR PATENTS

In re Application of	:
Chee-Seng Chow et al.	:
Application No. 09/518,583	: DECISION ACCORDING
Filed: March 3, 2000	: STATUS UNDER 37 CFR 1.47(a)
For: SYSTEM AND METHOD FOR	:
ACCESSING A REMOTE SERVER FROM	:
AN INTRANET WITH A SINGLE SIGN-	:
ON	:

This is in response to the "Petition Under 37 CFR 1.47(a)," filed August 14, 2000.

The petition is granted.

Petitioner has shown that the non-signing inventor has refused to join in the filing of the above-identified application.

The above-identified application and papers have been reviewed and found in compliance with 37 CFR 1.47(a). This application is hereby accorded Rule 1.47(a) status. As provided in Rule 1.47(a), this Office will forward notice of this application's filing to the non-signing inventor at the address given in the Declaration. Notice of the filing of this application will also be published in the Official Gazette.

Telephone inquiries regarding this decision should be directed to Petitions Examiner Wan Laymon at (703) 306-5685.

This application is being forwarded to Initial Patent Examination Division for Preexamination Processing.

Frances Hicks

Frances Hicks
Lead Petitions Examiner
Office of Petitions
Office of the Deputy Commissioner
for Patent Examination Policy

UNITED STATES PATENT AND TRADEMARK OFFICE

COMMISSIONER FOR PATENTS
UNITED STATES PATENT AND TRADEMARK OFFICE
WASHINGTON, D.C. 20231
www.uspto.gov

Paper No. 21

PIPER RUDNICK
P.O. BOX 64807
CHICAGO, IL 60664-0807

COPY MAILED

APR 0 9 2003

OFFICE OF PETITIONS

In re Application of :
Dale C. McCarthy :
Application No. 09/518,650 : NOTICE
Filed: March 3, 2000 :
Attorney Docket No. CTI-103 :

This is a notice regarding your request for acceptance of a fee deficiency submission under 37 CFR 1.28. On September 1, 1998, the Court of Appeals for the Federal Circuit held that 37 CFR 1.28(c) is the sole provision governing the time for correction of the erroneous payment of the issue fee as a small entity. **See DH Technology v. Synergystex International, Inc. 154 F.3d 1333, 47 USPQ2d 1865 (Fed. Cir. Sept. 1, 1998).**

The Office no longer investigates or rejects original or reissue applications under 37 CFR 1.56. **1098 Off. Gaz. Pat. Office 502 (January 3, 1989).** Therefore, nothing in this Notice is intended to imply that an investigation was done.

Your fee deficiency submission under 37 CFR 1.28 is hereby **ACCEPTED**.

Inquiries related to this communication should be directed to the Office of Petitions Staff at (703) 305-9285.

This file is being forwarded to Technology Center AU 2833.

Wan Laymon
Petitions Examiner
Office of Petitions
Office of the Deputy Commissioner
for Patent Examination Policy

UNITED STATES
PATENT AND
TRADEMARK OFFICE

UNDER SECRETARY OF COMMERCE FOR INTELLECTUAL PROPERTY
AND DIRECTOR OF THE UNITED STATES PATENT AND TRADEMARK OFFICE
WASHINGTON, D.C. 20231
WWW.USPTO.GOV

MAY - 6 2003

#27

BROWN & MICHAELS, PC
400 M & T BANK BUILDING
118 NORTH TIOGA ST
ITHACA NY 14850

In re Application of	:
Gary Blissard et al	:
Serial No.: 09/518,763	: WITHDRAWAL OF ABANDONMENT
Filed: March 3, 2000	:
Attorney Docket No.: BTI-44	:

This is in response to the petition under 37 CFR 1.181, filed April 10, 2002, requesting withdrawal of the holding of abandonment of the above identified application.

A review of the file history shows that the examiner mailed a Final Office action to applicants on April 12, 2001, setting a three month shortened statutory period for reply. On April 23, 2001, June 11, 2001, July 23, 2001 and August 13, 2001, applicants held telephonic interviews with the examiner. Applicants filed a first Amendment After Final rejection (AAF) on August 16, 2001, including a one month extension of time. Because the directions regarding cancellation of claims were not clear, the examiner mailed an Advisory Action to applicants on August 29, 2001, indicating the problems, but indicating that claims 45-50 would be allowable if all other claims were canceled, and also requiring for the first time submission of a new sequence disk since the sequence of Figure 1 was not included on the original disk. A second AAF was filed on September 17, 2001, including a second one month extension of time and a new sequence disk. On September 18, 2001, applicants conducted another telephone interview with the examiner. In a subsequent telephone interview on September 28, 2001, the examiner indicated all claims (i.e. - 45-51) allowable and the case as allowable pending processing of the sequence disk. No formal Advisory Action was mailed stating this. The disk was processed on October 1, 2001, and found to contain errors, however the results were not received by the examiner until after November 16, 2001. The reason for the delay is unclear. The examiner then informed applicants of the defective disk in a telephone interview on January 2, 2002, and mailed a Notice of Abandonment on January 3, 2002. Applicants filed a new sequence disk on April 10, 2002, as well as this petition under 37 CFR 1.181 and a concurrent petition under 37 CFR 1.137(b). Because the two petitions are decided in different areas of the Office, a delay was occasioned as to which petition should be decided first.

In reviewing the above prosecution history, it is clear that the requirement for a new sequence disk arose only with the mailing of the Advisory action in reply to the first AAF. It is also noted that the sequence disk filed with the original application papers was not defective and was accepted by the Office. Based on this disk the examination was conducted. It was only in anticipation of allowance of the application that a question arose with respect to the presence or absence of the sequence of Figure 1 in electronic form. Placing the sequence on a disk and

Adjustment date: 05/07/2003 TTOBI
04/11/2002 AWONDAF1 00000025 09518763
01 FC:241 -640.00 OP

submitting it to the Office is a formality requirement which does not affect patentability inasmuch as the printed copy of the sequence is part of the specification and drawings. Placing it on disk, however, allows it to be available in electronic form for searching and other purposes. Thus the requirement for the new sequence disk did not affect the patentability of the application which, as indicated telephonically by the examiner, was in condition for allowance with the submission of the last amendment. In this instance, and especially since the requirement for a new sequence was not made until mailing of the Advisory Action, the proper course of action would have been for the examiner to mail applicants an *ex parte Quayle* Office action requiring submission of a corrected sequence disk.

In view of the above the Notice of Abandonment is withdrawn and the application restored to pending status with the mailing of this decision.

Applicants' petition under 37 CFR 1.181 is **GRANTED**. Inasmuch as the petition under 37 CFR 1.181 is granted, the petition under 37 CFR 1.137(b) is dismissed as moot.

As there is not fee for this petition the petition fee paid of $130.00 will be credited to applicants' Deposit Account No., 02-0910, as directed.

In addition, the petition fee of $640.00 for the petition under 37 CFR 1.137(b) will also be credited to applicants' Deposit Account No., 02-0910, as directed.

The application will be forwarded to the examiner for preparation of the Notice of allowability and Notice of allowance and Issue Fee Due.

Should there be any questions with regard to this letter please contact William R. Dixon, Jr. by letter addressed to the Director, Technology Center 1600, Washington, DC 20231, or by telephone at (703) 308-3824 or by facsimile transmission at (703) 305-7230.

for John Doll
Director, Technology Center 1600

PAYMENT: 05/02/2008 TT0DB1 $770.00 CR
FEE: 9204

UNITED STATES PATENT AND TRADEMARK OFFICE

Commissioner for Patents
United States Patent and Trademark Office
P.O. Box 1450
Alexandria, VA 22313-1450
www.uspto.gov

Paper No.

LERNER, DAVID, LITTENBERG,
KRUMHOLZ & MENTLIK
600 SOUTH AVENUE WEST
WESTFIELD NJ 07090

COPY MAILED
OCT 13 2006
OFFICE OF PETITIONS

In re Application of :
Kawamoto et al. : DECISION ON PETITION
Application No. 09/518,808 :
Filed: March 3, 2000 :
Atty Docket No. 7217/31035 :

This is a decision on the PETITION TO REVIVE ABANDONED APPLICATION UNDER 37 CFR 1.137(B) filed July 19, 2006.

The petition is **DISMISSED**.

Any request for reconsideration of this decision must be submitted within TWO (2) MONTHS from the mail date of this decision. Extensions of time under 37 C.F.R. § 1.136(a) are permitted. The reconsideration request should include a cover letter entitled "Renewed Petition under 37 C.F.R. § 1.137(b)."

The above-identified application became abandoned effective January 29, 2006 for failure to file a timely reply to the final Office action mailed October 28, 2005. This Office action set a shortened statutory period for reply of three (3) months, with extensions of time obtainable under § 1.136(a). A courtesy Notice of Abandonment was mailed on May 19, 2006.

The provisions of 37 C.F.R. § 1.137(b) provide that where the delay in reply was unintentional, a petition may be filed to revive an abandoned application or a lapsed patent. A petition filed pursuant to 37 C.F.R. §1.137(b) must be accompanied by:

(1) The reply required to the outstanding Office action or notice, unless previously filed;

(2) The petition fee as set forth in § 1.17(m);

(3) A statement that the entire delay in filing the required reply from the due date for the reply until the filing of a grantable petition pursuant to this paragraph was unintentional. The Director may require additional information where there is a question whether the delay was unintentional; and

(4) Any terminal disclaimer (and fee as set forth in § 1.20(d)) required pursuant to paragraph (d) of this section.

The petition includes a proposed reply in the form of an amendment, the required statement of unintentional delay and payment of the petition fee set forth in 37 CFR § 1.17(m). No terminal disclaimer is required. However, the instant petition does not satisfy requirement (1) above.

As stated in MPEP 711.03(c),

A reply under 37 CFR 1.113 to a final action must include a request for continued examination (RCE) under 37 CFR 1.114 or cancellation of, or appeal from the rejection of, each claim so rejected. Accordingly, in a nonprovisional application abandoned for failure to reply to a final action, the reply required for consideration of a petition to revive must be:

(A) a Notice of Appeal and appeal fee;
(B) an amendment under 37 CFR 1.116 that cancels all the rejected claims or otherwise prima facie places the application in condition for allowance;
(C) the filing of an RCE (accompanied by a submission that meets the reply requirements of 37 CFR 1.111 and the requisite fee) under 37 CFR 1.114 for utility or plant applications filed on or after June 8, 1995 (see paragraph (d) below); or
(D) the filing of a continuing application under 37 CFR 1.53(b) (or a CPA under 37 CFR 1.53(d) if the application is a design application).

The amendment submitted does not place the application in condition for allowance. In view thereof, the petition must be dismissed. A courtesy copy of the Advisory Action is enclosed.

Further correspondence with respect to this matter should be addressed as follows:

By mail: Mail Stop Petition
Commissioner for Patents
P.O. Box 1450
Alexandria, VA 22313-1450

By fax: (703) 872-9306
ATTN: Office of Petitions

By hand: Customer Service Window
Randolph Building
401 Dulany Street
Alexandria, VA 22314

Telephone inquiries specific to this matter should be directed to the undersigned at (571) 272-3219.

Nancy Johnson
Senior Petitions Attorney
Office of Petitions

Enclosure: Courtesy Copy of Advisory Action (2 pages)

Courtesy Copy

Advisory Action Before the Filing of an Appeal Brief	Application No. 09/518,808	Applicant(s) KAWAMOTO ET AL.	
	Examiner George C. Neurauter, Jr.	Art Unit 2143	

--The MAILING DATE of this communication appears on the cover sheet with the correspondence address --

THE REPLY FILED 19 July 2006 FAILS TO PLACE THIS APPLICATION IN CONDITION FOR ALLOWANCE.

1. ☒ The reply was filed after a final rejection, but prior to or on the same day as filing a Notice of Appeal. To avoid abandonment of this application, applicant must timely file one of the following replies: (1) an amendment, affidavit, or other evidence, which places the application in condition for allowance; (2) a Notice of Appeal (with appeal fee) in compliance with 37 CFR 41.31; or (3) a Request for Continued Examination (RCE) in compliance with 37 CFR 1.114. The reply must be filed within one of the following time periods:
   a) ☒ The period for reply expires 3 months from the mailing date of the final rejection.
   b) ☐ The period for reply expires on: (1) the mailing date of this Advisory Action, or (2) the date set forth in the final rejection, whichever is later. In no event, however, will the statutory period for reply expire later than SIX MONTHS from the mailing date of the final rejection.
   Examiner Note: If box 1 is checked, check either box (a) or (b). ONLY CHECK BOX (b) WHEN THE FIRST REPLY WAS FILED WITHIN TWO MONTHS OF THE FINAL REJECTION. See MPEP 706.07(f).

Extensions of time may be obtained under 37 CFR 1.136(a). The date on which the petition under 37 CFR 1.136(a) and the appropriate extension fee have been filed is the date for purposes of determining the period of extension and the corresponding amount of the fee. The appropriate extension fee under 37 CFR 1.17(a) is calculated from: (1) the expiration date of the shortened statutory period for reply originally set in the final Office action; or (2) as set forth in (b) above, if checked. Any reply received by the Office later than three months after the mailing date of the final rejection, even if timely filed, may reduce any earned patent term adjustment. See 37 CFR 1.704(b).

NOTICE OF APPEAL

2. ☐ The Notice of Appeal was filed on _____. A brief in compliance with 37 CFR 41.37 must be filed within two months of the date of filing the Notice of Appeal (37 CFR 41.37(a)), or any extension thereof (37 CFR 41.37(e)), to avoid dismissal of the appeal. Since a Notice of Appeal has been filed, any reply must be filed within the time period set forth in 37 CFR 41.37(a).

AMENDMENTS

3. ☒ The proposed amendment(s) filed after a final rejection, but prior to the date of filing a brief, will not be entered because
   (a) ☒ They raise new issues that would require further consideration and/or search (see NOTE below);
   (b) ☐ They raise the issue of new matter (see NOTE below);
   (c) ☒ They are not deemed to place the application in better form for appeal by materially reducing or simplifying the issues for appeal; and/or
   (d) ☐ They present additional claims without canceling a corresponding number of finally rejected claims.
   NOTE: *See Continuation Sheet*. (See 37 CFR 1.116 and 41.33(a)).
4. ☐ The amendments are not in compliance with 37 CFR 1.121. See attached Notice of Non-Compliant Amendment (PTOL-324).
5. ☐ Applicant's reply has overcome the following rejection(s): _____.
6. ☐ Newly proposed or amended claim(s) _____ would be allowable if submitted in a separate, timely filed amendment canceling the non-allowable claim(s).
7. ☒ For purposes of appeal, the proposed amendment(s): a) ☒ will not be entered, or b) ☐ will be entered and an explanation of how the new or amended claims would be rejected is provided below or appended.
   The status of the claim(s) is (or will be) as follows:
   Claim(s) allowed: _____.
   Claim(s) objected to: _____.
   Claim(s) rejected: *1,3 and 10*.
   Claim(s) withdrawn from consideration: _____.

AFFIDAVIT OR OTHER EVIDENCE

8. ☐ The affidavit or other evidence filed after a final action, but before or on the date of filing a Notice of Appeal will not be entered because applicant failed to provide a showing of good and sufficient reasons why the affidavit or other evidence is necessary and was not earlier presented. See 37 CFR 1.116(e).
9. ☐ The affidavit or other evidence filed after the date of filing a Notice of Appeal, but prior to the date of filing a brief, will not be entered because the affidavit or other evidence failed to overcome all rejections under appeal and/or appellant fails to provide a showing a good and sufficient reasons why it is necessary and was not earlier presented. See 37 CFR 41.33(d)(1).
10. ☐ The affidavit or other evidence is entered. An explanation of the status of the claims after entry is below or attached.

REQUEST FOR RECONSIDERATION/OTHER

11. ☐ The request for reconsideration has been considered but does NOT place the application in condition for allowance because: _____.
12. ☐ Note the attached Information Disclosure Statement(s). (PTO/SB/08) Paper No(s). _____
13. ☐ Other: _____.

Continuation of 3. NOTE: The amendments made to the claims regarding the registered information and transmitting converted message information to a terminal device currently being used by a user will require further search and/or consideration.

UNITED STATES PATENT AND TRADEMARK OFFICE

Commissioner for Patents
United States Patent and Trademark Office
P.O. Box 1450
Alexandria, VA 22313-1450
www.uspto.gov

Paper No.

LERNER, DAVID, LITTENBERG,
KRUMHOLZ & MENTLIK
600 SOUTH AVENUE WEST
WESTFIELD NJ 07090

COPY MAILED
JAN 05 2007
OFFICE OF PETITIONS

In re Application of	:	
Kawamoto et al.	:	DECISION ON PETITION
Application No. 09/518,808	:	
Filed: March 3, 2000	:	
Atty Docket No. 7217/31035	:	

This is a decision on the RENEWED PETITION TO REVIVE ABANDONED APPLICATION UNDER 37 CFR 1.137(B) filed December 14, 2006 (certificate of mailing dated December 11, 2006).

Preliminarily, it is noted that petitioner has modified form PTO/SB/64 by adding the word "RENEWED" but without deleting the Form number or the OMB information. As stated on the Office's website on the forms page:

> NOTICE: If any part of the preprinted text of a PTO form is modified, deleted or added to, the form number and the OMB information in the header and footer of the form MUST be removed from the altered form.
>
> See http://www.uspto.gov/web/forms/index.html#patent (Last visited January 4, 2007).

The petition is **GRANTED**.

The above-identified application became abandoned effective January 29, 2006 for failure to file a timely reply to the final Office action mailed October 28, 2005. A courtesy Notice of Abandonment was mailed on May 19, 2006. By decision mailed October 13, 2006, the initial PETITION TO REVIVE ABANDONED APPLICATION UNDER 37 CFR 1.137(B) filed July 19, 2006 was dismissed for failure to provide the required reply.

On instant renewed petition, applicants have submitted the required reply in the form of a Request for Continued Examination (RCE)(and RCE fee) and an amendment. Applicants have now satisfied all requirements for revival.

Technology Center AU 2143 has been advised of this decision. The application is, thereby, forwarded to the examiner for consideration of the RCE and submission submitted on petition filed December 14, 2006.

Telephone inquiries specific to this matter should be directed to the undersigned at (571) 272-3219.

Nancy Johnson
Senior Petitions Attorney
Office of Petitions

UNITED STATES PATENT AND TRADEMARK OFFICE

UNITED STATES DEPARTMENT OF COMMERCE
United States Patent and Trademark Office
Address: COMMISSIONER FOR PATENTS
P.O. Box 1450
Alexandria, Virginia 22313-1450
www.uspto.gov

APPLICATION NO.	FILING DATE	FIRST NAMED INVENTOR	ATTORNEY DOCKET NO.	CONFIRMATION NO.
09/518,837	03/03/2000	Frank D. Tuttle	800470	9750

23372 7590 09/08/2008
TAYLOR RUSSELL & RUSSELL, P.C.
4807 SPICEWOOD SPRINGS ROAD
BUILDING TWO SUITE 250
AUSTIN, TX 78759

EXAMINER
POINVIL, FRANTZY

ART UNIT	PAPER NUMBER
3692	

MAIL DATE	DELIVERY MODE
09/08/2008	PAPER

Please find below and/or attached an Office communication concerning this application or proceeding.

The time period for reply, if any, is set in the attached communication.

UNITED STATES PATENT AND TRADEMARK OFFICE

Commissioner for Patents
United States Patent and Trademark Office
P.O. Box 1450
Alexandria, VA 22313-1450
www.uspto.gov

Douglas D. Russel
Taylor Russell & Russell, P.C.
4807 Spicewood Springs Road
Building Two Suite 250
Austin, TX 78759-8435

MAILED
FROM DIRECTORS OFFICE

SEP 0 5 2008

TECHNOLOGY CENTER 3600

In re Application of:
Frank D. Tuttle
Application No. 09/518,837
Filed: March 3, 2000
For: Loan Compliance Auditing System and Method

DECISION ON PETITION UNDER 37 CFR 1.181

This is in response to Applicant's petition under 37 CFR 1.181(a)(1) filed April 4, 2007 requesting withdrawal of the Examiner's rejection of Applicant's claims 1-42 in the Office action mailed February 7, 2007.

The Petition is **DISSMISSED as Moot.**

Applicant alleges that the Non-Final rejection mailed on February 7, 2007 is premature because the examiner did not have the authority to reopen or reconsider prosecution of the proceedings for matters already adjudicated by the Board of Patent Appeals and Interferences.

A review of the record reveals that sufficient cause were shown as the examiner has properly reopened the prosecution of the application as the non-final Office action mailed on February 7, 2007 was clearly approved by the acting director and it was based on the new grounds of rejections proposed by the Board of Patent Appeals and Interferences' suggestions. The new grounds of rejections were clearly articulated by administrative judge Levy in the decision and the opinion presented in the decision rendered on March 24, 2006 (See BPAI Decision page 13-15).

For the foregoing reasons, the Office action mailed on February 7, 2007 is proper and no abuse of discretion or arbitrary or capricious action is evidenced. Furthermore, a Notice of Allowability was mailed on June 26, 2008. Accordingly, the petition is dismissed as moot.

Questions concerning this decision should be referred to SPE Kambiz Abdi at (571) 272-6702.

Summary: **Petition DISSMISSED as Moot**

Wynn Coggins, Director
Patent Technology Center 3600
(571) 272-5250

TL

UNITED STATES PATENT AND TRADEMARK OFFICE

Commissioner for Patents
United States Patent and Trademark Office
P.O. Box 1450
Alexandria, VA 22313-1450
www.uspto.g

TAYLOR RUSSELL & RUSSELL, P.C.
4807 SPICEWOOD SPRINGS ROAD
BUILDING TWO SUITE 250
AUSTIN TX 78759

COPY MAILED

FEB 2 4 2009

OFFICE OF PETITIONS

In re Application of :
Frank D. Tuttle :
Application No. 09/518,837 : DECISION ON PETITION
Filed: March 3, 2000 :
Attorney Docket No. 800470 :

This is a decision on the request for Certificate of Correction which is being treated as a request under 37 CFR 3.81(b)[1] to correct the assignee's name on the Fee(s) Transmittal form PTOL-85(b) by way of a certificate of correction in the patent that has issued from the above-identified application.

The request is **GRANTED**.

Petitioner states that the correct assignee's name is Mavent Holdings, Inc. Irvine, CA (US) and that the incorrect assignee's name was included on the Fee(s) Transmittal form PTOL-85(b) at the time of payment of the issue fee. Accordingly, petitioner requests that a certificate of correction be issued to reflect the correct assignee on the front page of the Letters Patent in the patent that has issued from the application.

37 CFR 3.81(b), effective June 25, 2004, reads:

> *After payment of the issue fee:* Any request for issuance of an application in the name of the assignee submitted after the date of payment of the issue fee, and any request for a patent to be corrected to state the name of the assignee, must state that the assignment was submitted for recordation as set forth in § 3.11 before issuance of the patent, and must include a request for a certificate

[1] *See* MPEP 1309, subsection II; and Official Gazette of June 22, 2004.

> of correction under § 1.323 of this chapter (accompanied by the fee set forth in § 1.20(a) and the processing fee set forth in § 1.17(i) of this chapter.

The petition was accompanied by a certificate of correction (and fee) as required by 3.81(b). Further, Office assignment records reflect that Mevent Holdings, Inc. Irvine, CA (US) is the assignee of record. Accordingly, as the request complies with the provisions of 37 CFR 3.81(b), it would be appropriate for a certificate of correction to be processed.

Inquiries concerning this decision should be directed to JoAnne Burke at (571) 272-4584. Any questions concerning the issuance of a certificate of correction should be directed to the Certificates of Correction Branch at (571) 272-4200.

This matter is being referred to the Certificates of Correction Branch for processing of a certificate of correction in accordance with this decision.

Ramesh Krishnamurthy

Ramesh Krishnamurthy
Petitions Examiner
Office of Petitions

UNITED STATES PATENT AND TRADEMARK OFFICE

Commissioner for Patents
United States Patent and Trademark Office
P.O. Box 1450
Alexandria, VA 22313-1450
www.uspto.gov

FROST BROWN TODD, LLC
2200 PNC CENTER
201 E. FIFTH STREET
CINCINNATI OH 45202

COPY MAILED

JAN 23 2008

OFFICE OF PETITIONS

In re Application of :
Lukas, et al. :
Application No. 09/518,916 : ON PETITION
Filed: March 3, 2000 :
Attorney Docket No. 1160215/0531073 :
For: SYSTEM AND METHOD FOR OPTIMIZING A PRODUCT CONFIGURATION

This is a decision on the petition under 37 CFR 1.137(a), filed November 16, 2007. The petition will be treated under 37 CFR 1.181, as a request that the Office withdraw the holding of abandonment of the above-identified application.

The petition under 37 CFR 1.181 is **GRANTED**.

The petition under 37 CFR 1.137(a) is **DISMISSED AS MOOT**.

This application was held abandoned for purported failure to respond in a timely manner to the non-final Office action, mailed June 17, 2005, which set forth an extendable three (3) month period for reply. The Office contended that this application became abandoned on September 18, 2005 for failure to reply to the June 17, 2005 non-final Office action. A Notice of Abandonment was mailed on June 7, 2006.

Petitioners constructively request withdrawal of the holding of abandonment based on the assertion that an amendment and request for a one month extension of time and required fee, *inter alia*, were mailed to the Office on certificate of mailing date October 17, 2005 (a Monday) and received in the Office on October 21, 2005. The undersigned has located the original documents in the application file and Office financial records shows that the required one month extension of time fee was charged on October 24, 2005. The itemized transmittal letter in the application file contains a proper certificate of mailing dated October 17, 2005. Therefore, the one month extension of time and amendment were timely filed per 37 CFR 1.8.

The petition under 37 CFR 1.181 is **granted**, the holding of abandonment is withdrawn, and the June 7, 2006 Notice of Abandonment is **vacated**. No petition fee has been or will be charged in connection with this matter.

After the mailing of this decision, the application file will be forwarded to Technology Center A.U. 3625 for consideration of the amendment filed on October 21, 2005 (certificate of mailing date October 17, 2005).

Telephone inquiries pertaining to this matter may be directed to the undersigned at (571) 272-3230.

Shirene Willis Brantley

Shirene Willis Brantley
Senior Petitions Attorney
Office of Petitions
Office of the Deputy Commissioner
for Patent Examination Policy

UNITED STATES PATENT AND TRADEMARK OFFICE

Commissioner for Patents
United States Patent and Trademark Office
P.O. Box 1450
Alexandria, VA 22313-1450
www.uspto.gov

Paper No.

HUMAN GENOME SCIENCES INC.
INTELLECTUAL PROPERTY DEPT.
14200 SHADY GROVE ROAD
ROCKVILLE MD 20850

COPY MAILED

JAN 09 2007

OFFICE OF PETITIONS

In re Application of	:	
Gentz et al.	:	DECISION ON APPLICATION
Application No. 09/518,931	:	FOR
Filed: March 3, 2000	:	PATENT TERM ADJUSTMENT
Atty Docket No. PF454P1	:	

This is a decision on the "APPLICATION FOR PATENT TERM ADJUSTMENT UNDER 37 C.F.R. § 1.705(b) AND REQUEST TO AMEND ENTRIES IN PAIR" filed October 11, 2006. Applicants disclose that the initial determination of patent term adjustment under 35 U.S.C. 154(b) is one thousand twenty (1020) days and not one thousand two hundred twenty-six (1226) days.

The application for patent term adjustment is **GRANTED** to the extent indicated herein.

The Office has updated the PAIR screen to reflect that the correct Patent Term Adjustment (PTA) determination at the time of the mailing of the Notice of Allowance is five hundred ninety-nine (599) days. A copy of the updated PAIR screen, showing the correct determination, is enclosed.

On July 12, 2006, the Office mailed the Determination of Patent Term Adjustment under 35 U.S.C. 154(b) in the above-identified application. The Notice stated that the patent term adjustment[1] (PTA) to date is 1226 days. On October 11, 2006, applicants timely submitted an application for patent term adjustment (with required fee)[2]. Applicants indicate that both the period of

---

[1] This application became eligible for patent term adjustment for examination delay by virtue of the filing of a continuing prosecution application on October 25, 2000.

[2] PALM records indicate that the Issue Fee payment was also received on October 11, 2006.

adjustment of 1146 for Office delay in responding to applicants' reply and the period of adjustment of 206 days for Office delay due to an interference delay should not be entered. Applicants assert that the period of adjustment of 206 days should be corrected to 0 days because the period of 206 days extending from July 17, 2003 until February 8, 2004, overlaps entirely with the period calculated for the 1146-day Office delay.

The record supports a conclusion that the present application is not subject to a terminal disclaimer

Applicants are correct that if the periods of adjustment did so overlap that both periods should not be entered in the application. However, in this instance, a review of the periods of adjustment reveals that the period of adjustment of 1146 days for Office delay is incorrect.

Pursuant to 37 C.F.R. § 1.702(a),

Subject to the provisions of 35 U.S.C. 154(b) and this subpart, the term of an original patent shall be adjusted if the issuance of the patent was delayed due to the failure of the Office to:

> … (2) Respond to a reply under 35 U.S.C. 132 or to an appeal taken under 35 U.S.C. 134 not later than four months after the date on which the reply was filed or the appeal was taken;

On January 17, 2002, the Office mailed the Letter Regarding Suspension in response to, and within four months of, applicants' filing of the amendment after final on November 20, 2001. Thus, there was no examination delay within the meaning of § 1.702(a)(2). Thus, the period of adjustment of 1146 days for Office delay in responding to the amendment filed November 20, 2001 has been corrected to 0 days.

With respect to the periods of delay associated with the interference proceeding, 37 CFR 1.702(c) provides that:

> Subject to the provisions of 35 U.S.C. 154(b) and this subpart, the term of an original patent shall be adjusted if the issuance of the patent was delayed due to interference proceedings under 35 U.S.C. 135(a).

Further, 37 CFR 1.703(c) provides that:

> The period of adjustment under § 1.702(c) is the sum of the following periods, to the extent that the periods are not overlapping:
>
> > (1) The number of days, if any, in the period beginning on the date an interference was declared or redeclared to involve the application in the interference and ending on the date that the interference was terminated with respect to the application; and
> >
> > (2) The number of days, if any, in the period beginning on the date prosecution in the application was suspended by the Office due to interference proceedings under 35 U.S.C. 135(a) not involving the application and ending on the date of the termination of the suspension.

A review of the record reveals that letters of suspension were mailed on January 17, 2002, July 17, 2003 and June 9, 2004 due to an interference in another application. The record supports a conclusion that actions closing the A/R record and resetting the status with respect to these suspensions were taken on November 18, 2002, February 8, 2004, and January 8, 2005 respectively.

Applicants are entitled to periods of adjustment for examination delay pursuant to 1.702(c) only for those periods during which issuance of the patent was delayed due to interference proceedings under 35 U.S.C. 135(a). In this instance, pursuant to 1.703(c)(2), such period is limited to the number of days in the period beginning on the date prosecution in the application was suspended by the Office due to interference proceedings under 35 U.S.C. 135(a) not involving the application and ending on the date of the termination of the suspension. With respect to the suspensions in this case, it is concluded that the periods of adjustment are properly 306 days for the period from January 16, 2002 to November 18, 2002, 206 days for the period from July 17, 2003 to February 8, 2004, and 213 days for the period from June 9, 2004 to January 8, 2005. Thus, the total period of adjustment pursuant to 1.702(c) is 725 days.

In view thereof, the correct determination of patent term adjustment at the time of the mailing of the Notice of Allowance is five hundred ninety-nine (599) days (213 + 206 + 306 days of Office delay - an undisputed 126 days of applicant delay).

As this letter was submitted as an attempt to advise the Office of an error in Applicants' favor, the Office will not assess the $200.00 fee under 37 CFR 1.18(e). The Office thanks applicants for their good faith and candor in bringing this to the attention of the Office.

The Office of Patent Publication has been advised of this decision. The Office has, thereby, forwarded the file to the Office of Patent Publication so that a patent can be issued. The patent term adjustment indicated on the patent will include any additional patent term accrued for Office delay in issuing the patent after the issue fee had been paid and all outstanding requirements met.

Petitioner is reminded that if an application is entitled to an adjustment under 35 U.S.C. 154(b)(1)(B), the entire period during which the application was pending (except for periods excluded under 35 U.S.C. 154(b)(1)(B)(i)-(iii)), and not just the period beginning three years after the actual filing date of the application, is the period of delay under 35 U.S.C. 154(b)(1)(B) in determining whether periods of delay overlap under 35 U.S.C. 154(b)(2)(A). Thus, any days of delay for Office issuance of the patent more than 3 years after the filing date of the application, which overlap with the days of patent term adjustment accorded prior to the issuance of the patent will not result in any additional patent term adjustment. See 35 U.S.C. 154(b)(1)(B), 35 U.S.C. 154(b)(2)(A), and 37 CFR § 1.703(f). See also Revision of Patent Term Extension and Patent Term Adjustment Provisions; Final Rule, 69 Fed. Reg. 21704 (April 22, 2004).

Telephone inquiries specific to this matter should be directed to the undersigned at (571) 272-3219.

Nancy Johnson

Nancy Johnson
Senior Petitions Attorney
Office of Petitions

Enclosed: Copy of REVISED PALM Screen

PALM INTRANET

Day : Monday
Date: 1/8/2007
Time: 15:07:26

PTA Calculations for Application: 09/518931			
Application Filing Date:	03/03/2000	PTO Delay (PTO):	1352
Issue Date of Patent:		Three Years:	0
Pre-Issue Petitions:	0	Applicant Delay (APPL):	126
Post-Issue Petitions:	0	Total PTA (days):	599
PTO Delay Adjustment:	-627		

File Contents History

Number	Date	Contents Description	PTO	APPL	START
89	01/08/2007	ADJUSTMENT OF PTA CALCULATION BY PTO	213		
88	01/08/2007	ADJUSTMENT OF PTA CALCULATION BY PTO	206		
87	01/08/2007	ADJUSTMENT OF PTA CALCULATION BY PTO	306		
86	01/08/2007	ADJUSTMENT OF PTA CALCULATION BY PTO		1146	
85	01/08/2007	ADJUSTMENT OF PTA CALCULATION BY PTO		206	
75	07/12/2006	MAIL NOTICE OF ALLOWANCE			
74	07/12/2006	MAIL EXAMINER'S AMENDMENT			
73	07/10/2006	ISSUE REVISION COMPLETED			
72	07/10/2006	NOTICE OF ALLOWANCE DATA VERIFICATION COMPLETED			
71	07/10/2006	EXAMINER'S AMENDMENT COMMUNICATION			
70	07/10/2006	NOTICE OF ALLOWABILITY			
69	04/25/2006	INFORMATION DISCLOSURE STATEMENT CONSIDERED			
68	04/25/2006	AFFIDAVIT(S) (RULE 131 OR 132) OR EXHIBIT(S) RECEIVED			
67	04/25/2006	INFORMATION DISCLOSURE STATEMENT (IDS) FILED		0	65
66	05/03/2006	DATE FORWARDED TO EXAMINER			
65	04/25/2006	RESPONSE AFTER NON-FINAL ACTION		1	62
64	04/25/2006	REQUEST FOR EXTENSION OF TIME - GRANTED			
63	03/18/2006	IFW TSS PROCESSING BY TECH CENTER COMPLETE			
62	01/24/2006	MAIL NON-FINAL REJECTION			
61	01/23/2006	NON-FINAL REJECTION			
60	10/11/2005	INFORMATION DISCLOSURE STATEMENT CONSIDERED			

59	11/17/2005	DATE FORWARDED TO EXAMINER			
58	11/08/2005	RESPONSE AFTER NON-FINAL ACTION		28	53
57	10/21/2005	MAIL NOTICE OF INFORMAL OR NON-RESPONSIVE AMENDMENT			
56	10/11/2005	REFERENCE CAPTURE ON IDS			
55	10/11/2005	INFORMATION DISCLOSURE STATEMENT (IDS) FILED			
54	10/19/2005	DATE FORWARDED TO EXAMINER			
53.1	10/11/2005	INFORMAL OR NON-RESPONSIVE AMENDMENT AFTER EXAMINER ACTION			
53	10/11/2005	RESPONSE AFTER NON-FINAL ACTION		63	51
52	10/11/2005	REQUEST FOR EXTENSION OF TIME - GRANTED			
51	05/09/2005	MAIL NON-FINAL REJECTION	1146		35
50	05/03/2005	NON-FINAL REJECTION			
49	01/08/2005	DATE FORWARDED TO EXAMINER			
48	01/08/2005	TO CLOSE THE A/R RECORD AND RESET THE STATUS FOR EXPIRED SUSPENSIONS.			
47	12/09/2004	MISCELLANEOUS INCOMING LETTER			
46	06/09/2004	MAIL LETTER OF SUSPENSION			
45	06/08/2004	LETTER OF SUSPENSION - EXAMINER INITIATED			
44	02/08/2004	DATE FORWARDED TO EXAMINER			
43	02/08/2004	TO CLOSE THE A/R RECORD AND RESET THE STATUS FOR EXPIRED SUSPENSIONS.	206		42
42	07/17/2003	MAIL SUSPENSION DUE TO INTERFERENCE IN ANOTHER APPLICATION			
41	07/17/2003	LETTER OF SUSPENSION - INTERFERENCE IN ANOTHER CASE			
40	11/18/2002	DATE FORWARDED TO EXAMINER			
39	11/18/2002	TO CLOSE THE A/R RECORD AND RESET THE STATUS FOR EXPIRED SUSPENSIONS.			
38	01/17/2002	MAIL LETTER SUSPENDING PROSECUTION AT APPLICANT'S REQUEST			
37	01/16/2002	LETTER OF SUSPENSION - APPLICANT INITIATED			
36	12/10/2001	DATE FORWARDED TO EXAMINER			
35	11/20/2001	AMENDMENT AFTER FINAL REJECTION		34	31
34	11/20/2001	REQUEST FOR EXTENSION OF TIME - GRANTED			

33	11/20/2001	REQUEST FOR EXTENSION OF TIME - GRANTED			
32	10/12/2001	EXAMINER INTERVIEW SUMMARY RECORD (PTOL - 413)			
31	07/17/2001	MAIL FINAL REJECTION (PTOL - 326)			
30	07/16/2001	FINAL REJECTION			
29	05/14/2001	DATE FORWARDED TO EXAMINER			
28	05/04/2001	RESPONSE AFTER NON-FINAL ACTION			
27	05/04/2001	INFORMATION DISCLOSURE STATEMENT (IDS) FILED			
26	02/27/2001	MAIL NON-FINAL REJECTION			
25	02/26/2001	NON-FINAL REJECTION			
24	01/22/2001	CASE DOCKETED TO EXAMINER IN GAU			
23	01/03/2001	DATE FORWARDED TO EXAMINER			
22	12/12/2000	RESPONSE TO ELECTION / RESTRICTION FILED			
21	12/12/2000	REQUEST FOR EXTENSION OF TIME - GRANTED			
20	12/12/2000	INFORMATION DISCLOSURE STATEMENT (IDS) FILED			
19	11/20/2000	CRF IS GOOD TECHNICALLY / ENTERED INTO DATABASE			
18	11/09/2000	MAIL RESTRICTION REQUIREMENT			
17	11/09/2000	REQUIREMENT FOR RESTRICTION / ELECTION			
16	11/09/2000	DATE FORWARDED TO EXAMINER			
15	10/25/2000	CONTINUING PROSECUTION APPLICATION - CONTINUATION (ACPA)			
14	10/25/2000	MAIL EXPRESS ABANDONMENT (DURING EXAMINATION)			
13	10/25/2000	EXPRESS ABANDONMENT (DURING EXAMINATION)			
12	10/25/2000	PRELIMINARY AMENDMENT			
11	10/25/2000	NEW OR ADDITIONAL DRAWING FILED			
10	10/25/2000	INFORMATION DISCLOSURE STATEMENT (IDS) FILED			
9	10/25/2000	WORKFLOW - REQUEST FOR CPA - BEGIN			

Search Another: Application# Search

EXPLANATION OF PTA CALCULATION

EXPLANATION OF PTE CALCULATION

UNITED STATES PATENT AND TRADEMARK OFFICE

Commissioner for Patents
United States Patent and Trademark Office
P.O. Box 1450
Alexandria, VA 22313-1450
www.uspto.gov

Paper No.

HUMAN GENOME SCIENCES INC.
INTELLECTUAL PROPERTY DEPT.
14200 SHADY GROVE ROAD
ROCKVILLE MD 20850

COPY MAILED

OCT 01 2007

OFFICE OF PETITIONS

In re Application of	:	
Gentz et al.	:	DECISION ON REQUEST FOR
Application No. 09/518,931	:	RECONSIDERATION OF
Filed: March 3, 2000	:	PATENT TERM ADJUSTMENT
Atty Docket No. PF454P1	:	

This is a decision on the "REQUEST FOR RECONSIDERATION OF DECISION ON APPLICATION FOR PATENT TERM ADJUSTMENT" filed March 7, 2007. Patentees request reconsideration of the Patent Term Adjustment indicated in the Decision on Application for Patent Term Adjustment mailed on January 9, 2007. Patentees request that the determination of six hundred twenty-two (622) days be corrected to one thousand forty-three (1043) days.

The request for reconsideration of decision on application for patent term adjustment is **DISMISSED**.

Patentees are given **TWO (2) MONTHS** from the mail date of this decision to respond. No extensions of time will be granted under § 1.136.

BACKGROUND

On July 12, 2006, the Office mailed the Determination of Patent Term Adjustment under 35 U.S.C. 154(b) in the above-identified application. The Notice stated that the patent term adjustment[1] (PTA) to date is 1226 days.

On October 11, 2006, patentees timely submitted an application for patent term adjustment (with required fee). Therein,

[1] This application became eligible for patent term adjustment for examination delay by virtue of the filing of a continuing prosecution application on October 25, 2000.

patentees indicated that both the period of adjustment of 1146 for Office delay in responding to patentees' reply and the period of adjustment of 206 days for Office delay due to an interference delay should not be entered. Patentees asserted that the period of adjustment of 206 days should be corrected to 0 days because the period of 206 days extending from July 17, 2003 until February 8, 2004, overlapped entirely with the period calculated for the 1146-day Office delay. Patentees did not otherwise dispute the period of suspension of 206 days.

By decision mailed January 9, 2007, the Office advised patentees that the entry of a period of delay of 1146 days pursuant to 37 CFR 1.702(a)(2) was incorrect. Specifically, there was no Office delay within the meaning of 37 CFR 1.702(a)(2). The decision concluded that on January 17, 2002, the Office mailed the Letter Regarding Suspension in response to, and within four months of, patentees filing of the amendment after final on November 20, 2001. Thus, there was no examination delay.

Moreover, the decision entered a total of 725 days (including the previously accorded 206 days) for examination delay pursuant to 1.702(c) for those periods during which issuance of the patent was delayed due to interference proceedings under 35 U.S.C. 135(a). With respect to the suspensions in this case, it was concluded that the periods of adjustment are properly 306 days for the period from January 16, 2002 to November 18, 2002, 206 days for the period from July 17, 2003 to February 8, 2004, and 213 days for the period from June 9, 2004 to January 8, 2005 for a total of 725 days.

In view of the undisputed period of reduction of 126 days for applicant delay, the decision concluded that the patent term adjustment determination at the time of the mailing of the notice of allowance was 599 days (725 - 126).

After the mailing of the notice of allowance, an additional period of adjustment of 23 days was entered for the Office taking in excess of four months to issue the patent after the issue fee was paid and all outstanding requirements met.

Accordingly, on March 6, 2007, the patent issued with a revised patent term adjustment of 622 days.

On March 7, 2007, patentees timely filed this request for reconsideration of decision on application for patent term adjustment.

OPINION

Patentees' arguments have been considered, but not found persuasive. First, of all, there was no examination delay within the meaning of 35 USC 154(b)(1)(A)(ii) and 37 CFR 1.702(a)(2). The reply under 35 U.S.C. 132 was filed on November 20, 2001. The Letter Regarding Suspension mailed January 17, 2002, was mailed in response to and within four months of, the filing of the reply. Further, a review of the Letter Regarding Suspension makes clear that it is an Office action prepared by the examiner as a result of the examination conducted pursuant to 35 U.S.C. 131. For example, therein the amendment after final rejection was entered and patentees were advised as all claims were allowable. The Letter Regarding Suspension is a notification under 132 and properly stops the clock for determining examination delay pursuant to 37 CFR 1.702(a)(2).

The delay in this instance is for interference proceedings not for Office delay in taking action in response to the amendment filed November 20, 2001. A review of the record confirms that the period of 725 days entered pursuant to 37 CFR 1.703(c)(2) is also correct. As previously stated, this period is limited to the number of days in the period beginning on the date prosecution in the application was suspended by the Office due to interference proceedings under 35 U.S.C. 135(a) not involving the application and ending on the date of the termination of the suspension. It was proper to use the dates of November 18, 2002, February 8, 2004 and January 8, 2005 for the dates of termination of suspensions. As stated in each letter, ex parte prosecution was

> SUSPENDED FOR A PERIOD OF 6 MONTHS from the mail date of the letter. Upon expiration of the period of suspension, applicant should make an inquiry as to the status of the application.

No inquiry having been made by patentees at the end of the 6 month period, nonetheless, the suspensions were terminated. The suspensions did not last until the mailing of the Office action on May 9, 2005.

In view thereof the patent properly issued with a revised patent term adjustment of six hundred twenty-two (622) days.

Telephone inquiries specific to this matter should be directed to the undersigned at (571) 272-3219.

Nancy Johnson
Senior Petitions Attorney
Office of Petitions

UNITED STATES PATENT AND TRADEMARK OFFICE

UNDER SECRETARY OF COMMERCE FOR INTELLECTUAL PROPERTY AND
DIRECTOR OF THE UNITED STATES PATENT AND TRADEMARK OFFICE
WASHINGTON, DC 20231
www.uspto.gov

MAILED
FROM DIRECTORS OFFICE
DEC 07 2004
TECHNOLOGY CENTER 3600

MORRISON & FOERSTER LLP
755 PAGE MILL ROAD
PALO ALTO, CA 94304-1018

In re application of
Roger McAulay et al.
Application No. 09/519,008 :
Filed: March 03, 2000 :
For: DISTRIBUTED ELECTRONIC ENTERTAINMENT METHOD AND APPARATUS :

DECISION ON REQUEST FOR WITHDRAWAL OF ATTORNEY

This is a decision on the request filed on October 18, 2004, under 37 CFR 1.36 and MPEP 402.06, requesting permission to withdraw as the attorney of record in the above-identified application.

The request is **NOT APPROVED**.

Under 37 CFR 1.36 an attorney may withdraw only upon application to and approval by the Commissioner. It should be noted that a withdrawal is effective when approved, not when filed. Besides giving due notice to his or her client and delivering to the client all papers and property to which the client is entitled as specified under 37 CFR 10.40, approval of such a request requires that the following conditions be met:

A) Each attorney of record must sign the notice of withdrawal, or the notice must contain a clear indication of one attorney signing on behalf of another, because the Office does not recognize law firms;

B) A proper reason for the withdrawal as enumerated in 37 CFR 10.40(b) or subsection (1)-(6) of 37 CFR 10.40(c) must be provided; and

C) If withdrawal is requested in accordance with 37 CFR 10.40(c) above, there must be at least 30 days between approval of the withdrawal and the later of the expiration date of a time period for reply or the expiration date of the period which can be obtained by a petition and fee for extension of time under 37 CFR 1.136(a).

The request to withdraw as attorney in the above-identified application is not approved because the request does not comply with Item A).

The request to withdraw as attorney is not signed.

Kenneth J. Dorner
Special Programs Examiner
Patent Technology Center 3600
(703) 308-0866
Facsimile No.: (703) 605-0586

KJD/slb: 11/29/04

SPE RESPONSE FOR CERTIFICATE OF CORRECTION

Paper No.: _____

DATE : 07-01-08

TO SPE OF : ART UNIT 2165

SUBJECT : Request for Certificate of Correction for Appl. No.: **09/519178** Patent No.: **7139767**

Please respond to this request for a certificate of correction within 7 days.

Please review the requested changes/corrections as shown in the **COCIN** document(s) in the IFW application image. No new matter should be introduced, nor should the scope or meaning of the claims be changed.

Please complete the response (see below) and forward the completed response to scanning using document code **COCX**.

Angela Green
Certificates of Correction Branch
703.308.9380 ext. 123

Thank You For Your Assistance

The request for issuing the above-identified correction(s) is hereby:
Note your decision on the appropriate box.

- ☒ **Approved** — All changes apply.
- ☐ **Approved in Part** — Specify below which changes **do not** apply.
- ☐ **Denied** — State the reasons for denial below.

Comments: _____

CHRISTIAN CHACE
SUPERVISORY PATENT EXAMINER
TECHNOLOGY CENTER 2100

SPE

2165
Art Unit

UNITED STATES DEPARTMENT OF COMMERCE
Patent and Trademark Office
ASSISTANT SECRETARY OF COMMERCE AND
COMMISSIONER OF PATENTS AND TRADEMARKS
Washington, DC 2023

August 20, 2002

Kenneth A. Grandy
Woodard, Emhardt, Naughton
Moriarty & NcNett
Bank One Center/Tower, Suite 3700
Indianapolis, IN 46204-5137

In re application of:
Hallett H. Mathews DECISION ON PETITION
Serial No.: 09/519,295
Filed: March 6, 2000
For: METHOD FOR SUBCUTANEOUS SUPRAFASCIAL
PEDICULAR INTERNAL FIXATION

This is a decision on the petition received on February 7, 2002, to withdraw the holding of abandonment in the above-identified application.

The above-identified application became abandoned for failure to reply within the meaning of 37 C.F.R. 1.113 in timely manner to the Notice to File Missing Parts of Application mailed May 11, 2000. Which set a shortened statutory period for reply of two (2) months. Accordingly, this application became abandoned July 12, 2000. A notice of abandonment was mailed on December 3, 2001.

On February 7, 2002, the office received a communication from the attorney of record. Enclosed was an acknowledgment that the attorney never received the Notice to File Missing Part mailed May 11, 2000.

The evidence submitted is sufficient to establish that the petitioners never received the Notice to File Missing Parts of Application mailed May 11, 2000.

The petition is hereby GRANTED.

A new Notice to File Missing Parts is enclosed wit the Decision setting forth a new response period of two months from the date of the notice.

Telephone inquiries concerning this matter may be directed to Doshie E. Day at (703) 308-3640.

Doshie Day

Doshie E. Day
Program Management Assistant
Office Initial Patent Examination.

SPE RESPONSE FOR CERTIFICATE OF CORRECTION

Paper No.: _____

DATE : 08/01/2005

TO SPE OF : ART UNIT 1743

SUBJECT : Request for Certificate of Correction on Patent No.: 09/519330 6881585

A response is requested with respect to the accompanying request for a certificate of correction.

Please complete this form and return with file, within **7** days to:
Palm location **7580, Certificates of Correction Branch – South Tower – 9A22**
If response is for an IFW, **return to employee (named below) via PUBSCofC Team in MADRAS.**
With respect to the change(s) requested, correcting Office and/or Applicant's errors, should the patent read as shown in the certificate of correction (COCIN)? No new matter should be introduced, nor should the scope or meaning of the claims be changed.

Thank You For Your Assistance

A Green

Angela Green
Certificates of Correction Branch
Tel. No. 703-305-9380 ext. 123

The request for issuing the above-identified correction(s) is hereby:
Note your decision on the appropriate box.

- [x] **Approved** — **All** changes apply.
- [ ] **Approved in Part** — Specify below which changes **do not** apply.
- [ ] **Denied** — State the reasons for denial below.

Comments:

_____

_____

_____

_____

_____

Jill Warden — **SPE**

1743 — **Art Unit**

Under the Paperwork Reduction Act of 1995, no persons are required to respond to a collection of information unless it displays valid OMB control number.

PETITION TO ACCEPT UNINTENTIONALLY DELAYED PAYMENT OF MAINTENANCE FEE IN AN EXPIRED PATENT (37 CFR 1.378(c))

Patent Number	Issue Date (YYYY-MM-DD)	Application Number	Filing Date (YYYY-MM-DD)	Docket Number (if applicable)
6673328	2004-01-06	09519559	2000-03-06	0788.0

CAUTION: Maintenance fee (and surcharge, if any) payment must correctly identify: (1) the patent number and (2) the application number of the actual U.S. application leading to issuance of that patent to ensure the fee(s) is/are associated with the correct patent. 37 CFR 1.366(c) and (d).

SMALL ENTITY
☐ Patentee claims, or has previously claimed, small entity status. See 37 CFR 1.27.

LOSS OF ENTITLEMENT TO SMALL ENTITY STATUS
☐ Patentee is no longer entitled to small entity status. See 37 CFR 1.27(g)

NOT Small Entity		Small Entity	
Fee	Code	Fee	Code
◉ 3 ½ year	(1551)	○ 3 ½ year	(2551)
○ 7 ½ year	(1552)	○ 7 ½ year	(2552)
○ 11 ½ year	(1553)	○ 11 ½ year	(2553)

SURCHARGE
The surcharge required by 37 CFR 1.20(i)(2) (Fee Code 1558) must be paid as a condition of accepting unintentionally delayed payment of the maintenance fee.

MAINTENANCE FEE (37 CFR 1.20(e)-(g))
The appropriate maintenance fee must be submitted with this petition.

STATEMENT
THE UNDERSIGNED CERTIFIES THAT THE DELAY IN PAYMENT OF THE MAINTENANCE FEE TO THIS PATENT WAS UNINTENTIONAL

PETITIONER(S) REQUEST THAT THE DELAYED PAYMENT OF THE MAINTENANCE FEE BE ACCEPTED AND THE PATENT REINSTATED

THIS PORTION MUST BE COMPLETED BY THE SIGNATORY OR SIGNATORIES

37 CFR 1.378(d) states: "Any petition under this section must be signed by an attorney or agent registered to practice before the Patent and Trademark Office, or by the patentee, the assignee, or other party in interest."

I certify, in accordance with 37 CFR 1.4(d)(4) that I am

◉ An attorney or agent registered to practice before the Patent and Trademark Office

○ A sole patentee

○ A joint patentee; I certify that I am authorized to sign this submission on behalf of all the other patentees.

○ A joint patentee; all of whom are signing this e-petition

○ The assignee of record of the entire interest

Patent Practitioner			
A signature of the applicant or representative is required in accordance with 37 CFR 1.33 and 10.18. Please see 37 CFR 1.4(d) for the form of the signature			
Signature	/Joseph A. Marasco/	Date (YYYY-MM-DD)	2008-02-22
Name	Joseph A. Marasco	Registration Number	32798

This collection of information is required by 37 CFR 1.378(c). The information is required to obtain or retain a benefit by the public which is to file (and by the USPTO to process) an application. Confidentiality is governed by 35 U.S.C. 122 and 37 CFR 1.11 and 1.14. This collection is estimated to take 1 hour to complete, including gathering, preparing, and submitting the completed application form to the USPTO. Time will vary depending upon the individual case. Any comments on the amount of time you require to complete this form and/ or suggestions for reducing this burden, should be sent to the Chief Information Officer, U.S. Patent and Trademark Office, U.S. Department of Commerce, P.O. Box 1450, Alexandria, VA 22313-1450. DO NOT SEND FEES OR COMPLETED FORMS TO THIS ADDRESS. **This form can only be used when in conjunction with EFS-Web. If this form is mailed to the USPTO, it may cause delays in reinstating the patent.**

Privacy Act Statement

The Privacy Act of 1974 (P.L. 93-579) requires that you be given certain information in connection with your submission of the attached form related to a patent application or patent. Accordingly, pursuant to the requirements of the Act, please be advised that: (1) the general authority for the collection of this information is 35 U.S.C. 2(b)(2); (2) furnishing of the information solicited is voluntary; and (3) the principal purpose for which the information is used by the U.S. Patent and Trademark Office is to process and/or examine your submission related to a patent application or patent. If you do not furnish the requested information, the U.S. Patent and Trademark Office may not be able to process and/or examine your submission, which may result in termination of proceedings or abandonment of the application or expiration of the patent.

The information provided by you in this form will be subject to the following routine uses:

1. The information on this form will be treated confidentially to the extent allowed under the Freedom of Information Act (5 U.S.C. 552) and the Privacy Act (5 U.S.C. 552a). Records from this system of records may be disclosed to the Department of Justice to determine whether the Freedom of Information Act requires disclosure of these record s.

2. A record from this system of records may be disclosed, as a routine use, in the course of presenting evidence to a court, magistrate, or administrative tribunal, including disclosures to opposing counsel in the course of settlement negotiations.

3. A record in this system of records may be disclosed, as a routine use, to a Member of Congress submitting a request involving an individual, to whom the record pertains, when the individual has requested assistance from the Member with respect to the subject matter of the record.

4. A record in this system of records may be disclosed, as a routine use, to a contractor of the Agency having need for the information in order to perform a contract. Recipients of information shall be required to comply with the requirements of the Privacy Act of 1974, as amended, pursuant to 5 U.S.C. 552a(m).

5. A record related to an International Application filed under the Patent Cooperation Treaty in this system of records may be disclosed, as a routine use, to the International Bureau of the World Intellectual Property Organization, pursuant to the Patent Cooperation Treaty.

6. A record in this system of records may be disclosed, as a routine use, to another federal agency for purposes of National Security review (35 U.S.C. 181) and for review pursuant to the Atomic Energy Act (42 U.S.C. 218(c)).

7. A record from this system of records may be disclosed, as a routine use, to the Administrator, General Services, or his/her designee, during an inspection of records conducted by GSA as part of that agency's responsibility to recommend improvements in records management practices and programs, under authority of 44 U.S.C. 2904 and 2906. Such disclosure shall be made in accordance with the GSA regulations governing inspection of records for this purpose, and any other relevant (i.e., GSA or Commerce) directive. Such disclosure shall not be used to make determinations about individuals.

8. A record from this system of records may be disclosed, as a routine use, to the public after either publication of the application pursuant to 35 U.S.C. 122(b) or issuance of a patent pursuant to 35 U.S.C. 151. Further, a record may be disclosed, subject to the limitations of 37 CFR 1.14, as a routine use, to the public if the record was filed in an application which became abandoned or in which the proceedings were terminated and which application is referenced by either a published application, an application open to public inspections or an issued patent.

9. A record from this system of records may be disclosed, as a routine use, to a Federal, State, or local law enforcement agency, if the USPTO becomes aware of a violation or potential violation of law or regulation.

UNITED STATES PATENT AND TRADEMARK OFFICE

Commissioner for Patents
United States Patent and Trademark Office
P.O. Box 1450
Alexandria, VA 22313-1450
www.uspto.gov

In re Patent No. 6673328
Issue Date: January 6,2004
Application No. 09519559
Filed: March 6,2000
Attorney Docket No. 6321-163

:

:DECISION GRANTING PETITION
:UNDER 37 CFR 1.378(c)

:

This is a decision on the electronic petition, filed February 22,2008 ,under 37 CFR 1.378(c) to accept the unintentionally delayed payment of the 3.5 year maintenance fee for the above-identified patent.

The petition is GRANTED.

The maintenance fee is accepted, and the above-identified patent reinstated as of February 22,2008 . This decision also constitutes notice that the fee has been accepted. An electronic copy of the petition and this decision has been created as an entry in an Image File Wrapper. Nevertheless, petitioner should print and retain an independent copy

Telephone inquires related to this electronic decision should be directed to the Electronic Business Center at 1-866-217-9197.

UNITED STATES PATENT AND TRADEMARK OFFICE

COMMISSIONER FOR PATENTS
UNITED STATES PATENT AND TRADEMARK OFFICE
P.O. BOX 1450
ALEXANDRIA, VA 22313-1450
WWW.USPTO.GOV

Paper No. 10

MEDTRONIC INC.
710 MEDTRONIC PARKWAY NE
MS-LC340
MINNEAPOLIS, MN 55432-5604

COPY MAILED

JUN 2 4 2003

OFFICE OF PETITIONS

In re Application of :
Markus Haller et al :
Application No. 09/519,563 : ON PETITION
Filed: March 6, 2000 :
Attorney Docket No. P-7354.03 CIP2 :

This is a decision on the petition under 37 CFR 1.137(b), filed June 17, 2003, to revive the above-identified application.

The petition is **GRANTED**.

The above-identified application became abandoned for failure to reply in a timely manner to the non-final Office action mailed October 1, 2002, which set a shortened statutory period for reply of one (1) month. No extensions of time under the provisions of 37 CFR 1.136(a) were obtained. Accordingly, the above-identified application became abandoned on November 2, 2002.

The Associate Power of Attorney filed June 17, 2003 is noted and made of record.

An extension of time under 37 CFR 1.136 must be filed prior to the expiration of the maximum extendable period for reply. See In re Application of S., 8 USPQ2d 1630, 1631 (Comm'r Pats. 1988). Accordingly, no fee has been charged for the request for extension of time filed June 17, 2003.

Pursuant to petitioner's authorization, Deposit Account No. 13-2546 was charged $1,300.00 for the petition to revive an unintentionally abandoned application.

Telephone inquiries concerning this decision should be directed to Wan Laymon at (703) 305-9282.

The application file is being forwarded to Technology Center AU 3763.

Wan Laymon
Petitions Examiner
Office of Petitions
Office of the Deputy Commissioner
for Patent Examination Policy

UNITED STATES
PATENT AND
TRADEMARK OFFICE

UNDER SECRETARY OF COMMERCE FOR INTELLECTUAL PROPERTY
AND DIRECTOR OF THE UNITED STATES PATENT AND TRADEMARK OFFICE
WASHINGTON, D.C. 20231
WWW.USPTO.GOV

DEC 18 2002

#19

NICOLE S. BRADLEY
725 S. FIGUEROA STREET, SUITE 2800
LOS ANGELES, CA 90017-5406

In re Application of Behrooz Sharifi et al. :
Serial No.:09/519,703 :
Filed: March 7, 2000 :WITHDRAWAL OF ABANDONMENT
Attorney Docket No.: 008708-20003 :

This is in response to applicants' petition, filed May 31, 2002, to withdraw the abandonment of the above identified application based on non-receipt of an Office action and to restore the application to a pending status. The petition is being treated as a petition under 37 CFR 1.181.

A review of the file history shows that the examiner mailed an Office action on July 10, 2001, setting a three month statutory period for reply. On February 15, 2002, a Notice of Abandonment was mailed for failure to timely respond to the Office action of July 10, 2001. On May 31, 2002 applicants filed the instant petition. Applicants state that the Office action of July 10, 2001 was never received and provide as evidence thereof a declaration by James E. Swanson and copies of the docketing records for the application, showing non-receipt of the Office action. Based on the evidence presented it is concluded that applicants never received the Office action, most likely due to failure of the Office to change the correspondence address for applicants' representative.

Applicants point out that the required notification of change of correspondence address need take no particular form, citing MPEP 601.01. While this is correct, applicants would be well advised to send future notifications of address changes as a separate paper, so that they will come to the attention of the technical support staff who process such requests. Any notification placed at the end of a response to an Office action most likely will be viewed only by the examiner, who is unable to access the computer record of the application to effect the necessary change.

The Request to Withdraw Abandonment under 37 CFR 1.181 is GRANTED.

The application will be forwarded to the examiner for prompt re-mailing of the Office action of July 10, 2001.

Should there be any questions with regard to this letter please contact Bruce Campell by letter addressed to the Director, Technology Center 1600, Washington, DC 20231, or by telephone at (703) 308-4205 or by facsimile transmission at (703) 746-5006.

Jasemine C. Chambers

Jasemine Chambers
Director, Technology Center 1600

UNITED STATES PATENT AND TRADEMARK OFFICE

Commissioner for Patents
United States Patent and Trademark Office
P.O. Box 1450
Alexandria, VA 22313-1450
www.uspto.gov

In re Patent No. 6260633
Issue Date: July 17,2001
Application No. 09519751
Filed: March 6,2000
Attorney Docket No.

:

:DECISION GRANTING PETITION
:UNDER 37 CFR 1.378(c)

:

This is a decision on the electronic petition, filed June 13,2007 ,under 37 CFR 1.378(c) to accept the unintentionally delayed payment of the 3.5 year maintenance fee for the above-identified patent.

The petition is GRANTED.

The maintenance fee is accepted, and the above-identified patent reinstated as of June 13,2007 . This decision also constitutes notice that the fee has been accepted. An electronic copy of the petition and this decision has been created as an entry in an Image File Wrapper. Nevertheless, petitioner should print and retain an independent copy

Telephone inquires related to this electronic decision should be directed to the Electronic Business Center at 1-866-217-9197.

Under the Paperwork Reduction Act of 1995, no persons are required to respond to a collection of information unless it displays valid OMB control number.

PETITION TO ACCEPT UNINTENTIONALLY DELAYED PAYMENT OF MAINTENANCE FEE IN AN EXPIRED PATENT (37 CFR 1.378(c))

Patent Number	Issue Date (YYYY-MM-DD)	Application Number	Filing Date (YYYY-MM-DD)	Docket Number (if applicable)
6,260,633	2001-07-17	09519751	2000-03-06	

CAUTION: Maintenance fee (and surcharge, if any) payment must correctly identify: (1) the patent number and (2) the application number of the actual U.S. application leading to issuance of that patent to ensure the fee(s) is/are associated with the correct patent. 37 CFR 1.366(c) and (d).

SMALL ENTITY
☒ Patentee claims, or has previously claimed, small entity status. See 37 CFR 1.27.

LOSS OF ENTITLEMENT TO SMALL ENTITY STATUS
☐ Patentee is no longer entitled to small entity status. See 37 CFR 1.27(g)

NOT Small Entity		Small Entity	
Fee	Code	Fee	Code
○ 3 ½ year	(1551)	◉ 3 ½ year	(2551)
○ 7 ½ year	(1552)	○ 7 ½ year	(2552)
○ 11 ½ year	(1553)	○ 11 ½ year	(2553)

SURCHARGE
The surcharge required by 37 CFR 1.20(i)(2) (Fee Code 1558) must be paid as a condition of accepting unintentionally delayed payment of the maintenance fee.

MAINTENANCE FEE (37 CFR 1.20(e)-(g))
The appropriate maintenance fee must be submitted with this petition.

STATEMENT
THE UNDERSIGNED CERTIFIES THAT THE DELAY IN PAYMENT OF THE MAINTENANCE FEE TO THIS PATENT WAS UNINTENTIONAL

PETITIONER(S) REQUEST THAT THE DELAYED PAYMENT OF THE MAINTENANCE FEE BE ACCEPTED AND THE PATENT REINSTATED

THIS PORTION MUST BE COMPLETED BY THE SIGNATORY OR SIGNATORIES

37 CFR 1.378(d) states: "Any petition under this section must be signed by an attorney or agent registered to practice before the Patent and Trademark Office, or by the patentee, the assignee, or other party in interest."

I certify, in accordance with 37 CFR 1.4(d)(4) that I am

○ An attorney or agent registered to practice before the Patent and Trademark Office

○ A sole patentee

◉ A joint patentee; I certify that I am authorized to sign this submission on behalf of all the other patentees.

○ A joint patentee; all of whom are signing this e-petition

○ The assignee of record of the entire interest

A Joint Patentee and I certify that I am authorized to sign this submission on behalf of all the other patentees			
A signature of the applicant or representative is required in accordance with 37 CFR 1.33 and 10.18. Please see 37 CFR 1.4(d) for the form of the signature.			
Signature	/Michael D. Machek/	Date (YYYY-MM-DD)	2007-06-13
Name	Michael D. Machek		

This collection of information is required by 37 CFR 1.378(c). The information is required to obtain or retain a benefit by the public which is to file (and by the USPTO to process) an application. Confidentiality is governed by 35 U.S.C. 122 and 37 CFR 1.11 and 1.14. This collection is estimated to take 1 hour to complete, including gathering, preparing, and submitting the completed application form to the USPTO. Time will vary depending upon the individual case. Any comments on the amount of time you require to complete this form and/ or suggestions for reducing this burden, should be sent to the Chief Information Officer, U.S. Patent and Trademark Office, U.S. Department of Commerce, P.O. Box 1450, Alexandria, VA 22313-1450. DO NOT SEND FEES OR COMPLETED FORMS TO THIS ADDRESS. **This form can only be used when in conjunction with EFS-Web. If this form is mailed to the USPTO, it may cause delays in reinstating the patent.**

Privacy Act Statement

The Privacy Act of 1974 (P.L. 93-579) requires that you be given certain information in connection with your submission of the attached form related to a patent application or patent. Accordingly, pursuant to the requirements of the Act, please be advised that: (1) the general authority for the collection of this information is 35 U.S.C. 2(b)(2); (2) furnishing of the information solicited is voluntary; and (3) the principal purpose for which the information is used by the U.S. Patent and Trademark Office is to process and/or examine your submission related to a patent application or patent. If you do not furnish the requested information, the U.S. Patent and Trademark Office may not be able to process and/or examine your submission, which may result in termination of proceedings or abandonment of the application or expiration of the patent.

The information provided by you in this form will be subject to the following routine uses:

1. The information on this form will be treated confidentially to the extent allowed under the Freedom of Information Act (5 U.S.C. 552) and the Privacy Act (5 U.S.C. 552a). Records from this system of records may be disclosed to the Department of Justice to determine whether the Freedom of Information Act requires disclosure of these record s.

2. A record from this system of records may be disclosed, as a routine use, in the course of presenting evidence to a court, magistrate, or administrative tribunal, including disclosures to opposing counsel in the course of settlement negotiations.

3. A record in this system of records may be disclosed, as a routine use, to a Member of Congress submitting a request involving an individual, to whom the record pertains, when the individual has requested assistance from the Member with respect to the subject matter of the record.

4. A record in this system of records may be disclosed, as a routine use, to a contractor of the Agency having need for the information in order to perform a contract. Recipients of information shall be required to comply with the requirements of the Privacy Act of 1974, as amended, pursuant to 5 U.S.C. 552a(m).

5. A record related to an International Application filed under the Patent Cooperation Treaty in this system of records may be disclosed, as a routine use, to the International Bureau of the World Intellectual Property Organization, pursuant to the Patent Cooperation Treaty.

6. A record in this system of records may be disclosed, as a routine use, to another federal agency for purposes of National Security review (35 U.S.C. 181) and for review pursuant to the Atomic Energy Act (42 U.S.C. 218(c)).

7. A record from this system of records may be disclosed, as a routine use, to the Administrator, General Services, or his/her designee, during an inspection of records conducted by GSA as part of that agency's responsibility to recommend improvements in records management practices and programs, under authority of 44 U.S.C. 2904 and 2906. Such disclosure shall be made in accordance with the GSA regulations governing inspection of records for this purpose, and any other relevant (i.e., GSA or Commerce) directive. Such disclosure shall not be used to make determinations about individuals.

8. A record from this system of records may be disclosed, as a routine use, to the public after either publication of the application pursuant to 35 U.S.C. 122(b) or issuance of a patent pursuant to 35 U.S.C. 151. Further, a record may be disclosed, subject to the limitations of 37 CFR 1.14, as a routine use, to the public if the record was filed in an application which became abandoned or in which the proceedings were terminated and which application is referenced by either a published application, an application open to public inspections or an issued patent.

9. A record from this system of records may be disclosed, as a routine use, to a Federal, State, or local law enforcement agency, if the USPTO becomes aware of a violation or potential violation of law or regulation.

UNITED STATES PATENT AND TRADEMARK OFFICE

UNITED STATES DEPARTMENT OF COMMERCE
United States Patent and Trademark Office
Address: COMMISSIONER FOR PATENTS
P.O. Box 1450
Alexandria, Virginia 22313-1450
www.uspto.gov

SEYFARTH SHAW LLP
131 S. DEARBORN ST., SUITE 2400
CHICAGO, IL 60603-5803

Mail Date: 07/02/2010

Applicant	: Hardy Lee Crumby	: DECISION ON REQUEST FOR
Patent Number	: 6533664	: RECALCULATION of PATENT
Issue Date	: 03/18/2003	: TERM ADJUSTMENT IN VIEW
Application No	: 09/519,947	: OF WYETH
Filed	: 03/07/2000	:
		:

The Patentee's Request for Recalculation is **DISMISSED.**

This Request is deemed ineligible for consideration for one or more of the following reasons:

(A). The patent for which PTA recalculation is requested is either a design or reissue application or is a reexamination proceeding;

(B). The patent for which PTA recalculation is requested resulted from a utility or plant application filed under 35 USC 111(a) before May 29, 2000 and no CPA filed in the application on/after May 29, 2000;

(C). The patent for which PTA recalculation is requested resulted from an international application in which the international filing date was before May 29, 2000 and no CPA filed in the application on/after May 29, 2000;

(D). The patent for which PTA recalculation is requested issued on/after March 2, 2010;

(E). The Request for Recalculation was filed more than 180 days after the grant date of the patent and the request was not filed within two months of a dismissal of a request for reconsideration of the of the patent term under 37 CFR 1.705(d);

(F). The Request for Recalculation is not solely limited to USPTO pre-Wyeth interpretation of 35 U.S.C. 154(b)(2)(A);

or

(G). A civil action was filed pursuant to 35 U.S.C. 154(b)(4)(A)concerning the same patent at issue in this request.

Patentee may file a reply to this decision dismissing the Request for Recalculation. Patentee must file such reply within one month or thirty days, whichever is longer, of the mail date of the decision dismissing the Request for Recalculation. No fee is required if patentee is asserting in the reply that the dismissal for ineligibility is improper.

Patentee should use document code PET.OP if electronically filing a reply to this dismissal. If the USPTO finds that the request was improperly deemed ineligible, the USPTO will mail applicant a recalculation determination.

Patentee should be aware that in order to preserve the right to review in the United States District Court for the District of Columbia of the USPTO patent term adjustment determination, patentee must ensure that he or she also take the steps required under 35 U.S.C. 154(b)(4)(A). Nothing in the request for recalculation should be construed as providing an alternative time frame for commencing a civil action under 35 U.S.C. 154 (b)(4)(A).

Any questions concerning this decision should be directed to the Office of Patent Legal Administration at 571-272-7702.

UNITED STATES PATENT AND TRADEMARK OFFICE

COMMISSIONER FOR PATENTS
UNITED STATES PATENT AND TRADEMARK OFFICE
WASHINGTON, D.C. 20231
www.uspto.gov

Paper No. 6

JOSEPH S. TRIPOLI
THOMSON MULTIMEDIA LICENSING INC.
PATENT OPERATION
TWO INDEPENDENCE WAY, P.O. BOX 5312
PRINCETON NJ 08543-5312

COPY MAILED

JUL 2 5 2002

OFFICE OF PETITIONS

In re Application of
Maurice
Application No. 09/520,197
Deposited: February 25, 2000
Attorney Docket No. RCA 88441A

DECISION DISMISSING PETITION

This is a decision on the petition filed February 8, 2002, requesting that the above-identified application be accorded a filing date of February 25, 2000. In addition, a petition to revive under 37 CFR 1.137(b), filed January 16, 2002, will be addressed.

The petition to accord a February 25, 2000 filing date is dismissed.

The petition to revive under 37 CFR 1.137(b) is dismissed as moot.

Any request for reconsideration of this decision must be submitted within TWO (2) MONTHS from the mail date of this decision. Extensions of time under 37 CFR 1.136(a) are permitted.

The application was deposited on February 25, 2000. However, on May 17, 2000, the Office of Initial Patent Examination mailed a Notice of Incomplete Nonprovisional Application (Notice) requiring a specification, at least one claim, and a newly executed oath or declaration covering the items.[1] The Notice stated that the filing date would be the date of receipt of the required items.

On February 8, 2002, the the present petition was filed. Petitioner argues incorporation by reference.

A review of the application file confirms that the transmittal letter deposited on February 25, 2000 incorporated by reference the entire disclosure of prior application No. 08/737,192. The entire disclosure, including specification, claims and drawings of application No. 08/737,192 was specifically incorporated by reference in the present application on February 25, 2000.

A petition under 37 CFR 1.182 and the required petition fee, including an amendment submitting the necessary omitted material (the specification, claims and drawings), requesting that the necessary omitted material contained in the prior application and submitted in the

[1] The Notice does not require drawings because it is impossible to ascertain whether a drawing is necessary if no specification is present.

amendment, be included in the continuation or divisional application based upon the incorporation by reference statement, is required in order to accord the application a filing date as of the date of deposit of the continuation or divisional application. An amendment submitting the omitted material and relying upon the incorporation by reference will not be entered in the continuation or divisional application unless a decision granting the petition states that the application is accorded a filing date and that the amendment will be entered.

Unfortunately, the application file does not contain a copy of the specification, claims and drawings filed in application No. 08/737,192. Therefore, no filing date can be accorded at present time.

It is noted that the petition under 37 CFR 1.182, filed February 8, 2002, states that a copy of the prior specification , claims and drawings of the parent application are enclosed. The Office has no record of receiving these items.

In addition, the date typed at the bottom of the second page of the petition is June 29, 2000. Petitioner has not presented a certificate of mailing in compliance with 37 CFR 1.8 or an itemized date stamped post card receipt to enable the Office to accord June 29, 2000 as the filing date of the petition under 37 CFR 1.182. This means that the Office has no record of any prosecution activity on petitioner's part from February 25, 2000 until January 16, 2002. Proceedings in this case were officially terminated on January 7, 2002.

As petition is aware, an applicant's diligence in prosecuting an application is critical in ascertaining the scope of equitable relief when it is sought. Equitable powers should not be invoked to excuse the performance of a condition by a party that has not acted with reasonable, due care and diligence. U.S. v. Lockheed Petroleum Services, 709 F.2d 1472, 1475 (Fed. Cir. 1983). Petitioner is encouraged to provide evidence of diligence in responding to the May 17, 2000 Notice in order to avoid the possible imposition of a terminal disclaimer.

Regarding the petition to revive under 37 CFR 1.137(b), it is dismissed as moot because it is not possible to revive an application that has never been accorded a filing date. No petition fee under 37 CFR 1.137(b) has been or will be charged to petitioner's deposit account for this matter.

Pursuant to petitioner's authorization, deposit account no. 07-0832 will be charged the $130.00 petition fee for filing a petition under 37 CFR 1.182.

Further correspondence with respect to this matter should be addressed as follows:

By mail: Commissioner for Patents
Box DAC
Washington, D.C. 20231

By facsimile: (703) 308-6916
Attn: Office of Petitions

By hand: Office of Petitions
2201 South Clark Place
Crystal Plaza 4, Suite 3C23
Arlington, VA 22202
Attn: E. Shirene Willis

Any inquiries pertaining to this matter may be directed to Petitions Attorney E. Shirene Willis at (703) 308-6712.

Beverly M. Flanagan
Supervisory Petitions Examiner
Office of Petitions
Office of the Deputy Commissioner
for Patent Examination Policy

UNITED STATES PATENT AND TRADEMARK OFFICE

COMMISSIONER FOR PATENTS
UNITED STATES PATENT AND TRADEMARK OFFICE
WASHINGTON, D.C. 20231
www.uspto.gov

Paper No. 10

JOSEPH S. TRIPOLI
THOMSON MULTIMEDIA LICENSING INC.
PATENT OPERATION
TWO INDEPENDENCE WAY, P.O. BOX 5312
PRINCETON NJ 08543-5312

COPY MAILED

SEP 2 0 2002

OFFICE OF PETITIONS

In re Application of
Maurice
Application No. 09/520,197
Filed: February 25, 2000
Attorney Docket No. RCA 88441A

ON
PETITION

This is a decision on the reconsideration petition filed September 18, 2002 (postcard receipt date June 30, 2000), to accord the above-identified application a filing date of February 25, 2000.

On February 25, 2000, the application was deposited.

On May 17, 2000, the Office of Initial Patent Examination mailed a Notice stating that the specification and at least one claim were missing and that a filing date would be accorded upon receipt of the missing items.

In response, the present petition alleges that the specification, claims, and drawings were inadvertently omitted. However, the Utility Patent Application Transmittal sheet incorporated by reference the entire disclosure of the parent application. The petition states that the specification, claims, and drawings in the parent and divisional are identical.

The Office allows an applicant to rely upon an incorporation by reference of a parent application when a portion of the child application has been inadvertently omitted.

Based on the incorporation by reference, it appears that the specification and drawings were present in the Office on February 25, 2000, albeit in the file of another application, i.e., application No. 08/737,192. Therefore, on petition, the application may be accorded the requested filing date of February 25, 2000.

In view of the above, the petition is **granted**. The copy of the specification, drawings and claims submitted with the petition will be used for examination purposes .[1]

Regarding finances, because the Office did not have a record of receiving the June 30, 2000 petition, the Office terminated proceedings and refunded the filing fee minus a $130.00

[1] The Office assumes that the specification, drawings, and claims are a true and exact copy of the specification, drawings, and claims submitted in the parent application. If this is not the case, then petitioner must notify the Office. Of course, the primary examiner is expected to compare the instant specification and drawings to the disclosure of the parent application in order to verify that the specification and drawings are, in fact, parts of the disclosure of the prior application.

processing and handling fee. Petitioner has provided the Office with evidence that the petition was timely filed on June 30, 2000. Proceedings on the application should not have been terminated. Therefore, pursuant to petitioner's authorization, the $690.00 filing fee will be charged to deposit account no. 07-0832. The retention and handling fee will be recoded in Office financial records as the $130.00 petition fee for the instant petition. The $130 petition fee will not be refunded since the petition was required to accord the application the requested filing date. It is noted that petitioner was charged $130.00 on July 25, 2002, but the money was allocated to another application. Petitioner will be refunded $130.00.

Regarding the petition to revive under 37 CFR 1.137(b) cited in the July 25, 2002 decision, a further review of the document in question reveals that it was misplaced in this application file. No petition to revive has been filed in this case. Therefore, the decision of July 25, 2002 is **vacated** insofar as it addresses the misplaced petition to revive.

The Application is being returned to the Office of Initial Patent Examination for further processing with a filing date of February 25, 2000, using the application papers filed on February 25, 2000 the copy of the specification, drawings, and claims filed on September 18, 2002 (postcard receipt date June 30, 2000).

Telephone inquiries should be directed to the undersigned at (703) 308-6712.

E. Shirene Willis

E. Shirene Willis
Petitions Attorney
Office of Petitions
Office of the Deputy Commissioner
for Patent Examination Policy

UNITED STATES PATENT AND TRADEMARK OFFICE

Commissioner for Patents
United States Patent and Trademark Office
Washington, D.C. 20231
www.uspto.gov

Paper No. 16

Ronald S. Hermenau
Rohm and Haas Company
100 Independence Mall West
Philadelphia, PA 19106-2399

COPY MAILED

MAR 2 5 2003

OFFICE OF PETITIONS

In re Application of
Richard H. Weese et al.
Application No. 09/520,249
Filed: March 7, 2000
Attorney Docket No. 99-009 (RH2-0011)

ON PETITION

This is a decision on the petition under 37 CFR 1.137(b), filed March 4, 2003, to revive the above-identified application.

The petition is **GRANTED**.

The above-identified application became abandoned for failure to reply within the meaning of 37 CFR 1.113 in a timely manner to the final Office action mailed May 16, 2002, which set a shortened statutory period for reply of three (3) months. No extensions of time under the provisions of 37 CFR 1.136(a) were obtained. Accordingly, the above-identified application became abandoned on August 17, 2002.

There is no indication that the person signing the instant petition was ever given a power of attorney or authorization of agent to prosecute the above-identified application. However, in accordance with 37 CFR 1.34, the signature of Leah M. Reimer appearing on the petition shall constitute a representation to the United States Patent and Trademark Office that she is authorized to represent the particular party in whose behalf she acts. If Leah M. Reimer desires to receive future correspondence regarding this application, an appropriate power of attorney or authorization of agent must be submitted. A courtesy copy of this decision is being mailed to petitioner. Nevertheless, all future correspondence will be directed solely to the address of record until otherwise instructed.

The two-month period for filing an appeal brief in triplicate (accompanied by the fee required by 37 CFR 1.17(c)), runs from the date of this decision.

Telephone inquiries concerning this decision should be directed to Latrice Bond at (703) 308-6911.

The application file is being forwarded to Technology Center AU 1714 further processing.

Latrice Bond

Latrice Bond
Paralegal Specialist
Office of Petitions
Office of the Deputy Commissioner
for Patent Examination Policy

cc: Cantor Colburn LLP
55 Griffin Road South
Bloomfield, CT 06002

UNITED STATES PATENT AND TRADEMARK OFFICE

COMMISSIONER FOR PATENTS
UNITED STATES PATENT AND TRADEMARK OFFICE
P.O. BOX 1450
ALEXANDRIA, VA 22313-1450
www.uspto.gov

Paper No. 13

OBLON SPIVAK McCLELLAND
MAIER & NEUSTADT, P.C.
1940 DUKE STREET
ALEXANDRIA, VA 22314

COPY MAILED
APR 26 2004
OFFICE OF PETITIONS

In re Application of
Tetsuro Motoyama et al
Application No. 09/520,368
Filed: March 7, 2000
Attorney Docket No. 5244-0114-2

ON PETITION

This is a decision on the petition, filed April 26, 2004, under 37 CFR 1.313(c)(2) to withdraw the above-identified application from issue after payment of the issue fee.

The petition is **GRANTED**.

The above-identified application is withdrawn from issue for consideration of a submission under 37 CFR 1.114 (request for continued examination). See 37 CFR 1.313(c)(2).

Petitioner is advised that the issue fee paid on March 16, 2004 in the above-identified application cannot be refunded. If, however, the above-identified application is again allowed, petitioner may request that it be applied towards the issue fee required by the new Notice of Allowance.[1]

Telephone inquiries should be directed to Wan Laymon at (703) 306-5685.

Upon receipt of the file in the Office of Petitions, the file will be forwarded to Technology Center AU 2154 for processing of the request for continued examination under 37 CFR 1.114 and for consideration of the concurrently filed IDS.

Wan Laymon
Petitions Examiner
Office of Petitions
Office of the Deputy Commissioner
for Patent Examination Policy

---

[1] The request to apply the issue fee to the new Notice may be satisfied by completing and returning the new Issue Fee Transmittal Form PTOL-85(b), which includes the following language thereon: "Commissioner for Patents is requested to apply the Issue Fee and Publication Fee (if any) or re-apply any previously paid issue fee to the application identified above." Petitioner is advised that, whether a fee is indicated as being due or not, the Issue Fee Transmittal Form **must** be completed and timely submitted to avoid abandonment. Note the language in bold text on the first page of the Notice of Allowance and Fee(s) Due (PTOL-85).

UNITED STATES PATENT AND TRADEMARK OFFICE

Commissioner for Patents
United States Patent and Trademark Office
P.O. Box 1450
Alexandria, VA 22313-1450
www.uspto.gov

MICHAEL R. HULL
MARSHALL, GERSTEIN & BORUN
6300 SEARS TOWER
233 SOUTH WACKER DRIVE
CHICAGO IL 60606-6357

COPY MAILED

AUG 0 2 2005

OFFICE OF PETITIONS

In re Application of :
Michael G. Martinek et al :
Application No. 09/520,404 :
Filed: March 8, 2000 :
Attorney Docket No. PA0389.AP.US :

ON PETITION

This is a decision on the petition, filed August 1, 2005, under 37 CFR 1.313(c)(2) to withdraw the above-identified application from issue after payment of the issue fee.

The petition is **GRANTED.**

The above-identified application is withdrawn from issue for consideration of a submission under 37 CFR 1.114 (request for continued examination). See 37 CFR 1.313(c)(2).

Petitioner is advised that the issue fee paid on July 25, 2005 in the above-identified application cannot be refunded. If, however, the above-identified application is again allowed, petitioner may request that it be applied towards the issue fee required by the new Notice of Allowance.[1]

There is no indication that the person signing the instant petition was ever given a power of attorney or authorization of agent to prosecute the above-identified application. If the person signing the instant petition desires to receive future correspondence regarding this application, the appropriate power of attorney or authorization of agent must be submitted. While a courtesy copy of this decision is being mailed to the person signing the instant petition, all future correspondence will be directed to the address currently of record until such time as appropriate instructions are received to the contrary.

Telephone inquiries should be directed to the undersigned at (571) 272-3208.

---

[1] The request to apply the issue fee to the new Notice may be satisfied by completing and returning the new Issue Fee Transmittal Form PTOL-85(b), which includes the following language thereon: "Commissioner for Patents is requested to apply the Issue Fee and Publication Fee (if any) or re-apply any previously paid issue fee to the application identified above." Petitioner is advised that, whether a fee is indicated as being due or not, the Issue Fee Transmittal Form **must** be completed and timely submitted to avoid abandonment. Note the language in bold text on the first page of the Notice of Allowance and Fee(s) Due (PTOL-85).

The examiner of Technology Center AU 2131 will consider the request for continued examination under 37 CFR 1.114.

Karen Creasy

Karen Creasy
Petitions Examiner
Office of Petitions
Office of the Deputy Commissioner
for Patent Examination Policy

cc:
BEYER WEAVER & THOMAS
P.O. BOX 70250
OAKLAND, CA 94612-0250

UNITED STATES PATENT AND TRADEMARK OFFICE

COMMISSIONER FOR PATENTS
UNITED STATES PATENT AND TRADEMARK OFFICE
WASHINGTON, D.C. 20231
www.uspto.gov

Paper No. 10

Terrance A. Meador
GRAY CARY WARE & FREINDENRICH
401 B St
Suite 1700
San Diego, CA 92101

MAILED

JUL 17 2003

Technology Center 2100

In re Application of: Hartmut Neven, et al.	)	
Application No. 09/520, 479	)	
Filed: March 8, 2000	)	**DECISION ON REQUEST FOR**
For: COMMUNICATION SYSTEM AND	)	**WITHDRAWAL AS ATTORNEY**
METHOD INCLUDING RICH	)	
MEDIA	)	

This is a decision on the Request To Withdraw from Representation filed June 30, 2003.

A grantable request to withdraw as attorney of record should indicate thereon the present mailing addresses of the attorney(s) who is/are withdrawing from the record and of the applicant. The request for withdrawal must be signed by every attorney seeking to withdraw or contain a clear indication that one attorney is signing on behalf of another/others. A request to withdraw will not be approved unless at least 30 (thirty) days would remain between the date of approval and the later of the expiration date of a time to file a response or the expiration date of the maximum time period which can be extended under 37 C.F.R. § 1. 136(a). The effective date of withdrawal being the date of decision and not the date of request. See M.P.E.P. § 402.06. 37 C.F.R. § 1.36 further requires that the applicant or patent owner be notified of the withdrawal of the attorney or agent.

The request is **GRANTED**.

All future communications from the Office will be directed to the below-listed address until otherwise notified by applicant. This correspondence address is provided by the withdrawn attorney(s). Applicant is reminded of the obligation to promptly notify the Patent and Trademark Office (Office) of any change in correspondence address to ensure receipt of all communications from the Office.

For Vincent N. Trans
Special Programs Examiner
Technology Center 2100
Computer Architecture and Software
(703) 305-9750

cc: Narayan Iyer
40134 Laiolo Road
Fremont, CA 94538

UNITED STATES PATENT AND TRADEMARK OFFICE

COMMISSIONER FOR PATENTS
UNITED STATES PATENT AND TRADEMARK OFFICE
P.O. BOX 1450
ALEXANDRIA, VA 22313-1450
www.uspto.gov

Paper No. 15

SEED INTELLECTUAL PROPERTY LAW GROUP PLLC
701 FIFTH AVE
SUITE 6300
SEATTLE WA 98104-7092

COPY MAILED

FEB 20 2004

OFFICE OF PETITIONS

ON PETITION

In re Application of
Hartmut Neven et al.
Application No. 09/520,479
Filed: March 8, 2000
Attorney Docket Number: EYEM01

This is a decision on the petition under 37 CFR 1.137(b), filed February 10, 2004, to revive the above identified application.

The petition is **GRANTED**.

This application became abandoned for failure to timely reply to the non-Final Office Action mailed December 20, 2002. A shortened statutory period of three months was set for replying to the non-Final Office Action. No extensions of time having been requested, this application became abandoned March 21, 2003. Accordingly, a Notice of Abandonment was mailed June 30, 2003.

Petitioner files the instant petition under 37 CFR 1.137(b). [1]

This application is being forwarded to Technology Center 2174 for appropriate action on the amendment filed February 10, 2004.

Telephone inquiries concerning this matter should be directed to the undersigned Petitions Attorney at (703) 305-4497.

Patricia Faison-Ball
Senior Petitions Attorney
Office of Petitions

---

[1] Effective December 1, 1997, the provisions of 37 CFR 1.137(b) now provide that where the delay in reply was unintentional, a petition may be filed to revive an abandoned application or a lapsed patent pursuant to 37 CFR 1.137(b). A grantable petition filed under the provisions of 37 CFR 1.137(b) must be accompanied by:

(1) the required reply, unless previously filed. In a nonprovisional application abandoned for failure to prosecute, the required reply may be met by the filing of a continuing application. In an application or patent, abandoned or lapsed for failure to pay the issue fee or any portion thereof, the required reply must be the payment of the issue fee or any outstanding balance thereof.

(2) the petition fee as set forth in 37 CFR 1.17(m);

(3) a statement that the entire delay in filing the required reply from the due date for the reply until the filing of a grantable petition pursuant to 37 CFR 1.137(b) was unintentional. The Commissioner may required additional information where there is a question whether the delay was unintentional; and

(4) any terminal disclaimer (and fee as set forth in 37 CFR 1.20(d)) required pursuant to 37 CFR 1.137(c)).

UNITED STATES PATENT AND TRADEMARK OFFICE

Commissioner for Patents
United States Patent and Trademark Office
P.O. Box 1450
Alexandria, VA 22313-1450
www.uspto.gov

In re Patent No. 6554944
Issue Date: April 29,2003
Application No. 09520540
Filed: March 8,2000
Attorney Docket No.

:

:DECISION GRANTING PETITION
:UNDER 37 CFR 1.378(c)

:

This is a decision on the electronic petition, filed June 28,2007 ,under 37 CFR 1.378(c) to accept the unintentionally delayed payment of the 3.5 year maintenance fee for the above-identified patent.

The petition is GRANTED.

The maintenance fee is accepted, and the above-identified patent reinstated as of June 28,2007 . This decision also constitutes notice that the fee has been accepted. An electronic copy of the petition and this decision has been created as an entry in an Image File Wrapper. Nevertheless, petitioner should print and retain an independent copy

Telephone inquires related to this electronic decision should be directed to the Electronic Business Center at 1-866-217-9197.

Under the Paperwork Reduction Act of 1995, no persons are required to respond to a collection of information unless it displays valid OMB control number.

PETITION TO ACCEPT UNINTENTIONALLY DELAYED PAYMENT OF MAINTENANCE FEE IN AN EXPIRED PATENT (37 CFR 1.378(c))

Patent Number	Issue Date (YYYY-MM-DD)	Application Number	Filing Date (YYYY-MM-DD)	Docket Number (if applicable)
6554944	2003-04-29	09520540	2000-03-08	

CAUTION: Maintenance fee (and surcharge, if any) payment must correctly identify: (1) the patent number and (2) the application number of the actual U.S. application leading to issuance of that patent to ensure the fee(s) is/are associated with the correct patent. 37 CFR 1.366(c) and (d).

SMALL ENTITY
☒ Patentee claims, or has previously claimed, small entity status. See 37 CFR 1.27.

LOSS OF ENTITLEMENT TO SMALL ENTITY STATUS
☐ Patentee is no longer entitled to small entity status. See 37 CFR 1.27(g)

NOT Small Entity		Small Entity	
Fee	Code	Fee	Code
○ 3 ½ year	(1551)	◉ 3 ½ year	(2551)
○ 7 ½ year	(1552)	○ 7 ½ year	(2552)
○ 11 ½ year	(1553)	○ 11 ½ year	(2553)

SURCHARGE
The surcharge required by 37 CFR 1.20(i)(2) (Fee Code 1558) must be paid as a condition of accepting unintentionally delayed payment of the maintenance fee.

MAINTENANCE FEE (37 CFR 1.20(e)-(g))
The appropriate maintenance fee must be submitted with this petition.

STATEMENT
THE UNDERSIGNED CERTIFIES THAT THE DELAY IN PAYMENT OF THE MAINTENANCE FEE TO THIS PATENT WAS UNINTENTIONAL

PETITIONER(S) REQUEST THAT THE DELAYED PAYMENT OF THE MAINTENANCE FEE BE ACCEPTED AND THE PATENT REINSTATED

THIS PORTION MUST BE COMPLETED BY THE SIGNATORY OR SIGNATORIES

37 CFR 1.378(d) states: "Any petition under this section must be signed by an attorney or agent registered to practice before the Patent and Trademark Office, or by the patentee, the assignee, or other party in interest."

I certify, in accordance with 37 CFR 1.4(d)(4) that I am

○ An attorney or agent registered to practice before the Patent and Trademark Office

○ A sole patentee

◉ A joint patentee; I certify that I am authorized to sign this submission on behalf of all the other patentees.

○ A joint patentee; all of whom are signing this e-petition

○ The assignee of record of the entire interest

Under the Paperwork Reduction Act of 1995, no persons are required to respond to a collection of information unless it displays valid OMB control number.

A Joint Patentee and I certify that I am authorized to sign this submission on behalf of all the other patentees			
A signature of the applicant or representative is required in accordance with 37 CFR 1.33 and 10.18. Please see 37 CFR 1.4(d) for the form of the signature.			
Signature	/Chris R. Peters/	Date (YYYY-MM-DD)	2007-06-28
Name	Chris R. Peters		

This collection of information is required by 37 CFR 1.378(c). The information is required to obtain or retain a benefit by the public which is to file (and by the USPTO to process) an application. Confidentiality is governed by 35 U.S.C. 122 and 37 CFR 1.11 and 1.14. This collection is estimated to take 1 hour to complete, including gathering, preparing, and submitting the completed application form to the USPTO. Time will vary depending upon the individual case. Any comments on the amount of time you require to complete this form and/ or suggestions for reducing this burden, should be sent to the Chief Information Officer, U.S. Patent and Trademark Office, U.S. Department of Commerce, P.O. Box 1450, Alexandria, VA 22313-1450. DO NOT SEND FEES OR COMPLETED FORMS TO THIS ADDRESS. **This form can only be used when in conjunction with EFS-Web. If this form is mailed to the USPTO, it may cause delays in reinstating the patent.**

Privacy Act Statement

The Privacy Act of 1974 (P.L. 93-579) requires that you be given certain information in connection with your submission of the attached form related to a patent application or patent. Accordingly, pursuant to the requirements of the Act, please be advised that: (1) the general authority for the collection of this information is 35 U.S.C. 2(b)(2); (2) furnishing of the information solicited is voluntary; and (3) the principal purpose for which the information is used by the U.S. Patent and Trademark Office is to process and/or examine your submission related to a patent application or patent. If you do not furnish the requested information, the U.S. Patent and Trademark Office may not be able to process and/or examine your submission, which may result in termination of proceedings or abandonment of the application or expiration of the patent.

The information provided by you in this form will be subject to the following routine uses:

1. The information on this form will be treated confidentially to the extent allowed under the Freedom of Information Act (5 U.S.C. 552) and the Privacy Act (5 U.S.C. 552a). Records from this system of records may be disclosed to the Department of Justice to determine whether the Freedom of Information Act requires disclosure of these record s.

2. A record from this system of records may be disclosed, as a routine use, in the course of presenting evidence to a court, magistrate, or administrative tribunal, including disclosures to opposing counsel in the course of settlement negotiations.

3. A record in this system of records may be disclosed, as a routine use, to a Member of Congress submitting a request involving an individual, to whom the record pertains, when the individual has requested assistance from the Member with respect to the subject matter of the record.

4. A record in this system of records may be disclosed, as a routine use, to a contractor of the Agency having need for the information in order to perform a contract. Recipients of information shall be required to comply with the requirements of the Privacy Act of 1974, as amended, pursuant to 5 U.S.C. 552a(m).

5. A record related to an International Application filed under the Patent Cooperation Treaty in this system of records may be disclosed, as a routine use, to the International Bureau of the World Intellectual Property Organization, pursuant to the Patent Cooperation Treaty.

6. A record in this system of records may be disclosed, as a routine use, to another federal agency for purposes of National Security review (35 U.S.C. 181) and for review pursuant to the Atomic Energy Act (42 U.S.C. 218(c)).

7. A record from this system of records may be disclosed, as a routine use, to the Administrator, General Services, or his/her designee, during an inspection of records conducted by GSA as part of that agency's responsibility to recommend improvements in records management practices and programs, under authority of 44 U.S.C. 2904 and 2906. Such disclosure shall be made in accordance with the GSA regulations governing inspection of records for this purpose, and any other relevant (i.e., GSA or Commerce) directive. Such disclosure shall not be used to make determinations about individuals.

8. A record from this system of records may be disclosed, as a routine use, to the public after either publication of the application pursuant to 35 U.S.C. 122(b) or issuance of a patent pursuant to 35 U.S.C. 151. Further, a record may be disclosed, subject to the limitations of 37 CFR 1.14, as a routine use, to the public if the record was filed in an application which became abandoned or in which the proceedings were terminated and which application is referenced by either a published application, an application open to public inspections or an issued patent.

9. A record from this system of records may be disclosed, as a routine use, to a Federal, State, or local law enforcement agency, if the USPTO becomes aware of a violation or potential violation of law or regulation.

Under the Paperwork Reduction Act of 1995, no persons are required to respond to a collection of information unless it displays valid OMB control number.

PETITION TO ACCEPT UNINTENTIONALLY DELAYED PAYMENT OF MAINTENANCE FEE IN AN EXPIRED PATENT (37 CFR 1.378(c))

Patent Number	Issue Date (YYYY-MM-DD)	Application Number	Filing Date (YYYY-MM-DD)	Docket Number (if applicable)
6520068	2003-02-18	09520562	2000-03-08	051P-081210

CAUTION: Maintenance fee (and surcharge, if any) payment must correctly identify: (1) the patent number and (2) the application number of the actual U.S. application leading to issuance of that patent to ensure the fee(s) is/are associated with the correct patent. 37 CFR 1.366(c) and (d).

SMALL ENTITY
☒ Patentee claims, or has previously claimed, small entity status. See 37 CFR 1.27.

LOSS OF ENTITLEMENT TO SMALL ENTITY STATUS
☐ Patentee is no longer entitled to small entity status. See 37 CFR 1.27(g)

NOT Small Entity			Small Entity		
	Fee	Code		Fee	Code
○	3 ½ year	(1551)	◉	3 ½ year	(2551)
○	7 ½ year	(1552)	○	7 ½ year	(2552)
○	11 ½ year	(1553)	○	11 ½ year	(2553)

SURCHARGE
The surcharge required by 37 CFR 1.20(i)(2) (Fee Code 1558) must be paid as a condition of accepting unintentionally delayed payment of the maintenance fee.

MAINTENANCE FEE (37 CFR 1.20(e)-(g))
The appropriate maintenance fee must be submitted with this petition.

STATEMENT
THE UNDERSIGNED CERTIFIES THAT THE DELAY IN PAYMENT OF THE MAINTENANCE FEE TO THIS PATENT WAS UNINTENTIONAL

PETITIONER(S) REQUEST THAT THE DELAYED PAYMENT OF THE MAINTENANCE FEE BE ACCEPTED AND THE PATENT REINSTATED

THIS PORTION MUST BE COMPLETED BY THE SIGNATORY OR SIGNATORIES

37 CFR 1.378(d) states: "Any petition under this section must be signed by an attorney or agent registered to practice before the Patent and Trademark Office, or by the patentee, the assignee, or other party in interest."

I certify, in accordance with 37 CFR 1.4(d)(4) that I am

◉ An attorney or agent registered to practice before the Patent and Trademark Office

○ A sole patentee

○ A joint patentee; I certify that I am authorized to sign this submission on behalf of all the other patentees.

○ A joint patentee; all of whom are signing this e-petition

○ The assignee of record of the entire interest

Patent Practitioner			
A signature of the applicant or representative is required in accordance with 37 CFR 1.33 and 10.18. Please see 37 CFR 1.4(d) for the form of the signature			
Signature	/James R. Brueggemann/	Date (YYYY-MM-DD)	2007-08-09
Name	James R. Brueggemann	Registration Number	28286

This collection of information is required by 37 CFR 1.378(c). The information is required to obtain or retain a benefit by the public which is to file (and by the USPTO to process) an application. Confidentiality is governed by 35 U.S.C. 122 and 37 CFR 1.11 and 1.14. This collection is estimated to take 1 hour to complete, including gathering, preparing, and submitting the completed application form to the USPTO. Time will vary depending upon the individual case. Any comments on the amount of time you require to complete this form and/ or suggestions for reducing this burden, should be sent to the Chief Information Officer, U.S. Patent and Trademark Office, U.S. Department of Commerce, P.O. Box 1450, Alexandria, VA 22313-1450. DO NOT SEND FEES OR COMPLETED FORMS TO THIS ADDRESS. **This form can only be used when in conjunction with EFS-Web. If this form is mailed to the USPTO, it may cause delays in reinstating the patent.**

Privacy Act Statement

The Privacy Act of 1974 (P.L. 93-579) requires that you be given certain information in connection with your submission of the attached form related to a patent application or patent. Accordingly, pursuant to the requirements of the Act, please be advised that: (1) the general authority for the collection of this information is 35 U.S.C. 2(b)(2); (2) furnishing of the information solicited is voluntary; and (3) the principal purpose for which the information is used by the U.S. Patent and Trademark Office is to process and/or examine your submission related to a patent application or patent. If you do not furnish the requested information, the U.S. Patent and Trademark Office may not be able to process and/or examine your submission, which may result in termination of proceedings or abandonment of the application or expiration of the patent.

The information provided by you in this form will be subject to the following routine uses:

1. The information on this form will be treated confidentially to the extent allowed under the Freedom of Information Act (5 U.S.C. 552) and the Privacy Act (5 U.S.C. 552a). Records from this system of records may be disclosed to the Department of Justice to determine whether the Freedom of Information Act requires disclosure of these record s.

2. A record from this system of records may be disclosed, as a routine use, in the course of presenting evidence to a court, magistrate, or administrative tribunal, including disclosures to opposing counsel in the course of settlement negotiations.

3. A record in this system of records may be disclosed, as a routine use, to a Member of Congress submitting a request involving an individual, to whom the record pertains, when the individual has requested assistance from the Member with respect to the subject matter of the record.

4. A record in this system of records may be disclosed, as a routine use, to a contractor of the Agency having need for the information in order to perform a contract. Recipients of information shall be required to comply with the requirements of the Privacy Act of 1974, as amended, pursuant to 5 U.S.C. 552a(m).

5. A record related to an International Application filed under the Patent Cooperation Treaty in this system of records may be disclosed, as a routine use, to the International Bureau of the World Intellectual Property Organization, pursuant to the Patent Cooperation Treaty.

6. A record in this system of records may be disclosed, as a routine use, to another federal agency for purposes of National Security review (35 U.S.C. 181) and for review pursuant to the Atomic Energy Act (42 U.S.C. 218(c)).

7. A record from this system of records may be disclosed, as a routine use, to the Administrator, General Services, or his/her designee, during an inspection of records conducted by GSA as part of that agency's responsibility to recommend improvements in records management practices and programs, under authority of 44 U.S.C. 2904 and 2906. Such disclosure shall be made in accordance with the GSA regulations governing inspection of records for this purpose, and any other relevant (i.e., GSA or Commerce) directive. Such disclosure shall not be used to make determinations about individuals.

8. A record from this system of records may be disclosed, as a routine use, to the public after either publication of the application pursuant to 35 U.S.C. 122(b) or issuance of a patent pursuant to 35 U.S.C. 151. Further, a record may be disclosed, subject to the limitations of 37 CFR 1.14, as a routine use, to the public if the record was filed in an application which became abandoned or in which the proceedings were terminated and which application is referenced by either a published application, an application open to public inspections or an issued patent.

9. A record from this system of records may be disclosed, as a routine use, to a Federal, State, or local law enforcement agency, if the USPTO becomes aware of a violation or potential violation of law or regulation.

UNITED STATES PATENT AND TRADEMARK OFFICE

Commissioner for Patents
United States Patent and Trademark Office
P.O. Box 1450
Alexandria, VA 22313-1450
www.uspto.gov

In re Patent No. 6520068
Issue Date: February 18,2003
Application No. 09520562
Filed: March 8,2000
Attorney Docket No. ALST1715

:
:DECISION GRANTING PETITION
:UNDER 37 CFR 1.378(c)
:

This is a decision on the electronic petition, filed August 9,2007 ,under 37 CFR 1.378(c) to accept the unintentionally delayed payment of the 3.5 year maintenance fee for the above-identified patent.

The petition is GRANTED.

The maintenance fee is accepted, and the above-identified patent reinstated as of August 9,2007 . This decision also constitutes notice that the fee has been accepted. An electronic copy of the petition and this decision has been created as an entry in an Image File Wrapper. Nevertheless, petitioner should print and retain an independent copy

Telephone inquires related to this electronic decision should be directed to the Electronic Business Center at 1-866-217-9197.

UNITED STATES PATENT AND TRADEMARK OFFICE

COMMISSIONER FOR PATENTS
UNITED STATES PATENT AND TRADEMARK OFFICE
P.O. BOX 1450
ALEXANDRIA, VA 22313-1450
www.uspto.gov

COPY MAILED

FEB 17 2004

OFFICE OF PETITIONS

BRINKS HOFER GILSON & LIONE
ONE INDIANA SQUARE, SUITE 1600
INDIANAPOLIS, INDIANA 46204

In re Application of
Edy S. Liongosari
Application No. 09/520,578
Filed: March 8, 2000
Attorney Docket No. AND1P510

ON PETITION

This is a decision on the petition, filed February 13, 2004, under 37 CFR 1.313(c)(2) to withdraw the above-identified application from issue after payment of the issue fee.

The petition is **GRANTED**.

The above-identified application is withdrawn from issue for consideration of a submission under 37 CFR 1.114 (request for continued examination). See 37 CFR 1.313(c)(2).

Petitioner is advised that the issue fee paid on June 30, 2003 in the above-identified application cannot be refunded. If, however, the above-identified application is again allowed, petitioner may request that it be applied towards the issue fee required by the new Notice of Allowance.[1]

Telephone inquiries should be directed to Irvin Dingle at (703) 306-5684.

After receipt of the file in the Office of Petitions, the file will be forwarded to Technology Center AU 2121 for processing of the request for continued examination under 37 CFR 1.114 and for consideration of the concurrently filed Information Disclosure Statement.

Irvin Dingle
Petitions Examiner
Office of Petitions
Office of the Deputy Commissioner
for Patent Examination Policy

---

[1] The request to apply the issue fee to the new Notice may be satisfied by completing and returning the new Issue Fee Transmittal Form PTOL-85(b), which includes the following language thereon: "Commissioner for Patents is requested to apply the Issue Fee and Publication Fee (if any) or re-apply any previously paid issue fee to the application identified above." Petitioner is advised that, whether a fee is indicated as being due or not, the Issue Fee Transmittal Form **must** be completed and timely submitted to avoid abandonment. Note the language in bold text on the first page of the Notice of Allowance and Fee(s) Due (PTOL-85).

Petition Maintenance

File Edit View Show

Application

Application No: 09520578 Patent No: Clear

Title of Invention: KNOWLEDGE MODEL-BASED INDEXING OF INFORMATION

Filing Date: 03/08/2000 Issue Date:

Inventor Name: LIONGOSARI, EDY S

Mailroom Date	Match	Initial Type	Decided Type	Decision	Decision Date
02/13/2004	Y	505	505	GRANTED	02/18/2004

Petition Detail

Mailroom Date *:

Cert of Mail Date:

Initial Petition Type *:

Initial Deciding * Office:

☑ Matched to Application

☐ Reconsidered/Renewed

Decision: <NONE>

Decision Date: ☐ Next Business Day

Decided Petition Type:

Final Deciding Office:

Petitions Examiner:

Add | Update | Delete Decision | Reprint

Click to work on Dispatch and Receive processing

lidingle

UNITED STATES PATENT AND TRADEMARK OFFICE

Commissioner for Patents
United States Patent and Trademark Office
P.O. Box 1450
Alexandria, VA 22313-1450
www.uspto.gov

Oppenheimer Wolff & Donnelly, LLP
Plaza VII, Suite 3300
45 South Seventh Street
Minneapolis, MN 55402

COPY MAILED

SEP 16 2005

OFFICE OF PETITIONS

In re Application of	:	
Andrew E. Fano, et al.	:	
Application No. 09/520,580	:	ON PETITION
Filed: March 8, 2000	:	
Attorney Docket No. AND1P529	:	

This is a decision on the petition under 37 CFR 1.137(b), filed July 25, 2005, to revive the above-identified application.

The petition is **GRANTED**.

The petition satisfies the requirements of 37 CFR 1.137(b) in that petitioner has supplied (1) the reply in the form of a Request for Continued Examination (RCE) under 37 CFR 1.114; (2) the petition fee of $1500; and (3) an adequate statement of unintentional delay.

This application is being revived for consideration of the RCE.

Telephone inquiries concerning this decision should be directed to the undersigned at (571) 272-3223.

The application file is being referred to Technology Center 2100.

Marianne E. Jenkins
Petitions Examiner
Office of Petitions

UNITED STATES PATENT AND TRADEMARK OFFICE

COMMISSIONER FOR PATENTS
UNITED STATES PATENT AND TRADEMARK OFFICE
WASHINGTON, DC 20231
www.uspto.gov

MAIL Paper No. 4

APR 1 2003

DIRECTOR OFFICE
TECHNOLOGY CENTER 2600

BAKER & MCKENZIE
805 THIRD AVENUE
NEW YORK NY 10022

In re Application of :
Garry Gu :
Application No. 09/520,677 :
Filed: March 7, 2000 :
For: **CREDIT-BASED ADAPTIVE FLOW CONTROL FOR MULTI-STAGE MULTI-DIMENSIONAL SWITCHING ARCHITECTURE** :

DECISION ON REQUEST TO WITHDRAW AS ATTORNEY

This is a decision on the request to withdraw as attorney/agent of record filed on March 10, 2003.

A grantable request to withdraw as attorney/agent of record must:
(1) indicate the present mailing address of the attorney(s)/agent(s) who seek(s) to withdraw, and
(2) be signed by each attorney/agent seeking to withdraw or clearly be signed on their behalf, and
(3) be *approved* at least thirty (30) days prior to the maximum extendable period for response to any outstanding Office Action, and
(4) indicate the address to which future correspondence should be mailed.

Petitioner has met all of the above. Accordingly, the request is **GRANTED**.

All attorneys and agents of record in this application are removed from record.

All future communications from the Office will be directed to the address listed below until otherwise notified by applicant. Applicant is reminded of the obligation to promptly notify the Patent and Trademark Office of any change in correspondence address to ensure receipt of all communications from the Office.

Krista Zele
Special Program Examiner
Technology Center 2600
Communications
(703) 305-4701

cc: Ms. Susan Curry
Lucent Technologies, Inc.
101 Crawfords Corner Road, Room 3J-220
Holmdel, NJ 07733-3030

UNITED STATES PATENT AND TRADEMARK OFFICE

COMMISSIONER FOR PATENTS
UNITED STATES PATENT AND TRADEMARK OFFICE
WASHINGTON, D.C. 20231
www.uspto.gov

Paper No. 9

Wagner Marabout & Hao LLP
Two North Market Street Third Floor
San Jose, CA 95113

COPY MAILED

JUN 2 0 2002

OFFICE OF PETITIONS

In re Application of :
Hubbard, et al. :
Application No. 09/520,686 :
Filed: March 7, 2000 : DECISION REFUSING STATUS
Attorney Docket No. VLSI-3234 : UNDER 37 CFR 1.47(a)
For: WAFER TARGET DESIGN AND :
METHOD FOR DETERMINING :
CENTROID OF WAFER TARGET :

This is in response to the renewed petition under 37 CFR 1.47(b), filed January 22, 2002. This is also a decision on the request for withdrawal as attorney under 37 CFR 10.40(c), filed February 12, 2002, and the revocation of power of attorney and appointment of new attorney, filed March 21, 2002.

DECISION ON RENEWED PETITION UNDER 37 CFR 1.47(a)

The above-identified application was filed March 7, 2000 without an executed oath or declaration and naming Bryan Hubbard and Pierre Leroux as joint inventors. Accordingly, on May 9, 2000, a Notice to File Missing Parts of Nonprovisional Application ("Notice") was mailed, requiring an executed oath or declaration, a surcharge for its late filing, and the statutory basic filing fee. A petition under 37 CFR 1.47(a) was filed July 18, 2000 and dismissed November 26, 2001.

A grantable petition under 37 CFR 1.47(a) requires: (1) proof that the non-signing inventor cannot be reached or refuses to sign the oath or declaration after having been presented with the application papers (specification, claims and drawings); (2) an acceptable oath or declaration in compliance with 35 USC §§ 115 and 116; (3) the petition fee; and (4) a statement of the last known address of the non-signing inventor.

The instant petition lacks item (2) set forth above. In response to the dismissal of petition under 37 CFR 1.47(a) mailed November 26, 2001, petitioner has submitted an executed declaration by the non-signing inventor. The declaration is deemed unacceptable as it fails to comply with the provisions of 37 CFR 1.63 and 37 CFR 1.64. The declaration fails to identify and provide the requisite information for each inventor named in the application.

Accordingly, the petition is hereby **DISMISSED**.

Rule 47 applicant is given TWO MONTHS from the mailing date of this decision to reply, correcting the below-noted deficiencies. Any reply should be entitled "Request for Reconsideration of Petition Under 37 CFR 1.47(a)," and should only address the deficiencies noted below. Failure to respond will result in abandonment of the application. Any extensions of time will be governed by 37 CFR 1.136(a).

Application No. 09/520,686

Any renewed petition must be accompanied by an oath or declaration in compliance with 37 CFR 1.63 and 37 CFR 1.64.

DECISION ON REQUEST FOR WITHDRAWAL OF ATTORNEY

A grantable request to withdraw as attorney of record should indicate thereon the present mailing addresses of the attorney(s) who is/are withdrawing from the record and of the applicant. The request for withdrawal must be signed by every attorney seeking to withdraw or contain a clear indication that one attorney is signing on behalf of another/others. A request to withdraw will not be approved unless at least 30 (thirty) days would remain between the date of approval and the later of the expiration date of a time to file a response or the expiration date of the maximum time period which can be extended under 37 CFR 1.136(a). The effective date of withdrawal being the date of decision and not the date of request. *See*, MPEP 402.06. The provisions of 37 CFR 1.36 further require that applicant or patent owner be notified of the withdrawal of the attorney or agent.

Power of Attorney to petitioner has been revoked by the assignee. Accordingly, the request for withdrawal is **DISMISSED AS MOOT**.

A courtesy copy of this decision is being mailed to petitioner at the address on the petition, however, all future communications from the Office will be directed to the below-listed correspondence address unless the Office receives proper notification otherwise.

NOTICE OF REVOCATION OF POWER OF ATTORNEY AND APPOINTMENT OF NEW ATTORNEY

The revocation of power of attorney submitted by assignee on March 21, 2002 has been entered, in part, into the record. P Zawilski and H. Tsiang have appointed to represent applicant. G. Le Pennec has not been entered into the record as assignee has failed to provide a copy of G. Le Pennec's Limited Recognition Form from the Office of Enrollment and Discipline recognizing G. Le Pennec as eligible for limited recognition before the Office.

All future correspondence related to the instant application for patent will be addressed to the below-listed correspondence address unless the Office receives proper notification otherwise.

Further correspondence with regard to the petition under 37 CFR 1.47(a) should be addressed as follows:

By mail: Commissioner for Patents
Box DAC
Washington, D.C. 20231

By fax: (703) 308-6916
Attn.: Office of Petitions

Application No. 09/520,686

By hand: Crystal Plaza Four, Suite 3C23
2201 S. Clark Place
Arlington, VA

Telephone inquiries regarding this decision should be directed to the undersigned at (703) 305-0310.

Alesia M. Brown
Petitions Attorney
Office of Petitions
Office of the Deputy Commissioner
for Patent Examination Policy

CC: PETER S. ZAWILSKI
CORPORATE PATENT COUNSEL
PHILIPS ELECTRONICS NORTH AMER4ICA CORPORATION
580 WHITE PLAINS ROAD
TARRYTOWN, NY 10591

UNITED STATES PATENT AND TRADEMARK OFFICE

COMMISSIONER FOR PATENTS
UNITED STATES PATENT AND TRADEMARK OFFICE
P.O. BOX 1450
ALEXANDRIA, VA 22313-1450
WWW.USPTO.GOV

Paper No. 16

COPY MAILED

JUN 23 2003

OFFICE OF PETITIONS

PHILIPS ELECTRONICS NORTH AMERICA CORPORATION
INTELLECTUAL PROPERTY & STANDARDS
1000 WEST MAUDE AVENUE
SUNNYVALE, CA 94085-2810

In re Application of Hubbard, et al. Application No. 09/520,686 Filed: March 7, 2000 Attorney Docket No. VLSI-3234 For: WAFER TARGET DESIGN AND METHOD FOR DETERMINING CENTROID OF WAFER TARGET	DECISION NOTING JOINDER OF INVENTOR AND PETITION UNDER 37 CFR 1.47(a) MOOT

This decision is in response to the renewed petition under 37 CFR 1.47(a) filed June 18, 2003.

In view of the joinder of the inventor, further consideration under 37 CFR 1.47(a) is not necessary and the petition is considered to be moot. This application does not have any Rule 1.47(a) status and no such status should appear on the file wrapper. This application need not be returned to this Office for further consideration under 37 CFR 1.47(a).

This application is being forwarded to the Office of Initial Patent Examination for further processing.

Telephone inquiries related to this decision may be directed to the undersigned at (703) 305-0310.

Alesia M. Brown
Petitions Attorney
Office of Petitions

UNITED STATES PATENT AND TRADEMARK OFFICE

COMMISSIONER FOR PATENTS
UNITED STATES PATENT AND TRADEMARK OFFICE
P.O. BOX 1450
ALEXANDRIA, VA 22313-1450
WWW.USPTO.GOV

Paper No. 15

PHILIPS ELECTRONICS NORTH AMERICA CORPORATION
INTELLECTUAL PROPERTY & STANDARDS
1000 WEST MAUDE AVENUE
SUNNYVALE, CA 94085-2810

COPY MAILED

JUN 23 2003

OFFICE OF PETITIONS

In re Application of
Hubbard, et al.
Application No. 09/520,686
Filed: March 7, 2000
Attorney Docket No. VLSI-3234
For: WAFER TARGET DESIGN AND METHOD FOR DETERMINING CENTROID OF WAFER TARGET

DECISION GRANTING PETITION UNDER 37 CFR 1.137(b)

This is a decision on the petition under 37 CFR 1.137(b) filed June 18, 2003 to revive the above-identified application.

The petition under 37 CFR 1.137(b) is **GRANTED**.

This application became abandoned August 21, 2002 for failure to timely reply to a decision on petition mailed Jun 20, 2002. The decision on petition set a two (2) month period of time for reply. No extensions of time in accordance with 37 CFR 1.136(a) were obtained. Notice of Abandonment was mailed March 7, 2003.

This application is being forwarded to Technology Center 2700 for further processing.

Telephone inquiries related to this decision may be directed to the undersigned at (703) 305-0310.

Alesia M. Brown
Petitions Attorney
Office of Petitions

UNITED STATES PATENT AND TRADEMARK OFFICE

COMMISSIONER FOR PATENTS
UNITED STATES PATENT AND TRADEMARK OFFICE
WASHINGTON, D.C. 20231
www.uspto.gov

Paper No. 5

Wagner Murabito & Hao LLP
Two North Market Street Third Floor
San Jose, CA 95113

COPY MAILED

NOV 2 6 2001

OFFICE OF PETITIONS

In re Application of :
Hubbard, et al. :
Application No. 09/520,686 :
Filed: March 7, 2000 : DECISION REFUSING STATUS
Attorney Docket No. VLSI-3234 : UNDER 37 CFR 1.47(a)
For: WAFER TARGET DESIGN AND :
METHOD FOR DETERMINING CENTROID :
OF WAFER TARGET :

This is in response to the petition under 37 CFR 1.47(b), filed July 18, 2000. This petition is being treated under 37 CFR 1.47(a) due to the fact that petitioner has submitted a declaration properly executed by at least one of the named inventors.

The petition under 37 CFR 1.47(a) is **DISMISSED**.

Rule 47 applicant is given TWO MONTHS from the mailing date of this decision to reply, correcting the below-noted deficiencies. Any reply should be entitled "Request for Reconsideration of Petition Under 37 CFR 1.47(a)," and should only address the deficiencies noted below, except that the reply may include an oath or declaration executed by the non-signing inventor. Failure to respond will result in abandonment of the application. Any extensions of time will be governed by 37 CFR 1.136(a).

The above-identified application was filed March 7, 2000 without an executed oath or declaration and naming Bryan Hubbard and Pierre Leroux as joint inventors. Accordingly, on May 9, 2000, a Notice to File Missing Parts of Nonprovisional Application ("Notice") was mailed, requiring an executed oath or declaration, a surcharge for its late filing, and the statutory basic filing fee. The instant petition was filed in response.

A grantable petition under 37 CFR 1.47(a) requires: (1) proof that the non-signing inventor cannot be reached or refuses to sign the oath or declaration after having been presented with the application papers (specification, claims and drawings); (2) an acceptable oath or declaration in compliance with 35 USC §§ 115 and 116; (3) the petition fee; and (4) a statement of the last known address of the non-signing inventor.

Petitioner lacks item (1) set forth above. Petitioner has failed to establish that the non-signing inventor cannot be reached or refuses to sign the oath or declaration after having been presented with the application papers (specification, claims, and drawings). The declaration of Mr. Wagner states that on several occasions the application papers were sent to the non-signing inventor at the non-signing inventor's work address and that petitioner either received no

response or the package containing the application papers was returned as undeliverable.

Customarily, a last known address refers to a last known residential address rather than a business address. Petitioner has provided no explanation as to why a copy of the application papers was not forwarded to the inventor at the inventor's last known residential address.

To the extent that the application papers were forwarded to the inventor's last known business address, petitioner has failed to provide evidence that the inventor actually received the application papers and thereafter refused to execute the oath or declaration. Specifically, the instant petition lacks copies of the cover letters accompanying the application papers (specification, claims, and drawings) and mailing receipts to establish that the inventor in fact received the package containing the application papers.

Petitioner is reminded that "before a refusal can be alleged, it must be demonstrated that a *bona fide* attempt was made to present a copy of the application papers (specification, including claims, drawings, and oath or declaration) to the non-signing inventor for signature. A copy of the application papers should be sent to the last known address of the non-signing inventor, or, if the non-signing inventor is represented by counsel, to the address of the non-signing inventor's attorney." *See*, MPEP 409.03(d).

Any renewed petition must be accompanied by sufficient evidence to establish that the inventor received the application papers (specification, claims, and drawings) and thereafter failed to respond to requests to execute the oath or declaration.

Further correspondence with respect to this matter should be addressed as follows:

By mail: Commissioner for Patents
Box DAC
Washington, D.C. 20231

By FAX: (703) 308-6916
Attn.: Office of Petitions

By hand: Crystal Plaza Four, Suite 3C23
2201 S. Clark Place
Arlington, VA

Telephone inquiries regarding this decision should be directed to Petitions Attorney Alesia M. Brown at (703) 305-0310.

Beverly M. Flanagan
Supervisory Petitions Examiner
Office of Petitions
Office of the Deputy Commissioner
for Patent Examination Policy

UNITED STATES
PATENT AND
TRADEMARK OFFICE

Under Secretary of Commerce for Intellectual Property and
Director of the United States Patent and Trademark Office
Washington, DC 20231
www.USPTO.gov

Paper No. 15

David H. Brinkman
Wood, Herron and Evans, LLP
2700 Carew Tower
441 Vine Street
Cincinnati, OH 45202

COPY MAILED

SEP 2 1 2001

OFFICE OF PETITIONS

In re Application of :
Thomas J. Larkner, et al. :
Application No. 09/520,827 : ON PETITION
Filed: March 8, 2000 :
Attorney Docket No. BARN-92 :

This is a decision on the petition, filed September 4, 2001, under 37 CFR 1.313(c)(2) to withdraw the above-identified application from issue after payment of the issue fee.

The petition is **GRANTED**.

The above-identified application is withdrawn from issue for consideration of a submission under 37 CFR 1.114 (request for continued examination). See 37 CFR 1.313(c)(2).
Petitioner is advised that the issue fee paid on August 8, 2001 in the above-identified application cannot be refunded. If, however, the above-identified application is again allowed, petitioner may request that it be applied towards the issue fee required by the new Notice of Allowance.

Telephone inquiries should be directed to the undersigned at (703) 306-3475.

The application is being forwarded to Technology Center AU 1723 for processing of the request for continued examination under 37 CFR 1.114

Marianne E. Morgan
Petitions Examiner
Office of Petitions
Office of the Deputy Commissioner
for Patent Examination Policy

UNITED STATES PATENT AND TRADEMARK OFFICE

Commissioner for Patents
United States Patent and Trademark Office
P.O. Box 1450
Alexandria, VA 22313-1450
www.uspto.gov

Francis I Gray
Tektronix Inc
PO Box 500
Delivery Station 50-LAW
Beaverton OR 97077

COPY MAILED

NOV 0 8 2005

OFFICE OF PETITIONS

In re Application of
Cleary, et al.
Application No. 09/520,927
Filed: March 8, 2000
Attorney Docket No. 6960 US

ON PETITION

This is a decision on the petition under 37 CFR 1.137(b), filed September 22, 2005 to revive the above-identified application.

The petition is **GRANTED**.

This application became abandoned for failure to timely pay the issue fee and publication fee on or before June 24, 2005, as was required by the Notice of Allowance and Fee(s) Due, mailed March 24, 2005. The filing of the present petition precedes the mailing of A Notice of Abandonment.

Petitioners have submitted the issue fee, the publication fee, and a completed PTOL-85 as the reply, an acceptable statement of the unintentional nature of the delay in responding to the March 24, 2005 Notice of Allowance and Fee(s) Due, and the required revival petition and fee. Therefore, the petition is granted.

This application is being forwarded to the Publishing Division to be processed into a patent.

Telephone inquiries regarding this decision may be directed to the undersigned at (571) 272-3230.

E Shirene Willis

E. Shirene Willis
Senior Petitions Attorney
Office of Petitions
Office of the Deputy Commissioner
for Patent Examination Policy

UNITED STATES PATENT AND TRADEMARK OFFICE

UNDER SECRETARY OF COMMERCE FOR INTELLECTUAL PROPERTY AND
DIRECTOR OF THE UNITED STATES PATENT AND TRADEMARK OFFICE
WASHINGTON, D.C. 20231
www.uspto.gov

APR 20 2001

Paper No. 3

In re Application of
Robert Grosz
Application No. 09/521,015
Filed: March 7, 2000
For: Thin Walled Silver Filled Gold Jewelry

: DECISION ON PETITION

This is a decision on the petition to make special filed on April 3, 2001, by which petitioner seeks special status for advanced examination out of turn on the basis of "Manufacture".

The petition is dismissed.

In accordance with the practice established in MPEP 708.02(I), an application may be made special on the ground of prospective manufacture upon the filing of a petition accompanied by the fee under 37 CFR 1.17(i) and a statement by the applicant, assignee or an attorney/agent registered to practice before the PTO alleging:

(A) The possession by the prospective manufacturer of sufficient presently available capital (stating approximately the amount) and facilities (stating briefly the nature thereof) to manufacture the invention in quantity or that sufficient capital and facilities will be made available if a patent is granted; If the prospective manufacturer is an individual, there must be a corroborating statement from some responsible party, as for example, an officer of a bank, showing that said individual has the required available capital to manufacture;

(B) That the prospective manufacturer will not manufacture, or will not increase present manufacture, unless certain that the patent will be granted;

(C) That the prospective manufacturer obligates himself, herself or itself, to manufacture the invention, in the United States or its possessions, in quantity immediately upon the allowance of claims or issuance of a patent which will protect the investment of capital and facilities; and

(D) That the applicant or assignee has made or caused to be made a careful and thorough search of the prior art, or has a good knowledge of the pertinent prior art. Applicant must provide one copy of each of the references deemed most closely related to the subject matter encompassed by the claims if said references are not already of record.

The instant petition lacks items (1)-(4) above.

With respect to item (A), it is noted that the inventor has signed a declaration in support of the instant petition. If the inventor were signing on behalf of himself as an individual, a corroborating statement with respect to the availability of the capital necessary to manufacture the invention would be required. If the inventor is in fact signing as an Officer of the assignee (as appears to be the case), then it is necessary that a certification pursuant to 37 CFR 3.73(b) be submitted establishing the assignee's right to take action in this matter.

The same issue regarding the lack of a 37 CFR 3.73(b) certification exists with respect to items

(B) and (C). In addition, with respect to item (C), it is noted that the assignee does not state that it obligates itself to manufacture the invention in quantity immediately upon allowance of claims or issuance of the patent. Moreover, it does not appear that any manufacturing will take place in the United States or its possessions.

With respect to item (D), petitioner has not submitted one copy of each prior art reference deemed most closely related to the claimed subject matter, although petitioner has stated that petitioner is aware of prior art by reason of having prosecuted a parent patent application.

Petitioner may submit a renewed petition, without additional fee, addressing the above matters. The renewed petition must, however, be submitted within two months of the date of this Decision, see 37 CFR 1.181(f). The renewed petition may be filed by mail, in an envelope addressed to:

Assistant Commissioner for Patents
Washington, DC 20231

and addressed to the attention of the undersigned. Alternatively, the renewed petition may be filed by facsimile transmission to (703) 305-3762. Questions regarding this decision may be addressed to the undersigned by telephone at (703) 308-3872.

The application is being retained in the Technology Center 3700 Central Files awaiting appropriate action by petitioner, or initial consideration by the examiner.

PETITION DISMISSED.

Stephen Marcus, Special Program Examiner
Patent Examining Groups 3710 and 3720

Alfred M. Walker
225 Old Country Road
Melville, NY 11747

UNITED STATES PATENT AND TRADEMARK OFFICE

1714

COMMISSIONER FOR PATENTS
UNITED STATES PATENT AND TRADEMARK OFFICE
P.O. BOX 1450
ALEXANDRIA, VA 22313-1450
www.uspto.gov

MR. ANTHONY CAMAROTA
AVTEC INDUSTRIES
15 BROADS STREET
HUDSON, MA 01749

COPY MAILED

DEC 0 9 2003

OFFICE OF PETITIONS

In re Application of :
Anthony S. Camarota et al :
Application No. 09/521,074 : ON PETITION
Filed: March 7, 2000 :
Attorney Docket No. Avtec-501 :

This is a decision on the petition under 37 CFR 1.137(b), filed December 4, 2003, to revive the above-identified application.

The petition is **GRANTED**.

The above-identified application became abandoned for failure to reply within the meaning of 37 CFR 1.113 in a timely manner to the final Office action mailed January 14, 2003, which set a shortened statutory period for reply of three (3) months. A reply under 37 CFR 1.113 is limited to an amendment that *prima facie* places the application in condition for allowance or a Notice of Appeal (and appeal fee required by 37 CFR 1.17(b)). Since the amendment submitted does not *prima facie* placing the application in condition for allowance, no Notice of Appeal (and appeal fee), or a request for continuing application under 37 CFR 1.114 was timely filed. No extensions of time under the provisions of 37 CFR 1.136(a) were obtained. Accordingly, the above-identified application became abandoned on April 15, 2003.

It is not apparent whether the person signing the statement of unintentional delay was in a position to have firsthand or direct knowledge of the facts and circumstances of the delay at issue. Nevertheless, such statement is being treated as having been made as the result of a reasonable inquiry into the facts and circumstances of such delay. See 37 CFR 10.18(b) and Changes to Patent Practice and Procedure; Final Rule Notice, 62 Fed. Reg. 53131, 53178 (October 10, 1997), 1203 Off. Gaz. Pat. Office 63, 103 (October 21, 1997). In the event that such an inquiry has not been made, petitioner must make such an inquiry. If such inquiry results in the discovery that it is not correct that the entire delay in filing the required reply from the due date for the reply until the filing of a grantable petition pursuant to 37 CFR 1.137(b) was unintentional, petitioner must notify the Office.

There is no indication that the person signing the instant petition was ever given a

power of attorney or authorization of agent to prosecute the above-identified application. If the person signing the instant petition desires to receive future correspondence regarding this application, the appropriate power of attorney or authorization of agent must be submitted. While a courtesy copy of this decision is being mailed to the person signing the instant petition, all future correspondence will be directed to the address of currently of record until such time as appropriate instructions are received to the contrary.

Telephone inquiries concerning this decision should be directed to Wan Laymon at (703) 305-9282.

The application file is being forwarded to Technology Center AU 1714 for processing of the request for continued examination (RCE) under 37 CFR 1.114.

Wan Laymon

Wan Laymon
Petitions Examiner
Office of Petitions
Office of the Deputy Commissioner
for Patent Examination Policy

cc: MR. JOHN B. HERRING
AVTEC INDUSTRIES
9 KANE INDUSTRIAL DRIVE
HUDSON, MA 01749

UNITED STATES PATENT AND TRADEMARK OFFICE

Commissioner for Patents
United States Patent and Trademark Office
P.O. Box 1450
Alexandria, VA 22313-1450
www.uspto.gov

Mailed: 5/6/05

caf
Paper Number

In re application of	:	
Camarota, et al.	:	DECISION ON
Serial No. 09/521,074	:	PETITION
Filed: March 7, 2000	:	
For: FLAME RETARDANT AND SMOKE SUPRESSIVE	:	
ADDITIVE POWDER FOR POLYMERIC	:	
THERMOPLASTICS AND THERMOSET RESINS	:	

This is a response to the PETITION TO WITHDRAW HOLDING OF ABANDONMENT BASED ON EVIDENCE THAT A REPLY WAS TIMELY MAILED OR FILED, filed March 7, 2005. The response asks that the abandonment, as set forth in the Notice of Abandonment of January 3, 2005, be withdrawn since the applicant did timely file a response on May 18, 2004.

DECISION

The instant request has been accepted as a petition to withdraw the holding of abandonment under the provisions of 37 CFR 1.181 (no fee) - no abandonment-in-fact. A review of the USPTO application file reveals that although the issue fee was submitted on May 18, 2004 in response to an improper notice of allowance mailed March 4, 2004, no response was submitted to the proper notice of allowance mailed August 10, 2004. The notice of allowance mailed August 10, 2004 states "THE PTOL-85B (OR AN EQUIVALENT) MUST BE RETURNED WITHIN THIS PERIOD EVEN IF NO FEE IS DUE OR THE APPLICATION WILL BE REGARDED AS ABANDONED". Since applicant did not submit the PTOL-85B (or an equivalent) by the due date of November 10, 2004 set forth in the notice of allowance mailed August 10, 2004, the application is regarded as abandoned.

The application is still held abandoned.

The Petition is **DISMISSED**.

JMStone

Jacqueline Stone, Director
Technology Center 1700
Chemical and Materials Engineering

Attention:
Mr. Anthony Camarota
Avtec Industries
15 Broad Street
Hudson, MA 01749

UNITED STATES PATENT AND TRADEMARK OFFICE

Commissioner for Patents
United States Patent and Trademark Office
P.O. Box 1450
Alexandria, VA 22313-1450
www.uspto.gov

MR ANTHONY CAMAROTA
AVTEC INDUSTRIES
15 BROADS STREET
HUDSON, MA 01749

COPY MAILED

FEB 07 2006

OFFICE OF PETITIONS

In re Application of	:	
Anthony S. Camarota et al	:	
Application No. 09/521,074	:	ON PETITION
Filed: March 7, 2000	:	
For: FLAME RETARDANT AND SMOKE SUPRESSIVE ADDITIVE POWDER FOR POLYMERIC THERMOPLASTICS AND THERMOSET RESINS	:	

This is a decision on the petition under 37 CFR 1.137(b), filed August 1, 2005, to revive the above-identified application.

The petition is **GRANTED**.

The above-identified application became abandoned for failure to submit the issue fee in a timely manner in reply to the Notice of Allowance And Fee(S) Due and Notice of Allowability mailed August 10, 2004, which set a statutory period for reply of three (3) months. Accordingly, the above-identified application became abandoned on November 11, 2004.

The petition satisfies the conditions for revival pursuant to the provisions of 37 CFR 1.137(b) in that (1) the reply in the form of an issue fee; (2) the petition fee; and (3) the required statement of unintentionally delay have been received. Accordingly, the issue fee is accepted as having been unintentional delayed.

Telephone inquiries concerning this decision should be directed to Wan Laymon at (571) 272-3220.

This matter is being referred to Publishing Division.

Wan Laymon
Petitions Examiner
Office of Petitions

UNITED STATES PATENT AND TRADEMARK OFFICE

COMMISSIONER FOR PATENTS
UNITED STATES PATENT AND TRADEMARK OFFICE
P.O. BOX 1450
ALEXANDRIA, VA 22313-1450
www.uspto.gov

WELLS ST. JOHN P.S.
601 W. FIRST AVENUE, SUITE 1300
SPOKANE, WA 99201

COPY MAILED
JAN 0 4 2006
OFFICE OF PETITIONS

In re Application of :
Scott E. Moore, et al. :
Application No. 09/521,092 :
Filed: March 7, 2000 :
Attorney Docket No.: MI22-1370 :
:

ON PETITION

This is a decision on the petition, filed December 30, 2005, under 37 CFR 1.313(c)(2) to withdraw the above-identified application from issue after payment of the issue fee.

The petition is **GRANTED**.

The above-identified application is withdrawn from issue for consideration of a submission under 37 CFR 1.114 (request for continued examination). See 37 CFR 1.313(c)(2).

Petitioner is advised that the issue fee paid on August 11, 2005, in the above-identified application, cannot be refunded. If, however, the above-identified application is again allowed, petitioner may request that it be applied towards the issue fee required by the new Notice of Allowance.[1]

Telephone inquiries relating to this decision should be directed to the undersigned at (571) 272-3204.

The application is being referred to Technology Center AU 3723 for further processing of the request for continued examination under 37 CFR 1.114.

Sherry D. Brinkley
Petitions Examiner
Office of Petitions

[1]The request to apply the issue fee to the new Notice may be satisfied by completing and returning the new Issue Fee Transmittal Form PTOL-85(b), which includes the following language thereon: "Commissioner for Patents is requested to apply the Issue Fee and Publication Fee (if any) or re-apply any previously paid issue fee to the application identified above." Petitioner is advised that, whether a fee is indicated as being due or not, the Issue Fee Transmittal Form **must** be completed and timely submitted to avoid abandonment. Note the language in bold text on the first page of the Notice of Allowance and Fee(s) Due (PTOL-85).

UNITED STATES PATENT AND TRADEMARK OFFICE

Commissioner for Patents
United States Patent and Trademark Office
P.O. Box 1450
Alexandria, VA 22313-1450
www.uspto.gov

WELLS ST. JOHN P.S.
601 W. FIRST AVENUE, SUITE 1300
SPOKANE, WA 99201

COPY MAILED
JUN 30 2006
OFFICE OF PETITIONS

In re Application of	:
Scott E. Moore et al	:
Application No. 09/521,092	: DECISION GRANTING PETITION
Filed: March 7, 2000	: UNDER 37 CFR 1.313(c)(2)
Attorney Docket No. M122-1370	:

This is a decision on the petition, filed June 28, 2006, under 37 CFR 1.313(c)(2) to withdraw the above-identified application from issue after payment of the issue fee.

The petition is **GRANTED**.

The above-identified application is withdrawn from issue for consideration of a submission under 37 CFR 1.114 (request for continued examination). See 37 CFR 1.313(c)(2).

Petitioner is advised that the issue fee paid in the above-identified application cannot be refunded. If, however, the above-identified application is again allowed, petitioner may request that it be applied towards the issue fee required by the new Notice of Allowance.[1]

Telephone inquiries should be directed to the undersigned at (571) 272-3218.

This matter is being referred to Technology Center AU 3723 for processing of the request for continued examination under 37 CFR 1.114 and for consideration of the concurrently filed amendment and Information Disclosure Statement.

Frances Hicks
Petitions Examiner
Office of Petitions

C:\Documents and Settings\FHicks\My Documents\470\June9\521092.wpd

---

[1] *The request to apply the issue fee to the new Notice may be satisfied by completing and returning the new Part B – Fee(s) Transmittal Form (along with any balance due at the time of submission), which includes the following language thereon: "The Director of the USPTO is requested to apply the Issue Fee and Publication Fee (if any) or to re-apply any previously paid issue fee in the application identified above. Petitioner is advised that, whether a fee is indicated as being due or not, the Issue Fee Transmittal Form* ***must*** *be completed and timely submitted to avoid abandonment. Note the language in bold text on the first page of the Notice of Allowance and Fee(s) Due (PTOL-85).*

UNITED STATES PATENT AND TRADEMARK OFFICE

COMMISSIONER FOR PATENTS
UNITED STATES PATENT AND TRADEMARK OFFICE
P.O. BOX 1450
ALEXANDRIA, VA 22313-1450
www.uspto.gov

C. IRVIN MCCLELLAND
OBLON, SPIVAK, MCCLELLAND, MAIER & NEUSTADT, P.C.
1940 DUKE STREET
ALEXANDRIA, VA 22314

COPY MAILED
AUG 14 2006
OFFICE OF PETITIONS

In re Application of	:	
Kornprobst	:	DECISION ON PETITION
Application No. 09/521,394	:	
Filed: March 8, 2000	:	
Dkt. No.: 450117-02431	:	

This is a decision on the petition under 37 CFR 1.137(b), filed February 23, 2006, to revive the above-identified application.

The petition is **GRANTED**.

This application became abandoned November 18, 2005 for failure to timely submit a proper reply to the final Office action mailed June 17, 2005. The final Office action set a three month shortened statutory period of time for reply. A two month extension of time in accordance with 37 CFR 1.136(a) was timely requested. This decision precedes Notice of Abandonment.

A grantable petition pursuant to 37 C.F.R. § 1.137(b) must be accompanied by: (1) the required reply to the outstanding Office action or notice, unless previously filed; (2) the petition fee as set forth in 37 C.F.R. § 1.17(m); (3) a statement that the entire delay in filing the required reply from the due date for the reply until the filing of a grantable petition pursuant to 37 C.F.R. § 1.137(b) was unintentional; and (4) any terminal disclaimer (and fee set forth in 37 C.F.R. § 1.20(d)) required pursuant to 37 C.F.R. § 1.137(c).

The instant petition has been reviewed and found in compliance with the provisions of 37 CFR 1.137(b). Accordingly, the failure to timely submit a proper reply to the Notice is accepted as having been unintentionally delayed.

This application is being forwarded to Technology Center 2600 for processing of the request for continued examination submitted herewith.

The required petition fee of $1500.00 has been charged to petitioners' deposit account.

Telephone inquiries concerning this matter may be directed to the undersigned at (571) 272-3205.

Alesia M. Brown
Petitions Attorney
Office of Petitions

UNITED STATES PATENT AND TRADEMARK OFFICE

Commissioner for Patents
United States Patent and Trademark Office
P.O. Box 1450
Alexandria, VA 22313-1450
www.uspto.gov

GLENN PATENT GROUP
3475 EDISON WAY, SUITE L
MENLO PARK, CA 94025

COPY MAILED

NOV 27 2007

OFFICE OF PETITIONS

In re Application of :
Andres Torrubia-Saez :
Application No. 09/521,709 : ON PETITION
Filed: March 9, 2000 :
Attorney Docket No. TRYM0001C

This is a decision on the petition, filed November 26, 2007 under 37 CFR 1.313(c)(2) to withdraw the above-identified application from issue after payment of the issue fee.

The petition is **GRANTED**.

The above-identified application is withdrawn from issue for consideration of a submission under 37 CFR 1.114 (request for continued examination). See 37 CFR 1.313(c)(2).

Petitioner is advised that the issue fee paid on July 19, 2007 in the above-identified application cannot be refunded. If, however, the above-identified application is again allowed, petitioner may request that it be applied towards the issue fee required by the new Notice of Allowance.[1]

Telephone inquiries should be directed to Irvin Dingle at (571) 272-3210.

This matter is being referred to Technology Center AU 2132 for processing of the request for continued examination under 37 CFR 1.114 and for consideration of the concurrently filed Information Disclosure Statement.

Irvin Dingle
Petitions Examiner
Office of Petitions

---

[1] The request to apply the issue fee to the new Notice may be satisfied by completing and returning the new Issue Fee Transmittal Form PTOL-85(b), which includes the following language thereon: Commissioner for Patents is requested to apply the Issue Fee and Publication Fee (if any) or re-apply any previously paid issue fee to the application identified above. Petitioner is advised that, whether a fee is indicated as being due or not, the Issue Fee Transmittal Form **must** be completed and timely submitted to avoid abandonment. Note the language in bold text on the first page of the Notice of Allowance and Fee(s) Due (PTOL-85).

UNITED STATES PATENT AND TRADEMARK OFFICE

Commissioner for Patents
United States Patent and Trademark Office
P. O. Box 1450
Alexandria, VA 22313-1450
www.uspto.gov

Paper No. 13

FOLEY AND LARDNER
SUITE 500
3000 K STREET NW
WASHINGTON, DC 20007

COPY MAILED

AUG 2 1 2003

OFFICE OF PETITIONS

In re Application of :
Cees A. Voort :
Application No. 09/521,884 : ON PETITION
Filed: March 9, 2000 :
Attorney Docket No. 082671-0118 :

This is a decision on the petition under 37 CFR 1.137(b), filed August 4, 2003, to revive the above-identified application.

The petition is **GRANTED**.

The above-identified application became abandoned for failure to reply in a timely manner to the non-final Office action mailed September 19, 2002, which set a shortened statutory period for reply of three (3) months. Three months extension of time under the provisions of 37 CFR 1.136(a) were obtained. Accordingly, the above-identified application became abandoned on March 20, 2003.

Telephone inquiries concerning this decision should be directed to Irvin Dingle at (703) 306-5684.

The application file is being forwarded to Technology Center 1600 for further processing.

Irvin Dingle
Petitions Examiner
Office of Petitions
Office of the Deputy Commissioner
for Patent Examination Policy

UNITED STATES PATENT AND TRADEMARK OFFICE

Commissioner for Patents
United States Patent and Trademark Office
P.O. Box 1450
Alexandria, VA 22313-1450
www.uspto.gov

Date Mailed :

Patent No. :6,913,322
Inventor : Kirk R,. Allen
Patent Issued :July 5, 2005
Title :LUG NUT RETENTION SYSTEM FOR A CHROMEPLATED WHEEL COVER

Re: Request for Certificate of Correction

Consideration has been given your request for the issuance of a certificate of correction for the above-identified patent under the provisions of 37 CFR 1.322 and 1.323.

Inspection of the application for the patent reveals that in connection with the alleged errors noted in applicants' request as located in columns 6, claim 1, line 65, claim 1 line 66; column 7, claim 1, lines 1, 6, 7, 8, 9, 11, 12, 13, 16; claim 2, line 23, 24; claim 3, line 25, 26; claim 4, line 27, 28; claim 5, line 30, 31; claim 6, line 34, 35, 36; claim 7, 37, 38; claim 8, line 44, 45, 48; claim 9, line 48, 49, 50, 60, 64, 65, 66; col. 8, claim 9, line 1, 2, 3, 4; claim 10, line 14, col. 8; claim 11, line 17, 20, 22; claim 13, line 62, col. 9. claim 13, line 7, 11, 12, 14; column 10, claim 14, line 9, 14, 15 and 16 each of which applicant has referred to and many of which were previously denied entry in examiners Advisory Action; have been considered in accordance with the records in the Patent and Trademark Office. There being no fault on the part of the Patent and Trademark Office, it has no authority to issue a certificate of correction under the provisions of 35 U.S.C. 254 and Rule 322 of the Rules of Practice of the United States Patent and Trademark Office in Patent Cases.

In view of the foregoing applicants request in this matter is hereby denied, however, a certificate of correction will issue to correct the remaining errors in addition to the following as requested by applicant:

Column 8, claim 10, line 14, kindly delete "claims" and inset -- claim --.
Column 9, claim 13, line 5 after "end of" kindly insert -- each one of --
Column 10,claim 14, line 5 after "end of" kindly insert -- each of one
Column 10, claim 14, line 6 kindly delete "and".

Further correspondence concerning this matter should be filed and directed to Decisions & Certificate of Correction Branch. Any telephone inquiry concerning this communication should be directed to Ms. A. Green at (703) 308-9380 ext. 123.

Cecelia Newman
Decisions & Certificates
of Correction Branch
(703) 308-9390 or (703) 308-

VanOphen & VanOphen, P.C.
51543 Van Dyke Ave.
Shelby Township, MI 48316-4447

CBN/arg

UNITED STATES DEPARTMENT OF COMMERCE
Patent and Trademark Office
ASSISTANT SECRETARY AND COMMISSIONER OF
PATENTS AND TRADEMARKS
Washington, D.C. 20231

Paper No. 3

COPY MAILED

MAR 24 2000

SPECIAL PROGRAMS OFFICE
DAC FOR PATENTS

JEFFREY D. MOY
HARRY M. WEISS & ASSOCIATES, P.C.
4204 NORTH BROWN AVENUE
SCOTTSDALE, AZ 85251-3914

In re Application of :
Scott Fink et al. :
Application No. 09/522,026 :
Filed: October 8, 1998 :
Attorney Docket No. 1958P1705DIV :

DECISION GRANTING PETITION

This is a decision on the petition filed May 17, 1999 requesting that the divisional Continued Prosecution Application (CPA) filed October 8, 1998 and based on prior application No. 08/644,916 (issued as Patent No. 5,847,450 on December 8, 1998) be treated as a divisional application under 37 CFR 1.53(b), rather than under 37 CFR 1.53(d), and be accorded a filing date of October 8, 1998.

On October 8, 1998, the application was submitted requesting treatment as a CPA under 37 CFR 1.53(d) based on prior application No. 08/644,916.

On May 17, the present petition and petition fee was submitted. The petition states that the use of the CPA transmittal form was incorrect and inadvertent and that petitioners intended to file the divisional application under the provisions of 37 CFR 1.53(b) rather than 37 CFR 1.53(b). Petitioners request that the application be treated as a divisional application under 37 CFR 1.53(b).

The application papers have been removed from the file of the prior application, placed in a new file wrapper and assigned Application No. 09/522,026. All future correspondences regarding this divisional application should be directed to that application number.

It is noted that the application papers filed on October 8, 1998 include a complete specification including an abstract and 10 claims and a copy of the declaration from the parent application, No. 08/644,916. However, since the specification contains matter not found in the prior application, the copy of the declaration submitted on filing, which executed the parent application, cannot execute this application. Accordingly, to perfect the filing of this divisional application, petitioners must submit an oath or declaration in compliance with 37 CFR 1.63, identifying the specification to which it is directed (preferably by reference to the above-identified application number and filing date). The surcharge for this late filing is $130.00 for a large entity. 37 CFR 1.16(e).

Petitioners are given **one month** from the date of this decision to file the oath or declaration and the surcharge required above in order to avoid abandonment of the application. This time period may be extended pursuant to 37 CFR 1.136(a). The response should be directed to the attention of the Office of Initial Patent Examination.

The petition is **granted**.

The application is being forwarded to the Office of Initial Patent Examination for further processing as a divisional application filed under 37 CFR 1.53(b), not under 37 CFR 1.53(d), with a filing date of October 8, 1998, using the application papers filed October 8, 1998 and the declaration filed in response to the decision.

Telephone inquiries concerning this matter should be directed to Petitions Attorney Karen Canaan at (703) 36-3313.

Fred A. Silverberg

Fred A. Silverberg
Senior Legal Advisor
Special Program Law Office
Office of the Deputy Assistant Commissioner
for Patent Policy and Projects

kc

UNITED STATES PATENT AND TRADEMARK OFFICE

Commissioner for Patents
United States Patent and Trademark Office
P.O. Box 1450
Alexandria, VA 22313-1450
www.uspto.gov

Paper 14

PATTERSON & SHERIDAN, L.L.P.
3040 POST OAK BOULEVARD, SUITE 1500
HOUSTON TX 77056

COPY MAILED

DEC 1 5 2005

OFFICE OF PETITIONS

ON PETITION

In re Application of :
Pierre M. Ham et al. :
Application No. 09/522,118 :
Filed: March 9, 2000 :
Attorney Docket No. WEAT/0382 :

This is a decision on the petition filed April 19, 2004 to withdraw the holding of abandonment under 37 CFR 1.181.

The petition under 37 CFR 1.181 is **GRANTED**.

This application became abandoned October 15, 2003 for failure to file a timely response to the Final Office Action mailed July 11, 2003. Accordingly, a Notice of Abandonment was mailed March 23, 2004.

Petitioner claims that the Office Action mailed July 11, 2003 was never received. Petitioners have provided a copy of the docket records fo this specific application, wherein receipt of the Final Office Action, mailed July 11, 2003, would have been filed, had it been received.

A review of the file reveals however that a power of attorney and address change was filed on March 31, 2003, that the revocation and new power of attorney were acknowledged but that the address information was not updated prior to the mailing of the Final Office Action on July 11, 2003. Thus, the Final Office Action was mailed to the wrong address and as petitioners claim, not received.

In view of the above, no petition fees are due and none have been charged.

The Notice of Abandonment is withdrawn and the file is being forwarded to Technology Center 1764 for the re-mailing of the Final Office Action originally mailed on July 11, 2003. Telephone inquiries concerning the re-mailing of the Office Action should be referred to the Technology Center. All other inquiries regarding this decision may be directed to the undersigned Petitions Attorney at (571) 272-3212.

Telephone inquiries concerning this matter may be directed to the undersigned Petitions Attorney at (571) 272-3212.

Patricia Faison-Ball

Patricia Faison-Ball
Senior Petitions Attorney
Office of Petitions

SPE L. DVORAK

SPE RESPONSE FOR CERTIFICATE OF CORRECTION

Paper No.: _____

DATE : 5/2/06

TO SPE OF : ART UNIT 3739

SUBJECT : Request for Certificate of Correction for Appl. No.: 09/522,275 Patent No.: 6413255

Please respond to this request for a certificate of correction within 7 days.

Please review the requested changes/corrections as shown in the **COCIN** document(s) in the IFW application image. No new matter should be introduced, nor should the scope or meaning of the claims be changed.

Please complete the response (see below) and forward the completed response to scanning using document code **COCX**.

Lamonte M. Newsome
Certificates of Correction Branch
703-308-9390 ext. 112

Thank You For Your Assistance

The request for issuing the above-identified correction(s) is hereby:
Note your decision on the appropriate box.

- ☑ **Approved** — **All** changes apply.
- ☐ **Approved in Part** — Specify below which changes **do not** apply.
- ☐ **Denied** — State the reasons for denial below.

Comments: Corrections directed to formal matters only which do not affect the scope of the claims.

SPE — 3739 Art Unit

UNITED STATES PATENT AND TRADEMARK OFFICE

Commissioner for Patents
United States Patent and Trademark Office
P.O. Box 1450
Alexandria, VA 22313-1450
www.uspto.go

FISH & RICHARDSON P.C.
3300 DAIN RAUSCHER PLAZA
MINNEAPOLIS, MN 55402

COPY MAILED

DEC 1 6 2004

OFFICE OF PETITIONS

In re Application of :
Lavian et al. :
Application No. 09/522,332 :
Filed: March 9, 2000 :
Attorney Docket No. 10360-052001 :

ON PETITION

This is a decision on the petition under 37 C.F.R. § 1.137(b), filed November 30, 2004, to revive the above-identified application.

The petition is **DISMISSED AS MOOT**.

In response to the final Office action mailed on May 19, 2004, a Notice of Appeal was submitted on August 19, 2004. Although the two-month period for reply expired on October 20, 2004, petitioner has the option of extending the period for an additional five (5) months to March 19, 2005. If by that date a proper response still has not been submitted, the above-identified application will officially be deemed abandoned.

Further, the amendment submitted with the instant petition was reviewed by the Examiner of record and did not prima facie place the application in condition for allowance.

The Revocation of Power of Attorney submitted with the instant petition is hereby not accepted. The document only has the signature of one of the two inventors listed for the above-identified application. Another copy of the document signed by Mr. Robert James Duncan is required before the Revocation of Power of Attorney can be accepted. While a courtesy copy of this decision is being mailed to the person signing the instant petition, all future correspondence will be directed to the address currently of record until such time as appropriate instructions are received to the contrary.

Any questions concerning this matter may be directed to the undersigned at (571) 272-3206.

Liana Chase
Petitions Examiner
Office of Petitions
Office of the Deputy Commissioner
for Patent Examination Policy

cc: HOLMES ANDERSON
STEUBING AND MCGUINESS & MANARAS LLP
125 NAGOG PARK
ACTON, MA 01720

RECEIVED
CENTRAL FAX CENTER
JAN 0 3 2005

Serial No.: 09/522332
Attorney Docket No: 120-467

CERTIFICATE OF FACSIMILE TRANSMISSION UNDER 37 C.F.R. 1.8

I hereby certify that this correspondence is being facsimile transmitted to the United States Patent and Trademark Office **at number (703) 872-9306**

January 3, 2005
date

Holmes W. Anderson
Signature

Holmes W. Anderson, Reg. No. 37,272
Typed or printed name of person signing Certificate

Note: Each paper must have its own certificate of transmission, or this certificate must identify each submitted paper.

RCE x 2 2 pages
Copy of Copy of Decision on Petition 1 page
Total including this sheet 4 pages

UNITED STATES PATENT AND TRADEMARK OFFICE

Commissioner for Patents
United States Patent and Trademark Office
P.O. Box 1450
Alexandria, VA 22313-1450
www.uspto.gov

120-467 HA

FISH & RICHARDSON P.C.
3300 DAIN RAUSCHER PLAZA
MINNEAPOLIS, MN 55402

COPY MAILED

DEC 16 2004

OFFICE OF PETITIONS

ON PETITION

In re Application of :
Lavian et al. :
Application No. 09/522,332 :
Filed: March 9, 2000 :
Attorney Docket No. 10360-052001 :

This is a decision on the petition under 37 C.F.R. § 1.137(b), filed November 30, 2004, to revive the above-identified application.

The petition is **DISMISSED AS MOOT.**

In response to the final Office action mailed on May 19, 2004, a Notice of Appeal was submitted on August 19, 2004. Although the two-month period for reply expired on October 20, 2004, petitioner has the option of extending the period for an additional five (5) months to March 19, 2005. If by that date a proper response still has not been submitted, the above-identified application will officially be deemed abandoned.

Further, the amendment submitted with the instant petition was reviewed by the Examiner of record and did not prima facie place the application in condition for allowance.

The Revocation of Power of Attorney submitted with the instant petition is hereby not accepted. The document only has the signature of one of the two inventors listed for the above-identified application. Another copy of the document signed by Mr. Robert James Duncan is required before the Revocation of Power of Attorney can be accepted. While a courtesy copy of this decision is being mailed to the person signing the instant petition, all future correspondence will be directed to the address currently of record until such time as appropriate instructions are received to the contrary.

Any questions concerning this matter may be directed to the undersigned at (571) 272-3206.

Liana Chase

Liana Chase
Petitions Examiner
Office of Petitions
Office of the Deputy Commissioner
for Patent Examination Policy

cc: HOLMES ANDERSON
STEUBING AND MCGUINESS & MANARAS LLP
125 NAGOG PARK
ACTON, MA 01720

UNITED STATES PATENT AND TRADEMARK OFFICE

UNITED STATES DEPARTMENT OF COMMERCE
United States Patent and Trademark Office
Address: COMMISSIONER FOR PATENTS
P.O. Box 1450
Alexandria, Virginia 22313-1450
www.uspto.gov

APPLICATION NO.	FILING DATE	FIRST NAMED INVENTOR	ATTORNEY DOCKET NO.	CONFIRMATION NO.
09/522,332	03/09/2000	Tal Lavian	120-467	3280

34845 7590 11/07/2007
McGUINNESS & MANARAS LLP
125 NAGOG PARK
ACTON, MA 01720

EXAMINER
BOUTAH, ALINA A

ART UNIT	PAPER NUMBER
2143	

MAIL DATE	DELIVERY MODE
11/07/2007	PAPER

Please find below and/or attached an Office communication concerning this application or proceeding.

The time period for reply, if any, is set in the attached communication.

UNITED STATES PATENT AND TRADEMARK OFFICE

Commissioner for Patents
United States Patent and Trademark Office
P.O. Box 1450
Alexandria, VA 22313-1450
www.uspto.gov

MAILED

NOV 06 2007

TECHNOLOGY CENTER 2100

Holmes W. Anderson
McGUINNESS & MANARAS LLP
125 NAGOG PARK
ACTON MA 01720

In re Application of:
TAL LAVIAN et al.
Application No. 09/522,332
Filed: March 9, 2000
For: METHOD AND APPARATUS FOR ACCESSING NETWORK INFORMATION ON A NETWORK DEVICE

DECISION ON PETITION UNDER 37 C.F.R. § 41.3

This is a decision on the petition, filed on 18 September 2007 under 37 C.F.R. § 41.3 requesting the withdrawal of the Notification of Non-Complaint Appeal Brief mailed 23 August 2007

The Petition is **GRANTED.**

RECENT PROSECUTION BACKGROUND

January 17, 2007	After Final Amendment filed. In the amendment, claims 1, 11, 22, 31 and 32 were amended.
April 10, 2007	Advisory Action mailed. Examiner indicated that the After Final Amendment would be entered for purposes of Appeal. The Examiner also indicated that a new search would be required because the claim amendments raised new issues that would require consideration and search.
June 05, 2007	Appeal Brief filed. The Appeal Brief listed the claims as shown in the After Final Amendment.
August 23, 2007	Notice of Non-compliant Brief mailed by the Examiner. The examiner pointed out in the Notice that the listing of claims was inaccurate because the AF Amendment filed January 17, 2007 had not been entered.
September 18, 2007	Petition filed along with a renewed Appeal Brief.

October 18, 2007	Notice of Non-compliance Brief mailed by the examiner. The examiner pointed out in the Notice that the Brief was unsigned.
October 24, 2007	Another renewed Appeal Brief filed, entered and forwarded to the examiner.

ANALYSIS

The question to be addressed is whether the Brief listing the claims as shown in the After Final Amendment is in compliance. MPEP 714.13 [R-5] (II.) states that amendments and other replies After Final rejection cannot be entered as a matter of right; however, an amendment filed at any time after Final rejection, but before an Appeal Brief is filed, may be entered upon or after filing of an appeal brief provided the total effect of the amendment is to (A) remove issues for appeal, and/or (B) adopt examiner suggestions.

A review of the file record shows that the examiner, in the Advisory Action dated April 4, 2007, stated that the After Final amendment filed January 17, 2007 which claims 1, 11, 22, 31and 32 were amended amendment would be entered for the purposes of appeal. In response, the Petitioner filed a Brief listing the claims as shown in the After Final amendment in ***accordance with the examiner's suggestion***. The examiner's holding of defected Appeal Brief for failure to comply with the provision of 37 CFR § 41.37(c)(1)(viii) is inaccurate.

DECISION

For the above stated reasons, the petition is **GRANTED**. The Notification of Non-complaint Appeal Brief mailed August 23, 2007 is hereby vacated.

The Appeal Brief filed on October 24, 2007, a duplicate of the Appeal Brief filed April 4, 2007, is at issue and has been forwarded to examiner for further action.

Any inquiry concerning this decision should be directed to the undersigned whose telephone number is (571) 272-4147.

Kim Huynh
Special Program Examiner
Technology 2100

UNITED STATES PATENT AND TRADEMARK OFFICE

COMMISSIONER FOR PATENTS
UNITED STATES PATENT AND TRADEMARK OFFICE
P.O. BOX 1450
ALEXANDRIA, VA 22313-1450
www.uspto.gov

Paper No. 22

JAN P. BRUNELLE
EXELIXIS, INC.
170 HARBOR WAY
P.O. BOX 511
SOUTH SAN FRANCISCO, CA 94083-0511

COPY MAILED

JAN 2 2 2004

OFFICE OF PETITIONS

In re Application of
Wagner et al.
Application No. 09/522,334
Filed: March 9, 2000
Attorney Docket No. 4257-0018.30

ON PETITION

This is a decision on the petition under 37 C.F.R. § 1.137(b), filed January 5, 2004, to revive the above-identified application.

The petition is **granted.**

This application became abandoned for failure to timely reply within three months to the non-final Office action mailed July 3, 2002. No extensions of time under the provisions of 37 CFR 1.136(a) were obtained. Accordingly, this application became abandoned on October 4, 2002. A Notice of Abandonment was mailed on March 10, 2003.

Petitioner has met the requirements to revive the above-identified application pursuant to 37 CFR 1.137(b).

The file is now being forwarded to Technology Center 1600 for further examination on the merits.

Telephone inquiries should be directed to Paralegal Liana Chase at (703) 306-0482.

Karen Creasy

Karen Creasy
Petitions Examiner
Office of Petitions
Office of the Deputy Commissioner
for Patent Examination Policy

UNITED STATES PATENT AND TRADEMARK OFFICE

Commissioner for Patents
United States Patent and Trademark Office
P.O. Box 1450
Alexandria, VA 22313-1450
www.uspto.gov

PATENT DEPT
EXELIXIS, INC.
170 HARBOR WAY
P.O. BOX 511
SOUTH SAN FRANCISCO CA 94083-0511

COPY MAILED

NOV 16 2005

OFFICE OF PETITIONS

In re Application of	:	
Wagner et al.	:	
Application No. 09/522,334	:	ON PETITION
Filed: March 9, 2000	:	
Attorney Docket No. 4257.0018.30	:	

This is a decision on the petition under 37 C.F.R. § 1.137(b), filed October 24, 2005, to revive the above-identified application.

The petition is **GRANTED.**

The petition satisfies the conditions for revival pursuant to the provisions of 37 CFR 1.137(b) in that (1) the reply in the form of an amendment; (2) the petition fee; and (3) the required statement of unintentional delay have been received. Accordingly, the response has been accepted as having been unintentionally delayed.

This matter is being referred to Technology Center 1600 for further examination on the merits.

Telephone inquiries regarding this decision should be directed to the undersigned at (571) 272-3282.

Liana Chase
Petitions Examiner
Office of Petitions

UNITED STATES
PATENT AND
TRADEMARK OFFICE

Under Secretary of Commerce for Intellectual Property and
Director of the United States Patent and Trademark Office
Washington, DC 20231
www.USPTO.gov

Mailed: SEP 19 2002

spg
Paper Number 12

In re application of
Paul D. Goyette et al.
Serial No. 09/522,413
Filed: March 9, 2000
For: ARTICLE SUPPORT

DECISION ON
PETITION

This is a response to the REQUEST FOR WITHDRAWAL OF HOLDING OF ABANDONMENT, filed August 1, 2002. The request asks that the holding of abandonment, as set forth in the Notice of Abandonment mailed July 5, 2002, for failure to timely file a proper reply to the Office letter mailed on December 28, 2001 be withdrawn since the applicant did not receive the Office letter.

DECISION

Since the requestor asserts that the applicant did not receive the Office letter mailed December 28, 2001, the request is accepted as a petition under 37 C.F.R. § 1.181 (no fee) and is evaluated under the procedures regarding an acceptable showing of non-receipt of an office action, TMOG 1156 O.G. 53, November 16, 1993, (see also MPEP 711.02 - NEW PROCEDURE TMOG 1170 O.G. 114).

A review of the petitioner's evidence indicates that the request cannot be granted. As set forth in MPEP § 711.03(c) II - PETITION TO WITHDRAW HOLDING OF ABANDONMENT BASED ON FAILURE TO RECEIVE OFFICE ACTION:

> "The showing required to establish the nonreceipt of an Office communication **must** include a statement from the practitioner stating that the Office communication was not received by the practitioner and **attesting to the fact that a search of the file jacket and docket records indicates that the Office communication was not received**. A copy of the docket record where the nonreceived Office communication would have been entered had it been received and docketed must be attached to and referenced in the practitioner's statement." (emphasis added)

The evidence presented is insufficient to establish that the Office letter mailed December 28, 2001 was not received at the attorney's correspondence address. The evidence provided includes a statement by the petitioner that the Office letter mailed December 28, 2001 was not received by the office of the petitioner, also included is a copy of the attorney docket records, but the instant petition does not contain a statement attesting that a search of the file jacket was made, and the results of such a search revealed that the office communication was not received and it fails to contain a statement that a search of the docket records was made and the results of such a search revealed that the Office letter mailed December 28, 2001 was not received.

The petition is **DENIED**.

Richard V. Fisher

Richard V. Fisher, Director
Technology Center 1700
Chemical and Materials Engineering

MORRISON & FOERSTER LLP
2000 PENNSYLVANIA AVENUE, N.W.
WASHINGTON DC 20006-1888

UNITED STATES
PATENT AND
TRADEMARK OFFICE

Under Secretary of Commerce for Intellectual Property and
Director of the United States Patent and Trademark Office
Washington, DC 20231
www.USPTO.gov

Mailed: JAN - 6 2003

spg
Paper Number 14

In re application of
Paul Goyette et al.
Serial No. 09/522,413
Filed: March 9, 2000
For: ARTICLE SUPPORT

DECISION ON
PETITION

This is a decision on the REQUEST FOR RECONSIDERATION OF DECISION ON PETITION TO WITHDRAW HOLDING OF ABANDONMENT, filed October 4, 2002, which has been taken along with the REQUEST FOR WITHDRAWAL OF HOLDING OF ABANDONMENT filed August 1, 2002. The requests ask that the holding of abandonment, as set forth in the Notice of Abandonment mailed July 5, 2002, for failure to timely file a proper response to the Office letter mailed on December 28, 2001 be withdrawn since the applicant did not receive the Office letter mailed December 28, 2001.

DECISION

The instant request has been accepted as a timely petition under 37 C.F.R. 1.181 (no fee), and is evaluated under the procedures regarding an acceptable showing of non-receipt of an office action, TMOG 1156 O.G. 53, November 16, 1993, (see also MPEP 711.03(c) - NEW PROCEDURE TMOG 1170 O.G. 114). A review of the petitioner's evidence indicates that the request has merit. The evidence presented is sufficient to establish that the applicants or applicant's representative did not receive the Office letter, mailed December 28, 2001. The evidence provided includes a statement by the petitioner that the Office letter, mailed December 28, 2001 was not received, a statement that a search of the file and docket records was made, and a statement that the search revealed the Office letter was not received. Also provided is a copy of the attorney's application docket records where the Office letter would have been posted had it been timely received.

Therefore, the abandonment is hereby withdrawn, and the application is returned to pending status. The application shall be forwarded to the examiner for prompt remailing of the Office letter originally mailed December 28, 2001 and restarting of the statutory period of response from the remail date thereof.

The Petition is **GRANTED**.

Jacqueline Stone, Director
Technology Center 1700
Chemical and Materials Engineering

MORRISON & FOERSTER LLP
1650 TYSONS BOULEVARD
SUITE 300
MCLEAN VA 22102

UNITED STATES PATENT AND TRADEMARK OFFICE

Commissioner for Patents
United States Patent and Trademark Office
P.O. Box 1450
Alexandria, VA 22313-1450
www.uspto.gov

JJGJr: 11-06

Paper No: ___

FISH & RICHARDSON PC
P.O. BOX 1022
MINNEAPOLIS MN 55440-1022

COPY MAILED

NOV 20 2006

OFFICE OF PETITIONS

In re Application of:	:	
Ko, et al.	:	
Patent No.: 6,962,719	:	
Issue Date: 8 November, 2005	:	
Application No. 09/522,434	:	ON PETITION
Filed: 9 March, 2000	:	
Attorney Docket No.: 11544-003001	:	

This is a decision on the request filed on 23 January, 2006, which is being treated as a request under 37 CFR 3.81(b)[1] to correct the name of the assignee on the front page of the above-identified patent by way of a Certificate of Correction.

The Office regrets the delay in addressing this matter, however, the instant petition was provided to the attorneys in the Office of Petitions only on this writing.

The request is **GRANTED** (upon the instant showing of the recordation of the assignment on 30 September, 2005, at Reel/Frame 016848/0047.

The Certificates of Correction Branch will be notified of this decision granting the petition under 37 CFR 3.81(b) and directing issuance of the requested Certificate of Correction.

---

[1] *See* MPEP 1309, subsection II; and Official Gazette of 22 June, 2004.

Inquiries regarding the issuance of a certificate of correction should be directed to the Certificate of Correction Branch at (571) 272-4200.

While telephone inquiries regarding this decision may be directed to the undersigned at (571) 272-3214, it is noted that all practice before the Office is in writing (see: 37 C.F.R. §1.2[2]) and the proper authority for action on any matter in this regard are the statutes (35 U.S.C.), regulations (37 C.F.R.) and the commentary on policy (MPEP). Therefore, no telephone discussion may be controlling or considered authority for Petitioner's action(s).

John J. Gillon, Jr.
Senior Attorney
Office of Petitions

[2] The regulations at 37 C.F.R. §1.2 provide:
§1.2 Business to be transacted in writing.
All business with the Patent and Trademark Office should be transacted in writing. The personal attendance of applicants or their attorneys or agents at the Patent and Trademark Office is unnecessary. The action of the Patent and Trademark Office will be based exclusively on the written record in the Office. No attention will be paid to any alleged oral promise, stipulation, or understanding in relation to which there is disagreement or doubt.

UNITED STATES PATENT AND TRADEMARK OFFICE

Commissioner for Patents
United States Patent and Trademark Office
P.O. Box 1450
Alexandria, VA 22313-1450
www.uspto.gov

SCHWEGMAN, LUNDBERG, WOESSNER & KLUTH, PA
P.O. BOX 2938
MINNEAPOLIS, MN 55402

MAILED

JUL 19 2006

TECHNOLOGY CENTER 2100

In re Application of: KRAMER, et al.
Application No. 09/522483
Filed: March 10, 2000
For: TRAINABLE, EXTENSIBLE, AUTOMATED DATA-TO-KNOWLEDGE TRANSLATOR

DECISION ON REQUEST TO WITHDRAW AS ATTORNEY OR AGENT

This is a decision on the Request To Withdraw from Representation filed March 24, 2006.

A grantable request to withdraw as attorney of record should indicate thereon the present mailing addresses of the attorney(s) who is/are withdrawing from the record and of the applicant. The request for withdrawal must be signed by every attorney seeking to withdraw or contain a clear indication that one attorney is signing on behalf of another/others. A request to withdraw will not be approved unless at least 30 (thirty) days would remain between the date of approval and the later of the expiration date of a time to file a response or the expiration date of the maximum time period which can be extended under 37 C.F.R. § 1.136(a). The effective date of withdrawal is the date of decision and not the date of request. See M.P.E.P. § 402.06. 37 C.F.R. § 10.40(a) further requires that the applicant or patent owner be notified of the withdrawal of the attorney or agent.

The request is **GRANTED**.

All future communications from the U.S. Patent and Trademark Office (Office) will be directed to the below-listed address until otherwise notified by applicant. This correspondence address is provided by the withdrawn attorney(s). Applicant is reminded of the obligation to promptly notify the Office of any change in correspondence address to ensure receipt of all communications from the Office.

Kate Hall for

Vincent N. Trans
Special Program Examiner
Technology Center 2100
Computer Architecture, Software, and
Information Security
571-272-3613

cc: HONEYWELL INTERNATIONAL, INC.
MS MN17-3900
2600 RIDGWAY PARKWAY
MINNEAPOLIS, MN 55413

PTO/SB/66 (03-09)
Approved for use through 03/31/2012. OMB 0651-0016
U.S. Patent and Trademark Office: U.S. DEPARTMENT OF COMMERCE
Under the Paperwork Reduction Act of 1995, no persons are required to respond to a collection of information unless it displays valid OMB control number.

PETITION TO ACCEPT UNINTENTIONALLY DELAYED PAYMENT OF MAINTENANCE FEE IN AN EXPIRED PATENT (37 CFR 1.378(c))

Patent Number	Issue Date (YYYY-MM-DD)	Application Number	Filing Date (YYYY-MM-DD)	Docket Number (if applicable)
6,895,583	2005-05-17	09/522,541	2000-03-10	40101/10701

CAUTION: Maintenance fee (and surcharge, if any) payment must correctly identify: (1) the patent number and (2) the application number of the actual U.S. application leading to issuance of that patent to ensure the fee(s) is/are associated with the correct patent. 37 CFR 1.366(c) and (d).

SMALL ENTITY
☐ Patentee claims, or has previously claimed, small entity status. See 37 CFR 1.27.

LOSS OF ENTITLEMENT TO SMALL ENTITY STATUS
☐ Patentee is no longer entitled to small entity status. See 37 CFR 1.27(g)

NOT Small Entity		Small Entity	
Fee	Code	Fee	Code
◉ 3 ½ year	(1551)	○ 3 ½ year	(2551)
○ 7 ½ year	(1552)	○ 7 ½ year	(2552)
○ 11 ½ year	(1553)	○ 11 ½ year	(2553)

SURCHARGE
The surcharge required by 37 CFR 1.20(i)(2) (Fee Code 1558) must be paid as a condition of accepting unintentionally delayed payment of the maintenance fee.

MAINTENANCE FEE (37 CFR 1.20(e)-(g))
The appropriate maintenance fee must be submitted with this petition.

STATEMENT
THE UNDERSIGNED CERTIFIES THAT THE DELAY IN PAYMENT OF THE MAINTENANCE FEE TO THIS PATENT WAS UNINTENTIONAL

PETITIONER(S) REQUEST THAT THE DELAYED PAYMENT OF THE MAINTENANCE FEE BE ACCEPTED AND THE PATENT REINSTATED

THIS PORTION MUST BE COMPLETED BY THE SIGNATORY OR SIGNATORIES

37 CFR 1.378(d) states: "Any petition under this section must be signed by an attorney or agent registered to practice before the Patent and Trademark Office, or by the patentee, the assignee, or other party in interest."

I certify, in accordance with 37 CFR 1.4(d)(4) that I am

◉ An attorney or agent registered to practice before the Patent and Trademark Office

○ A sole patentee

○ A joint patentee; I certify that I am authorized to sign this submission on behalf of all the other patentees.

○ A joint patentee; all of whom are signing this e-petition

○ The assignee of record of the entire interest

Patent Practitioner			
A signature of the applicant or representative is required in accordance with 37 CFR 1.33 and 10.18. Please see 37 CFR 1.4(d) for the form of the signature			
Signature	/Michael J. Marcin/	Date (YYYY-MM-DD)	2009-05-29
Name	Michael J. Marcin	Registration Number	48198

This collection of information is required by 37 CFR 1.378(c). The information is required to obtain or retain a benefit by the public which is to file (and by the USPTO to process) an application. Confidentiality is governed by 35 U.S.C. 122 and 37 CFR 1.11 and 1.14. This collection is estimated to take 1 hour to complete, including gathering, preparing, and submitting the completed application form to the USPTO. Time will vary depending upon the individual case. Any comments on the amount of time you require to complete this form and/ or suggestions for reducing this burden, should be sent to the Chief Information Officer, U.S. Patent and Trademark Office, U.S. Department of Commerce, P.O. Box 1450, Alexandria, VA 22313-1450. DO NOT SEND FEES OR COMPLETED FORMS TO THIS ADDRESS. **This form can only be used when in conjunction with EFS-Web. If this form is mailed to the USPTO, it may cause delays in reinstating the patent.**

Privacy Act Statement

The Privacy Act of 1974 (P.L. 93-579) requires that you be given certain information in connection with your submission of the attached form related to a patent application or patent. Accordingly, pursuant to the requirements of the Act, please be advised that: (1) the general authority for the collection of this information is 35 U.S.C. 2(b)(2); (2) furnishing of the information solicited is voluntary; and (3) the principal purpose for which the information is used by the U.S. Patent and Trademark Office is to process and/or examine your submission related to a patent application or patent. If you do not furnish the requested information, the U.S. Patent and Trademark Office may not be able to process and/or examine your submission, which may result in termination of proceedings or abandonment of the application or expiration of the patent.

The information provided by you in this form will be subject to the following routine uses:

1. The information on this form will be treated confidentially to the extent allowed under the Freedom of Information Act (5 U.S.C. 552) and the Privacy Act (5 U.S.C. 552a). Records from this system of records may be disclosed to the Department of Justice to determine whether the Freedom of Information Act requires disclosure of these records.

2. A record from this system of records may be disclosed, as a routine use, in the course of presenting evidence to a court, magistrate, or administrative tribunal, including disclosures to opposing counsel in the course of settlement negotiations.

3. A record in this system of records may be disclosed, as a routine use, to a Member of Congress submitting a request involving an individual, to whom the record pertains, when the individual has requested assistance from the Member with respect to the subject matter of the record.

4. A record in this system of records may be disclosed, as a routine use, to a contractor of the Agency having need for the information in order to perform a contract. Recipients of information shall be required to comply with the requirements of the Privacy Act of 1974, as amended, pursuant to 5 U.S.C. 552a(m).

5. A record related to an International Application filed under the Patent Cooperation Treaty in this system of records may be disclosed, as a routine use, to the International Bureau of the World Intellectual Property Organization, pursuant to the Patent Cooperation Treaty.

6. A record in this system of records may be disclosed, as a routine use, to another federal agency for purposes of National Security review (35 U.S.C. 181) and for review pursuant to the Atomic Energy Act (42 U.S.C. 218(c)).

7. A record from this system of records may be disclosed, as a routine use, to the Administrator, General Services, or his/her designee, during an inspection of records conducted by GSA as part of that agency's responsibility to recommend improvements in records management practices and programs, under authority of 44 U.S.C. 2904 and 2906. Such disclosure shall be made in accordance with the GSA regulations governing inspection of records for this purpose, and any other relevant (i.e., GSA or Commerce) directive. Such disclosure shall not be used to make determinations about individuals.

8. A record from this system of records may be disclosed, as a routine use, to the public after either publication of the application pursuant to 35 U.S.C. 122(b) or issuance of a patent pursuant to 35 U.S.C. 151. Further, a record may be disclosed, subject to the limitations of 37 CFR 1.14, as a routine use, to the public if the record was filed in an application which became abandoned or in which the proceedings were terminated and which application is referenced by either a published application, an application open to public inspections or an issued patent.

9. A record from this system of records may be disclosed, as a routine use, to a Federal, State, or local law enforcement agency, if the USPTO becomes aware of a violation or potential violation of law or regulation.

UNITED STATES PATENT AND TRADEMARK OFFICE

Commissioner for Patents
United States Patent and Trademark Office
P.O. Box 1450
Alexandria, VA 22313-1450
www.uspto.gov

In re Patent No. 6895583
Issue Date: May 17,2005
Application No. 09522541
Filed: March 10,2000
Attorney Docket No. 40101/10701

:
:DECISION GRANTING PETITION
:UNDER 37 CFR 1.378(c)
:

This is a decision on the electronic petition, filed May 29,2009 ,under 37 CFR 1.378(c) to accept the unintentionally delayed payment of the 3.5 year maintenance fee for the above-identified patent.

The petition is **GRANTED**.

The maintenance fee is accepted, and the above-identified patent reinstated as of May 29,2009 .
This decision also constitutes notice that the fee has been accepted. An electronic copy of the petition and this decision has been created as an entry in the Image File Wrapper. Nevertheless, petitioner should print and retain an independent copy.

Telephone inquiries related to this electronic decision should be directed to the Electronic Business Center at 1-866-217-9197.

UNITED STATES PATENT AND TRADEMARK OFFICE

Commissioner for Patents
United States Patent and Trademark Office
P.O. Box 1450
Alexandria, VA 22313-1450
www.uspto.gov

RECEIVED
OCT 28 2004
TECHNOLOGY CENTER 2800

112004

JOHN S. BEULICK
C/O ARMSTRONG TEASDALE LLP
One Metropolitan Square
Suite 2600
St. Louis, MO 63102-2740

In re Application of:
Kenneth F. Cook *et al.*
Serial No.: 09/522,563
Filed: March 10, 2000
Attorney Docket No.: 13DV-13190

DECISION ON PETITION TO WITHDRAW HOLDING OF ABANDONMENT

This is a decision on the petition filed March 3, 2003, to withdraw the holding of abandonment in the above-identified application under 37 CFR § 1.181, or in the alternative, to revive the application under 37 CFR 1.137(b). The petition to withdraw the holding of abandonment is being treated as a petition to accept the response filed therewith as being timely filed.

The petition to accept the response as being timely filed is **GRANTED.**

A non-final Office action was mailed on July 30, 2002, setting a shortened statutory period of three-months for filing a reply. A Notice of Abandonment has not been mailed.

Petitioner asserts that the Office action of July 30, 2002, was not received and only learned about the mailing of the Office action upon receiving a status check from the examiner. To support this assertion, petitioner provided a statement attesting that a search of the file jacket and docket records showed that the Office action was not received and a copy of the file docket where the Office action would have been entered had it been received. The petition is accompanied by a response to the Office action of July 30, 2002.

A review of the written record indicates no irregularity in the mailing of the Notice, and in the absence of any irregularity there is a strong presumption that the Notice was properly mailed to practitioner at the address of record. This presumption may be overcome by a showing that the Notice was not in fact received. The showing required to establish the failure to receive an Office action must include a statement from the practitioner stating that the practitioner did not receive the Office action and attesting to the fact that a search of the file jacket and docket records indicates that the Office action was not received. A copy of the docket record where the non-received Office action would have been entered had it been received and docketed must be attached to and referenced in practitioner's statement. See "Withdrawing the Holding of

Abandonment When Office Actions Are Not Received" 1156 Official Gazette 53 (November 16, 1993) and M.P.E.P. § 711.03(c).

The petition is sufficient to establish a showing of non-receipt of the Office action mailed July 30, 2002. However, a copy of the Office action has been facsimiled transmitted by the examiner and a response thereto has been filed with the instant petition.

For the above stated reason, the petition is granted. The response filed March 10, 2000, is hereby accepted as being timely filed.

The response will be entered and an Office action will be issued in due course.

Inquiries regarding this decision should be directed to Hien H. Phan at (571) 272-1606.

Sharon A. Gibson, Director
Technology Center 2800
Semiconductors, Electrical and Optical
Systems and Components

UNITED STATES PATENT AND TRADEMARK OFFICE

UNITED STATES DEPARTMENT OF COMMERCE
United States Patent and Trademark Office
Address: COMMISSIONER FOR PATENTS
P.O. Box 1450
Alexandria, Virginia 22313-1450
www.uspto.gov

APPLICATION NO.	FILING DATE	FIRST NAMED INVENTOR	ATTORNEY DOCKET NO.	CONFIRMATION NO.
09/522,563	03/10/2000	Kenneth F. Cook	13DV13190	5583

29399 7590 08/09/2006

JOHN S. BEULICK (12729)
C/O ARMSTRONG TEASDALE LLP
ONE METROPOLITAN SQUARE
SUITE 2600
ST. LOUIS, MO 63102-2740

EXAMINER
PATEL, PARESH H

ART UNIT	PAPER NUMBER
2829	

DATE MAILED: 08/09/2006

Please find below and/or attached an Office communication concerning this application or proceeding.

UNITED STATES PATENT AND TRADEMARK OFFICE

Commissioner for Patents
United States Patent and Trademark Office
P.O. Box 1450
Alexandria, VA 22313-1450
www.uspto.gov

112004

JOHN S. BEULICK
C/O ARMSTRONG TEASDALE LLP
One Metropolitan Square
Suite 2600
St. Louis, MO 63102-2740

AUG - 9 2006

In re Application of:
Kenneth F. Cook *et al.*
Serial No.: 09/522,563
Filed: March 10, 2000
Attorney Docket No.: 13DV-13190

DECISION ON PETITION TO WITHDRAW HOLDING OF ABANDONMENT

This is a decision on the petition filed March 3, 2003, to withdraw the holding of abandonment in the above-identified application under 37 CFR § 1.181, or in the alternative, to revive the application under 37 CFR 1.137(b). The petition to withdraw the holding of abandonment is being treated as a petition to accept the response filed therewith as being timely filed.

The petition to accept the response as being timely filed is **GRANTED.**

A non-final Office action was mailed on July 30, 2002, setting a shortened statutory period of three-months for filing a reply. A Notice of Abandonment has not been mailed.

Petitioner asserts that the Office action of July 30, 2002, was not received and only learned about the mailing of the Office action upon receiving a status check from the examiner. To support this assertion, petitioner provided a statement attesting that a search of the file jacket and docket records showed that the Office action was not received and a copy of the file docket where the Office action would have been entered had it been received. The petition is accompanied by a response to the Office action of July 30, 2002.

A review of the written record indicates no irregularity in the mailing of the Notice, and in the absence of any irregularity there is a strong presumption that the Notice was properly mailed to practitioner at the address of record. This presumption may be overcome by a showing that the Notice was not in fact received. The showing required to establish the failure to receive an Office action must include a statement from the practitioner stating that the practitioner did not receive the Office action and attesting to the fact that a search of the file jacket and docket records indicates that the Office action was not received. A copy of the docket record where the non-received Office action would have been entered had it been received and docketed must be attached to and referenced in practitioner's statement. See "Withdrawing the Holding of

Abandonment When Office Actions Are Not Received" 1156 Official Gazette 53 (November 16, 1993) and M.P.E.P. § 711.03(c).

The petition is sufficient to establish a showing of non-receipt of the Office action mailed July 30, 2002. However, a copy of the Office action has been facsimiled transmitted by the examiner and a response thereto has been filed with the instant petition.

For the above stated reason, the petition is granted. The response filed March 10, 2000, is hereby accepted as being timely filed.

The response will be entered and an Office action will be issued in due course.

Inquiries regarding this decision should be directed to Hien H. Phan at (571) 272-1606.

Sharon A. Gibson, Director
Technology Center 2800
Semiconductors, Electrical and Optical
Systems and Components

UNITED STATES PATENT AND TRADEMARK OFFICE

Commissioner for Patents
United States Patent and Trademark Office
P.O. Box 1450
Alexandria, VA 22313-1450
www.uspto.gov

082006

JOHN S. BEULICK
C/O ARMSTRONG TEASDALE LLP
One Metropolitan Square
Suite 2600
St. Louis, MO 63102-2740

AUG - 9 2006

In re Application of:	:	
Kenneth F. Cook *et al.*	:	LETTER TO CLARIFY THE APPLICATION RECORD
Serial No.: 09/522,563	:	
Filed: March 10, 2000	:	
Attorney Docket No.: 13DV-13190	:	

This communication is to clarify the record regarding the petition to withdraw the holding of abandonment of the application and the decision withdrawing such holding of abandonment.

A decision withdrawing the holding of abandonment was prepared in response to a petition filed March 3, 2003. The application IFW record indicates that the decision granting the request to withdraw the holding of abandonment was issued on October 28, 2004. However, the decision was not signed and did not have a mail date stamped thereon. A properly signed decision is attached.

It is hereby confirmed that the holding of abandonment has been withdrawn and the Notice of Abandonment has been vacated. The papers submitted after the mailing of abandonment are accepted as being timely and proper.

An Office action will be promptly issued following this letter.

Inquiries regarding this decision should be directed to Hien H. Phan at (571) 272-1606.

Sharon A. Gibson, Director
Technology Center 2800
Semiconductors, Electrical and Optical
Systems and Components

Enclosure: Decision on Petition to Withdraw Holding of Abandonment

UNITED STATES PATENT AND TRADEMARK OFFICE

COMMISSIONER FOR PATENTS
UNITED STATES PATENT AND TRADEMARK OFFICE
P.O. BOX 1450
ALEXANDRIA, VA 22313-1450
www.uspto.gov

APR 14 2004

#22

THOMAS HOXIE
NOVATIS CORPORATION
PATENT AND TRADEMARK DEPT
564 MORRIS AVENUE
SUMMIT NJ 07901-1027

In re Application of	:
Robert Mitchell Crowl et al et al	:
Serial No.: 09/522,699	: PETITION DECISION
Filed: March 10, 2000	:
Attorney Docket No.: 41336P1	:

This is in response to the petition under 37 CFR 1.181, filed March 1, 2004, for withdrawal of abandonment of the above identified application based on failure to receive an Office action.

A review of the file history shows that the examiner mailed a Notice of Allowance and Issue Fee Due and a Notice of Allowability to applicants on September 4, 2003, setting a three month statutory period for payment of the Issue Fee and filing of corrected drawings. Upon failure to receive the Issue Fee, the Office mailed a Notice of Abandonment to applicants on January 12, 2004. Applicants state that the Notices were not received and provide statements and copies of docket records establishing that the Notices were not received. In view of the evidence presented the Notice of Abandonment is withdrawn and the application is restored to pending status with the mailing of this decision.

The petition is **GRANTED**.

It is noted that applicants have obtained a copy of the Issue Fee Transmittal Form and have paid the Issue Fee. However the Notice of Allowability also required submission of new drawings. In view thereof both Notices are being remailed to applicants.

There is also no fee for this petition and the petition fee paid of $130.00 will be credited to applicants' Deposit Account No. 19-0134, as directed.

Should there be any questions about this decision please contact William R. Dixon, Jr., by letter addressed to Director, TC 1600, at the address listed above, or by telephone at 703-308-3824 or by facsimile sent to the general Office facsimile number.

Jasemine C. Chambers
Director, Technology Center 1600

UNITED STATES PATENT AND TRADEMARK OFFICE

Commissioner for Patents
United States Patent and Trademark Office
P.O. Box 1450
Alexandria, VA 22313-1450
www.uspto.gov

NOVARTIS
CORPORATE INTELLECTUAL PROPERTY
ONE HEALTH PLAZA 104/3
EAST HANOVER, NJ 07936-1080

COPY MAILED

JAN 23 2006

OFFICE OF PETITIONS

In re Application of :
Robert Mitchell Crowl, et al. :
Application No. 09/522,699 :
Filed: March 10, 2000 :
Attorney Docket No. 4-31336P1 :

ON PETITION

This is a decision on the petition under 37 CFR 1.137(b), filed November 14, 2005, to revive the above-identified application.

The petition is **DISMISSED**.

Any request for reconsideration of this decision must be submitted within TWO (2) MONTHS from the mail date of this decision. Extensions of time under 37 CFR 1.136(a) are permitted. The reconsideration request should include a cover letter entitled "Renewed Petition under 37 CFR 1.137(b)." This is **not** a final agency action within the meaning of 5 U.S.C. § 704.

A grantable petition under 37 CFR 1.137(b) must be accompanied by: (1) the required reply, unless previously filed; (2) the petition fee as set forth in 37 CFR 1.17(m); (3) a statement that the entire delay in filing the required reply from the due date for the reply until the filing of a grantable petition pursuant to 37 CFR 1.137(b) was unintentional; and (4) any terminal disclaimer (and fee as set forth in 37 CFR 1.20(d)) required by 37 CFR 1.137(d). Where there is a question as to whether either the abandonment or the delay in filing a petition under 37 CFR 1.137 was unintentional, the Commissioner may require additional information. See MPEP 711.03(c)(III)(C) and (D). The instant petition lacks item(s) 2.

Petitioner is advised that as of December 8, 2004, the Petition fee for revival of an application for patent abandoned unintentionally under 37 CFR 1.137(b) is $1500 for a large entity. A petition fee is due upon the filing of the "renewed petition".

Further correspondence with respect to this matter should be addressed as follows:

By mail: Mail Stop PETITIONS
Commissioner for Patents
Post Office Box 1450
Alexandria, VA 22313-1450

By hand: Customer Service Window
Mail Stop Petitions
Randolph Building
401 Dulany Street
Alexandria, VA 22314

By fax: (571) 273-8300
ATTN: Office of Petitions

Telephone inquiries concerning this decision should be directed to the undersigned at (571) 272-3229.

Retta Williams

Retta Williams
Petitions Examiner
Office of Petitions

UNITED STATES PATENT AND TRADEMARK OFFICE

Commissioner for Patents
United States Patent and Trademark Office
P.O. Box 1450
Alexandria, VA 22313-1450
www.uspto.gov

NOVARTIS
CORPORATE INTELLECTUAL PROPERTY
ONE HEALTH PLAZA 104/3
EAST HANOVER NJ 07936-1080

COPY MAILED
MAY 0 5 2006
OFFICE OF PETITIONS

In re Application of	:	
Robert Mitchell CROWL et al.	:	
Application No. 09/522,699	:	ON PETITION
Filed: March 10, 2000	:	
Attorney Docket No. 4-31336P1	:	

This is a decision on the renewed petition, filed February 28, 2006, under 37 CFR 1.137(b) to revive the above-identified application.

The petition is **GRANTED**.

The above-identified application became abandoned for failure to submit corrected drawings in a timely manner in reply to the Notice of Allowability mailed September 4, 2003, which set a statutory period for reply of three (3) months. Accordingly, by operation of law, the above-identified application became abandoned on December 5, 2003.

The petition satisfies the conditions for revival pursuant to the provisions of 37 CFR 1.137(b) in that (1) the reply in the form corrected drawings; (2) the petition fee of $1500; and (3) the required statement of unintentional delay have been received. Accordingly, the corrected drawing is accepted as having been unintentionally delayed.

Telephone inquiries concerning this decision should be directed to David A. Bucci at (571) 272-7099 or in his absence, the undersigned.

The application file is being referred to the Office of Patent Publication.

David Bucci
Petitions Examiner
Office of Petitions

PTO/SB/66 (03-09)
Approved for use through 03/31/2012. OMB 0651-0016
U.S. Patent and Trademark Office: U.S. DEPARTMENT OF COMMERCE
Under the Paperwork Reduction Act of 1995, no persons are required to respond to a collection of information unless it displays valid OMB control number.

PETITION TO ACCEPT UNINTENTIONALLY DELAYED PAYMENT OF MAINTENANCE FEE IN AN EXPIRED PATENT (37 CFR 1.378(c))

Patent Number	Issue Date (YYYY-MM-DD)	Application Number	Filing Date (YYYY-MM-DD)	Docket Number (if applicable)
6294995	2001-09-25	09522812	2000-03-10	P456.12-0001

CAUTION: Maintenance fee (and surcharge, if any) payment must correctly identify: (1) the patent number and (2) the application number of the actual U.S. application leading to issuance of that patent to ensure the fee(s) is/are associated with the correct patent. 37 CFR 1.366(c) and (d).

SMALL ENTITY
☒ Patentee claims, or has previously claimed, small entity status. See 37 CFR 1.27.

LOSS OF ENTITLEMENT TO SMALL ENTITY STATUS
☐ Patentee is no longer entitled to small entity status. See 37 CFR 1.27(g)

NOT Small Entity		Small Entity	
Fee	Code	Fee	Code
○ 3 ½ year	(1551)	○ 3 ½ year	(2551)
○ 7 ½ year	(1552)	◉ 7 ½ year	(2552)
○ 11 ½ year	(1553)	○ 11 ½ year	(2553)

SURCHARGE
The surcharge required by 37 CFR 1.20(i)(2) (Fee Code 1558) must be paid as a condition of accepting unintentionally delayed payment of the maintenance fee.

MAINTENANCE FEE (37 CFR 1.20(e)-(g))
The appropriate maintenance fee must be submitted with this petition.

STATEMENT
THE UNDERSIGNED CERTIFIES THAT THE DELAY IN PAYMENT OF THE MAINTENANCE FEE TO THIS PATENT WAS UNINTENTIONAL

PETITIONER(S) REQUEST THAT THE DELAYED PAYMENT OF THE MAINTENANCE FEE BE ACCEPTED AND THE PATENT REINSTATED

THIS PORTION MUST BE COMPLETED BY THE SIGNATORY OR SIGNATORIES

37 CFR 1.378(d) states: "Any petition under this section must be signed by an attorney or agent registered to practice before the Patent and Trademark Office, or by the patentee, the assignee, or other party in interest."

I certify, in accordance with 37 CFR 1.4(d)(4) that I am

◉ An attorney or agent registered to practice before the Patent and Trademark Office

○ A sole patentee

○ A joint patentee; I certify that I am authorized to sign this submission on behalf of all the other patentees.

○ A joint patentee; all of whom are signing this e-petition

○ The assignee of record of the entire interest

Patent Practitioner			
A signature of the applicant or representative is required in accordance with 37 CFR 1.33 and 10.18. Please see 37 CFR 1.4(d) for the form of the signature			
Signature	/Michael A. Collins/	Date (YYYY-MM-DD)	2010-03-18
Name	Michael A. Collins	Registration Number	59135

This collection of information is required by 37 CFR 1.378(c). The information is required to obtain or retain a benefit by the public which is to file (and by the USPTO to process) an application. Confidentiality is governed by 35 U.S.C. 122 and 37 CFR 1.11 and 1.14. This collection is estimated to take 1 hour to complete, including gathering, preparing, and submitting the completed application form to the USPTO. Time will vary depending upon the individual case. Any comments on the amount of time you require to complete this form and/ or suggestions for reducing this burden, should be sent to the Chief Information Officer, U.S. Patent and Trademark Office, U.S. Department of Commerce, P.O. Box 1450, Alexandria, VA 22313-1450. DO NOT SEND FEES OR COMPLETED FORMS TO THIS ADDRESS. **This form can only be used when in conjunction with EFS-Web. If this form is mailed to the USPTO, it may cause delays in reinstating the patent.**

Privacy Act Statement

The Privacy Act of 1974 (P.L. 93-579) requires that you be given certain information in connection with your submission of the attached form related to a patent application or patent. Accordingly, pursuant to the requirements of the Act, please be advised that: (1) the general authority for the collection of this information is 35 U.S.C. 2(b)(2); (2) furnishing of the information solicited is voluntary; and (3) the principal purpose for which the information is used by the U.S. Patent and Trademark Office is to process and/or examine your submission related to a patent application or patent. If you do not furnish the requested information, the U.S. Patent and Trademark Office may not be able to process and/or examine your submission, which may result in termination of proceedings or abandonment of the application or expiration of the patent.

The information provided by you in this form will be subject to the following routine uses:

1. The information on this form will be treated confidentially to the extent allowed under the Freedom of Information Act (5 U.S.C. 552) and the Privacy Act (5 U.S.C. 552a). Records from this system of records may be disclosed to the Department of Justice to determine whether the Freedom of Information Act requires disclosure of these records.

2. A record from this system of records may be disclosed, as a routine use, in the course of presenting evidence to a court, magistrate, or administrative tribunal, including disclosures to opposing counsel in the course of settlement negotiations.

3. A record in this system of records may be disclosed, as a routine use, to a Member of Congress submitting a request involving an individual, to whom the record pertains, when the individual has requested assistance from the Member with respect to the subject matter of the record.

4. A record in this system of records may be disclosed, as a routine use, to a contractor of the Agency having need for the information in order to perform a contract. Recipients of information shall be required to comply with the requirements of the Privacy Act of 1974, as amended, pursuant to 5 U.S.C. 552a(m).

5. A record related to an International Application filed under the Patent Cooperation Treaty in this system of records may be disclosed, as a routine use, to the International Bureau of the World Intellectual Property Organization, pursuant to the Patent Cooperation Treaty.

6. A record in this system of records may be disclosed, as a routine use, to another federal agency for purposes of National Security review (35 U.S.C. 181) and for review pursuant to the Atomic Energy Act (42 U.S.C. 218(c)).

7. A record from this system of records may be disclosed, as a routine use, to the Administrator, General Services, or his/her designee, during an inspection of records conducted by GSA as part of that agency's responsibility to recommend improvements in records management practices and programs, under authority of 44 U.S.C. 2904 and 2906. Such disclosure shall be made in accordance with the GSA regulations governing inspection of records for this purpose, and any other relevant (i.e., GSA or Commerce) directive. Such disclosure shall not be used to make determinations about individuals.

8. A record from this system of records may be disclosed, as a routine use, to the public after either publication of the application pursuant to 35 U.S.C. 122(b) or issuance of a patent pursuant to 35 U.S.C. 151. Further, a record may be disclosed, subject to the limitations of 37 CFR 1.14, as a routine use, to the public if the record was filed in an application which became abandoned or in which the proceedings were terminated and which application is referenced by either a published application, an application open to public inspections or an issued patent.

9. A record from this system of records may be disclosed, as a routine use, to a Federal, State, or local law enforcement agency, if the USPTO becomes aware of a violation or potential violation of law or regulation.

UNITED STATES PATENT AND TRADEMARK OFFICE

Commissioner for Patents
United States Patent and Trademark Office
P.O. Box 1450
Alexandria, VA 22313-1450
www.uspto.gov

In re Patent No. 6294995
Issue Date: September 25,2001
Application No. 09522812
Filed: March 10,2000
Attorney Docket No. 00-001

:
:DECISION GRANTING PETITION
:UNDER 37 CFR 1.378(c)
:

This is a decision on the electronic petition, filed March 18,2010 ,under 37 CFR 1.378(c) to accept the unintentionally delayed payment of the 7.5 year maintenance fee for the above-identified patent.

The petition is **GRANTED**.

The maintenance fee is accepted, and the above-identified patent reinstated as of March 18,2010 .
This decision also constitutes notice that the fee has been accepted. An electronic copy of the petition and this decision has been created as an entry in the Image File Wrapper. Nevertheless, petitioner should print and retain an independent copy.

Telephone inquiries related to this electronic decision should be directed to the Electronic Business Center at 1-866-217-9197.

UNITED STATES PATENT AND TRADEMARK OFFICE

COMMISSIONER FOR PATENTS
UNITED STATES PATENT AND TRADEMARK OFFICE
WASHINGTON, DC 20231
www.uspto.gov

Paper No. 6
MAIL

OCT 29 2002

DIRECTOR OFFICE
TECHNOLOGY CENTER 2600

WENDEROTH LIND & PONACK LLP
2033 K STREET NW
WASHINGTON, DC 20006

In re Application of :
Callahan, Thomas F. :
Application No. 09/522,834 :
Filed: March 10, 2000 :
For: NOISE BARRIER APPARATUS HAVING :
ACCOUSTIC WAVE DAMPING CUSHIONS :

DECISION ON REQUEST TO WITHDRAW AS ATTORNEY

This is a decision on the request to withdraw as attorney/agent of record filed on September 19, 2002.

A grantable request to withdraw as attorney/agent of record must:
(1) indicate the present mailing address of the attorney(s)/agent(s) who seek(s) to withdraw, and
(2) be signed by each attorney/agent seeking to withdraw or clearly be signed on their behalf, and
(3) be *approved* at least thirty (30) days prior to the maximum extendable period for response to any outstanding Office Action, and
(4) indicate the address to which future correspondence should be mailed.

Petitioner has met all of the above. Accordingly, the request is **GRANTED**.

All future communications from the Office will be directed to the address listed below until otherwise notified by applicant. Applicant is reminded of the obligation to promptly notify the Patent and Trademark Office of any change in correspondence address to ensure receipt of all communications from the Office.

Reinhard J. Eisenzopf
Special Program Examiner
Technology Center 2600
Communications
(703) 305-4711

cc: Thomas F. Callahan
University Research Engineers & Associates
10 Whip-Poor-Will
P.O. Box 1579
Grantham, NH 13753-1579

UNITED STATES PATENT AND TRADEMARK OFFICE

COMMISSIONER FOR PATENTS
UNITED STATES PATENT AND TRADEMARK OFFICE
WASHINGTON, D.C. 20231
www.uspto.gov

Paper No. 7

CAMPBELL & FLORES LLP
4370 LA JOLLA VILLAGE DRIVE
SUITE 700
SAN DIEGO CA 92122

COPY MAILED

MAR 2 9 2002

OFFICE OF PETITIONS

In re Application of
Kwoh, et al.
Application No. 09/523,033
Filed: March 10, 2000
Attorney Docket No. P-IM-4082

ON PETITION

This is a decision on the petition under 37 CFR 1.137(b), filed January 22, 2002, to revive the above-identified application.[1]

The petition is **GRANTED**.

The above-identified application became abandoned for failure to timely file a reply to the Notice to Comply with Requirements for Patent Applications Containing Nucleotide Sequence And/Or Amino Acid Sequence Disclosures, mailed October 4, 2000, which set a shortened statutory period for reply of one (1) month. No extensions of time under the provisions of 37 CFR 1.136(a) were obtained. Accordingly, the above-identified application became abandoned on November 5, 2000. A Notice of Abandonment was mailed on May 8, 2001.

Petitioner has met the requirements to revive the above-identified application, pursuant to 37 CFR 1.137(b). Petitioner submitted the required reply in the form of a sequence listing in both paper and computer readable form, paid the petition fee, and made the proper statement of unintentional delay.

It is not apparent whether the person signing the statement of unintentional delay was in a position to have firsthand or direct knowledge of the facts and circumstances of the delay at issue. Nevertheless, such statement is being treated as having been made as the result of a reasonable inquiry into the facts and circumstances of such delay.[2] In the event that such an inquiry has not been made, petitioner must make such an inquiry. If such inquiry results in the discovery that it is not correct that the entire delay in filing the required reply from the due date for the reply until the filing of a grantable petition pursuant to 37 CFR 1.137(b) was unintentional, petitioner must notify the Office.

---

[1] The instant petition is supplemented by petitioner's resubmission of a Sequence Limiting in computer readable form via Express Mail on March 25, 2002. The original computer readable form submitted with the petition on January 22, 2002 was destroyed through Office irradiation procedures.

[2] See 37 CFR 10.18(b) and Changes to Patent Practice and Procedure; Final Rule Notice, 62 Fed. Reg. 53131, 53178 (October 10, 1997), 1203 Off. Gaz. Pat. Office 63, 103 (October 21, 1997).

There is no indication that the person signing the instant petition was ever given a power of attorney or authorization of agent to prosecute the above-identified application. If the person signing the instant petition desires to receive future correspondence regarding this application, the appropriate power of attorney or authorization of agent must be submitted. While a courtesy copy of this decision is being mailed to the person signing the instant petition, all future correspondence will be directed to the address currently of record until such time as appropriate instructions are received to the contrary.

The application file is being forwarded to Technology Center 1600 for consideration of petitioner's sequence listing, filed March 25, 2002.

Telephone inquiries concerning this decision should be directed to the undersigned at (703) 305-0272.

Cliff Congo
Petitions Attorney
Office of Petitions
Office of the Deputy Commissioner
for Patent Examination Policy

cc: Leon R. Yankwich
Yankwich & Associates
130 Bishop Allen Drive
Cambridge, Massachusetts 02139

UNITED STATES PATENT AND TRADEMARK OFFICE

Commissioner for Patents
United States Patent and Trademark Office
P.O. Box 1450
Alexandria, VA 22313-1450
www.uspto.gov

In re Patent No. 6407670
Issue Date: June 18,2002
Application No. 09523047
Filed: March 10,2000
Attorney Docket No. PS-001

:

:DECISION GRANTING PETITION
:UNDER 37 CFR 1.378(c)

:

This is a decision on the electronic petition, filed February 12,2007 ,under 37 CFR 1.378(c) to accept the unintentionally delayed payment of the 3.5 year maintenance fee for the above-identified patent.

The petition is GRANTED.

The maintenance fee is accepted, and the above-identified patent reinstated as of February 12,2007 . This decision also constitutes notice that the fee has been accepted. An electronic copy of the petition and this decision has been created as an entry in an Image File Wrapper. Nevertheless, petitioner should print and retain an independent copy

Telephone inquires related to this electronic decision should be directed to the Electronic Business Center at 1-866-217-9197.

Under the Paperwork Reduction Act of 1995, no persons are required to respond to a collection of information unless it displays valid OMB control number.

PETITION TO ACCEPT UNINTENTIONALLY DELAYED PAYMENT OF MAINTENANCE FEE IN AN EXPIRED PATENT (37 CFR 1.378(c))

Patent Number	Issue Date (YYYY-MM-DD)	Application Number	Filing Date (YYYY-MM-DD)	Docket Number (if applicable)
6,407,670	2002-06-18	09/523,047	2000-03-10	

CAUTION: Maintenance fee (and surcharge, if any) payment must correctly identify: (1) the patent number and (2) the application number of the actual U.S. application leading to issuance of that patent to ensure the fee(s) is/are associated with the correct patent. 37 CFR 1.366(c) and (d).

SMALL ENTITY
☒ Patentee claims, or has previously claimed, small entity status. See 37 CFR 1.27.

LOSS OF ENTITLEMENT TO SMALL ENTITY STATUS
☐ Patentee is no longer entitled to small entity status. See 37 CFR 1.27(g)

NOT Small Entity		Small Entity	
Fee	Code	Fee	Code
○ 3 ½ year	(1551)	◉ 3 ½ year	(2551)
○ 7 ½ year	(1552)	○ 7 ½ year	(2552)
○ 11 ½ year	(1553)	○ 11 ½ year	(2553)

SURCHARGE
The surcharge required by 37 CFR 1.20(i)(2) (Fee Code 1558) must be paid as a condition of accepting unintentionally delayed payment of the maintenance fee.

MAINTENANCE FEE (37 CFR 1.20(e)-(g))
The appropriate maintenance fee must be submitted with this petition.

STATEMENT
THE UNDERSIGNED CERTIFIES THAT THE DELAY IN PAYMENT OF THE MAINTENANCE FEE TO THIS PATENT WAS UNINTENTIONAL

PETITIONER(S) REQUEST THAT THE DELAYED PAYMENT OF THE MAINTENANCE FEE BE ACCEPTED AND THE PATENT REINSTATED

THIS PORTION MUST BE COMPLETED BY THE SIGNATORY OR SIGNATORIES

37 CFR 1.378(d) states: "Any petition under this section must be signed by an attorney or agent registered to practice before the Patent and Trademark Office, or by the patentee, the assignee, or other party in interest."

I certify, in accordance with 37 CFR 1.4(d)(4) that I am

○ An attorney or agent registered to practice before the Patent and Trademark Office

○ A sole patentee

◉ A joint patentee; I certify that I am authorized to sign this submission on behalf of all the other patentees.

○ A joint patentee; all of whom are signing this e-petition

○ The assignee of record of the entire interest

A Joint Patentee and I certify that I am authorized to sign this submission on behalf of all the other patentees			
A signature of the applicant or representative is required in accordance with 37 CFR 1.33 and 10.18. Please see 37 CFR 1.4(d) for the form of the signature.			
Signature	/Hans J. Dysarsz/	Date (YYYY-MM-DD)	2007-02-12
Name	Hans J. Dysarsz		

This collection of information is required by 37 CFR 1.378(c). The information is required to obtain or retain a benefit by the public which is to file (and by the USPTO to process) an application. Confidentiality is governed by 35 U.S.C. 122 and 37 CFR 1.11 and 1.14. This collection is estimated to take 1 hour to complete, including gathering, preparing, and submitting the completed application form to the USPTO. Time will vary depending upon the individual case. Any comments on the amount of time you require to complete this form and/ or suggestions for reducing this burden, should be sent to the Chief Information Officer, U.S. Patent and Trademark Office, U.S. Department of Commerce, P.O. Box 1450, Alexandria, VA 22313-1450. DO NOT SEND FEES OR COMPLETED FORMS TO THIS ADDRESS. **This form can only be used when in conjunction with EFS-Web. If this form is mailed to the USPTO, it may cause delays in reinstating the patent.**

Privacy Act Statement

The Privacy Act of 1974 (P.L. 93-579) requires that you be given certain information in connection with your submission of the attached form related to a patent application or patent. Accordingly, pursuant to the requirements of the Act, please be advised that: (1) the general authority for the collection of this information is 35 U.S.C. 2(b)(2); (2) furnishing of the information solicited is voluntary; and (3) the principal purpose for which the information is used by the U.S. Patent and Trademark Office is to process and/or examine your submission related to a patent application or patent. If you do not furnish the requested information, the U.S. Patent and Trademark Office may not be able to process and/or examine your submission, which may result in termination of proceedings or abandonment of the application or expiration of the patent.

The information provided by you in this form will be subject to the following routine uses:

1. The information on this form will be treated confidentially to the extent allowed under the Freedom of Information Act (5 U.S.C. 552) and the Privacy Act (5 U.S.C. 552a). Records from this system of records may be disclosed to the Department of Justice to determine whether the Freedom of Information Act requires disclosure of these record s.

2. A record from this system of records may be disclosed, as a routine use, in the course of presenting evidence to a court, magistrate, or administrative tribunal, including disclosures to opposing counsel in the course of settlement negotiations.

3. A record in this system of records may be disclosed, as a routine use, to a Member of Congress submitting a request involving an individual, to whom the record pertains, when the individual has requested assistance from the Member with respect to the subject matter of the record.

4. A record in this system of records may be disclosed, as a routine use, to a contractor of the Agency having need for the information in order to perform a contract. Recipients of information shall be required to comply with the requirements of the Privacy Act of 1974, as amended, pursuant to 5 U.S.C. 552a(m).

5. A record related to an International Application filed under the Patent Cooperation Treaty in this system of records may be disclosed, as a routine use, to the International Bureau of the World Intellectual Property Organization, pursuant to the Patent Cooperation Treaty.

6. A record in this system of records may be disclosed, as a routine use, to another federal agency for purposes of National Security review (35 U.S.C. 181) and for review pursuant to the Atomic Energy Act (42 U.S.C. 218(c)).

7. A record from this system of records may be disclosed, as a routine use, to the Administrator, General Services, or his/her designee, during an inspection of records conducted by GSA as part of that agency's responsibility to recommend improvements in records management practices and programs, under authority of 44 U.S.C. 2904 and 2906. Such disclosure shall be made in accordance with the GSA regulations governing inspection of records for this purpose, and any other relevant (i.e., GSA or Commerce) directive. Such disclosure shall not be used to make determinations about individuals.

8. A record from this system of records may be disclosed, as a routine use, to the public after either publication of the application pursuant to 35 U.S.C. 122(b) or issuance of a patent pursuant to 35 U.S.C. 151. Further, a record may be disclosed, subject to the limitations of 37 CFR 1.14, as a routine use, to the public if the record was filed in an application which became abandoned or in which the proceedings were terminated and which application is referenced by either a published application, an application open to public inspections or an issued patent.

9. A record from this system of records may be disclosed, as a routine use, to a Federal, State, or local law enforcement agency, if the USPTO becomes aware of a violation or potential violation of law or regulation.

UNITED STATES PATENT AND TRADEMARK OFFICE

Commissioner for Patents
United States Patent and Trademark Office
P.O. Box 1450
Alexandria, VA 22313-1450
www.uspto.gov

Blakely Sokoloff Taylor & Zafman LLP
12400 Wilshire Boulevard
7th Floor
Los Angeles, CA 90025

MAIL

NOV 2 6 2004

DIRECTOR OFFICE
TECHNOLOGY CENTER 2100

In re Application of:
Cecilia GALARZA, et al.
Application No. 09/523,065
Filed: March 10, 2000
For: METHOD FOR AUTOMATED SYSTEM IDENTIFICATION

DECISION ON REQUEST TO WITHDRAW AS ATTORNEY OR AGENT

This is a decision on the Request For Withdrawal As Attorney Under 37 CFR § 1.36 and 0.40(c) filed September 3, 2004.

A Revocation And Substitution Of Power Of Attorney Under 37 CFR § 1.36 was filed on November 11, 2004. The Power Of Attorney revoked all prior Powers Of Attorney and appointed Wood, Herron & Evans LLP as the attorney(s) of record of the instant application. The Power of Attorney of November 11, 2004 was accepted. Accordingly, all communications from the U.S. Patent and Trademark Office to applicant are to be conducted by Wood, Herron & Evans, LLP.

For the above stated reasons, the request is **DISMISSED AS MOOT**.

No further communication to you regarding this application will be made.

Vincent N. Trans
Special Program Examiner
Technology Center 2100
Computer Architecture, Software, and
Information Security
571-272-3613

cc: Wood, Herron & Evans, LLP
2700 Carew Tower
441 Vine Street
Cincinnati, OH 45202

SPE K. Teska

SPE RESPONSE FOR CERTIFICATE OF CORRECTION

Paper No.: _____

DATE : 4/28/06

TO SPE OF : ART UNIT 2123

SUBJECT : Request for Certificate of Correction for Appl. No.: 09/523,065 Patent No.: 6947876

Please respond to this request for a certificate of correction within 7 days.

Please review the requested changes/corrections as shown in the **COCIN** document(s) in the IFW application image. No new matter should be introduced, nor should the scope or meaning of the claims be changed.

Please complete the response (see below) and forward the completed response to scanning using document code **COCX**.

Lamonte M. Newsome
Certificates of Correction Branch
703-308-9390 ext. 112

Thank You For Your Assistance

The request for issuing the above-identified correction(s) is hereby:

Note your decision on the appropriate box.

- [x] **Approved** — All changes apply.
- [ ] **Approved in Part** — Specify below which changes **do not** apply.
- [ ] **Denied** — State the reasons for denial below.

Comments: Correction of typographical errors only

SPE

2123
Art Unit

1634

UNITED STATES PATENT AND TRADEMARK OFFICE

Commissioner for Patents
United States Patent and Trademark Office
P.O. Box 1450
Alexandria, VA 22313-1450
www.uspto.gov

AUG 3 2004

HELEN LEE
HAMILTON, BROOK, SMITH & REYNOLDS, P.C.
530 VIRGINIA ROAD
P.O. BOX 9133
CONCORD MA 01742-9133

In re Application of	:
TULLY et al	:
Serial No.: 09/523,066	: Decision on Petition
Filing Date: 10 March 2000	:
Attorney Docket No. 1314.1058-001	:

This Petition under 37 CFR 1.144 was filed on 1 February 2002. It was only recently brought to the attention of the deciding official. The delay in acting upon this petition is regretted.

BACKGROUND

A review of the file history shows that the Office mailed a two-way Restriction Requirement which was subsequently made final.

The groupings are reproduced below:

> Restriction to one of the following inventions is required under 35 U.S.C. 121.
> Group I Claims 1- 10 and 16-23, drawn to a method of identifying a gene or genes in non-human animals, classified in class 424, subclass 9. 1.
> Group II. Claims 11- 15 and 24-26, drawn to a method of identifying a gene or genes in Drosophila, classified in class 424, subclass 9. 1.

The Examiner supported this restriction because she reasoned that the search was divergent and the inventions were distinct. Group II was elected with traverse.

Relevant portions of the independent claims are reproduced below:

For Group I:

> Claim 1. A method of identifying a gene or genes involved in transcription-dependent memory comprising the steps of:

(a) training non-human animals under conditions sufficient to induce transcription-dependent memory formation in said animals,
(b) extracting RNA from brain tissue of said animals trained in step (a)...

For Group II:

Claim 11. A method of identifying a gene or genes involved in transcription-dependent memory comprising the steps of:
(a) training Drosophila to induce transcription-dependent memory formation in said Drosophila;
(b) extracting RNA from head tissue of Drosophila trained in step (a)...

This Petition was filed 1 February 2002.

Subsequent to the filing of the petition, Applicants filed a Notice of Appeal on 15 October 2002, an Appeal Brief and Oath or Declaration on 23 April 2003 and an affidavit or declaration and Appeal Brief on 17 October 2003.

The Office found the first Appeal Brief defective under 37 CFR 1.192(c) for a problem with the required Summary of Invention.

The second Appeal Brief was found defective in view of the affidavit or declaration, which was considered untimely under 37 CFR 1.195.

DISCUSSION

The application, file history and petition have been considered carefully.

The petitioner points to Paper No. 7, page 2, lines 8-10 in which the Examiner states:

> the method of Invention I operates by training non-human animals and extracting brain-specific RNA for analysis and function to identify non-human gene or genes and the method of Invention II operates by training Drosophila and extracting head tissue-specific RNA for analysis and functions to identify a Drosophila gene or genes. Paper No. 7, at page 2, lines 12-16.

The Petitioner points to MPEP 803.02 which states in part,

> If the search and examination of an entire application can be made without serious burden, the examiner <u>must</u> examine it on the merits, even though it includes claims to distinct or independent inventions (emphasis added by petitioner).

This position is persuasive. The Examiner has not established that concurrent examination of both Groups I and II would require a burdensome search. Both Group I and Group I are classified in Class 424, subclass 9.1. Both Groups I and II overlap in scope. The Drosophila of Group II is a subset of the non-human animals of Group I and a search of Group II is not

divergent from that of Group I. A search for the brain tissue of animals corresponds to and overlaps with a search for the head tissue from Drosophila. Further, as rejection of Group II would apply to Group I. For these reasons, the restriction requirement between Group I and II is in error and is withdrawn.

DECISION

The petition is **GRANTED** for the reasons set forth above.

The final Office action mailed 10 April 2002 withdrawn in view of the restriction requirement being withdrawn. An action on the merits of all claims will follow.

In addition, Notification of Non-Compliance under 37 CFR 1.192(c), which improperly found the Appeal Brief defective under 37 CFR 1.195 because of the timeliness of the affidavit mailed 23 October 2003 has been vacated. Timeliness of an affidavit, declaration or exhibit under 37 CFR 1.195 is not a valid reason to find an Appeal Brief non-compliant under 37 CFR 1.192(c).

Applicant may file a request for a refund of the Notice of Appeal fee.

Should there be any questions with regard to this letter, please contact Special Program Examiner Julie Burke by letter addressed to the Director, Technology Center 1600, PO Box 1450, Alexandria VA 22313-1450 or by telephone at (571) 272-1600.

Jasemine C. Chambers

Jasemine Chambers
TC1600 Group Director

SPE RESPONSE FOR CERTIFICATE OF CORRECTION #16

Paper No.:20090324

DATE : March 24, 2009

TO SPE OF : ART UNIT 3661

SUBJECT : Request for Certificate of Correction on Patent No.: 6,560,604

A response is requested with respect to the accompanying request for a certificate of correction.

Please complete this form and return with file, within **7** days to:
Certificates of Correction Branch - PK 3-910
Palm location **7590** - Tel. No. 305-8201

With respect to the change(s) requested, correcting Office and/or Applicant's errors, should the patent read as shown in the certificate of correction? No new matter should be introduced, nor should the scope or meaning of the claims be changed.

Thank You For Your Assistance **Certificates of Correction Branch**

The request for issuing the above-identified correction(s) is hereby:
Note your decision on the appropriate box.

☐ **Approved** **All** changes apply.

☐ **Approved in Part** Specify below which changes **do not** apply.

☒ **Denied** State the reasons for denial below.

Comments:

Request for correction is Denied. The undersigned was able to determine the correct application numbers within 5-minutes using PALM. In each of the first five occurrences starting with 09/253,169, the examiner transposed the "5" and the "2", thus 09/253,169 should be 09/523,169. The insertion of 09/534,032 is correct and should not be simply deleted.

The patent holder should request a new Certificate of correction changing each "25" with "52" for the first five occurrences.

Thomas G. Black
SPE 3661, formerly 2771
571-272-6956

UNITED STATES PATENT AND TRADEMARK OFFICE

Commissioner for Patents
United States Patent and Trademark Office
P.O. Box 1450
Alexandria, VA 22313-1450
www.uspto.gov

Date Mailed : December 7, 2009

Patent No. : 6560604
Inventor : FASCENDA
Patent Issued : May 6, 2003
Title : SYSTEM, METHOD AND APPARATUS FOR AUTOMATICALLY AND
: DYNAMICALLY UPDATING OPTIONS, FEATURES, AND/OR SERVICES
: AVAILABLE TOA CLIENT DEVICE.

Re: Request for Certificate of Correction

Consideration has been given your request for the issuance of a certificate of correction for the above-identified patent under the provisions of Rule(s) 1.322.

Inspection of the application for the patent reveals that in connection with the alleged error pertaining to the deletion of lines 20-51 of column 1; the correction with respect to applicants request is not warranted. The examiner was able to determine the correct application numbers within 5 minutes using palm. Each of the first five occurrences starting with 09/253,169, the examiner transposed the "5" and the "2", thus, 09/253,169 should be 09/523169. The insertion of 09/534,032 is correct and should not be simply deleted. Accordingly, the patent holder should request a new Certificate of Correction changing each "25" with "52" for the first five occurrences.

In view of the foregoing applicants request in this matter is hereby denied Any telephone inquiry concerning this communication should be directed to Ms. A. Green at (703) 756-1541.

Mary Diggs, Supervisor
Decisions & Certificates
of Correction Branch
(703) 756-1580 or (703) 756- 1541

Manelli, Denison & Selter PLLC
ATTN: William H. Bollman
2000 M Streeet, N.W., 7th Flr.
Washington, DC 20036

/arg

UNITED STATES PATENT AND TRADEMARK OFFICE

COMMISSIONER FOR PATENTS
UNITED STATES PATENT AND TRADEMARK OFFICE
P.O. BOX 1450
ALEXANDRIA, VA 22313-1450
www.uspto.gov

Mannava & Kang, P.C.
11240 Waples Mill Road
Suite 300
Fairfax, VA 22030

MAILED

MAR 12 2010

OFFICE OF PETITIONS

In re Patent No. 6,560,604 :
Issue Date: May 6, 2003 :
Application No. 09/523,168 : ON PETITION
Filed: March 10, 2000 :
Attorney Docket No. 1753.0050000/JRK/AJF :

This is a decision on the petition, filed February 26, 2009, requesting that the requirement of 37 CFR 1.322(a)(1)(i) be waived or suspended pursuant to 37 CFR 1.183.

The petition is **DISMISSED.**

The petition title includes recitation of "Rule 183". However, the body of the petition makes no mention of what requirement of any rule is to be suspended or waived. Therefore the petition under 37 CFR 1.183 is dismissed as no specific relief under that rule has been requested.

The request for certificate of correction under 37 CFR 1.322 was dismissed in a letter mailed December 7, 2009.

A petition to the commissioner under 37 CFR 1.183 to waive or suspend a rule requires a fee of $400. As authorized the fee will be charged to deposit account no. 50-0687.

Any renewed petition may be addressed as follows:

By Mail: Mail Stop PETITION
Commissioner for Patents
P. O. Box 1450
Alexandria, VA 22313-1450

By hand: U. S. Patent and Trademark Office
Customer Service Window, Mail Stop Petitions
Randolph Building
401 Dulany Street
Alexandria, VA 22314

The centralized facsimile number is **(571) 273-8300.**

Correspondence regarding this decision may also be filed through the electronic filing system of the USPTO.

Telephone inquiries concerning this decision should be directed to Kimberly Inabinet at (571) 272-4618.

Carl Friedman
Petitions Examiner
Office of Petitions

SPE RESPONSE FOR CERTIFICATE OF CORRECTION

Paper No.:123005

DATE : December 30, 2005

TO SPE OF : ART UNIT 1725

SUBJECT : Request for Certificate of Correction on Patent No.: 6,803,337

A response is requested with respect to the accompanying request for a certificate of correction.

Please complete this form and return with file, within **7** days to:
Certificates of Correction Branch - PK 3-910
Palm location **7590** - Tel. No. 305-8201

With respect to the change(s) requested, correcting Office and/or Applicant's errors, should the patent read as shown in the certificate of correction? No new matter should be introduced, nor should the scope or meaning of the claims be changed.

Thank You For Your Assistance **Certificates of Correction Branch**

The request for issuing the above-identified correction(s) is hereby:
Note your decision on the appropriate box.

☒ **Approved** **All** changes apply.

☐ **Approved in Part** Specify below which changes **do not** apply.

☐ **Denied** State the reasons for denial below.

Comments:

SPE: Patrick Ryan **Art Unit** 1725

UNITED STATES PATENT AND TRADEMARK OFFICE

CERTIFICATE OF CORRECTION

PATENT NO. : 6,803,337

DATED: October 12, 2004

INVENTOR(S): Laura ZANIBELLI, et al.

It is certified that an error appears in the above-identified patent and that said Letters Patent is hereby corrected as shown below:

Column 9, Claim 1 should read:

A catalytic composition having a surface area $\geq$ 380 m^2/g and a pore volume $\geq$ 1.10 cm^3/g consisting of:

one or more oxides as a carrier and

a catalyst consisting of a beta zeolite, cobalt, a metal of Group VI B wherein said zeolite is present in a quantity ranging from 70 to 90% by weight, the weight percentage of cobalt varies from 1 to 10% with respect to the total weight of the catalyst, the weight percentage of the metal of Group VI B varies from 4 to 20% with respect to the total weight of the catalytic composition, and wherein cobalt and the metal of Group VI B are present in a molar ratio not greater than 2.

Column 11, Claim 22 should read:

The process of Claim 21, wherein the catalyst has a surface area of $\geq$380 m^2/g and a pore volume $\geq$ 1.10 cm^3/g.

Column 13, Claim 38 should read:

The process of claim 37, wherein the catalyst has a surface area $\geq$ 380 m^2/g and a pore volume $\geq$ 1.10 cm^3/g.

Mailing address of sender:

Customer Number
22850

Tel. (703) 413-3000
Fax. (703) 413-2220
(OSMMN 03/02)

Patent No. 6,803,337

No. of add'l copies
@ .30 per page

DEC 5 2005

UNITED STATES PATENT AND TRADEMARK OFFICE

CERTIFICATE OF CORRECTION

PATENT NO. : 6,803,337

DATED: October 12, 2004

INVENTOR(S): Laura ZANIBELLI, et al.

It is certified that an error appears in the above-identified patent and that said Letters Patent is hereby corrected as shown below:

Column 13, Claim 39 should read:

A catalytic composition having a surface area $\geq$ 380 m^2/g and a pore volume $\geq$ 1.10 cm^3/g consisting of

one or more oxides as a carrier and

a catalyst consisting of a beta zeolite, cobalt, a metal of Group VI B wherein said zeolite is present in a quantity ranging from 70 to 90% by weight, the weight percentage of cobalt varies from 1 to 10% with respect to the total weight of the catalyst, the weight percentage of the metal of Group VI B varies from 4 to 20% with respect to the total weight of the catalytic composition, and wherein cobalt and the metal of Group VI B are present in a molar ratio not greater than 2, prepared with a process consisting of the following steps:

a) an alcoholic dispersion is prepared, containing a soluble salt of cobalt, beta zeolite and one or more organic compounds capable of generating the supporting oxide or oxides;

b) an aqueous solution is prepared containing a soluble salt of the metal of group VI B and, optionally, tetrealkylammonium hydroxide having the formula R4NOH;

c) the alcoholic dispersion and the aqueous dispersion are mixed and a gel is obtained;

d) ageing the gel at a temperature ranging from 10 to 40°C;

e) drying the gel; and

f) calcinating the gel.

Mailing address of sender:

Customer Number
22850

Tel. (703) 413-3000
Fax. (703) 413-2220

Patent No. 6,803,337

No. of add'l copies
@ .30 per page

DEC 5 2005

UNITED STATES PATENT AND TRADEMARK OFFICE

CERTIFICATE OF CORRECTION

PATENT NO. : 6,803,337

DATED: October 12, 2004

INVENTOR(S): Laura ZANIBELLI, et al.

It is certified that an error appears in the above-identified patent and that said Letters Patent is hereby corrected as shown below:

Column 9, Claim 1 should read:

A catalytic composition having a surface area ≥ 380 m^2/g and a pore volume ≥ 1.10 cm^3/g consisting of:

one or more oxides as a carrier and

a catalyst consisting of a beta zeolite, cobalt, a metal of Group VI B wherein said zeolite is present in a quantity ranging from 70 to 90% by weight, the weight percentage of cobalt varies from 1 to 10% with respect to the total weight of the catalyst, the weight percentage of the metal of Group VI B varies from 4 to 20% with respect to the total weight of the catalytic composition, and wherein cobalt and the metal of Group VI B are present in a molar ratio not greater than 2.

Column 11, Claim 22 should read:

The process of Claim 21, wherein the catalyst has a surface area of ≥380 m^2/g and a pore volume ≥ 1.10 cm^3/g.

Column 13, Claim 38 should read:

The process of claim 37, wherein the catalyst has a surface area ≥ 380 m^2/g and a pore volume ≥ 1.10 cm^3/g.

Mailing address of sender:

Customer Number
22850

Tel. (703) 413-3000
Fax. (703) 413-2220
(OSMMN 03/02)

Patent No. 6,803,337

No. of add'l copies
@ .30 per page

DEC 5 2005

UNITED STATES PATENT AND TRADEMARK OFFICE

CERTIFICATE OF CORRECTION

PATENT NO. : 6,803,337

DATED: October 12, 2004

INVENTOR(S): Laura ZANIBELLI, et al.

It is certified that an error appears in the above-identified patent and that said Letters Patent is hereby corrected as shown below:

Column 13, Claim 39 should read:

A catalytic composition having a surface area ≥ 380 m^2/g and a pore volume ≥ 1.10 cm^3/g consisting of

one or more oxides as a carrier and

a catalyst consisting of a beta zeolite, cobalt, a metal of Group VI B wherein said zeolite is present in a quantity ranging from 70 to 90% by weight, the weight percentage of cobalt varies from 1 to 10% with respect to the total weight of the catalyst, the weight percentage of the metal of Group VI B varies from 4 to 20% with respect to the total weight of the catalytic composition, and wherein cobalt and the metal of Group VI B are present in a molar ratio not greater than 2, prepared with a process consisting of the following steps:

a) an alcoholic dispersion is prepared, containing a soluble salt of cobalt, beta zeolite and one or more organic compounds capable of generating the supporting oxide or oxides;

b) an aqueous solution is prepared containing a soluble salt of the metal of group VI B and, optionally, tetrealkylammonium hydroxide having the formula R4NOH;

c) the alcoholic dispersion and the aqueous dispersion are mixed and a gel is obtained;

d) ageing the gel at a temperature ranging from 10 to 40°C;

e) drying the gel; and

f) calcinating the gel.

Mailing address of sender:

Customer Number
22850

Tel. (703) 413-3000
Fax. (703) 413-2220

Patent No. 6,803,337

No. of add'l copies
@ .30 per page

DEC 5 2005

UNITED STATES PATENT AND TRADEMARK OFFICE

COMMISSIONER FOR PATENTS
UNITED STATES PATENT AND TRADEMARK OFFICE
P.O. BOX 1450
ALEXANDRIA, VA 22313-1450
www.uspto.gov

MAIL

Paper No. 5

MAY 2 6 2005

DIRECTOR OFFICE
TECHNOLOGY CENTER 2600

ALEXANDER L. CHENG
12 HIDDEN GLEN ROAD
SCARSDALE NY 10583

In re Application of
Alexander L. Cheng
Application No. 09/523,185
Filed: March 10, 2000
For: **METHOD AND APPARATUS FOR PARALLEL OPERATION IN A MULTIPLE ACCESS NETWORK**

DECISION ON PETITION

This is a decision on the Petition to Withdraw the Holding of Abandonment filed April 27, 2005, pursuant to 37 C.F.R. § 1.181(a). No fee is required.

This application became abandoned for failure to timely reply to a non-final Office action mailed on June 20, 2003. A Notice of Abandonment was mailed on December 29, 2003.

Petitioner alleges to have timely filed a proper response, by facsimile on September 15, 2003. In support, petitioner has provided as evidence, copies of the response which included a certificate of transmittal signed by applicant.

37 C.F.R. § 1.8 Certificate of mailing or transmission states in part:
(a) Except in the cases enumerated in paragraph (a)(2) of this section, correspondence required to be filed in the Patent and Trademark Office within a set period of time will be considered as being timely filed if the procedure described in this section is followed. The actual date of receipt will be used for all other purposes.

(1) Correspondence will be considered as being timely filed if:

(i) The correspondence is mailed or transmitted prior to expiration of the set period of time by being:

(A) Addressed as set out in § 1.1(a) and deposited with the U.S. Postal Service with sufficient postage as first class mail; or

(B) Transmitted by facsimile to the Patent and Trademark Office in accordance with § 1.6(d); and

(ii) The correspondence includes a certificate for each piece of correspondence stating the date of deposit or transmission. The person signing the certificate should have reasonable basis to expect that the correspondence would be mailed or transmitted on or before the date indicated. [emphasis added]

Although the facsimile transmittal sheet does not reflect the Office's official facsimile number, it has been determined that facsimile number used by applicants was a facsimile number associated with the U.S. Patent and Trademark Office. Therefore, it is concluded that the papers were timely filed via facsimile transmission in compliance with the requirements of 37 CFR 1.8(a)(1).

Accordingly, Petitioner has complied with the requirements of 37 C.F.R. §1.8(a) above. The petition is **GRANTED**.

The holding of abandonment is withdrawn.

The application file is being forwarded to the technical support staff for processing the response to the non-final Office action which accompanied the petition as well as the request for change of correspondence address. Thereafter, the application will be forwarded to the examiner for appropriate action in due course.

Petitioner is reminded that the Official Facsimile Number for all incoming correspondence to the Office is (703) 872-9306. Petitioner may want to note this number in order to avoid any future correspondence problems.

Dwayne D. Bost
Special Program Examiner
Technology Center 2600
Communications

Under the Paperwork Reduction Act of 1995, no persons are required to respond to a collection of information unless it displays valid OMB control number.

PETITION TO ACCEPT UNINTENTIONALLY DELAYED PAYMENT OF MAINTENANCE FEE IN AN EXPIRED PATENT (37 CFR 1.378(c))

Patent Number	Issue Date (YYYY-MM-DD)	Application Number	Filing Date (YYYY-MM-DD)	Docket Number (if applicable)
6,411,760	2002-06-25	09/523,234	2000-03-10	1028-003U

CAUTION: Maintenance fee (and surcharge, if any) payment must correctly identify: (1) the patent number and (2) the application number of the actual U.S. application leading to issuance of that patent to ensure the fee(s) is/are associated with the correct patent. 37 CFR 1.366(c) and (d).

SMALL ENTITY
☒ Patentee claims, or has previously claimed, small entity status. See 37 CFR 1.27.

LOSS OF ENTITLEMENT TO SMALL ENTITY STATUS
☐ Patentee is no longer entitled to small entity status. See 37 CFR 1.27(g)

NOT Small Entity		Small Entity	
Fee	Code	Fee	Code
○ 3 ½ year	(1551)	◉ 3 ½ year	(2551)
○ 7 ½ year	(1552)	○ 7 ½ year	(2552)
○ 11 ½ year	(1553)	○ 11 ½ year	(2553)

SURCHARGE
The surcharge required by 37 CFR 1.20(i)(2) (Fee Code 1558) must be paid as a condition of accepting unintentionally delayed payment of the maintenance fee.

MAINTENANCE FEE (37 CFR 1.20(e)-(g))
The appropriate maintenance fee must be submitted with this petition.

STATEMENT
THE UNDERSIGNED CERTIFIES THAT THE DELAY IN PAYMENT OF THE MAINTENANCE FEE TO THIS PATENT WAS UNINTENTIONAL

PETITIONER(S) REQUEST THAT THE DELAYED PAYMENT OF THE MAINTENANCE FEE BE ACCEPTED AND THE PATENT REINSTATED

THIS PORTION MUST BE COMPLETED BY THE SIGNATORY OR SIGNATORIES

37 CFR 1.378(d) states: "Any petition under this section must be signed by an attorney or agent registered to practice before the Patent and Trademark Office, or by the patentee, the assignee, or other party in interest."

I certify, in accordance with 37 CFR 1.4(d)(4) that I am

○ An attorney or agent registered to practice before the Patent and Trademark Office

○ A sole patentee

○ A joint patentee; I certify that I am authorized to sign this submission on behalf of all the other patentees.

○ A joint patentee; all of whom are signing this e-petition

◉ The assignee of record of the entire interest

The Assignee of record of the entire interest			
Under 37 CFR 3.71 an assignee becomes of record by filing a statement in compliance with 37 CFR 3.73(b). Signature requirements are set forth in 37 CFR 1.4(d), and the undersigned certifies that he / she is empowered to act on behalf of the assignee of the entire interest			
Signature	/Francisco J. Avellanet/	Date (YYYY-MM-DD)	2007-06-30
Name	Francisco J. Avellanet		
Enter Reel and Frame Number		Remove	
Reel Number	019511	Frame Number	0422
Click ADD for additional Reel Number and Frame Number		Add	

This collection of information is required by 37 CFR 1.378(c). The information is required to obtain or retain a benefit by the public which is to file (and by the USPTO to process) an application. Confidentiality is governed by 35 U.S.C. 122 and 37 CFR 1.11 and 1.14. This collection is estimated to take 1 hour to complete, including gathering, preparing, and submitting the completed application form to the USPTO. Time will vary depending upon the individual case. Any comments on the amount of time you require to complete this form and/ or suggestions for reducing this burden, should be sent to the Chief Information Officer, U.S. Patent and Trademark Office, U.S. Department of Commerce, P.O. Box 1450, Alexandria, VA 22313-1450. DO NOT SEND FEES OR COMPLETED FORMS TO THIS ADDRESS. **This form can only be used when in conjunction with EFS-Web. If this form is mailed to the USPTO, it may cause delays in reinstating the patent.**

Privacy Act Statement

The Privacy Act of 1974 (P.L. 93-579) requires that you be given certain information in connection with your submission of the attached form related to a patent application or patent. Accordingly, pursuant to the requirements of the Act, please be advised that: (1) the general authority for the collection of this information is 35 U.S.C. 2(b)(2); (2) furnishing of the information solicited is voluntary; and (3) the principal purpose for which the information is used by the U.S. Patent and Trademark Office is to process and/or examine your submission related to a patent application or patent. If you do not furnish the requested information, the U.S. Patent and Trademark Office may not be able to process and/or examine your submission, which may result in termination of proceedings or abandonment of the application or expiration of the patent.

The information provided by you in this form will be subject to the following routine uses:

1. The information on this form will be treated confidentially to the extent allowed under the Freedom of Information Act (5 U.S.C. 552) and the Privacy Act (5 U.S.C. 552a). Records from this system of records may be disclosed to the Department of Justice to determine whether the Freedom of Information Act requires disclosure of these record s.

2. A record from this system of records may be disclosed, as a routine use, in the course of presenting evidence to a court, magistrate, or administrative tribunal, including disclosures to opposing counsel in the course of settlement negotiations.

3. A record in this system of records may be disclosed, as a routine use, to a Member of Congress submitting a request involving an individual, to whom the record pertains, when the individual has requested assistance from the Member with respect to the subject matter of the record.

4. A record in this system of records may be disclosed, as a routine use, to a contractor of the Agency having need for the information in order to perform a contract. Recipients of information shall be required to comply with the requirements of the Privacy Act of 1974, as amended, pursuant to 5 U.S.C. 552a(m).

5. A record related to an International Application filed under the Patent Cooperation Treaty in this system of records may be disclosed, as a routine use, to the International Bureau of the World Intellectual Property Organization, pursuant to the Patent Cooperation Treaty.

6. A record in this system of records may be disclosed, as a routine use, to another federal agency for purposes of National Security review (35 U.S.C. 181) and for review pursuant to the Atomic Energy Act (42 U.S.C. 218(c)).

7. A record from this system of records may be disclosed, as a routine use, to the Administrator, General Services, or his/her designee, during an inspection of records conducted by GSA as part of that agency's responsibility to recommend improvements in records management practices and programs, under authority of 44 U.S.C. 2904 and 2906. Such disclosure shall be made in accordance with the GSA regulations governing inspection of records for this purpose, and any other relevant (i.e., GSA or Commerce) directive. Such disclosure shall not be used to make determinations about individuals.

8. A record from this system of records may be disclosed, as a routine use, to the public after either publication of the application pursuant to 35 U.S.C. 122(b) or issuance of a patent pursuant to 35 U.S.C. 151. Further, a record may be disclosed, subject to the limitations of 37 CFR 1.14, as a routine use, to the public if the record was filed in an application which became abandoned or in which the proceedings were terminated and which application is referenced by either a published application, an application open to public inspections or an issued patent.

9. A record from this system of records may be disclosed, as a routine use, to a Federal, State, or local law enforcement agency, if the USPTO becomes aware of a violation or potential violation of law or regulation.

UNITED STATES PATENT AND TRADEMARK OFFICE

Commissioner for Patents
United States Patent and Trademark Office
P.O. Box 1450
Alexandria, VA 22313-1450
www.uspto.gov

In re Patent No. 6411760
Issue Date: June 25,2002
Application No. 09523234
Filed: March 10,2000
Attorney Docket No. AVE-039

:

:DECISION GRANTING PETITION
:UNDER 37 CFR 1.378(c)

:

This is a decision on the electronic petition, filed July 16,2007 ,under 37 CFR 1.378(c) to accept the unintentionally delayed payment of the 3.5 year maintenance fee for the above-identified patent.

The petition is GRANTED.

The maintenance fee is accepted, and the above-identified patent reinstated as of July 16,2007 . This decision also constitutes notice that the fee has been accepted. An electronic copy of the petition and this decision has been created as an entry in an Image File Wrapper. Nevertheless, petitioner should print and retain an independent copy

Telephone inquires related to this electronic decision should be directed to the Electronic Business Center at 1-866-217-9197.

UNITED STATES PATENT AND TRADEMARK OFFICE

COMMISSIONER FOR PATENTS
UNITED STATES PATENT AND TRADEMARK OFFICE
P.O. BOX 1450
ALEXANDRIA, VA 22313-1450
www.uspto.gov

Paper No. 13

VERIZON CORPORATE SERVICES GROUP INC.
C/O CHRISTIAN R. ANDERSEN
600 HIDDEN RIDGE DRIVE
MAILCODE HQE03H14
IRVING TX 75038

MAIL

DEC 2 7 2004

DIRECTOR OFFICE
TECHNOLOGY CENTER 2600

In re Application of
Joseph Allen, et al.
Application No. 09/523,267
Filed: March 10, 2000
For: **INTELLEGENT ACCESS CONTROL SYSTEM**

DECISION ON PETITION
TO WITHDRAW HOLDING OF
ABANDONMENT

This is in response to the Petition to Withdraw the Holding of Abandonment filed September 14, 2004, which is treated as pursuant to 37 CFR §1.181. No fee is required.

The application was held as abandoned for failure to timely respond to the final Office action mailed January 15, 2004. A Notice of Abandonment was mailed on August 25, 2004.

Petitioner states that they did not receive the final Office action mailed January 15, 2004, but that the Notice of Abandonment was forwarded to them by the Law firm of Morgan Lewis & Bockius LLP of Washington D.C.

In the absence of any irregularity in the mailing of an Office action, there is a strong presumption that the Office action was properly mailed to practitioner at the address of record. This presumption may be overcome by a showing that the Office action was not in fact received. The showing required to establish the failure to receive an Office communication must include a statement from the practitioner stating that the Office communication was not received by the practitioner and attesting to the fact that a search of the file jacket and docket records indicates that the Office communication was not received. A copy of the docket record where the non-received Office communication would have been entered had it been received and docketed must be attached to and referenced in practitioner's statement. See "Withdrawing the Holding of Abandonment When Office Actions Are Not Received" 1156 Official Gazette 53 (November 16, 1993) and M.P.E.P. § 711.03(c). The showing outlined above may not be sufficient if there are circumstances that point to a conclusion that the Office communication may have been lost after receipt rather than a conclusion that the Office communication was lost in the mail.

Petitioner has not complied with the requirements set forth above. However, a review of the record reveals that two requests for Change of Address/Power of Attorney were filed in the subject application, within 6 days of each other. The first Change of Address/Power of Attorney was for the Law firm of Morgan Lewis & Bockius LLP of Washington D.C., filed March 28,

2003. The second Change of Address/Power of Attorney lists the correspondence address set forth above and appoints the attorneys associated with customer number 32127. This second Change of Address/Power of Attorney was filed April 3, 2003. However, it appears as though the first Change of Address/Power of Attorney was processed after the second Change request. Therefore, the correspondence address was changed to the Law firm of Morgan Lewis & Bockius LLP of Washington D.C. Thus, there was obviously an irregularity in mailing of the final Office action.

Accordingly, the application was not abandoned in fact, and the holding of abandonment is withdrawn.

The petition is **GRANTED**.

The application file is being forwarded to the Technology Center's technical support staff for re-mailing the final Office action. A new three month statutory period for response to the final Office action will be reset to begin as of the mailing date of the new final Office action.

Dwayne Bost
Special Program Examiner
Technology Center 2600
Communications

UNITED STATES PATENT AND TRADEMARK OFFICE

COMMISSIONER FOR PATENTS
UNITED STATES PATENT AND TRADEMARK OFFICE
P.O. BOX 1450
ALEXANDRIA, VA 22313-1450
www.uspto.gov

MAILED
FROM DIRECTORS OFFICE

JUL 26 2004

TECHNOLOGY CENTER 3600

Joseph Yang
Skadden Arps Slate Meagher & Flom LLP
525 University Avenue
Suite 1100
Palo Alto, CA 94301

In re application of:
Lance Johnson et al.
Application No. 09/523,405
Filed: March 10, 2000
For: ROUTING METHODS AND SYSTEMS FOR INCREASING PAYMENT TRANSACTION VOLUME AND PROFITABILITY

DECISION ON REQUEST FOR WITHDRAWAL OF ATTORNEY

This is a decision on the request filed on June 7, 2004, under 37 CFR 1.36 and MPEP 402.06, requesting permission to withdraw as the attorney of record in the above-identified application.

The request is **NOT APPROVED**.

Under 37 CFR 1.36 an attorney may withdraw only upon application to and approval by the Commissioner. It should be noted that a withdrawal is effective when approved, not when filed. Besides giving due notice to his or her client and delivering to the client all papers and property to which the client is entitled as specified under 37 CFR 10.40, approval of such a request requires that the following conditions be met:

A) Each attorney of record must sign the notice of withdrawal, or the notice must contain a clear indication of one attorney signing on behalf of another, because the Office does not recognize law firms;

B) A proper reason for the withdrawal as enumerated in 37 CFR 10.40(b) or subsection (1)-(6) of 37 CFR 10.40(c) must be provided; and

C) If withdrawal is requested in accordance with 37 CFR 10.40(c) above, there must be at least 30 days between approval of the withdrawal and the later of the expiration date of a time period for reply or the expiration date of the period which can be obtained by a petition and fee for extension of time under 37 CFR 1.136(a).

The request to withdraw as attorney is not accepted in the above-identified application because the request lacks condition A) above.

As to condition A), it is noted that the power of attorney by assignee filed March 10, 2000 is improper since it lacks a proper statement submitted in accordance with 37 CFR 3.73(b) providing documentary evidence of a chain of title from the original owners to the assignee or a statement specifying where this evidence is recorded in the Office (e.g., reel and frame number). Therefore, the assignee does not have power to appoint a power of attorney. Additionally, it is noted that the attorney signing the request does not have power of attorney in this application, and there is no record of power of attorney ever being given to the attorney making the request.

Kenneth J. Dorner
Special Programs Examiner
Patent Technology Center 3600
(703) 308-0866

KJD/vdb: 7/20/04

UNITED STATES PATENT AND TRADEMARK OFFICE

Commissioner for Patents
United States Patent and Trademark Office
Washington, D.C. 20231
www.uspto.gov

Paper No. 12

Townsend and Townsend and Crew
Two Embacadero Center, 8th Floor
San Francisco, CA 94111

COPY MAILED

JAN 1 3 2003

OFFICE OF PETITIONS

In re Application of :
David Straayer et al. :
Application No. 09/523,407 :
Filed: March 10, 2000 :
Attorney Docket No. 018513-001310US :

ON PETITION

This is a decision on the petition under 37 CFR 1.137(b), filed December 4, 2002, to revive the above-identified application.

The petition is **GRANTED**.

The above-identified application became abandoned for failure to submit formal drawings in a timely manner in reply to the Notice to File Corrected Application Papers mailed September 12, 2002, which set a reply period of (30) days. Accordingly, the application became abandoned on October 13, 2002.

Telephone inquiries concerning this decision should be directed to Latrice Bond at (703) 308-6911.

The application file is being forwarded to the Publishing Division

Latrice Bond

Latrice Bond
Paralegal Specialist
Office of Petitions
Office of the Deputy Commissioner
for Patent Examination Policy

UNITED STATES PATENT AND TRADEMARK OFFICE

COMMISSIONER FOR PATENTS
UNITED STATES PATENT AND TRADEMARK OFFICE
P.O. BOX 1450
ALEXANDRIA, VA 22313-1450
www.uspto.gov

JJGJR.: 02-05

Paper No: 16

SNELL & WILMER
ONE ARIZONA CENTER
400 EAST VAN BUREN
PHOENIX AZ 85004-0001

COPY MAILED

FEB 18 2005

OFFICE OF PETITIONS

In re Application of :
Simons :
Application No. 09/523,410 :
Filing Date: 10 March, 2000 :
Attorney Docket No.70655.7700 :

This is a decision on the petition filed on 4 October, 2004, alleging unintentional delay under 37 C.F.R. §1.137(b).

For the reasons set forth below, the petition as considered under 37 C.F.R. §1.137(b) is **GRANTED**.

BACKGROUND

The record reflects that:

- Petitioner failed to reply timely and properly to the non-final Office action mailed on 9 July, 2003, with response due absent extension of time on or before 9 October, 2003;
- the application went abandoned after midnight 9 October, 2003;
- the Office mailed the Notice of Abandonment on 19 February, 2004;

- on 4 October, 2004, Petitioner filed the instant petition and fee, the reply in the form of an amendment, and made a statement of unintentional delay.

STATUTES, REGULATIONS AND ANALYSIS

Congress has authorized the Commissioner to "revive an application if the delay is shown to the satisfaction of the Commissioner to have been "unavoidable." 35 U.S.C. §133 (1994).[1]

The regulations at 37 C.F.R. §1.137(a) and (b) set forth the requirements for a petitioner to revive a previously unavoidably or unintentionally, respectively, abandoned application under this congressional grant of authority. The language of 35 U.S.C. §133 and 37 C.F.R. §1.137(a) is clear, unambiguous, and without qualification: the delay in tendering the reply to the outstanding Office action, as well as filing the first petition seeking revival, must have been unavoidable for the reply now to be accepted on petition.[2]

Delays in responding properly raise the question whether delays are unavoidable.[3] Where there is a question whether the delay was unavoidable, Petitioners must meet the burden of establishing that the delay was unavoidable within the meaning of 35 U.S.C. §133 and 37 C.F.R. §1.137(a).[4] And the Petitioner must be diligent in attending to the matter.[5] Failure to do so does not constitute the care required under Pratt, and so cannot satisfy the test for diligence and due care.

(By contrast, unintentional delays are those that do not satisfy the very strict statutory and regulatory requirements of unavoidable delay, and also, by definition, are not intentional.[6]))

The requirements for a grantable petition under 37 C.F.R. §1.137(b) are the petition and fee, a

---

[1] 35 U.S.C. §133 provides:
35 U.S.C. §133 Time for prosecuting application.
Upon failure of the applicant to prosecute the application within six months after any action therein, of which notice has been given or mailed to the applicant, or within such shorter time, not less than thirty days, as fixed by the Commissioner in such action, the application shall be regarded as abandoned by the parties thereto, unless it be shown to the satisfaction of the Commissioner that such delay was unavoidable.

[2] Therefore, by example, an unavoidable delay in the payment of the Filing Fee might occur if a reply is shipped by the US Postal Service, but due to catastrophic accident, the delivery is not made.

[3] See: *Changes to Patent Practice and Procedure; Final Rule Notice*, 62 *Fed. Reg.* at 53158-59 (October 10, 1997), 1203 *Off. Gaz. Pat. Office* at 86-87 (October 21, 1997).

[4] See: In re Application of G, 11 USPQ2d 1378, 1380 (Comm'r Pats. 1989).

[5] See: Diligence in Filing Petitions to Revive and Petitions to Withdraw the Holding of Abandonment, 1124 Off. Gaz. Pat. Office 33 (March 19, 1991). It was and is Petitioner's burden to exercise diligence in seeking either to have the holding of abandonment withdrawn or the application revived. See 1124 Off. Gaz. Pat. Office supra.

[6] Therefore, by example, an unintentional delay in the reply might occur if the reply and transmittal form are to be prepared for shipment by the US Postal Service, but other pressing matters distract one's attention and the mail is not timely deposited for shipment.

showing of unintentional delay, a proper reply, and–where appropriate--a terminal disclaimer and fee.

Petitioner has satisfied the requirements of the regulation.

Given the period for which the instant application was abandoned, the record (including the petition filed on 4 October, 2004) does not necessitate a finding that the delay between midnight 9 October, 2003, and 4 October, 2004, was not unintentional.

Rather, the Patent and Trademark Office is relying in this matter on duty of candor and good faith of Petitioner/Counsel Howard I.. Sobelman (Reg. No. 9,038) when accepting Petitioner's representation that the delay in filing the response was unintentional.[7]

CONCLUSION

The instant petition under 37 C.F.R. §1.137(b) hereby is **granted**.

The instant application is released to Technology Center 2100 for further processing.

Telephone inquiries concerning this decision may be directed to the undersigned at (571) 272-3214.

John J. Gillon, Jr.
Senior Attorney
Office of Petitions

[7] See Changes to Patent Practice and Procedure, 62 Fed. Reg. at 53160 and 53178, 1203 Off. Gaz. Pat. Office at 88 and 103 (responses to comments 64 and 109)(applicant obligated under 37 C.F.R. §10.18 to inquire into the underlying facts and circumstances when providing the statement required by 37 C.F.R. §1.137(b) to the Patent and Trademark Office).

UNITED STATES PATENT AND TRADEMARK OFFICE

Commissioner for Patents
United States Patent and Trademark Office
P.O. Box 1450
Alexandria, VA 22313-1450
www.uspto.gov

Paper No.

Modiano & Associati
Via Meravigli 16
20123 Milano
ITALY

COPY MAILED
FEB 16 2005
OFFICE OF PETITIONS

In re Application of :
Mario Beretta :
Application No. 09/523,708 : DECISION ON PETITION
Filed: March 13, 2000 :
Title: 33330/GM/vp :

This is a decision on the petition filed on August 9, 2004, pursuant to 37 CFR 1.137(b), to revive the above-identified application.

The petition is **GRANTED**.

On July 29, 2004, the Office mailed a Notice of Abandonment in the above-identified application. The Notice stated that the application had become abandoned for failure to timely file a proper reply to the Office letter mailed November 6, 2002. A review of the record reveals that, on February 13, 2003, applicant filed a Notice of Appeal. Then, on April 14, 2003, applicant filed a request for extension of time within 2 months. However, no response accompanied this extension. Moreover, no further response and no further extensions were filed. Applicant repeatedly states that a paper was filed on December 11, 2002; however, no such paper is of record in the application. Nor does applicant support their contention with a copy of that response along with proof of its filing on December 11, 2002. In view thereof, the application became abandoned effective April 14, 2003.

On instant petition, applicant files a Request for Continued Examination (and submission); pays the petition fee; and makes the required statement of unintentional delay.

The application file is being forwarded to Technology Center 1764 for consideration of the submission under §1.114 (the amendment previously filed October 14, 2002 - It is again noted that the amendment petitioner maintains was filed on December 11, 2002, is not of record).

Telephone inquiries specific to this decision should be directed to the undersigned at (571) 272-3219.

Nancy Johnson
Senior Petitions Attorney
Office of Petitions

UNITED STATES PATENT AND TRADEMARK OFFICE

COMMISSIONER FOR PATENTS
UNITED STATES PATENT AND TRADEMARK OFFICE
P.O. BOX 1450
ALEXANDRIA, VA 22313-1450
www.uspto.gov

NOV - 5 2003

#14

EDWARDS & ANGELL, LLP
P.O. Box 9169
Boston, MA 02209

In re Application of
Pamela Zeitlin et al
Serial No.: 09/523,776
Filed: March 11, 2000
Attorney Docket No. : 49632

WITHDRAWAL OF ABANDONMENT

This is in response to the petition under 37 CFR 1.181, filed August 27, 2003, requesting withdrawal of abandonment of the above-identified application based on non-receipt of an Office action.

A review of the file history of the application shows that the examiner mailed a Final Office action to applicants, on December 31, 2002, at the original correspondence address: DIKE BRONSTEIN ROBERTS & CUSHMAN, 130 Water Street, Boston, MA 02109. A review of the PALM data base for the application confirms that the current correspondence address is EDWARDS & ANGELL, P.O. Box 9169, Boston MA, 02209. On August 27, 2003 the examiner mailed a Notice of Abandonment to applicants for failure to reply to the Office action. Applicants state that the Office action was never received and provide statements and docket record evidence of non-receipt in support thereof. Applicants also provide a copy of a submission of change of correspondence address submitted in paper and disk form dated December 5, 2002, three weeks prior to mailing of the last Office action. It is not known when this submission was received in the Office, however it was not entered in the Office's electronic data base until after the mailing of the Office action. It is noted that as early as September 5, 2001, applicants were using the new correspondence address above as their return mailing address on correspondence mailed to the Office (see reply to the restriction requirement mailed 9/05/01), but delayed more than a year before submitting it to the Office as the correspondence address for the above identified and hundreds of other applications. Applicants are required to keep the Office informed of their current correspondence address and to promptly inform the Office of any change of correspondence address. The delay of more than a year in submitting such change of correspondence address cannot be considered prompt. In view thereof, the Notice of Abandonment is not withdrawn and the application is not restored to a pending status.

Applicants' petition is **DENIED** for the reasons set forth above. Should there be any other facts not evident in applicants' submitted petition, they should be submitted in a renewed petition for

reconsideration. Applicants may also submit a petition under 37 CFR 1.137(b) requesting revival of the above identified application. Any new or renewed petition must be submitted within TWO MONTHS of the mailing date of this decision in order to be considered timely.

Should there be any questions regarding this decision, please contact William R. Dixon, Jr., by mail addressed to Director, Technology Center 1600, P.O. Box 1450, Alexandria, VA 22313-1450, or by telephone at (703) 308-3824 or by facsimile transmission at (703) 305-7230.

John Doll
Director, Technology Center 1600

UNITED STATES PATENT AND TRADEMARK OFFICE

COMMISSIONER FOR PATENTS
UNITED STATES PATENT AND TRADEMARK OFFICE
P.O. BOX 1450
ALEXANDRIA, VA 22313-1450
www.uspto.gov

Paper No. 18

Edwards & Angell
PO Box 9169
Boston, MA 02209

COPY MAILED

FEB 2 0 2004

OFFICE OF PETITIONS

In re Application of :
P. Zeitlin et al. :
Application No. 09/523,776 :
Filed: March 11, 2000 :
Attorney Docket No. 49632-71699 :

ON PETITION

This is a decision on the petition under 37 CFR 1.137(b), filed January 16, 2004, to revive the above-identified application.

The petition is GRANTED.

The above-identified application became abandoned for failure to reply within the meaning of 37 CFR 1.113 in a timely manner in reply to the final Office action mailed December 31, 2002, which set a shortened statutory period for reply of three months. No extensions of time under the provisions of 37 CFR 1.136 have been obtained. Accordingly, the application became abandoned on March 31, 2003.

The application file is being forwarded to Technology Center AU 1617 for processing the Request for CPA filed January 16, 2004, which is being treated as a Request for Continued Examination under 37 CFR 1.114.

Telephone inquiries regarding this decision should be directed to Latrice Bond at (703) 308-6911.

Latrice Bond

Latrice Bond
Paralegal Specialist
Office of Petitions
Office of the Deputy Commissioner
for Patent Examination Policy

UNITED STATES PATENT AND TRADEMARK OFFICE

Commissioner for Patents
United States Patent and Trademark Office
P.O. Box 1450
Alexandria, VA 22313-1450
www.uspto.gov

Rashida A. Karmali, PhD
99 Wall Street,
10th Floor
New York NY 10005

COPY MAILED

JUL 0 2 2008

OFFICE OF PETITIONS

In re Application of	:	
Karim Asani	:	
Application No.: 09/523789	:	ON PETITION
Filing or 371(c) Date: 03/13/2000	:	
Title of Invention:	:	
SYSTEM AND METHOD FOR	:	
SAFE FINANCIAL	:	
TRANSACTIONS IN E.COMMERCE	:	

This is a decision on the Petition for Revival of an Application for Patent Abandoned Unavoidably Under 37 C.F.R. § 1.137(a), filed May 12, 2008.

This Petition is hereby **dismissed**.

Any further petition must be submitted within TWO (2) MONTHS from the mail date of this decision. Extensions of time under 37 CFR 1.136(a) are permitted. The reconsideration request should include a cover letter entitled "Renewed Petition under [insert the applicable code section]." This is **not** final agency action within the meaning of 5 U.S.C. § 704.

Background

The above-identified application became abandoned for failure to timely and properly reply to the Notice of Allowance and Issue Fee Due, mailed February 4, 2008. The Notice set a non-extendable three (3) month period for reply. No reply having been received, the application became abandoned May 5, 2008.

Applicant files the instant petition and asserts that the delay was unavoidable because the Office action was not received until May 9, 2008. Applicant provides that the Office action was mailed to an incorrect correspondence address.

A Grantable Petition Under 37 CFR 1.137(a)

A grantable petition to revive an abandoned application under 37 CFR 1.137(a) must be accompanied by: **(1)** the required reply (unless previously filed), which may met by the filing of

a notice of appeal and the requisite fee; a continuing application; an amendment or request for reconsideration which *prima facie* places the application in condition for allowance, or a first or second submission under 37 CFR 1.129(a) if the application has been pending for at least two years as of June 8, 1995, taking into account any reference made in such application to any earlier filed application under 35 USC 120, 121 and 365(c); (**2**) the petition fee as set forth in 37 CFR 1.17(l); (**3**) a showing to the satisfaction of the Director that the entire delay in filing the required reply from the due date for the reply until the filing of a grantable petition pursuant to 37 CFR 1.137(a) was unavoidable; and (**4**) any terminal disclaimer (and fee as set forth in 37 CFR 1.20(d)) required pursuant to 37 CFR 1.137(c).

Applicant lacks item (**3**) as set forth above.

As to item (**3**), Applicant must provide a showing to the satisfaction of the Director that the entire delay in filing the required reply from the due date for the reply until the filing of a grantable petition pursuant to 37 CFR 1.137(a) was unavoidable. In order to determine whether the delay was unavoidable, the courts have adopted a "reasonably prudent person" standard. The courts have provided that:

> [t]he word 'unavoidable' . . . is applicable to ordinary human affairs, and requires no more or greater care or diligence than is generally used and observed by prudent and careful men in relation to their most important business. It permits them in the exercise of this care to rely upon the ordinary and trustworthy agencies of mail and telegraph, worthy and reliable employees, and such other means and instrumentalities as are usually employed in such important business. If unexpectedly, or through the unforeseen fault or imperfection of these agencies and instrumentalities, there occurs a failure, it may properly be said to be unavoidable, all other conditions of promptness in its rectification being present.

In re Mattullath, 38 App. D.C. 497, 514-15 (1912)(quoting Ex parte Pratt, 1887 Dec. Comm'r Pat. 31, 32-33 (1887)); see also Winkler v. Ladd, 221 F. Supp. 550, 552, 138 USPQ 666, 167-68 (D.D.C. 1963), aff'd, 143 USPQ 172 (D.C. Cir. 1963); Ex parte Henrich, 1913 Dec. Comm'r Pat. 139, 141 (1913). In addition, decisions on revival are made on a "case-by-case basis, taking all the facts and circumstances into account." Smith v. Mossinghoff, 671 F.2d 533, 538, 213 USPQ 977, 982 (D.C. Cir. 1982). Finally, a petition cannot be granted where a petitioner has failed to meet his or her burden of establishing that the delay was "unavoidable." Haines v. Quigg, 673 F. Supp. 314, 316-17, 5 USPQ2d 1130, 1131-32 (N.D. Ind. 1987).

"The critical phrase 'unless it be shown to the satisfaction of the Commissioner that such delay was unavoidable' has remained unchanged since first enacted in 1861." Smith v. Mossinghoff, 671 F.2d 533, 538, 213 U.S.P.Q. (BNA) 977 (D.C. Cir. 1982). The standard for "unavoidable" delay for reinstating a patent is the same as the unavoidable standard for reviving an application. See Ray v. Lehman, 55 F.3d 606, 608-609, 34 U.S.P.Q.2d (BNA) 1786, 1787 (Fed. Cir. 1995) (citing In re patent No. 4,409,763, 7 U.S.P.Q.2d (BNA) 1798, 1800 (Comm'r Pat. 1990; Smith v. Mossinghoff, 671 F.2d 533, 538, 213 U.S.P.Q. (BNA) 977 (D.C. Cir. 1982). The court in In re Mattullath, accepted the standard which had been proposed by Commissioner Hall which "requires no more or greater care or diligence than is generally used and observed by prudent and careful men in relation to their most important business." In re Mattullath, 38 App. D.C. 497,

514-515 (1912) (quoting Ex parte Pratt, 1887 Dec. Comm'r Pat. 31, 32-33 (1887)). However, "The question of whether an applicant's delay in prosecuting an application was unavoidable [will] be decided on a case-by-case basis, taking all of the facts and circumstances into account."[1] Nonawareness of the content of, or a misunderstanding of, PTO statutes, PTO rules, the MPEP, or Official Gazette notices, does not constitute unavoidable delay.[2]

The statute requires a "showing" by petitioner. Therefore, petitioner has the burden of proof. The decision will be based solely on the written, administrative record in existence. It is not enough that the delay was unavoidable; petitioner must prove that the delay was unavoidable. A petition will not be granted if petitioner provides insufficient evidence to "show" that the delay was unavoidable.

As to item **(3)**, a showing of non-receipt of an Office action may provide the basis for revival of an application based upon unavoidable delay.

The MPEP provides:

> The showing required to establish non-receipt of an Office communication must include a statement from the practitioner stating that the Office communication was not received by the practitioner and attesting to the fact that a search of the file jacket and docket records indicates that the Office communication was not received.
>
> A copy of the docket record where the non-received Office communication would have been entered had it been received and docketed must be attached to and referenced in practitioner's statement. For example, if a three month period for reply was set in the non-received Office action, a copy of the docket report showing all replies docketed for a date three months from the mail date of the non-received Office action must be submitted as documentary proof of non-receipt of the Office action.
>
> The showing outlined above may not be sufficient if there are circumstances that point to a conclusion that the Office action may have been lost after receipt rather than a conclusion that the Office action was lost in the mail (e.g., if the practitioner has a history of not receiving Office actions). (Emphasis supplied).

MPEP 711.03(c)

---

[1] Smith v. Mossinghoff, 671 F.2d 533, 538, 213 U.S.P.Q. (BNA) 977 (1982).

[2] See Smith v. Mossinghoff, 671 F.2d 533, 538, 213 U.S.P.Q. (BNA) 977 (Fed. Cir. 1982) (citing Potter v. Dann, 201 U.S.P.Q. (BNA) 574 (D. D.C. 1978) for the proposition that counsel's nonawareness of PTO rules does not constitute "unavoidable" delay)); Vincent v. Mossinghoff, 1985 U.S. Dist. LEXIS 23119, 13, 230 U.S.P.Q. (BNA) 621 (D. D.C. 1985) (Plaintiffs, through their counsel's actions, **or their own**, must be held responsible for having noted the MPEP section and Official Gazette notices expressly stating that the certified mailing procedures outlined in 37 CFR 1.8(a) do not apply to continuation applications.) (Emphasis added).

Analysis

A review of Office records reveals that the Notice was mailed to the correspondence address of record: 99 Wall Street, 13th Floor, New York, NY 10005. Office records do not indicate that a Change of Correspondence Address, changing the correspondence address to 99 Wall Street, 10th Floor, New York, NY 10005, was filed in this application prior to the filing of the Issue Fee Transmittal Form, filed with the present petition on May 12, 2008.

The MPEP states that "[w]here an attorney or agent of record (or applicant, if he or she is prosecuting the application pro se) changes his or her correspondence address, he or she is responsible for promptly notifying the U.S. Patent and Trademark Office of the new correspondence address (including ZIP Code). See 37 CFR 11.11. The notification should also include his or her telephone number. MPEP 601.03.

Applicant has failed to demonstrate that a timely Change of Correspondence Address was filed in this application. While the delay in filing a reply to the Notice may be found to have been unintentional, it cannot be said to have been unavoidable.

Alternate venue

If Applicant is unable to demonstrate the timely filing of a Change of Correspondence Address, Applicant is strongly urged to file a petition stating that the delay was unintentional. Public Law 97-247, § 3, 96 Stat. 317 (1982), which revised patent and trademark fees, amended 35 U.S.C. § 41(a)(7) to provide for the revival of an "unintentionally" abandoned application without a showing that the delay in was "unavoidable." An "unintentional" petition under 37 CFR 1.137(b) must be accompanied by the required fee.

The filing of a petition under 37 CFR 1.137(b) cannot be intentionally delayed and therefore must be filed promptly. A person seeking revival due to unintentional delay can not make a statement that the delay was unintentional unless the entire delay, including the delay from the date it was discovered that the application was abandoned until the filing of the petition to revive under 37 CFR 1.137(b), was unintentional. A statement that the delay was unintentional is not appropriate if petitioner intentionally delayed the filing of a petition for revive under 37 CFR 1.137(b).

Further correspondence with respect to this matter should be addressed as follows:

By mail: Director for Patents
PO Box 1450
Alexandria, VA 22313-1450

By FAX: (571) 273-8300
Attn: Office of Petitions

By hand: Customer Service Window
Randolph Building
401 Dulany Street
Alexandria, VA 22314

Telephone inquiries concerning this matter should be directed to the undersigned at (571) 272-3232.

Derek L. Woods
Attorney
Office of Petitions

UNITED STATES PATENT AND TRADEMARK OFFICE

Commissioner for Patents
United States Patent and Trademark Office
P.O. Box 1450
Alexandria, VA 22313-1450
www.uspto.gov

Rashida A. Karmali, PhD
99 Wall Street,
10th Floor
New York NY 10005

COPY MAILED

AUG 18 2008

OFFICE OF PETITIONS

In re Application of	:	
Karim Asani	:	
Application No.: 09/523789	:	ON PETITION
Filing or 371(c) Date: 03/13/2000	:	
Title of Invention:	:	
SYSTEM AND METHOD FOR	:	
SAFE FINANCIAL	:	
TRANSACTIONS IN E.COMMERCE	:	

This is a decision on the petition under the unintentional provisions of 37 CFR 1.137(b), filed July 9, 2008, to revive the above-identified application.

The petition is **GRANTED**.

This application became abandoned for failure to timely pay the issue and publication fees on or before May 4, 2008, as required by the Notice of Allowance and Fee(s) Due, mailed February 4, 2008. Accordingly, the date of abandonment of this application is May 5, 2008.

The petition satisfies the requirements of 37 CFR 1.137(b) in that petitioner has supplied (1) the reply in the form of payment of the issue fee (filed May 12, 2008); (2) the petition fee; and (3) a proper statement of unintentional delay.

Telephone inquiries concerning this matter should be directed to the undersigned at (571) 272-3232.

This application is being referred to the Office of Data Management for processing into a patent.

/Derek L. Woods/
Derek L. Woods
Attorney
Office of Petitions

UNITED STATES PATENT AND TRADEMARK OFFICE

COMMISSIONER FOR PATENTS
UNITED STATES PATENT AND TRADEMARK OFFICE
WASHINGTON, D.C. 20231
www.uspto.gov

Paper No. 11

WAGNER, MURABITO & HAO LLP
Two North Market Street
Third Floor
San Jose, CA 95113

COPY MAILED

OCT 0 4 2000

OFFICE OF PETITIONS
A/C PATENTS

In re Application of
Hadi Partovi et al.
Application No. 09/523,853
Filed: March 13, 2000
For: METHOD AND APPARATUS FOR CONTENT PERSONALIZATION OVER A TELEPHONE INTERFACE WITH ADAPTIVE VOICE CHARACTER

DECISION ACCORDING STATUS UNDER 37 CFR 1.47(a)

This is a decision on the petition under 37 CFR 1.47(a) filed June 22, 2000.

The petition is granted.

The application papers have been reviewed and found in compliance with 37 CFR 1.47(a). This application is hereby accorded Rule 1.47(a) status

As provided in Rule 1.47(a), this Office will forward notice of this application's filing date to non-signing inventor Zhe Li at his address given in the declaration. Notice of the filing of this application will also be published in the Official Gazette.

This application is being forwarded to Technology Center AU 2768.

Inquiries related to this decision may be addressed to Kien Nguyen at (703) 306-5592 or in his absence, the undersigned at (703) 305-1820.

Brian Hearn
Petitions Examiner
Office of Petitions
Office of the Deputy Commissioner
for Patent Examination Policy

Enclosure: Corrected Filing Receipt

UNITED STATES PATENT AND TRADEMARK OFFICE

COMMISSIONER FOR PATENTS
UNITED STATES PATENT AND TRADEMARK OFFICE
WASHINGTON, D.C. 20231
www.uspto.gov

ZHE LI
75 Poncetta Drive, #2
Daly City, CA 94015

COPY MAILED

OCT 0 4 2000

OFFICE OF PETITIONS
A/C PATENTS

In re Application of
Hadi Partovi et al.
Application No. 09/523,853
Filed: March 13, 2000
For: METHOD AND APPARATUS FOR CONTENT PERSONALIZATION OVER A TELEPHONE INTERFACE WITH ADAPTIVE VOICE CHARACTER

LETTER

Dear Mr. Li,

You are named as a joint inventor in the above-identified United States patent application, filed under the provisions of 35 U.S.C. 116 (United States Code), and 37 CFR 1.47(a), Rules of Practice in Patent Cases. Should a patent be granted on the application you will be designated therein as a joint inventor.

As a named inventor you are entitled to inspect any paper in the file wrapper of the application, order copies of all or any part thereof (at a prepaid cost per 37 CFR 1.19) or make your position of record in the application. Alternatively, you may arrange to do any of the preceding through a registered patent attorney or agent presenting written authorization from you. If you care to join the application, counsel of record (see below) would presumably assist you. Joining in the application would entail the filing of an appropriate oath or declaration by you pursuant to 37 CFR 1.63.

Inquiries related to this communication may be addressed to Kien Nguyen at (703) 306-5592 or in his absence, the undersigned at (703) 305-1820. Requests for information regarding your application should be directed to the File Information Unit at (703) 308-2733. Information regarding how to pay for and order a copy of the application, or a specific paper in the application, should be directed to Certification Division at (703) 308-9726 or 1 (800) 972-6382 (outside the Washington D.C. area).

Brian Hearn
Special Projects Examiner
Office of Petitions
Office of the Deputy Assistant Commissioner
for Patent Examination Policy

cc:
WAGNER, MURABITO & HAO LLP
Two North Market Street, Third Floor
San Jose, CA 95113

UNITED STATES PATENT AND TRADEMARK OFFICE

Commissioner for Patents
United States Patent and Trademark Office
P.O. Box 1450
Alexandria, VA 22313-1450
www.uspto.gov

PERKINS COIE LLP/MSFT
P. O. BOX 1247
SEATTLE, WA 98111-1247

MAILED

MAR 24 2010

OFFICE OF PETITIONS

In re Application of Partovi et al. :
Patent No. 7,571,226 :
Issued: August 4, 2009 : ON APPLICATION FOR
Application No. 09/523,853 : PATENT TERM ADJUSTMENT
Filed: March 13, 2000 :
Attorney Docket No. 418268640US8 :

This is in response to the "Application for Patent Term Adjustment Reconsideration Under 37 C.F.R. § 1.705(B)" filed October 5, 2009. Applicants request the determination of patent term adjustment on the Determination of Patent Term Adjustment under 35 U.S.C. 154(b) mailed with the first Notice of Allowance be increased from zero (0) days to one hundred sixty (160) days.

The request is **DISMISSED**.

The request states, "Applicant requests reconsideration of the patent term adjustment indicated in the Notice of Allowance of May 4, 2009." Pursuant to 37 C.F.R. § 1.705(b), any request for reconsideration of the patent term adjustment in the notice of allowance "must be filed no later than the payment of the issue fee." The issue fee was paid June 4, 2009, and the instant request was filed October 5, 2009. Therefore, the request is untimely and must be dismissed.

37 C.F.R. § 1.705(b) states, "An application for patent term adjustment under this section must be accompanied by ... [t]he fee set forth in § 1.18(e). Neither the fee under 37 C.F.R. § 1.18(e) nor a general authorization to charge any required fees accompanied the instant application for patent term adjustment. As a result of applicants' failure to submit the required fee, the instant request must be dismissed.

Pursuant to 37 C.F.R. § 1.702(f), the provisions of 37 C.F.R. §§ 1.703-1.705 only apply to original applications, other than designs, filed on or after May 29, 2000. The instant application was filed March 13, 2000.[1] Therefore, the provisions of 37 C.F.R. §§ 1.703-1.705 are inapplicable and the instant request under 37 C.F.R. § 1.705(b) must be dismissed.

[1] The Patent Term Guarantee Act of 1999 amended 35 U.S.C. § 154 to include § 154(b), which provides for adjustment of patent term due to examination delay for original applications, other than designs, filed on or after May 29, 2000.

Telephone inquiries specific to this decision should be directed to Senior Petitions Attorney Steven Brantley at (571) 272-3203.

Anthony Knight
Supervisor
Office of Petitions

UNITED STATES PATENT AND TRADEMARK OFFICE

UNITED STATES DEPARTMENT OF COMMERCE
United States Patent and Trademark Office
Address: COMMISSIONER FOR PATENTS
P.O. Box 1450
Alexandria, Virginia 22313-1450
www.uspto.gov

PERKINS COIE LLP/MSFT
P. O. BOX 1247
SEATTLE, WA 98111-1247

Mail Date: 04/22/2010

Applicant	: Hadi Partovi	: DECISION ON REQUEST FOR
Patent Number	: 7571226	: RECALCULATION of PATENT
Issue Date	: 08/04/2009	: TERM ADJUSTMENT IN VIEW
Appliction No	: 09/523,853	: OF WYETH
Filed	: 03/13/2000	:
		:

The Patentee's Request for Recalculation is **DISMISSED.**

This Request is deemed ineligible for consideration for one or more of the following reasons:

(A). The patent for which PTA recalculation is requested is either a design or reissue application or is a reexamination proceeding;

(B). The patent for which PTA recalculation is requested resulted from a utility or plant application filed under 35 USC 111(a) before May 29, 2000 and no CPA filed in the application on/after May 29, 2000;

(C). The patent for which PTA recalculation is requested resulted from an international application in which the international filing date was before May 29, 2000 and no CPA filed in the application on/after May 29, 2000;

(D). The patent for which PTA recalculation is requested issued on/after March 2, 2010;

(E). The Request for Recalculation was filed more than 180 days after the grant date of the patent and the request was not filed within two months of a dismissal of a request for reconsideration of the of the patent term under 37 CFR 1.705(d);

(F). The Request for Recalculation is not solely limited to USPTO pre-Wyeth interpretation of 35 U.S.C. 154(b)(2)(A);

or

(G). A civil action was filed pursuant to 35 U.S.C. 154(b)(4)(A)concerning the same patent at issue in this request.

Patentee may file a reply to this decision dismissing the Request for Recalculation. Patentee must file such reply within one month or thirty days, whichever is longer, of the mail date of the decision dismissing the Request for Recalculation. No fee is required if patentee is asserting in the reply that the dismissal for ineligibility is improper.

Patentee should use document code PET.OP if electronically filing a reply to this dismissal. If the USPTO finds that the request was improperly deemed ineligible, the USPTO will mail applicant a recalculation determination.

Patentee should be aware that in order to preserve the right to review in the United States District Court for the District of Columbia of the USPTO patent term adjustment determination, patentee must ensure that he or she also take the steps required under 35 U.S.C. 154(b)(4)(A). Nothing in the request for recalculation should be construed as providing an alternative time frame for commencing a civil action under 35 U.S.C. 154 (b)(4)(A).

Any questions concerning this decision should be directed to the Office of Patent Legal Administration at 571-272-7702.

UNITED STATES PATENT AND TRADEMARK OFFICE

COMMISSIONER FOR PATENTS
UNITED STATES PATENT AND TRADEMARK OFFICE
P.O. BOX 1450
ALEXANDRIA, VA 22313-1450
www.uspto.gov

MAR 31 2004

Fish & Richardson PC
225 Franklin St.
Boston, MA 02110

Paper No. 24

In re Application of Robert E. Burrell et al Serial No. : 09/524,027 Filed : March 13, 2000 For : Transcutaneous Medical Device Dressings and Method of Use	: DECISION ON PETITION : TO WITHDRAW : HOLDING OF : ABANDONMENT

This is a decision on petitioner's request filed under 37 CFR 1.137(b) on August 7, 2003, which request is being treated as a request under 37 CFR 1.181 to review the holding of abandonment mailed July 23, 2003 for failure to pay the issue fee as required in the Notice of Allowance and Fee(s) Due mailed March 24, 2003. There is no fee required for this petition.

In support of the request, petitioner states that on April 15, 2003 a Request for Continued Examination (RCE) was filed. Requester indicates that the request for an RCE included the appropriate fees and requested that an IDS previously mailed on March 27, 2003 be considered as the submission required under 37 CFR 1.114. Although petitioner does not submit an appropriate showing under 37 CFR 1.8 or a PTO stamped receipt, to show timely filing of the RCE request, it is not necessary as the IDS mailed March 27, 2003 was received April 1, 2003 and the RCE request was received, timely, April 21, 2003 (certificate of mailing dated April 15, 2003).

In view of the above, the holding of abandonment is withdrawn. Upon the mailing of this decision, the application will be forwarded to the Examiner via the Legal Instruments Examiner for entry and consideration of (1) the IDS received April 1, 2003, (2) the RCE request received April 21, 2003, and (3) the IDS received May 6, 2003.

Summary: Holding of Abandonment Withdrawn.

John E. Kittle, Director
Groups 3730 and 3760
Phone: (703) 308-0873

ak/3/13/04

UNITED STATES PATENT AND TRADEMARK OFFICE

COMMISSIONER FOR PATENTS
UNITED STATES PATENT AND TRADEMARK OFFICE
P.O. BOX 1450
ALEXANDRIA, VA 22313-1450
www.uspto.gov

Paper No. 17

HAMILTON, BROOK, SMITH & REYNOLDS, P.C.
530 VIRGINIA ROAD
P.O. BOX 9133
CONCORD MA 01742-9133

MAIL

DEC 1 0 2003

DIRECTOR OFFICE
TECHNOLOGY CENTER 2600

In re Application of	:	
Derek Mahoney, et al.	:	
Application No. 09/524,040	:	DECISION ON PETITION
Filed: March 13, 2000	:	TO MAKE SPECIAL
For: ONE-SIZE-FITS-ALL UNI-EAR HEARING INSTRUMENT	:	

This is a decision on the petition to make special filed November 3, 2003 under MPEP §708.02 (IV), applicant's age.

A petition to make special under MPEP §708.02, IV, must show that petitioner is 65 years of age, or more. Acceptable evidence includes a birth certificate, copy of a driver's license, or simply a statement by the applicant. No fee is required.

The petition includes a copy of a statement from inventor Marvin Leedham averring that he is over 65 years of age.

Accordingly, the petition is **GRANTED**.

The application will retain its special status throughout its entire prosecution, including any appeal to the Board of Patent Appeals and Interferences, subject only to diligent prosecution by the applicant.

The application is being forwarded to the examiner for expedited prosecution.

Krista Zele
Special Program Examiner
Technology Center 2600
Communications
(703) 305-4701

OIPE JC80
JUL 1 0 2000
PATENT & TRADEMARK OFFICE

IN THE UNITED STATES PATENT AND TRADEMARK OFFICE

In re Patent Application of Buchman et al.	Group Art Unit: 1646
Serial No.: 09/524,101	Examiner: Not Yet Assigned
Filed: March 13, 2000	
For: Insect p53 Tumor Suppressor Genes and Proteins	Attorney Docket No.: EX00-015

RESPONSE TO NOTICE TO FILE MISSING PARTS OF NONPROVISIONAL APPLICATION

Assistant Commissioner for Patents
Office of Initial Patent Examination's Customer Service Center
Washington, D.C. 20231

Sir:

In response to the Notice to File Missing Parts of Nonprovisional Application mailed May 23, 2000, the follow documents are enclosed:

- Copy of Notice to File Missing Parts
- Fee Transmittal Form (1 Page)
- Statement Claiming Small Entity Status (1 Page)
- Signed Declaration (5 Pages)

Respectfully submitted,

Dated: July 5, 2000

Jan P. Brunelle Reg. No. 35,081

EXELIXIS, INC.
170 Harbor Way, P.O. Box 511
South San Francisco, California 94083-0511
Telephone: (650) 837-8180
Facsimile: (650) 837-8234

FORMALITIES LETTER

OC000000005135679

OIPE JC80 JUL 10 2000 PATENT & TRADEMARK OFFICE

UNITED STATES DEPARTMENT OF COMMERCE
Patent and Trademark Office
Address: COMMISSIONER OF PATENT AND TRADEMARKS
Washington, D.C. 20231

APPLICATION NUMBER	FILING/RECEIPT DATE	FIRST NAMED APPLICANT	ATTORNEY DOCKET NUMBER
09/524,101	03/13/2000	Andrew Roy Buchman	EX00-015

23500
JAN P BRUNELLE
EXELIXIS PHARMACEUTICALS, INC
280 E GRAND AVENUE
SOUTH SAN FRANCISCO, CA 94080

Date Mailed: 05/23/2000

NOTICE TO FILE MISSING PARTS OF NONPROVISIONAL APPLICATION

FILED UNDER 37 CFR 1.53(b)

Filing Date Granted

An application number and filing date have been accorded to this application. The item(s) indicated below, however, are missing. Applicant is given TWO MONTHS from the date of this Notice within which to file all required items and pay any fees required below to avoid abandonment. Extensions of time may be obtained by filing a petition accompanied by the extension fee under the provisions of 37 CFR 1.136(a).

- The statutory basic filing fee is missing.
  Applicant must submit **$ 690** *to complete the basic filing fee and/or file a small entity statement claiming such status (37 CFR 1.27).*
- Total additional claim fee(s) for this application is $222.
  - **$144** for **8** total claims over 20.
  - **$78** for **1** independent claims over 3 .
- The oath or declaration is unsigned.
- To avoid abandonment, a late filing fee or oath or declaration surcharge as set forth in 37 CFR 1.16(e) of $130 for a non-small entity, must be submitted with the missing items identified in this letter.
- **The balance due by applicant is $ 1042.**

A copy of this notice MUST be returned with the reply.

M. Middleton
Customer Service Center
Initial Patent Examination Division (703) 308-1202

PART 2 - COPY TO BE RETURNED WITH RESPONSE

07/14/2000 GTEFFERA 00000109 501108 09524101

01 FC:201	345.00	CH
02 FC:203	72.00	CH
03 FC:202	39.00	CH
04 FC:205	65.00	CH

SECTOR

JUL 1 0 2000 PATENT & TRADEMARK OFFICE

Please type a plus sign (+) inside this box-> [+]

PTO/SB/21 (6-98)
Approved for use through 09/30/2000. OMB 0651-0031
Patent and Trademark Office: U.S. DEPARTMENT OF COMMERCE

Under the Paperwork Reduction Act of 1995, no persons are required to respond to a collection of information unless it displays a valid OMB control number.

TRANSMITTAL FORM

(to be used for all correspondence after initial filing)

Application Number	09/524,101
Filing Date	03/13/2000
First Named Inventor	Andrew Roy Buchman
Group Art Unit	1646
Examiner Name	Not yet assigned
Total Number of Pages in This Submission: 23	Attorney Docket Number: EX00-015

ENCLOSURES *(check all that apply)*

- [X] Fee Transmittal Form
  - [ ] Fee Attached
- [ ] Amendment / Response
  - [ ] After Final
  - [ ] Affidavits/declaration(s)
- [ ] Extension of Time Request
- [ ] Express Abandonment Request
- [ ] Information Disclosure Statement
- [ ] Certified Copy of Priority Document(s)
- [ ] Response to Missing Parts/ Incomplete Application
  - [X] Response to Missing Parts under 37 C.F.R. 1.52 or 1.53
- [X] Assignment Papers *(for an Application)*
- [ ] Drawing(s)
- [ ] Licensing-related Papers
- [ ] Petition Routing Slip (PTO/SB/69) and Accompanying Petition
- [ ] Petition to Convert to a Provisional Application
- [ ] Power of Attorney, Revocation Change of Correspondence Address
- [ ] Terminal Disclaimer
- [X] Small Entity Statement
- [ ] Request for Refund
- [ ] After Allowance Communication to Group
- [ ] Appeal Communication to Board of Appeals and Interferences
- [ ] Appeal Communication to Group *(Appeal Notice, Brief, Reply Brief)*
- [ ] Proprietary Information
- [ ] Status Letter
- [X] Additional Enclosure(s) *(please identify below):*

*Request for Corrected Filing Receipt

Remarks

SIGNATURE OF APPLICANT, ATTORNEY, OR AGENT

Firm or Individual name	Jan P. Brunelle EXELIXIS, INC.
Signature	Jan P. Brunelle
Date	July 5, 2000

CERTIFICATE OF MAILING

I hereby certify that this correspondence is being deposited with the United States Postal Service as first class mail in an envelope addressed to: Assistant Commissioner for Patents, Washington, D.C. 20231 on this date: July 5, 2000

Typed or printed name	Shannon Dougherty		
Signature	Shannon Dougherty	Date	7/5/00

Burden Hour Statement This form is estimated to take 0.2 hours to complete. Time will vary depending upon the needs of the individual case. Any comments on the amount of time you are required to complete this form should be send to the Chief Information Officer, Patent and Trademark Office, Washington, DC 20231. DO NOT SEND FEES OR COMPLETED FORMS TO THIS ADDRESS. SEND TO: Assistant Commissioner for Patents, Washington, DC 20231.

OIPE JC80
JUL 1 0 2000
PATENT & TRADEMARK OFFICE

PTO/SB/17 (12/99)
Approved for use through 09/30/2000. OMB 0651-0032
Patent and Trademark Office: U.S. DEPARTMENT OF COMMERCE

Under the Paperwork Reduction Act of 1995, no persons are required to respond to a collection of information unless it displays a valid OMB control number.

FEE TRANSMITTAL for FY 2000

Patent fees are subject to annual revision.
Small Entity payments must, be supported by a small entity statement, otherwise large entity fees must be paid. See Forms PTO/SB/09-72.
See 37 *C.F.R.* §§ 7.27 *and* 1.28.

TOTAL AMOUNT OF PAYMENT ($) 561.00

Complete if Known	
Application Number	09/524,101
Filing Date	03/13/2000
First Named Inventor	BUCHMAN, Andrew Roy
Examiner Name	
Group /Art Unit	1646
Attorney Docket No.	EX00-015

METHOD OF PAYMENT (check one)

1. ☒ The Commissioner is hereby authorized to charge indicated fees and credit any overpayments to:

Deposit Account Number: 50-1108

Deposit Account Name: Exelixis, Inc..

☒ Charge Any Additional Fee Required Under 37 CFR §§ 1.16 and 1.17

2. ☐ Payment Enclosed: ☐ Check ☐ Money Order ☐ Other

FEE CALCULATION

1. BASIC FILING FEE

Large Entity Fee Code ($)	Small Entity Fee Code ($)	Fee Description	Fee Paid
101	690	201 345 Utility filing fee	345.00
106	310	206 155 Design filing fee	
107	480	207 240 Plant filing fee	
108	690	208 345 Reissue filing fee	
114	150	214 75 Provisional filing fee	

SUBTOTAL(I) ($)345.00

2. EXTRA CLAIM FEES

		Extra Claims		Fee from below	Fee Paid
Total Claims	28 -20- =	8	x	9.00	= 72.00
Independent Claims	4 - 3- =	1	x	39.00	= 39.00
Multiple Dependent					=

**or number previously paid, if greater; For Reissues, see below

Large Entity Fee Code ($)	Small Entity Fee Code ($)	Fee Description
103	18	203 9 Claims in excess of 20
102	78	202 39 Independent claims in excess of 3
104	260	204 130 Multiple dependent claim, if not paid
109	78	209 39 ** Reissue independent claims over original patent
110	18	210 9 ** Reissue claims in excess of 20 and over original patent

SUBTOTAL (2) ($) 111.00

FEE CALCULATION (continued)

3. ADDITIONAL FEES

Large Entity Fee Code ($)	Small Entity Fee Code ($)	Fee Description	Fee Paid
105	130	205 65 Surcharge - late filing fee or oath	65.00
127	50	227 25 Surcharge - late provisional filing fee or cover sheet.	
139	130	139 130 Non-English specification	
147	2,520	147 2,520 For filing a request for reexamination	
112	920*	1 12 920* Requesting publication of SIR prior to Examiner action	
11 3	1,840*	11 3 1,840* Requesting publication of SIR after Examiner action	
115	110	215 55 Extension for reply within first month	
116	380	216 190 Extension for reply within second month	
117	870	217 435 Extension for reply within third month	
118	1,360	218 680 Extension for reply within fourth month	
128	1,850	228 925 Extension for reply within fifth month	
119	300	219 150 Notice of Appeal	
120	300	220 150 Filing a brief in support of an appeal	
121	260	221 130 Request for oral hearing	
138	1,510	138 1,510 Petition to institute a public use proceeding	
140	110	240 55 Petition to revive - unavoidable	
141	1,210	241 605 Petition to revive - unintentional	
142	1,210	242 605 Utility issue fee (or reissue)	
143	430	243 215 Design issue fee	
144	580	244 290 Plant issue fee	
122	130	122 130 Petitions to the Commissioner	
123	50	123 50 Petitions related to provisional applications	
126	240	126 240 Submission of Information Disclosure Stmt	
581	40	581 40 Recording each patent assignment per property (times number of properties)	40.00
146	690	246 345 Filing a submission after final rejection (37 CFR § 1.129(a))	
149	690	249 345 For each additional invention to be examined (37 CFR § 1.129(b))	
Other fee (specify)			
Other fee (specify)			

Reduced by Basic Filing Fee Paid SUBTOTAL (3) ($) 105.00

SUBMITTED BY				Complete (if applicable)	
Name (Print/Type)	Jan P. Brunelle	Registration No. (Attorney/Agent)	35,081	Telephone	650-553-8180
Signature	Jan P. Brunelle			Date	July 5, 2000

WARNING:

Information on this form may become public. Credit card information should not be included on this form. Provide credit card information and authorization on PTO-2038.

Burden Hour Statement This form is estimated to take 0.2 hours to complete. Time will vary depending upon the needs of the individual case. Any comments on the amount of time you are required to complete this form should be sent to the Chief Information Officer, Patent and Trademark Office Washington, DC 20231. DO NOT SEND FEES OR COMPLETED FORMS TO THIS ADDRESS. SEND TO: Assistant Commissioner for Patents, Washington, D.C. 20231.

OIPE JC134
AUG 1 3 2001
PATENT & TRADEMARK OFFICE

RECEIVED
AUG 2 0 2001
TECH CENTER 1600/2900

IN THE UNITED STATES PATENT AND TRADEMARK OFFICE

In re Application of Buchman et al	Group Art Unit: 1646
Serial No.: 09/524,101	Examiner: Bharati R. Dhruva
Filed: March 13, 2000	Attorney Docket No: EX00-015C
For: Insect p53 Tumor Suppressor Genes and Proteins	

RESPONSE TO NOTICE TO COMPLY

Assistant Commissioner of Patents
Washington, D.C. 20231

Dear Examiner Dhruva:

In response to the Notice to Comply mailed June 20, 2001 and in adherence with 37 CFR 1.821-1825, this response is accompanied by a diskette containing SEQ ID NOS 01-22 in computer readable form and a paper copy of the sequence information. The computer readable Sequence Listing was prepared through the use of the software program "PatentIn" provided by the Patent and Trademark Office. The sequence information recorded in computer readable form is identical to that of the written Sequence Listing submitted and introduces no new matter.

Respectfully submitted,

Dated: August 9, 2001

Laleh Shayesteh For Reg. No. 47,937

Jan P. Brunelle Reg. No. 35,081

EXELIXIS, INC.
170 Harbor Way
P.O. Box 511
South San Francisco, California 94083-0511
Telephone: (650) 837-8180
Facsimile: (650) 837-8234

1646 $

Please type a plus sign (+) inside this box → [+]

PTO/SB/21 (08-00)
Approved for use through 10/31/2002. OMB 0651-0031
U.S. Patent and Trademark Office: U.S. DEPARTMENT OF COMMERCE
Under the Paperwork Reduction Act of 1995, no persons are required to respond to a collection of information unless it displays a valid OMB control number.

Box SEQ

OIPE AUG 1 3 2001 PATENT & TRADEMARK OFFICE

TRANSMITTAL FORM

(To be used for all correspondence after initial filing)

Application Number	09/524,101
Filing Date	March 13, 2001
First Named Inventor	Buchman
Group Art Unit	1646
Examiner Name	Bharati R. Dhruva
Attorney Docket Number	EX00-015C

Total Number of Pages in This Submission: 4

RECEIVED AUG 2 0 2001 TECH CENTER 1600/2900

ENCLOSURES *(check all that apply)*

- [x] Fee Transmittal Form
  - [ ] Fee Attached
- [x] Amendment / Response
  - [ ] After Final
  - [ ] Affidavits/declaration(s)
- [x] Extension of Time Request
- [ ] Express Abandonment Request
- [ ] Information Disclosure Statement
- [ ] Certified Copy of Priority Document(s)
- [ ] Response to Missing Parts/ Incomplete Application
  - [ ] Response to Missing Parts under 37 CFR 1.52 or 1.53
- [ ] Assignment Papers *(for an Application)*
- [ ] Drawing(s)
- [ ] Licensing-related Papers
- [ ] Petition
- [ ] Petition to Convert to a Provisional Application
- [ ] Power of Attorney, Revocation Change of Correspondence Address
- [ ] Terminal Disclaimer
- [ ] Request for Refund
- [ ] CD, Number of CD(s) ____
- [ ] After Allowance Communication to Group
- [ ] Appeal Communication to Board of Appeals and Interferences
- [ ] Appeal Communication to Group *(Appeal Notice, Brief, Reply Brief)*
- [ ] Proprietary Information
- [ ] Status Letter
- [x] Other Enclosure(s) *(please identify below)*: **return receipt postcard**

Remarks

SIGNATURE OF APPLICANT, ATTORNEY, OR AGENT

Firm *or* Individual name	Laleh Shayesteh FOR Jan P. Brunelle
Signature	
Date	August 9, 2001

CERTIFICATE OF MAILING

I hereby certify that this correspondence is being deposited with the United States Postal Service as first class mail in an envelope addressed to: Assistant Commissioner for Patents, Washington, D.C. 20231 on this date: August 9, 2001

Typed or printed name	Shannon Dougherty		
Signature	Shannon Dougherty	Date	August 9, 2001

Burden Hour Statement: This form is estimated to take 0.2 hours to complete. Time will vary depending upon the needs of the individual case. Any comments on the amount of time you are required to complete this form should be send to the Chief Information Officer, U.S. Patent and Trademark Office, Washington, DC 20231. DO NOT SEND FEES OR COMPLETED FORMS TO THIS ADDRESS. SEND TO: Assistant Commissioner for Patents, Washington, DC 20231.

PTO/SB/17 (11-00)
Approved for use through 10/31/2002. OMB 0651-0032
U.S. Patent and Trademark Office; U.S. DEPARTMENT OF COMMERCE

#8 PP 10-9-01

Under the Paperwork Reduction Act of 1995, no persons are required to respond to a collection of information unless it displays a valid OMB control number.

FEE TRANSMITTAL for FY 2001

Patent fees are subject to annual revision.

OIPE JC184 AUG 1 3 2001 PATENT & TRADEMARK OFFICE

RECEIVED AUG 2 0 2001 TECH CENTER 1600/2900

TOTAL AMOUNT OF PAYMENT ($) 55

Complete if Known	
Application Number	09/524,101
Filing Date	March 13, 2001
First Named Inventor	Buchman
Examiner Name	Bharati R. Dhruva
Group / Art Unit	1646
Attorney Docket No.	EX00-015C

METHOD OF PAYMENT (check one)

1. ☒ The Commissioner is hereby authorized to charge indicated fees and credit any over payments to:

Deposit Account Number: 50-1108

Deposit Account Name: Exelixis, Inc.

☒ Charge Any Additional Fee Required Under 37 CFR 1.16 and 1.17

☒ Applicant claims small entity status. See 37 CFR 1.27

2. ☐ Payment Enclosed:

☐ Check ☐ Credit card ☐ Money Order ☐ Other

FEE CALCULATION

1. BASIC FILING FEE

Large Entity Fee Code	Large Entity Fee ($)	Small Entity Fee Code	Small Entity Fee ($)	Fee Description	Fee Paid
101	710	201	355	Utility filing fee	
106	320	206	160	Design filing fee	
107	490	207	245	Plant filing fee	
108	710	208	355	Reissue filing fee	
114	150	214	75	Provisional filling fee	

SUBTOTAL (1) ($) 0

2. EXTRA CLAIM FEES

			Extra Claims		Fee from below		Fee Paid
Total Claims		-20	= 0	X		=	0
Independent Claims		-3	= 0	X		=	0
Multiple Dependent				X		=	0

Large Entity Fee Code	Large Entity Fee ($)	Small Entity Fee Code	Small Entity Fee ($)	Fee Description
103	18	203	9	Claims in excess of 20
102	80	202	40	Independent claims in excess of 3
104	270	204	135	Multiple dependent claim, if not paid
109	80	209	40	** Reissue independent claims over original patent
110	18	210	9	** Reissue claims in excess of 20 and over original patent

SUBTOTAL (2) ($) 0

**or number previously paid, if greater; For Reissues, see above

FEE CALCULATION (continued)

3. ADDITIONAL FEES

Large Entity Fee Code	Large Entity Fee ($)	Small Entity Fee Code	Small Entity Fee ($)	Fee Description	Fee Paid
105	130	205	65	Surcharge - late filing fee or oath	
127	50	227	25	Surcharge - late provisional filing fee or cover sheet.	
139	130	139	130	Non-English specification	
147	2,520	147	2,520	For filing a request for reexamination	
112	920*	112	920*	Requesting publication of SIR prior to Examiner action	
113	1,840*	113	1,840*	Requesting publication of SIR after Examiner action	
115	110	215	55	Extension for reply within first month	55
116	390	216	195	Extension for reply within second month	
117	890	217	445	Extension for reply within third month	
118	1,390	218	695	Extension for reply within fourth month	
128	1,890	228	945	Extension for reply within fifth month	
119	310	219	155	Notice of Appeal	
120	310	220	155	Filing a brief in support of an appeal	
121	270	221	135	Request for oral hearing	
138	1,510	138	1,510	Petition to institute a public use proceeding	
140	110	240	55	Petition to revive – unavoidable	
141	1,240	241	620	Petition to revive – unintentional	
142	1,240	242	620	Utility issue fee (or reissue)	
143	440	243	220	Design issue fee	
144	600	244	300	Plant issue fee	
122	130	122	130	Petitions to the Commissioner	
123	130	123	130	Petitions related to provisional applications	
126	180	126	180	Submission of Information Disclosure Stmt	
581	40	581	40	Recording each patent assignment per property (times number of properties)	
146	710	246	355	Filing a submission after final rejection (37 CFR § 1.129(a))	
149	710	249	355	For each additional invention to be examined (37 CFR § 1.129(b))	
179	710	279	355	Request for Continued Examination (RCE)	
169	900	169	900	Request for expedited examination of a design application	

08/15/2001 TEDAMHU 00000021 501108 09524101
01 FC:215 55.00 CH

Other fee (specify) ____

*Reduced by Basic Filing Fee Paid SUBTOTAL (3) ($) 55

SUBMITTED BY				Complete (if applicable)	
Name (Print/Type)	Lateh Shayegh for Jan P. Brunelle	Registration No. Attorney/Agent)	47,937 35,081	Telephone	650-837-8180
Signature				Date	August 9, 2001

WARNING: Information on this form may become public. Credit card information should not be included on this form. Provide credit card information and authorization on PTO-2038.

Burden Hour Statement: This form is estimated to take 0.2 hours to complete. Time will vary depending upon the needs of the individual case. Any comments on the amount of time you are required to complete this form should be sent to the Chief Information Officer, U.S. Patent and Trademark Office, Washington, DC 20231. DO NOT SEND FEES OR COMPLETED FORMS TO THIS ADDRESS. SEND TO: Assistant Commissioner for Patents, Washington, DC 20231.

Commissioner for Patents
United States Patent and Trademark Office
Washington, D.C. 20231
www.uspto.gov

WILLIAM E JOHNSON JR
THE MATTHES FIRM
1900 WEST LOOP SOUTH
SUITE 1800
HOUSTON , TX 77027

COPY MAILED

OCT 0 3 2000

OFFICE OF PETITIONS
A/C PATENTS

In re Application of
MUSSLEWHITE, JEFFREY D., *et al.*
Application No. 09/524,117
Filed: July 12, 2000
Attorney Docket No. DLY-14

DECISION ON PETITION

This is a decision on the petition filed on July 12, 2000, requesting that the above-identified application be accorded a filing date of March 13, 2000.

Petitioner attempted to file the application on March 13, 2000. However, on June 21, 2000, the Office of Initial Patent Examination mailed a "Notice Of Incomplete Nonprovisional Application" requiring drawings and a completed declaration covering said drawings. Petitioner then filed this July 12, 2000 petition under 37 C.F.R. §1.181 to accord the application the filing date of the date of original receipt, March 13, 2000. This petition was accompanied by the $130.00 petition fee, a copies of two sheets of informal drawings, the affidavit of patent attorney William Johnson, Jr., and appendices that include a copy of the cover/transmittal letter with the Express Mail number indicating transmittal of a complete application, including the two sheets of drawings.

Petitioner's support for this petition, the cover letter for the application, does not clearly indicate USPTO receipt of the drawings. This evidence was prepared before deposit and therefore does not preclude the possibility that the drawings were not received, despite Petitioner's intent to include them. Appropriate proof of USPTO receipt of the drawings would be a post card return receipt indicating that the USPTO received the drawings.

Given the above, it is concluded that the USPTO did not receive the drawings in question on March 13, 2000. Therefore, with regard to the petition requesting a filing date of March 13, 2000, *the petition is* ***dismissed***.

However, given that the USPTO now has a copy of the drawings, enough material has been received by the USPTO to satisfy the requirements for receiving a filing date under 37 C.F.R. §1.53(b). Therefore, this application is given the filing date of receipt of all of the requisite parts, which fell on July 12, 2000.

This petition still lacks a declaration that references the drawings received on July 12, 2000. Therefore, Applicant still has not filed a complete response to the June 21, 2000 notice of incomplete nonprovisional application. Applicant is hereby given TWO MONTHS to file such a declaration. If an appropriate response is not given within that time frame, this application will be considered abandoned. Extensions of time are obtainable by filing a petition accompanied by the extension fee under the provisions of 37 C.F.R. 1.136(a).

Any request for reconsideration of this decision regarding the filing date must be submitted within TWO (2) MONTHS from the mail date of this decision. The reconsideration request should include a cover letter entitled "Renewed Petition under 37 C.F.R. §1.53(b)".

Further correspondence with respect to this matter should be addressed as follows:

By mail: Assistant Commissioner for Patents
Box DAC
Washington, D.C. 20231

By FAX: (703) 308-6916
Attn: Office of Petitions

By hand: Office of Petitions
Four Crystal Plaza, Suite 3C23
2201 South Clark Place
Arlington, VA 22202

Telephone inquiries concerning this matter may be directed to Petitions Attorney Scott M. Ledford in the Office of Petitions at (703) 306-5593.

Beverly M. Flanagan
Supervisory Petitions Examiner
Office of Petitions
Office of the Deputy Commissioner
for Patent Examination Policy

Enclosures: Filing Receipt
Notice to File Missing Parts of NonProvisional Application

UNITED STATES PATENT AND TRADEMARK OFFICE

Commissioner for Patents
United States Patent and Trademark Office
Washington, D.C. 20231
www.uspto.gov

Paper No. 8

COPY MAILED

FEB 23 2001

OFFICE OF PETITIONS
A/C PATENTS

WILLIAM E JOHNSON JR
THE MATTHES FIRM
1900 WEST LOOP SOUTH
SUITE 1800
HOUSTON , TX 77027

In re Application of:
MUSSLEWHITE, JEFFREY D., et al.
Application No. 09/524,117
Filed: 03/13/2000
Attorney Docket No. DLY-14

DECISION GRANTING PETITION

This is a decision on the renewed petition under 37 C.F.R. §1.10(c), filed on October 25, 2000, requesting that the above-identified application be accorded a filing date of March 13, 2000, rather than the presently accorded filing date of July 12, 2000.[1]

Petitioner alleges that the application was deposited in Express Mail service on March 13, 2000. In support, the petition is accompanied by a copy of Express Mail receipt no. EH906694591US showing a "date in" of March 13, 2000 and a copy of the certificate of mailing used with this application that shows a matching Express Mail label number.[2]

In view of the above, *this petition is* ***granted***.

This application will be returned to Initial Patent Examination Division for correction of the filing date to March 13, 2000.

Telephone inquiries concerning this matter may be directed to Petitions Attorney Scott M. Ledford in the Office of Petitions at (703) 306-5593.

Beverly Flanagan
Supervisory Petitions Examiner
Office of Petitions
Office of the Deputy Assistant Commissioner
for Patent Examination Policy

---

[1] Although Petitioner requests relief under 37 C.F.R. §1.181, the evidence is better tailored toward relief under 37 C.F.R. §1.10(c). Therefore, this decision treats the petition accordingly.

[2] Petitioner also included the application cover sheet, which indicates an Express Mail label number of EH9066945591US. The discrepancy between this number and the one given on the certificate of mailing and on the Express Mail label itself is presumed to be a typographical error. If this is an incorrect presumption, Petitioner must immediately notify the office. See, M.P.E.P. 2000

UNITED STATES PATENT AND TRADEMARK OFFICE

#17

UNDER SECRETARY OF COMMERCE FOR INTELLECTUAL PROPERTY AND
DIRECTOR OF THE UNITED STATES PATENT AND TRADEMARK OFFICE
WASHINGTON, DC 20231
www.uspto.gov

MAILED

MAR 1 8 2002

Office of the Director
Group 3600

William E. Johnson, Jr.
The Matthews Firm
1900 West Loop South
Suite 1800
Houston, TX 77027

Paper No. 17

In re application of
Jeffrey D. Musslewhite et al.
Application No. 09/524,117
Filed: March 13, 2000
For: WELL COMPLETION CONVERTIBLE FLOAT SHOE/COLLAR

DECISION ON PETITION TO MAKE SPECIAL (INFRINGEMENT)

This is a decision on the petition under 37 C.F.R § 1.102(d) filed December 13, 2001 to make the above-identified application special.

The petition requests that the above-identified application be made special under the procedure set forth in M.P.E.P. § 708.02, item II: Infringement.

MPEP 708.02 states that a Petition to Make Special based on Infringement must have the following: (1) the appropriate petition fee under 37 CFR 1.17(i); (2) a statement by the assignee, applicant, or attorney alleging: (A) that there is an infringing device or product actually on the market; (B) that a rigid comparison of the alleged infringing device or product with the claims of the application has been made, and that, in his or her opinion, some of the claims are unquestionably infringed; and (C) that he or she has made a careful and thorough search of the prior art, or has good knowledge of the prior art, and has sent a copy of the references deemed most closely related to the subject matter encompassed by the claims.

The petition filed December 13, 2001 includes all of the requirements above and, therefore, the petition is **GRANTED**.

The examiner is directed (1) to make an interference search for possible interfering applications; (2) to promptly examine this application out of turn; and (3) if any interfering application is discovered, to examine such application simultaneously and state in the first official letter of such application that it is being taken out of turn because of a possible interference.

Petitioner is advised that this application will continue to be special, throughout its entire prosecution and pendency, including interference and appeal, if any, only if petitioner makes a prompt *bona fide* effort, in response to each Office action, to place the application in condition for allowance, even if it is necessary to conduct an interview with the examiner to accomplish this purpose.

Steven N. Meyers
Special Programs Examiner
Technology Center 3600
(703) 308-3868

snm/snm : 3/9/02

UNITED STATES PATENT AND TRADEMARK OFFICE

Commissioner for Patents
United States Patent and Trademark Office
P.O. Box 1450
Alexandria, VA 22313-1450
www.uspto.gov

Paper No. 20

SQUARE D COMPANY
INTELLECTUAL PROPERTY DEPARTMENT
1415 SOUTH ROSELLE ROAD
PALATINE, IL 60067

COPY MAILED
MAY 2 4 2004
OFFICE OF PETITIONS

In re Application of	:	
Richard A. Baker	:	
Application No. 09/524,171	:	DECISION GRANTING PETITION
Filed: March 13, 2000	:	UNDER 37 CFR 313(c)(2)
Attorney Docket No. SAA-34	:	

This is a decision on the petition, filed May 20, 2004, under 37 CFR 1.313(c)(2) to withdraw the above-identified application from issue after payment of the issue fee.

The petition is **GRANTED**.

The above-identified application is withdrawn from issue for consideration of a submission under 37 CFR 1.114 (request for continued examination). See 37 CFR 1.313(c)(2).

Petitioner is advised that the issue fee paid on April 5, 2004 in the above-identified application cannot be refunded. If, however, the above-identified application is again allowed, petitioner may request that it be applied towards the issue fee required by the new Notice of Allowance.[1]

It does not appear, absent benefit of the file record at this time, that the instant petition is signed by an attorney of record. However, in accordance with 37 CFR 1.34(a), the signature of Mr. Bishop appearing on the correspondence shall constitute a representation to the United States Patent and Trademark

---

[1] The request to apply the issue fee to the new Notice may be satisfied by completing and returning the new Issue Fee Transmittal Form PTOL-85(b), which includes the following language thereon: "Commissioner for Patents is requested to apply the Issue Fee and Publication Fee (if any) or re-apply any previously paid issue fee to the application identified above." Petitioner is advised that, whether a fee is indicated as being due or not, the Issue Fee Transmittal Form **must** be completed and timely submitted to avoid abandonment. Note the language in bold text on the first page of the Notice of Allowance and Fee(s) Due (PTOL-85).

Office that he is authorized to represent the particular party in whose behalf he acts. Since it cannot be determined whether Mr. Bishop has ever been appointed as an attorney of record, the change of address filed concurrently with the petition will not be entered at this time. However, if, in fact, Mr. Bishop was never appointed as an attorney of record and Mr. Bishop desires to receive correspondence regarding this file, the appropriate power of attorney documentation must be submitted. A courtesy copy of this decision is being mailed to Mr. Bishop, the petitioner herein. However, until otherwise instructed, all future correspondence regarding this application file will be directed solely to the above-noted correspondence address of record.

Telephone inquiries should be directed to the undersigned at (703) 305-8680.

Upon receipt of the file in the Office of Petitions, the file will be forwarded to Technology Center AU 2154 for processing of the request for continued examination under 37 CFR 1.114 and for consideration of the concurrently filed Information Disclosure Statement.

Frances Hicks

Frances Hicks
Petitions Examiner
Office of Petitions
Office of the Deputy Commissioner
for Patent Examination Policy

cc:

Edward L. Bishop
Wallenstein Wagner & Rockey Ltd.
311 South Wacker Drive, 53rd Floor
Chicago, Illinois 60606-6630

UNITED STATES PATENT AND TRADEMARK OFFICE

COMMISSIONER FOR PATENTS
UNITED STATES PATENT AND TRADEMARK OFFICE
P.O. BOX 1450
ALEXANDRIA, VA 22313-1450
www.uspto.gov

Paper No. 6

MOTOROLA, INC.
1303 EAST ALGONQUIN ROAD
IL01/3RD
SCHAUMBURG IL 60196

In re Application of: BRIAN K CLASSON, ET AL. Application No.: 09/524,172 Filed: March 13, 2000 For: **DECODER-USABLE SYNDROME GENERATION WITH REPRESENTATION GENERATED WITH INFORMATION BASED ON VECTOR PORTION**	)) **DECISION ON PETITION TO**) **WITHDRAW THE HOLDING OF**) **ABANDONMENT**

This is in reply to Petitioner's petition to Withdraw the Holding of Abandonment under 37 CFR 1.181, filed in the United States Patent and Trademark Office on December 22, 2003. No fee is required.

The Petition is **GRANTED**.

A review of the file record reveals that the application was held abandoned on December 09, 2003 for failure to respond to the Office Letter dated March 07, 2003, within the Shortened Statutory Period of three months set therein.

Petitioner has submitted by facsimile transmission a copy of the response to the Office letter dated March 07, 2003, which includes a certificate of transmission dated March 18, 2003, a copy of the Facsimile Transmission confirmation of the complete transmission, and a copy of USPTO Auto-Reply Facsimile Transmission.

Since a timely response to the Office Letter was filed, the holding of abandonment dated December 09, 2003 is hereby withdrawn, and the application is restored to pending status. The application will be forwarded to the Examiner of Record for prompt action on the merits of the application.

Bot LeDynh, J.D., Ph.D.
Special Programs Examiner
Technology Center 2100
Computer Architecture, Software, and Information Security
(703) 305-0651

OIPE
SEP 08 2006
PATENT & TRADEMARK OFFICE

9-11-06

DOCKET NO.: POPT-0002 PATENT

IN THE UNITED STATES PATENT AND TRADEMARK OFFICE

In Re Application of:

Gilbert A. Segal, et al. **Confirmation No.: 7194**

Application No.: 09/524,205 **Group Art Unit: 1762**

Filing Date: March 13, 2000 **Examiner: Bashore, Alain L.**

For: INTERACTIVE INTERNET ANALYSIS METHOD

EXPRESS MAIL LABEL NO: EV 817332423 US
DATE OF DEPOSIT: September 8, 2006

PLACE EXPRESS MAIL LABEL
PEEL OFF STICKER HERE

Commissioner for Patents
P.O. Box 1450
Alexandria, VA 22313-1450

Sir:

PETITION TO MAKE SPECIAL DUE TO AGE OF APPLICANT
(MPEP § 708.02)

Applicant hereby petitions to make this application special due to applicant Ernest Zerenner's age. Mr. Zerenner will turn 65 on September 8, 2006.

Accompanying this petition is a true and correct copy of Mr. Zerenner's drivers license showing a birth date of September 8, 1941 and evidencing that he is over the age of 65 required by MPEP Section 708.02.

In light of the foregoing, Applicant requests expedited examination on the merits of this application.

PETITION GRANTED

William Krynski
Special Program Examiner
Technology Center 1700
OCT 16 2006

UNITED STATES PATENT AND TRADEMARK OFFICE

COMMISSIONER FOR PATENTS
UNITED STATES PATENT AND TRADEMARK OFFICE
WASHINGTON, D.C. 20231
www.uspto.gov

Mailed

MAR 19 2001

Technology Center 2100

Paper No. 7

Yisun Song
Hunton & Williams
1900 K Street NW
Washington, DC 20006

In re Application of: Joseph J. Gatto	)	
Application No. 09/524,253	)	**DECISION ON PETITION**
Filed: March 13, 2000	)	**FOR ACCELERATED**
For: SECURITY ANALYSTS	)	**EXAMINATION UNDER**
ESTIMATES PERFORMANCE	)	**M.P.E.P. §708.02(VIII)**
VIEWING SYSTEM AND METHOD	)	

This is a decision on the petition, filed May 11, 2000 under 37 C.F.R. §1.102(d) and M.P.E.P. §708.02(VIII): Accelerated Examination, to make the above-identified application special.

M.P.E.P. §708.02, Section VIII which sets out the prerequisites for a grantable petition for Accelerated Examination under 37 C.F.R. §1.102(d) states in relevant part:

A new application (one which has not received any examination by the examiner) may be granted special status provided that applicant (and this term includes applicant's attorney or agent) complies with each of the following items:

(a) Submits a petition to make special accompanied by the fee set forth in 37 CFR 1.17(i);

(b) Presents all claims directed to a single invention, or if the Office determines that all the claims presented are not obviously directed to a single invention, ***will make an election without traverse*** as a prerequisite to the grant of special status.

(c) Submits a statement(s) that a pre - examination search was made, listing the field of search by class and subclass, publication, Chemical Abstracts, foreign patents, etc. A search made by a foreign patent office satisfies this requirement;

(d) Submits one copy each of the references deemed most closely related to the subject matter encompassed by the claims if said references are not already of record; and

(e) Submits a detailed discussion of the references, which discussion points out, with the particularity required by 37 CFR 1.111(b) and (c), how the claimed subject matter is patentable over the references.

> In those instances where the request for this special status does not meet all the prerequisites set forth above, ***applicant will be notified and the defects in the request will be stated.*** The application will remain in the status of a new application awaiting action in its regular turn. In those instances where a request is defective in one or more respects, applicant will be given one opportunity to perfect the request in a renewed petition to make special. If perfected, the request will then be granted. If not perfected in the first renewed petition, any additional renewed petitions to make special may or may not be considered at the discretion of the Group Special Program Examiner.

Applicant's submission is deficient because it does meet the requirements of section (b) . The petition does not contain the statement that Applicant will make an election ***without traverse*** if the Office determines that all claims are not obviously directed to a single invention.

Accordingly, the Petition is **DENIED**. The application file is being forwarded to Central Files to await examination in its proper turn based on its effective filing date.

Any request for reconsideration must be filed within two months of the mailing date of this decision.

Pinchus M. Laufer

Pinchus M. Laufer
Special Programs Examiner
Technology Center 2100
Computer Architecture, Software, and Electronic Commerce
(703) 306-4160

JGG/YS #7

UNITED STATES PATENT AND TRADEMARK OFFICE

COMMISSIONER FOR PATENTS
UNITED STATES PATENT AND TRADEMARK OFFICE
WASHINGTON, D.C. 20231
www.uspto.gov

Mailed

MAR 1 9 2001

Technology Center 2100

56351.9

Paper No. 7

Yisun Song
Hunton & Williams
1900 K Street NW
Washington, DC 20006

OIPE JC68
MAR 2 6 2001
PATENT & TRADEMARK OFFICE

RECEIVED
MAR 2 1 2001
HUNTON & WILLIAM

In re Application of: Joseph J. Gatto	)	**DECISION ON PETITION FOR ACCELERATED EXAMINATION UNDER M.P.E.P. §708.02(VIII)**
Application No. 09/524,253	)	
Filed: March 13, 2000	)	
For: SECURITY ANALYSTS ESTIMATES PERFORMANCE VIEWING SYSTEM AND METHOD	)	

This is a decision on the petition, filed May 11, 2000 under 37 C.F.R. §1.102(d) and M.P.E.P. §708.02(VIII): Accelerated Examination, to make the above-identified application special.

M.P.E.P. §708.02, Section VIII which sets out the prerequisites for a grantable petition for Accelerated Examination under 37 C.F.R. §1.102(d) states in relevant part:

A new application (one which has not received any examination by the examiner) may be granted special status provided that applicant (and this term includes applicant's attorney or agent) complies with each of the following items:

(a) Submits a petition to make special accompanied by the fee set forth in 37 CFR 1.17(i);

(b) Presents all claims directed to a single invention, or if the Office determines that all the claims presented are not obviously directed to a single invention, ***will make an election without traverse*** as a prerequisite to the grant of special status.

(c) Submits a statement(s) that a pre - examination search was made, listing the field of search by class and subclass, publication, Chemical Abstracts, foreign patents, etc. A search made by a foreign patent office satisfies this requirement;

(d) Submits one copy each of the references deemed most closely related to the subject matter encompassed by the claims if said references are not already of record; and

(e) Submits a detailed discussion of the references, which discussion points out, with the particularity required by 37 CFR 1.111(b) and (c), how the claimed subject matter is patentable over the references.

DOCKETED : 3/21/01
ACTION CODE : Request for Reconsideration
BASE DATE : 3/19/01
DUE DATE : 5/19/01
DEADLINE : —
ATTORNEYS : JGG/YS
INITIALS : [illegible]

> In those instances where the request for this special status does not meet all the prerequisites set forth above, ***applicant will be notified and the defects in the request will be stated***. The application will remain in the status of a new application awaiting action in its regular turn. In those instances where a request is defective in one or more respects, applicant will be given one opportunity to perfect the request in a renewed petition to make special. If perfected, the request will then be granted. If not perfected in the first renewed petition, any additional renewed petitions to make special may or may not be considered at the discretion of the Group Special Program Examiner.

Applicant's submission is deficient because it does meet the requirements of section (b) . The petition does not contain the statement that Applicant will make an election ***without traverse*** if the Office determines that all claims are not obviously directed to a single invention.

Accordingly, the Petition is **DENIED**. The application file is being forwarded to Central Files to await examination in its proper turn based on its effective filing date.

Any request for reconsideration must be filed within two months of the mailing date of this decision.

Pinchus M. Laufer

Pinchus M. Laufer
Special Programs Examiner
Technology Center 2100
Computer Architecture, Software, and Electronic Commerce
(703) 306-4160

UNITED STATES PATENT AND TRADEMARK OFFICE

#10

COMMISSIONER FOR PATENTS
UNITED STATES PATENT AND TRADEMARK OFFICE
WASHINGTON, D.C. 20231
www.uspto.gov

Mailed

APR 0 9 2001

Technology Center 2100

Paper No. 10

Yisun Song
Hunton & Williams
1900 K Street NW
Washington, DC 20006

In re Application of: Joseph J. Gatto	)	
Application No. 09/524,253	)	**DECISION ON PETITION**
Filed: March 13, 2000	)	**FOR ACCELERATED**
For: SECURITY ANALYSTS	)	**EXAMINATION UNDER**
ESTIMATES PERFORMANCE	)	**M.P.E.P. §708.02(VIII)**
VIEWING SYSTEM AND METHOD	)	

This is a decision on the petition, filed March 26, 2001 under 37 C.F.R. §1.102(d) and M.P.E.P. §708.02(VIII): Accelerated Examination, to make the above-identified application special.

M.P.E.P. §708.02, Section VIII which sets out the prerequisites for a grantable petition for Accelerated Examination under 37 C.F.R. §1.102(d) states in relevant part:

A new application (one which has not received any examination by the examiner) may be granted special status provided that applicant (and this term includes applicant's attorney or agent) complies with each of the following items:

(a) Submits a petition to make special accompanied by the fee set forth in 37 CFR 1.17(i);

(b) Presents all claims directed to a single invention, or if the Office determines that all the claims presented are not obviously directed to a single invention, will make an election without traverse as a prerequisite to the grant of special status.

(c) Submits a statement(s) that a pre - examination search was made, listing the field of search by class and subclass, publication, Chemical Abstracts, foreign patents, etc. A search made by a foreign patent office satisfies this requirement;

(d) Submits one copy each of the references deemed most closely related to the subject matter encompassed by the claims if said references are not already of record; and

(e) Submits a detailed discussion of the references, which discussion points out, with the particularity required by 37 CFR 1.111(b) and (c), how the claimed subject matter is patentable over the references.

Applicant's submission meets all the criteria set out above, accordingly, the Petition is **GRANTED**.

The application file is being forwarded to the Examiner of Record for accelerated examination according to the procedures set forth in M.P.E.P. §708.02, Section VIII.

Pinchus M. Laufer
Special Programs Examiner
Technology Center 2100
Computer Architecture, Software, and Electronic Commerce
(703) 306-4160

UNITED STATES PATENT AND TRADEMARK OFFICE

COMMISSIONER FOR PATENTS
UNITED STATES PATENT AND TRADEMARK OFFICE
P.O. BOX 1450
ALEXANDRIA, VA 22313-1450
www.uspto.gov

PILLSBURY WINTHROP SHAW PITTMAN, LLP
P.O. BOX 10500
MCLEAN, VA 22102

COPY MAILED

OCT 10 2006

OFFICE OF PETITIONS

In re Application of :
Joseph G. Gatto :
Application No. 09/524,253 :
Filed: March 13, 2000 :
Attorney Docket No.: 56351.000009 :

ON PETITION

This is a decision on the petition, filed October 2, 2006, under 37 CFR 1.313(c)(2) to withdraw the above-identified application from issue after payment of the issue fee.

The petition is **GRANTED**.

The above-identified application is withdrawn from issue for consideration of a submission under 37 CFR 1.114 (request for continued examination). See 37 CFR 1.313(c)(2).

Petitioner is advised that the issue fee paid on July 24, 2006 in the above-identified application cannot be refunded. If, however, the above-identified application is again allowed, petitioner may request that it be applied towards the issue fee required by the new Notice of Allowance. [1]

Telephone inquiries relating to this decision should be directed to the undersigned at (571) 272-3204.

The application is being referred to Technology Center AU 3692 for further processing of the request for continued examination under 37 CFR 1.114.

Sherry D. Brinkley
Petitions Examiner
Office of Petitions

[1]The request to apply the issue fee to the new Notice may be satisfied by completing and returning the new Issue Fee Transmittal Form PTOL-85(b), which includes the following language thereon: "Commissioner for Patents is requested to apply the Issue Fee and Publication Fee (if any) or re-apply any previously paid issue fee to the application identified above." Petitioner is advised that, whether a fee is indicated as being due or not, the Issue Fee Transmittal Form **must** be completed and timely submitted to avoid abandonment. Note the language in bold text on the first page of the Notice of Allowance and Fee(s) Due (PTOL-85).

UNITED STATES PATENT AND TRADEMARK OFFICE

Commissioner for Patents
United States Patent and Trademark Office
P.O. Box 1450
Alexandria, VA 22313-1450
www.uspto.gov

Date : October 6, 2006

TO : Director, Office of Patent Publication

FROM : Office of the Deputy Commissioner for Patent Examination Policy

SUBJECT : Withdrawal from Issue of

Applicant(s) : Joseph G. Gatto
Application No. : 09/524,253
Filed : March 13, 2000

The above-identified application has been assigned Patent No. 7,124,103 and an issue date of October 17, 2006.

It is hereby directed that this application be withdrawn from issue at the request of the applicant.

Do not refund the issue fee.

The following erratum should be published in the Official Gazette if the above-identified application is published in the OG of October 17, 2006:

> "All reference to Patent No. 7,124,103 to JOSEPH G. GATTO. of CALIFORNIA for SECURITY ANALYST ESTIMATES PERFORMANCE VIEWING SYSTEM AND METHOD appearing in the Official Gazette of October 17, 2006, should be deleted since no patent was granted."

Sherry D. Brinkley
Petitions Examiner
Office of Petitions

cc: Paul Harrison, Crystal Park 3-44l (FAX-306-2737)
Deneise Boyd, Crystal Park 2, Suite 1100 (FAX-308-5413)
Mary Louise McAskill, Crystal Park 3-910 (FAX 305-4372)
Niomi Farmer, Crystal Park 3-9l0 (FAX-305-4372)
Mary E. Johnson (Cookie), P/OCS, CM1-6D07
Duane K.Davis, P/OCS, CM1-6A07
Tamara K. Greene, PK3-910