#8
DW

UNITED STATES PATENT AND TRADEMARK OFFICE

UNDER SECRETARY OF COMMERCE FOR INTELLECTUAL PROPERTY AND
DIRECTOR OF THE UNITED STATES PATENT AND TRADEMARK OFFICE
WASHINGTON, DC 20231
www.uspto.gov

JUL 12 2002

MAILED

JUL 12 2002

OFFICE OF THE DIRECTOR
TC 3600

ROBERT S BEISER
MICHAEL BEST & FRIEDRICH LLP
100 EAST WISCONSIN AVENUE
MILWAUKEE WI 53202-4108

In re Application of	:	
Gerald Peters	:	
Serial No. 09/553,877	:	DECISION ON REQUEST
Filed April 20, 2000	:	FOR WITHDRAWAL AS
For: INTEGRATED SYSTEM FOR THE	:	ATTORNEY
ADMINISTRATION OF AN	:	
INSURANCE COMPANY	:	

This is a decision on the request filed on June 18, 2002, under 37 CFR 1.36 and MPEP 402.06, requesting permission to withdraw as the attorney of record in the above-identified application.

The request is **NOT APPROVED**.

Under 37 CFR 1.36 an attorney may withdraw only upon application to and approval by the Commissioner. It should be noted that a withdrawal is effective when approved, not when filed. For approval of such a request the following conditions must be met:

A) Each attorney of record must sign the notice of withdrawal, or the notice must contain a clear indication of one attorney signing on behalf of another, because the Office does not recognize law firms;
B) There must be at least 30 days between approval of the withdrawal and the later of the expiration date of a time period for reply or the expiration date of the period which can be obtained by a petition and fee for extension of time under 37 CFR 1.136(a);
C) A proper reason for the withdrawal as enumerated in 37 CFR 10.40(b) or subsection (1)-(6) of 37 CFR 10.40(c) must be provided;
D) The applicant or patent owner must have been notified of the withdrawal as provided for in 37 CFR 1.36.

The request to withdraw as attorney is not accepted in the above-identified application because the request lacks condition D) above.

Also, the withdrawing attorney has asked that the correspondence address be changed to a third party who at this point has no vested interest in, or identified relationship to, this application. Therefore, even if the withdrawal request was approved, the correspondence address would be changed to that of the inventor in this case.

In summary, the request is **NOT APPROVED**.

Steven N. Meyers, Special Programs Examiner
Patent Technology Center 3600
(703) 308-3868
Facsimile No.: (703) 605-0586

SM/dw; 7/8/02

UNITED STATES PATENT AND TRADEMARK OFFICE

Commissioner for Patents
United States Patent and Trademark Office
P.O. Box 1450
Alexandria, VA 22313-1450
www.uspto.gov

In re Patent No. 6402008
Issue Date: June 11,2002
Application No. 09553906
Filed: April 20,2000
Attorney Docket No. LUC-01

:
:DECISION GRANTING PETITION
:UNDER 37 CFR 1.378(c)
:

This is a decision on the electronic petition, filed April 18,2007 ,under 37 CFR 1.378(c) to accept the unintentionally delayed payment of the 3.5 year maintenance fee for the above-identified patent.

The petition is GRANTED.

The maintenance fee is accepted, and the above-identified patent reinstated as of April 18,2007 . This decision also constitutes notice that the fee has been accepted. An electronic copy of the petition and this decision has been created as an entry in an Image File Wrapper. Nevertheless, petitioner should print and retain an independent copy

Telephone inquires related to this electronic decision should be directed to the Electronic Business Center at 1-866-217-9197.

Under the Paperwork Reduction Act of 1995, no persons are required to respond to a collection of information unless it displays valid OMB control number.

PETITION TO ACCEPT UNINTENTIONALLY DELAYED PAYMENT OF MAINTENANCE FEE IN AN EXPIRED PATENT (37 CFR 1.378(c))

Patent Number	Issue Date (YYYY-MM-DD)	Application Number	Filing Date (YYYY-MM-DD)	Docket Number (if applicable)
6402008	2002-06-11	09553906	2000-04-20	LUC-01

CAUTION: Maintenance fee (and surcharge, if any) payment must correctly identify: (1) the patent number and (2) the application number of the actual U.S. application leading to issuance of that patent to ensure the fee(s) is/are associated with the correct patent. 37 CFR 1.366(c) and (d).

SMALL ENTITY
☒ Patentee claims, or has previously claimed, small entity status. See 37 CFR 1.27.

LOSS OF ENTITLEMENT TO SMALL ENTITY STATUS
☐ Patentee is no longer entitled to small entity status. See 37 CFR 1.27(g)

NOT Small Entity		Small Entity	
Fee	Code	Fee	Code
○ 3 ½ year	(1551)	◉ 3 ½ year	(2551)
○ 7 ½ year	(1552)	○ 7 ½ year	(2552)
○ 11 ½ year	(1553)	○ 11 ½ year	(2553)

SURCHARGE
The surcharge required by 37 CFR 1.20(i)(2) (Fee Code 1558) must be paid as a condition of accepting unintentionally delayed payment of the maintenance fee.

MAINTENANCE FEE (37 CFR 1.20(e)-(g))
The appropriate maintenance fee must be submitted with this petition.

STATEMENT
THE UNDERSIGNED CERTIFIES THAT THE DELAY IN PAYMENT OF THE MAINTENANCE FEE TO THIS PATENT WAS UNINTENTIONAL

PETITIONER(S) REQUEST THAT THE DELAYED PAYMENT OF THE MAINTENANCE FEE BE ACCEPTED AND THE PATENT REINSTATED

THIS PORTION MUST BE COMPLETED BY THE SIGNATORY OR SIGNATORIES

37 CFR 1.378(d) states: "Any petition under this section must be signed by an attorney or agent registered to practice before the Patent and Trademark Office, or by the patentee, the assignee, or other party in interest."

I certify, in accordance with 37 CFR 1.4(d)(4) that I am

◉ An attorney or agent registered to practice before the Patent and Trademark Office

○ A sole patentee

○ A joint patentee; I certify that I am authorized to sign this submission on behalf of all the other patentees.

○ A joint patentee; all of whom are signing this e-petition

○ The assignee of record of the entire interest

Patent Practitioner			
A signature of the applicant or representative is required in accordance with 37 CFR 1.33 and 10.18. Please see 37 CFR 1.4(d) for the form of the signature			
Signature	/Daniel N. Lundeen/	Date (YYYY-MM-DD)	2007-04-18
Name	Daniel N. Lundeen	Registration Number	31177

This collection of information is required by 37 CFR 1.378(c). The information is required to obtain or retain a benefit by the public which is to file (and by the USPTO to process) an application. Confidentiality is governed by 35 U.S.C. 122 and 37 CFR 1.11 and 1.14. This collection is estimated to take 1 hour to complete, including gathering, preparing, and submitting the completed application form to the USPTO. Time will vary depending upon the individual case. Any comments on the amount of time you require to complete this form and/ or suggestions for reducing this burden, should be sent to the Chief Information Officer, U.S. Patent and Trademark Office, U.S. Department of Commerce, P.O. Box 1450, Alexandria, VA 22313-1450. DO NOT SEND FEES OR COMPLETED FORMS TO THIS ADDRESS. **This form can only be used when in conjunction with EFS-Web. If this form is mailed to the USPTO, it may cause delays in reinstating the patent.**

Privacy Act Statement

The Privacy Act of 1974 (P.L. 93-579) requires that you be given certain information in connection with your submission of the attached form related to a patent application or patent. Accordingly, pursuant to the requirements of the Act, please be advised that: (1) the general authority for the collection of this information is 35 U.S.C. 2(b)(2); (2) furnishing of the information solicited is voluntary; and (3) the principal purpose for which the information is used by the U.S. Patent and Trademark Office is to process and/or examine your submission related to a patent application or patent. If you do not furnish the requested information, the U.S. Patent and Trademark Office may not be able to process and/or examine your submission, which may result in termination of proceedings or abandonment of the application or expiration of the patent.

The information provided by you in this form will be subject to the following routine uses:

1. The information on this form will be treated confidentially to the extent allowed under the Freedom of Information Act (5 U.S.C. 552) and the Privacy Act (5 U.S.C. 552a). Records from this system of records may be disclosed to the Department of Justice to determine whether the Freedom of Information Act requires disclosure of these record s.

2. A record from this system of records may be disclosed, as a routine use, in the course of presenting evidence to a court, magistrate, or administrative tribunal, including disclosures to opposing counsel in the course of settlement negotiations.

3. A record in this system of records may be disclosed, as a routine use, to a Member of Congress submitting a request involving an individual, to whom the record pertains, when the individual has requested assistance from the Member with respect to the subject matter of the record.

4. A record in this system of records may be disclosed, as a routine use, to a contractor of the Agency having need for the information in order to perform a contract. Recipients of information shall be required to comply with the requirements of the Privacy Act of 1974, as amended, pursuant to 5 U.S.C. 552a(m).

5. A record related to an International Application filed under the Patent Cooperation Treaty in this system of records may be disclosed, as a routine use, to the International Bureau of the World Intellectual Property Organization, pursuant to the Patent Cooperation Treaty.

6. A record in this system of records may be disclosed, as a routine use, to another federal agency for purposes of National Security review (35 U.S.C. 181) and for review pursuant to the Atomic Energy Act (42 U.S.C. 218(c)).

7. A record from this system of records may be disclosed, as a routine use, to the Administrator, General Services, or his/her designee, during an inspection of records conducted by GSA as part of that agency's responsibility to recommend improvements in records management practices and programs, under authority of 44 U.S.C. 2904 and 2906. Such disclosure shall be made in accordance with the GSA regulations governing inspection of records for this purpose, and any other relevant (i.e., GSA or Commerce) directive. Such disclosure shall not be used to make determinations about individuals.

8. A record from this system of records may be disclosed, as a routine use, to the public after either publication of the application pursuant to 35 U.S.C. 122(b) or issuance of a patent pursuant to 35 U.S.C. 151. Further, a record may be disclosed, subject to the limitations of 37 CFR 1.14, as a routine use, to the public if the record was filed in an application which became abandoned or in which the proceedings were terminated and which application is referenced by either a published application, an application open to public inspections or an issued patent.

9. A record from this system of records may be disclosed, as a routine use, to a Federal, State, or local law enforcement agency, if the USPTO becomes aware of a violation or potential violation of law or regulation.

UNITED STATES PATENT AND TRADEMARK OFFICE

Commissioner for Patents
United States Patent and Trademark Office
P.O. Box 1450
Alexandria, VA 22313-1450
www.uspto.gov

Paper No. 26

Townsend & Townsend & Crew
Two Embarcadero Center
Eighth Floor
San Francisco, CA 94111-3834

COPY MAILED

DEC 2 2 2003

OFFICE OF PETITIONS

In re Application of	:	
Donald G. Wallace et al.	:	
Application No. 09/553,969	:	ON PETITION
Filed: April 21, 2000	:	
Attorney Docket No. 01767-002040USWMFUS 5869 US	:	

This is a decision on the petition under 37 CFR 1.137(b), filed September 12, 2003, to revive the above-identified application.

The petition is granted.

The above-identified application became abandoned for failure to reply within the meaning of 37 CFR 1.113 in a timely manner to the final Office action mailed January 29, 2003, which set a shortened statutory period for reply of three (3) months. No extensions of time under the provisions of 37 CFR 1.136(a) were obtained. Accordingly, the above-identified application became abandoned on April 30, 2003.

The two-month period for filing an appeal brief in triplicate (accompanied by the fee required by 37 CFR 1.17(c)), runs from the date of this decision.

The application file is being forwarded to Technology Center AU 1615 for further processing.

Telephone inquiries concerning this decision should be directed to Latrice Bond at (703) 308-6911.

Latrice Bond

Latrice Bond
Petitions Examiner
Office of Petitions
Office of the Deputy Commissioner
for Patent Examination Policy

UNITED STATES PATENT AND TRADEMARK OFFICE

Commissioner for Patents
United States Patent and Trademark Office
P.O. Box 1450
Alexandria, VA 22313-1450
www.uspto.gov

In re Patent No. 6469690
Issue Date: October 22,2002
Application No. 09553996
Filed: April 20,2000
Attorney Docket No. 13265(YOR919990593US1)

:
:DECISION GRANTING PETITION
:UNDER 37 CFR 1.378(c)
:

This is a decision on the electronic petition, filed October 22,2008 ,under 37 CFR 1.378(c) to accept the unintentionally delayed payment of the 3.5 year maintenance fee for the above-identified patent.

The petition is **GRANTED**.

The maintenance fee is accepted, and the above-identified patent reinstated as of October 22,2008 . This decision also constitutes notice that the fee has been accepted. An electronic copy of the petition and this decision has been created as an entry in the Image File Wrapper. Nevertheless, petitioner should print and retain an independent copy.

Telephone inquiries related to this electronic decision should be directed to the Electronic Business Center at 1-866-217-9197.

Under the Paperwork Reduction Act of 1995, no persons are required to respond to a collection of information unless it displays valid OMB control number.

PETITION TO ACCEPT UNINTENTIONALLY DELAYED PAYMENT OF MAINTENANCE FEE IN AN EXPIRED PATENT (37 CFR 1.378(c))

Patent Number	Issue Date (YYYY-MM-DD)	Application Number	Filing Date (YYYY-MM-DD)	Docket Number (if applicable)
6469690	2002-10-22	09/553,996	2000-04-20	105479-

CAUTION: Maintenance fee (and surcharge, if any) payment must correctly identify: (1) the patent number and (2) the application number of the actual U.S. application leading to issuance of that patent to ensure the fee(s) is/are associated with the correct patent. 37 CFR 1.366(c) and (d).

SMALL ENTITY
☐ Patentee claims, or has previously claimed, small entity status. See 37 CFR 1.27.

LOSS OF ENTITLEMENT TO SMALL ENTITY STATUS
☐ Patentee is no longer entitled to small entity status. See 37 CFR 1.27(g)

NOT Small Entity		Small Entity	
Fee	Code	Fee	Code
◉ 3 ½ year	(1551)	○ 3 ½ year	(2551)
○ 7 ½ year	(1552)	○ 7 ½ year	(2552)
○ 11 ½ year	(1553)	○ 11 ½ year	(2553)

SURCHARGE
The surcharge required by 37 CFR 1.20(i)(2) (Fee Code 1558) must be paid as a condition of accepting unintentionally delayed payment of the maintenance fee.

MAINTENANCE FEE (37 CFR 1.20(e)-(g))
The appropriate maintenance fee must be submitted with this petition.

STATEMENT
THE UNDERSIGNED CERTIFIES THAT THE DELAY IN PAYMENT OF THE MAINTENANCE FEE TO THIS PATENT WAS UNINTENTIONAL

PETITIONER(S) REQUEST THAT THE DELAYED PAYMENT OF THE MAINTENANCE FEE BE ACCEPTED AND THE PATENT REINSTATED

THIS PORTION MUST BE COMPLETED BY THE SIGNATORY OR SIGNATORIES

37 CFR 1.378(d) states: "Any petition under this section must be signed by an attorney or agent registered to practice before the Patent and Trademark Office, or by the patentee, the assignee, or other party in interest."

I certify, in accordance with 37 CFR 1.4(d)(4) that I am

◉ An attorney or agent registered to practice before the Patent and Trademark Office

○ A sole patentee

○ A joint patentee; I certify that I am authorized to sign this submission on behalf of all the other patentees.

○ A joint patentee; all of whom are signing this e-petition

○ The assignee of record of the entire interest

Patent Practitioner			
A signature of the applicant or representative is required in accordance with 37 CFR 1.33 and 10.18. Please see 37 CFR 1.4(d) for the form of the signature			
Signature	/Andrew M. Grodin/	Date (YYYY-MM-DD)	2008-10-22
Name	Andrew M. Grodin	Registration Number	50728

This collection of information is required by 37 CFR 1.378(c). The information is required to obtain or retain a benefit by the public which is to file (and by the USPTO to process) an application. Confidentiality is governed by 35 U.S.C. 122 and 37 CFR 1.11 and 1.14. This collection is estimated to take 1 hour to complete, including gathering, preparing, and submitting the completed application form to the USPTO. Time will vary depending upon the individual case. Any comments on the amount of time you require to complete this form and/ or suggestions for reducing this burden, should be sent to the Chief Information Officer, U.S. Patent and Trademark Office, U.S. Department of Commerce, P.O. Box 1450, Alexandria, VA 22313-1450. DO NOT SEND FEES OR COMPLETED FORMS TO THIS ADDRESS. **This form can only be used when in conjunction with EFS-Web. If this form is mailed to the USPTO, it may cause delays in reinstating the patent.**

Privacy Act Statement

The Privacy Act of 1974 (P.L. 93-579) requires that you be given certain information in connection with your submission of the attached form related to a patent application or patent. Accordingly, pursuant to the requirements of the Act, please be advised that: (1) the general authority for the collection of this information is 35 U.S.C. 2(b)(2); (2) furnishing of the information solicited is voluntary; and (3) the principal purpose for which the information is used by the U.S. Patent and Trademark Office is to process and/or examine your submission related to a patent application or patent. If you do not furnish the requested information, the U.S. Patent and Trademark Office may not be able to process and/or examine your submission, which may result in termination of proceedings or abandonment of the application or expiration of the patent.

The information provided by you in this form will be subject to the following routine uses:

1. The information on this form will be treated confidentially to the extent allowed under the Freedom of Information Act (5 U.S.C. 552) and the Privacy Act (5 U.S.C. 552a). Records from this system of records may be disclosed to the Department of Justice to determine whether the Freedom of Information Act requires disclosure of these record s.

2. A record from this system of records may be disclosed, as a routine use, in the course of presenting evidence to a court, magistrate, or administrative tribunal, including disclosures to opposing counsel in the course of settlement negotiations.

3. A record in this system of records may be disclosed, as a routine use, to a Member of Congress submitting a request involving an individual, to whom the record pertains, when the individual has requested assistance from the Member with respect to the subject matter of the record.

4. A record in this system of records may be disclosed, as a routine use, to a contractor of the Agency having need for the information in order to perform a contract. Recipients of information shall be required to comply with the requirements of the Privacy Act of 1974, as amended, pursuant to 5 U.S.C. 552a(m).

5. A record related to an International Application filed under the Patent Cooperation Treaty in this system of records may be disclosed, as a routine use, to the International Bureau of the World Intellectual Property Organization, pursuant to the Patent Cooperation Treaty.

6. A record in this system of records may be disclosed, as a routine use, to another federal agency for purposes of National Security review (35 U.S.C. 181) and for review pursuant to the Atomic Energy Act (42 U.S.C. 218(c)).

7. A record from this system of records may be disclosed, as a routine use, to the Administrator, General Services, or his/her designee, during an inspection of records conducted by GSA as part of that agency's responsibility to recommend improvements in records management practices and programs, under authority of 44 U.S.C. 2904 and 2906. Such disclosure shall be made in accordance with the GSA regulations governing inspection of records for this purpose, and any other relevant (i.e., GSA or Commerce) directive. Such disclosure shall not be used to make determinations about individuals.

8. A record from this system of records may be disclosed, as a routine use, to the public after either publication of the application pursuant to 35 U.S.C. 122(b) or issuance of a patent pursuant to 35 U.S.C. 151. Further, a record may be disclosed, subject to the limitations of 37 CFR 1.14, as a routine use, to the public if the record was filed in an application which became abandoned or in which the proceedings were terminated and which application is referenced by either a published application, an application open to public inspections or an issued patent.

9. A record from this system of records may be disclosed, as a routine use, to a Federal, State, or local law enforcement agency, if the USPTO becomes aware of a violation or potential violation of law or regulation.

SPE RESPONSE FOR CERTIFICATE OF CORRECTION

Paper No.: _____

DATE : 06/13/06

TO SPE OF : ART UNIT 2822

SUBJECT : Request for Certificate of Correction for Appl. No.: **09/553997** Patent No.: **6984591**

Please respond to this request for a certificate of correction within 7 days.

Please review the requested changes/corrections as shown in the **COCIN** document(s) in the IFW application image. No new matter should be introduced, nor should the scope or meaning of the claims be changed.

Please complete the response (see below) and forward the completed response to scanning using document code **COCX**.

Angela Green
Certificates of Correction Branch
703.308.9380 ext.

Thank You For Your Assistance

The request for issuing the above-identified correction(s) is hereby:
Note your decision on the appropriate box.

- ☒ **Approved** — **All** changes apply.
- ☐ **Approved in Part** — Specify below which changes **do not** apply.
- ☐ **Denied** — State the reasons for denial below.

Comments: _____

Zandra V. Smith
Supervisory Patent Examiner

SPE **Art Unit** 2822

SPE RESPONSE FOR CERTIFICATE OF CORRECTION

Paper No.: _____

DATE : 06/13/06

TO SPE OF : ART UNIT 2822

SUBJECT : Request for Certificate of Correction for Appl. No.: **09/553997** Patent No.: **6984591**

Please respond to this request for a certificate of correction within 7 days.

Please review the requested changes/corrections as shown in the **COCIN** document(s) in the IFW application image. No new matter should be introduced, nor should the scope or meaning of the claims be changed.

Please complete the response (see below) and forward the completed response to scanning using document code **COCX**.

Angela Green
Certificates of Correction Branch
703.308.9380 ext.

Thank You For Your Assistance

The request for issuing the above-identified correction(s) is hereby:

Note your decision on the appropriate box.

- ☒ **Approved** — All changes apply.
- ☐ **Approved in Part** — Specify below which changes **do not** apply.
- ☐ **Denied** — State the reasons for denial below.

Comments: _____

_____

_____

_____

_____

SPE **Art Unit** 2822

23 DEC 2002
UNITED STATES PATENT AND TRADEMARK OFFICE

COMMISSIONER FOR PATENTS
UNITED STATES PATENT AND TRADEMARK OFFICE
WASHINGTON, D.C. 20231
www.uspto.gov

23 DEC 2002

Thomas E. Spath
Adelman, Frayne & Schwab
150 East 42nd Street
New York, New York 10017-5612

In re Application of	:	
PLESTENJAK, Joze	:	
Application No.: 09/554,032	:	DECISION ON PETITION
PCT No.: PCT/SI98/00008	:	UNDER 37 CFR 1.181
Int. Filing Date: 30 March 1998	:	
Priority Date: 04 November 1997	:	
Attorney Docket No.: 204,509	:	
For: A DRYING DEVICE	:	

This is a decision on applicant's "PETITION FOR REVIVAL OF AN APPLICATION FOR PATENT ABANDONED UNAVOIDABLY UNDER 37 CFR 1.137(a)" which is being treated as a Petition to Withdraw a Holding of Abandonment under 37 CFR 1.181, filed in the Patent and Trademark Office (PTO) on 01 August 2002.

BACKGROUND

On 01 December 2000, applicants filed international application no. PCT/SI98/00008 which claimed a priority date of 04 November 1997 and designated the United States. A Demand was filed with the International Preliminary Examination Authority prior to the 19th month from the earliest claimed priority date. As a result, the deadline for payment of the basic national fee was to expire 30 months from the priority date, or at midnight on 04 May 2000.

On 04 May 2000, applicant filed a transmittal letter for entry into the national stage in the United States which was accompanied by, *inter alia*,: the basic national fee; first preliminary amendment; and an unsigned declaration.

On 19 June 2000, the United States Designated/Elected Office (DO/EO/US) mailed a NOTIFICATION OF MISSING REQUIREMENT UNDER 35 U.S.C. 371 (Form PCT/DO/EO/905) indicating that an oath or declaration executed by the inventor and the $130.00 surcharge for filing after the thirty-month period was required. The notification set a ONE(1) MONTH period for response.

On 12 July 2002, the United States Designated/Elected Office (DO/EO/US) mailed a NOTIFICATION OF ABANDONMENT (Form PCT/DO/EO/909) indicating that the application was abandoned for failure to file a response to the Notification of Missing Requirements mailed 19 June 2000 within the time period set therein.

On 01 August 2002, applicant filed the present petition. Applicant states in the present petition, "that the Notification of Missing Requirements and Notification of a Defective Oath or Declaration forms relating to this application were not received by this firm," therefore, petitioner statements will be treated as a petition to withdraw holding of abandonment under 37 CFR 1.181.

DISCUSSION

With regards to applicant's request that the holding of abandonment be withdrawn, a proper showing in order to establish that papers were not received as set forth in the Official Gazette at 1156 OG 53 must include the following: (1) a statement by the practitioner that the Office action was not received by the practitioner; (2) a statement attesting that a search of the file jacket and docket records indicates that the Office action was not received; and (3) a copy of the docket record where the non-received Office action would have been entered had it been received (the docket record must also be referenced in practitioner's statement).

Concerning item (2) above, applicant has not provided a statement attesting that a search of the file jacket and docket records indicates that the papers were not received.

With regard to item (3) above, applicant has not provided copies of the docket record where the notification mailed 19 June 2000 would have been entered had it been received or referenced such copies in the statement by practitioner. Specifically, applicant must provide a copy of counsel's docket records for 19 July 2000 (ie, the date on which the response was due) showing all applications for which a response was due on that date.

Thus, applicants have not provided the proper showing necessary to withdraw the holding of abandonment and the petition may not be properly granted.

CONCLUSION

The petition under 37 CFR 1.181 is **DISMISSED** without prejudice and the application remains **ABANDONED**.

The $55 petition fee, submitted on 01 August 2002, has been refunded to Deposit Account no. 01-0035.

If reconsideration on the merits of this petition is desired, an appropriate response to this decision must be filed within **TWO (2) MONTHS** from the mail date of this decision. Any reconsideration request should include a cover letter entitled "Renewed Petition Under 37 CFR 1.181." Extensions of time may be obtained under 37 CFR 1.136(a).

Any further correspondence with respect to this matter should be addressed to the Assistant Commissioner for Patents, Box PCT, Washington, D.C. 20231, with the contents of the letter marked to the attention of the PCT Legal Office.

Anthony Smith
Attorney-Advisor
Office of PCT Legal Administration
Tel.: 703-308-6314
Fax: 703-308-6459

14 FEB 2003

UNITED STATES PATENT AND TRADEMARK OFFICE

COMMISSIONER FOR PATENTS
UNITED STATES PATENT AND TRADEMARK OFFICE
WASHINGTON, D.C. 20231
www.uspto.gov

Thomas E. Spath
Adelman, Frayne & Schwab
150 East 42nd Street
New York, New York 10017-5612

In re Application of	:	
PLESTENJAK, Joze	:	
Application No.: 09/554,032	:	
PCT No.: PCT/SI98/00008	:	DECISION ON PETITION
Int. Filing Date: 30 March 1998	:	UNDER 37 CFR 1.181
Priority Date: 04 November 1997	:	
Attorney Docket No.: 204,509	:	
For: A DRYING DEVICE	:	

This decision is in response to applicant's "Renewed Petition under 37 CFR 1.181" filed 07 January 2003 and "Supplement to Above Renewed Petition under 37 CFR 1.181" filed 10 January 2003 requesting withdrawal of the Notification of Abandonment mailed by the Office on 12 July 2002, in response to a decision mailed 23 December 2002.

DISCUSSION

With regards to applicants' request that the holding of abandonment be withdrawn, a proper showing in order to establish that papers were not received as set forth in the Official Gazette at 1156 OG 53 must include the following: (1) a statement by the practitioner that the Office action was not received by the practitioner; (2) a statement attesting that a search of the file jacket and docket records indicates that the Office action was not received; and (3) a copy of the docket record where the non-received Office action would have been entered had it been received (the docket record must also be referenced in practitioner's statement). The 23 December 2002 decision indicated that applicant has satisfied requirements (1) and (2) above.

As to Item (3), applicant has provided "a listing of office actions that were due on June 19, 2000 from the patent docket computer records database. No record of the Notification appears in the listing." Therefore, since applicant has satisfied Items (1), (2), and (3) above, the request may be properly granted.

CONCLUSION

For the reasons above, the request is **GRANTED**. The holding of Abandonment is withdrawn.

The application has an international filing date of 30 March 1998 under 35 U.S.C. 363 and a 35 U.S.C. 371(c) date of **01 August 2002**.

This application is being returned to the United States/Designated Elected Office for processing in accordance with this decision.

Anthony Smith
Attorney-Advisor
Office of PCT Legal Administration
Tel.: 703-308-6314
Fax: 703-308-6459

MAY 1 1 2001

UNITED STATES PATENT AND TRADEMARK OFFICE

Commissioner for Patents
United States Patent and Trademark Office
Washington, D.C. 20231
www.uspto.gov

FINNEGAN, HENDERSON, FARABOW, GARRETT & DUNNER, LLP
1300 I Street, NW
Washington, D.C. 20005-3315

In re Application of	:	
NAKAJIMA, Kei *et al*	:	
U.S. Application No.: 09/554,065	:	
PCT No.: PCT/JP98/05057	:	
Int. Filing Date: 10 November 1998	:	DECISION ON
Priority Date: 10 November 1997	:	PETITION UNDER 37 CFR
Attorney Docket No.: 05905.0108	:	1.47(a)
For: CHARACTER COMMUNICATION	:	
DEVICE	:	

This is a decision on applicants' "Petition Under 37 C.F.R. §1.47(a)" filed 13 December 2000.

BACKGROUND

On 13 June 2000, the United States Designated/Elected Office (DO/EO/US) mailed a Notification of Missing Requirements under 35 U.S.C. 371 (Form PCT/DO/EO/905) indicating that an oath/declaration in compliance with 37 CFR 1.497(a) and (b), and a surcharge fee for providing the declaration later than thirty months from the priority date as required by 37 CFR 1.492(e) must be provided. Applicants were given one month to respond. Extensions of time were available under 37 CFR 1.136(a).

On 13 December 2000, applicants filed the instant petition which was accompanied by, *inter alia*, a five-month extension request and $1,890.00 fee; the $130.00 surcharge fee; a declaration signed by three of the four co-inventors; the $130.00 petition fee; and a declaration of Mr. Kouji Tsuchiya ("Tsuchiya Decl.")

On 06 February 2001, applicants submitted via facsimile a copy of the documents filed 13 December 2000 and a stamped postcard receipt for those documents.

DISCUSSION

A petition under 37 CFR 1.47(a) must be accompanied by: (1) the required petition fee; (2) factual proof that the missing joint inventor refuses to execute the application or cannot be found or reached after diligent effort; (3) a statement of the last known address of the missing joint inventor; (4) and an oath or declaration executed by the signing joint inventor on his behalf and on behalf of the non-signing joint inventor.

The required petition fee of $130.00 as set forth in 37 CFR 1.17(i) has been submitted. The last known address of the omitted inventor, Mr. Kei Nakajima, is listed as 19-20, Suite 511, Chuo-Rinkan 3-chome, Yamatoshi, Kanagwa, Japan. Thus, items (1) and (3) of 37 CFR 1.47(a) are satisfied.

Regarding item (2), applicants included a declaration signed by Mr. Kouji Tsuchiya of the Intellectual Property Department of Sega Corporation ('Sega"), who states that he has "first hand knowledge" of the circumstances recited therein. Tsuchiya Decl. ¶ 1. Mr. Tsuchiya claims that upon learning that Mr. Nakajima no longer worked at Sega, he retrieved Mr. Nakajima's address and telephone number from the Personnel Division and "[b]efore sending the application papers (specification, drawings and declaration)," attempted to call him, but "the number was not already used." Id. at ¶ 6. Then, Mr. Tsuchiya claims that he "sent a letter by mail to ask for executing the declaration to each of the above addresses on October 18, 2000," but that "the letters were returned to me on October 23, 2000." Id. at ¶¶ 7-8. Mr. Tsuchiya elaborated further stating that on the returned envelopes, "the post office indicated that Mr. Nakajima was not found in the address and that his new address was not available to the post office." Id. at ¶ 9. Mr. Tsuchiya said that he "asked the Development Division for any information to reach Mr. Nakajima," but noone had any further information concerning how to contact the missing co-inventor. Id. at ¶¶ 10-11.

Applicants' burden in proving that an inventor cannot be located is explained in section 409.03(d) of the MPEP which states, in part:

> Where inability to find or reach a nonsigning inventor 'after diligent effort' is the reason for filing under 37 CFR 1.47, an affidavit or declaration of the facts should be submitted that fully describes the exact facts which are relied on to establish that a diligent effort was made . . .
>
> The affidavit or declaration of facts must be signed, where at all possible, by a person having firsthand knowledge of the facts recited therein. Statements based on hearsay will not normally be accepted. **Copies of documentary evidence such as certified mail return receipt, cover letter of instructions, telegrams, etc., that support a finding that the nonsigning inventor could not be found or reached should be made part of the affidavit or declaration.** It is important that the affidavit or declaration contain statements of fact as opposed to conclusions. (Emphasis added).

The evidence provided is not sufficient to satisfy the requirements of item (2) of 37 CFR 1.47(a). Specifically, documentary evidence discussed in the declaration of Mr. Tsuchiya was not provided. Mr. Tsuchiya discusses sending mail to Mr. Nakajima and having it returned annotated by the post office, but applicants have not provided copies

of such documentary evidence as required above. Applicants must submit any copies of relevant documentary evidence to confirm that a diligent attempt was made to contact Mr. Nakajima. It is also noted that if the evidence is not in English, it must be accompanied by a proper English translation.

Hence, item (2) is not yet satisfied.

Concerning item (4), applicants submitted a declaration signed by three of the five listed inventors, Takao Miyoshi, Yuji Naka, and Shiro Maekawa with the instant petition. The three inventors' names, residences, post office addresses and citizenship are typed on the declaration. In addition, the name, residence, post office address and citizenship of the nonsigning inventor, Mr. Nakajima was listed and left blank as required. However, the name of inventor Katsumi Yabuno was not listed on the declaration. Therefore, the declaration is not acceptable.

Thus, item (4) is also not satisfied.

CONCLUSION

The petition under 37 CFR 1.47(a) is **DISMISSED** without prejudice.

If reconsideration on the merits of this petition is desired, a proper response must be filed within **TWO (2) MONTHS** from the mail date of this decision. Extensions of time may be obtained under 37 CFR 1.136(a).

Please direct further correspondence with respect to this matter to the Assistant Commissioner for Patents, Box PCT, Washington, D.C. 20231, and address the contents of the letter to the attention of the PCT Legal Office.

Leonard Smith
PCT Legal Examiner
PCT Legal Office

James Thomson
PCT Legal Attorney
PCT Legal Office

Tel.: (703) 308-6457

JAN 3 1 2002

UNITED STATES PATENT AND TRADEMARK OFFICE

Commissioner for Patents
United States Patent and Trademark Office
Washington, D.C. 20231
www.uspto.gov

FINNEGAN, HENDERSON, FARABOW, GARRETT & DUNNER, LLP
1300 I Street, NW
Washington, D.C. 20005-3315

In re Application of NAKAJIMA, Kei *et al* U.S. Application No.: 09/554,065 PCT No.: PCT/JP98/05057 Int. Filing Date: 10 November 1998 Priority Date: 10 November 1997 Attorney Docket No.: 05905.0108 For: CHARACTER COMMUNICATION DEVICE	DECISION ON PETITION UNDER 37 CFR 1.47(a)

This is a decision on applicants' "Response to Decision on Applicants' Petition Under 37 C.F.R. §1.47(a)" ("Ren.Pet.") filed 11 December 2001.

BACKGROUND

On 11 May 2001, a decision dismissing applicants' petition under 37 CFR 1.47(a) was mailed because applicants failed to meet the requirements of item (2) and item (4) of 37 CFR 1.47(a).

On 11 December 2001, applicants filed the instant renewed petition which was accompanied by, *inter alia*, a petition for a five-month extension of time and fee of $1,960.00; a declaration signed by four of the five inventors; a declaration of Mr. Kouji Tsuchiya written in Japanese and English; and various copies of documentary evidence in support of applicants' claim that a diligent effort was made to locate Mr. Nakajima.

DISCUSSION

In the initial petition, applicants failed to fully satisfy item (2) and (4). Applicants failed to satisfy item (2) of 37 CFR 1.47(a) because documentary evidence discussed in the declaration of Mr. Tsuchiya showing the attempts applicants made to contact Mr. Nakajima was not provided. In the renewed petition, applicants have submitted copies of two letters sent by Mr. Tsuchiya to Mr. Nakajima with accompanying English translations. These letters were sent to the last known address of Mr. Nakajima and Mr. Nakajima's parents respectively. Ren.Pet. ¶ 4. Applicants also submitted copies of emails with accompanying English translations "sent to colleagues of Mr. Nakajima requesting an address for Mr. Nakajima." Id. at ¶ 5. Finally, applicants submitted "a copy of an Interoffice Circulate (and accompanying English language translation) sent to the Personnel Division of Mr. Nakajima's employer requesting Mr. Nakajima's address." The last known address of Mr. Nakajima previously submitted was the response received. Id.

A review of the documents provided support applicants claim that a diligent effort was made to locate Mr. Nakajima. Accordingly, item (2) is satisfied.

Applicants failed to satisfy item (4) in the initial petition because they submitted a declaration signed by only three of the five listed co-inventors in the initial petition. The name of co-inventor Katsumi Yabuno was not listed on the declaration. The declaration was deemed not acceptable.

In the renewed petition, counsel states that "[a]pplicants submit herewith a Japanese language Declaration (PTO/SB/106)(5 pages) executed by the four available co-inventors." Id. at ¶ 7. A review of the declaration provided in the renewed petition shows that all five co-inventors recorded on the international publication are listed as co-inventors. Regardless, the declaration still does not comply with 37 CFR 1.497.

The first two pages of the declaration are listed as "Page 1 of 3" and "Page 2 of 3" respectively. But there appears to be at least two more pages in the declaration listing the five co-inventors. In addition, applicants submitted what appears to be parts of at least two different declarations. The fourth page of the declaration listing the third, fourth, and fifth inventor has been submitted twice. Applicants must submit a copy of the complete declaration signed by each inventor which in this case would require an additional page one, two, and three of the declaration. While each inventor need not execute the same oath or declaration, each oath or declaration executed by an inventor must contain a complete listing of all inventors so as to clearly indicate what each inventor believes to be the appropriate inventive entity. In this case, there is no indication whether every inventor was aware of the other co-inventors listed on the declaration.

Thus, the declaration submitted is not in compliance with 37 CFR 1.497(a)(3) in that it does not properly identify each inventor. Item (4) is still not satisfied.

Accordingly, all the requirements of 37 CFR 1.47(a) are not yet complete.

CONCLUSION

The renewed petition under 37 CFR 1.47(a) is **DISMISSED** without prejudice.

If reconsideration on the merits of this petition is desired, a proper response must be filed within **TWO (2) MONTHS** from the mail date of this decision. Any reconsideration request should include a cover letter entitled "Renewed Petition Under 37 CFR 1.47(a)." No additional petition fee is required.

Any further correspondence with respect to this matter should be addressed to the Assistant Commissioner for Patents, Box PCT, Washington, D.C. 20231, with the

contents of the letter marked to the attention of the PCT Legal Office.

Richard Cole
PCT Legal Examiner
PCT Legal Office

James Thomson
Attorney Advisor
PCT Legal Office

Tel.: (703) 308-6457

MAY 2 [illegible] 2

UNITED STATES PATENT AND TRADEMARK OFFICE

Commissioner for Patents
United States Patent and Trademark Office
Washington, D.C. 20231
www.uspto.gov

FINNEGAN, HENDERSON, FARABOW, GARRETT & DUNNER, LLP
1300 I Street, NW
Washington, D.C. 20005-3315

In re Application of NAKAJIMA, Kei *et al* U.S. Application No.: 09/554,065 PCT No.: PCT/JP98/05057 Int. Filing Date: 10 November 1998 Priority Date: 10 November 1997 Attorney Docket No.: 05905.0108 For: CHARACTER COMMUNICATION DEVICE	**DECISION ON RENEWED PETITION UNDER 37 CFR 1.47(a)**

This is a decision on applicants' "Renewed Petition Under 37 C.F.R. §1.47" filed 01 April 2002.

BACKGROUND

On 31 January 2002, a decision dismissing applicants' petition was mailed because applicants failed to meet the requirements of item (4) of 37 CFR 1.47(a).

On 01 April 2002, applicants filed the instant renewed petition which was accompanied by, a declaration signed by four of the five inventors.

DISCUSSION

In the initial petition filed 13 December 2000, applicants failed to satisfy item (4) because they submitted a declaration signed by three of the five listed co-inventors. The name of co-inventor Katsumi Yabuno was not listed on the declaration.

In the renewed petition filed 11 December 2001, applicants failed to satisfy item (4) because they did not provide a complete declaration for each inventor that was in compliance with 37 CFR 1.497.

In the instant petition, applicants submitted two complete declarations signed by four of the five listed inventors and meeting the requirements of item (4) of 37 CFR 1.47(a) and 37 CFR 1.497.

Accordingly, all the requirements of 37 CFR 1.47(a) are complete.

CONCLUSION

Applicants' renewed petition under 37 CFR 1.47(a) is **GRANTED**.

Applicants have completed the requirements for acceptance under 35 U.S.C. 371(c). The application has an international filing date of 10 November 1998 under 35 U.S.C. 363, and a 35 U.S.C. 371 date of 01 April 2002.

As provided in 37 CFR 1.47(a), a notice of the filing of this application will be forwarded to the non-signing inventor at his last known address of record and will be published in the Official Gazette.

This application is being forwarded to the National Stage Processing Division of the Office of PCT Operations for continued processing.

Boris Milef
PCT Legal Examiner
PCT Legal Office

James Thomson
Attorney Advisor
PCT Legal Office

Tel.: (703) 308-6457

UNITED STATES PATENT AND TRADEMARK OFFICE

Commissioner for Patents
United States Patent and Trademark Office
Washington, D.C. 20231
www.uspto.gov

OFFICIAL GAZETTE NOTICE

37 CFR 1.47 Notice by Publication

Notice is hereby given of the filing of a national stage application with a petition under 37 CFR 1.47 requesting acceptance of the application without the signature of all of the inventors. The petition has been granted. A notice has been sent to the last known address of the non-signing inventor. The inventor whose signature is missing (Kei Nakajima) may join in the application by promptly filing an appropriate oath or declaration complying with 37 CFR 1.63. The international application number is PCT/JP98/05057 and was filed on 10 November 1998 in the names of Kei Nakajima, Takao Miyoshi, Yuji Naka, Shiro Maekawa and Katsumi Yabuno for the invention entitled Character Communication Device. The national stage application is assigned number 09/554,065 and has a 35 U.S.C. 371 date of 01 April 2002.

UNITED STATES PATENT and TRADEMARK OFFICE

COMMISSIONER FOR PATENTS
UNITED STATES PATENT AND TRADEMARK OFFICE
P.O.Box 1450
Alexandria, VA 22313-1450
WWW.USPTO.GOV

Mailed: AUG 27 2003

rvk
Paper Number: 24

In re application of
Miroslav Chmelir et al.
Serial No. 09/554,090
Filed: June 14, 2000
For: METHOD FOR PRODUCING WATER-SOLUBLE OR WATER-SWELLABLE POLYMERIZATES WITH A VERY LOW RESIDUAL MONOMER CONTENT, PRODUCTS PRODUCED ACCORDING TO THIS METHOD AND THE USE THEREOF

DECISION ON PETITION

This is a response to the "PETITION TO WITHDRAWAL OF HOLDING OF ABANDONMENT", filed June 9, 2003. The petition requests that the abandonment, as set forth in the Notice of Abandonment of May 13, 2003, for failure to timely file a proper response to the Decision by the Board of Patent Appeals and Interferences rendered on April 23, 2003 be withdrawn. The petitioner asserts that the abandonment was prematurely issued and applicants had filed a Request for Continuous Examination (RCE) on June 23, 2003.

DECISION

The instant request is accepted as a timely petition under 37 C.F.R. 1.181 (no fee). A review of the instant application file indicates that the Notice Of Abandonment of May 13, 2003 was prematurely prepared by the Examiner and mailed, when in fact the applicants had until June 23, 2003 to seek Court review of the Decision. Therefore, when the Notice of Abandonment of May 13, 2003 was mailed the instant application was not in fact abandoned. A review of the USPTO application file indicates that a Request for Continuous Examination (RCE) accompanied with a preliminary amendment under 37 CFR 1.114(a)(3) was filed on June 23, 2003.

Therefore, the abandonment is hereby withdrawn, and the application is returned to

pending status. The case will be forwarded to the Technical Support Staff for entering the RCE and then forwarded to the examiner for prompt consideration.

The Petition is **GRANTED**.

Jmstone

Jacqueline Stone, Director
Technology Center 1700
Chemical and Materials Engineering

OBLON, SPIVAK, MCCLELLAND, MAIER & NEUSTADT, P.C.
1940 DUKE STREET
ALEXANDRIA, VA 22314

UNITED STATES PATENT AND TRADEMARK OFFICE

COMMISSIONER FOR PATENTS
UNITED STATES PATENT AND TRADEMARK OFFICE
WASHINGTON, D.C. 20231
www.uspto.gov

#20
11/20/02

Paper No. 20

Robert E. Krebs
Thelen Reid & Priest LLP
P.O. Box 640640
San Jose, CA 95164-0640

COPY MAILED

NOV 2 0 2002

OFFICE OF PETITIONS

In re Application of :
Yves Fouillet :
Application No. 09/554,272 :
Filed: June 6, 2000 :
Attorney Docket No. 034299-245 :

ON PETITION

This is a decision on the petition under 37 CFR 1.137(b), filed October 29, 2002, to revive the above-identified application.

The petition is **GRANTED**.

The above-identified application became abandoned for failure to reply within the meaning of 37CFR 1.113 in a timely manner to the final Office action mailed March 14, 2002, which set a shortened statutory period for reply of three (3) months. A three (3) months extension of time under the provisions of 37 CFR 1.136(a) was obtained. Accordingly, the application became abandoned on September 15, 2002.

Telephone inquiries concerning this decision should be directed to Cheryl Gibson-Baylor at (703)308-5111, or in her absence, Sherry Brinkley at (703)305-9220.

The application file is being forwarded to Technology Center 2800, Art Unit 2835 for processing the Request for Continued Examination under 37 CFR 1.114, filed on October 29, 2002.

Cheryl Gibson-Baylor
Petitions Examiner
Office of Petitions
Office of the Deputy Commissioner
for Patent Examination Policy

Sherry Brinkley
Petitions Examiner

21 SEP 2004

UNITED STATES PATENT AND TRADEMARK OFFICE

Commissioner for Patents
United States Patent and Trademark Office
P.O. Box 1450
Alexandria, VA 22313-1450
www.uspto.gov

Brett A. Valiquet
SCHIFF HARDIN & WAITE
6600 Sears Tower
Chicago, Illinois 60606-6473

In re Application of	:	
Rainer ROHM, et al.	:	
Application No.: 09/554,294	:	DECISION ON
PCT No.: PCT/DE99/01394	:	PETITION
Int. Filing Date: 07 May 1999	:	UNDER 37 CFR 1.181
Priority Date: 11 may 1998	:	
Attorney Docket No.: P00.0960	:	
For: SYSTEM FOR EQUIPPING	:	
COMPONENT CARRIERS WITH	:	
ELECTRICAL COMPONENTS	:	

This decision is in response to the "STATUS INQUIRY" filed 01 September 2004 and the "PETITION TO WITHDRAW ABANDONMENT" filed 16 April 2001. Both communications are being treated as a petition under 37 CFR 1.181 for withdrawal of the Notification of Abandonment mailed by the Office on 26 March 2001. No petition fee is necessary.

DISCUSSION

A review of the application file reveals that the two executed declarations of the inventors were received in the Office on 30 January 2001. Accordingly, the Notification of Abandonment of 26 March 2001 indicating that "Applicant has failed to respond to the notification of MISSING REQUIREMENTS mailed 6 JUNE 2000" was issued in error and is hereby VACATED.

A review of the declarations of the inventors filed with the petition indicates that they are in compliance with 37 CFR 1.497 and 1.63.

DECISION

In view of the discussion above, the petition under 37 CFR 1.181 requesting withdrawal of the holding of abandonment of the present application is GRANTED.

The application is being returned to the DO/EO/US for further processing in

accordance with this decision, that is, a) for issuance of a Notification of Acceptance (Form PCT/DO/EO/903) with a 35 U.S.C. 371(1), (c)(2) and (c)(4) and 102(e) date of **30 January 2001**, and b) for preparation and mailing of a filing receipt.

Leonard E. Smith
PCT Legal Examiner
PCT Legal Office

Nguyên Ngoc-Hô
Paralegal Specialist
PCT Legal Office

NNH/LES:hn

Tel: (703) 308-6508

UNITED STATES PATENT AND TRADEMARK OFFICE

COMMISSIONER FOR PATENTS
UNITED STATES PATENT AND TRADEMARK OFFICE
P.O. BOX 1450
ALEXANDRIA, VA 22313-1450
www.uspto.gov

APR 26 2004

In re Application of	:	
Daniel J. Kyck	:	NOTICE OF WITHDRAWAL
Serial No. 09/554,295	:	FROM ISSUE
Filed: August 7, 2000	:	UNDER 37 CFR 1.313(b)
For: CHEWING GUM FORMULATIONS	:	
INCLUDING ASPARTAME AND SODIUM	:	
BICARBONATE	:	

The above-identified application is withdrawn from issue after payment of the issue fee due to reopening of prosecution. See 37 CFR 1.313 (b).

The above-identified application is hereby withdrawn from issue.

The issue fee is refundable upon written request. If, however, the application is again found allowable, the issue fee can be applied toward payment of the issue fee in the amount identified on the new Notice of Allowance and Issue Fee Due upon written request. This request and any balance due must be received on or before the due date noted in the new Notice of Allowance in order to prevent abandonment of the application.

Telephone inquiries should be directed to Milton Cano at (571) 272-1398.

The above-identified application is being forwarded to the examiner for prompt appropriate action, including notifying applicant of the new status of this application.

Jacqueline Stone, Director
Technology Center 1700
Chemical and Materials Engineering

Robert M. Barrett
Bell, Boyd & Lloyd, L.L.C.
Three First National Plaza
70 West Madison Street, Suite 3300
Chicago, IL 60602-4207

cc: Allowed Files—Pk3-910

To: Director 1700

From: Arthur Corbin

Date: April 14, 2004

It is hereby requested that Serial No. 09/554,295 be withdrawn from issue for the purpose of applying U.S. Patent 5,433,690(Meyers) against claims 1-20. Meyers would be applied under 35 USC 102(e) against claims 1,3,7 and 8 and under 35 USC 103 against claims 2,4-6 and 9-20.

ARTHUR L. CORBIN
PRIMARY EXAMINER

UNITED STATES PATENT AND TRADEMARK OFFICE

COMMISSIONER FOR PATENTS
UNITED STATES PATENT AND TRADEMARK OFFICE
P.O. BOX 1450
ALEXANDRIA, VA 22313-1450
www.uspto.gov

GREENBLUM & BERNSTEIN, P.L.C.
1950 ROLAND CLARKE PLACE
RESTON VA 20191

COPY MAILED

MAY 16 2006

OFFICE OF PETITIONS

In re Application of
Saathoff et al.
Application No. 09/554,343
International Filing Date: September 14, 1997
For: Motor-Driven Screw Driver

: Decision on Petition for
: Patent Term Extension

The above-identified application has been forwarded to the undersigned for consideration on a petition for patent term extension entitled "Petition Under 37 CFR 1.181 to Review and Correct the Determination of the Length of Patent Term Extension Under 37 CFR 1.701," received on September 12, 2005.

The petition is GRANTED.

Petitioner notes that the Notice of Allowance dated June 13, 2005, in the above-identified application incorrectly stated that the patent term extension was 56 days. Petitioner argues that applicant is entitled to 503 days of patent term extension, not the 56 days of extension as stated in the Notice of Allowance.

A Notice of Appeal was filed in the above-identified application on August 29, 2002. On January 30, 2004, the Board of Appeals and Interferences affirmed-in-part the decision of the examiner in the above-identified application. Since the above-identified application was filed after June 7, 1995, there is no terminal disclaimer due to the issue of another patent claiming subject matter that is not patentably distinct from that under appellate review, and issuance of the application as a patent was delayed due to appellate review resulting in a reversal of an adverse decision of patentability, the patent to issue from the application is entitled to an extension of the patent term. The period of delay in the above-identified application is the period beginning on August 29, 2002, the date that the Notice of Appeal was filed and ending on January 30, 2004, the date of the final decision in favor of the applicant. Three years after the earliest effective filing date of the application is September 14, 2002. Accordingly, the period of extension is required to be reduced pursuant to 37 CFR 1.701(d)(1) by the amount of time prior to three years after the filing date of the application. As a result, the period of extension is 504 days, the period from September 14, 2002 to January 30, 2004, including the beginning and end dates.

After mailing of this decision, the above-identified application will be forwarded to Office of Publications for further processing. The patent, if issued, will include an indication that the patent term is extended by **504 days**

Petitioner's deposit account has not been charged a petition fee.

Telephone inquiries with regard to this communication should be directed to Mark O. Polutta at (571) 272-7709.

Mark O. Polutta
Senior Legal Advisor
Office of Patent Legal Administration
Office of the Deputy Commissioner
for Patent Examination Policy

UNITED STATES PATENT AND TRADEMARK OFFICE

03 OCT 2005

Commissioner for Patents
United States Patent and Trademark Office
P.O. Box 1450
Alexandria, VA 22313-1450
www.uspto.gov

KAREN L. ELBING
CLARK & ELBING LLP,
101 FEDERAL STREET
BOSTON MA 02110

In re Application of	:	
TRAU, Mathias et al.	:	DECISION ON
Application No.: 09/554,376	:	
Filing Date: 11 May 2000	:	PETITION
Attorney Docket No.: 50257/002001	:	
For: CARRIER-REPORTER BEAD	:	UNDER 37 CFR 1.182
ASSEMBLIES	:	

This decision is in response to applicants' "Petition 37 CFR §1.182 to Convert a National Application Filed Under 35 USC §371 to an Application Filed Under 35 USC §111(a)," filed on 21 December 2004.

BACKGROUND

On 12 November 1998, applicants filed international application PCT/AU98/00944, which claimed a priority date of 12 November 1997. On 30 April 1999, applicants filed a demand for international preliminary examination. Accordingly, the thirty-month period for paying the basic national fee in the United States expired at midnight on 12 May 2000.

On 11 May 2000, applicants filed a continuation-in-part (CIP) application, which was accompanied by, *inter alia*, basic national fee and a preliminary amendment.

On 05 July 2000, the Office mailed Notification of Missing Requirements (Form PCT/DO/EO/905) indicating that an oath or declaration and the surcharge for late filing of the oath or declaration were required.

On 04 January 2001, applicants submitted a declaration accompanied by the fee for a five month extension of time.

On 16 May 2001, the Office mailed a second Notification of Missing Requirements (Form PCT/DO/EO/905) requiring a sequence listing.

On 16 July 2001, applicants submitted the required sequence listing.

On 09 October 2001, the Office mailed Notification of Acceptance (Form PCT/DO/EO/903) indicating that the application had a 35 USC 371(c)(1), (c)(2) and (c)(4) date of 04 January 2001.

On 22 December 2003, applicants filed the instant petition to convert.

DISCUSSION

This decision is in response to applicants' petition filed on 22 December 2003 requesting to convert the above-captioned application to a 35 USC 111(a) application from a national stage application of PCT/AU98/00944.

A review of the above-captioned application file indicates it should have been processed under 35 U.S.C. 111(a). The USPTO Notice published in the Official Gazette at 1077 OG 13 entitled "Minimum Requirements for Acceptance of Applications Under 35 U.S.C. 371 (the National Stage of PCT)" states, in part, the following:

> The Patent and Trademark Office is continuing to receive application papers which do not clearly identify whether the papers (1) are being submitted to enter the national stage of the Patent Cooperation Treaty (PCT) under 35 U.S.C. 371 or (2) are being filed as a regular national application under 35 U.S.C. 111 . . .

If there are any conflicting instructions as to which sections of the statute (371 or 111) is intended the application will be accepted under 35 U.S.C. 111.

Here, the statement in the preliminary amendment that the application is a continuation-in-part is an instruction to process the application pursuant to 35 U.S.C. 111(a). Thus, the application will be accepted as a filing under 35 U.S.C. 111(a) pursuant to 1077 OG 13.

CONCLUSION

As discussed above, the petition under 37 CFR 1.182 is **GRANTED**.

The Notifications of Missing Requirements mailed 05 July 2000 and 16 May 2001 are **VACATED**.

The Notification of Acceptance mailed 09 October 2001 is **VACATED**.

This application is being forwarded to the National Stage Processing Branch of the International Division for processing in accordance with this decision, that is for (1) removal of the papers communicated from the International Bureau to the United States Patent and Trademark Office concerning international application PCT/AU98/00944 and (2) correction of information in PALM (computer database). Afterwards, the application will be forwarded to the Office of Initial Patent Examination for processing as a national application filed under 35 U.S.C. §111(a) with a filing date of **11 May 2000**.

Erin P. Thomson

Erin P. Thomson
Attorney Advisor
PCT Legal Administration

Telephone: (571)272-3292
Facsimile: (571)273-0459

UNITED STATES PATENT AND TRADEMARK OFFICE

Commissioner for Patents
United States Patent and Trademark Office
P.O. Box 1450
Alexandria, VA 22313-1450
www.uspto.gov

SUGHRUE MION ZINN
MACPEAK & SEAS
SUITE 800
2100 PENNSYLVANIA AVENUE NW
WASHINGTON, DC 20037-3213

COPY MAILED

MAY 0 9 2005

OFFICE OF PETITIONS

In re Application of	:	
Andrey Leonidovich Rog, et al.	:	
Application No. 09/554,392	:	ON PETITION
Filed: June 6, 2000	:	
Attorney Docket No. Q59083	:	

This is a decision on the petition under 37 CFR 1.137(b), filed October 27, 2004, to revive the above-identified application.

The petition is **GRANTED.**

The above-identified application became abandoned for failure to reply in a timely manner to the non-final Office action mailed November 10, 2003, which set a shortened statutory period for reply of three (3) months. No extensions of time under the provisions of 37 CFR 1.136(a) were obtained. Accordingly, the application became abandoned on February 11, 2004.

Telephone inquiries concerning this decision should be directed to the undersigned at (571) 272-3229.

The application matter is being referred to Technology Center 2600, Art Unit 2634 for further processing.

Retta Williams

Retta Williams
Petitions Examiner
Office of Petitions
Office of the Deputy Commissioner
for Patent Examination Policy

UNITED STATES PATENT AND TRADEMARK OFFICE

COMMISSIONER FOR PATENTS
UNITED STATES PATENT AND TRADEMARK OFFICE
WASHINGTON, D.C. 20231
www.uspto.gov

Paper No. ~~11~~ 12

Aaron Wininger
CARR & FERRELL
2225 East Bayshore Road
Suite 200
Palo Alto, CA 94303

MAILED

NOV - 7 2002

Technology Center 2100

In re Application of: Lynn D. Spraggs	)	
Application No. 09/554,419	)	
Filed: May 11, 2000	)	
For: SYSTEM AND METHOD OF SENDING AND RECEIVING SECURE DATA WITH A SHARED KEY	)	**DECISION ON REQUEST FOR WITHDRAWAL AS ATTORNEY**

This is a decision on the Request To Withdraw from Representation filed November 5, 2002.

A grantable request to withdraw as attorney of record should indicate thereon the present mailing addresses of the attorney(s) who is/are withdrawing from the record and of the applicant. The request for withdrawal must be signed by every attorney seeking to withdraw or contain a clear indication that one attorney is signing on behalf of another/others. A request to withdraw will not be approved unless at least 30 (thirty) days would remain between the date of approval and the later of the expiration date of a time to file a response or the expiration date of the maximum time period which can be extended under 37 C.F.R. § 1. 136(a). The effective date of withdrawal being the date of decision and not the date of request. See M.P.E.P. § 402.06. 37 C.F.R. § 1.36 further requires that the applicant or patent owner be notified of the withdrawal of the attorney or agent.

The request is **GRANTED**.

All future communications from the Office will be directed to the below-listed address until otherwise notified by applicant. This correspondence address is provided by the withdrawn attorney(s). Applicant is reminded of the obligation to promptly notify the Patent and Trademark Office (Office) of any change in correspondence address to ensure receipt of all communications from the Office.

FOR

Vincent N. Trans
Special Programs Examiner
Technology Center 2100
Computer Architecture and Software
(703) 305-9750

cc: Dr. Lynn Spraggs
Ultra Information Systems
8604 Kalavista Dr.
Vernon, BC
V1B 1K3, Canada

UNITED STATES PATENT AND TRADEMARK OFFICE

COMMISSIONER FOR PATENTS
UNITED STATES PATENT AND TRADEMARK OFFICE
P.O. BOX 1450
ALEXANDRIA, VA 22313-1450
WWW.USPTO.GOV

Paper No. 15

Dr. Lynn Spraggs
Ultra Information Systems
8604 Kalavista Dr.
Vernon, BC V1B 1K3
CANADA

COPY MAILED

MAY 19 2003

OFFICE OF PETITIONS

In re Application of
Spraggs
Application No. 09/554,419
Filed: May 11, 2000
Attorney Docket No. PA1065US
For: SYSTEM AND METHOD OF SENDING AND RECEIVING SECURE DATA WITH A SHARED KEY

ON PETITION

This is a decision on the petition under 37 CFR 1.137(a), filed April 8, 2003, to revive the above-identified application.

The petition under 37 CFR 1.137(a) is **DISMISSED**.

Any further petition to revive the above-identified application must be submitted within TWO (2) MONTHS from the mail date of this decision. Extensions of time under 37 CFR 1.136(a) are permitted. The reconsideration request should include a cover letter entitled "Petition under 37 CFR 1.137." This is **not** final agency action within the meaning of 5 U.S.C. § 704.

The above-identified application became abandoned for failure to properly reply to the final Office action, mailed July 3, 2002. Petitioner filed an amendment after final on October 21, 2002 (certificate of mailing date September 27, 2002). The amendment after final failed to place the above-identified application in *prima facie* condition for allowance, as was stated in the October 30, 2002 Advisory Action. This application became abandoned on October 4, 2002. On November 7, 2002, the Office granted a request by the attorneys of record to withdraw from representation. On January 21, 2003, a Notice of Abandonment was mailed.

A grantable petition to revive an abandoned application under 37 CFR 1.137(a) must be accompanied by (1) the required reply, unless previously filed. In a nonprovisional application abandoned for failure to prosecute, the required reply may be met by the filing of a continuing application. In an application or patent, abandoned or lapsed for failure to pay the issue fee or any portion thereof, the required reply must be the payment of the issue fee or any outstanding balance thereof; (2) the petition fee as set forth in § 1.17(l); (3) a showing to the satisfaction of the Commissioner that the entire delay in filing the required reply from the due date for the reply until the filing of a grantable petition pursuant to this paragraph was unavoidable; and (4) any terminal disclaimer (and fee as set forth in § 1.20 (d)) required pursuant to paragraph (c) of this section. This petition does not satisfy requirements (1) and (3).

Regarding (1) above, petitioner has not filed a proper reply. The amendment after final, filed October 21, 2002 (certificate of mailing date September 27, 2002), did not eliminate all of the Examiner's objections and rejections. It did not place the case in *prima facie* condition for allowance. In any reconsideration petition, petitioner must submit one of the following: (1) a Notice of Appeal, (2) a continuing application, or (3) an RCE and submission.

Regarding (3), the showing of record is inadequate to establish unavoidable delay within the meaning of 37 CFR 1.137(a). Specifically, an application is "unavoidably" abandoned only where

petitioner, or counsel for petitioner, takes all action necessary for a proper response to the outstanding Office action, but through the intervention of unforeseen circumstances, such as failure of mail, telegraph, telefacsimile, or the negligence of otherwise reliable employees, the response is not timely received in the Office. Ex parte Pratt, 1887 Dec. Comm'r Pat. 31 (Comm'r Pat. 1887).

The Commissioner may revive an abandoned application if the delay in responding to the relevant outstanding Office requirement is shown to the satisfaction of the Commissioner to have been "unavoidable". 35 USC § 133. Decisions on reviving abandoned applications have adopted the reasonably prudent person standard in determining if the delay was unavoidable. Ex parte Pratt, 1887 Dec. Comm'r Pat. 31, 32-33 (Comm'r Pat. 1887)(the term 'unavoidable' "is applicable to ordinary human affairs, and requires no more or greater care or diligence than is generally used and observed by prudent and careful men in relation to their most important business"); In re Mattullath, 38 App. D.C. 497, 514-15 (D.C. Cir. 1912); Ex parte Henrich, 1913 Dec. Comm'r Pat. 139, 141 (Comm'r Pat. 1913). In addition, decisions on revival are made on a "case-by-case basis, taking all the facts and circumstances into account." Smith v. Mossinghoff, 671 F.2d 533, 538, 213 USPQ 977, 982 (D.C. Cir. 1982). Finally, a petition to revive an application as unavoidably abandoned cannot be granted where a petitioner has failed to meet his or her burden of establishing the cause of the unavoidable delay. Haines v. Quigg, 673 F. Supp. 314, 5 USPQ2d 1130 (N.D. Ind. 1987).

In the instant case, petitioner has failed to provide adequate evidence that the delay was unavoidable. Petitioner asserts that the entire delay was caused by the former attorneys of record withdrawing during the period that a critical filing was due.

Petitioner is reminded that under 37 CFR 1.36 and MPEP 402.06, attorneys may withdraw from representation as long as there is at least thirty (30) days remaining between the date of approval of the request and the later of the expiration date of a period to file a reply to an outstanding Office requirement or the expiration date of the maximum period for extension under 37 CFR 1.136(a).

In the instant case, the Office granted the former attorneys request to withdraw from representation on November 7, 2002. Petitioner could have bought extensions of time to reply to the July 3, 2002 final Office action until January 3, 2003, but petitioner did not do so.

Even after petitioner's attorneys withdrew from representation, it remained petitioner's responsibility to continue prosecution.

Petitioner's Amendment After Final, filed October 21, 2002 (certificate of mailing date September 27, 2002), failed to eliminate all of the Examiner's objections and rejections, as was stated in the Advisory Opinion of October 30, 2002. The rules of practice are clear that prosecution of an application to save it from abandonment must include such complete and proper action as the condition of the case may require. The admission of an amendment not responsive to the last Office action, or refusal to admit the same, shall not operate to save the application from abandonment. See 37 CFR 1.116(a).

The application became abandoned because petitioner/petitioner's representatives did not submit a proper reply to the final Office action within the extendable period for reply.

A delay resulting from the lack of knowledge or improper application of the patent statute, rules of practice or the MPEP does not constitute an "unavoidable" delay. See Haines v. Quigg, 673 F. Supp. 314, 317, 5 USPQ2d 1130, 1132 (N.D. Ind. 1987), Vincent v. Mossinghoff, 230 USPQ 621, 624 (D.D.C. 1985); Smith v. Diamond, 209 USPQ 1091 (D.D.C. 1981); Potter v. Dann, 201 USPQ 574 (D.D.C. 1978); Ex parte Murray, 1891 Dec. Comm'r Pat. 130, 131 (1891).

The petition under 37 CFR 1.137(a) is dismissed.

ALTERNATIVE VENUE

Petitioner should consider filing a petition stating that the delay was unintentional. Public Law 97-247, § 3, 96 Stat. 317 (1982), which revised patent and trademark fees, amended 35 U.S.C. § 41(a)(7) to provide for the revival of an "unintentionally" abandoned application without a showing that the delay in prosecution or in late payment of an issue fee was "unavoidable." This amendment to 35 U.S.C. § 41(a)(7) has been implemented in 37 CFR 1.137(b). An "unintentional" petition under 37 CFR 1.137(b) must be accompanied by the $ 650.00 petition fee.

The filing of a petition under 37 CFR 1.137(b) cannot be intentionally delayed and therefore must be filed promptly. A person seeking revival due to unintentional delay can not make a statement that the delay was unintentional unless the entire delay, including the delay from the date it was discovered that the application was abandoned until the filing of the petition to revive under 37 CFR 1.137(b), was unintentional. A statement that the delay was unintentional is not appropriate if petitioner intentionally delayed the filing of a petition for revival under 37 CFR 1.137(b). For petitioner's convenience, a blank copy of PTO/SB/64 -- Petition for Revival of an Application for Patent Abandoned Unintentionally under 37 CFR 1.137(b) is enclosed.

Further correspondence with respect to this matter should be addressed as follows:

By mail:	Mail Stop PETITION Commissioner for Patents P.O. Box 1450 Alexandria, VA 22313-1450
By facsimile:	(703) 308-6916 Attn: Office of Petitions
By hand:	Office of Petitions 2201 South Clark Place Crystal Plaza 4, Suite 3C23 Arlington, VA 22202

Telephone inquiries pertaining to this matter may be directed to the undersigned at (703) 308-6712.

E. Shirene Willis

E. Shirene Willis
Senior Petitions Attorney
Office of Petitions

enclosures: blank PTO/SB/64 -- Petition for Revival of an Application Abandoned Unintentionally under 37 CFR 1.137(b)

Privacy Act Statement

UNITED STATES PATENT AND TRADEMARK OFFICE

COMMISSIONER FOR PATENTS
UNITED STATES PATENT AND TRADEMARK OFFICE
P.O. BOX 1450
ALEXANDRIA, VA 22313-1450
WWW.USPTO.GOV

Paper No. 17

Dr. Lynn Spraggs
Ultra Information Systems
8604 Kalavista Dr.
Vernon, BC V1B 1K3
CANADA

COPY MAILED

JUL 0 8 2003

OFFICE OF PETITIONS

In re Application of
Spraggs
Application No. 09/554,419
Filed: May 11, 2000
Attorney Docket No. PA1065US
For: SYSTEM AND METHOD OF SENDING AND RECEIVING SECURE DATA WITH A SHARED KEY

ON PETITION

This is a decision on the petition under 37 CFR 1.137(b), filed June 30, 2003 via facsimile, to revive the above-identified application.

The petition under 37 CFR 1.137(b) is **DISMISSED**.

Any further petition to revive the above-identified application must be submitted within TWO (2) MONTHS from the mail date of this decision. Extensions of time under 37 CFR 1.136(a) are permitted. The reconsideration request should include a cover letter entitled "Petition under 37 CFR 1.137(b)." This is **not** final agency action within the meaning of 5 U.S.C. § 704.

The above-identified application became abandoned for failure to properly reply to the final Office action, mailed July 3, 2002. Petitioner filed an amendment after final on October 21, 2002 (certificate of mailing date September 27, 2002). The amendment after final failed to place the above-identified application in *prima facie* condition for allowance, as was stated in the October 30, 2002 Advisory Action. This application became abandoned on October 4, 2002. On November 7, 2002, the Office granted a request by the attorneys of record to withdraw from representation. On January 21, 2003, a Notice of Abandonment was mailed. Applicant's petition to revive under 37 CFR 1.137(a), filed April 8, 2003, was dismissed on May 19, 2003 for failure to submit a proper reply and failure to show that the entire delay in responding to the July 3, 2002 final Office action was unavoidable.

A grantable petition under 37 CFR 1.137(b) must be accompanied by: (1) the required reply, unless previously filed; (2) the petition fee as set forth in 37 CFR 1.17(m); (3) a statement that the entire delay in filing the required reply from the due date for the reply until the filing of a grantable petition pursuant to 37 CFR 1.137(a) was unintentional; and (4) any terminal disclaimer (and fee as set forth in 37 CFR 1.20(d)) required pursuant to 37 CFR 1.137(c).This petition lacks items (1) and (2).

Regarding (1) above, petitioner still has not filed a proper reply. The amendment after final, filed October 21, 2002 (certificate of mailing date September 27, 2002), did not eliminate all of the Examiner's objections and rejections. It did not place the case in *prima facie* condition for allowance. In any reconsideration petition, petitioner must submit one of the following: (1) a Notice of Appeal, (2) a continuing application, or (3) an RCE and submission.

Regarding (2) above, the small entity fee for filing a petition to revive an unintentionally abandoned application under 37 CFR 1.137(b) is set forth in 37 CFR 1.17(m) as $650. The payment of the petition fee is a prerequisite to the filing of a petition to revive under 37 CFR 1.137(b). This requirement cannot be waived. MPEP 711.03(c)(III)(B). A review of Office records indicates that petitioner only authorized the Office to charge $640 to her credit card.[1]

Petitioner is urged to submit $10.00 and an acceptable reply to the July 3, 2002 final Office action within two (2) months of the mail date of this decision.

Further correspondence with respect to this matter should be addressed as follows:

By mail: Mail Stop PETITION
Commissioner for Patents
P.O. Box 1450
Alexandria, VA 22313-1450

By facsimile: (703) 308-6916
Attn: Office of Petitions

By hand: Office of Petitions
2201 South Clark Place
Crystal Plaza 4, Suite 3C23
Arlington, VA 22202

Telephone inquiries pertaining to this matter may be directed to the undersigned at (703) 308-6712.

E Shirene Willis

E. Shirene Willis
Senior Petitions Attorney
Office of Petitions

[1] Petitioner is informed that it is Office policy to destroy credit card authorization forms after fees are charged to the credit card, due to security concerns. Petitioner must submit another credit card authorization if petitioner desires the Office to charge the $10 owed to her credit card.

#18

September 3, 2003

Attention: E. Shirene Willis
Senior Petitions Attorney

Application Number: 09/554,429
Application Filed: May 11, 2000
For: SYSTEM AND METHOD OF SENDING AND RECEIVING SECURE DATA WITH A SHARED KEY

FAX RECEIVED
SEP 0 3 2003
PETITIONS OFFICE

Application for revival due to unintentional delay

Please accept this letter as my request to have the above patent application reinstated. I have tried very hard to comply exactly with what has been asked of me and I hope, no, I pray, that I have done it right this time. This patent is very important to me and I have tried my best to meet the strict requirements that you adhere to.

If there are any problems, please contact me at your convenience so I can get this application back on track.

Thanking you in advance for any help you can give me on this petition.

Sincerely,

Lynn Spraggs,

UNITED STATES PATENT AND TRADEMARK OFFICE

COMMISSIONER FOR PATENTS
UNITED STATES PATENT AND TRADEMARK OFFICE
P.O. BOX 1450
ALEXANDRIA, VA 22313-1450
www.USPTO.GOV

Paper No. 17

Dr. Lynn Spraggs
Ultra Information Systems
8604 Kalavista Dr.
Vernon, BC V1B 1K3
CANADA

COPY MAILED

JUL 0 8 2003

OFFICE OF PETITIONS

ON PETITION

In re Application of
Spraggs
Application No. 09/554,419
Filed: May 11, 2000
Attorney Docket No. PA1065US
For: SYSTEM AND METHOD OF SENDING AND RECEIVING SECURE DATA WITH A SHARED KEY

This is a decision on the petition under 37 CFR 1.137(b), filed June 30, 2003 via facsimile, to revive the above-identified application.

The petition under 37 CFR 1.137(b) is **DISMISSED.**

Any further petition to revive the above-identified application must be submitted within TWO (2) MONTHS from the mail date of this decision. Extensions of time under 37 CFR 1.136(a) are permitted. The reconsideration request should include a cover letter entitled "Petition under 37 CFR 1.137(b)." This is **not** final agency action within the meaning of 5 U.S.C. § 704.

The above-identified application became abandoned for failure to properly reply to the final Office action, mailed July 3, 2002. Petitioner filed an amendment after final on October 21, 2002 (certificate of mailing date September 27, 2002). The amendment after final failed to place the above-identified application in *prima facie* condition for allowance, as was stated in the October 30, 2002 Advisory Action. This application became abandoned on October 4, 2002. On November 7, 2002, the Office granted a request by the attorneys of record to withdraw from representation. On January 21, 2003, a Notice of Abandonment was mailed. Applicant's petition to revive under 37 CFR 1.137(a), filed April 8, 2003, was dismissed on May 19, 2003 for failure to submit a proper reply and failure to show that the entire delay in responding to the July 3, 2002 final Office action was unavoidable.

A grantable petition under 37 CFR 1.137(b) must be accompanied by: (1) the required reply, unless previously filed; (2) the petition fee as set forth in 37 CFR 1.17(m); (3) a statement that the entire delay in filing the required reply from the due date for the reply until the filing of a grantable petition pursuant to 37 CFR 1.137(a) was unintentional; and (4) any terminal disclaimer (and fee as set forth in 37 CFR 1.20(d)) required pursuant to 37 CFR 1.137(c).This petition lacks items (1) and (2).

Regarding (1) above, petitioner still has not filed a proper reply. The amendment after final, filed October 21, 2002 (certificate of mailing date September 27, 2002), did not eliminate all of the Examiner's objections and rejections. It did not place the case in *prima facie* condition for allowance. In any reconsideration petition, petitioner must submit one of the following: (1) a Notice of Appeal, (2) a continuing application, or (3) an RCE and submission.

Application No. 09/554,419

Regarding (2) above, the small entity fee for filing a petition to revive an unintentionally abandoned application under 37 CFR 1.137(b) is set forth in 37 CFR 1.17(m) as $650. The payment of the petition fee is a prerequisite to the filing of a petition to revive under 37 CFR 1.137(b). This requirement cannot be waived. MPEP 711.03(c)(III)(B). A review of Office records indicates that petitioner only authorized the Office to charge $640 to her credit card.[1]

Petitioner is urged to submit $10.00 and an acceptable reply to the July 3, 2002 final Office action within two (2) months of the mail date of this decision.

Further correspondence with respect to this matter should be addressed as follows:

By mail: Mail Stop PETITION
Commissioner for Patents
P.O. Box 1450
Alexandria, VA 22313-1450

By facsimile: (703) 308-6916
Attn: Office of Petitions

By hand: Office of Petitions
2201 South Clark Place
Crystal Plaza 4, Suite 3C23
Arlington, VA 22202

Telephone inquiries pertaining to this matter may be directed to the undersigned at (703) 308-6712.

E. Shirene Willis

E. Shirene Willis
Senior Petitions Attorney
Office of Petitions

---

[1] Petitioner is informed that it is Office policy to destroy credit card authorization forms after fees are charged to the credit card, due to security concerns. Petitioner must submit another credit card authorization if petitioner desires the Office to charge the $10 owed to her credit card.

#18

PTO/SB/64 (05-03)
Approved for use through 04/30/2003. OMB 0651-0031
U.S. Patent and Trademark Office; U.S. DEPARTMENT OF COMMERCE
Under the Paperwork Reduction Act of 1995, no persons are required to respond to a collection of information unless it displays a valid OMB control number.

PETITION FOR REVIVAL OF AN APPLICATION FOR PATENT ABANDONED UNINTENTIONALLY UNDER 37 CFR 1.137(b)	Docket Number (Optional) PA1065 US

First named inventor: Lynn D. Spraggs

Application No.: 09/554,419 Art Unit: 2134

Filed: May 11 2000 Examiner: Mathew Smithers

Title: System and Method of Sending and Receiving Secure Data with a Shared Key

Attention: Office of Petitions
Mail Stop Petition
Commissioner for Patents
P.O. Box 1450
Alexandria, VA 22313-1450
FAX: (703) 308-6916

FAX RECEIVED
SEP 03 2003
PETITIONS OFFICE

NOTE: If information or assistance is needed in completing this form, please contact Petitions Information at (703) 305-9282.

The above-identified application became abandoned for failure to file a timely and proper reply to a notice or action by the United States Patent and Trademark Office. The date of abandonment is the day after the expiration date of the period set for reply in the Office notice or action plus an extensions of time actually obtained.

APPLICANT HEREBY PETITIONS FOR REVIVAL OF THIS APPLICATION

NOTE: A grantable petition requires the following items:
(1) Petition fee;
(2) Reply and/or issue fee;
(3) Terminal disclaimer with disclaimer fee –required for all utility and plant applications filed before June 8, 1995; and for all design applications; and
(4) Statement that the entire delay was unintentional.

1. Petition fee
☐ Small entity-fee $ 10 (37 CFR 1.17(m)). Applicant claims small entity status. See 37 CFR 1.27.

☐ Other than small entity - fee $ _____ (37 CFR 1.17(m))

2. Reply and/or fee
A. The reply and/or fee to the above-noted Office action in the form of _____ (identify type of reply):
☐ has been filed previously on _____.
☒ is enclosed herewith.
B. The issue fee of $_____.
☐ has been paid previously on _____.
☐ is enclosed herewith.

This collection of information is required by 37 CFR 1.137. The information is required to obtain or retain a benefit by the public which is to file (and by the USPTO to process) an application. Confidentiality is governed by 35 U.S.C. 122 and 37 CFR 1.14. This collection is estimated to take 1.0 hour to complete, including gathering, preparing, and submitting the completed application form to the USPTO. Time will vary depending upon the individual case. Any comments on the amount of time you require to complete this form and/or suggestions for reducing this burden, should be sent to the Chief Information Officer, U.S. Patent and Trademark Office, U.S. Department of Commerce, P.O. 1450, Alexandria, VA 22313-1450. DO NOT SEND FEES OR COMPLETED FORMS TO THIS ADDRESS. SEND TO: Mail Stop Petition, Commissioner for Patents, P.O. Box 1450, Alexandria, VA 22313-1450.

If you need assistance in completing the form, call 1-800-PTO-9199 and select option 2.

PTO/SB/61 (10-00)
Approved for use through 10/31/2002. OMB 0651-0031
U.S. Patent and Trademark Office; U.S. DEPARTMENT OF COMMERCE
Under the Paperwork Reduction Act of 1995, no persons are required to respond to a collection of information unless it displays a valid OMB control number.

PETITION FOR REVIVAL OF AN APPLICATION FOR PATENT ABANDONED UNAVOIDABLY UNDER 37 CFR 1.137(a)

3. Terminal disclaimer with disclaimer fee

☒ Since this utility/plant application was filed on or after June 8, 1995, no terminal disclaimer is required.

☐ A terminal disclaimer (and disclaimer fee (37 CFR 1.20(d)) of $_____for a small entity of $_____ for other than a small entity) disclaiming the required period of time is enclosed herewith (see PTO/SB/63).

4. An adequate showing of the cause of the delay, and that the entire delay in filing the required reply from the due date for the reply until the filing of a grantable petition under 37 CFR 1.137(a) was unavoidable, is enclosed.

WARNING: Information on this form may become public. Credit card information should not be included on this form. Provide credit card information and authorization on PTO-2038.

Sept 3/2003
Date

Signature

Telephone Number: (250) 542 0112

Lynn Spraggs
Typed or printed name

2179 11th Ave
Address

Vernon BC Canada
V1T 8V7

Enclosures: ☒ Fee Payment

☒ Reply

☐ Terminal Disclaimer Form

☐ Additional sheets containing statements establishing unavoidable delay

☐ _____

CERTIFICATE OF MAILING OR TRANSMISSION [37 CFR 1.8(a)]

I hereby certify that this correspondence is being:

☐ deposited with the United States Postal Service on the date shown below with sufficient postage as first class mail in an envelope addressed to: Assistant Commissioner for Patents, Box DAC, Washington, D.C. 20231.

☒ transmitted by facsimile on the date shown below to the United States Patent and Trademark Office at (703) 308-6916.

Sept. 3/03
Date

Signature

Lynn Spraggs
Typed or printed name of person signing certificate

Fax: 250-549-3751 Phone: 250-542-0112

UIS

FAX RECEIVED
SEP 0 3 2003
PETITIONS OFFICE

Fax

To:	Office of Petitions	**From:**	L.ynn Spraggs
Fax:	703-308-6916	**Pages:**	29 including this one
Phone:		**Date:**	3/09/2003
Re:	Petition 09/554,419	**CC:**	

☐ **Urgent** ☐ **For Review** ☐ **Please Comment** ☐ **Please Reply** ☐ **Please Recycle**

Attention: E. Shirene Willis

Attached please find the revised petition which I am submitting.

Please call me with any questions you might have.

Lynn Spraggs, Ph.D. P.Eng.

Phone: 250-542-0112
FAX : 250-549-3751

UNITED STATES PATENT AND TRADEMARK OFFICE

COMMISSIONER FOR PATENTS
UNITED STATES PATENT AND TRADEMARK OFFICE
P.O. BOX 1450
ALEXANDRIA, VA 22313-1450
WWW.USPTO.GOV

Paper No. 20

Dr. Lynn Spraggs
Ultra Information Systems
8604 Kalavista Dr.
Vernon, BC V1B 1K3
CANADA

COPY MAILED

SEP 2 6 2003

OFFICE OF PETITIONS

In re Application of
Spraggs
Application No. 09/554,419
Filed: May 11, 2000
Attorney Docket No. PA1065US
For: SYSTEM AND METHOD OF SENDING AND RECEIVING SECURE DATA WITH A SHARED KEY

ON PETITION

This is a decision on the reconsideration petition under 37 CFR 1.137(b), filed September 3, 2003 via facsimile, to revive the above-identified application.

The petition under 37 CFR 1.137(b) is **DISMISSED**.

Any further petition to revive the above-identified application must be submitted within TWO (2) MONTHS from the mail date of this decision. Extensions of time under 37 CFR 1.136(a) are permitted. The reconsideration request should include a cover letter entitled "Petition under 37 CFR 1.137(b)." This is **not** final agency action within the meaning of 5 U.S.C. § 704.

The above-identified application became abandoned for failure to properly reply to the final Office action, mailed July 3, 2002. Petitioner filed an amendment after final on October 21, 2002 (certificate of mailing date September 27, 2002). The amendment after final failed to place the above-identified application in *prima facie* condition for allowance, as was stated in the October 30, 2002 Advisory Action. This application became abandoned on October 4, 2002. On November 7, 2002, the Office granted a request by the attorneys of record to withdraw from representation. On January 21, 2003, a Notice of Abandonment was mailed. Applicant's petition to revive under 37 CFR 1.137(a), filed April 8, 2003, was dismissed on May 19, 2003 for failure to submit a proper reply and failure to show that the entire delay in responding to the July 3, 2002 final Office action was unavoidable. Applicant's petition under 37 CFR 1.137(b), filed June 30, 2003, was dismissed on July 8, 2003 for failure to submit a proper reply and failure to submit the full petition fee.

A grantable petition under 37 CFR 1.137(b) must be accompanied by: (1) the required reply, unless previously filed; (2) the petition fee as set forth in 37 CFR 1.17(m); (3) a statement that the entire delay in filing the required reply from the due date for the reply until the filing of a grantable petition pursuant to 37 CFR 1.137(a) was unintentional; and (4) any terminal disclaimer (and fee as set forth in 37 CFR 1.20(d)) required pursuant to 37 CFR 1.137(c).This petition lacks items (1) and (2).

Regarding (1) above, petitioner still has not filed a proper reply. The amendment after final, filed September 3, 2003, did not eliminate all of the Examiner's objections and rejections. It did not place the case in *prima facie* condition for allowance. **In any reconsideration petition, petitioner must submit one of the following: (1) a Notice of Appeal, (2) a continuing application, or (3) an RCE and submission.**

Regarding (2) above, petitioner's latest credit card authorization is not acceptable. In the Payment Amount field, petitioner wrote "$ 0." Thus, petitioner has not paid the $10 balance owed. Petitioner must submit another credit card authorization form authorizing the Office to charge $10 to her credit card.

Further correspondence with respect to this matter should be addressed as follows:

By mail:	Mail Stop PETITION Commissioner for Patents P.O. Box 1450 Alexandria, VA 22313-1450
By facsimile:	(703) 308-6916 Attn: Office of Petitions
By hand:	Office of Petitions 2201 South Clark Place Crystal Plaza 4, Suite 3C23 Arlington, VA 22202

Telephone inquiries pertaining to this matter may be directed to the undersigned at (703) 308-6712.

E. Shirene Willis

E. Shirene Willis
Senior Petitions Attorney
Office of Petitions

UNITED STATES PATENT AND TRADEMARK OFFICE

COMMISSIONER FOR PATENTS
UNITED STATES PATENT AND TRADEMARK OFFICE
P.O. BOX 1450
ALEXANDRIA, VA 22313-1450
www.uspto.gov

OIPE JC88
DEC 2 4 2003
PATENT & TRADEMARK OFFICE

Paper No. 20

Dr. Lynn Spraggs
Ultra Information Systems
8604 Kalavista Dr.
Vernon, BC V1B 1K3
CANADA

COPY MAILED
SEP 2 6 2003
OFFICE OF PETITIONS

In re Application of
Spraggs
Application No. 09/554,419
Filed: May 11, 2000
Attorney Docket No. PA1065US
For: SYSTEM AND METHOD OF SENDING AND RECEIVING SECURE DATA WITH A SHARED KEY

ON PETITION

This is a decision on the reconsideration petition under 37 CFR 1.137(b), filed September 3, 2003 via facsimile, to revive the above-identified application.

The petition under 37 CFR 1.137(b) is **DISMISSED.**

Any further petition to revive the above-identified application must be submitted within TWO (2) MONTHS from the mail date of this decision. Extensions of time under 37 CFR 1.136(a) are permitted. The reconsideration request should include a cover letter entitled "Petition under 37 CFR 1.137(b)." This is not final agency action within the meaning of 5 U.S.C. § 704.

The above-identified application became abandoned for failure to properly reply to the final Office action, mailed July 3, 2002. Petitioner filed an amendment after final on October 21, 2002 (certificate of mailing date September 27, 2002). The amendment after final failed to place the above-identified application in *prima facie* condition for allowance, as was stated in the October 30, 2002 Advisory Action. This application became abandoned on October 4, 2002. On November 7, 2002, the Office granted a request by the attorneys of record to withdraw from representation. On January 21, 2003, a Notice of Abandonment was mailed. Applicant's petition to revive under 37 CFR 1.137(a), filed April 8, 2003, was dismissed on May 19, 2003 for failure to submit a proper reply and failure to show that the entire delay in responding to the July 3, 2002 final Office action was unavoidable. Applicant's petition under 37 CFR 1.137(b), filed June 30, 2003, was dismissed on July 8, 2003 for failure to submit a proper reply and failure to submit the full petition fee.

A grantable petition under 37 CFR 1.137(b) must be accompanied by: (1) the required reply, unless previously filed; (2) the petition fee as set forth in 37 CFR 1.17(m); (3) a statement that the entire delay in filing the required reply from the due date for the reply until the filing of a grantable petition pursuant to 37 CFR 1.137(a) was unintentional; and (4) any terminal disclaimer (and fee as set forth in 37 CFR 1.20(d)) required pursuant to 37 CFR 1.137(c). This petition lacks items (1) and (2).

Regarding (1) above, petitioner still has not filed a proper reply. The amendment after final, filed September 3, 2003, did not eliminate all of the Examiner's objections and rejections. It did not place the case in *prima facie* condition for allowance. **In any reconsideration petition, petitioner must submit one of the following: (1) a Notice of Appeal, (2) a continuing application, or (3) an RCE and submission.**

Regarding (2) above, petitioner's latest credit card authorization is not acceptable. In the Payment Amount field, petitioner wrote "$ 0." Thus, petitioner has not paid the $10 balance owed. Petitioner must submit another credit card authorization form authorizing the Office to charge $10 to her credit card.

RECEIVED
DEC 3 0 2003
OFFICE OF PETITIONS

Further correspondence with respect to this matter should be addressed as follows:

By mail: Mail Stop PETITION
Commissioner for Patents
P.O. Box 1450
Alexandria, VA 22313-1450

By facsimile: (703) 308-6916
Attn: Office of Petitions

By hand: Office of Petitions
2201 South Clark Place
Crystal Plaza 4, Suite 3C23
Arlington, VA 22202

Telephone inquiries pertaining to this matter may be directed to the undersigned at (703) 308-6712.

E. Shirene Willis

E. Shirene Willis
Senior Petitions Attorney
Office of Petitions

September 3, 2003

Attention: E. Shirene Willis
Senior Petitions Attorney

RECEIVED
DEC 3 0 2003
OFFICE OF PETITIONS

Application Number: 09/554,429
Application Filed: May 11, 2000
For: SYSTEM AND METHOD OF SENDING AND RECEIVING SECURE DATA WITH A SHARED KEY

Application for revival due to unintentional delay

Please accept this letter as my request to have the above patent application reinstated. I have tried very hard to comply exactly with what has been asked of me and I hope, no, I pray, that I have done it right this time. This patent is very important to me and I have tried my best to meet the strict requirements that you adhere to.

If there are any problems, please contact me at your convenience so I can get this application back on track.

Thanking you in advance for any help you can give me on this petition.

Sincerely,

Lynn Spraggs,

UNITED STATES PATENT AND TRADEMARK OFFICE

COMMISSIONER FOR PATENTS
UNITED STATES PATENT AND TRADEMARK OFFICE
P.O. BOX 1450
ALEXANDRIA, VA 22313-1450
WWW.USPTO.GOV

Paper No. 17

Dr. Lynn Spraggs
Ultra Information Systems
8604 Kalavista Dr.
Vernon, BC V1B 1K3
CANADA

COPY MAILED

JUL 0 8 2003

OFFICE OF PETITIONS

RECEIVED

DEC 3 0 2003

OFFICE OF PETITIONS

In re Application of
Spraggs
Application No. 09/554,419
Filed: May 11, 2000
Attorney Docket No. PA1065US
For: SYSTEM AND METHOD OF SENDING AND RECEIVING SECURE DATA WITH A SHARED KEY

ON PETITION

This is a decision on the petition under 37 CFR 1.137(b), filed June 30, 2003 via facsimile, to revive the above-identified application.

The petition under 37 CFR 1.137(b) is **DISMISSED.**

Any further petition to revive the above-identified application must be submitted within TWO (2) MONTHS from the mail date of this decision. Extensions of time under 37 CFR 1.136(a) are permitted. The reconsideration request should include a cover letter entitled "Petition under 37 CFR 1.137(b)." This is **not** final agency action within the meaning of 5 U.S.C. § 704.

The above-identified application became abandoned for failure to properly reply to the final Office action, mailed July 3, 2002. Petitioner filed an amendment after final on October 21, 2002 (certificate of mailing date September 27, 2002). The amendment after final failed to place the above-identified application in *prima facie* condition for allowance, as was stated in the October 30, 2002 Advisory Action. This application became abandoned on October 4, 2002. On November 7, 2002, the Office granted a request by the attorneys of record to withdraw from representation. On January 21, 2003, a Notice of Abandonment was mailed. Applicant's petition to revive under 37 CFR 1.137(a), filed April 8, 2003, was dismissed on May 19, 2003 for failure to submit a proper reply and failure to show that the entire delay in responding to the July 3, 2002 final Office action was unavoidable.

A grantable petition under 37 CFR 1.137(b) must be accompanied by: (1) the required reply, unless previously filed; (2) the petition fee as set forth in 37 CFR 1.17(m); (3) a statement that the entire delay in filing the required reply from the due date for the reply until the filing of a grantable petition pursuant to 37 CFR 1.137(a) was unintentional; and (4) any terminal disclaimer (and fee as set forth in 37 CFR 1.20(d)) required pursuant to 37 CFR 1.137(c).This petition lacks items (1) and (2).

Regarding (1) above, petitioner still has not filed a proper reply. The amendment after final, filed October 21, 2002 (certificate of mailing date September 27, 2002), did not eliminate all of the Examiner's objections and rejections. It did not place the case in *prima facie* condition for allowance. In any reconsideration petition, petitioner must submit one of the following: (1) a Notice of Appeal, (2) a continuing application, or (3) an RCE and submission.

Application No. 09/554,419

Regarding (2) above, the small entity fee for filing a petition to revive an unintentionally abandoned application under 37 CFR 1.137(b) is set forth in 37 CFR 1.17(m) as $650. The payment of the petition fee is a prerequisite to the filing of a petition to revive under 37 CFR 1.137(b). This requirement cannot be waived. MPEP 711.03(c)(III)(B). A review of Office records indicates that petitioner only authorized the Office to charge $640 to her credit card.[1]

Petitioner is urged to submit $10.00 and an acceptable reply to the July 3, 2002 final Office action within two (2) months of the mail date of this decision.

RECEIVED
DEC 3 0 2003
OFFICE OF PETITIONS

Further correspondence with respect to this matter should be addressed as follows:

By mail: Mail Stop PETITION
Commissioner for Patents
P.O. Box 1450
Alexandria, VA 22313-1450

By facsimile: (703) 308-6916
Attn: Office of Petitions

By hand: Office of Petitions
2201 South Clark Place
Crystal Plaza 4, Suite 3C23
Arlington, VA 22202

Telephone inquiries pertaining to this matter may be directed to the undersigned at (703) 308-6712.

E. Shirene Willis

E. Shirene Willis
Senior Petitions Attorney
Office of Petitions

[1] Petitioner is informed that it is Office policy to destroy credit card authorization forms after fees are charged to the credit card, due to security concerns. Petitioner must submit another credit card authorization if petitioner desires the Office to charge the $10 owed to her credit card.

UNITED STATES PATENT AND TRADEMARK OFFICE

COMMISSIONER FOR PATENTS
UNITED STATES PATENT AND TRADEMARK OFFICE
P.O. BOX 1450
ALEXANDRIA, VA 22313-1450
www.uspto.gov

Paper No. 24

Dr. Lynn Spraggs
Ultra Information Systems
8604 Kalavista Dr.
Vernon, BC V1B 1K3
CANADA

COPY MAILED

APR 30 2004

OFFICE OF PETITIONS

In re Application of
Spraggs
Application No. 09/554,419
Filed: May 11, 2000
Attorney Docket No. PA1065US
For: SYSTEM AND METHOD OF SENDING AND RECEIVING SECURE DATA WITH A SHARED KEY

ON PETITION

This is a decision on the reconsideration petition under 37 CFR 1.137(b), filed December 24, 2003 and supplemented on March 5, 2004, to revive the above-identified application.

The above-identified application became abandoned for failure to properly reply to the final Office action, mailed July 3, 2002. Petitioner filed an amendment after final on October 21, 2002 (certificate of mailing date September 27, 2002). The amendment after final failed to place the above-identified application in *prima facie* condition for allowance, as was stated in the October 30, 2002 Advisory Action. This application became abandoned on October 4, 2002. On November 7, 2002, the Office granted a request by the attorneys of record to withdraw from representation. On January 21, 2003, a Notice of Abandonment was mailed. Applicant's petition to revive under 37 CFR 1.137(a), filed April 8, 2003, was dismissed on May 19, 2003 for failure to submit a proper reply and failure to show that the entire delay in responding to the July 3, 2002 final Office action was unavoidable. Applicant's petition under 37 CFR 1.137(b), filed June 30, 2003, was dismissed on July 8, 2003 for failure to submit a proper reply and failure to submit the full petition fee.

Petitioner has submitted an amendment after final that places the application in *prima facie* condition for allowance, the petition fee, and an acceptable statement of the unintentional nature of the delay in responding to the July 3, 2002 final Office action.

The petition under 37 CFR 1.137(b) is **GRANTED**.

Regarding finances, it appears that petitioner's credit card has been charged $640.00 and $650.00 towards the $665.00 petition fee. Accordingly, petitioner's credit card will be credited $625.00.

After this decision is mailed, the application will be returned to Technology Center 2100.

Telephone inquiries pertaining to this matter may be directed to the undersigned at (703) 308-6712.

E. Shirene Willis

E. Shirene Willis
Senior Petitions Attorney
Office of Petitions

SEP 1 0 2001

UNITED STATES PATENT AND TRADEMARK OFFICE

Commissioner for Patents
United States Patent and Trademark Office
Washington, D.C. 20231
www.uspto.gov

Donald R.Piper, Jr.
DANN, DORFMAN, HERRELL & SKILLMAN, P.C.
1601 Market Street, Suite 720
Philadelphia, PA 19103-2307

In re Application of	:	
CRUICKSHANK *et al*	:	
Application No.: 09/554, 426	:	DECISION ON PETITION
PCT No.: PCT/GB98/03401	:	
Int. Filing Date: 12 November 1998	:	TO WITHDRAW HOLDING
Priority Date: 14 November 1997	:	
Attorney's Docket No.: CRUICKSHANK ET AL	:	OF ABANDONMENT
For: COMMUNICATIONS TERMINAL AND	:	
OPERATING METHOD	:	

The decision is in response to applicants' "Resubmission of Response to Notification of Missing Requirements and Request for Reinstatement of Application" filed on 04 June 2001. This is treated as a petition to withdraw the holding of abandonment. No fee is required.

BACKGROUND

On 22 June 2000, the United States Designated/Elected Office (DO/EO/US) mailed a Notification of Missing Requirements Under 35 U.S.C. 371 (Form PCT/DO/EO/905) indicating that a declaration in compliance with 37 CFR 1.497(a) & (b) must be provided. A one-month time period for response was set.

On 24 July 2000, applicants purportedly filed documents in the above-captioned application which included an executed declaration.

On 29 May 2001, the DO/EO/US mailed a Notification of Abandonment (Form PCT/DO/EO/909) stating that the above-captioned application was abandoned because applicants failed to respond to the Form PCT/DO/EO/905 within the time period set.

On 04 June 2001, applicants filed the instant petition via facsimile which was accompanied by, *inter alia*, copies of the documents purportedly filed 24 July 2000, a stamped postcard receipt for the 24 July 2000 documents, along with a copy of Express Mail label No. EL1824470981US.

DISCUSSION

MPEP § 503 lists procedures to ensure receipt of any paper filed in the PTO. Applicants must enclose a self-addressed postcard identifying all of the papers filed.

The PTO will stamp the receipt date on the card and place it on the outgoing mail. The identifying data on the card must clearly identify the paper for which receipt is requested. A postcard receipt which itemizes and properly identifies the papers which are being filed serves as *prima facie* evidence of receipt in the PTO of all the items listed thereon on the date stamped thereon by the PTO.

In this case, applicants have provided a copy of the date-stamped filing receipt for documents submitted 24 July 2000. The filing receipt records that a "Combined Declaration and Power of Attorney" were received in the PTO. The filing receipt is stamped "OIPE JUL 24 2000" across its face. The name of the applicant, international application number, and title are all listed on the postcard receipt. In addition, applicants included a copy of Express Mail label No. EL1824470981US which has a "Date In" of "7 24 00" and is stamped as received by the USPS on "JUL 24 2000." The Express Mail No. is listed on the transmittal letter for the 24 July 2000 documents.

Accordingly, applicants have provided *prima facie* evidence that the declaration and other documents listed above were received by the PTO on 24 July 2000.

DECISION

For the reasons above, applicant's petition to withdraw the holding of abandonment is **GRANTED**.

The Form PCT/DO/EO/909 mailed 29 May 2001 is hereby **VACATED**.

Applicants have completed the requirements for acceptance under 35 U.S.C. 371(c). The application has an international filing date of 12 November 1998, under 35 U.S.C. 363, and a 35 U.S.C. 371(c) date of **24 July 2000.**

This application is being forwarded to the National Stage Processing Division of the Office of PCT Operations for continued processing.

James Thomson

James Thomson
Attorney Advisor
PCT Legal Office

Tel.: (703) 308-6457

UNITED STATES PATENT AND TRADEMARK OFFICE

Commissioner for Patents
United States Patent and Trademark Office
P.O. Box 1450
Alexandria, VA 22313-1450
www.uspto.gov

Dr.-Ing. Giok Djien Go
Pfahlgrabenstr. 45
Idstein D-655-10 DE GERMANY

COPY MAILED

DEC 19 2008

OFFICE OF PETITIONS

In re Application of :
Giok Djien Go :
Application No. 09/554,464 : ON PETITION
Filed: November 10, 1998 :
Attorney Docket No.

This is a decision on the petition under 37 CFR 1.181 to withdraw the holding of abandonment, filed on September 15, 2008.

The petition is **DISMISSED**.

The record reflects that a Notice of Allowability was mailed December 27, 2007, allowing a statutory period for reply of three months from its mailing date. The Notice required corrected drawings to be filed. A response was not noted prior to the expiration of the period for reply and the application became abandoned on March 28, 2008. A Notice of Abandonment was mailed April 23, 2008.

Petitioner maintains that a timely and proper response was mailed on May 5, 2008.

Section 711.03 of the *Manual of Patent Examining Procedure* provides guidance where, as in this case, petitioner is arguing that a timely response to the Office action was mailed and provides, in pertinent part, that:

> 37 CFR 1.10(c) through 1.10(e) >and 1.10(g)< set forth procedures for petitioning the Director of the USPTO to accord a filing date to correspondence as of the date of deposit of the correspondence as "Express Mail." A petition to withdraw the holding of abandonment relying upon a timely reply placed in "Express Mail" must include an appropriate petition under 37 CFR 1.10(c), (d), * (e)>, or (g)< (see MPEP § 513). When a paper is shown to have been mailed to the Office using the "Express Mail" procedures, the paper must be entered in PALM with the "Express Mail" date.
>
> Similarly, applicants may establish that a reply was filed with a postcard receipt that properly identifies the reply and provides *prima facie* evidence that the reply was timely filed. See MPEP § 503. For example, if the application has been held abandoned for failure to file a reply to a first Office action, and applicant has a postcard receipt showing that an amendment was timely filed in response to the Office action, then the holding of abandonment should be withdrawn upon the filing of a petition to withdraw the holding of

abandonment. When the reply is shown to have been timely filed based on a postcard receipt, the reply must be entered into PALM using the date of receipt of the reply as shown on the post card receipt.

Where a certificate of mailing under 37 CFR 1.8, but not a postcard receipt, is relied upon in a petition to withdraw the holding of abandonment, see 37 CFR 1.8(b) and MPEP § 512. As stated in 37 CFR 1.8(b)(3) the statement that attests to the previous timely mailing or transmission of the correspondence must be on a personal knowledge basis, or to the satisfaction of the Director of the USPTO. If the statement attesting to the previous timely mailing is not made by the person who signed the Certificate of Mailing (i.e., there is no personal knowledge basis), then the statement attesting to the previous timely mailing should include evidence that supports the conclusion that the correspondence was actually mailed (e.g., copies of a mailing log establishing that correspondence was mailed for that application). When the correspondence is shown to have been timely filed based on a certificate of mailing, the correspondence is entered into PALM with the actual date of receipt (i.e., the date that the duplicate copy of the papers was filed with the statement under 37 CFR 1.8).

37 CFR 1.8(b) also permits applicant to notify the Office of a previous mailing or transmission of correspondence and submit a statement under 37 CFR 1.8(b)(3) accompanied by a duplicate copy of the correspondence when a reasonable amount of time (e.g., more than one month) has elapsed from the time of mailing or transmitting of the correspondence. Applicant does not have to wait until the application becomes abandoned before notifying the Office of the previous mailing or transmission of the correspondence. Applicant should check the private Patent Application Information Retrieval (PAIR) system for the status of the correspondence before notifying the Office. See MPEP § 512.

The above-cited section of the MPEP explains that in order for correspondence to receive a filing date as of the date of deposit with the United States Postal Service (USPS), the correspondence must either be mailed via USPS Express Mail, or the correspondence must contain a proper certificate of mailing pursuant to 37 CFR 1.8. Correspondence may also receive the date of the receipt with the USPTO if petitioner provides an itemized Office date-stamped postcard whereby the USPTO acknowledges receipt of the item mailed. There is no evidence that petitioner used the procedures provided in 37 CFR 1.8 and 1.10, which, if properly utilized, would allow a filing to be accorded a filing date as of the date mailed or deposited, respectively, rather than the date the filing was received by the Office. The certificate of mailing procedures under 37 CFR 1.8 allow for a filing date to be accorded as of the date the filing was mailed rather than the date the filing was received by the Office provided the procedures set out in 37 CFR 1.8 are followed and the filing is not excepted under 37 CFR 1.8(2)(i). The procedures under 37 CFR 1.10 allow correspondence deposited with the United States Postal Service Express Mail Service pursuant to 37 CFR 1.10 to be accorded a filing date as of the date-in shown on the Express Mail label rather than the date the filing was received by the Office. Filings made by any other mail service, i.e., first class postage, USPS certified mail, FEDEX, Priority Mail, will not receive the benefit of 37 CFR 1.10.

The holding of abandonment will not be withdrawn because petitioner has not provided *prima facie* evidence that the response was deposited with the USPS Express Mail Service within the period for reply, and has not provided a certificate of mailing pursuant to 37 CFR 1.8, or an USPTO date-stamped postcard showing that the response received and lost by the USPTO. It is noted that petitioner resides in Germany and that petitioner would not be able to mail the response pursuant to 37 CFR 1.10 or making the required certificate of mailing under 37 CFR 1.8. Petitioner could have enclosed a postcard with the response to the Notice, as per MPEP 503, which would have been stamped by the USPTO and returned to petitioner thereby acknowledging receipt of the response. The petition cannot be granted based on the evidence submitted because there is nothing that demonstrate that a response to the Notice of Allowability was timely mailed to the USPTO and lost thereafter. The petition is dismissed accordingly.

It is further noted that petitioner indicates that the corrected drawings were sent by registered mail on May 5, 2008. Petitioner is advised that a response to the Notice of Allowability was due no later than March 27, 2008, therefore, the corrected drawings that were allegedly mailed May 5, 2008, would not have been timely in any case.

Alternatively, petitioner may revive the application based on unintentional abandonment under 37 CFR 1.137(b). A grantable petition pursuant to 37 CFR 1.137(b) must be accompanied by the required reply, the required petition fee ($1620.00 for a large entity and $810.00 for a verified small entity), and a statement that the **entire** delay in filing the required reply from the due date for the reply until the filing of a grantable petition pursuant to 37 CFR 1.137(b) was unintentional.

Further correspondence with respect to this matter should be addressed as follows:

United States Patent and Trademark Office
Box 1450
Alexandria, VA 22313-1450

By facsimile: (571) 273-8300
Attn: Office of Petitions

Telephone inquiries concerning this decision should be directed to the undersigned (571) 272-3222.

Kenya A. McLaughlin
Petitions Attorney
Office of Petitions

Enclosure: Form PTO/SB/64

PTO/SB/64 (11-08)
Approved for use through 12/31/2008. OMB 0651-0031
U.S. Patent and Trademark Office; U.S. DEPARTMENT OF COMMERCE
Under the Paperwork Reduction Act of 1995, no persons are required to respond to a collection of information unless it displays a valid OMB control number.

PETITION FOR REVIVAL OF AN APPLICATION FOR PATENT ABANDONED UNINTENTIONALLY UNDER 37 CFR 1.137(b)

Docket Number (Optional)

First named inventor:

Application No.: Art Unit:

Filed: Examiner:

Title:

Attention: Office of Petitions
Mail Stop Petition
Commissioner for Patents
P.O. Box 1450
Alexandria, VA 22313-1450
FAX (571) 273-8300

NOTE: If information or assistance is needed in completing this form, please contact Petitions Information at (571) 272-3282.

The above-identified application became abandoned for failure to file a timely and proper reply to a notice or action by the United States Patent and Trademark Office. The date of abandonment is the day after the expiration date of the period set for reply in the office notice or action plus an extensions of time actually obtained.

APPLICANT HEREBY PETITIONS FOR REVIVAL OF THIS APPLICATION

NOTE: A grantable petition requires the following items:
(1) Petition fee;
(2) Reply and/or issue fee;
(3) Terminal disclaimer with disclaimer fee - required for all utility and plant applications filed before June 8, 1995; and for all design applications; and
(4) Statement that the entire delay was unintentional.

1. Petition fee

☐ Small entity-fee $ _____ (37 CFR 1.17(m)). Applicant claims small entity status. See 37 CFR 1.27.

☐ Other than small entity – fee $ _____ (37 CFR 1.17(m))

2. Reply and/or fee

A. The reply and/or fee to the above-noted Office action in the form of _____(identify type of reply):

☐ has been filed previously on _____.
☐ is enclosed herewith.

B. The issue fee and publication fee (if applicable) of $ _____.

☐ has been paid previously on _____.
☐ is enclosed herewith.

This collection of information is required by 37 CFR 1.137(b). The information is required to obtain or retain a benefit by the public which is to file (and by the USPTO to process) an application. Confidentiality is governed by 35 U.S.C. 122 and 37 CFR 1.11 and 1.14. This collection is estimated to take 1.0 hour to complete, including gathering, preparing, and submitting the completed application form to the USPTO. Time will vary depending upon the individual case. Any comments on the amount of time you require to complete this form and/or suggestions for reducing this burden, should be sent to the Chief Information Officer, U.S. Patent and Trademark Office, U.S. Department of Commerce, P.O. Box 1450, Alexandria, VA 22313-1450. DO NOT SEND FEES OR COMPLETED FORMS TO THIS ADDRESS. **SEND TO: Mail Stop Petition, Commissioner for Patents, P.O. Box 1450, Alexandria, VA 22313-1450.**

If you need assistance in completing the form, call 1-800-PTO-9199 and select option 2.

Under the Paperwork Reduction Act of 1995, no persons are required to respond to a collection of information unless it displays a valid OMB control number.

3. Terminal disclaimer with disclaimer fee

☐ Since this utility/plant application was filed on or after June 8, 1995, no terminal disclaimer is required.

☐ A terminal disclaimer (and disclaimer fee (37 CFR 1.20(d)) of $ _____ for a small entity or $ _____ for other than a small entity) disclaiming the required period of time is enclosed herewith (see PTO/SB/63).

4. STATEMENT: The entire delay in filing the required reply from the due date for the required reply until the filing of a grantable petition under 37 CFR 1.137(b) was unintentional. [NOTE: The United States Patent and Trademark Office may require additional information if there is a question as to whether either the abandonment or the delay in filing a petition under 37 CFR 1.137(b) was unintentional (MPEP 711.03(c), subsections (III)(C) and (D)).]

WARNING:

Petitioner/applicant is cautioned to avoid submitting personal information in documents filed in a patent application that may contribute to identity theft. Personal information such as social security numbers, bank account numbers, or credit card numbers (other than a check or credit card authorization form PTO-2038 submitted for payment purposes) is never required by the USPTO to support a petition or an application. If this type of personal information is included in documents submitted to the USPTO, petitioners/applicants should consider redacting such personal information from the documents before submitting them to the USPTO. Petitioner/applicant is advised that the record of a patent application is available to the public after publication of the application (unless a non-publication request in compliance with 37 CFR 1.213(a) is made in the application) or issuance of a patent. Furthermore, the record from an abandoned application may also be available to the public if the application is referenced in a published application or an issued patent (see 37 CFR 1.14). Checks and credit card authorization forms PTO-2038 submitted for payment purposes are not retained in the application file and therefore are not publicly available.

Signature	Date
Typed or printed name	Registration Number, if applicable
Address	Telephone Number
Address	

Enclosures:
☐ Fee Payment
☐ Reply
☐ Terminal Disclaimer Form
☐ Additional sheets containing statements establishing unintentional delay
☐ Other: _____

CERTIFICATE OF MAILING OR TRANSMISSION [37 CFR 1.8(a)]

I hereby certify that this correspondence is being:

☐ Deposited with the United States Postal Service on the date shown below with sufficient postage as first class mail in an envelope addressed to: Mail Stop Petition, Commissioner for Patents, P. O. Box 1450, Alexandria, VA 22313-1450.

☐ Transmitted by facsimile on the date shown below to the United States Patent and Trademark Office at (571) 273-8300.

Date	Signature
	Typed or printed name of person signing certificate

Privacy Act Statement

The **Privacy Act of 1974 (P.L. 93-579)** requires that you be given certain information in connection with your submission of the attached form related to a patent application or patent. Accordingly, pursuant to the requirements of the Act, please be advised that: (1) the general authority for the collection of this information is 35 U.S.C. 2(b)(2); (2) furnishing of the information solicited is voluntary; and (3) the principal purpose for which the information is used by the U.S. Patent and Trademark Office is to process and/or examine your submission related to a patent application or patent. If you do not furnish the requested information, the U.S. Patent and Trademark Office may not be able to process and/or examine your submission, which may result in termination of proceedings or abandonment of the application or expiration of the patent.

The information provided by you in this form will be subject to the following routine uses:

1. The information on this form will be treated confidentially to the extent allowed under the Freedom of Information Act (5 U.S.C. 552) and the Privacy Act (5 U.S.C 552a). Records from this system of records may be disclosed to the Department of Justice to determine whether disclosure of these records is required by the Freedom of Information Act.
2. A record from this system of records may be disclosed, as a routine use, in the course of presenting evidence to a court, magistrate, or administrative tribunal, including disclosures to opposing counsel in the course of settlement negotiations.
3. A record in this system of records may be disclosed, as a routine use, to a Member of Congress submitting a request involving an individual, to whom the record pertains, when the individual has requested assistance from the Member with respect to the subject matter of the record.
4. A record in this system of records may be disclosed, as a routine use, to a contractor of the Agency having need for the information in order to perform a contract. Recipients of information shall be required to comply with the requirements of the Privacy Act of 1974, as amended, pursuant to 5 U.S.C. 552a(m).
5. A record related to an International Application filed under the Patent Cooperation Treaty in this system of records may be disclosed, as a routine use, to the International Bureau of the World Intellectual Property Organization, pursuant to the Patent Cooperation Treaty.
6. A record in this system of records may be disclosed, as a routine use, to another federal agency for purposes of National Security review (35 U.S.C. 181) and for review pursuant to the Atomic Energy Act (42 U.S.C. 218(c)).
7. A record from this system of records may be disclosed, as a routine use, to the Administrator, General Services, or his/her designee, during an inspection of records conducted by GSA as part of that agency's responsibility to recommend improvements in records management practices and programs, under authority of 44 U.S.C. 2904 and 2906. Such disclosure shall be made in accordance with the GSA regulations governing inspection of records for this purpose, and any other relevant (*i.e.*, GSA or Commerce) directive. Such disclosure shall not be used to make determinations about individuals.
8. A record from this system of records may be disclosed, as a routine use, to the public after either publication of the application pursuant to 35 U.S.C. 122(b) or issuance of a patent pursuant to 35 U.S.C. 151. Further, a record may be disclosed, subject to the limitations of 37 CFR 1.14, as a routine use, to the public if the record was filed in an application which became abandoned or in which the proceedings were terminated and which application is referenced by either a published application, an application open to public inspection or an issued patent.
9. A record from this system of records may be disclosed, as a routine use, to a Federal, State, or local law enforcement agency, if the USPTO becomes aware of a violation or potential violation of law or regulation.

UNITED STATES PATENT AND TRADEMARK OFFICE

Commissioner for Patents
United States Patent and Trademark Office
P.O. Box 1450
Alexandria, VA 22313-1450
www.uspto.gov

Dr.-Ing. Giok Djien Go
Pfahlgrabenstr. 45
Idstein D-655-10 DE GERMANY

COPY MAILED

FEB 13 2009

OFFICE OF PETITIONS

In re Application of :
Giok Djien Go :
Application No. 09/554,464 : ON PETITION
Filed: November 10, 1998 :
Attorney Docket No

This is a decision on the petition under 37 CFR §1.137(b), January 13, 2009, to revive the above-identified application.

The petition is **granted**.

The record reflects that a Notice of Allowability was mailed December 27, 2007, allowing a statutory period for reply of three months from its mailing date. The Notice required corrected drawings to be filed. A response was not noted prior to the expiration of the period for reply and the application became abandoned on March 28, 2008. A Notice of Abandonment was mailed April 23, 2008.

The corrected drawings filed September 15, 2008, are noted.

The application is being directed to the Office of Data Management for further processing.

Telephone inquiries concerning this decision may be directed to the undersigned at (571) 272-3222.

Kenya A. McLaughlin
Petitions Attorney
Office of Petitions

UNITED STATES PATENT AND TRADEMARK OFFICE

Commissioner for Patents
United States Patent and Trademark Office
P.O. Box 1450
Alexandria, VA 22313-1450
www.uspto.gov

LEE & HAYES PLLC
421 W RIVERSIDE AVENUE
SUITE 500
SPOKANE, WA 99201

COPY MAILED

OCT 1 1 2005

OFFICE OF PETITIONS

In re Application of	:	
Sierra et al.	:	
Application No. 09/554,507	:	ON PETITION
Filed: April 6, 2000	:	
Attorney Docket No. MS1-486US	:	

Request for Information:

Petitioner should submit the requested information within TWO MONTHS of the mailing date of this letter. Extensions of time may not be obtained. No additional fee is due for a response to the instant request for information. The response to this Requirement for Information should include a cover letter entitled "Response to Request for Information and Renewed Petition under 37 CFR 1.137(a)." The failure to file a reply to the instant Request for Information will be interpreted as a desire to no longer pursue revival of the application and the Office will give no further consideration to the matter.

Facts:

A final Office action was mailed on November 3, 2004.

A review of the final Office action indicates it was mailed to the correct address. The final Office action correctly lists the attorney docket number (MS1-486US) for the application.

During a review of PAIR, petitioner discovered the existence of the final Office action.

Petitioner has filed a response to the final Office action along with a petition under 37 CFR 1.137(a).

Petitioner states the final Office action was never received. Petitioner has submitted a copy of a docket report to support his statement.

Discussion:

A petition under 37 CFR 1.181 (no fee) may be granted when a petitioner proves non-receipt of an Office action.

If a petition under 37 CFR 1.137(a) is filed proving non-receipt of an Office action, the Office may choose to treat the petition as one filed under 37 CFR 1.181 in addition to 37 CFR 1.137(a). If a petition under 37 CFR 1.181 is granted, the petition under 37 CFR 1.137(a) is dismissed as moot and the petition fee ($500 for a large entity) is refunded.

In this case, the Office action mailed November 3, 2004, would be vacated.

Unfortunately, the current showing of record is insufficient to establish non-receipt of the final Office action.

In the absence of any irregularity in the mailing of the Office action, there is a strong presumption that the Office action was properly mailed. In order to overcome this presumption, a petition alleging non-receipt of an Office action must:
(1) include a statement from practitioner stating that the Office action was not received,
(2) attest that a search of the file jacket has been made,
(3) attest that a search of all relevant docket records has been made,
(4) include a copy of the docket record where the Office action would have been entered had it been received, and
(5) include any additional information which may be required by the Commissioner.
See MPEP 711.03(c)(II).

As to (2) above, petitioner has failed to state a search of the file jacket has been made.

The Office requests petitioner file a request for reconsideration along with a statement that a search of the file jacket has been made and the Office action has not been located. Although one might assume a search of the file jacket would have been performed prior to a party asserting non-receipt of a paper, that is not always the case. Therefore, the Office requests an explicit statement.

The petition under 37 CFR 1.137(a):

If the Office dismissed the petition under 37 CFR 1.137(a), the Office would retain the $500 fee even if the petition was later dismissed as moot. As a courtesy, the Office is holding a decision on the petition in abeyance until receipt of the request for reconsideration. Therefore, the Office will be able to refund the fee if the holding of abandonment is withdrawn.

Further correspondence with respect to this matter should be addressed as follows:

By mail: Mail Stop Petition
Commissioner for Patents
P.O. Box 1450
Alexandria, VA 22313-1450

By facsimile: (571) 273-8300
Attn: Office of Petitions

If a request for reconsideration is filed, and a decision on the new petition is not received within three months, petitioner may wish to call the number below to check on the status of the renewed petition.

Telephone inquiries should be directed to Petitions Attorney Steven Brantley at (571) 272-3203.

Charles Steven Brantley
Petitions Attorney
Office of Petitions

19 AUG 2002

UNITED STATES PATENT AND TRADEMARK OFFICE

COMMISSIONER FOR PATENTS
UNITED STATES PATENT AND TRADEMARK OFFICE
WASHINGTON, D.C. 20231
www.uspto.gov

BROBECK, PHLEGER & HARRISON, LLP
12390 EL CAMINO REAL
SAN DIEGO, CA 92130

In re Application of	:
BEELEY et al.	:
Serial No.: 09/554,533	:
PCT No.: PCT/US98/24210	: DECISION ON PETITION
Int. Filing Date: 13 November 1998	:
Priority Date: 14 November 1997	: UNDER 37 CFR 1.137(b)
Attorney's Docket No.: 030639.0043.UTL2	:
For: NOVEL EXENDIN AGONIST COMPOUNDS	:

This is a decision on applicants' "Petition for Revival of an Abandoned Application Under 37 CFR 1.137(b)" in the above referenced application. The petition was filed on 11 July 2002 in the United States Patent and Trademark Office (USPTO). A petition fee of $640 is required and charged to applicant's deposit account. This is also in response to applicant's "Communication" filed on 15 July 2002 and "Right of Assignee to Take Action Under 37 CFR§3.73" filed on 01 August 2002 along with a copy of the executed assignment..

BACKGROUND

On 14 June 2000, a Notification of Missing Requirements (Form PCT/DO/EO/905) was mailed to applicants indicating that the oath or declaration, in compliance with 37 CFR 1.497(a) and (b), and surcharge for filing the oath or declaration after the thirty month period was required.

On 18 September 2001, after the period within which to respond to the Form 905 expired, a Notification of Abandonment (Form PCT/DO/EO/909) was mailed to applicants indicating that applicants had failed to respond to the Notification of Missing Requirements and that the application was considered abandoned.

On 11 July 2002, applicants responded to the Notification of Abandonment with the instant petition to revive the abandoned application and with a declaration executed by the inventors. The declaration, which accompanied the response, referenced international application no. PCT/US98/24210.

DISCUSSION

The petition to revive under 37 CFR 1.137(b) filed 11 July 2002 in the above-captioned application is hereby granted as follows:

Applicants' statement that international application that "entire delay in filing the required reply from the due date for the reply until the filing of this grantable petition under 37 CFR 1.137(b) was unintentional" meets the requirements of 37 CFR 1.137(b)(3).

A review of the application file reveals that the basic national fee of $335 has been paid. The required petition fee of $640 will be charged to applicants' deposit account per their authorization and thus, the requirements of 37 CFR 1.137(b) have been satisfied. Therefore, the request to revive the application abandoned under 35 U.S.C. 371(d) is granted as to the National stage in the United States of America. The $65 surcharge for filing the declaration after the thirty month period will also be charged to applicant's deposit account.

CONCLUSION

For the reasons stated above, the petition to revive under 37 CFR 1.137(b) filed 11 July 2002 in the above-captioned application is **GRANTED**.

This application is being forwarded to the National Stage Processing Division of the Office of PCT Operations for continued processing. The 35 U.S.C. 371(c) date is **11 July 2002.**

Cynthia M. Kratz

Cynthia M. Kratz
Attorney Advisor
PCT Legal Office

Telephone: (703) 306-5467
CMK:cmk

12 JUN 2002

UNITED STATES PATENT AND TRADEMARK OFFICE

COMMISSIONER FOR PATENTS
UNITED STATES PATENT AND TRADEMARK OFFICE
WASHINGTON, D.C. 20231
www.uspto.gov

Ronald L. Grudziecki
BURNS, DOANE, SWECKER & MATHIS
P.O. Box 1404
Alexandria, Virginia 22313-1404

In re Application of	:	
SJOBERG, Per-Olof, et al.	:	
U.S. Application No.: 09/554,684	:	DECISION ON PETITION
PCT No.: PCT/AT98/00281	:	FOR WITHDRAWAL OF
International Filing Date: 19 November 1998	:	ABANDONMENT
Priority Date: 19 November 1997	:	
Attorney's Docket No.: 032287-010	:	
For: MESSAGE TRANSMISSION SYSTEM	:	

This decision is issued in response to applicants' "REQUEST FOR WITHDRAWAL OF HOLDING OF ABANDONMENT BASED ON FAILURE TO RECEIVE OFFICE ACTION" filed 23 January 2002.

BACKGROUND

The background of this application was set forth in detail in the Communication mailed by this Office on 19 September 2001. In that Communication, applicant was informed that the present application was abandoned for failure to respond to the Notification of Missing Requirements Under 35 U.S.C. 371 (Form PCT/DO/EO/905) mailed 16 June 2000.

On 23 January 2002, applicants filed the "REQUEST FOR WITHDRAWAL OF HOLDING OF ABANDONMENT BASED ON FAILURE TO RECEIVE OFFICE ACTION" considered herein. This submission, treated herein as a petition under 37 CFR 1.181, asserts that the Notification Of Missing Requirements was never received by applicants and that the holding of abandonment should therefore be withdrawn.

DISCUSSION

Section 711.03(c)II of the MPEP sets forth the requirements for establishing the failure to receive an Office communication:

> The showing required to establish nonreceipt of an Office communication must include a statement from the practitioner stating that the Office communication was not received by the practitioner and attesting to the fact that a search of the file jacket and docket records indicates that the Office communication was not received. A copy of the

> docket record where the nonreceived Office communication would have been entered had it been received and docketed must be attached to and referenced in practitioner's statement.

Here, the petition contains the required statements from the practitioner that the Notification Of Missing Requirements was not received and that a search of the file jacket and docket records indicates that the Notification Of Missing Requirements was not received.

Regarding the docket records requirement, applicants have attached what appears to be a copy of the docket sheet for this particular file. This docket record is not sufficient because it applies only to this particular application and therefore does not provide evidence as to whether the Notification Of Missing Requirements was received but simply docketed in an incorrect application file. Applicants must provide a copy of the docket record which sets out all the responses due in the USPTO from counsel's office on 17 July 2000, the date on which a response to the Notification Of Missing Requirements was due (docket records should also be supplied for Sunday, 16 July 2000, if applicants' docketing system does not automatically adjust for the fact that the one month reply date fell on a Sunday).

Because the docket sheet submitted by applicant is not adequate, applicant has not satisfied all the requirements for establishing that the Notification Of Missing Requirements was not received. Accordingly, on the present record, the Notification Of Missing Requirements is presumed to have been received by applicants. The holding of abandonment for failure to respond to the Notification Of Missing Requirements therefore remains in effect.

CONCLUSION

For the above reasons, the petition under 37 CFR 1.181 is **DISMISSED** without prejudice. The application remains abandoned with respect to the United States.

If reconsideration on the merits of this petition is desired, a proper response must be filed within **TWO (2) MONTHS** from the mail date of this decision. Any reconsideration request should include a cover letter entitled "Renewed Petition to Under 37 CFR 1.181" and include the required docket records, as discussed above. No petition fee is required.

A copy of the Notification Of Missing Requirements mailed 16 June 2000 is attached hereto. Applicants should note that, in addition to the materials identified in the Notification Of Missing Requirements, a proper translation of the international application into English and the processing fee for late submission of this translation is also required (see discussion in the Communication mailed by this Office on 19 September 2001).

Please direct further correspondence with respect to this matter to the Assistant Commissioner for Patents, Box PCT, Washington, DC 20231, and address the contents of the letter to attention of the PCT Legal Office.

Richard M. Ross
PCT Petitions Attorney
PCT Legal Office
Telephone: (703) 308-6155
Facsimile: (703) 308-6459

enclosure: Notification Of Missing Requirements mailed 16 June 2000.

0 3 SEP 2002

UNITED STATES PATENT AND TRADEMARK OFFICE

COMMISSIONER FOR PATENTS
UNITED STATES PATENT AND TRADEMARK OFFICE
WASHINGTON, D.C. 20231
www.uspto.gov

Ronald L. Grudziecki
BURNS, DOANE, SWECKER & MATHIS
P.O. Box 1404
Alexandria, Virginia 22313-1404

In re Application of	:	
SJOBERG, Per-Olof, et al.	:	
U.S. Application No.: 09/554,684	:	DECISION ON PETITION
PCT No.: PCT/AT98/00281	:	FOR WITHDRAWAL OF
International Filing Date: 19 November 1998	:	ABANDONMENT
Priority Date: 19 November 1997	:	
Attorney's Docket No.: 032287-010	:	
For: MESSAGE TRANSMISSION SYSTEM	:	

In a decision dated 12 June 2002, this office dismissed applicants' "Petition For Withdrawal Of Abandonment." The petition was dismissed because applicants had failed to satisfy the docket records requirement for a grantable petition. Specifically, the decision required applicants:

> [t]o provide a copy of the docket record which sets out all the responses due in the USPTO from counsel's office on 17 July 2000, the date on which a response to the Notification Of Missing Requirements was due (docket records should also be supplied for Sunday, 16 July 2000, if applicants' docketing system does not automatically adjust for the fact that the one month reply date fell on a Sunday).

On 03 July 2002, applicants filed the "Renewed Petition To Withdraw Holding Of Abandonment" considered herein. Attached to the renewed petition are the docket records required by the previous decision. Applicants have therefore now satisfied all the requirements for a grantable petition.

The petition to withdraw the holding of abandonment is **GRANTED**. The Notification Of Abandonment mailed on 28 December 2001 is hereby **WITHDRAWN**.

This application is being forwarded to the National Stage Processing Branch of the International Division for further processing in accord with this decision, including the mailing of a new Notification Of Missing Requirements requiring submission of an executed declaration in compliance with 37 CFR 1.497, the surcharge for filing the declaration later than thirty months

after the priority date, a proper translation of the drawings (see Communication mailed 19 September 2001), and the processing fee for filing the translation later than thirty months after the priority date.

Leonard Smith
PCT Legal Examiner
PCT Legal Office

Richard M. Ross
PCT Petitions Attorney
PCT Legal Office
Telephone: (703) 308-6155
Facsimile: (703) 308-6459

RMR/LS:rmr

Patent and Trademark Office

06 JUN 2000

Patent Cooperation Treaty
Legal Office

Address: Assistant Commissioner for Patents
Box PCT
Washington, D.C. 20231

Gy W. Goodson
LCKHED MARTIN IDAHO TECHNOLOGIES COMPANY
P). Box 1625
Idho Falls ID 83415-3899

Ire Application of CNOSAR, Daniel M., et al. LS. Application No.: 09/554,708 ET No.: PCT/US99/16669 Iternational Filing Date: 22 July 1999 Iriority Date: 24 July 1998 Attorney's Docket No.: LIT-PI-499 Jor: A PROCESS FOR PROCESSING BIODIESEL, LUBRICANTS, AND FUEL AND LUBRICANT ADDITIVES IN A CRITICAL FLUID MEDIUM	DECISION ON PETITION FOR REVIVAL

This decision is issued in response to the "Petition For Revival" filed on 13 April 2000. Applicant has provided authorization to charge Deposit Account No. 05-0565 for the required petition fee.

BACKGROUND

On 22 July 1999, applicants filed international application PCT/US99/16669 which claimed a priority date of 24 July 1998 and which designated the United States.

A Demand was not filed with the International Preliminary Examining Authority electing the United States prior to the expiration of 19 months from the priority date. As a result, the deadline for submission of a copy of the international application (unless previously communicated by the International Bureau) and payment of the basic national fee was 20 months from the priority date, i.e., 24 March 2000.

On 13 April 2000, applicants filed the present Petition For Revival. The Petition was accompanied by: (1) a New Application Transmittal letter; (2) a copy of a specification entitled "Process For Producing Biodiesel Lubricants, And Fuel And Lubricant Additives In A Critical Fluid Medium;" (3) a Combined Declaration And Power Of Attorney; and (4) an Assignment.

DISCUSSION

37 CFR 1.137(b) permits the filing of a petition to revive an abandoned application where the abandonment resulted from an unintentional delay. A grantable petition under this section must include: (1) the required reply, unless previously filed; (2) the petition fee required by law; (3) a statement that the "entire delay in filing the required reply from the due date for the reply until the filing of a grantable petition pursuant to this paragraph was unintentional;" and (4) any terminal disclaimer and fee required pursuant to 37 CFR 1.137(c).

Regarding item (1), the "required reply," section 711.03(c), page 700-93 of the Manual of Patent Examining Procedures states that:

> [g]enerally, the required reply is the reply sufficient to have avoided abandonment, had such reply been timely filed.

Here, the international application was filed with the United States Receiving Office, so applicants are not required to submit a copy of the international application with the national stage application. Thus, the "required reply" is a payment of the basic national fee. The appropriate basic national fee for this application is $690. The papers filed with the Petition For Revival include an authorization to charge Deposit Account 05-0565 for the basic national fee. Thus, applicants have made a submission which would have been "sufficient to have avoided abandonment" had it been made in a timely manner, that is, on or before 24 March 2000. Accordingly, applicants have submitted the "required reply." Item (1) is satisfied.

Item (2) is the petition fee required under 37 CFR 1.17(m). The Petition for Revival provided authorization to charge Deposit Account No.05-0565 for the petition fee. Item (2) is satisfied.

As for item (3), the Petition for Revival expressly states that:

> The entire delay in filing the subject United States national patent application within 20 months of the priority date, based upon corresponding PCT application S/N: PCT/US99/16669 for which the PCT Demand was not filed, until the filing of a grantable petition was unintentional.

The statement in the Petition for Revival is construed as being the statement required by 37 CFR 1.137(b)(3), that is, a statement that the "entire delay in filing the required reply from the due date for the reply until the filing of a grantable petition pursuant to this paragraph was unintentional." Applicants **must** notify this Office if this is **not** a correct interpretation of these statements. Based on this interpretation of the statements contained in the Petition to Revive, item (3) under 37 CFR 1.137(b) is satisfied.

Under the terms of 37 CFR 1.137(c), the terminal disclaimer listed as item (4) above is t required for this application. Applicants have therefore satisfied all the requirements for a antable petition under 37 CFR 1.137(b). The Petition for Revival is granted.

Deposit Account 05-0565 has also been charged $130 as the surcharge for filing the eclaration of inventors more than 20 months after the priority date. In addition, it is noted that e copy of the application submitted with the Petition for Revival is not identical to the ublished international application. As a result, the copy of the application submitted with the etition for Revival cannot be accepted. If applicants seek to modify the international pplication for the national stage, they must submit any desired changes in the form of a reliminary amendment or a substitute specification pursuant to 37 CFR 1.125

The declaration submitted is also unacceptable, because it refers only to the "atttached pecification" which, as noted above, is itself unacceptable (the declaration contains no specific eference to PCT/US99/16669). The declaration therefore does not identify the specification orresponding to the international application, as required by 37 CFR 1.497(a)(2).

CONCLUSION

Applicants' Petition For Revival is **GRANTED**.

This application is being forwarded to the National Stage Processing Branch of the Office of PCT Operations for further processing in accord with this decision, including the issuance of a Notification Of Missing Requirements (Form PCT/DO/EO/905) requiring the submission of a declaration which complies with 37 CFR 1.497(a) and (b) and the payment of the surcharge for filing a proper declaration later than 20 months form the priority date.

Boris Milef
PCT Legal Examiner
PCT Legal Office

Richard M. Ross
PCT Petitions Attorney
PCT Legal Office
Telephone: (703) 308-6155
Facsimile: (703) 308-6459

RMR/BM:rmr

UNITED STATES PATENT and TRADEMARK OFFICE
UNDER SECRETARY OF COMMERCE FOR INTELLECTUAL PROPERTY AND DIRECOR OF THE UNITED STATES PATENT AND TRADEMARK OFFICE
WASHINGTON, D.C. 20231
WWW.USPTO.GOV

Mailed: SEP - 6 2002

THM
Paper Number 8

In re application of: Mans et al.
Serial Number: 09/554,733
Filed: May 19, 2000
For: SPONGE CLOTH BASED ON CELLULOSE AND PRODUCTION THEREOF

DECISION
ON PETITION

This is a decision on the PETITION TO RESTART PERIOD FOR RESPONSE TO OFFICE ACTION, filed July 2, 2002. The petition requests that the period for reply to the Office action dated March 12, 2002 be restarted.

DECISION

The instant PETITION is accepted as a petition, under 37 CFR 1.181(no fee), and is considered pursuant to MPEP 710.06 which relates to resetting the period for response due to late receipt of a PTO action. The requirements for such petitions are as follows:

A. the instant petition is filed within two weeks of the date of receipt of the Office action at the correspondence address

B. a substantial portion of the set reply period had elapsed on the date of receipt (e.g., at least 1 month of a 2- or 3-month reply period had elapsed); and

C. the petition includes (1) evidence showing the date of receipt of the Office action at the correspondence address and (2) a statement setting forth the date of receipt of the Office action at the correspondence address and explaining how the evidence being presented establishes the date of receipt of the Office action at the correspondence address.

A review of the application record and the petitioner's evidence indicates that the Office mailed the action to the address of record. It is noted that the address had not been changed in this application

prior to the filing of the petition. Applicant's evidence for change of address reveals that the address associated with the customer number 26633 has been changed. The instant application was not associated with that customer number until August of 2002.

Accordingly, applicant's request for restarting the period for reply to the Office action is denied, and the time for response continues to run from March 12, 2002, the date of mailing of the Office Action.

The Petition is **DENIED**.

Richard V. Fisher, Director
Technology Center 1700
Chemical and Materials Engineering

Heller Ehrman White & McAuliffe LLP
1666 K Street, NW
Suite 300
Washington, DC 20006

SEP 25 2001

UNITED STATES PATENT AND TRADEMARK OFFICE

COMMISSIONER FOR PATENTS
UNITED STATES PATENT AND TRADEMARK OFFICE
WASHINGTON, D.C. 20231
www.uspto.gov

WILLIAM C. GERSTENZANG
NORRIS MCLAUGHLIN & MARCUS, P.A.
660 White Plains Road, 4th Floor
TARRYTOWN, NY 10591-5144

In re Application of GRUHLKE et al. Application No.: 09/554,781 PCT No.: PCT/EP98/07619 Int. Filing Date: 28 November 1998 Priority Date: 27 November 1997 Attorney's Docket No.: METAL 1278-W For: SLAG CRUSHER	:	DECISION

This decision is in response to applicant's "CONTINUED PROSECUTION APPLICATION (CPA) REQUEST", filed 13 November 2000. The request is **REFUSED** for the following reasons.

BACKGROUND

On 18 May 2000, applicant requested entry into the U.S. national stage under 35 U.S.C. 371 for the above-noted international application and paid $840.00 for the basic filing fee. The application was assigned U.S. serial number 09/554,791.

On 13 June 2000, a Notification of Missing Requirements (Form PCT/DO/EO/905) was mailed to applicant indicating that an oath or declaration executed by the inventors, an English translation of the international application, the $130 surcharge for filing the oath or declaration and the $130 processing fee for filing the translation after the thirty month period were required. Applicant was given one month to respond to the Notification of Missing Requirements. Extensions of time were available under the provisions of 37 CFR 1.136(a).

Thereafter, on 13 November 2000, applicant filed a response to the Notification of Missing Requirements providing a transmittal letter requesting a continued prosecution application (CPA) of 09/554,791 along with a request for a four month extension of time and the appropriate $1,390.00 fee.

On 13 March 2001, a Notification of Abandonment (Form PCT/DO/EO/909) was mailed to applicants indicating that the application was abandoned because applicant had failed to respond to the Notification of Missing Requirements within the time period set therein.

On 16 April 2001, applicant filed an executed declaration and an English translation of the international application along with the $130 surcharge for filing the oath or declaration and the $130 processing fee for filing the translation after the thirty month period.

DISCUSSION

The application papers filed on 18 May 2000 clearly and unambiguously indicated that the application was being filed under 35 U.S.C. 371 as the national stage application of international application No. PCT/EP98/07619 by use of the "TRANSMITTAL LETTER TO THE UNITED STATES DESIGNATED/ELECTED OFFICE... 35 U.S.C. 371" (Form PTO-1390) as the transmittal letter. Since applicant's transmittal letter did request treatment under 35 U.S.C. 371, included the basic national fee and no conflicting instructions were provided, the application was properly processed under 35 U.S.C. 371 and 37 CFR 1.494 rather than 35 U.S.C. 111 and 37 CFR 1.53.

The 13 November 2000 filing requesting treatment of the application as a continued prosecution application was an improper response to the 13 June 2000 Notification of Missing Requirements. Consequently the application went abandoned for failure to respond to the Notification of Missing Requirements.

Pursuant to 37 CFR 1.53(d)(1)(i)(C), a continuation application of a prior nonprovisional application may be filed as a continued prosecution application provided that the prior nonprovisional application is the national stage of an international application filed under 35 U.S.C. 365 before May 29, 2000 and is in compliance with 35 U.S.C. 371. In the instant case, applicant had not filed the English translation of the international application and the oath/declaration along with the appropriate fees for filing after the thirty month period to compliance with the requirements of 35 U.S.C. 371. Thus, it is not appropriate to treat the application as a continued prosecution application at this time.

OPTIONS

To revive his abandoned application, applicant may wish to consider filing a petition to the Commissioner under 37 CFR 1.137(a) or (b) requesting that the application be revived. Any petition filed under 37 CFR 1.137(a) and/or a petition under 37 CFR 1.137(b) requesting that the application be revived must meet the criteria indicated in the recent revision of 37 CFR 1.137. See 62 Fed. Reg. 53131 (October 10, 1997); 1203 Off. Gaz. Pat. Office 63 (October 21, 1997) (Effective Date: 01 December 1997).

The filing of any petition under the unintentional standard cannot be intentionally delayed. A person seeking revival due to unintentional delay cannot make a statement that the delay was unintentional unless the entire delay was unintentional. A statement that the delay was unintentional is not appropriate if the petitioner intentionally delayed the filing of a petition for revival under 37 CFR 1.137(b). There are three periods to be considered during the evaluation of a petition under 37 CFR 1.137: (1) the delay in the reply that originally resulted in the abandonment; (2) the delay in filing an initial petition under 37 CFR 1.137 to revive the application; and (3) the delay in filing a grantable petition under 37 CFR 1.137 to revive the application. See Section 711.03(c) of the Manual of Patent Examining Procedure (MPEP).

This suggestion with regards to the option of filing a petition under 37 CFR 1.137(a) or (b) should <u>not</u> be construed as an indication as to whether or not any such petition(s) will be favorably considered.

CONCLUSION

The Request for Continued Prosecution Application is **REFUSED** .

The Notification of Abandonment mailed on 13 March 2001 remains in effect.

Any further correspondence with respect to this matter should be addressed to the

Assistant Commissioner for Patents, Box PCT, Washington, DC 20231, with the contents of the letter marked to the attention of the PCT Legal Office.

Richard R. Cole
PCT Legal Examiner
PCT Legal Office

Cynthia M. Kratz
Attorney Advisor
PCT Legal Office

CMK/RRC:cmk

Telephone: 703-306-5467

APR 0 4 2002

UNITED STATES PATENT AND TRADEMARK OFFICE

Commissioner for Patents
United States Patent and Trademark Office
Washington, D.C. 20231
www.uspto.gov

NORRIS McLAUGHLIN & MARCUS, P.A.
220 East 42nd street
30th floor
NY, NY 10017

In re Application of	:
GRUHLKE et al	:
Application No.: 09/554,781	: DECISION ON
PCT No.: PCT/EP98/07619	:
Int. Filing Date: 02 July 1999	: PETITION UNDER
Priority Date: 03 July 1998	:
Attorney's Docket No.: NA	: 37 CFR 1.137(b)
For: SLAG CRUSHER	:

This is in response to the "Petition For Revival Of An Application For Patent Abandoned Unintentionally Under 37 CFR 1.137" faxed on 15 November 2001.

BACKGROUND

In a decision from this Office on 25 September 2001, the request for the Continued Prosecution was refused, and the notification of abandonment mailed on 13 March 2001 remained in effect. The decision indicated that applicant may wish to consider filing a petition under 37 CFR 1.137(a) or (b) requesting that the application be revived.

On 23 April 2001, applicant faxed to the United States Patent and Trademark Office (USPTO) the instant petition, which was accompanied by a fee transmittal form.

DISCUSSION

A grantable petition to revive an abandoned application under 37 CFR 1.137(b) must be accompanied by (1) the required reply, unless previously filed. In a nonprovisional application abandoned for failure to prosecute, the required reply may be met by the filing of a continuing application; (2) the petition fee as set forth in § 1.17(m); and (3) a statement that the entire delay in filing the required reply from the due date for the reply until the filing of a grantable petition pursuant to this paragraph was unintentional. The Commissioner may require additional information where there is a question whether the delay was unintentional; and (4) any terminal disclaimer (and fee as set forth in § 1.20 (d)) required pursuant to paragraph (c) of this section.

Petitioner has provided: (1) the proper reply by submitting the basic national filing fee, (2) the petition fee set forth in §1.17(m) and (3) the proper statement under 137(b)(3). In this application, no terminal disclaimer is required.

Accordingly, the petition is deemed to satisfy requirements (1), (2), (3) and, (4) under 37 CFR 1.137(b). Further, a review of the application reveals that the requirements under 35 U.S.C. 371 for entry into the national stage in the US have been satisfied.

DECISION

The petition under 37 CFR 1.137(b) is **GRANTED**.

This application is being returned to the United States Designated/Elected Office (DO/EO/US) for continued processing under 35 U.S.C. 371. The 35 USC 371 date of this application is **16 April 2001**.

The petition fee of $1,280.00 has been charged to Deposit Account No. 14-1263 as authorized in the fee transmittal form.

Rafael Bacares
PCT Legal Examiner
PCT Legal Office
Tel: (703) 308-6312
Fax: (703) 308-6459

UNITED STATES PATENT AND TRADEMARK OFFICE

COMMISSIONER FOR PATENTS
UNITED STATES PATENT AND TRADEMARK OFFICE
WASHINGTON, D.C. 20231
www.uspto.gov

Paper No. 15

Bradley D. Lytle
OBLON, SPIVAK, MCCLELAND,
MAIER & NEUSTADT, P.C.
Fourth Floor
1755 Jefferson Davis Highway
Arlington, Virginia 22202

SEP 11 2002

In re Application of	:	
LARSSON et al.	:	DECISION
Application No. 09/554,884	:	ON PETITION
Filed: August 22, 2000	:	
Attorney Docket No. 9847-0049-6X PCT	:	

This is a decision on the petition, filed April 15, 2002 requesting that the prosecution in the above-identified patent application be suspended for a period of six months under 37 C.F.R. § 1.103(a), and an additional six months, pursuant to MPEP § 1002.02(c)9, for a total of twelve months, beginning with the filing of the subject Petition.

Regarding a suspension on request of the applicant, 37 CFR 1.103(a) provides:

> (a) Suspension for cause. On request of the applicant, the Office may grant a suspension of action by the Office under this paragraph for good and sufficient cause. The Office will not suspend action if a reply by applicant to an Office action is outstanding. Any petition for suspension of action under this paragraph must specify a period of suspension not exceeding six months. Any petition for suspension of action under this paragraph must also include:
> (1) A showing of good and sufficient cause for suspension of action; and
> (2) The fee set forth in § 1.17(h), unless such cause is the fault of the Office

In the Request, to establish cause, Petitioner asserts the claims and issues of the instant application are relevant to the claims and issues in at least U.S. Application No. 08/973,019 which Petitioner has appealed. Further, because the appeal of '019 will materially affect the prosecution of the instant application, the instant application should be suspended pending the decision on appeal of '019.

A review of the record indicates the instant application has claims and issues that are relevant to

appealed case '019 . The claims in the instant application and appealed case '019 are both directed toward the particular structure of the high voltage cable. Consequently, since the outcome of appealed case '019 will materially affect prosecution of the instant application, good and sufficient reasons have been demonstrated to warrant suspension of action.

Accordingly, the petition to suspend prosecution is GRANTED for a period of up to twelve (12) months starting from the filing of petition, April 15, 2002.

Inquiries regarding this decision should be directed to Richard Seidel at (703) 306-3431.

Richard Seidel, Director
Technology Center 2800
Semiconductors, Electrical and Optical
Systems and Components

UNITED STATES PATENT AND TRADEMARK OFFICE

COMMISSIONER FOR PATENTS
UNITED STATES PATENT AND TRADEMARK OFFICE
WASHINGTON, D.C. 20231
www.uspto.gov

Paper No.

Bradley D. Lytle
OBLON, SPIVAK, MCCLELAND,
MAIER & NEUSTADT, P.C.
1940 Duke Street
Alexandria, Virginia 22314

JUN 11 2003

In re Application of BERTIL et al. Application No. 09/554,884 Filed: August 22, 2000 Attorney Docket No. 9847-0049-6X PCT	: : : : :	DECISION ON PETITION

This is a decision on the petition, filed April 15, 2003, requesting that the prosecution in the above-identified patent application be suspended for an additional six months beyond the 12 months that prosecution has been suspended under 37 C.F.R. § 1.103(a).

Regarding a suspension on request of the applicant, 37 CFR 1.103(a) provides:

> (a) Suspension for cause. On request of the applicant, the Office may grant a suspension of action by the Office under this paragraph for good and sufficient cause. The Office will not suspend action if a reply by applicant to an Office action is outstanding. Any petition for suspension of action under this paragraph must specify a period of suspension not exceeding six months. Any petition for suspension of action under this paragraph must also include:
> (1) A showing of good and sufficient cause for suspension of action; and
> (2) The fee set forth in § 1.17(h), unless such cause is the fault of the Office

In the Request, to establish cause, Petitioner asserts the claims and issues of the instant application are relevant to the claims and issues in at least U.S. Application No. 08/973,019 which Petitioner has appealed. Further, because the appeal of '019 will materially affect the prosecution of the instant application, the instant application should be suspended pending the decision on appeal of '019.

A review of the record indicates the instant application has claims and issues that are relevant to appealed case '019 . The claims in the instant application and appealed case '019 are both directed toward the particular structure of the high voltage cable. Consequently, since the

outcome of appealed case '019 will materially affect prosecution of the instant application, good and sufficient reasons have been demonstrated to warrant suspension of action.

Accordingly, the petition to suspend prosecution is GRANTED for a period of up to six (6) months starting from the filing of petition, April 15, 2003.

Inquiries regarding this decision should be directed to Elvin Enad at (703) 308-7619.

Richard Seidel, Director
Technology Center 2800
Semiconductors, Electrical and Optical
Systems and Components

UNITED STATES PATENT AND TRADEMARK OFFICE

COMMISSIONER FOR PATENTS
UNITED STATES PATENT AND TRADEMARK OFFICE
WASHINGTON, D.C. 20231
www.uspto.gov

Paper No. 14

John P. De Luca
DYKEMA GOSSETT PLLC
1300 I Street N.W.
Washington, D.C. 20005

SEP 19 2002

In re Application of
LEIJON et al.
Application No. 09/554,888
Filed: July 11, 2000
Attorney Docket No. 66291-158-2

DECISION
ON PETITION

This is a decision on the petition, filed July 18, 2002 requesting that the prosecution in the above-identified patent application be suspended for a period of six months under 37 C.F.R. § 1.103(a), and an additional six months, pursuant to MPEP § 1002.02(c)9, for a total of twelve months, beginning with the filing of the subject Petition.

Regarding a suspension on request of the applicant, 37 CFR 1.103(a) provides:

> (a) Suspension for cause. On request of the applicant, the Office may grant a suspension of action by the Office under this paragraph for good and sufficient cause. The Office will not suspend action if a reply by applicant to an Office action is outstanding. Any petition for suspension of action under this paragraph must specify a period of suspension not exceeding six months. Any petition for suspension of action under this paragraph must also include:
> (1) A showing of good and sufficient cause for suspension of action; and
> (2) The fee set forth in § 1.17(h), unless such cause is the fault of the Office

In the Request, to establish cause, Petitioner asserts the claims and issues of the instant application are relevant to the claims and issues in at least U.S. Application No. 08/973,019 which Petitioner has appealed. Further, because the appeal of '019 will materially affect the prosecution of the instant application, the instant application should be suspended pending the decision on appeal of '019.

A review of the record indicates the instant application has claims and issues that are relevant to appealed case '019 . The claims in the instant application and appealed case '019 are both directed toward the particular structure of the high voltage cable. Consequently, since the

outcome of appealed case '019 will materially affect prosecution of the instant application, good and sufficient reasons have been demonstrated to warrant suspension of action.

Accordingly, the petition to suspend prosecution is GRANTED for a period of up to twelve (12) months starting from the filing of petition, July 18, 2002.

Inquiries regarding this decision should be directed to Richard Seidel at (703) 306-3431.

Richard Seidel, Director
Technology Center 2800
Semiconductors, Electrical and Optical
Systems and Components

09/554888
UNITED STATES DEPARTMENT OF COMMERCE
Patent and Trademark Office
ASSISTANT SECRETARY AND COMMISSIONER
OF PATENTS AND TRADEMARKS
Washington, D.C. 20231
526 Rec'd PCT/PTO 22 MAY 2000

JW
12/3/99

Response to Decision
2-1-00

Paper No. 11

COPY MAILED

DEC 01 1999

SPECIAL PROGRAMS OFFICE
DAC FOR PATENTS

Oblon Spivak McClelland Maier & Neustadt
1755 Jefferson Davis Highway
Fourth Floor
Arlington VA 22202

In re Application of
Mats Leijon, et al
Application No. 09/147,325
Filed: February 17, 1999
Attorney Docket No. 9847-0001-6X

: RESPONSE TO PETITION UNDER 37 CFR 1.182 SEEKING SPECIAL TREATMENT RELATING TO AN ELECTRONIC SEARCH TOOL, AND DECISION ON PETITION UNDER 37 CFR 1.183 SEEKING WAIVER OF REQUIREMENTS UNDER 37 CFR 1.98

This is a response to a September 29, 1999 Petition Under 37 CFR 1.182, requesting relief from the current requirements for Information Disclosure Statements under 37 CFR 1.98 in view of the need to file multiple applications relating to different aspects of a particular invention. The petition will be treated as two separate petitions: a first petition under 37 CFR 1.182, relating to submission of an electronic search tool and the need to protect proprietary information therein, and a second petition under 37 CFR 1.183, requesting relief from the § 1.98 provision which requires filing paper copies of references being cited in each of many related applications.

A Decision on the petition under 37 CFR 1.182 re the electronic search tool will be issued in due course.

The petition under 37 CFR 1.183 re the submission of 3 paper copies of IDS citations in a holding application is Granted to the extent set forth below.

The Decision is set forth in five parts:

- Part I. Background
- Part II. Petition Under 37 CFR 1.182 - Electronic Search Tool
- Part III. Petition Under 37 CFR 1.183 - Paper Copies

RECEIVED
DEC 03 1999
OBLON, SPIVAK, McCLELLAND,
MAIER & NEUSTADT, P.C.

- Part IV. Summary
- Part V. Further Correspondence

Part 1. Background

The instant national stage application filed under 35 U.S.C. 371 currently contains claims 77-153 with three independent claims. The instant application is one of about 200 U.S. applications (either filed or to be filed) with each U.S. application having as many as 40 corresponding foreign applications (either filed or to be filed), the applications relating to different aspects of the invention. An Information Disclosure Citation List has been submitted that lists 259 U.S. patents, 369 foreign patent documents, and 43 other references for a total of 671 citations. Additionally, a list of related cases has been supplied containing 31 U.S. applications and 52 PCT applications. Paper copies have not been supplied in the related applications of any of the citations or the identified related cases.

37 CFR 1.56(b)(1) requires disclosure to the Office of information that "establishes, by itself or in combination with other information, a prima facie case of unpatentability of a claim...." Such disclosure can be made by an Information Disclosure Statement (IDS) in the manner prescribed by 37 CFR 1.97 and 1.98. 37 CFR 1.56(a).

Petitioner asks "[w]hether the information cited in the manner proposed in [petition] Section 3.1.1 ... is a disclosure that is sufficient to meet the requirements of 37 CFR § 1.56." To the extent that this question refers to the content of the disclosure and the particulars of the subject applications, the Office will not answer the question. It is Office practice not to attempt to define how an individual "ensures" compliance with the rule in a particular application. See, e.g., MPEP 2004. Because determinations on this issue require an evaluation of the intent of the party involved, the Office declines to investigate the question. See MPEP 2010. To the extent that Petitioner's question concerns the form in which the disclosure is provided, rule 56 permits a disclosure in a combination of paper and electronic formats.

Petitioner, in addition to meeting the duty set forth in 37 CFR 1.56 to disclose material information, also wishes to disclose to the Office information that may not meet the definition of

materiality as set forth in the rule[1]. Information identified by U.S. or foreign examiners in any of the related U.S. and foreign applications would be cited in each of the related U.S. applications.[2] In addition, Petitioner seeks to submit other information in each of the related U.S. applications, such as all the co-pending U.S. applications that relate to the invention (useful for determining possible double patenting rejections), and foreign search reports. Petition, page 4.

Rather than be required to submit, via a paper copy, each piece of information in each application each time the information is obtained, Petitioner seeks to have:

(1)(a) one application (the instant application) identified as a "holding" application which would contain a complete set of paper copies of references; the paper copies to be submitted in only the "holding" application;

(b) the other related pending U.S. applications, hereafter referred to as the bulk filing applications, will not contain the paper set of reference copies but will contain other information, e.g., a copy of the decision on petition[3] permitting such procedure and a copy of the Form 1449 (or equivalent);[4] and

(2) an "electronic search tool"[5] containing different types of information.

The information supplied via the paper copies would be updated monthly, rather than as received from U.S. and foreign examiners, and cancellation of this arrangement would be an option for both

---

[1]Reference to MPEP 2001.05, Petition, page 3.

[2]Petition, page 3. The present petition requesting relief does not set forth any commitment nor intent by applicant to screen such information for relevancy to each of the U.S. applications in which the information is being cited.

[3]The original of which would be in the instant holding application.

[4]See, Petition under 37 CFR 1.182, *infra*.

[5]See, Petition under 37 CFR 1.183, *infra*.

Petitioner and the Office upon notice. These, and other more specific conditions, are discussed in further detail in regard to the § 1.182 petition, below.

Petitioner has essentially requested relief in two areas: (1) treatment of information in an electronic search tool, to be submitted independent of any particular application, as in compliance with IDS submission requirements for all bulk filing applications, and (2) the ability to provide the paper copies of each reference in an IDS submission in only one of the bulk filing applications (the instant holding application) as well as two additional sets of copies rather than as is normally required in each application for which the reference (IDS citation) is to be considered. These two areas of relief are independent of each other and drawn toward different regulations. Accordingly, the petition has been treated as two petitions, and the present decision addresses the two areas of requested relief separately. While it is undeniable that relief in both areas would be of benefit to Petitioner, the granting of relief in one area does not, in fact, require the granting of relief in the other. Moreover, in view of the need to further consider the requested relief related to the electronic search tool, deciding the requested relief issues separately permits at this time a partial grant of the original petition.[6]

Part II. Petition under 37 CFR 1.182- Electronic Search Tool

The issues involving the electronic search tool are more extensive than those relating to the requirement for paper copies in each bulk filing application and more time is needed to fully consider and address them. Accordingly, the petition under § 1.182 shall not be decided at this time and is not treated in the instant decision on the § 1.183 petition although it will continue to be considered, with a decision rendered in due course.

[6]It is recognized that petitioner believes the issues presented by the petition may not be decided independent of one another as both the paper copy issue and the electronic search tool issue represent the most complete solution to duty of disclosure issues under 37 CFR 1.56, Petition, fn. 5.

Part III. Petition Under 37 CFR 1.183 - Paper Copies

The submitted petition fee of $130 will be treated as the § 1.183 petition fee.

37 CFR 1.98 requires that any information disclosure statement provide a copy of all patents, publications or other information submitted under 37 CFR 1.97 for consideration by the Office. 37 CFR 1.97 notes that information disclosure statements are considered in regard to the application in which they are filed. See also MPEP 609, page 600-102, right-hand column, and page 600-103, left-hand column.

Paper copies: Petitioner notes that the instant application is one of 200 bulk filing applications that will be or have been filed in regard to a particular technology. Accordingly, Petitioner requests that individual paper copies of each reference, brought to the attention of the Office in regard to any one individual application, not be required to be submitted in each such application. Rather, it is requested that three complete sets of paper copies be permitted to be filed: one set for the instant application which will be designated as a holding application; one set to be used to establish new subclasses for the technology; and one set to be used as a reference set should either or both of the other two sets become corrupted (Petition, pages 6 and 7).[7]

Once past the initial IDS submission, it is proposed that applicant would update the IDS submissions once a month, rather than every time a new reference is found, although the time frames required by § 1.97 would have to be complied with, which may mean that submissions may occur more frequently than once a month.

Form 1449: In addition to submission of the three sets of paper copies in the instant "holding" application, the petition proposes that each of the bulk filing applications would receive a Form 1449 listing the reference citations (Petition, page 7) and the Form 1449 (in each of the bulk filing applications) would be updated, pursuant to the time requirements of § 1.97, each time the three sets of paper copies are updated. The petition is

[7]It would presumably up to the Technology Center to determine how best to store the reference set and how it is to be accessed.

silent as to whether other types of information that may be submitted in the holding application IDS, e.g., concise explanations of foreign language documents under § 1.98(a)(3), would also be supplied in all the bulk filing applications.

Suspension of action: In view of the use of the instant application as a holding application (to contain a complete set of paper copies of reference citations, which can be consulted by the examiner when examining any of the other bulk filing applications that have a Form 1449 but not the paper copies), the petition states that upon allowance of the instant holding application the right is reserved to file a petition to suspend action in the instant application so that the application can remain as the holding application (Petition, page 7). Alternatively, upon agreement of the Assignee and a Director of the Technology Center involved, an alternate application may be designated as the holding application.

New subclasses: The petition envisions an affirmative duty on the Technology Center to establish new subclasses that will include each of the references submitted during the course of prosecution of the bulk filing applications.[8] In addition, the Office is to agree that "[e]xaminers will be required to search these newly created subclasses" (from submissions by the Assignee and later by others) "as part of the routine patent prosecution process." Petition, page 8.

Termination: Petitioner seeks a right of termination,[9] which is to be a mutual option. Termination is to be by written notice, to the attorney of record if the Office terminates and the filing of a termination request and by contacting the Director of TC 2800 if applicant terminates. Conventional IDS procedures would begin three months after notice of termination.

---

[8]The new subclasses will later be supplemented by references supplied by others who may file applications related to the same technology.

[9]Although termination is discussed under a section related to licensing of the electronic search tool and the petition generally (Petition, pages 10 and 11), it is presumed that Petitioner intends to have the termination provision apply to the waiver of paper copies if that alone is granted.

37 CFR 1.183 provides relief for extraordinary situations, when justice requires suspension of any requirement of the regulations which is not a requirement of the statutes. The instant petition urges that not only would applicant be spared the necessity of submitting duplicative paper copies of references in 200 applications, but also the Office would benefit from not having to handle and store the duplicative sets of copies. While there may be some negative effects from the Office's point of view in terms of making the copies available to different examiners handling the various applications,[10] on balance, there is seen to be sufficient benefit to justify waiver in this instance.

Accordingly, the petition under 37 CFR 1.183 is granted to the extent indicated and under the terms and conditions as are set forth below.[11]

---

[10]Even thought the technology of the applications may be related, the specific claims of the applications may require different classifications of the applications and the quantity of applications would dictate the need for more than one examiner to timely examine the applications.

[11]The waiver being granted in this instance is not intended to set a general precedent where there is more than one application containing related subject matter. The Office, however, intends to use the instant grant to study whether the opportunity for waiver can be extended to other applicants in similar circumstances, and whether a more general program can be announced. One factor that will be considered is the extent to which relevant information (that may not be necessarily required by § 1.56(b) but which would nonetheless be useful to the examiner, e.g., § 1.56(a)(1) and (2)), is submitted rather than huge dumps of nonrelevant or marginally relevant information.

It is noted that while the petition only refers to the submission of citations that are made by both U.S. and foreign examiners, the term "include" is used (Petition, page 2) which is open ended. The Petition states that it is the intention to submit a copy of every reference identified both by U.S. examiners in the 200 U.S. applications and by foreign examiners in as many as 40 corresponding foreign applications for each U.S. application (Petition, page 3). It has not been stated whether the current 671 reference citations currently of record represent only those citations made by U.S. and foreign examiners or whether they include citations from other sources, such as a

The § 1.98(a)(2) requirement for (the submission of) a copy of each IDS citation in a bulk filing application will be waived in the bulk filing application provided that the following 8 conditions are complied with:

1) Three paper copies of each IDS citation are or have been submitted to the Office;

2) The (bulk filing) application for which waiver of § 1.98(a)(2) is desired refers to the instant holding application, such as by a claim of priority under 35 U.S.C. 120, or as containing related technology;

3) The information is or has also been cited in the holding application;

   Note: Applicant is not required to cite in each bulk filing application every item of information that is cited in the instant holding application. Items should be cited in each bulk filing application on the basis of relevancy and materiality to the particular claims in the bulk filing application and what each piece of information teaches.

   A waiver is not granted (for the requirement to supply a paper copy of an IDS citation in another bulk filing application) where the citation is not, or has not been, made in the instant holding application.

4) A copy of this Decision is filed in the bulk filing application;

5) Explanatory information related to a particular citation, such as the concise explanation of a foreign language reference under § 1.98(a)(2), once submitted in the holding application must be supplied in each bulk filing application where the citation is made.

6) The Office accepts and specifically reserves the right to terminate the waiver grant in regard to § 1.98(a)(2) without provision of reasons. In such event, a two month period will be given where paper copies would

---

preexamination search or third party citations. See also Petition, page 19.

have to be supplied in all applications where new citations are made. Should a termination of the waiver be desired by the Office, the Office will provide written notice to the correspondence address of record. Termination by applicant may be by returning to compliance with § 1.98(a)(2) without formal notice thereof and no transition/continuing period after termination is required.

7) The grant of the § 1.183 petition re § 1.98(a)(2) does not indicate that the Office would favorably treat a petition to suspend action under § 1.103(a) should the instant application be allowed. Issuance of the instant application as a patent is not seen to terminate its usefulness either: (1) as a holding application for references by examiners working on other related applications,[12] or (2) as a vehicle for the storage of references to be cited even after the patent issues (35 U.S.C. 301, 37 CFR 1.501, and MPEP 2202). Should the instant application become abandoned, the issue of continued introduction of paper copies of new citations could be taken up at that time. The Office, however, may consider suspending or taking other appropriate action in the instant holding application in the event the holding application is allowed, if it is in the best interest of the Office to do so.

8) The Office has established a series of Official Digests in Class 174 based on the technology represented by the instant invention (a classification schedule thereof is attached). As is the case will all Digests, their usefulness will be continually evaluated. The Office will place the holding application's references in the Digests as they are determined to require such placement and as new ones are brought to the attention of the Office either by Petitioner or a third party. A search of the Digests themselves or what they contain (such as the holding application or reference copy sets), either in paper copy or electronic form, will be

[12]The patent file can be kept in the Technology Center for easy reference, or rather than rely upon the patent, either the reference set of paper copies could be utilized, or the Office may decide to rely on the Digests being created.

conducted when mandatory based on the classification of the claims, or when deemed advisable - on a case by case basis.

Part IV. Summary

A Decision on the Petition under 37 CFR 1.182, drawn toward submission of the electronic search tool, will be acted upon in due course when all outstanding issues are resolved.

The petition under 37 CFR 1.183 agreeing to supply three copies of each IDS citation in a holding application and requesting waiver of the paper copy requirement for submission in every related application under § 1.98(a)(2) is granted, however, the following is not agreed to:

- the grant of a future petition under 37 CFR 1.103 for suspension from publication of the holding application should it be allowed,
- the required search of subclasses from one of the three sets of paper copies and placement of one of the other sets of paper copies therein, and
- any termination provision more than two months (rather than the three months that the petition sets forth) from notice of termination.

Part V. Further Correspondence

Further correspondence with respect to this matter should be addressed to Hiram H. Bernstein, Senior Legal Advisor, Special Program Law Office, as follows:

By mail: Commissioner of Patents and Trademarks
Box DAC
Washington, D.C. 20231

By FAX: (703) 308-6916
Attn: Special Program Law Office

By hand: Special Program Law Office
Crystal Plaza Four, Suite 3C23
2201 South Clark Place
Arlington, VA 22202

Telephone inquiries specific to this matter should be directed to Mr. Bernstein at (703) 305-9285.

The instant application will be retained by this Office: for a period of TWO MONTHS to await any response to the instant Decision, and for the purpose of continuing review of the § 1.182 petition re the electronic search tool.

Robert J. Spar
Director
Special Program Law Office
Office of the Deputy Assistant Commissioner
for Patent Policy and Projects

Attachment: List of Digests 13-33

Digest 13 HIGH VOLTAGE CABLE (E.G., ABOVE 10KV, CORONA PREVENTION, ETC.)
Digest 14 . Having a particular cable application (e.g., winding, etc.)
Digest 15 .. In a power generation system (e.g., prime-mover dynamo, generator system, etc.)
Digest 16 .. In a motive power system (e.g., electric motor control system, etc.)
Digest 17 .. In an electric power conversion, regulation, or protection system
Digest 18 .. In a power distribution network
Digest 19 .. In a dynamo-electric machine
Digest 20 ... Stator
Digest 21 ... Rotor
Digest 22 ... Winding, per se
Digest 23 .. In a circuit breaker, relay, or switch
Digest 24 .. In an inductive device (e.g., reactor, electromagnet, etc.)
Digest 25 ... Transformer
Digest 26 . Having a plural-layer insulation system
Digest 27 .. Including a semiconductive layer
Digest 28 ... Plural semiconductive layers
Digest 29 . Having a semiconductive layer
Digest 30 . Having insulation with a particular dimension or geometry
Digest 31 . Having a shield or metallic layer
Digest 32 . Having means for cooling
Digest 33 . Method of cable manufacture, assembly, repair, or splicing

UNITED STATES PATENT AND TRADEMARK OFFICE

COMMISSIONER FOR PATENTS
UNITED STATES PATENT AND TRADEMARK OFFICE
WASHINGTON, D.C. 20231
www.uspto.gov

John P. De Luca
DYKEMA GOSSETT PLLC
1300 I Street N.W.
Washington, D.C. 20005

NOV 20 2003

In re Application of: LEIJON et al. Application No. 09/554,888 Filed: July 11, 2000 For: A WIND POWER UNIT	))))))))	**DECISION ON PETITION UNDER 37 CFR § 1.103(a) REQUESTING SUSPENSION OF ACTION**

This is a decision on the petition under 37 CFR 1.103(a) filed on July 28, 2003 requesting a further suspension of action for a period of six (6) months in the instant application.

The petition states that applicants have appealed the rejections of all claims in related matter, Application Serial No. *08/973,019,* and that Applicant's representative believes that the issue presented in the appeal are relevant to the present application. Applicant therefore, requests an additional suspension to await a determination by the Board of Patent Appeals and Interferences in (Serial No. *08/973,019*) the related application. The fee set forth in 37 C.F.R. §1.117(h) of $130.00 was paid with this submission.

The BPAI rendered a decision in *08/973,019* affirming the Examiner on November 27, 2002, *granted-in-part* a request for reconsideration on April 17, 2003, and rendered a final decision after reconsideration on August 27, 2003. Thus, the basis for the request for suspension no longer applies.

Accordingly, since there is no showing of good and sufficient cause to further delay prosecution, as required under 37 C.F.R. §1.103(a), the **REQUEST** for **SUSPENSION** is **DENIED**.

The application file is being forwarded to the Examiner of record for appropriate action in response to applicant's amendment filed on July 18, 2002.

Richard Seidel, Group Director
Technology Center 2800
Semiconductors, Electrical and Optical
Systems and Components

UNITED STATES PATENT AND TRADEMARK OFFICE

COMMISSIONER FOR PATENTS
UNITED STATES PATENT AND TRADEMARK OFFICE
WASHINGTON, D.C. 20231
www.uspto.gov

Paper No. 13

Bradley D. Lytle
OBLON, SPIVAK, MCCLELAND,
MAIER & NEUSTADT, P.C.
1940 Duke Street
Alexandria, Virginia 22314

JUN 11 2003

In re Application of	:	
SCHUTTE et al.	:	DECISION
Application No. 09/554,921	:	ON PETITION
Filed: August 28, 2000	:	
Attorney Docket No. 9847-0062-6X PCT	:	

This is a decision on the petition filed on March 20, 2002 and a subsequent petition filed on March 20, 2003. The petition of March 20, 2002 requested that prosecution in the above-identified patent application be suspended for a period of 12 months under 37 C.F.R. § 1.103(a) and pursuant to MPEP § 1002.02(c)9. The subsequent petition requests that prosecution be suspended for an additional six months beyond the 12 month request, for a total of eighteen months.

Regarding a suspension on request of the applicant, 37 CFR 1.103(a) provides:

> (a) Suspension for cause. On request of the applicant, the Office may grant a suspension of action by the Office under this paragraph for good and sufficient cause. The Office will not suspend action if a reply by applicant to an Office action is outstanding. Any petition for suspension of action under this paragraph must specify a period of suspension not exceeding six months. Any petition for suspension of action under this paragraph must also include:
> (1) A showing of good and sufficient cause for suspension of action; and
> (2) The fee set forth in § 1.17(h), unless such cause is the fault of the Office

In the Request, to establish cause, Petitioner asserts the claims and issues of the instant application are relevant to the claims and issues in at least U.S. Application No. 08/973,019 which Petitioner has appealed. Further, because the appeal of '019 will materially affect the prosecution of the instant application, the instant application should be suspended pending the decision on appeal of '019.

A review of the record indicates the instant application has claims and issues that are relevant to appealed case '019 . The claims in the instant application and appealed case '019 are both directed toward the particular structure of the high voltage cable. Consequently, since the outcome of appealed case '019 will materially affect prosecution of the instant application, good and sufficient reasons have been demonstrated to warrant suspension of action.

Accordingly, the petitions to suspend prosecution is GRANTED for a period of up to eighteen (18) months starting from the filing of the petition filed on March 20, 2002.

Inquiries regarding this decision should be directed to Elvin Enad at (703) 308-7619.

Richard Seidel, Director
Technology Center 2800
Semiconductors, Electrical and Optical
Systems and Components

FEB 01 2002

UNITED STATES PATENT AND TRADEMARK OFFICE

#5

COMMISSIONER FOR PATENTS
UNITED STATES PATENT AND TRADEMARK OFFICE
WASHINGTON, D.C. 20231
www.uspto.gov

Kevin L. Bastian
Townsend and Townsend and Crew LLP
2 Embarcadero Center, 8th Floor
San Francisco, CA 94111

In re Application of	:	
Kaslow, David C., et al.	:	
Application No.: 09/554,960	:	
PCT No.: PCT/US98/25742	:	DECISION ON
Int. Filing Date: 04 December 1998	:	PETITION
Priority Date: 05 December 1997	:	UNDER 37 CFR 1.181
Attorney Docket No.: 15280-3421PC	:	AND 37 CFR 1.137(a)
For: VACCINES FOR BLOCKING TRANSMISSION	:	
OF PLASMODIUM VIVAX	:	

This decision is in response to "Petition For Revival of an International Application For Patent Designating the U.S. Abandoned Unavoidably Under 37 CFR 1.137(a)," which has also been treated as a petition under 37 CFR 1.181 for the reasons set forth below. As authorized in the communication, the required 1.137(a) petition fee has been charged to deposit account 20-1430.

BACKGROUND

On 04 December 1998, applicants filed international application PCT/US98/25742. A copy of the international application was communicated to the United States Patent and Trademark Office (USPTO) from the International Bureau on 17 June 1999.

On 01 July 1999, applicants filed a Demand for international preliminary examination, prior to the expiration of nineteen months from the priority date. Accordingly, the thirty month period for paying the basic national fee in the United States expired on 05 June 2000.

On 22 May 2000, applicants filed a submission for entry into the national stage in the United States which was accompanied by, *inter alia*, the U.S. Basic National Fee.

On 23 June 2000, USPTO mailed a NOTIFICATION OF MISSING REQUIREMENTS UNDER 35 U.S.C. 371 (Form PCT/DO/EO/905) indicating, *inter alia*, that an oath or declaration in compliance with 37 CFR 1.497(a)-(b) and the surcharge under 37 CFR 1.492(e) for providing the oath or declaration later than thirty months from the priority date were required. The Notification of Missing Requirements set a one month extendable time period for reply.

On 01 June 2001, USPTO mailed a NOTIFICATION OF ABANDONMENT (Form PCT/DO/EO/909) indicating that the above-identified application was abandoned for failure to respond to the NOTIFICATION OF MISSING REQUIREMENTS mailed 23 June 2000.

On 09 October 2001, applicants filed the instant "Petition For Revival of an International Application For Patent Designating the U.S. Abandoned Unavoidably Under 37 CFR 1.137(a)," which was accompanied by, *inter alia,* a declaration of Michele Simone, and a printout of an excerpt of the docket for 08/01/00 to 08/31/00 .

DISCUSSION

Nonreceipt of the Notification of Missing Requirements

If applicants can establish nonreceipt of the NOTIFICATION OF MISSING REQUIREMENTS, then the application was never abandoned. In such case, the holding of abandonment will be withdrawn pursuant to 37 CFR 1.181. See MPEP § 711.03(c), para. I. Accordingly, the instant petition has been treated as a petition under 37 CFR 1.181 rather than under 37 CFR 1.137(a).

The showing required to establish nonreceipt of an Office communication is set forth in the notice entitled *Withdrawing the Holding of Abandonment When Office Actions Are Not Received,* 1156 O.G. 53 (Nov. 16, 1993). The showing must include: (1) a statement by the practitioner that the Office action was not received by the practitioner; (2) a statement attesting that a search of the file jacket and docket records indicates that the Office action was not received; and (3) a copy of the docket record where the non-received Office action would have been entered had it been received (the docket record must also be referenced in practitioner's statement).

Item (1) has been met. As to (1), practitioner's statement that "Accordingly, as far as we are aware, such a Notice of Missing Requirements was never received by us," satisfies this requirement.

Item (2) has been met. As to (2), practitioner states, "After receipt of the Notice of Abandonment, we diligently examined our corresponding file and docket records to determine if the Notice of Missing Requirements had been received by us. Such a notice was not found in the corresponding file, and out docket records do no reflect receipt of such a notice."

Item (3) has not been met. (3) Docket clerk Michele Simone states that "attached is an excerpt of the relevant part of the Docket identifying entries having a due date of August 23, 2000." However, the Notification of Missing Requirements set a one month period for reply. As such, the relevant date is July 23, 2000.

Petition to Revive Unavoidably Abandoned International Application for Patent

A petition to revive an application for patent unavoidably abandoned under 37 CFR 1.137(a) must be accompanied by: (1) the required reply, (2) the petition fee, (3) a satisfactory showing that the entire delay in filing the required reply from the due date for the reply until the

filing of a grantable petition to 1.137(a) was unavoidable and (4) a terminal disclaimer if application was filed before June 8, 1995.

Items (2) and (4) have been met. (2) The petition fee will be charged to deposit account no. 20-1430, as authorized by the petition. (4) A terminal disclaimer is not required as the application was filed after June 8, 1995.

Item (1) has not been met. The required reply is an executed oath or declaration. Neither has not been filed. Further, a Continued Prosecution Application is improper as the requirements of 35 U.S.C. §371 have not been met. See 37 CFR 1.53(d)(1)(C).

Item (3) has not been met. As applicant has not established that the Notification of Missing Requirements was not received, it is assumed that it was received. As such, the delay was not unavoidable.

CONCLUSION

For the reasons set forth above, the petition under 37 CFR 1.181 is **DISMISSED** without prejudice.

The petition under 37 CFR 1.137(a) is **DISMISSED** without prejudice.

The application remains **ABANDONED**.

If reconsideration on the merits of this petition is desired, a proper response must be filed within TWO (2) MONTHS from the mail date of this decision. Any reconsideration request should include a cover letter entitled "Renewed Petition Under 37 CFR 1.181 and 1.137(a)." No additional petition fee is required.

Please direct any further correspondence with respect to this matter to the Commissioner of Patents and Trademarks, Box PCT, Washington, D.C. 20231, and address the contents of the letter to the attention of the Office of PCT Legal Administration.

Boris Milef
PCT Legal Examiner
PCT Legal Administration

Erin M. Pender
Attorney Advisor
PCT Legal Administration

Telephone: 703-305-0455
Facsimile: 703-308-6459

0 5 NOV 2002

UNITED STATES PATENT AND TRADEMARK OFFICE

COMMISSIONER FOR PATENTS
UNITED STATES PATENT AND TRADEMARK OFFICE
WASHINGTON, D.C. 20231
www.uspto.gov

Kevin L. Bastian
Townsend and Townsend and Crew LLP
2 Embarcadero Center, 8th Floor
San Francisco, CA 94111

In re Application of Kaslow, David C., et al. Application No.: 09/554,960 PCT No.: PCT/US98/25742 Int. Filing Date: 04 December 1998 Priority Date: 05 December 1997 Attorney Docket No.: 15280-3421PC For: VACCINES FOR BLOCKING TRANSMISSION OF PLASMODIUM VIVAX	DECISION ON PETITIONS UNDER 37 CFR 1.181 AND 37 CFR 1.137(a)

This decision is in response to "Request For Reconsideration of Petition Under 37 CFR 1.181 and 1.137(a)," filed in the United States Patent and Trademark Office on 09 September 2002.

BACKGROUND

On 04 December 1998, applicants filed international application PCT/US98/25742. On 01 July 1999, applicants filed a Demand for international preliminary examination, prior to the expiration of nineteen months from the priority date. Accordingly, the thirty month period for paying the basic national fee in the United States expired on 05 June 2000.

On 22 May 2000, applicants filed a submission for entry into the national stage in the United States which was accompanied by, *inter alia*, the U.S. Basic National Fee.

On 23 June 2000, USPTO mailed a NOTIFICATION OF MISSING REQUIREMENTS UNDER 35 U.S.C. 371 (Form PCT/DO/EO/905) indicating, *inter alia*, that an oath or declaration in compliance with 37 CFR 1.497(a)-(b) and the surcharge under 37 CFR 1.492(e) for providing the oath or declaration later than thirty months from the priority date were required. The Notification of Missing Requirements set a one month extendable time period for reply.

On 01 June 2001, USPTO mailed a NOTIFICATION OF ABANDONMENT (Form PCT/DO/EO/909) indicating that the above-identified application was abandoned for failure to respond to the NOTIFICATION OF MISSING REQUIREMENTS mailed 23 June 2000.

On 09 October 2001, applicants filed the instant "Petition For Revival of an International Application For Patent Designating the U.S. Abandoned Unavoidably Under 37 CFR 1.137(a)," which was accompanied by, *inter alia*, a declaration of Michele Simone, and a printout of an excerpt of the docket for 08/01/00 to 08/31/00.

On 01 February 2002, the Office mailed Decision on Petition Under 37 CFR 1.181 and 37 CFR 1.137(a).

On 09 September 2002, applicants filed the instant renewed petition along with a Certificate of Mailing under 37 CFR 1.8 and the fee for a four month extension of time.

DISCUSSION

Applicants have provided conflicting certificates of mailing under 37 CFR 1.8. The transmittal form indicates that the correspondence was deposited on 23 July 2002. The statement by Jill R. Clarke is dated 30 August 2002 and the envelope is postmarked 30 August 2002. The certificates of mailing on the petition and on the declaration by Michele Simone indicate they were deposited on 30 August 2002. Applicants must explain these discrepancies. Without the benefit of the certificates of mailing, the reply will be untimely.

Nonreceipt of the Notification of Missing Requirements

The showing required to establish nonreceipt of an Office communication is set forth in the notice entitled *Withdrawing the Holding of Abandonment When Office Actions Are Not Received*, 1156 O.G. 53 (Nov. 16, 1993). The showing must include: (1) a statement by the practitioner that the Office action was not received by the practitioner; (2) a statement attesting that a search of the file jacket and docket records indicates that the Office action was not received; and (3) a copy of the docket record where the non-received Office action would have been entered had it been received (the docket record must also be referenced in practitioner's statement).

Items (1) and (2) were previously met.

Item (3) has not been met. Docket clerk Michele Simone states that "attached is an excerpt of the relevant part of the Docket identifying entries having a due date of July 23, 2000." Michele Simone must indicate that the docket record reflects all replies docketed for 23 July 2000. See MPEP §711.03(c). If this is not the case, applicants must provide a copy of the docket record for 23 July 2000 and indicate that it shows all replies docketed for 23 July 2000.

Petition to Revive Unavoidably Abandoned International Application for Patent

A petition to revive an application for patent unavoidably abandoned under 37 CFR 1.137(a) must be accompanied by: (1) the required reply, (2) the petition fee, (3) a satisfactory showing that the entire delay in filing the required reply from the due date for the reply until the filing of a grantable petition to 1.137(a) was unavoidable and (4) a terminal disclaimer if application was filed before June 8, 1995.

Items (2) and (4) were previously met.

Item (1) has not been met. The required reply is an executed oath or declaration. The declaration submitted does not comply with 37 CFR 1.497(a)-(b) as the copy of the declaration executed by David Kaslow does not list all three inventors. The declaration must list all inventors and applicants are required to submit the declaration as executed by the inventors. No alteration, however minor, may be made to the declaration subsequent to its execution by the inventors.

Item (3) has not been met. As applicant has not established that the Notification of Missing Requirements was not received, it is assumed that it was received. As such, the delay was not unavoidable.

CONCLUSION

For the reasons set forth above, the petition under 37 CFR 1.181 is **DISMISSED** without prejudice.

The petition under 37 CFR 1.137(a) is **DISMISSED** without prejudice.

The application remains **ABANDONED**.

If reconsideration on the merits of this petition is desired, a proper response must be filed within TWO (2) MONTHS from the mail date of this decision. Any reconsideration request should include a cover letter entitled "Renewed Petition Under 37 CFR 1.181 and 1.137(a)." No additional petition fee is required.

Please direct any further correspondence with respect to this matter to the Commissioner of Patents and Trademarks, Box PCT, Washington, D.C. 20231, and address the contents of the letter to the attention of the Office of PCT Legal Administration.

Leonard E. Smith
PCT Legal Examiner
PCT Legal Administration

Erin M. Pender
Attorney Advisor
PCT Legal Administration

Telephone: 703-305-0455
Facsimile: 703-308-6459

05 SEP 2003

UNITED STATES PATENT AND TRADEMARK OFFICE

#9

COMMISSIONER FOR PATENTS
UNITED STATES PATENT AND TRADEMARK OFFICE
P.O. BOX 1450
ALEXANDRIA, VA 22313-1450
www.uspto.gov

Kevin L. Bastian
Townsend and Townsend and Crew LLP
2 Embarcadero Center, 8th Floor
San Francisco, CA 94111

In re Application of Kaslow, David C., et al. Application No.: 09/554,960 PCT No.: PCT/US98/25742 Int. Filing Date: 04 December 1998 Priority Date: 05 December 1997 Attorney Docket No.: 15280-3421PC For: VACCINES FOR BLOCKING TRANSMISSION OF PLASMODIUM VIVAX	DECISION ON PETITIONS UNDER 37 CFR 1.181 AND 37 CFR 1.137(a)

This decision is in response to "Request For Reconsideration of Petition Under 37 CFR 1.181 and 1.137(a)," filed in the United States Patent and Trademark Office on 12 February 2003.

BACKGROUND

On 04 December 1998, applicants filed international application PCT/US98/25742. On 01 July 1999, applicants filed a Demand for international preliminary examination, prior to the expiration of nineteen months from the priority date. Accordingly, the thirty month period for paying the basic national fee in the United States expired on 05 June 2000.

On 22 May 2000, applicants filed a submission for entry into the national stage in the United States which was accompanied by, *inter alia*, the U.S. Basic National Fee.

On 23 June 2000, USPTO mailed a NOTIFICATION OF MISSING REQUIREMENTS UNDER 35 U.S.C. 371 (Form PCT/DO/EO/905) indicating, *inter alia*, that an oath or declaration in compliance with 37 CFR 1.497(a)-(b) and the surcharge under 37 CFR 1.492(e) for providing the oath or declaration later than thirty months from the priority date were required. The Notification of Missing Requirements set a one month extendable time period for reply.

On 01 June 2001, USPTO mailed a NOTIFICATION OF ABANDONMENT (Form PCT/DO/EO/909) indicating that the above-identified application was abandoned for failure to respond to the NOTIFICATION OF MISSING REQUIREMENTS mailed 23 June 2000.

On 09 October 2001, applicants filed the instant "Petition For Revival of an International Application For Patent Designating the U.S. Abandoned Unavoidably Under 37 CFR 1.137(a)," which was accompanied by, *inter alia*, a declaration of Michele Simone, and a printout of an excerpt of the docket for 08/01/00 to 08/31/00.

On 01 February 2002, the Office mailed Decision on Petition Under 37 CFR 1.181 and 37 CFR 1.137(a).

On 09 September 2002, applicants filed the instant renewed petition along with a Certificate of Mailing under 37 CFR 1.8 and the fee for a four month extension of time.

On 05 November 2002, the Office mailed Decision on Petition Under 37 CFR 1.181 and 37 CFR 1.137(a), dismissing applicants' petitions without prejudice.

On 12 February 2003, applicants submitted the instant renewed petition. It included a certificate of mailing indicating that the papers were mailed on 05 February 2003 and the fee for a one month extension of time.

DISCUSSION

The showing required to establish nonreceipt of an Office communication is set forth in the notice entitled *Withdrawing the Holding of Abandonment When Office Actions Are Not Received*, 1156 O.G. 53 (Nov. 16, 1993). The showing must include: (1) a statement by the practitioner that the Office action was not received by the practitioner; (2) a statement attesting that a search of the file jacket and docket records indicates that the Office action was not received; and (3) a copy of the docket record where the non-received Office action would have been entered had it been received (the docket record must also be referenced in practitioner's statement).

Items (1) and (2) were previously met.

Item (3) has now been met.

The declarations submitted on 12 February 2003 comply with 37 CFR 1.497(a)-(b).

CONCLUSION

For the reasons set forth above, the petition under 37 CFR 1.181 is **GRANTED**. The Petition Under 37 CFR 1.137(a) is **DISMISSED AS MOOT**.

The Notification of Abandonment (Form PCT/DO/EO/909) mailed 01 June 2001 is **VACATED**.

The application has an international filing date of 04 December 1998 under 35 U.S.C. §363 and a date of **12 February 2003** under 35 U.S.C. §371. This application is being forwarded to the National Stage Processing Division of the Office of the PCT Operations for continued processing.

Richard Cole
PCT Legal Examiner
PCT Legal Administration

Erin M. Pender
Attorney Advisor
PCT Legal Administration

Telephone: 703-305-0455
Facsimile: 703-308-6459

The opinion in support of the decision being entered today was not written for publication and is not binding precedent of the Board.

Paper No. 15

UNITED STATES PATENT AND TRADEMARK OFFICE

BEFORE THE BOARD OF PATENT APPEALS AND INTERFERENCES

Ex parte GAYLE MARIE FRANKENBACH, ELLEN SCHMIDT BAKER, REBECCA GAYL BAKER, MARC JOHAN DECLERCQ, HUGO JEAN MARIE DEMEYERE, RYAN MATTHEW HEIDEN, CHARLES ALBERT HENSLEY, BRENT ALAN KOLB, RUTH ANNE MURPHY, RONALD EDWARD PEGOLI, TOAN TRINH, ERROL HOFFMAN WAHL, MICHAEL R. WEAVER, DEAN LARRY DUVAL, JOHN HENRY SHAW, JR., MASAE NOGAMI and RONGHUI WU

MAILED
MAY 2 9 2003
U.S. PATENT AND TRADEMARK OFFICE
BOARD OF PATENT APPEALS
AND INTERFERENCES

Appeal No. 2003-0777
Application No. 09/554,969

ON BRIEF

Before KIMLIN, WARREN and JEFFREY T. SMITH, Administrative Patent Judges.

KIMLIN, Administrative Patent Judge.

DECISION ON APPEAL

This is an appeal from the final rejection of claims 1, 12-21, 23 and 25-39. The final rejection of claims 22 and 24

has been withdrawn by the examiner. Claims 22 and 24 are objected to as being dependent upon a rejected claim (see page 3 of answer).

A copy of illustrative claim 1 is appended to this decision.

The examiner relies upon the following reference as evidence of obviousness:

Trinh et al. (WO '169) WO 97/03169 Jan. 30, 1997

Appellants' claimed invention is directed to a clear, or translucent, liquid fabric softener composition comprising, inter alia, a principal solvent having a ClogP within the claimed range, and an electrolyte in an amount of from about 0.5% to about 10% by weight. According to appellants, "[t]he utilization of relatively high levels of electrolyte allows the utilization of a relatively broad range of principal solvents to provide a clear or translucent composition" (page 2 of brief, third paragraph).

Appealed claims 1, 12-21, 23 and 25-39 stand rejected under 35 U.S.C. § 103 as being unpatentable over WO '169.

Appellants submit at page 2 of the brief that "[c]laims 1 and 15-39 stand or fall together." Accordingly, with the exception of claims 12, 13 and 14, for which appellants provide

separate arguments, all the appealed claims stand or fall together with claim 1.

We have thoroughly reviewed each of appellants' arguments for patentability. We are in complete agreement with the examiner, however, that the claimed subject matter would have been obvious to one of ordinary skill in the art within the meaning of § 103 in view of the applied prior art. Accordingly, we will sustain the examiner's rejection for essentially those reasons expressed in the answer.

There is no dispute that WO '169, like appellants, discloses a clear, liquid fabric softener composition comprising a principal solvent having a ClogP of about 0.15 to about 0.64, which range falls directly within the claimed range. Appellants also do not dispute that the reference discloses that the fabric softener composition may also comprise up to about 2% electrolytes, which range overlaps the claimed range of about 0.5 % to about 10% by weight. In essence, it is appellants' contention that the reference does not disclose the claimed ranges for a principal solvent and electrolyte. Appellants point out that the

highest level of electrolyte exemplified in the reference is 0.25%.

Appellants' arguments are unavailing since it is well settled that it is a matter of prima facie obviousness when a claimed range encompasses or overlaps a prior art range. In re Woodruff, 919 F.2d 1575, 1578, 16 USPQ2d 1934, 1936 (Fed. Cir. (1990); In re Wertheim, 541 F.2d 257, 263, 191 USPQ 90, 97 (CCPA 1976); In re Malagari, 499 F.2d 1297, 1303, 182 USPQ 549, 553 (CCPA 1974). Also, when, as here, the prior art discloses values that fall directly within a claimed range, there is an anticipation of the claimed range. As for appellants' argument that WO '169 discloses that the presence of electrolyte is optional, and that the reference teaches a more preferable and exemplified amount of electrolyte that is below the claimed lower limit, the examiner has properly explained that all the teachings of a reference must be considered in determining obvious under § 103, and such consideration is not limited to the preferred embodiments of the reference. In re Lamberti, 545 F.2d 747, 750, 192 USPQ 278, 280 (CCPA 1976).

Also, contrary to appellants' argument, it is not necessary for a finding of obviousness that WO '169 teaches that higher concentrations of electrolyte enable the use of a broader range of solvents in formulating a clear or translucent fabric softener composition. In our view, it is sufficient for a finding of prima facie obviousness that WO '169 teaches a class of clear liquid fabric softener compositions which fall within the scope of the appealed claims.

Regarding separately argued claims 12 and 13, the referenced ranges for ClogP and amount of electrolyte overlap the claimed ranges, and the reference teaches values that fall directly within the claimed ranges.

As a final point, we note that appellants base no argument upon objective evidence of nonbviousness, such as unexpected results.

In conclusion, based on the foregoing, the examiner's decision rejecting the appealed claims is affirmed.

No time period for taking any subsequent action in connection with this appeal may be extended under 37 CFR § 1.136(a).

AFFIRMED

EDWARD C. KIMLIN Administrative Patent Judge	)
CHARLES F. WARREN Administrative Patent Judge	) BOARD OF PATENT APPEALS AND INTERFERENCES
JEFFREY T. SMITH Administrative Patent Judge	)

eck/vsh

Appeal No. 2003-0777
Application No. 09/554,969

THE PROCTER & GAMBLE COMPANY
PATENT DIVISION
IVORYDALE TECHNICAL CENTER - BOX 474
5299 SPRING GROVE AVENUE
CINCINNATI, OH 45217

Appendix
Claim 1

1. Clear, or translucent liquid fabric softener composition comprising:

A. from about 2% to about 80% by weight of the composition of fabric softener;

B. at least an effective level of principal solvent having a ClogP of from about -2.0 to about 2.6 to provide a clear or translucent composition;

C. from about 0.5 % to about 10% by weight of the composition of electrolyte;

D. optionally, from 0% to about 15% by weight of the composition of phase stabilizer selected from the group consisting of:

1. nonionic surfactants derived from saturated and/or unsaturated primary, secondary, and/or branched, amine, amide, amine-oxide, fatty alcohol, fatty acid, alkyl phenol, and/or alkyl aryl carboxylic acid compounds having from about 6 to about 22 carbon atoms in a hydrophobic chain, wherein at least one active hydrogen of said compounds is ethoxylated with $\leq$ 50 ethylene oxide moieties to provide an HLB of from about 8 to about 20;

2. nonionic surfactants with bulky head groups selected from:

a. surfactants having the formulas:

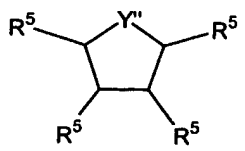

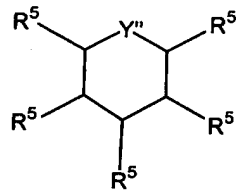

wherein Y″ = N or O; and each R^5 is selected independently from the following: -H,-OH, $-(CH_2)xCH_3$, $-O(OR^2)_z-H$, $-OR^1$, $-OC(O)R^1$, and $-CH(CH_2-(OR^2)_{z''}-H)-CH_2-(OR^2)_{z'}-C(O)R^1$, wherein R^1 is selected from the group consisting of saturated or unsaturated, primary, secondary or branched chain alkyl or alkyl-aryl hydrocarbons; said hydrocarbon chain having a length of from about 6 to about 22, wherein each R^2 is selected from the following groups or combinations of the following groups: $-(CH2)_{n-}$ and/or $-[CH(CH_3)CH_2]-$ wherein n is from I to 4; and wherein x is from 0 to about 3, and z, z′, and z″ are from about 5 about 20;

b. polyhydroxy fatty acid amide surfactants of the formula:

$$R^2-C(O)-N(R^1)-Z$$

wherein: each R^1 is H, C_1 -C_4 hydrocarbyl, C_1 -C_4 alkoxyalkyl, or hydroxyalkyl; R^2 is a C_5-C_{21} hydrocarbyl moiety; and each Z is a polyhydroxyhydrocarbyl moiety having a linear hydrocarbyl chain with at least 3 hydroxyls directly connected to the chain, or an ethoxylated derivative thereof;

c. surfactants having the formula

$$R^1\text{-}C(O)\text{-}Y'\text{-}[CR^5)]_m\text{-}CH_2O(R^2O)_zH$$

wherein R^1 is selected from the group consisting of saturated or unsaturated, primary, secondary or branched chain alkyl or alkyl-aryl hydrocarbons; said hydrocarbon chain having a length of from about 6 to about 22; Y′ is selected from the following groups: -O-; -N(A)-; and mixtures thereof-, and A is selected from the following groups: H; R^1; $-(R^2\text{-}O)_z\text{-}H$; $-(CH_2)xCH_3$; phenyl, or substituted aryl, wherein x is from 0 to about 3 and total z is from about 5 to about 30; each R^2 is selected from the following groups or combinations of the following groups: $-(CH2)_n-$ wherein n is from about 1 to about 4 and/or $-[CH(CH_3)CH_2]-$; each R^5 is selected from the following groups: -OH; and $-O(R^2O)_z\text{-}H$; and m is from about 2 to about 4; and

d. mixtures thereof;

3. surfactant complexes formed by one surfactant ion being neutralized with surfactant ion of opposite charge or an electrolyte ion that is suitable for reducing dilution viscosity;

4. block copolymer surfactants comprising polyethylene oxide moieties and propylene oxide moieties;

5. cationic surfactants having the formula:

$$\{R^1m\ -(R^2\text{-}O)_z\text{-}H]_p\}^+X-$$

wherein R^1 is selected from the group consisting of saturated or unsaturated, primary, secondary or branched chain alkyl or alkyl-aryl hydrocarbons; said hydrocarbon chain having from about 6 to about 22 carbon atoms; each R^2 is selected from

the following groups or combinations of the following groups: $-(CH_2)_n-$ and/or $-[CH(CH_3)CH_2]-$; Y is selected from the following groups: $= N^+-(A)_q$; $-(CH_2)_n-N^+-(A)_q$; $-B-(CH_2)_n-N^+-(A)_2$; -(phenyl)-N+-(A)q; -(B-phenyl)-$N^+-(A)_q$; with n being from about 1 to about 4, wherein each A is independently selected from the following groups: H; C_{1-5} alkyl; R^1; $-(R^2O)_z-$ H; $-(CH_2)_xCH_3$; phenyl, and substituted aryl; where x is from 0 to about 3; and each B is selected from the following groups: -O-; -NA-; $-NA_2$; -C(O)O-; and -C(O)N(A)-; wherein R^2 is defined as hereinbefore; q = 1 or 2; m + p + q = 4; total z per molecule is from about 3 to about 50; and X^- is an anion which is compatible with fabric softener actives and adjunct ingredients; and

6. mixtures thereof,

E. optionally, from 0 to about 15% perfume; and

F. the balance water

wherein said electrolyte and said phase stabilizer, when present, provide at least one improvement selected from: lower dilution viscosity; the same, or better, stability with less principal solvent; and/or the use of principal solvents with a ClogP outside the range of from about 0.15 to about 0.64.

01 DEC 2000

UNITED STATES PATENT AND TRADEMARK OFFICE

Commissioner for Patents
United States Patent and Trademark Office
Washington, D.C. 20231
www.uspto.gov

Finnegan, Henderson, Farabow, Garrett & Dunner, LLP
1300 I Street, N.W.
Washington, DC 20005-3315

In re Application of van Scharrenburg et al	:	
U.S. Application No.: 09/555,139	:	DECISION ON
Int. Application No.: PCT/EP98/07553	:	
Int. Filing Date: 24 November 1998	:	REQUEST FOR STATUS
Priority Date: 25 November 1997	:	
Attorney Docket No.: 01975.0024	:	UNDER 37 CFR 1.42
For: VACCINES WITH AN LTB ADJUVANT	:	

This is in response to the papers filed 28 July 2000. The submission is being treated as a request for status under 37 CFR 1.42.

BACKGROUND

On 24 November 1998, applicants filed international application PCT/EP98/07553, which claimed priority of an earlier European Patent Office application filed 25 November 1997. A copy of the international application was communicated to the USPTO from the International Bureau on 03 June 1999. A Demand for international preliminary examination, in which the United States was elected, was filed on 07 May 1999, prior to the expiration of nineteen months from the priority date. Accordingly, the thirty-month period for paying the basic national fee in the United States expired at midnight on 25 May 2000.

On 25 May 2000, applicants filed national stage papers with the United States Designated/Elected Office (DO/EO/US) under 35 U.S.C. 371 including, inter alia, the requisite basic national fee.

On 28 June 2000, the DO/EO/US mailed a Notification of Missing Requirements Under 35 U.S.C. 371 (Form PCT/DO/EO/US/905) indicating that an oath or declaration under 37 CFR 1.497 must be filed along with a surcharge for providing the oath or declaration later than thirty months from the priority date.

On 28 July 2000, applicants filed a declaration signed by all of the inventors except Etienne Agsteribbe, who according to the declaration is deceased.

DISCUSSION

37 CFR 1.42 provides, "In case of the death of the inventor, the legal representative (executor, administrator, etc.) of the deceased inventor may make the necessary oath or declaration, and apply for and obtain the patent." The declaration filed 28 July 2000 is not acceptable because it is not executed by the legal representative of Etienne Agsteribbe on his/her behalf. Furthermore, the declaration filed 28 July 2000 does not identify the citizenship of any of the inventors.

CONCLUSION

For the reasons above, the request for status under 37 CFR 1.42 is DISMISSED without prejudice.

If reconsideration on the merits of the request for status is desired, a proper response must be filed within ONE (1) MONTH from the mail date of this decision. Any reconsideration request should include a cover letter entitled "Renewed Request for Status Under 37 CFR 1.42". No petition fee is required. Extensions of time may be obtained under 37 CFR 1.136(a). Failure to file a proper response to this decision will result in ABANDONMENT of the application.

Please direct further correspondence with respect to this matter to the Commissioner for Patents, Box PCT, Washington, D.C. 20231, and address the contents of the letter to the attention of the PCT Legal Office.

Leonard Smith

Bryan Tung
PCT Legal Examiner
PCT Legal Office

Leonard Smith
PCT Legal Examiner
PCT Legal Office

Telephone: 703-308-6614
Facsimile: 703-308-6459

MAY 0 8 2001

UNITED STATES PATENT AND TRADEMARK OFFICE

Commissioner for Patents
United States Patent and Trademark Office
Washington, D.C. 20231
www.uspto.gov

Finnegan, Henderson, Farabow, Garrett & Dunner, LLP
1300 I Street, N.W.
Washington, DC 20005-3315

In re Application of van Scharrenburg et al	:	
U.S. Application No.: 09/555,139	:	DECISION ON RENEWED
Int. Application No.: PCT/EP98/07553	:	
Int. Filing Date: 24 November 1998	:	REQUEST FOR STATUS
Priority Date: 25 November 1997	:	
Attorney Docket No.: 01975.0024	:	UNDER 37 CFR 1.42
For: VACCINES WITH AN LTB ADJUVANT	:	

This is in response to applicants' "Renewed Request for Status Under 37 C.F.R. 1.42" filed 13 December 2000.

BACKGROUND

On 24 November 1998, applicants filed international application PCT/EP98/07553, which claimed priority of an earlier European Patent Office application filed 25 November 1997. A copy of the international application was communicated to the USPTO from the International Bureau on 03 June 1999. A Demand for international preliminary examination, in which the United States was elected, was filed on 07 May 1999, prior to the expiration of nineteen months from the priority date. Accordingly, the thirty-month period for paying the basic national fee in the United States expired at midnight on 25 May 2000.

On 25 May 2000, applicants filed national stage papers with the United States Designated/Elected Office (DO/EO/US) under 35 U.S.C. 371 including, inter alia, the requisite basic national fee.

On 28 June 2000, the DO/EO/US mailed a Notification of Missing Requirements Under 35 U.S.C. 371 (Form PCT/DO/EO/US/905) indicating that an oath or declaration under 37 CFR 1.497 must be filed along with a surcharge for providing the oath or declaration later than thirty months from the priority date.

On 28 July 2000, applicants filed a declaration signed by all of the inventors except Etienne Agsteribbe, who according to the declaration is deceased. The papers filed on 28 July 2000 were treated as a request for status under 37 CFR 1.42.

On 01 December 2000, the PCT Legal Office of the USPTO dismissed the 28 July 2000 request for status on grounds that the 28 July 2000 declaration is not executed by the legal representative of the deceased inventor and because the declaration does not identify the citizenship of the inventors.

On 13 December 2000, applicants filed the present renewed request for status including a declaration signed by Irene Agsteribbe-Servaas, who according to the declaration is the executor of the deceased inventor.

DISCUSSION

37 CFR 1.42 provides, "In case of the death of the inventor, the legal representative (executor, administrator, etc.) of the deceased inventor may make the necessary oath or declaration, and apply for and obtain the patent."

The declaration filed 13 December 2000 is in compliance with 37 CFR 1.42.

CONCLUSION

For the reasons above, the papers filed 13 December 2000 are ACCEPTED under 37 CFR 1.42.

The application has an international filing date of 24 November 1998 and a date under 35 U.S.C. 371(c) of 13 December 2000.

This application is being forwarded to the DO/EO/US for further processing in accordance with this decision.

Bryan Tung
PCT Legal Examiner
PCT Legal Office

Leonard Smith
PCT Legal Examiner
PCT Legal Office

Telephone: 703-308-6614
Facsimile: 703-308-6459

UNITED STATES PATENT AND TRADEMARK OFFICE

Commissioner for Patents
United States Patent and Trademark Office
P.O. Box 1450
Alexandria, VA 22313-1450
www.uspto.gov

CROWELL & MORING LLP
PO BOX 14300
WASHINGTON DC 20044

COPY MAILED

NOV 0 6 2006

OFFICE OF PETITIONS

ON PETITION

In re Application of	:
Hermann Kuenzner et al	:
Application No. 09/555,144	:
Filed: August 28, 2000	:
Attorney Docket No. 951/48802	:

This is a decision on the petition under 37 CFR 1.137(b), filed August 23, 2006, to revive the above-identified application.

The petition is **GRANTED**.

The petition satisfies the conditions for revival pursuant to the provisions of 37 CFR 1.137(b) in that (1) the reply in the form of an RCE and an amendment (2) the petition fee; and (3) the required statement of unintentional delay have been received. Accordingly, the reply to the Final Rejection of November 24, 2003, is accepted as having been unintentionally delayed.

The above-identified application has been abandoned for an extended period of time. The Patent and Trademark Office is relying on petitioner's duty of candor and good faith and accepting the statement that the entire delay in filing the required reply from the due date for the reply until the filing of a grantable petition pursuant to 37 CFR 1.137(b) was unintentional. See Changes to Patent Practice and Procedure, 62 Fed. Reg. at 53160 and 53178; 1203 Off. Gaz. Pat. Office at 88 and 103 (responses to comments 64 and 109) (applicant obligated under 37 CFR 10.18 to inquire into the underlying facts and circumstances when providing the statement required by 37 CFR 1.137(b) to the Patent and Trademark Office).

Telephone inquiries concerning this decision should be directed to the undersigned at (571) 272-3208.

This matter is being referred to Technology Center AU 2174.

Karen Creasy

Karen Creasy
Petitions Examiner
Office of Petitions

SPE RESPONSE FOR CERTIFICATE OF CORRECTION

Paper No.:20051223

DATE : December 23, 2005

TO SPE OF : ART UNIT 1642

SUBJECT : Request for Certificate of Correction on Patent No.: 6,800,436 B1

A response is requested with respect to the accompanying request for a certificate of correction.

Please complete this form and return with file, within **7** days to:
Certificates of Correction Branch - PK 3-910
Palm location **7590** - Tel. No. 305-8201

With respect to the change(s) requested, correcting Office and/or Applicant's errors, should the patent read as shown in the certificate of correction? No new matter should be introduced, nor should the scope or meaning of the claims be changed.

Thank You For Your Assistance **Certificates of Correction Branch**

The request for issuing the above-identified correction(s) is hereby:
Note your decision on the appropriate box.

☒ **Approved** **All** changes apply.

☐ **Approved in Part** Specify below which changes **do not** apply.

☐ **Denied** State the reasons for denial below.

Comments:

JEFFREY SIEW
SUPERVISORY PATENT EXAMINER
12/23/05

SPE: Jeffrey Siew **Art Unit** 1642

UNITED STATES PATENT AND TRADEMARK OFFICE

Commissioner for Patents
United States Patent and Trademark Office
P.O. Box 1450
Alexandria, VA 22313-1450
www.uspto.gov

Joseph J. Laks
Thomson Licensing LLC
2 Independence Way, Patent Operations
P.O. Box 5312
PRINCETON, NJ 08543

COPY MAILED

MAR 1 0 2008

OFFICE OF PETITIONS

In re Application of	:	
Thomas Anthony Stahl, et. al.	:	
Application No. 09/555,188	:	ON PETITION
Filed: September 13, 2000	:	
Attorney Docket No. RCA 88863	:	

This is a decision on the petition under 37 CFR 1.137(b), filed on March 22, 2007, to revive the above-identified application.

The application became abandoned for failure to properly respond to the Notice of Allowance and Fee(s) Due mailed August 25, 2006. A Notice of Abandonment was mailed on December 22, 2006.

It is not apparent whether the person signing the instant petition was ever given a power of attorney or authorization of agent to prosecute the above-identified application. However, in accordance with 37 CFR 1.34(a), the signature of Catherine A. Ferguson appearing on the petition shall constitute a representation to the United States Patent and Trademark Office that he/she is authorized to represent the particular party in whose behalf he/she acts.

37 CFR 1.137(b)(3) requires a statement that the entire delay in filing the required reply from the due date for the reply until the filing of a grantable petition pursuant to 37 CFR 1.137(b) was unintentional. Since the statement contained in the instant petition varies from the language required by 37 CFR 1.137(b)(3), the statement is being construed as the statement required by 37 CFR 1.137(b)(3) and petitioner must notify the Office if this is **not** a correct interpretation of the statement.

As authorized, $1,400 for payment of the issue fee has been charged to petitioner's deposit account.

The petition satisfies the requirements of 37 CFR 1.137(b), in that, petitioner has supplied (1) the reply in the form of $1,400 for payment of the issue fee; (2) the petition fee of $1,500; and (3) an adequate statement of unintentional delay. Therefore, the petition is **GRANTED**.

This application file is being referred to the Office of Data Management for further processing into a patent.

Telephone inquiries concerning this decision should be directed to the undersigned at (571) 272-3226.

Andrea Smith
Petitions Examiner
Office of Petitions

UNITED STATES PATENT AND TRADEMARK OFFICE

Commissioner for Patents
United States Patent and Trademark Office
P.O. Box 1450
Alexandria, VA 22313-1450
www.uspto.gov

Date : 11/26/07

Patent No. : 7133421 B1
Ser. No. : 09/555,236
Inventor(s) : PUHAKAINEN, PEKKA
Issued : 11/07/06
Title : **METHOD AND EQUIPMENT FOR IDENTIFYING A LOGICAL CHANNEL**
Docket No. : 270689

Re: Request for Certificate of Correction

Consideration has been given your request for the issuance of a certificate of correction for the above-identified patent under the provisions of Rule(s) 1.322 and/or 1.323.

Assignees' names and addresses (assignment data) printed in a patent, are based *solely* on information supplied in the appropriate space for identifying the assignment data, i.e., item 3 of the Issue Fee Transmittal Form PTOL-85B. Granting of a request under 37 CFR 3.81(b) is required to correct applicant's error providing ***incorrect or erroneous*** assignment data, *before* issuance of a Certificate of Correction, under 37 CFR 1.323 *(see Manual of Patent Examining Procedures (M.P.E.P) Chp.1400, sect. 1481).* This procedure is required *at any time after the issue fee is paid*, including after issuance of the patent.

In view of the foregoing, your request, in this mater, is hereby denied.

A request to correct the Assignee under 37 CFR 3.81(b) should include:

A. **the processing fee set forth in 37 CFR 1.117(h) (currently $130);**
B. a statement that the failure to include the correct assignee name on the PTOL-85B was inadvertent; and
C. a copy of the Notice of Recordation of Assignment Document, reflecting the reel and frame number where the assignment(s) is recorded and/or reflecting proof of *the date* the assignment was submitted for recordation.

In the Request, Applicant(s) may request that the file be forwarded to Certificates of Correction Branch, for issuance of a Certificate of Correction, if the Request is granted.

Any request under 37 CFR 3.81(b) should be directed to the following address or facsimile number:

By mail: Mail Stop PETITIONS

Commissioner for Patents
Post Office Box 1450
Alexandria, VA 22313-1450

By hand: Customer Service Window
Mail Stop Petitions
Randolph Building
401 Dulany Street
Alexandria, VA 22314

By fax: (703) 872-9306
ATTN: Office of Petitions

If a fee (currently $100) was previously submitted for consideration of a Request for Certificate of Correction, under CFR 1.323, to correct assignment data, no additional fee is required.

Lamonte M. Newsome

Lamonte M. Newsome
For Cecelia Newman
Decisions & Certificates
of Correction Branch
(703) 308-9390 #112 or (703) 308-8309

PILLSBURY WINTHROP SHAW PITTMAN, LLP
P.O. BOX 10500
MCLEAN VA 22102

LMN

UNITED STATES PATENT AND TRADEMARK OFFICE

Commissioner for Patents
United States Patent and Trademark Office
P.O. Box 1450
Alexandria, VA 22313-1450
www.uspto.gov

BARNES & THORNBURG, LLP
750 17TH STREET, NW SUITE 900
WASHINGTON, DC 20006-4675

COPY MAILED

MAY 16 2008

OFFICE OF PETITIONS

In re Patent No. 7,133,421 :
Application No. 09/555,236 :
Filed: May 25, 2000 : ON PETITION
Issued: November 7, 2006 :
Attorney Docket No. 270689 :

This is a decision on the petition filed November 5, 2007 and December 20, 2007, which is being treated as a request under 37 CFR 3.81(b)[1] to correct the name of the assignee on the front page of the above-identified patent by way of a Certificate of Correction.

The request is **GRANTED**.

The patent file is being forwarded to the Certificates of Correction Branch for issuance of the requested Certificate of Correction.

The file does not indicate a change of address has been submitted, although the address given on the petition differs from the address of record. If appropriate, a request to change the address of record should be filed. Petitioner should note that a change of correspondence address would not affect the fee address. Therefore, if petitioner desires to receive future correspondence, which **may** be mailed regarding maintenance fees for the above-identified patent, the "fee address" and/or "customer number" forms should be submitted.

Telephone inquiries concerning this decision may be directed to the undersigned at (571) 272-3206. Inquiries regarding the issuance of a certificate of correction should be directed to the Certificate of Correction Branch at (571) 272-4200.

Liana Walsh
Petitions Examiner
Office of Petitions

[1] *See* MPEP 1309, subsection II; and Official Gazette of June 22, 2004.

17 OCT 20

UNITED STATES PATENT AND TRADEMARK OFFICE

COMMISSIONER FOR PATENTS
UNITED STATES PATENT AND TRADEMARK OFFICE
P.O. BOX 1450
ALEXANDRIA, VA 22313-1450
www.uspto.gov

BIRCH, STEWART, KOLASCH & BIRCH, LLP
P.O. Box 747
Falls Church, VA 22040-0747

In re Application of	:	
HIGASHI, Mitsuhiro *et al*	:	
Application No.: 09/555,255	:	
PCT No.: PCT/JP99/05273	:	**DECISION**
Int. Filing Date: 28 September 1999	:	
Priority Date: 28 September 1998	:	
Attorney Docket No.: 1155-0198P	:	
For: ORTHOALKYLATION CATALYST FOR PHENOL AND PROCESS . . .	:	

This decision is in response to applicants' "Petition for Revival of an Application for Patent Abandoned Unintentionally Under 37 C.F.R. § 1.137(b)" filed 25 July 2003 and "Supplemental Petition for Revival" filed 10 September 2003.

BACKGROUND

On 17 July 2003, a communication was mailed notifying applicants that the above-captioned application was abandoned for failing to meet the requirements of 35 U.S.C. 371. A copy of the international application was not submitted to the USPTO until after the commencement of the national stage on 28 May 2000. It was also noted that applicants' explanation regarding the difference in spelling of the last name of the first inventor submitted on 07 May 2002 was a transliteration error and this explanation met the requirements of section 201.03 of the MPEP.

On 25 July 2003, applicants filed a petition to revive for an unintentional abandonment pursuant to 37 CFR 1.137(b) which was accompanied by, *inter alia*, a petition fee of $650.00

On 14 August 2003, the International Bureau (IB) submitted a letter to Mr. Leonard Smith of the USPTO regarding their failure to transmit a copy of the international application to the USPTO as a designated Office.

On 10 September 2003, applicants filed a supplemental petition to revive requesting that consideration be given to converting the 25 July 2003 petition to an unavoidable petition under 37 CFR 1.137(a) which was accompanied by, *inter alia*, a copy of the 14 August 2003 lettter to the USPTO.

DISCUSSION

Applicants request that the above-captioned petition be considered first under

the unavoidable standard of 37 CFR 1.137(a). A petition to revive an abandoned application on the grounds that the failure to timely reply was unavoidable pursuant to 37 CFR 1.137(a) must be accompanied by: (1) the required reply; (2) a showing to the satisfaction of the Commissioner that the entire delay in filing the required reply from the due date for the reply until the filing of a grantable petition pursuant to 37 CFR 1.137(a) was unavoidable; (3) any terminal disclaimer required pursuant to 37 CFR 1.137(c); and (4) the petition fee.

Here, applicants argue that the abandonment was unavoidable because the failure to communicate a copy of the international application to the USPTO was the fault of the IB. In support of this claim, applicants provided a copy of a letter dated 14 August 2003 from the IB to the USPTO which states that "the International Bureau, pursuant to PCT Article 20(1)(a) and Rule 47.1(a) and (b), should have communicated a copy of the international application to the designated Office. The Article 20 communication should have taken place within the time limit . . . due to an oversight, the international Bureau failed to send a copy of the international application to the USPTO as a designated Office within that time limit."

After a careful review of the evidence, it is concluded that this situation meets the unavoidable standard of 37 CFR 1.137(a). The petition fee has been paid. No terminal disclaimer is required. Accordingly, all requirements of 37 CFR 1.137(a) have been satisfied.

CONCLUSION

Applicants' petition under 37 CFR 1.137(a) is **GRANTED**.

Applicants paid a $650.00 petition fee on 25 July 2003. The fee for a petition to revive pursuant to 37 CFR 1.137(a) is $55.00. Accordingly, the difference of $595.00 has been credited to applicants' Deposit Account No. 02-2448.

The application has an international filing date of 28 September 1999 under 35 U.S.C. 363, and a 35 U.S.C. 371 date of **26 July 2002**.

This application is being forwarded to the National Stage Processing Division of the Office of PCT Operations for continued processing.

James Thomson
Attorney Advisor
Office of PCT Legal Administration

Tel.: (703) 308-6457

UNITED STATES PATENT AND TRADEMARK OFFICE

Commissioner for Patents
United States Patent and Trademark Office
P.O. Box 1450
Alexandria, VA 22313-1450
www.uspto.gov

BIRCH STEWART
KOLASCH & BIRCH, LLP
PO BOX 747
FALLS CHURCH VA 22040-0747

MAILED

JUN 0 8 2009

OFFICE OF PETITIONS

In re Patent No. 6,951,966	:	
Issue Date: October 04, 2005	:	
Application No. 09/555,255	:	NOTICE UNDER 37 CFR. 1.28(c)
Filed: July 26, 2002	:	
Attorney Docket No. 1155-0198P	:	

This is a notice regarding your request for acceptance of a fee deficiency submission under 37 CFR 1.28. On September 1, 1998, the Court of Appeals for the Federal Circuit held that 37 CFR 1.28(c) is the sole provision governing the time for correction of the erroneous payment of the issue fee as a small entity. **See DH Technology v. Synergystex International, Inc. 154 F.3d 1333, 47 USPQ2d 1865 (Fed. Cir. Sept. 1, 1998).**

The Office no longer investigates or rejects original or reissue applications under 37 CFR 1.56. **1098 Off. Gaz. Pat. Office 502 (January 3, 1989)**. Therefore, nothing in this Notice is intended to imply that an investigation was done.

Your fee deficiency submission under 37 CFR 1.28 is hereby **ACCEPTED**.

This application is no longer entitled to small entity status. Accordingly, all future fees paid in this application must be paid at the large entity rate.

There is no indication that the person signing the petition was ever given a power of attorney to prosecute the application. If the person signing the petition desires to receive future correspondence regarding this application, the appropriate power of attorney documents must be submitted. While a courtesy copy of this decision is being mailed to the person signing the petition, all future correspondence will be directed to the address currently of record until appropriate instructions are received.

Inquiries related to this communication should be directed to the Michelle R. Eason at (571) 272-4231.

Thurman Page
Petitions Examiner
Office of Petitions

cc: **KENDAL M. SHEETS**
CPA NORTH AMERICA, LLC
225 REINEKERS LANE, SUITE 400
ALEXANDRIA, VA 22314

19 SEP 2000

Patent and Trademark Office

Patent Cooperation Treaty Legal Office

Address: Assistant Commissioner for Patents
Box PCT
Washington, D.C. 20231

RECEIVED
SEP 25 2000
McDERMOTT WILL & EMERY

Robert L. Price
McDERMOTT, WILL & EMERY
600 13th Street, N.W.
Washington, D.C. 20005-3096

OIPE JC68
NOV 20 2000
PATENT & TRADEMARK OFFICE

In re Application of
BENTLEY, John David *et al*
Application No.: 09/555,275
PCT No.: PCT/AU98/00998
Int. Filing Date: 27 November 1998
Priority Date: 27 November 1997
Attorney Docket No.: 50179-081
For: METHOD OF DESIGNING AGONISTS AND ANTAGONISTS TO IGF RECEPTOR

DECISION ON PAPERS SUBMITTED UNDER 37 CFR 1.42

This communication is in response to the documents filed 19 July 2000 in response to the Notification of Missing Requirements mailed 19 June 2000. This is treated as a petition under 37 CFR 1.42.

BACKGROUND

On 19 June 2000, a Notification of Missing Requirements was mailed indicating that a declaration in compliance with 37 CFR 1.497 was required. A one month time limit was set for response.

On 19 July 2000, applicants submitted the instant response which was accompanied by, *inter alia*, a declaration executed by nine of the ten co-inventors and Paul Alexander Tulloch as the legal representative of the estate of deceased inventor, Peter Archibald Tulloch.

DISCUSSION

37 CFR 1.42 *When the Inventor is Dead*, states, in part:

In case of the death of the inventor, the legal representative (executor, administrator, etc.) of the deceased inventor may make the necessary oath or declaration, and apply for and obtain the patent.

In the instant petition, applicants have furnished a declaration signed by Paul Alexander Tulloch as the legal representative of the estate of the deceased inventor, Peter Archibald Tulloch which corresponds to information received from the International Bureau.

However, the declaration does not properly identify the above-captioned application and is therefore, not in compliance with 37 CFR 1.497. The declaration submitted 19 July 2000 does not identify the present U.S. application number or PCT international application number and lists the title of the above-identified application as "Method of Screening," while the title of the above-captioned application in the originally filed national stage papers and the international publication bears the title "Method of Designing Agonists and Antagonists to IGF Receptor." Moreover, the attorney docket number listed on all other papers submitted in the above-captioned application is "50179-081," while the declaration submitted 19 July 2000 originally lists the attorney docket number as"50179-050," but has been altered to "50179-081" without initializing and dating the alteration.

CONCLUSION

For the above listed reasons, applicants' petition under 37 CFR 1.42 is **DISMISSED** without prejudice.

Applicants are required to provide an acceptable oath or declaration in compliance with 37 CFR 1.497 within **ONE (1) MONTH** from the mail date of this decision or any extension of time remaining from the Notification of Missing Requirements mailed 10 June 2000, whichever is longer. Failure to properly respond will result in abandonment of the application.

Any further correspondence with respect to this matter should be addressed to the Assistant Commissioner for Patents, Box PCT, Washington, D.C. 20231, with the contents of the letter marked to the attention of the PCT Legal Office.

Boris Milef
PCT Legal Examiner
PCT Legal Office

James Thomson
PCT Legal Attorney
PCT Legal Office

Tel.: (703) 308-6457

MAY 3 0 2001

#7

UNITED STATES PATENT AND TRADEMARK OFFICE

Commissioner for Patents
United States Patent and Trademark Office
Washington, D.C. 20231
www.uspto.gov

Robert L. Price
McDERMOTT, WILL & EMERY
600 13th Street, N.W.
Washington, D.C. 20005-3096

In re Application of BENTLEY, John David *et al* Application No.: 09/555,275 PCT No.: PCT/AU98/00998 Int. Filing Date: 27 November 1998 Priority Date: 27 November 1997 Attorney Docket No.: 50179-081 For: METHOD OF DESIGNING AGONISTS AND ANTAGONISTS TO IGF RECEPTOR	DECISION ON PAPERS RESUBMITTED UNDER 37 CFR 1.42

This decision is in response to applicants' "Response to Decision on Papers Submitted Under 37 CFR 1.42" filed 20 November 2000.

BACKGROUND

On 19 September 2000, a decision dismissing applicants' petition under 37 CFR 1.42 was mailed because the declaration submitted did not properly identify the above-captioned application. Specifically, the declaration originally listed the attorney docket number as"50179-050," but had been altered to "50179-081" and also the title of the application was noted as "Method of Screening" on the declaration while the title of the above-captioned application is "Method of Designing Agonists and Antagonists to IGF Receptor."

On 10 October 2000, applicants filed the instant response which was accompanied by, *inter alia*, an executed declaration and a four-month extension of time request with a fee of $1,390.00.

DISCUSSION

Here, applicants have furnished a declaration signed by Paul Alexander Tulloch as the "Legal Representative." Applicants have provided the name, citizenship, residence, and post office address of the legal representative. However, applicants have not provided any information on the deceased inventor, Peter Archibald Tulloch, such as his mailing address prior to his death, his residence, and his citizenship. This information is required pursuant to 37 CFR 1.497(a) & (b).

Hence, the declaration again does not comply with 37 CFR 1.497 in that it does

not list all of the original inventors.

CONCLUSION

For the reasons listed above, applicants' renewed petition under 37 CFR 1.42 is **DISMISSED** without prejudice.

Applicants are required to provide an acceptable oath or declaration in compliance with 37 CFR 1.497(a) and (b) within a time limit of **TWO (2) MONTHS** from the mail date of this decision. Failure to comply will result in the abandonment of this application.

Please direct further correspondence with respect to this matter to the Assistant Commissioner for Patents, Box PCT, Washington, D.C. 20231, and address the contents of the letter to the attention of the PCT Legal Office.

Leonard Smith
PCT Legal Examiner
PCT Legal Office

James Thomson
Attorney Advisor
PCT Legal Office

Tel.: (703) 308-6457

NOV 2 7 2001

#11

UNITED STATES PATENT AND TRADEMARK OFFICE

Commissioner for Patents
United States Patent and Trademark Office
Washington, D.C. 20231
www.uspto.gov

Robert L. Price
McDERMOTT, WILL & EMERY
600 13th Street, N.W.
Washington, D.C. 20005-3096

In re Application of BENTLEY, John David *et al* Application No.: 09/555,275 PCT No.: PCT/AU98/00998 Int. Filing Date: 27 November 1998 Priority Date: 27 November 1997 Attorney Docket No.: 50179-081 For: METHOD OF DESIGNING AGONISTS AND ANTAGONISTS TO IGF RECEPTOR	DECISION ON PAPERS RESUBMITTED UNDER 37 CFR 1.42

This decision is in response to applicants' "Renewed Petition Under 37 CFR 1.42" filed 30 August 2001.

BACKGROUND

On 30 May 2001, a decision dismissing applicants' petition under 37 CFR 1.42 was mailed because the declaration did not contain information on the deceased inventor, Peter Tulloch.

On 30 August 2001, applicants filed the instant response which was accompanied by, *inter alia*, an executed declaration and a one-month extension of time request with a fee of $110.00.

DISCUSSION

In the decision dated 30 May 2001, the declaration submitted 20 November 2000 listed the name, citizenship, residence, and post office address of the legal representative, Paul Tulloch. However, applicants did not provide any information on the deceased inventor in the declaration. Therefore, the declaration failed to comply with 37 CFR 1.497.

In the renewed petition, applicants have furnished a declaration signed by Paul Tulloch as legal representative of Peter Tulloch. The citizenship, residence and post

office address of the deceased co-inventor are listed on this declaration. However, the citizenship, residence, and post office address of the legal representative is not listed as required by 37 CFR 1.497(b)(2).

Nevertheless, the declaration filed 20 November 2000 will be combined with the declaration filed 30 August 2001 to comply with the requirements of 37 CFR 1.497.

CONCLUSION

The papers filed under 37 CFR 1.42 are **ACCEPTED**.

Applicants have completed the requirements for acceptance under 35 U.S.C. 371(c). The application has an international filing date of 27 November 1998, under 35 U.S.C. 363, and a 35 U.S.C. 371(c) date of 30 August 2001.

This application is being forwarded to the United States Designated/Elected Office for further processing in accordance with this decision.

Richard Cole
PCT Legal Examiner
PCT Legal Office

James Thomson
Attorney Advisor
PCT Legal Office

Tel.: (703) 308-6457

19 SEP 2000

UNITED STATES DEPARTMENT OF COMMERCE
Patent and Trademark Office

Patent Cooperation Treaty Legal Office

Address: Assistant Commissioner for Patents
Box PCT
Washington, D.C. 20231

#5

Robert L. Price
McDERMOTT, WILL & EMERY
600 13th Street, N.W.
Washington, D.C. 20005-3096

In re Application of	:	
BENTLEY, John David *et al*	:	
Application No.: 09/555,275	:	
PCT No.: PCT/AU98/00998	:	DECISION
Int. Filing Date: 27 November 1998	:	ON PAPERS
Priority Date: 27 November 1997	:	SUBMITTED
Attorney Docket No.: 50179-081	:	UNDER
For: METHOD OF DESIGNING AGONISTS	:	37 CFR 1.42
AND ANTAGONISTS TO IGF	:	
RECEPTOR	:	

This communication is in response to the documents filed 19 July 2000 in response to the Notification of Missing Requirements mailed 19 June 2000. This is treated as a petition under 37 CFR 1.42.

BACKGROUND

On 19 June 2000, a Notification of Missing Requirements was mailed indicating that a declaration in compliance with 37 CFR 1.497 was required. A one month time limit was set for response.

On 19 July 2000, applicants submitted the instant response which was accompanied by, *inter alia*, a declaration executed by nine of the ten co-inventors and Paul Alexander Tulloch as the legal representative of the estate of deceased inventor, Peter Archibald Tulloch.

DISCUSSION

37 CFR 1.42 *When the Inventor is Dead*, states, in part:

In case of the death of the inventor, the legal representative (executor, administrator, etc.) of the deceased inventor may make the necessary oath or declaration, and apply for and obtain the patent.

In the instant petition, applicants have furnished a declaration signed by Paul Alexander Tulloch as the legal representative of the estate of the deceased inventor, Peter Archibald Tulloch which corresponds to information received from the International Bureau.

However, the declaration does not properly identify the above-captioned application and is therefore, not in compliance with 37 CFR 1.497. The declaration submitted 19 July 2000 does not identify the present U.S. application number or PCT international application number and lists the title of the above-identified application as "Method of Screening," while the title of the above-captioned application in the originally filed national stage papers and the international publication bears the title "Method of Designing Agonists and Antagonists to IGF Receptor." Moreover, the attorney docket number listed on all other papers submitted in the above-captioned application is "50179-081," while the declaration submitted 19 July 2000 originally lists the attorney docket number as"50179-050," but has been altered to "50179-081" without initializing and dating the alteration.

CONCLUSION

For the above listed reasons, applicants' petition under 37 CFR 1.42 is **DISMISSED** without prejudice.

Applicants are required to provide an acceptable oath or declaration in compliance with 37 CFR 1.497 within **ONE (1) MONTH** from the mail date of this decision or any extension of time remaining from the Notification of Missing Requirements mailed 10 June 2000, whichever is longer. Failure to properly respond will result in abandonment of the application.

Any further correspondence with respect to this matter should be addressed to the Assistant Commissioner for Patents, Box PCT, Washington, D.C. 20231, with the contents of the letter marked to the attention of the PCT Legal Office.

Boris Milef
PCT Legal Examiner
PCT Legal Office

James Thomson
PCT Legal Attorney
PCT Legal Office

Tel.: (703) 308-6457

UNITED STATES PATENT AND TRADEMARK OFFICE

COMMISSIONER FOR PATENT
UNITED STATES PATENT AND TRADEMARK OFFIC
P.O. BOX 1450
ALEXANDRIA, VA 22313-1450
www.uspto.go

MAIL

Paper No. 11

DEC 0 2 2003

DIRECTOR OFFICE
TECHNOLOGY CENTER 2600

JOSEPH S TRIPOLI
THOMSON MULTIMEDIA LICENSING INC
P O BOX 5312
PRINCETON NJ 08540

In re Application of
Haoping YU, et al.
Application No. 09/555,488
Filed: May 31, 2000
For: LOW NOISE ENCODING AND DECODING METHOD

DECISION ON PETITION TO WITHDRAW HOLDING OF ABANDONMENT

This is a decision on the Petition for Withdrawal of Abandonment, filed October 6, 2003.

This application was held abandoned for failure to timely and effectively respond to the final Office action mailed January 13, 2003. A Notice of Abandonment was mailed September 24, 2003. Petitioner alleges that the Office action was not received.

The showing required to establish the failure to receive an Office communication must include a statement from the practitioner stating that the Office communication was not received by the Practitioner and attesting to the fact that a search of the file jacket and docket records indicates that the Office communication was not received. A copy of the docket record where the non-received Office communication would have been entered had it been received and docketed must be attached to and referenced in practitioner's statement. See "Withdrawing the Holding of Abandonment When Office Actions Are Not Received", 1156 Official Gazette 53 (November 16, 1993) and M.P.E.P. § 711.03(c), section II. The showing outlined above may not be sufficient if there are circumstances that point to a conclusion that the Office communication may have been lost after receipt rather than a conclusion that the Office communication was lost in the mail.

In support of the instant petition, petitioner has submitted a statement stating that the Notice of Allowance was not received by the practitioner and a statement that he searched the file jacket and the docket records of the application and found no evidence that the Office action was received.

The petition is **GRANTED.**

Accordingly, the Notice of Abandonment is vacated and the holding of abandonment is withdrawn.

The application file will be forwarded to the Technology Center's technical support staff for re-mailing the final Office action originally mailed on January 13, 2003. The time period for response will begin as of the mailing date thereof.

Allen MacDonald

Allen MacDonald, Director
Technology Center 2600
Communications

AUG 27 2001

UNITED STATES PATENT AND TRADEMARK OFFICE

#6

COMMISSIONER FOR PATENTS
UNITED STATES PATENT AND TRADEMARK OFFICE
WASHINGTON, D.C. 20231
www.uspto.gov

Birch, Stewart, Kolasch & Birch
8110 Gatehouse Road
Suite 500 East
Falls Church, VA 22042

In re Application of
YAMAZAKI et al.
Application No.: 09/555,629
PCT No.: PCT/JP98/05470
Int. Filing Date: 03 December 1998
Priority Date: 03 December 1997
Attorney Docket No.: 2520-0118P
For: PREPARATION FOR CONTINUOUS INRAVENOUS ADMINISTRATION

DECISION

This decision is in response to applicants "Petition Under 37 C.F.R. §1.182" filed 22 January 2001. The petition fee of $130.00 has been paid.

BACKGROUND

On 03 December 1998, applicants filed international application PCT/JP98/05470, which claimed a priority date of 03 December 1997. A copy of the international application was communicated to the United States Patent and Trademark Office (USPTO) from the International Bureau on 10 June 1999. A Demand for international preliminary examination, in which the United States was elected, was filed on 02 July 1999 prior to the expiration of nineteen months from the priority date. Accordingly, the thirty-month period for paying the basic national fee in the United States expired at midnight on 05 June 2000 (03 June 2000 being a Saturday).

On 02 June 2000, applicants filed in the USPTO a Transmittal Letter (Form PTO-1390) for entry into the national stage under 35 U.S.C. 371 accompanied by, *inter alia*, the Basic National Fee and the surcharge under 37 CFR 1.492(e) for providing the oath or declaration later than 30 months from the priority date.

On 30 June 2000, the USPTO mailed a NOTIFICATION OF MISSING REQUIREMENTS UNDER 35 U.S.C. 371 (Form PCT/DO/EO/905) indicating, *inter alia*, that an oath or declaration in compliance with 37 CFR 1.497(a)-(b) was required.

On 31 July 2000, applicants submitted a "LETTER SUBMITTING ADDITIONAL DOCUMENTS FOR ENTERING NATIONAL PHASE FOR A PCT APPLICATION" including, *inter alia*, an executed declaration.

On 22 December 2000, the USPTO mailed a NOTIFICATION OF A DEFECTIVE RESPONSE (Form PCT/DO/EO/916) indicating that the declaration submitted 30 July 2000 was not in compliance with 37 CFR 1.497(a)-(b) because the declaration was not properly executed and did not properly identify the inventor Ikue Mori (the declaration identified and was signed by Ikue KUDO while the published international application lists Ikue MORI as the inventor).

On 22 January 2001, applicants submitted the instant "Petition Under 37 C.F.R. §1.182" which was accompanied by an affidavit of Ikue KUDO.

DISCUSSION

MPEP 605.04(c), states in part:

> In cases where an inventor's name has been changed after the application has been filed and the inventor desires to change his or her name on the application, he or she must submit a petition under 37 CFR 1.182. . . . The petition must include an appropriate petition fee and an affidavit signed with both names and setting forth the procedure whereby the change of name was effected, or a certified copy of the court order.

Here, an inventor's name was changed from Ikue MORI to Ikue KUDO after the application was filed. A petition under 37 CFR 1.182 and an affidavit signed with both names and setting forth the procedure whereby the change of name was effected has been submitted. The affidavit by Ikue KUDO submitted 22 January 2001 is accepted. The declaration executed by, *inter alia*, Ikue KUDO on 31 July 2000 is also accepted.

CONCLUSION

For the reasons above, the renewed petition under 37 CFR 1.182 is **GRANTED**.

Please direct further correspondence with respect to this matter to the Assistant Commissioner for Patents, Box PCT, Washington, DC 20231, and address the contents of the letter to the attention of the Office of PCT Legal Administration.

This application is being forwarded to the National Stage Processing Branch of the Office of PCT Operations to continue national stage processing of the application including according the application a 35 U.S.C. 371(c) date of **31 July 2001**.

Daniel Stemmer
Legal Examiner
PCT Legal Affairs
Office of Patent Cooperation Treaty

Legal Administration
Telephone: (703) 308-2066
Facsimile: (703) 308-6459

UNITED STATES PATENT AND TRADEMARK OFFICE

Commissioner for Patents
United States Patent and Trademark Office
P.O. Box 1450
Alexandria, VA 22313-1450
www.uspto.gov

JUL 22 2004

SUZANNE E. ZISKA
MORGAN LEWIS & BOCKIUS LLP
1111 PENNSYLVANIA AVENUE NW
WASHINGTON DC 20004

In re Application of	
Nguyen et al	:
Serial No : 09/555,640	:Petition To Review Restriction
Filed : 10 August 2000	:Under 37 C.F.R. 1.144
Attorney Docket No.: 045636-5033-US	:

This is in response to applicants petition under 37 CFR 1.144, filed May 2, 2003, requesting review of the Examiner's restriction requirement mailed 02/01/2003. The delay in acting on this petition is regretted.

BACKGROUND

This application is a national stage filing of PCT/FR98/02615, filed 3 December 1998. The Examiner instituted a restriction of claims 1-14, 16-21, 24-37 into 8 different Groups in an office action mailed 12 June 2002 which was subsequently made final. The Groups are set forth below:

Group I, claims 1-6 and 10, drawn to nucleic acids, fragments and primer pairs.

Group II, claims 7-9, drawn to variant erythrovirus or plasmids encoding said variants.

Group III, claims 11-14, 16, 24-27 drawn to diagnostic methods employing various nucleotide sequences.

Group IV, claims 17-20, 28, 29 drawn to proteins or polypeptide fragments and immunogenic compositions containing such

Group V, claims 21, 30, 31 drawn to antibody directed against an erythrovirus variant protein or polypeptide fragment thereof.

Group VI, claims 32 and 33, drawn to in vitro screening methodologies employing erythrovirus peptides.

Group VII, claims 34 and 35 drawn to in vitro screening methodologies employing erythrovirus-specific antibodies

Group VIII claims 36 and 37 drawn to diagnostic kit comprising various reagents.

Applicants were then required to elect a single product for examination.
Applicants elected Group I and SEQ ID No. 1 with traverse.

On 25 February 2003, the Examiner considered the traversal and found it to be not persuasive. The restriction requirement was made final. Claims 3-14, 16-21 and 24-37 were withdrawn from consideration pursuant to 37 CFR 1.142(b). Claims 1 and 2 were rejected under 35 USC 112, second paragraph for referring to non-elected claims. The erythrovirus genome segment corresponding to SEQ ID No 1 was indicated as being free of the prior art of record.

RELEVANT AUTHORITY

An international or a national stage application are considered to have unity of invention where there exists a "special technical feature" that defines a contribution which each of the claimed inventions, considered as a whole, makes over the prior art. See PCT Rule 13.2; 37 CFR 1.475(a), (b)(1) and (2).

PCT 13.2 Circumstances in Which the Requirement of Unity of Invention Is to Be Considered Fulfilled

> *Where a group of inventions is claimed in one and the same international application, the requirement of unity of invention referred to in Rule 13.1 shall be fulfilled only when there is a technical relationship among those inventions involving one or more of the same or corresponding special technical features. The expression "special technical features" shall mean those technical features that define a contribution which each of the claimed inventions, considered as a whole, makes over the prior art.*

See MPEP 1893.03(d) and Annex B, Part 2 of the PCT Administration Instructions

MPEP 1850 states *Unity of invention has to be considered in the first place only in relation to the independent claims in an international application and not the dependent claims and*

> *(i) If the independent claims avoid the prior art and satisfy the requirement of unity of invention, no problem of lack of unity arises in respect of any claims that depend on the independent claims;*
> *(ii) If however, an independent claim does not avoid the prior art, then the question whether there is still an inventive link between all the claims dependent on the claim need to be carefully considered. If there is no link remaining an objection of lack of unity a posteriori (that is, arising only after assessment of the prior art) may be raised.*

See ANNEX B: Unity of Invention Part 1 "Instructions Concerning Unity of Invention" MPEP AI-6 (Rev. 1. Feb. 2003).

Regarding the determination of a "special technical feature" under Rule 13.2 when dealing with "Markush Practice", MPEP: Annex B "Unity of Invention Part 1 Instructions Concerning Unity of Invention" and "Part 2 Examples Concerning Unity of Invention" is instructive.

In accordance with Annex B (f) "Markush Practice", the requirement of a technical interrelationship and the same or corresponding special technical feature as defined in Rule 13.2, shall be considered to be met when the alternatives are of a "similar nature" which occurs when the following criteria are fulfilled:

(A) all alternatives have a common property or activity, and

(B)(1) a common structure is present, i.e. a significant structural element is shared by all of the alternatives, or

(B)(2) in cases where the common structure cannot be the unifying criteria, all alternatives belong to a "recognized class of chemical compounds" in the art to which the invention pertains.

MPEP 809.03 defines linking claims as follows:
There are a number of situations which arise in which an application has claims to two or more properly divisible inventions, so that a requirement to restrict the application to one would be proper, but presented in the same case are one or more claims (generally called "linking" claims) inseparable therefrom and thus linking together the inventions otherwise divisible.

37 CFR 1.475(b)-(d) provides guidance for treatment of second and subsequent products and methods.

(b) An international or a national stage application containing claims to different categories of invention will be considered to have unity of invention if the claims are drawn only to one of the following combinations of categories:
(1) A product and a process specially adapted for the manufacture of said product; or
(2) A product and process of use of said product; or
(3) A product, a process specially adapted for the manufacture of the said product, and a use of the said product; or
(4) A process and an apparatus or means specifically designed for carrying out the said process; or
(5) A product, a process specially adapted for the manufacture of the said product, and an apparatus or means specifically designed for carrying out the said process.
(c) If an application contains claims to more or less than one of the combinations of

categories of invention set forth in paragraph (b) of this section, unity of invention might not be present.
(d) If multiple products, processes of manufacture or uses are claimed, the first invention of the category first mentioned in the claims of the application and the first recited invention of each of the other categories related thereto will be considered as the main invention in the claims, see PCT Article 17(3)(a) and § 1.476(c).

37 CFR 1.475(e) states:
(e) The determination whether a group of inventions is so linked as to form a single general inventive concept shall be made without regard to whether the inventions are claimed in separate claims or as alternatives within a single claim.

DISCUSSION

The application, file history and petition have been considered carefully.

Relevant claims are summarized below.

Claim 1. An isolated nucleic acid comprising nucleic acids selected from the groups consisting of:

the sequence is SEQ ID No 1,

the genomic sequences of variant erythroviruses called erythrovirus type V9, which molecularly cannot be recognized as an erythrovirus B19 because it exhibits greater than or equals to 10% over the whole genome with respect to the erythrovirus B19 sequences and which exhibits a genetic divergence of less than or equal to 6% with respect to SEQ ID No 1, and

the erythrovirus genomic sequences capable of hybridizing under stringent conditions with one of the following sequences: sequences SEQ ID Nos. 45-80, 81, 83, 85, 87, 89, 91, 93, 108, 110, 117, 118, 119 and 120.

Claim 2. The nucleic acid of Claim 1 wherein the nucleic acid exhibits a restriction profile according to Figures 7.1 to 7.3.

Claim 3. Fragments of the nucleic acids according to Claim 1, which are capable of allowing detection of an erythrovirus V9, characterized in that they are selected from the Group consisting of:
a) the sequences SEQ ID Nos 81, 83, 85, 87, 89, 91 or 93
b) the sequences SEQ ID Nos 2-80
c) the sequences SEQ ID Nos 105-121 and

d) the sequences complementary to the preceding sequences, wherein the fragments comprise at least 17 nucleotides derived from the preceding sequences or their complementary sequences.

Claim 4. A fragment according to Claim 3, selected from the groups consisting of SEQ ID Nos :45-80, 108 and 110, their complementary sequences, the sequences of at least 17 nucleotides derived from these sequences and the sequences comprising the said sequences and wherein the selected sequence is capable of serving as a probe in the specific identification of an erythrovirus V9 or related erythrovirus.

Claim 5. A fragment according to Claim 3, selected from the group consisting of the sequences SEQ ID Nos 2-80 and the sequences SEQ ID No 105-121, their complementary sequences, the sequences of at least 17 nucleotides derived from these sequences and the sequences comprising the said sequences and wherein the selected sequence is capable of serving as a primer for the amplification of sequences derived from an erythrovirus.

Claims 7 and 8 are directed to a virus or plasmid that comprises the viral genome of a variant erythrovirus called V9, described generally in terms of Claim 1, second clause.

Claim 9 is reproduced below:

9. A plasmid, according to Claim 8, characterized in that it includes the sequence of SEQ ID No. 1.

It is noted that the elected invention, nucleic acid comprising SEQ ID No. 1, and nucleic acid as recited in Claim 9 are one and the same. As such, the examiner erred in withdrawing Claim 9 from examination. Moreover, because Claim 9 is properly dependent upon claim 8 and because claim 8 is of comparable, overlapping scope with claim 7, these claims should also have been examined along with the elected invention, molecules comprising SEQ ID No. 1 or variants of SEQ ID No. 1. Finally, because sequences comprising SEQ ID No. 1 are free of the prior art, as stated in the Office action, Claim 9 should have been rejoined as it would also share the special technical feature and make a contribution over the prior art. In view of this error, both the lack of unity determination and the Office action have been vacated.

Before turning to the merits of the petition, a number of problems listed below in the claims complicate interpretation what applicants intend to claim.

(1) Claim 1 recites nucleic acid comprising nucleic acids and lists a Markush group. It is not clear whether applicant intended to make the second phrase "nucleic acids" plural, thus requiring two of the molecules, for example SEQ ID No 1 and SEQ ID No 45, together. Alternatively, if the second phrase "nucleic acids" contains a

typographical error, the scope of Claim 1 only requires one of the particular sequences recited.

(2) Similarly, Claim 3 recites "Fragments of nucleic acids according to Claim 1..." Again, it is not clear whether applicants intend to claim sets of molecules or whether the term fragments contains a typographical error and should be in the singular, not plural form. A review of dependent Claims 4 and 5 does not resolve this uncertainty.

(3) Claims 4 and 5 recite "Fragment according to claim 3..." One fragment is broader that sets of fragments. It is not clear whether Claims 4 and 5 are improper dependent claims which do not further limit the scope of the claims 1 and 3 or whether Claims 4 and 5 contain a typographical error and should recite "fragment" in the plural, not singular form.

(4) Claim 4 is directed to sequences comprising said sequences of claim 3. In this respect, claim 4 appears to be an improperly dependent claim in that it is broader in scope then fragments of claims 3 or 1. Similarly claims 4 and 5 recite sequences "derived from" those in claims 1 and 3. These sequences also appear to be broader in scope then the ones in the preceding claims. Applicants are reminded that dependent claims must be narrower than the claim(s) from which they depend.

(5) Claims 4 and 5 also recite sequences derived from said sequence and sequences comprising the said sequences. This appears to read upon sequences which share only a small amount of sequence homology with any of the recited fragments and may contain a large amount of unrelated sequence.

(6) The functional limitations recited in Claims 4 and 5 do not further limit the scope of the claim to sequences specific for V9, because they encompass probes for any related erythorovirus or primers for sequences derived from any erythrovirus.

(7) Claim 18 recites a protein which is not characterized by structure or function. The protein is characterized in the manner in which it is made. It is not clear whether any of the nucleotide sequences of Claim 1 are meant to function as the template from which the protein is expressed or whether they function to enhance transcription or translation of other, unrecited sequences. For this reason it is difficult to place Claim 18 in any Group.

In view of items (1) through (7) above, it is not clear whether the claims read upon sequences in the alternative or in combination. Neither the lack of unity determination nor Office action addressed these problems or presented applicants with the opportunity to elect an invention directed to sets or combinations of sequences if that were the invention intended. Similarly, the lack of unity determination did not identify or address the possible combinations and sets of fragments which may be encompassed by the claims.

For example, the compositions of Claims 20, 28 and 29 are directed to one or more of the proteins. These claims encompass both individual molecules and sets of molecules.

Additionally, the kits of claim 36 encompass at least one probe and/or a pair of primers and/or a protein and/or an antibody. As such, this claim reads upon and should be examined with any elected product group.

Claim 6 clearly sets forth pairs of primers. As such, this claim would be included in the examination to the extent it reads upon a primer pair which required the elected invention.

In view of these problems with the claims, Applicants should carefully review the claims to ensure that they are claiming what they intend to claim.

Turning now to the petition, it states that all of the sequences set forth in Claim 1 are properly examined as a whole because SEQ ID No. 1 is nearly full length genomic clone of erythovirus V9 and has been indicated as free of the prior art by the examiner.

This is not persuasive, because the molecules encompassed by claim 1 are not commensurate in scope with the features argued. The molecules encompassed by the third clause of claim 1 are short primer sequences which are clearly not full length genomic clones of erythovirus V9. A review of the sequence listing shows that SEQ ID No. 1 is 5028 nucleotides in length. In contrast, SEQ ID No. 45 is 120 nucleotides in length. Moreover, SEQ ID No. 46 is 30 nucleotides in length. The structure shared by these sequences, 30 residues of SEQ ID NO 46, is not a significant structural element of SEQ ID No. 1, which is 5028 in length.

Applicants have argued that the sequence search of the various fragments of SEQ ID No. 1 would overlap. This argument is not persuasive. An overlapping search is not the same as a co-extensive search. Moreover, search burden is not a criteria for determining unity of invention.

Applicants then argue that Groups are linked by the special technical feature of Group I because they all share the common technical feature of sequence of Group I. This is not persuasive because (1) the fragments of SEQ ID No 1 do not require the entire length of SEQ ID No. 1, (2) the fragments do not require any particular structural portion of SEQ ID No. 1 and (3) the fragments do not require any particular function, property or activity which is shared with SEQ ID No. 1.

Applicants argue that SEQ ID No. 1 links all the sequences claimed. This is not correct. While the fragments may have been derived from or complementary to or hybridize to SEQ ID No. 1, the fragments are not linked, per se, by SEQ ID No. 1. Moreover, it is noted that while broad claim may link narrower claims, narrow claims cannot link broad claims. SEQ ID No. 1 cannot link fragments of SEQ ID No. 1. The broadest claimed embodiment appears to be one of:

"sequences capable of hybridizing under stringent conditions with" (claim 1, third clause)
"sequences complementary to the preceding sequences, wherein the fragments comprise at least 17 nucleotides derived from the preceding sequences" of claim 3 or
"sequences of at least 17 nucleotides derived from these sequences and the sequences comprising said sequences" of claim 4.

This appears to be the concept which links the other polynucleotide product inventions. Although applicants have mis-identified the linking concept, they are correct that one exists which was not properly addressed by the Examiner

All of the polynucleotide sequences appear to be linked by one or more of the following concepts:

"sequences capable of hybridizing under stringent conditions with" (claim 1, third clause)
"sequences complementary to the preceding sequences, wherein the fragments comprise at least 17 nucleotides derived from the preceding sequences (Claim 3)
"sequences of at least 17 nucleotides derived from other sequences" and "sequences comprising said sequences." (Claim 4).

Therefore, Claims 1, 3 and 4, in part, appear to link(s) inventions directed to the various polynucleotide sequences. The restriction requirement among the linked inventions would be subject to the nonallowance of the linking claim(s), claims which contain these limitations. Upon the allowance of the linking claim(s), the restriction requirement as to the linked inventions shall be withdrawn and any claim(s) depending from or otherwise including all the limitations of the allowable linking claim(s) will be entitled to examination in the instant application. Applicant(s) are advised that if any such claim(s) depending from or including all the limitations of the allowable linking claim(s) is/are presented in a continuation or divisional application, the claims of the continuation or divisional application may be subject to provisional statutory and/or nonstatutory double patenting rejections over the claims of the instant application. Where a restriction requirement is withdrawn, the provisions of 35 U.S.C. 121 are no longer applicable. In re Ziegler, 44 F.2d 1211, 1215, 170 USPQ 129, 131-32 (CCPA 1971). See also MPEP § 804.01.

Additionally, overlapping subject matter is found between the various polynucleotides, as follows. Claim 4 recites "sequences comprising said sequences." The term "comprising" is considered to be open claim language and allows for the addition of other sequences to the end of the particular sequence.

In this case, a restriction to a single sequence, for example a fragment, may result in a group which overlaps in scope with a group drawn to a larger molecule which

comprises that fragment. If a large molecule is elected and found free of the prior art, it does not then follow that the fragments of that molecule are free of the prior art.

However, if applicants elect a fragment of a full-length molecule and that fragment was not found in the prior art, either alone or as a part of a larger prior art molecule, then any disclosed molecule which contains at least the entire examined fragment would be rejoined as no further search would be required. If however, the smaller fragment were found in the prior art, either alone or as part of a larger molecule, then no rejoinder would be contemplated because the shared common feature would not be considered a special technical feature under PCT Rule 13.2.

By way of example, it appears that SEQ ID No 85 is contained within and therefore linked to SEQ ID No 1. If SEQ ID No 85 were elected and found to be free of the prior art, then the restriction requirement between SEQ ID No 85 and SEQ ID No 1 would be withdrawn.

In another example, SEQ ID No 26 (55-mer) appears to be contained within and linked to SEQ ID NO 83 (222-mer) which appears to be contained within and linked to SEQ ID No 81 (2013-mer) which appears to be contained within and linked to SEQ ID No 1. If SEQ ID No 26 is elected and found to be free of the prior art, then the restriction requirement between SEQ ID Nos. 26, 83, 81 and 1 would be withdrawn.

The lack of unity determination failed to inform applicants of the possibility for rejoinder of larger molecules that contain the elected sequence, should that sequence make a contribution over the prior art. Should another lack of unity determination be prepared, Applicants should be informed of the possibility of this type of rejoinder and of the reasons for carefully considering the size of the sequence applicants wish to elect. Applicants should note that the rejoinder will apply only to sequences that are not previously allowed or patented. Thus, if Claims directed at SEQ ID No 85 was found free of the prior art and rejoined and issued with SEQ ID No 1, claims encompassing SEQ ID No 1, for example, sequences comprising SEQ ID No 83, would not be allowed without a terminal disclaimer. The Office will not issue claims to the same sequence in more than one patent.

This application contains claims to a product and a method of using the product. Should the product be elected and found to make a contribution over the prior art, and should the method claims be limited in scope to that product, the first method of using the product would be rejoined, in view of the shared special technical feature.

If multiple methods of using the elected product are claimed, applicants should be informed of rejoinder practice for the second and subsequent methods of using the product. See MPEP 821.04.

DECISION

Applicant's petition to withdraw the restriction requirement under 37 CFR 1.144 is **GRANTED** to the extent that the lack of unity determination mailed 12 June 2002 and the office action mailed 25 February 2003 have been vacated.

The application will be forwarded to the Examiner for consideration of the response and amendment filed 25 August 2003 and for preparation a new Office action consistent with this petition decision.

Should there be any questions regarding this decision, please contact Special Program Examiner Julie Burke, Special Program Examiner, by mail addressed to Director, Technology Center 1600, PO BOX 1450, ALEXANDRIA, VA 22313-1450, or by telephone at (571) 272-1600.

Jasemine C. Chambers

Jasemine Chambers
Director, Technology Center 1600

0 5 MAR 2003
UNITED STATES PATENT AND TRADEMARK OFFICE

COMMISSIONER FOR PATENTS
UNITED STATES PATENT AND TRADEMARK OFFICE
WASHINGTON, D.C. 20231
www.uspto.gov

Richard D. Conard
Barnes & Thornburg
11 South Meridian Street
Indianapolis, IN 46204

In re Application of BATMAN et al	:	
U.S. Application No.: 09/555,718	:	
Int. Application No.: PCT/US98/25850	:	DECISION
Int. Filing Date: 04 December 1998	:	
Priority Date: 04 December 1997	:	
Attorney Docket No.: 5727-65998	:	
For: INSTRUMENT SETUP UTILITY PROGRAM	:	

This is in response to applicant's "Petition Under 37 C.F.R. § 1.182" filed 05 September 2001.

BACKGROUND

On 04 December 1998, applicant filed international application PCT/US98/25850, which claimed priority of an earlier United States application filed 04 December 1997. A Demand for international preliminary examination, in which the United States was elected, was filed on 09 June 1999, prior to the expiration of nineteen months from the priority date. Accordingly, the thirty-month period for paying the basic national fee in the United States expired at midnight on 05 June 2000 (04 June 2000 was a Sunday).

On 02 June 2000, applicant filed national stage papers in the United States. The submission was accompanied by, *inter alia*, the basic national fee required by 35 U.S.C. 371(c)(1).

On 30 June 2000, the United States Designated/Elected Office (DO/EO/US) mailed a Notification of Missing Requirements Under 35 U.S.C. 371 (Form PCT/DO/EO/905), indicating that an oath or declaration in compliance with 37 CFR 1.497 must be filed.

On 28 November 2000, applicant filed executed declarations signed by eleven of the twelve joint inventors and not signed by inventor Tracy Tetzlaff.

On 14 December 2000, the DO/EO/US mailed a Notification of a Defective Response (Form PCT/DO/EO/916) along with a Notification of a Defective Oath or Declaration (Form PCT/DO/EO/917) indicating that the declarations filed 28 November 2000 were not fully executed.

On 12 January 2001, applicant filed a response to the 14 December 2000 notification including a declaration signed by "Tracy Knudsen". The response states that inventor Tracy Tetzlaff changed her name to Tracy Knudsen as a result of marriage. The response was treated as a request to change the name of one of the inventors.

On 07 August 2001, this Office mailed a decision dismissing the 12 January 2001 request.

On 05 September 2001, applicant filed the present petition under 37 CFR 1.182.

DISCUSSION

MPEP 605.04(c) states in relevant part,

> In cases where an inventor's name has been changed after the application has been filed and the inventor desires to change his or her name on the application, he or she must submit a petition under 37 CFR 1.182. . . . The petition must include an appropriate petition fee and an affidavit signed with both names and setting forth the procedure whereby the change of name was effected, or a certified copy of the court order.

In the present case, applicant has filed a petition under 37 CFR 1.182 along with the requisite petition fee. The petition includes an affidavit stating that inventor Tracy Tetzlaff changed her name to Tracy Knudsen as a result of marriage. However, the affidavit is not signed with both names as required by MPEP 605.04(c).

CONCLUSION

For the reasons above, the petition under 37 CFR 1.182 is DISMISSED without prejudice.

If reconsideration on the merits of the petition is desired, a proper response must be filed within TWO (2) MONTHS from the mail date of this decision. Failure to timely file a proper response will result in ABANDONMENT of the application. Any reconsideration request should include a cover letter entitled "Renewed Petition Under 37 CFR 1.182". No additional petition fee is required. Extensions of time are available under 37 CFR 1.136.

Please direct further correspondence with respect to this matter to the Commissioner for Patents, Box PCT, Washington, D.C. 20231, and address the contents of the letter to the attention of the PCT Legal Office.

Bryan Tung
PCT Legal Examiner
PCT Legal Office

Telephone: 703-308-6614
Facsimile: 703-308-6459

Tracy Knudsen to change her name in this application. This application is the U. S. national phase of a Patent Cooperation Treaty application in which the Petitioner was identified as Tracy L. Tetzlaff. Subsequent to the filing of the international phase of this application, but before a signed declaration was submitted in the U. S. national phase, the Petitioner married and took her husband's surname.

The petition fee of $130.00 (37 C. F. R. § 1.17(h)) is enclosed herewith. Should any additional fee be required, the Commissioner is hereby authorized to charge Applicants' undersigned counsel's deposit account 10-0435. A duplicate copy of this authorization is enclosed for that purpose.

Since the Petitioner has already submitted a declaration signed by her as Tracy Knudsen, all that remains to complete all of the filing formalities associated with this application is for this petition to be granted. Such action is respectfully requested.

Respectfully submitted,

Richard D. Conard,
Atty. Reg. No. 27321,
Attorney for Applicants

Indianapolis, Indiana 46204
(317) 231-7285

INDS02 RDC 400927

10 10435
127 130

BARNES & THORNBURG
11 South Meridian Street
Indianapolis, Indiana 46204
(317) 236-1313

PATENT APPLICATION

IN THE UNITED STATES PATENT AND TRADEMARK OFFICE

Group:	Unknown
Attorney Docket:	5727-65998
Applicant:	BATMAN, Carol Jane; BYRD Nancy Kennedy; DISHOP, Timothy J.; HENDERSON, Les G.; HOPKINSON, Patricia A.; MOAK, Stephen E.; PARKER, James R.; POLASKI, Frank M.; SHEARER, Atwell R.; TETZLAFF, Tracy L.; SLY, Lynne Denise; KLEM, Kurt Gerard
Invention:	INSTRUMENT SETUP UTILITY PROGRAM
U.S. Serial No:	09/555,718
International. Serial No:	PCT/US98/25850
International Filing Date:	04 December 1998 (04.12.98)
Earliest Priority Date:	04 December 1997 (04.12.97)

LETTER ACCOMPANYING PETITION UNDER 37 C. F. R. § 1.182

Assistant Commissioner for Patents
Washington, D.C. 20231
Attention: Brian Tung
PCT Legal Examiner
PCT Legal Office

Sir:

This letter is submitted in response to the August 7, 2001 dismissal of a request to change the name of one of the applicants, and accompanies a petition by Applicant

Tracy Knudsen to change her name in this application. This application is the U. S. national phase of a Patent Cooperation Treaty application in which the Petitioner was identified as Tracy L. Tetzlaff. Subsequent to the filing of the international phase of this application, but before a signed declaration was submitted in the U. S. national phase, the Petitioner married and took her husband's surname.

The petition fee of $130.00 (37 C. F. R. § 1.17(h)) is enclosed herewith. Should any additional fee be required, the Commissioner is hereby authorized to charge Applicants' undersigned counsel's deposit account 10-0435. A duplicate copy of this authorization is enclosed for that purpose.

Since the Petitioner has already submitted a declaration signed by her as Tracy Knudsen, all that remains to complete all of the filing formalities associated with this application is for this petition to be granted. Such action is respectfully requested.

Respectfully submitted,

Richard D. Conard,
Atty. Reg. No. 27321,
Attorney for Applicants

Indianapolis, Indiana 46204
(317) 231-7285

INDS02 RDC 400927

3 1 MAR 2003

UNITED STATES PATENT AND TRADEMARK OFFICE

COMMISSIONER FOR PATENTS
UNITED STATES PATENT AND TRADEMARK OFFICE
WASHINGTON, D.C. 20231
www.uspto.gov

Richard D. Conard
Barnes & Thornburg
11 South Meridian Street
Indianapolis, IN 46204

In re Application of BATMAN et al	:	
U.S. Application No.: 09/555,718	:	
Int. Application No.: PCT/US98/25850	:	DECISION
Int. Filing Date: 04 December 1998	:	
Priority Date: 04 December 1997	:	
Attorney Docket No.: 5727-65998	:	
For: INSTRUMENT SETUP UTILITY PROGRAM	:	

This is in response to applicant's "Renewed Petition Under 37 C.F.R. § 1.182" filed 24 March 2003.

BACKGROUND

On 04 December 1998, applicant filed international application PCT/US98/25850, which claimed priority of an earlier United States application filed 04 December 1997. A Demand for international preliminary examination, in which the United States was elected, was filed on 09 June 1999, prior to the expiration of nineteen months from the priority date. Accordingly, the thirty-month period for paying the basic national fee in the United States expired at midnight on 05 June 2000 (04 June 2000 was a Sunday).

On 02 June 2000, applicant filed national stage papers in the United States. The submission was accompanied by, *inter alia*, the basic national fee required by 35 U.S.C. 371(c)(1).

On 30 June 2000, the United States Designated/Elected Office (DO/EO/US) mailed a Notification of Missing Requirements Under 35 U.S.C. 371 (Form PCT/DO/EO/905), indicating that an oath or declaration in compliance with 37 CFR 1.497 must be filed.

On 28 November 2000, applicant filed executed declarations signed by eleven of the twelve joint inventors and not signed by inventor Tracy Tetzlaff.

On 14 December 2000, the DO/EO/US mailed a Notification of a Defective Response (Form PCT/DO/EO/916) along with a Notification of a Defective Oath or Declaration (Form PCT/DO/EO/917) indicating that the declarations filed 28 November 2000 were not fully executed.

On 12 January 2001, applicant filed a response to the 14 December 2000 notification including a declaration signed by "Tracy Knudsen". The response states that inventor Tracy Tetzlaff changed her name to Tracy Knudsen as a result of marriage. The response was treated as a request to change the name of one of the inventors.

On 07 August 2001, this Office mailed a decision dismissing the 12 January 2001 request.

On 05 September 2001, applicant filed a petition under 37 CFR 1.182.

On 05 March 2003, this Office mailed a decision dismissing the 05 September 2001 petition.

On 24 March 2003, applicant filed the present renewed petition under 37 CFR 1.182.

DISCUSSION

MPEP 605.04(c) states in relevant part,

> In cases where an inventor's name has been changed after the application has been filed and the inventor desires to change his or her name on the application, he or she must submit a petition under 37 CFR 1.182. . . . The petition must include an appropriate petition fee and an affidavit signed with both names and setting forth the procedure whereby the change of name was effected, or a certified copy of the court order.

The renewed petition includes an affidavit stating that inventor Tracy Tetzlaff changed her name to Tracy Knudsen as a result of marriage. The affidavit is signed with both names as required by MPEP 605.04(c).

CONCLUSION

For the reasons above, the renewed petition under 37 CFR 1.182 is GRANTED.

The application has an International Filing Date of 04 December 1998 and a date under 35 U.S.C. 371(c) of 12 January 2001.

The application is being forwarded to the DO/EO/US for processing in accordance with this decision.

Bryan Tung
PCT Legal Examiner
PCT Legal Office

Telephone: 703-308-6614
Facsimile: 703-308-6459

UNITED STATES PATENT AND TRADEMARK OFFICE

Commissioner for Patents
United States Patent and Trademark Office
P.O. Box 1450
Alexandria, VA 22313-1450
www.uspto.gov

CROWELL & MORING, L.L.P.
INTELLECTUAL PROPERTY GROUP
P.O. BOX 14300
WASHINGTON, DC 20044-4300

COPY MAILED

MAY 2 3 2005

OFFICE OF PETITIONS

In re Application of	:	
Brauchle et al.	:	
Application No. 09/555,899	:	ON PETITION
Filed: July 20, 2000	:	
Attorney Docket No. 225/48888	:	

This is a decision on the petition under 37 C.F.R. § 1.137(b), filed February 2, 2005, to revive the above-identified application.

The petition is **GRANTED.**

This application became abandoned for failure to timely reply to the non-final Office action mailed March 4, 2004. No extensions of time under the provisions of 37 CFR 1.136(a) were obtained. Accordingly, this application became abandoned on June 5, 2004. A Notice of Abandonment was mailed September 10, 2004.

Petitioner has met the requirements to revive the above-identified application pursuant to 37 CFR 1.137(b).

This matter is being referred to Technology Center 1700 for further examination on the merits.

Telephone inquiries regarding this decision should be directed to the undersigned at (571) 272-3282.

Liana Chase
Petitions Examiner
Office of Petitions
Office of the Deputy Commissioner
for Patent Examination Policy

SPE RESPONSE FOR CERTIFICATE OF CORRECTION

Paper No.:20090817

DATE : August 25, 2009

TO SPE OF : ART UNIT 2182

SUBJECT : Request for Certificate of Correction on Patent No.: 6,557,054

A response is requested with respect to the accompanying request for a certificate of correction.

Please complete this form and return with file, within **7** days to:
Certificates of Correction Branch - PK 3-910
Palm location **7590** - Tel. No. 305-8201

With respect to the change(s) requested, correcting Office and/or Applicant's errors, should the patent read as shown in the certificate of correction? No new matter should be introduced, nor should the scope or meaning of the claims be changed.

Thank You For Your Assistance **Certificates of Correction Branch**

The request for issuing the above-identified correction(s) is hereby:
Note your decision on the appropriate box.

☒ **Approved** **All** changes apply.

☐ **Approved in Part** Specify below which changes **do not** apply.

☐ **Denied** State the reasons for denial below.

Comments:

SPE: /Tariq Hafiz/ **Art Unit** 2182

Under the Paperwork Reduction Act of 1995, no persons are required to respond to a collection of information unless it displays valid OMB control number.

PETITION TO ACCEPT UNINTENTIONALLY DELAYED PAYMENT OF MAINTENANCE FEE IN AN EXPIRED PATENT (37 CFR 1.378(c))

Patent Number	Issue Date (YYYY-MM-DD)	Application Number	Filing Date (YYYY-MM-DD)	Docket Number (if applicable)
6471860	2002-10-29	09556179	2000-04-20	022370-001400US

CAUTION: Maintenance fee (and surcharge, if any) payment must correctly identify: (1) the patent number and (2) the application number of the actual U.S. application leading to issuance of that patent to ensure the fee(s) is/are associated with the correct patent. 37 CFR 1.366(c) and (d).

SMALL ENTITY
☐ Patentee claims, or has previously claimed, small entity status. See 37 CFR 1.27.

LOSS OF ENTITLEMENT TO SMALL ENTITY STATUS
☒ Patentee is no longer entitled to small entity status. See 37 CFR 1.27(g)

NOT Small Entity		Small Entity	
Fee	Code	Fee	Code
◉ 3 ½ year	(1551)	○ 3 ½ year	(2551)
○ 7 ½ year	(1552)	○ 7 ½ year	(2552)
○ 11 ½ year	(1553)	○ 11 ½ year	(2553)

SURCHARGE
The surcharge required by 37 CFR 1.20(i)(2) (Fee Code 1558) must be paid as a condition of accepting unintentionally delayed payment of the maintenance fee.

MAINTENANCE FEE (37 CFR 1.20(e)-(g))
The appropriate maintenance fee must be submitted with this petition.

STATEMENT
THE UNDERSIGNED CERTIFIES THAT THE DELAY IN PAYMENT OF THE MAINTENANCE FEE TO THIS PATENT WAS UNINTENTIONAL

PETITIONER(S) REQUEST THAT THE DELAYED PAYMENT OF THE MAINTENANCE FEE BE ACCEPTED AND THE PATENT REINSTATED

THIS PORTION MUST BE COMPLETED BY THE SIGNATORY OR SIGNATORIES

37 CFR 1.378(d) states: "Any petition under this section must be signed by an attorney or agent registered to practice before the Patent and Trademark Office, or by the patentee, the assignee, or other party in interest."

I certify, in accordance with 37 CFR 1.4(d)(4) that I am

◉ An attorney or agent registered to practice before the Patent and Trademark Office

○ A sole patentee

○ A joint patentee; I certify that I am authorized to sign this submission on behalf of all the other patentees.

○ A joint patentee; all of whom are signing this e-petition

○ The assignee of record of the entire interest

Patent Practitioner			
A signature of the applicant or representative is required in accordance with 37 CFR 1.33 and 10.18. Please see 37 CFR 1.4(d) for the form of the signature			
Signature	/Randolph T. Apple/	Date (YYYY-MM-DD)	2007-11-29
Name	Randolph T. Apple	Registration Number	36429

This collection of information is required by 37 CFR 1.378(c). The information is required to obtain or retain a benefit by the public which is to file (and by the USPTO to process) an application. Confidentiality is governed by 35 U.S.C. 122 and 37 CFR 1.11 and 1.14. This collection is estimated to take 1 hour to complete, including gathering, preparing, and submitting the completed application form to the USPTO. Time will vary depending upon the individual case. Any comments on the amount of time you require to complete this form and/ or suggestions for reducing this burden, should be sent to the Chief Information Officer, U.S. Patent and Trademark Office, U.S. Department of Commerce, P.O. Box 1450, Alexandria, VA 22313-1450. DO NOT SEND FEES OR COMPLETED FORMS TO THIS ADDRESS. **This form can only be used when in conjunction with EFS-Web. If this form is mailed to the USPTO, it may cause delays in reinstating the patent.**

Privacy Act Statement

The Privacy Act of 1974 (P.L. 93-579) requires that you be given certain information in connection with your submission of the attached form related to a patent application or patent. Accordingly, pursuant to the requirements of the Act, please be advised that: (1) the general authority for the collection of this information is 35 U.S.C. 2(b)(2); (2) furnishing of the information solicited is voluntary; and (3) the principal purpose for which the information is used by the U.S. Patent and Trademark Office is to process and/or examine your submission related to a patent application or patent. If you do not furnish the requested information, the U.S. Patent and Trademark Office may not be able to process and/or examine your submission, which may result in termination of proceedings or abandonment of the application or expiration of the patent.

The information provided by you in this form will be subject to the following routine uses:

1. The information on this form will be treated confidentially to the extent allowed under the Freedom of Information Act (5 U.S.C. 552) and the Privacy Act (5 U.S.C. 552a). Records from this system of records may be disclosed to the Department of Justice to determine whether the Freedom of Information Act requires disclosure of these record s.

2. A record from this system of records may be disclosed, as a routine use, in the course of presenting evidence to a court, magistrate, or administrative tribunal, including disclosures to opposing counsel in the course of settlement negotiations.

3. A record in this system of records may be disclosed, as a routine use, to a Member of Congress submitting a request involving an individual, to whom the record pertains, when the individual has requested assistance from the Member with respect to the subject matter of the record.

4. A record in this system of records may be disclosed, as a routine use, to a contractor of the Agency having need for the information in order to perform a contract. Recipients of information shall be required to comply with the requirements of the Privacy Act of 1974, as amended, pursuant to 5 U.S.C. 552a(m).

5. A record related to an International Application filed under the Patent Cooperation Treaty in this system of records may be disclosed, as a routine use, to the International Bureau of the World Intellectual Property Organization, pursuant to the Patent Cooperation Treaty.

6. A record in this system of records may be disclosed, as a routine use, to another federal agency for purposes of National Security review (35 U.S.C. 181) and for review pursuant to the Atomic Energy Act (42 U.S.C. 218(c)).

7. A record from this system of records may be disclosed, as a routine use, to the Administrator, General Services, or his/her designee, during an inspection of records conducted by GSA as part of that agency's responsibility to recommend improvements in records management practices and programs, under authority of 44 U.S.C. 2904 and 2906. Such disclosure shall be made in accordance with the GSA regulations governing inspection of records for this purpose, and any other relevant (i.e., GSA or Commerce) directive. Such disclosure shall not be used to make determinations about individuals.

8. A record from this system of records may be disclosed, as a routine use, to the public after either publication of the application pursuant to 35 U.S.C. 122(b) or issuance of a patent pursuant to 35 U.S.C. 151. Further, a record may be disclosed, subject to the limitations of 37 CFR 1.14, as a routine use, to the public if the record was filed in an application which became abandoned or in which the proceedings were terminated and which application is referenced by either a published application, an application open to public inspections or an issued patent.

9. A record from this system of records may be disclosed, as a routine use, to a Federal, State, or local law enforcement agency, if the USPTO becomes aware of a violation or potential violation of law or regulation.

UNITED STATES PATENT AND TRADEMARK OFFICE

Commissioner for Patents
United States Patent and Trademark Office
P.O. Box 1450
Alexandria, VA 22313-1450
www.uspto.gov

In re Patent No. 6471860
Issue Date: October 29,2002
Application No. 09556179
Filed: April 20,2000
Attorney Docket No. MILT-003CON

:

:DECISION GRANTING PETITION
:UNDER 37 CFR 1.378(c)

:

This is a decision on the electronic petition, filed November 29,2007 ,under 37 CFR 1.378(c) to accept the unintentionally delayed payment of the 3.5 year maintenance fee for the above-identified patent.

The petition is GRANTED.

The maintenance fee is accepted, and the above-identified patent reinstated as of November 29,2007. This decision also constitutes notice that the fee has been accepted. An electronic copy of the petition and this decision has been created as an entry in an Image File Wrapper. Nevertheless, petitioner should print and retain an independent copy

Telephone inquires related to this electronic decision should be directed to the Electronic Business Center at 1-866-217-9197.

COMMISSIONER FOR PATENTS
UNITED STATES PATENT AND TRADEMARK OFFICE
WASHINGTON, D.C. 20231
www.uspto.gov

Paper No. 7

COPY MAILED

APR 18 2001

OFFICE OF PETITIONS
A/C PATENTS

Bracewell and Patterson LLP
South Tower Pennzoil Place
711 Louisiana Street, Suite 2900
Houston, Texas 77002-2781

In re Application of :
David Stanard :
Application No. 09/556,333 : DECISION ON PETITION
Filed: April 24, 2000 :
Attorney Docket No. 084675.00900 :

This is a decision on the petition under 37 CFR § 1.137(b), filed March 28, 2001, to revive the above-identified application.

The petition is **granted**.

This application became abandoned for failure to respond in an appropriate and timely manner to the "Notice to File Missing Parts" mailed July 3, 2000, which set forth a two (2) month shortened period for reply. No extensions of time under 37 CFR § 1.136(a) were obtained. Accordingly, this application became abandoned on September 4, 2000.

Petitioner responded appropriately to the "Notice to File Missing Parts" by filing on March 28, 2001, a "Declaration of Patent Application." Petitioner also filed a "Verified Statement Claiming Small Entity Status-Independent Inventor" which is noted and made of record.

The application is being forward to the Office of Initial Patent Examination for further processing.

Telephone inquiries concerning this matter may be directed to Kenya A. McLaughlin, Petitions Attorney, at (703) 305-0010.

D Mead

for Beverly M. Flanagan
Supervisory Petitions Examiner
Office of Petitions
Office of the Deputy Commissioner
for Patent Examination Policy

UNITED STATES PATENT AND TRADEMARK OFFICE

Commissioner for Patents
United States Patent and Trademark Office
P.O. Box 1450
Alexandria, VA 22313-1450
www.uspto.gov

GORDON T. ARNOLD
ARNOLD & ASSOCIATES
2401 FOUNTAINVIEW
SUITE 630
HOUSTON TX 77057

COPY MAILED
APR 25 2006
OFFICE OF PETITIONS

In re Application of David Stanard Application No. 09/556,333 Filed: April 24, 2000 Attorney Docket No. E30849RCE	:	DECISION ON PETITION TO WITHDRAW FROM RECORD

This is a decision on the Request to Withdraw as attorney or agent of record under 37 C.F.R. § 1.36(b), filed February 3, 2006.

The petition is **APPROVED**.

A grantable request to withdraw as attorney/agent of record must be signed by every attorney/agent seeking to withdraw or contain a clear indication that one attorney is signing on behalf of another/others. A request to withdraw will not be approved unless at least 30 (thirty) days would remain between the date of approval and the later of the expiration date of a time to file a response or the expiration date of the maximum time period which can be extended under 37 C.F.R. § 1.136(a).

The request was signed by Gordon T. Arnold on behalf of all the attorneys/agents of record.

All attorneys/agents of record have been withdrawn.

Applicant is reminded that there is no attorney of record at this time.

The correspondence address of record has been changed and the new correspondence address is the address indicated below.

Telephone inquires concerning this decision should be directed to Karen Creasy at 571-272-3208.

This application stands abandoned for failure to timely file a reply to the non-final Office action mailed September 21, 2005.

Amelia Au
Petitions Examiner
Office of Petitions

cc:
MR. CHARLES H. GARRETT
EXTREMETIX, INC.
13111 NORTHWEST FREEWAY, SUITE 520
HOUSTON TX 77040

UNITED STATES PATENT AND TRADEMARK OFFICE

COMMISSIONER FOR PATENTS
UNITED STATES PATENT AND TRADEMARK OFFICE
P.O. BOX 1450
ALEXANDRIA, VA 22313-1450
www.uspto.gov

MAILED

JUL - 1 2005

DIRECTOR'S OFFICE
TECHNOLOGY CENTER 2600

Meschkow & Gresham
5727 North Seventh Street
Phoenix, AZ 85014

In re Application of
David G. Worthy
Application No. 09/556,339
Filed: April 24, 2000
For: **BIAS COMPENSATING REMOTE AUDIENCE SURVEY SYSTEM AND METHOD**

DECISION ON REQUEST TO WITHDRAW FROM RECORD

This is a decision on the Request for Withdrawal as attorney or agent and change of address filed on May 13, 2005.

A grantable request to withdraw, as attorney/agent of record must:
(1) Indicate the present mailing address of the attorney(s)/agent(s) who seek(s) to withdraw, and
(2) Be signed by each attorney/agent seeking to withdraw or clearly be signed on their behalf, and
(3) Be *approved* at least thirty (30) days prior to the maximum extendable period for response to any outstanding Office Action, and
(4) Indicate the address to which future correspondence should be mailed.

Petitioner has met all of the above. Accordingly, the request is **GRANTED**.

All attorneys/agents in the request are withdrawn.

All future communications from the Office will be directed to the address listed below until otherwise notified by applicant. Applicant is reminded of the obligation to promptly notify the Patent and Trademark Office of any change in correspondence address to ensure receipt of all communications from the Office.

Ken A. Wieder
Special Program Examiner
Technology Center 2600
Communications
(571) 272-2986

CC:

BANNER & WITCOFF
1001 G STREET N W
SUITE 1100
WASHINGTON DC 20001

UNITED STATES PATENT AND TRADEMARK OFFICE

Commissioner for Patents
United States Patent and Trademark Office
P.O. Box 1450
Alexandria, VA 22313-1450
www.uspto.gov

BANNER & WITCOFF
1001 G STREET N W
SUITE 1100
WASHINGTON DC 20001

MAIL

AUG 2 4 2005

DIRECTOR OFFICE
TECHNOLOGY CENTER 2600

In re Application of
David G. Worthy
Application No. 09/556,339
Filed: April 24, 2000
For: **BIAS COMPENSATING REMOTE AUDIENCE SURVEY SYSTEM AND METHOD**

DECISION ON PETITION
TO WITHDRAW HOLDING OF
ABANDONMENT

This is a decision on the petition filed July 15, 2005 to withdraw holding of abandonment pursuant to 37 C.F.R.§ 1.181(a). No fee is required.

The petition is **GRANTED.**

The application was abandoned for failure to respond in a timely and effective manner to the non-final Office action mailed December 14, 2004. A Notice of Abandonment was mailed on June 24, 2005.

Petitioner asserts that a proper response was timely filed on June 16, 2005. In support of the petition, Petitioner has submitted, a copy of Applicant's reply including amendment, terminal disclaimer and petition for extension of time (3 months) and a date-stamped post card receipt evidencing receipt of the response within the United States Patent & Trademark Office (USPTO) on June 16, 2005.

The original correspondence filed was not matched with the application file and cannot be located. However, M.P.E.P. § 503 states, "[a] post card receipt which itemizes and properly identifies the papers which are being filed serves as *prima facie* evidence of receipt in the U.S.PTO of all the items listed thereon on the date stamped thereon by the PTO." Accordingly, it is concluded that the response was timely filed in the Patent and Trademark Office but not matched with the application file. The fees submitted with the original response have been received and credited to the instant application.

In view of the above stated reasons, the Notice of Abandonment is hereby vacated and the holding of abandonment withdrawn.

The application file will be forwarded to the Technology Center's technical support staff for appropriate processing and entry of the amendment and terminal disclaimer. From there, the file will be forwarded to the examiner for further examination in due course.

Krista Zele
Special Program Examiner
Technology Center 2600
Communications

UNITED STATES PATENT AND TRADEMARK OFFICE

Commissioner for Patents
United States Patent and Trademark Office
P.O. Box 1450
Alexandria, VA 22313-1450
www.uspto.gov

BANNER & WITCOFF
1001 G STREET N W
SUITE 1100
WASHINGTON DC 20001

MAIL

AUG 2 4 2005

DIRECTOR OFFICE
TECHNOLOGY CENTER 2600

In re Application of
David G. Worthy
Application No. 09/556,339
Filed: April 24, 2000
For: **BIAS COMPENSATING REMOTE AUDIENCE SURVEY SYSTEM AND METHOD**

DECISION ON PETITION
TO WITHDRAW HOLDING OF
ABANDONMENT

This is a decision on the petition filed July 15, 2005 to withdraw holding of abandonment pursuant to 37 C.F.R.§ 1.181(a). No fee is required.

The petition is **GRANTED.**

The application was abandoned for failure to respond in a timely and effective manner to the non-final Office action mailed December 14, 2004. A Notice of Abandonment was mailed on June 24, 2005.

Petitioner asserts that a proper response was timely filed on June 16, 2005. In support of the petition, Petitioner has submitted, a copy of Applicant's reply including amendment, terminal disclaimer and petition for extension of time (3 months) and a date-stamped post card receipt evidencing receipt of the response within the United States Patent & Trademark Office (USPTO) on June 16, 2005.

The original correspondence filed was not matched with the application file and cannot be located. However, M.P.E.P. § 503 states, "[a] post card receipt which itemizes and properly identifies the papers which are being filed serves as *prima facie* evidence of receipt in the U.S.PTO of all the items listed thereon on the date stamped thereon by the PTO." Accordingly, it is concluded that the response was timely filed in the Patent and Trademark Office but not matched with the application file. The fees submitted with the original response have been received and credited to the instant application.

In view of the above stated reasons, the Notice of Abandonment is hereby vacated and the holding of abandonment withdrawn.

The application file will be forwarded to the Technology Center's technical support staff for appropriate processing and entry of the amendment and terminal disclaimer. From there, the file will be forwarded to the examiner for further examination in due course.

Krista Zele
Special Program Examiner
Technology Center 2600
Communications

UNITED STATES PATENT AND TRADEMARK OFFICE

Commissioner for Patents
United States Patent and Trademark Office
P.O. Box 1450
Alexandria, VA 22313-1450
www.uspto.gov

In re Patent No. 6560560
Issue Date: May 6,2003
Application No. 09556384
Filed: April 24,2000
Attorney Docket No. ERIC-1

:
:DECISION GRANTING PETITION
:UNDER 37 CFR 1.378(c)
:

This is a decision on the electronic petition, filed July 31,2007 ,under 37 CFR 1.378(c) to accept the unintentionally delayed payment of the 3.5 year maintenance fee for the above-identified patent.

The petition is GRANTED.

The maintenance fee is accepted, and the above-identified patent reinstated as of July 31,2007 . This decision also constitutes notice that the fee has been accepted. An electronic copy of the petition and this decision has been created as an entry in an Image File Wrapper. Nevertheless, petitioner should print and retain an independent copy

Telephone inquires related to this electronic decision should be directed to the Electronic Business Center at 1-866-217-9197.

Under the Paperwork Reduction Act of 1995, no persons are required to respond to a collection of information unless it displays valid OMB control number.

PETITION TO ACCEPT UNINTENTIONALLY DELAYED PAYMENT OF MAINTENANCE FEE IN AN EXPIRED PATENT (37 CFR 1.378(c))

Patent Number	Issue Date (YYYY-MM-DD)	Application Number	Filing Date (YYYY-MM-DD)	Docket Number (if applicable)
6560560	2003-05-06	09556384	2000-04-24	ERIC-1

CAUTION: Maintenance fee (and surcharge, if any) payment must correctly identify: (1) the patent number and (2) the application number of the actual U.S. application leading to issuance of that patent to ensure the fee(s) is/are associated with the correct patent. 37 CFR 1.366(c) and (d).

SMALL ENTITY
☒ Patentee claims, or has previously claimed, small entity status. See 37 CFR 1.27.

LOSS OF ENTITLEMENT TO SMALL ENTITY STATUS
☐ Patentee is no longer entitled to small entity status. See 37 CFR 1.27(g)

NOT Small Entity		Small Entity	
Fee	Code	Fee	Code
○ 3 ½ year	(1551)	◉ 3 ½ year	(2551)
○ 7 ½ year	(1552)	○ 7 ½ year	(2552)
○ 11 ½ year	(1553)	○ 11 ½ year	(2553)

SURCHARGE
The surcharge required by 37 CFR 1.20(i)(2) (Fee Code 1558) must be paid as a condition of accepting unintentionally delayed payment of the maintenance fee.

MAINTENANCE FEE (37 CFR 1.20(e)-(g))
The appropriate maintenance fee must be submitted with this petition.

STATEMENT
THE UNDERSIGNED CERTIFIES THAT THE DELAY IN PAYMENT OF THE MAINTENANCE FEE TO THIS PATENT WAS UNINTENTIONAL

PETITIONER(S) REQUEST THAT THE DELAYED PAYMENT OF THE MAINTENANCE FEE BE ACCEPTED AND THE PATENT REINSTATED

THIS PORTION MUST BE COMPLETED BY THE SIGNATORY OR SIGNATORIES

37 CFR 1.378(d) states: "Any petition under this section must be signed by an attorney or agent registered to practice before the Patent and Trademark Office, or by the patentee, the assignee, or other party in interest."

I certify, in accordance with 37 CFR 1.4(d)(4) that I am

◉ An attorney or agent registered to practice before the Patent and Trademark Office

○ A sole patentee

○ A joint patentee; I certify that I am authorized to sign this submission on behalf of all the other patentees.

○ A joint patentee; all of whom are signing this e-petition

○ The assignee of record of the entire interest

Patent Practitioner			
A signature of the applicant or representative is required in accordance with 37 CFR 1.33 and 10.18. Please see 37 CFR 1.4(d) for the form of the signature			
Signature	/Leonard Tachner/	Date (YYYY-MM-DD)	2007-07-31
Name	LEONARD TACHNER	Registration Number	26344

This collection of information is required by 37 CFR 1.378(c). The information is required to obtain or retain a benefit by the public which is to file (and by the USPTO to process) an application. Confidentiality is governed by 35 U.S.C. 122 and 37 CFR 1.11 and 1.14. This collection is estimated to take 1 hour to complete, including gathering, preparing, and submitting the completed application form to the USPTO. Time will vary depending upon the individual case. Any comments on the amount of time you require to complete this form and/ or suggestions for reducing this burden, should be sent to the Chief Information Officer, U.S. Patent and Trademark Office, U.S. Department of Commerce, P.O. Box 1450, Alexandria, VA 22313-1450. DO NOT SEND FEES OR COMPLETED FORMS TO THIS ADDRESS. **This form can only be used when in conjunction with EFS-Web. If this form is mailed to the USPTO, it may cause delays in reinstating the patent.**

Privacy Act Statement

The Privacy Act of 1974 (P.L. 93-579) requires that you be given certain information in connection with your submission of the attached form related to a patent application or patent. Accordingly, pursuant to the requirements of the Act, please be advised that: (1) the general authority for the collection of this information is 35 U.S.C. 2(b)(2); (2) furnishing of the information solicited is voluntary; and (3) the principal purpose for which the information is used by the U.S. Patent and Trademark Office is to process and/or examine your submission related to a patent application or patent. If you do not furnish the requested information, the U.S. Patent and Trademark Office may not be able to process and/or examine your submission, which may result in termination of proceedings or abandonment of the application or expiration of the patent.

The information provided by you in this form will be subject to the following routine uses:

1. The information on this form will be treated confidentially to the extent allowed under the Freedom of Information Act (5 U.S.C. 552) and the Privacy Act (5 U.S.C. 552a). Records from this system of records may be disclosed to the Department of Justice to determine whether the Freedom of Information Act requires disclosure of these record s.

2. A record from this system of records may be disclosed, as a routine use, in the course of presenting evidence to a court, magistrate, or administrative tribunal, including disclosures to opposing counsel in the course of settlement negotiations.

3. A record in this system of records may be disclosed, as a routine use, to a Member of Congress submitting a request involving an individual, to whom the record pertains, when the individual has requested assistance from the Member with respect to the subject matter of the record.

4. A record in this system of records may be disclosed, as a routine use, to a contractor of the Agency having need for the information in order to perform a contract. Recipients of information shall be required to comply with the requirements of the Privacy Act of 1974, as amended, pursuant to 5 U.S.C. 552a(m).

5. A record related to an International Application filed under the Patent Cooperation Treaty in this system of records may be disclosed, as a routine use, to the International Bureau of the World Intellectual Property Organization, pursuant to the Patent Cooperation Treaty.

6. A record in this system of records may be disclosed, as a routine use, to another federal agency for purposes of National Security review (35 U.S.C. 181) and for review pursuant to the Atomic Energy Act (42 U.S.C. 218(c)).

7. A record from this system of records may be disclosed, as a routine use, to the Administrator, General Services, or his/her designee, during an inspection of records conducted by GSA as part of that agency's responsibility to recommend improvements in records management practices and programs, under authority of 44 U.S.C. 2904 and 2906. Such disclosure shall be made in accordance with the GSA regulations governing inspection of records for this purpose, and any other relevant (i.e., GSA or Commerce) directive. Such disclosure shall not be used to make determinations about individuals.

8. A record from this system of records may be disclosed, as a routine use, to the public after either publication of the application pursuant to 35 U.S.C. 122(b) or issuance of a patent pursuant to 35 U.S.C. 151. Further, a record may be disclosed, subject to the limitations of 37 CFR 1.14, as a routine use, to the public if the record was filed in an application which became abandoned or in which the proceedings were terminated and which application is referenced by either a published application, an application open to public inspections or an issued patent.

9. A record from this system of records may be disclosed, as a routine use, to a Federal, State, or local law enforcement agency, if the USPTO becomes aware of a violation or potential violation of law or regulation.

UNITED STATES PATENT AND TRADEMARK OFFICE

COMMISSIONER FOR PATENTS
UNITED STATES PATENT AND TRADEMARK OFFICE
WASHINGTON, D.C. 20231
www.uspto.gov

Paper No. 11

BLANK ROME COMISKY & MCCAULEY, LLP
900 17TH STREET, N.W., SUITE 1000
WASHINGTON, DC 20006

COPY MAILED

OCT 0 1 2002

OFFICE OF PETITIONS

ON PETITION

In re Application of :
McGraw et al. :
Application No. 09/556,389 :
Filed: April 24, 2000 :
Attorney Docket No. 000309.00011 :

This is a decision on the petition under 37 CFR 1.181, filed December 11, 2001, and supplemented June 4, 2002, requesting refund of a filing fee, a notice of appeal fee, and extension of time fees.

The petition is **DISMISSED**. The Office does not have the authority to grant the relief requested.

Analysis:

35 USC 41(a) states, "The Director shall charge the following fees:"

35 USC 41(a)(1)(A) states, "On filing each application for an original patent, except in design or plant cases, $690."

35 USC 41(a)(6)(A) states, "On filing an appeal from the examiner to the Board of Patent Appeals and Interferences, $300."

35 USC 41(a)(8) states, "For petitions for 1-month extensions of time to take actions required by the Director in an application-
(A) on filing a first petition, $110;
(B) on filing a second petition, $270; and
(C) on filing a third or subsequent petition, $490."

The use of the word "shall" in 35 USC 41 requires the Office to charge the fees.[1] Once the fees have been "charge[d]," the Office does not have the authority to refund the fee except under 35 USC 42 which permits refund of "any fee paid by mistake or any amount paid in excess of that required."

[1] It is well settled that the use of "shall" in a statute is the language of command, and where the directions of a statute are mandatory, then strict compliance with the statutory terms is essential. Farrel Corp. V. U.S. Int'l Trade Comm'n, 942 F.2d 1147, 20 USPQ2d 1912 (Fed. Cir. 1991). The court in Boyden v. Comm'r of Patents, 441 F.2d 1041, fn 3, (D.C. Cir. 1971) states, "'Shall' is the language of command, Escoe v. Zerbst, 295 U.S. 490, 493, 55 S. Ct. 818, 79 L. Ed. 1566 (1935) as Mr. Justice Cardozo observed for a unanimous court. And see the discussion by Mr. Justice Stone in Richbourg Motor Co. v. United States, 281 U.S. 528, 534, 50 S. Ct. 385, 74 L. Ed. 1016 (1930)."

The court in BEC Pressure Controls Corp. v. Dwyer Instruments, Inc., 380 F.Supp. 1397, 1399, 182 USPQ 190, 192 (N.D. Ind. 1974), states,

> Although it does not deal specifically with § 151, a more recent case involving the payment of fees to the Patent Office which reinforces the idea of strict compliance with the governing statute expressed in Brenner, supra, is Boyden v. Commissioner of Patents, 142 U.S.App.D.C. 351, 441 F.2d 1041 (1971). There the court said that it is mandatory that the Commissioner of Patents charge and that the applicant pay the fees specified by statute as a prerequisite to the filing of a patent application. More importantly, however, the court noted that the duty of the Commissioner in this regard stems from a clear statutory requirement. Therefore, there is no grant of discretionary power to him, and he has no authority to waive the prescribed payment. Furthermore, the court makes it clear that the federal court is not authorized to order the Commissioner to waive the payment of such filing fees.

For the above reasons, since the fees were "charged" to petitioner's deposit account prior to the filing of the petitions, petitioner must satisfy 35 USC 42(d). Petitioner fails to satisfy 35 USC 42(d) in so far as petitioner has failed to prove that the fees were "paid by mistake." Petitioner intended to file each of the fees and to submit the notice of appeal, the requests for extension of time, and CPA. The fees were not paid by mistake.

MPEP 607.02 states,

> When an applicant or patentee takes an action "by mistake" (e.g. files an application or maintains a patent in force "by mistake"), the submission of fees required to take that action (e.g. a filing fee submitted for such patent) is not a "fee paid by mistake" within the meaning of 35 U.S.C. 41 (d).

Petitioner desired a notice of appeal, extension of time, and CPA when he filed the deposited papers, and petitioner received what he paid for. As such, there was no error in relation to the payment of fees to the PTO. In other words, petitioner has filed to show that the asserted mistake when filing the instant papers was a mistake in relation to payment of the fees owed, by law, at the time the papers were filed. The mistake made by petitioner is not a mistake as contemplated by 35 USC 42(d).[2]

Since the petition is being treated as a petition under 37 CFR 1.181, rather than 1.182, the petition fee will be credited to petitioner's deposit account.

The file is now being forwarded to Technology Center 3700.

Telephone inquiries should be directed to Petitions Attorney Steven Brantley at (703) 306-5683.

Charles Steven Brantley
Senior Petitions Attorney
Office of Petitions
Office of the Deputy Commissioner
for Patent Examination Policy

---

[2] See Miessner v. U.S., 228 F.2d 643 (D.C. Cir. 1955).

UNITED STATES PATENT AND TRADEMARK OFFICE

COMMISSIONER FOR PATENTS
UNITED STATES PATENT AND TRADEMARK OFFICE
WASHINGTON, D.C. 20231
www.uspto.gov

Paper No. 13

BLANK ROME COMISKY & MCCAULEY, LLP
900 17TH STREET, N.W., SUITE 1000
WASHINGTON, DC 20006

COPY MAILED

JAN 27 2003

OFFICE OF PETITIONS

ON PETITION

In re Application of :
McGraw et al. :
Application No. 09/556,389 :
Filed: April 24, 2000 :
Attorney Docket No. 000309.00011 :

This is a decision on the renewed petition under 37 CFR 1.181, filed December 2, 2002, requesting refund of a filing fee, a notice of appeal fee, and extension of time fees.

The petition is **DISMISSED**.

Analysis:

35 USC 41(a) states, "The Director shall charge the following fees:"

35 USC 41(a)(1)(A) states, "On filing each application for an original patent, except in design or plant cases, $690."

35 USC 41(a)(6)(A) states, "On filing an appeal from the examiner to the Board of Patent Appeals and Interferences, $300."

35 USC 41(a)(8) states, "For petitions for 1-month extensions of time to take actions required by the Director in an application-
(A) on filing a first petition, $110;
(B) on filing a second petition, $270; and
(C) on filing a third or subsequent petition, $490."

The use of the word "shall" in 35 USC 41 requires the Office to charge the fees.[1] Once the fees have been "charge[d]," the Office does not have the authority to refund the fee except under 35 USC 42 which permits refund of "any fee paid by mistake or any amount paid in excess of that required."

Petitioner cites Ex Parte Grady, 59 U.S.P.Q. 276 for the proposition that the criteria for refund of fees includes, "neglect or misinformation on the part of the office." The words quoted by petitioner are from a federal regulation which no longer exists. Refunds are currently provided for by 37 CFR 1.26 which does not include the quoted language.

---

[1] It is well settled that the use of "shall" in a statute is the language of command, and where the directions of a statute are mandatory, then strict compliance with the statutory terms is essential. Farrel Corp. V. U.S. Int'l Trade Comm'n, 942 F.2d 1147, 20 USPQ2d 1912 (Fed. Cir. 1991). The court in Boyden v. Comm'r of Patents, 441 F.2d 1041, fn 3, (D.C. Cir. 1971) states, "'Shall' is the language of command, Escoe v. Zerbst, 295 U.S. 490, 493, 55 S. Ct. 818, 79 L. Ed. 1566 (1935) as Mr. Justice Cardozo observed for a unanimous court. And see the discussion by Mr. Justice Stone in Richbourg Motor Co. v. United States, 281 U.S. 528, 534, 50 S. Ct. 385, 74 L. Ed. 1016 (1930)."

Petitioner has failed to supply a showing in compliance with 35 USC 42 which permits refund of "any fee paid by mistake or any amount paid in excess of that required." Petitioner had two choices prior to payment of the fees at issue:
(1) not pay the fees and risk abandonment,
(2) pay the fees and therefore eliminate the risk of abandonment.
Petitioner chose option (2). The fee was not paid by mistake. Instead, petitioner intentionally chose to pay the fee. In return, petitioner was able to eliminate the risk of abandonment.

Since petitioner has not provided a showing in compliance with 35 USC 42, the Office does not have the statutory authority to refund the fees.

The file is now being forwarded to Technology Center 3700.

Telephone inquiries should be directed to Petitions Attorney Steven Brantley at (703) 306-5683.

Charles Steven Brantley
Senior Petitions Attorney
Office of Petitions
Office of the Deputy Commissioner
for Patent Examination Policy

UNITED STATES PATENT AND TRADEMARK OFFICE

COMMISSIONER FOR PATENTS
UNITED STATES PATENT AND TRADEMARK OFFICE
WASHINGTON, D.C. 20231
www.uspto.gov

Paper No. 4

Gregory J. Maier
Oblon Spivak McClelland Maier & Neustadt
1755 Jefferson Davis Highway
Fourth Floor
Arlington, Virginia 22202

MAIL

JUN 14 2001

DIRECTOR OFFICE
TECHNOLOGY CENTER 2100

In re Application of: John Amick)
Application No. 09/556,439)
Filed: April 24, 2000)
For: VIRTUAL VOICE/COMPANY/OFFICE)
NETWORK TOOL KIT, METHOD AND)
COMPUTER PROGRAM PRODUCT)

DECISION ON REQUESTS FOR WITHDRAWAL AS ATTORNEY

This is a decision on the Requests To Withdraw from Representation filed June 13, 2001 and September 28, 2000.

A grantable request to withdraw as attorney of record should indicate thereon the present mailing addresses of the attorney(s) who is/are withdrawing from the record and of the applicant. The request for withdrawal must be signed by every attorney seeking to withdraw or contain a clear indication that one attorney is signing on behalf of another/others. A request to withdraw will not be approved unless at least 30 (thirty) days would remain between the date of approval and the later of the expiration date of a time to file a response or the expiration date of the maximum time period which can be extended under 37 C.F.R. § 1. 136(a). The effective date of withdrawal being the date of decision and not the date of request. See M.P.E.P. § 402.06. 37 C.F.R. § 1.36 further requires that the applicant or patent owner be notified of the withdrawal of the attorney or agent.

The request filed June 13, 2001 meets all the requirements. Accordingly the request is **GRANTED**. This filing supersedes the request dated September 28, 2000 which is **DISMISSED** as **MOOT**.

All future communications from the Office will be directed to the below-listed address until otherwise notified by applicant. This correspondence address is provided by the withdrawn attorney(s). Applicant is reminded of the obligation to promptly notify the Patent and Trademark Office (Office) of any change in correspondence address to ensure receipt of all communications from the Office.

Pinchus M. Laufer

Pinchus M. Laufer
Special Programs Examiner
Technology Center 2100
Computer Architecture, Software, and Electronic Commerce
(703) 306-4160

cc: Touch Tone Technologies, Inc.
1 Lincoln Place
1900 Glades Road, Suite 200
Boca Raton, Florida 33431

UNITED STATES PATENT AND TRADEMARK OFFICE

Commissioner for Patents
United States Patent and Trademark Office
P.O. Box 1450
Alexandria, VA 22313-1450
www.uspto.gov

Paper No.

Harvey Lunenfeld
8 Patrician Drive
East Northport, NY 11731

MAILED

FEB 2 4 2006

Technology Center 2100

In re Application of:
John Kenneth Amick
Application No. 09/556,439
Filed: April 24, 2000
For: VIRTUAL VOICE/COMPANY/OFFICE NETWORK TOOL KIT, METHOD, AND COMPUTER PROGRAM PRODUCT

DECISION ON REQUEST TO WITHDRAW AS ATTORNEY OR AGENT

This is a decision on the Request To Withdraw from Representation filed January 26, 2006.

A grantable request to withdraw as attorney of record should indicate thereon the present mailing addresses of the attorney(s) who is/are withdrawing from the record and of the applicant. The request for withdrawal must be signed by every attorney seeking to withdraw or contain a clear indication that one attorney is signing on behalf of another/others. A request to withdraw will not be approved unless at least 30 (thirty) days would remain between the date of approval and the later of the expiration date of a time to file a response or the expiration date of the maximum time period which can be extended under 37 C.F.R. ∋ 1. 136(a). The effective date of withdrawal being the date of decision and not the date of request. See M.P.E.P. ∋ 402.06. 37 C.F.R. ∋ 1.36 further requires that the applicant or patent owner be notified of the withdrawal of the attorney or agent.

The request filed January 26, 2006 meets all the requirements. Accordingly the request is **GRANTED**.

All future communications from the Office will be directed to the below-listed address until otherwise notified by applicant. This correspondence address is provided by the withdrawn attorney(s). Applicant is reminded of the obligation to promptly notify the Patent and Trademark Office (Office) of any change in correspondence address to ensure receipt of all communications from the Office.

James R. Matthews
For Vincent N. Trans
Special Program Examiner
Technology Center 2100
Computer Architecture, Software, and
Information Security
(571) 272-3613

cc: John Kenneth Amick
980 N.W. 49th Way
Coconut Creek, Florida 33063

UNITED STATES PATENT AND TRADEMARK OFFICE

Commissioner for Patents
United States Patent and Trademark Office
P.O. Box 1450
Alexandria, VA 22313-1450
www.uspto.gov

JOHN KENNETH AMICK
980 N.W. 49th WAY
COCONUT CREEK, FL 33063

COPY MAILED

FEB 29 2008

In re Application of	:	
AMICK, John Kenneth	:	
Application No. 09/556,439	:	DECISION ON PETITION
Filed: April 24, 2000	:	TO MAKE SPECIAL UNDER
Attorney Docket No. **8006-0019-13**	:	37 CFR 1.102(c)(1)
	:	

This is a decision on the petition under 37 CFR 1.102(c)(1), filed February 08, 2008, to make the above-identified application special based on applicant's health as set forth in M.P.E.P. § 708.02, Section III.

The petition is **DISMISSED**.

A grantable petition to make an application special under 37 CFR 1.102(c)(1) and MPEP § 708.02, Section III: Applicant's Health, must be accompanied by evidence, such as a doctor's certificate or other medical certificate, showing that the state of health of the applicant is such that he or she might not be available to assist in the prosecution of the application if it were to run its normal course. No fee is required

The instant petition does not include a doctor's certificate or other medical certificate showing the state of the applicant's health.

Petitioner/applicant is cautioned to avoid submitting personal information in documents filed in a patent application that may contribute to identity theft. Personal information such as social security numbers, bank account numbers, or credit card numbers (other than a check or credit card authorization form PTO-2038 submitted for payment purposes) is never required by the USPTO to support a petition or an application. If this type of personal information is included in documents submitted to the USPTO, petitioners/applicants should consider redacting such personal information from the documents before submitting them to the USPTO. Petitioner/applicant is advised that the record of a patent application is available to the public after publication of the application (unless a non-publication request in compliance with 37 CFR 1.213(a) is made in the application) or issuance of a patent. Furthermore, the record from an abandoned application may also be available to the public if the application is referenced in a published application or an issued patent (see 37 CFR 1.14).

Further correspondence with respect to this matter should be addressed as follows:

By Mail: Mail Stop PETITION
Commissioner for Patents
P. O. Box 1450
Alexandria, VA 22313-1450

By hand: U. S. Patent and Trademark Office
Customer Service Window, Mail Stop Petitions
Randolph Building
401 Dulany Street
Alexandria, VA 22314

By FAX: (571) 273-8300

Telephone inquiries concerning this decision should be directed to the undersigned at 571-272-4231.

All other inquiries concerning either the examination or status of the application should be directed to the Technology Center.

The application is being forwarded to the Technology Center Art Unit 2144 for action in its regular turn.

Michelle R. Eason

Michelle R. Eason
Paralegal Specialist
Office of Petitions

UNITED STATES PATENT AND TRADEMARK OFFICE

Commissioner for Patents
United States Patent and Trademark Office
P.O. Box 1450
Alexandria, VA 22313-1450
www.uspto.gov

JOHN KENNETH AMICK
980 N.W. 49th WAY
COCONUT CREEK FL 33063

COPY MAILED

JUL 07 2008

OFFICE OF PETITIONS

In re Application of	:	
AMICK, John Kenneth	:	
Application No. 09/556,439	:	DECISION ON PETITION
Filed: April 24, 2000	:	TO MAKE SPECIAL UNDER
Attorney Docket No. **8006-0019-13**	:	37 CFR 1.102(c)(1)
	:	

This is a decision on the petition under 37 CFR 1.102(c)(1), filed June 13, 2008, to make the above-identified application special based on applicant's health as set forth in M.P.E.P. § 708.02, Section III.

The petition is **GRANTED.**

A grantable petition to make an application special under 37 CFR 1.102(c)(1) and MPEP § 708.02, Section III: Applicant's Health, must be accompanied by evidence showing such as a doctor's certificate or other medical certificate that the state of health of the applicant is such that he or she might not be available to assist in the prosecution of the application if it were to run its normal course. No fee is required

The instant petition includes a copy of the inventor's doctor's certificate attesting to John Kenneth Amick's health. Accordingly, the above-identified application has been accorded "special" status.

Telephone inquiries concerning this decision should be directed to Michelle R. Eason at 571-272-4231.

All other inquiries concerning either the examination or status of the application should be directed to the Technology Center.

The application is being forwarded to the Technology Center Art Unit 2124 for action on the merits commensurate with this decision.

Michelle R. Eason
Paralegal Specialist
Office of Petitions

UNITED STATES PATENT AND TRADEMARK OFFICE

COMMISSIONER FOR PATENTS
UNITED STATES PATENT AND TRADEMARK OFFICE
P.O. BOX 1450
ALEXANDRIA, VA 22313-1450
www.uspto.gov

JOHN KENNETH AMICK
980 N.W. 49th WAY
COCONUT CREEK FL 33063

COPY MAILED

JUL 0 7 2009

OFFICE OF PETITIONS

In re Application of
AMICK and KLEIMAN
Application No. 09/556,439
Filed: 04/24/2000
Title: VIRTUAL VOICE/COMPANY/OFFICE NETWORK TOOL KIT, METHOD, AND COMPUTER PROGRAM PRODUCT

DECISION ON PETITION

This is in response to the petition under 37 CFR 1.181, filed March 25, 2009, to withdraw the holding of abandonment in the above-identified application.

On November 13, 2008, the Office mailed a Notice of Allowance and Fee(s) Due, which set a three month statutory period to submit the issue fee. The application became abandoned on February 14, 2009. On March 9, 2009, the Office mailed a Notice of Abandonment.

In the present petition, petitioners request that the Office withdraw the holding of abandonment because they did not receive the Notice of Allowance at the correspondence address of record. Petitioners submitted a copy of their docket records and attested to the fact that a search of their records revealed that they did not receive the Notice of Allowance mailed on November 13, 2008.

A review of the record does not indicate any irregularity in the mailing of the Notice of Allowance and in the absence of any irregularity in the mailing, there is a strong presumption that the Notice was properly mailed to the address of record. If an allegation that an Office action was never received is adequately supported by an applicant on petition, the Office may grant the petition to withdraw the holding of abandonment and remail the Office action. Pursuant to MPEP 711.03(c)(I)(A), the showing required to establish nonreceipt of an Office communication **must include a statement describing the system used for recording an Office action received at the correspondence address of record with the USPTO. The statement should establish that the docketing system is sufficiently reliable**. The practitioner or pro se applicant must also state that the Office action was not received at the

correspondence address of record, and that a search of their records, including any file jacket or the equivalent, and the application contents, indicates that the Office action was not received. A copy of the record(s) used by the practitioner or pro se applicant where the non-received Office action would have been entered had it been received is required.

As petitioners are pro-se applicants, the Office understands that petitioners may not keep a formal docket record system for their correspondence with the USPTO. However, the submission of a copy of the docket record alone does not replace the requirement for a statement describing the system used for recording and tracking Office communications received at the correspondence address of record and showing that the system is sufficiently reliable. Thus, petitioners must provide an explanation of the manner in which they receive mail from the USPTO, maintain files for patent matters, and treat mail received for such matters. Specifically, petitioners must explain in detail their system for keeping track of patent matters - where petitioners keep the correspondence; where they write the due dates; how they know when replies are due, etc. In essence, petitioners must show how they remind themselves of response due dates and show that the due date for the Notice of Allowance was not entered into that system. Petitioner should include any available documentary evidence such as copies of any records or other methods, which could serve as a reminder of the due date for a response to an Office communication, and where petitioner would have entered the receipt date of the Office communication had petitioner received it (for example, a copy of the outside of a file or a calendar maintained by petitioner), if these documents are available.

In view of the above, the petition to withdraw the holding of abandonment is **dismissed**. A copy of the Notice of Allowance accompanies this decision for petitioners' convenience.

Any request for reconsideration of the dismissal of the petition to withdraw the holding of abandonment must be submitted within **TWO (2) MONTHS** from the mailing date of this decision and contain the signatures of both inventors. The request for reconsideration should include a cover letter entitled "Renewed Petition under 37 CFR 1.181 to Withdraw the Holding of Abandonment," as well as statements and documentary evidence, as indicate above, to demonstrate nonreceipt of the Notice of Allowance. Extensions of time are permitted under 37 CFR 1.136(a).

If petitioners are unable to provide the information requested above, petitioner may file a petition to revive the application pursuant to 37 CFR 1.137(b) on the basis of unintentional delay instead of filing a Renewed Petition under 37 CFR 1.181.

A grantable petition pursuant to 37 CFR 1.137(b) must be accompanied by:

(1) The reply required to the outstanding Notice of Allowance;

(2) The petition fee as set forth in § 1.17(m), currently a $810.00 fee for a small entity; and,

(3) A statement that the entire delay in filing the required reply from the due date for the reply until the filing of a grantable petition was unintentional. The Director may require additional information where there is a question whether the delay was unintentional.

The appropriate form for filing a petition under 37 CFR 1.137(b) is enclosed.

Further correspondence with respect to this matter should be addressed as follows:

By mail: Mail Stop Petition
Commissioner for Patents
P.O. Box 1450
Alexandria, VA 22313-1450

By FAX: (571) 273-8300
Attn: Office of Petitions

By hand: Customer Service Window
Randolph Building
401 Dulany Street
Alexandria, VA 22314

Correspondence may also be submitted electronically via EFS-Web.

Telephone inquiries related to this decision may be directed to the undersigned at (571) 272-3211.

C. T. Donnell

Christina Tartera Donnell
Senior Petitions Attorney
Office of Petitions

Enclosures: Copy of the Notice of Allowance and Form for Petition for Revival of an Application for Patent Abandoned Unintentionally under 37 CFR 1.137(b)

UNITED STATES PATENT AND TRADEMARK OFFICE

UNITED STATES DEPARTMENT OF COMMERCE
United States Patent and Trademark Office
Address: COMMISSIONER FOR PATENTS
P.O. Box 1450
Alexandria, Virginia 22313-1450
www.uspto.gov

NOTICE OF ALLOWANCE AND FEE(S) DUE

7590 11/13/2008

JOHN KENNETH AMICK
980 N.W. 49th WAY
COCONUT CREEK, FL 33063

EXAMINER
KANG, PAUL H

ART UNIT	PAPER NUMBER
2444	

DATE MAILED: 11/13/2008

APPLICATION NO.	FILING DATE	FIRST NAMED INVENTOR	ATTORNEY DOCKET NO.	CONFIRMATION NO.
09/556,439	04/24/2000	John Kenneth Amick	8006-0019-13	7593

TITLE OF INVENTION: VIRTUAL VOICE/COMPANY/OFFICE NETWORK TOOL KIT, METHOD, AND COMPUTER PROGRAM PRODUCT

APPLN. TYPE	SMALL ENTITY	ISSUE FEE DUE	PUBLICATION FEE DUE	PREV. PAID ISSUE FEE	TOTAL FEE(S) DUE	DATE DUE
nonprovisional	NO	$1510	$0	$0	$1510	02/13/2009

THE APPLICATION IDENTIFIED ABOVE HAS BEEN EXAMINED AND IS ALLOWED FOR ISSUANCE AS A PATENT. PROSECUTION ON THE MERITS IS CLOSED. THIS NOTICE OF ALLOWANCE IS NOT A GRANT OF PATENT RIGHTS. THIS APPLICATION IS SUBJECT TO WITHDRAWAL FROM ISSUE AT THE INITIATIVE OF THE OFFICE OR UPON PETITION BY THE APPLICANT. SEE 37 CFR 1.313 AND MPEP 1308.

THE ISSUE FEE AND PUBLICATION FEE (IF REQUIRED) MUST BE PAID WITHIN THREE MONTHS FROM THE MAILING DATE OF THIS NOTICE OR THIS APPLICATION SHALL BE REGARDED AS ABANDONED. THIS STATUTORY PERIOD CANNOT BE EXTENDED. SEE 35 U.S.C. 151. THE ISSUE FEE DUE INDICATED ABOVE DOES NOT REFLECT A CREDIT FOR ANY PREVIOUSLY PAID ISSUE FEE IN THIS APPLICATION. IF AN ISSUE FEE HAS PREVIOUSLY BEEN PAID IN THIS APPLICATION (AS SHOWN ABOVE), THE RETURN OF PART B OF THIS FORM WILL BE CONSIDERED A REQUEST TO REAPPLY THE PREVIOUSLY PAID ISSUE FEE TOWARD THE ISSUE FEE NOW DUE.

HOW TO REPLY TO THIS NOTICE:

I. Review the SMALL ENTITY status shown above.

If the SMALL ENTITY is shown as YES, verify your current SMALL ENTITY status:

A. If the status is the same, pay the TOTAL FEE(S) DUE shown above.

B. If the status above is to be removed, check box 5b on Part B - Fee(s) Transmittal and pay the PUBLICATION FEE (if required) and twice the amount of the ISSUE FEE shown above, or

If the SMALL ENTITY is shown as NO:

A. Pay TOTAL FEE(S) DUE shown above, or

B. If applicant claimed SMALL ENTITY status before, or is now claiming SMALL ENTITY status, check box 5a on Part B - Fee(s) Transmittal and pay the PUBLICATION FEE (if required) and 1/2 the ISSUE FEE shown above.

II. PART B - FEE(S) TRANSMITTAL, or its equivalent, must be completed and returned to the United States Patent and Trademark Office (USPTO) with your ISSUE FEE and PUBLICATION FEE (if required). If you are charging the fee(s) to your deposit account, section "4b" of Part B - Fee(s) Transmittal should be completed and an extra copy of the form should be submitted. If an equivalent of Part B is filed, a request to reapply a previously paid issue fee must be clearly made, and delays in processing may occur due to the difficulty in recognizing the paper as an equivalent of Part B.

III. All communications regarding this application must give the application number. Please direct all communications prior to issuance to Mail Stop ISSUE FEE unless advised to the contrary.

IMPORTANT REMINDER: Utility patents issuing on applications filed on or after Dec. 12, 1980 may require payment of maintenance fees. It is patentee's responsibility to ensure timely payment of maintenance fees when due.

PTOL-85 (Rev. 08/07) Approved for use through 08/31/2010.

PART B - FEE(S) TRANSMITTAL

Complete and send this form, together with applicable fee(s), to: Mail **Mail Stop ISSUE FEE**
Commissioner for Patents
P.O. Box 1450
Alexandria, Virginia 22313-1450
or Fax (571)-273-2885

INSTRUCTIONS: This form should be used for transmitting the ISSUE FEE and PUBLICATION FEE (if required). Blocks 1 through 5 should be completed where appropriate. All further correspondence including the Patent, advance orders and notification of maintenance fees will be mailed to the current correspondence address as indicated unless corrected below or directed otherwise in Block 1, by (a) specifying a new correspondence address; and/or (b) indicating a separate "FEE ADDRESS" for maintenance fee notifications.

CURRENT CORRESPONDENCE ADDRESS (Note: Use Block 1 for any change of address)

7590 11/13/2008

JOHN KENNETH AMICK
980 N.W. 49th WAY
COCONUT CREEK, FL 33063

Note: A certificate of mailing can only be used for domestic mailings of the Fee(s) Transmittal. This certificate cannot be used for any other accompanying papers. Each additional paper, such as an assignment or formal drawing, must have its own certificate of mailing or transmission.

Certificate of Mailing or Transmission

I hereby certify that this Fee(s) Transmittal is being deposited with the United States Postal Service with sufficient postage for first class mail in an envelope addressed to the Mail Stop ISSUE FEE address above, or being facsimile transmitted to the USPTO (571) 273-2885, on the date indicated below.

(Depositor's name)

(Signature)

(Date)

APPLICATION NO.	FILING DATE	FIRST NAMED INVENTOR	ATTORNEY DOCKET NO.	CONFIRMATION NO.
09/556,439	04/24/2000	John Kenneth Amick	8006-0019-13	7593

TITLE OF INVENTION: VIRTUAL VOICE/COMPANY/OFFICE NETWORK TOOL KIT, METHOD, AND COMPUTER PROGRAM PRODUCT

APPLN. TYPE	SMALL ENTITY	ISSUE FEE DUE	PUBLICATION FEE DUE	PREV. PAID ISSUE FEE	TOTAL FEE(S) DUE	DATE DUE
nonprovisional	NO	$1510	$0	$0	$1510	02/13/2009

EXAMINER	ART UNIT	CLASS-SUBCLASS
KANG, PAUL H	2444	709-227000

1. Change of correspondence address or indication of "Fee Address" (37 CFR 1.363).

❑ Change of correspondence address (or Change of Correspondence Address form PTO/SB/122) attached.

❑ "Fee Address" indication (or "Fee Address" Indication form PTO/SB/47; Rev 03-02 or more recent) attached. **Use of a Customer Number is required.**

2. For printing on the patent front page, list

(1) the names of up to 3 registered patent attorneys or agents OR, alternatively,

(2) the name of a single firm (having as a member a registered attorney or agent) and the names of up to 2 registered patent attorneys or agents. If no name is listed, no name will be printed.

1 _____

2 _____

3 _____

3. ASSIGNEE NAME AND RESIDENCE DATA TO BE PRINTED ON THE PATENT (print or type)

PLEASE NOTE: Unless an assignee is identified below, no assignee data will appear on the patent. If an assignee is identified below, the document has been filed for recordation as set forth in 37 CFR 3.11. Completion of this form is NOT a substitute for filing an assignment.

(A) NAME OF ASSIGNEE

(B) RESIDENCE: (CITY and STATE OR COUNTRY)

Please check the appropriate assignee category or categories (will not be printed on the patent) : ❑ Individual ❑ Corporation or other private group entity ❑ Government

4a. The following fee(s) are submitted:

❑ Issue Fee

❑ Publication Fee (No small entity discount permitted)

❑ Advance Order - # of Copies _____

4b. Payment of Fee(s): **(Please first reapply any previously paid issue fee shown above)**

❑ A check is enclosed.

❑ Payment by credit card. Form PTO-2038 is attached.

❑ The Director is hereby authorized to charge the required fee(s), any deficiency, or credit any overpayment, to Deposit Account Number _____ (enclose an extra copy of this form).

5. **Change in Entity Status** (from status indicated above)

❑ a. Applicant claims SMALL ENTITY status. See 37 CFR 1.27.

❑ b. Applicant is no longer claiming SMALL ENTITY status. See 37 CFR 1.27(g)(2).

NOTE: The Issue Fee and Publication Fee (if required) will not be accepted from anyone other than the applicant; a registered attorney or agent; or the assignee or other party in interest as shown by the records of the United States Patent and Trademark Office.

Authorized Signature _____ Date _____

Typed or printed name _____ Registration No. _____

This collection of information is required by 37 CFR 1.311. The information is required to obtain or retain a benefit by the public which is to file (and by the USPTO to process) an application. Confidentiality is governed by 35 U.S.C. 122 and 37 CFR 1.14. This collection is estimated to take 12 minutes to complete, including gathering, preparing, and submitting the completed application form to the USPTO. Time will vary depending upon the individual case. Any comments on the amount of time you require to complete this form and/or suggestions for reducing this burden, should be sent to the Chief Information Officer, U.S. Patent and Trademark Office, U.S. Department of Commerce, P.O. Box 1450, Alexandria, Virginia 22313-1450. DO NOT SEND FEES OR COMPLETED FORMS TO THIS ADDRESS. SEND TO: Commissioner for Patents, P.O. Box 1450, Alexandria, Virginia 22313-1450.

Under the Paperwork Reduction Act of 1995, no persons are required to respond to a collection of information unless it displays a valid OMB control number.

UNITED STATES PATENT AND TRADEMARK OFFICE

UNITED STATES DEPARTMENT OF COMMERCE
United States Patent and Trademark Office
Address: COMMISSIONER FOR PATENTS
P.O. Box 1450
Alexandria, Virginia 22313-1450
www.uspto.gov

APPLICATION NO.	FILING DATE	FIRST NAMED INVENTOR	ATTORNEY DOCKET NO.	CONFIRMATION NO.
09/556,439	04/24/2000	John Kenneth Amick	8006-0019-13	7593

7590 11/13/2008

JOHN KENNETH AMICK
980 N.W. 49th WAY
COCONUT CREEK, FL 33063

EXAMINER
KANG, PAUL H

ART UNIT	PAPER NUMBER
2444	

DATE MAILED: 11/13/2008

Determination of Patent Term Extension under 35 U.S.C. 154 (b)
(application filed after June 7, 1995 but prior to May 29, 2000)

The Patent Term Extension is 0 day(s). Any patent to issue from the above-identified application will include an indication of the 0 day extension on the front page.

If a Continued Prosecution Application (CPA) was filed in the above-identified application, the filing date that determines Patent Term Extension is the filing date of the most recent CPA.

Applicant will be able to obtain more detailed information by accessing the Patent Application Information Retrieval (PAIR) WEB site (http://pair.uspto.gov).

Any questions regarding the Patent Term Extension or Adjustment determination should be directed to the Office of Patent Legal Administration at (571)-272-7702. Questions relating to issue and publication fee payments should be directed to the Customer Service Center of the Office of Patent Publication at 1-(888)-786-0101 or (571)-272-4200.

PTOL-85 (Rev. 08/07) Approved for use through 08/31/2010.

Notice of Allowability	Application No.	Applicant(s)	
	09/556,439	AMICK, JOHN KENNETH	
	Examiner	Art Unit	
	Paul H. Kang	2144	

-- The MAILING DATE of this communication appears on the cover sheet with the correspondence address--

All claims being allowable, PROSECUTION ON THE MERITS IS (OR REMAINS) CLOSED in this application. If not included herewith (or previously mailed), a Notice of Allowance (PTOL-85) or other appropriate communication will be mailed in due course. **THIS NOTICE OF ALLOWABILITY IS NOT A GRANT OF PATENT RIGHTS.** This application is subject to withdrawal from issue at the initiative of the Office or upon petition by the applicant. See 37 CFR 1.313 and MPEP 1308.

1. ☒ This communication is responsive to *the amendment filed June 13, 2008*.

2. ☒ The allowed claim(s) is/are *32,34-60 and 62-82*.

3. ☐ Acknowledgment is made of a claim for foreign priority under 35 U.S.C. § 119(a)-(d) or (f).
   a) ☐ All b) ☐ Some* c) ☐ None of the:
      1. ☐ Certified copies of the priority documents have been received.
      2. ☐ Certified copies of the priority documents have been received in Application No. _____ .
      3. ☐ Copies of the certified copies of the priority documents have been received in this national stage application from the International Bureau (PCT Rule 17.2(a)).

   * Certified copies not received: _____.

Applicant has THREE MONTHS FROM THE "MAILING DATE" of this communication to file a reply complying with the requirements noted below. Failure to timely comply will result in ABANDONMENT of this application.
THIS THREE-MONTH PERIOD IS NOT EXTENDABLE.

4. ☐ A SUBSTITUTE OATH OR DECLARATION must be submitted. Note the attached EXAMINER'S AMENDMENT or NOTICE OF INFORMAL PATENT APPLICATION (PTO-152) which gives reason(s) why the oath or declaration is deficient.

5. ☐ CORRECTED DRAWINGS (as "replacement sheets") must be submitted.
   (a) ☐ including changes required by the Notice of Draftsperson's Patent Drawing Review (PTO-948) attached
      1) ☐ hereto or 2) ☐ to Paper No./Mail Date _____.
   (b) ☐ including changes required by the attached Examiner's Amendment / Comment or in the Office action of Paper No./Mail Date _____.

   Identifying indicia such as the application number (see 37 CFR 1.84(c)) should be written on the drawings in the front (not the back) of each sheet. Replacement sheet(s) should be labeled as such in the header according to 37 CFR 1.121(d).

6. ☐ DEPOSIT OF and/or INFORMATION about the deposit of BIOLOGICAL MATERIAL must be submitted. Note the attached Examiner's comment regarding REQUIREMENT FOR THE DEPOSIT OF BIOLOGICAL MATERIAL.

Attachment(s)

1. ☐ Notice of References Cited (PTO-892)
2. ☐ Notice of Draftperson's Patent Drawing Review (PTO-948)
3. ☐ Information Disclosure Statements (PTO/SB/08), Paper No./Mail Date _____
4. ☐ Examiner's Comment Regarding Requirement for Deposit of Biological Material
5. ☐ Notice of Informal Patent Application
6. ☐ Interview Summary (PTO-413), Paper No./Mail Date _____ .
7. ☒ Examiner's Amendment/Comment
8. ☐ Examiner's Statement of Reasons for Allowance
9. ☐ Other _____.

/Paul H Kang/
Primary Examiner
Art Unit: 2144

EXAMINER'S AMENDMENT

1. An examiner's amendment to the record appears below. Should the changes and/or additions be unacceptable to applicant, an amendment may be filed as provided by 37 CFR 1.312. To ensure consideration of such an amendment, it MUST be submitted no later than the payment of the issue fee.

Authorization for this examiner's amendment was given in a telephone interview with Mr. John Kenneth Amick on September 29, 2008.

2. The application has been amended as follows:

a. Cancel claims 33 and 61.

b. In claim 32, after "no answer condition;" (at the end of claim 32 on page 5, line 5 of the claims submitted June 13, 2008), insert:

"the configuring of step a) further comprises:

associating at least one numerical address of the at least one virtual network call processing system with the at least one second object, the at least one second object managing interactive communications between the at least one calling party and the at least one virtual network call processing system application during a called party no answer condition, the at least one second object having at least one menu of at least one choice to be selected by the at least one calling party;

the managing of step c) further comprises:

communicating the at least one menu of at least one choice to the at least one calling party at least during the called party no answer condition;

receiving the at least one selection from the at least one calling party upon selection by the at least one calling party;

the at least one virtual network call processing system application managing communications between the at least one calling party and the at least one virtual network call processing system application at least during the called party no answer condition, in accordance with at least one selection received from the at least one calling party."

c. In claim 60, after "no answer condition" (at the end of claim 60 on page 13, line 7 of the claims submitted June 13, 2008), insert:

"the configuring of step a) further comprises:

associating at least one numerical address of the at least one virtual network call processing system with the at least one second software construct, the at least one second software construct managing interactive communications between the at least one calling party and the at least one virtual network call processing system application during a called party no answer condition, the at least one second software construct having at least one menu of at least one choice to be selected by the at least one calling party;

the managing of step c) further comprises:

communicating the at least one menu of at least one choice to the at least one calling party at least during the called party no answer condition;

receiving the at least one selection from the at least one calling party upon selection by the at least one calling party;

the at least one virtual network call processing system application managing communications between the at least one calling party and the at least one virtual network call processing system application at least during the called party no answer condition, in accordance with at least one selection received from the at least one calling party."

d. In claim 35, line 1, replace "claim 33" with "claim 32".

e. In claim 44, line 1, replace "claim 33" with "claim 32".

f. In claim 51, line 1, replace "claim 33" with "claim 32".

g. In claim 52, line 1, replace "claim 33" with "claim 32".

h. In claim 53, line 1, replace "claim 33" with "claim 32".

Conclusion

3. Any inquiry concerning this communication or earlier communications from the examiner should be directed to Paul H. Kang whose telephone number is (571) 272-3882. The examiner can normally be reached on IFP.

If attempts to reach the examiner by telephone are unsuccessful, the examiner's supervisor, William Vaughn can be reached on (571) 272-3922. The fax phone number for the organization where this application or proceeding is assigned is 571-273-8300.

Information regarding the status of an application may be obtained from the Patent Application Information Retrieval (PAIR) system. Status information for published applications may be obtained from either Private PAIR or Public PAIR. Status information for unpublished applications is available through Private PAIR only. For more information about the PAIR system, see http://pair-direct.uspto.gov. Should you have questions on access to the Private PAIR system, contact the Electronic Business Center (EBC) at 866-217-9197 (toll-free). If you would like assistance from a USPTO Customer Service Representative or access to the automated information system, call 800-786-9199 (IN USA OR CANADA) or 571-272-1000.

/Paul H Kang/
Primary Examiner
Art Unit 2144

PTO/SB/64 (06-09)
Approved for use through 07/31/2009. OMB 0651-0031
U.S. Patent and Trademark Office; U.S. DEPARTMENT OF COMMERCE

Under the Paperwork Reduction Act of 1995, no persons are required to respond to a collection of information unless it displays a valid OMB control number.

PETITION FOR REVIVAL OF AN APPLICATION FOR PATENT ABANDONED UNINTENTIONALLY UNDER 37 CFR 1.137(b)

Docket Number (Optional)

First named inventor: _____

Application No.: _____ Art Unit: _____

Filed: _____ Examiner: _____

Title:

Attention: Office of Petitions
Mail Stop Petition
Commissioner for Patents
P.O. Box 1450
Alexandria, VA 22313-1450
FAX (571) 273-8300

NOTE: If information or assistance is needed in completing this form, please contact Petitions Information at (571) 272-3282.

The above-identified application became abandoned for failure to file a timely and proper reply to a notice or action by the United States Patent and Trademark Office. The date of abandonment is the day after the expiration date of the period set for reply in the office notice or action plus any extensions of time actually obtained.

APPLICANT HEREBY PETITIONS FOR REVIVAL OF THIS APPLICATION

NOTE: A grantable petition requires the following items:
(1) Petition fee;
(2) Reply and/or issue fee;
(3) Terminal disclaimer with disclaimer fee - required for all utility and plant applications filed before June 8, 1995; and for all design applications; and
(4) Statement that the entire delay was unintentional

1. Petition Fee

☐ Small entity-fee $ _____ (37 CFR 1.17(m)). Application claims small entity status. See 37 CFR 1.27.

☐ Other than small entity-fee $ _____ (37 CFR 1.17(m))

2. Reply and/or fee

A. The reply and/or fee to the above-noted Office action in the form of _____ (identify type of reply):

☐ has been filed previously on _____.

☐ is enclosed herewith.

B. The issue fee and publication fee (if applicable) of $ _____.

☐ has been paid previously on _____.

☐ is enclosed herewith.

This collection of information is required by 37 CFR 1.137(b). The information is required to obtain or retain a benefit by the public which is to file (and by the USPTO to process) an application. Confidentiality is governed by 35 U.S.C. 122 and 37 CFR 1.11 and 1.14. This collection is estimated to take 1.0 hour to complete, including gathering, preparing, and submitting the completed application form to the USPTO. Time will vary depending upon the individual case. Any comments on the amount of time you require to complete this form and/or suggestions for reducing this burden, should be sent to the Chief Information Officer, U.S. Patent and Trademark Office, U.S. Department of Commerce, P.O. Box 1450, Alexandria, VA 22313-1450. DO NOT SEND FEES OR COMPLETED FORMS TO THIS ADDRESS. **SEND TO: Mail Stop Petition, Commissioner for Patents, P.O. Box 1450, Alexandria, VA 22313-1450.**

If you need assistance in completing the form, call 1-800-PTO-9199 and select option 2.

Under the Paperwork Reduction Act of 1995, no persons are required to respond to a collection of information unless it displays a valid OMB control number

3. Terminal disclaimer with disclaimer fee

☐ Since this utility/plant application was filed on or after June 8, 1995, no terminal disclaimer is required.

☐ A terminal disclaimer (and disclaimer fee (37 CFR 1.20(d)) of $_____ for a small entity or $_____ for other than a small entity) disclaiming the required period of time is enclosed herewith (see PTO/SB/63).

4. STATEMENT: The entire delay in filing the required reply from the due date for the required reply until the filing of a grantable petition under 37 CFR 1.137(b) was unintentional. [NOTE: The United States Patent and Trademark Office may require additional information if there is a question as to whether either the abandonment or the delay in filing a petition under 37 CFR 1.137(b) was unintentional (MPEP 711.03(c), subsections (III)(C) and (D)).]

WARNING:

Petitioner/applicant is cautioned to avoid submitting personal information in documents filed in a patent application that may contribute to identity theft. Personal information such as social security numbers, bank account numbers, or credit card numbers (other than a check or credit card authorization form PTO-2038 submitted for payment purposes) is never required by the USPTO to support a petition or an application. If this type of personal information is included in documents submitted to the USPTO, petitioners/applicants should consider redacting such personal information from the documents before submitting them to the USPTO. Petitioner/applicant is advised that the record of a patent application is available to the public after publication of the application (unless a non-publication request in compliance with 37 CFR 1.213(a) is made in the application) or issuance of a patent. Furthermore, the record from an abandoned application may also be available to the public if the application is referenced in a published application or an issued patent (see 37 CFR 1.14). Checks and credit card authorization forms PTO-2038 submitted for payment purposes are not retained in the application file and therefore are not publicly available.

Signature	Date
Type or Printed name	Registration Number, If applicable
Address	Telephone Number
Address	

Enclosures:

☐ Fee Payment

☐ Reply

☐ Terminal Disclaimer Form

☐ Additional sheets containing statements establishing unintentional delay

☐ Other: _____

CERTIFICATE OF MAILING OR TRANSMISSION [37 CFR 1.8(a)]

I hereby certify that this correspondence is being:

☐ Deposited with the United States Postal Service on the date shown below with sufficient postage as first class mail in an envelope addressed to: Mail Stop Petition, Commissioner for Patents, P. O. Box 1450, Alexandria, VA 22313-1450.

☐ Transmitted by facsimile on the date shown below to the United States Patent and Trademark Office at (571) 273-8300.

Date	Signature
	Typed or printed name of person signing certificate

Privacy Act Statement

The **Privacy Act of 1974 (P.L. 93-579)** requires that you be given certain information in connection with your submission of the attached form related to a patent application or patent. Accordingly, pursuant to the requirements of the Act, please be advised that: (1) the general authority for the collection of this information is 35 U.S.C. 2(b)(2); (2) furnishing of the information solicited is voluntary; and (3) the principal purpose for which the information is used by the U.S. Patent and Trademark Office is to process and/or examine your submission related to a patent application or patent. If you do not furnish the requested information, the U.S. Patent and Trademark Office may not be able to process and/or examine your submission, which may result in termination of proceedings or abandonment of the application or expiration of the patent.

The information provided by you in this form will be subject to the following routine uses:

1. The information on this form will be treated confidentially to the extent allowed under the Freedom of Information Act (5 U.S.C. 552) and the Privacy Act (5 U.S.C. 552a). Records from this system of records may be disclosed to the Department of Justice to determine whether the Freedom of Information Act requires disclosure of these records.
2. A record from this system of records may be disclosed, as a routine use, in the course of presenting evidence to a court, magistrate, or administrative tribunal, including disclosures to opposing counsel in the course of settlement negotiations.
3. A record in this system of records may be disclosed, as a routine use, to a Member of Congress submitting a request involving an individual, to whom the record pertains, when the individual has requested assistance from the Member with respect to the subject matter of the record.
4. A record in this system of records may be disclosed, as a routine use, to a contractor of the Agency having need for the information in order to perform a contract. Recipients of information shall be required to comply with the requirements of the Privacy Act of 1974, as amended, pursuant to 5 U.S.C. 552a(m).
5. A record related to an International Application filed under the Patent Cooperation Treaty in this system of records may be disclosed, as a routine use, to the International Bureau of the World Intellectual Property Organization, pursuant to the Patent Cooperation Treaty.
6. A record in this system of records may be disclosed, as a routine use, to another federal agency for purposes of National Security review (35 U.S.C. 181) and for review pursuant to the Atomic Energy Act (42 U.S.C. 218(c)).
7. A record from this system of records may be disclosed, as a routine use, to the Administrator, General Services, or his/her designee, during an inspection of records conducted by GSA as part of that agency's responsibility to recommend improvements in records management practices and programs, under authority of 44 U.S.C. 2904 and 2906. Such disclosure shall be made in accordance with the GSA regulations governing inspection of records for this purpose, and any other relevant (i.e., GSA or Commerce) directive. Such disclosure shall not be used to make determinations about individuals.
8. A record from this system of records may be disclosed, as a routine use, to the public after either publication of the application pursuant to 35 U.S.C. 122(b) or issuance of a patent pursuant to 35 U.S.C. 151. Further, a record may be disclosed, subject to the limitations of 37 CFR 1.14, as a routine use, to the public if the record was filed in an application which became abandoned or in which the proceedings were terminated and which application is referenced by either a published application, an application open to public inspections or an issued patent.
9. A record from this system of records may be disclosed, as a routine use, to a Federal, State, or local law enforcement agency, if the USPTO becomes aware of a violation or potential violation of law or regulation.

UNITED STATES PATENT AND TRADEMARK OFFICE

Commissioner for Patents
United States Patent and Trademark Office
P.O. Box 1450
Alexandria, VA 22313-1450
www.uspto.gov

JOHN KENNETH AMICK
980 N.W. 49th WAY
COCONUT CREEK FL 33063

COPY MAILED

NOV 0 3 2009

OFFICE OF PETITIONS

In re Application of :
AMICK and KLEIMAN :
Application No. 09/556,439 : DECISION ON PETITION
Filed: 04/24/2000 :
Title: VIRTUAL :
VOICE/COMPANY/OFFICE NETWORK :
TOOL KIT, METHOD, AND COMPUTER :
PROGRAM PRODUCT :

This is in response to the renewed petition under 37 CFR 1.181, filed September 1, 2009, to withdraw the holding of abandonment in the above-identified application.

The renewed petition under 37 CFR 1.181 is granted.

On November 13, 2008, the Office mailed a Notice of Allowance and Fee(s) Due, which set a three month statutory period to submit the issue fee. The application became abandoned on February 14, 2009. On March 9, 2009, the Office mailed a Notice of Abandonment.

In the present petition, petitioners request that the Office withdraw the holding of abandonment because they did not receive the Notice of Allowance at the correspondence address of record.

A review of the written record indicates no irregularity in the mailing of the Notice of Allowance and in the absence of any irregularity, there is a strong presumption that the Notice was properly mailed to the practitioner at the address of record. This presumption may be overcome by a showing that the Notice was not in fact received.

As stated in Section 711.03(c)(I)(A) of the Manual for Patent Examining Procedure:

> In Delgar v. Schulyer, 172 USPQ 513 (D.D.C. 1971), the court decided that the Office should mail a new Notice of Allowance in view of the evidence presented in support of the

contention that the applicant's representative did not receive the original Notice of Allowance. Under the reasoning of Delgar, an allegation that an Office action was never received may be considered in a petition to withdraw the holding of abandonment. If adequately supported, the Office may grant the petition to withdraw the holding of abandonment and remail the Office action. That is, the reasoning of Delgar is applicable regardless of whether an application is held abandoned for failure to timely pay the issue fee (35 U.S.C. 151) or for failure to prosecute (35 U.S.C. 133).

To minimize costs and burdens to practitioners and the Office, the Office has modified the showing required to establish nonreceipt of an Office action. The showing required to establish nonreceipt of an Office communication must include a statement from the practitioner describing the system used for recording an Office action received at the correspondence address of record with the USPTO. The statement should establish that the docketing system is sufficiently reliable. It is expected that the record would include, but not be limited to, the application number, attorney docket number, the mail date of the Office action and the due date for the response.

Practitioner must state that the Office action was not received at the correspondence address of record, and that a search of the practitioner's record(s), including any file jacket or the equivalent, and the application contents, indicates that the Office action was not received. A copy of the record(s) used by the practitioner where the non-received Office action would have been entered had it been received is required.

A copy of the practitioner's record(s) required to show non-receipt of the Office action should include the master docket for the firm. That is, if a three month period for reply was set in the nonreceived Office action, a copy of the master docket report showing all replies docketed for a date three months from the mail date of the nonreceived Office action must be submitted as documentary proof of nonreceipt of the Office action. If no such master docket exists, the practitioner should so state and provide other evidence such as, but not limited to, the following: the application file jacket; incoming mail log; calendar; reminder system; or the individual docket record for the application in question.

The showing outlined above may not be sufficient if there are circumstances that point to a conclusion that the Office action may have been lost after receipt rather than a conclusion that the Office action was lost in the mail (e.g., if the practitioner has a history of not receiving Office actions).

After reviewing the documents submitted on petition, the Office concludes that the showing of record is sufficient to warrant withdrawal of the holding of abandonment. Petitioners submitted copies of the file folder and docket records retained by Mr. Amick and Ms. Kleinman where the Notice of Allowance would have been entered had it been received and docketed. Additionally, petitioners attested to the fact that a search of the records indicated that the Notice of Allowance was not received.

In view of the above, the holding of abandonment is withdrawn and the application is restored to pending status. No petition fee is required.

Technology Center Art Unit 2444 has been advised of this decision. The matter is being referred to the Technology Center's technical support staff for re-mailing of the Notice of Allowance. The three (3) month statutory period for responding to the Notice of Allowance will be set to run from the re-mailing date of the Notice.

Telephone inquiries regarding this decision may be directed to the undersigned at (571) 272-3211.

C. T. Donnell

Christina Tartera Donnell
Senior Petitions Attorney
Office of Petitions

M.L

UNITED STATES PATENT AND TRADEMARK OFFICE

UNITED STATES DEPARTMENT OF COMMERCE
United States Patent and Trademark Office
Address: COMMISSIONER FOR PATENTS
P.O. Box 1450
Alexandria, Virginia 22313-1450
www.uspto.gov

APPLICATION NO.	FILING DATE	FIRST NAMED INVENTOR	ATTORNEY DOCKET NO.	CONFIRMATION NO.
09/556,503	04/24/2000	Charles J. Burnett	10991754-1	7659

22878 7590 11/13/2006

AGILENT TECHNOLOGIES INC.
INTELLECTUAL PROPERTY ADMINISTRATION, M/S DU404
P.O. BOX 7599
LOVELAND, CO 80537-0599

EXAMINER
TAYLOR, BARRY W

ART UNIT	PAPER NUMBER
2617	

DATE MAILED: 11/13/2006

Please find below and/or attached an Office communication concerning this application or proceeding.

UNITED STATES DEPARTMENT OF COMMERCE
U.S. Patent and Trademark Office
Address: COMMISSIONER FOR PATENTS
P.O. Box 1450
Alexandria, Virginia 22313-1450

APPLICATION NO./ CONTROL NO.	FILING DATE	FIRST NAMED INVENTOR / PATENT IN REEXAMINATION	ATTORNEY DOCKET NO.
09/556 503			

EXAMINER

ART UNIT	PAPER

20061103

DATE MAILED:

Please find below and/or attached an Office communication concerning this application or proceeding.

Commissioner for Patents

Please find attached a copy of the request for a certificate of correction that has been approved. Also note that the request for Supplemental Notice of Allowance has been denied since the PTO-1449 filed August 24, 2000 has already been considered and initialed by the Examiner (please see paper dated 8/16/2005).

BARRY TAYLOR
PRIMARY EXAMINER

PTO/SB/44 (04-05)
Approved for use through 04/30/2007. OMB 0651-0033
U.S. Patent and Trademark Office; U.S. DEPARTMENT OF COMMERCE
Under the Paperwork Reduction Act of 1995, no persons are required to respond to a collection of information unless it displays a valid OMB control number.
(Also Form PTO-1050)

UNITED STATES PATENT AND TRADEMARK OFFICE
CERTIFICATE OF CORRECTION

PATENT NO. : 7,068,757

APPLICATION NO.: 09/556,503

ISSUE DATE : June 27, 2006

INVENTOR(S) : Burnett

It is certified that an error appears or errors appear in the above-identified patent and that said Letters Patent is hereby corrected as shown below:

On the face page, in field (56), under "U.S. Patent Documents", in column 2, line 1, after "Lam" insert - - ~~375/222~~ 379/22 - -.

On the face page, in field (56), under "Foreign Patent Documents", in column 2, line 1, delete "EP 144072 B1" and insert - - EP0144072 B1 - -, therefor.

On the face page, in field (56), under "Foreign Patent Documents", in column 2, line 1, after "11/1984" insert - - H04M 3/24 - -.

On the face page, in field (56), under "Foreign Patent Documents", in column 2, line 2, delete "EP 881855 A2" and insert - - EP0881855 A2 - -, therefor.

On the face page, in field (56), under "Foreign Patent Documents", in column 2, line 2, after "12/1998" insert - - H04Q 11/04 - -.

MAILING ADDRESS OF SENDER (Please do not use customer number below):
Agilent Technologies

This collection of information is required by 37 CFR 1.322, 1.323, and 1.324. The information is required to obtain or retain a benefit by the public which is to file (and by the USPTO to process) an application. Confidentiality is governed by 35 U.S.C. 122 and 37 CFR 1.14. This collection is estimated to take 1.0 hour to complete, including gathering, preparing, and submitting the completed application form to the USPTO. Time will vary depending upon the individual case. Any comments on the amount of time you require to complete this form and/or suggestions for reducing this burden, should be sent to the Chief Information Officer, U.S. Patent and Trademark Office, U.S. Department of Commerce, P.O. Box 1450, Alexandria, VA 22313-1450. DO NOT SEND FEES OR COMPLETED FORMS TO THIS ADDRESS. **SEND TO: Attention Certificate of Corrections Branch, Commissioner for Patents, P.O. Box 1450, Alexandria, VA 22313-1450.**

If you need assistance in completing the form, call 1-800-PTO-9199 and select option 2.

SEP 1 8 2006

SPE RESPONSE FOR CERTIFICATE OF CORRECTION

Paper No.: _____

DATE : October 13, 2006

TO SPE OF : ART UNIT 2617

SUBJECT : Request for Certificate of Correction for Appl. No.: 09/556503 Patent No.: 7,068,757 B1

Please respond to this request for a certificate of correction within 7 days.

Please review the requested changes/corrections as shown in the **COCIN** document(s) in the IFW application image. No new matter should be introduced, nor should the scope or meaning of the claims be changed.

Please complete the response (see below) and forward the completed response to scanning using document code **COCX**.

Elisha Evans

Certificates of Correction Branch

703-308-9390 ext. 110

Thank You For Your Assistance

The request for issuing the above-identified correction(s) is hereby:

Note your decision on the appropriate box.

- ☑ **Approved** — **All** changes apply.
- ☐ **Approved in Part** — Specify below which changes **do not** apply.
- ☐ **Denied** — State the reasons for denial below.

Comments: The first request relating to "U.S. Patent Documents," in column 2, line 1, after "LAM" should read as "379/22" instead of "375/222" as currently proposed.

WILLIAM TROST
SUPERVISORY PATENT EXAMINER
TECHNOLOGY CENTER 2600
SPE

2617
Art Unit

UNITED STATES PATENT AND TRADEMARK OFFICE

Commissioner for Patents
United States Patent and Trademark Office
Washington, D.C. 20231
www.uspto.gov

Paper No. 8

Thomas R. Morrison
Morrison Law Firm
145 North Fifth Avenue
Mt. Vernon, NY 10550

COPY MAILED

MAY 23 2002

OFFICE OF PETITIONS

In re Application of
Toru Kihara, et. al.
Application No. 09/556,536
Filed: April 24, 2000
Attorney Docket No. M1866-25

ON PETITION

This is a decision on the petition under 37 CFR 1.137(b), filed April 29, 2002, to revive the above-identified application.

The petition is **GRANTED**.

The above-identified application became abandoned for failure to reply in a timely manner to the non-final Office action mailed June 29, 2001, which set a shortened statutory period for reply of three (3) months. No extensions of time under the provisions of 37 CFR 1.136(a) were obtained. Accordingly, the above-identified application became abandoned after midnight September 29, 2001.

The application is being forwarded to Technology Center 1700.

Telephone inquiries concerning this decision should be directed to Andrea Coram at (703) 308-6711.

Andrea Coram
Petitions Examiner
Office of Petitions
Office of the Deputy Commissioner
for Patent Examination Policy

UNITED STATES PATENT AND TRADEMARK OFFICE

COMMISSIONER FOR PATENTS
UNITED STATES PATENT AND TRADEMARK OFFICE
P.O. BOX 1450
ALEXANDRIA, VA 22313-1450
www.uspto.gov

MAILED

OCT 03 2003

DIRECTOR'S OFFICE
TECHNOLOGY CENTER 3600

Francis L. Conte
NCR Corporation
Law Department, WHQ-5E
1700 S. Patterson Blvd.
Dayton, OH 45479-0001

Paper No. 17

In re Application of	:	
Mitchell Bauer	:	PETITION TO WITHDRAW
Application No. 09/556,647	:	RESTRICTION
Filed: April 24, 2000	:	
Attorney Docket No.: 8778.00	:	37 C.F.R. 1.144
For: MATERIAL BROWSER	:	

This is in response to applicant's Petition filed on July 23, 2003 to have the Restriction Requirement in the Office action dated December 17, 2002 withdrawn.

The petition is **GRANTED-IN-PART**.

Petitioner argues that the original restriction requirement made by the examiner is improper and sets forth a detailed explanation in their petition as to why the restriction requirement should be withdrawn. With respect to the Group I and II inventions, petitioner argues that claims 1 and 8 clearly show substantial similarity between the method and the corresponding apparatus claims.

An analysis of the restriction requirement and the currently pending claims indicates that restriction between these two groups of inventions was proper but for a different rationale. In this particular case the method of Group I could have been practiced by a materially different apparatus other than that of Group II. Specifically, the method could be performed with an apparatus that does not require that the processor be used to query the users for input but where the data is collected by a person on a telephone querying a user and then keying the data into the processor.

Accordingly, the restriction requirement between Groups I and II is considered proper.

With respect to the restriction requirement between Groups I and III, petitioner argues that the two sets of claims are not subcombination claims but are both combination claims and as such the restriction is not proper.

An analysis of the restriction requirement between Groups I and III and the currently pending claims indicates that the restriction on the basis of subcombinations useable

together in a single combination made by the examiner was proper. Specifically Group I is directed to gathering a user's input and then making a material selection based on the input, and is a sales tool. Group III, on the other hand, is drawn to selecting a material for manufacturing a product and operates on already stored data in order to make selections, which would have applicability as a research tool for a manufacturing company.

Accordingly, the restriction requirement between Groups I and III is considered proper.

With respect to the restriction requirement between Groups I and IV, petitioner argues that the examiner has failed to interpret the claims properly since the claims have been treated as if in a technical vacuum without due regard to the sophisticated functions thereof effected in a computer system.

An analysis of the restriction requirement between Groups I and IV and the currently pending claims indicates that the restriction was made on the basis of a process and an apparatus for its practice and was proper but for a different rationale. In this particular case it is seen that the process could be practiced by a materially different apparatus. For example, the process requires a querying of the user in order to input data while the apparatus has stored data, which could have been loaded by other means.

Accordingly, the restriction requirement between Groups I and IV is considered proper.

With respect to the restriction requirement between Groups II and III, petitioner argues that the grouping of claims is clearly erroneous and lacks technical credibility.

An analysis of the restriction requirement between Groups II and III and the currently pending claims indicates that the restriction was based on a process and an apparatus for its practice and was proper but for a different rationale. Specifically the process of Group III deals with a manufacturing process, which selects a material while the system of Group II requires the querying of the users for data input. Clearly the process of Group III could be used without querying of the users as required by Group II.

Accordingly, the restriction requirement between Groups II and III is considered proper.

With respect to the restriction requirement between Groups II and IV, petitioner argues that restriction is in error since both sets of claims are directed to combination claims.

An analysis of the restriction requirement between Groups II and IV and the currently pending claims indicates that the restriction on the basis of combination and subcombination was not proper, but instead the restriction should have been on the basis of subcombinations useable together in a single combination for the same reasons as set forth in the distinction betweens Groups I and III, set forth above.

Accordingly, the restriction requirement between Groups II and IV is considered proper.

With respect to the restriction requirement between Groups III and IV, petitioner argues that apparatus claim 22 is the means-for equivalent of method claim 15 and that the two groups of inventions should be examined together.

An analysis of the restriction requirement between groups III and IV and the currently pending claims indicates that the maintaining of the restriction requirement in light of the claims as amended was improper.

Accordingly, the restriction requirement between Groups III and IV is hereby withdrawn.

As such, the distinct Groups of inventions are considered to be Group I (claims 1-7), Group II (claims 8-14), and Group III (claims 15-22 and 31-39). Group III being the combination of originally indicated Groups III and IV. Since applicant previously elected Group IV and the above analysis has indicated that Group III was not properly restrictable from Group IV the application will be forwarded to the examiner for the preparation of a supplemental Office action with a treatment of the Group III claims on the merits.

Summary: ***Petition Granted-In-Part***

John J. Love

John J. Love, Director
Patent Technology Center 3600
(703) 308-1020

RPO 9/30/03

UNITED STATES PATENT AND TRADEMARK OFFICE

COMMISSIONER FOR PATENTS
UNITED STATES PATENT AND TRADEMARK OFFICE
P.O. BOX 1450
ALEXANDRIA, VA 22313-1450
www.uspto.gov

MAILED

APR 28 2004

DIRECTOR'S OFFICE
TECHNOLOGY CENTER 3600

Douglas S. Foote
NCR Corporation
1700 S. Patterson Blvd. WHQ5E
Dayton, OH 45479

In re Application of: Mitchell R. Bauer	:	PETITION TO WITHDRAW
Application No. 09/556,647	:	OBJECTIONS TO THE
Filed: April 24, 2000	:	SPECIFICATION AND
Attorney Docket No.: 8778.00	:	DRAWINGS UNDER
For: MATERIAL BROWSER	:	37 C.F.R. 1.181

This is in response to applicant's petition filed on December 19, 2003 to have the objections to the specification set forth in the October 22, 2003 Office action withdrawn and to have the proposed drawing corrections filed on January 14, 2003 approved.

The petition is **GRANTED-IN-PART**.

Petitioner argues that in the Office actions dates June 6, 2003 and October 22, 2003 the examiner objected to the specification as failing to provide proper antecedent basis with respect to several "means plus function" clauses. Further, petitioner urges that the identified "means plus function" clauses are adequately described in the specification and that verbatim antecedent support in the specification is indicated in the amendment dated October 21, 2002 and that the "means" words find implicit support in the specification in accordance with Section 112, para. 6. The petition also urges that the proposed drawing correction filed on January 14, 2003 be acknowledged by the Office and approved.

A review of the file history indicates that the examiner in both the June 6, 2003 and October 22, 2003 Office actions objected to the specification as failing to provide antecedent basis for several of the "means plus function" clauses set forth in claim 22. MPEP Section 2181 is very clear on the handling of proper antecedent basis for terms used in the specification and states "In the situation in which the written description only implicitly or inherently sets forth the structure, materials, or acts corresponding to a means-(or step-) plus-function, and the examiner concludes that one skilled in the art would recognize what structure, materials or acts perform the function recited in a means-(or step-) plus-function, the examiner should either: (A) have the applicant clarify the record by amending the written description such that it expressly recites what structure, materials, or acts perform the function recited in the claim element; or (B)

state on the record what structure, materials, or acts perform the function recited in the means- (or step-) plus-function limitation. Even if the disclosure implicitly sets forth the structure, materials, or acts corresponding to a means- (or step-) plus-function claim element in compliance with 35 U.S.C. 112, first and second paragraphs, the USPTO may still require the applicant to amend the specification pursuant to 37 CFR 1.75(d) and MPEP 608.01(o) to explicitly state, with reference to the terms and phrases of the claim element, what structure, materials, or acts perform the function recited in the claim element." Since applicant has not pointed to any portion of the specification that shows specifically what structure is used to store the list of raw materials in the computer, exactly what structure is used for populating a plurality of filter lists, exactly what structure is used for displaying a material browser including the filters, exactly what structure is used for selecting one of the filters, or exactly what structure is used for filtering the list of raw materials the objection to the specification set forth by the examiner is considered proper.

Accordingly the petition to have the objections to the specification withdrawn is denied.

With respect to the proposed drawing corrections filed on January 14, 2003, the indication that these corrections were acceptable and overcame the drawing objections was inadvertently omitted from the Office actions.

Accordingly, the petition to have the proposed drawing corrections accepted is granted.

The petition to withdraw the specification objections is denied and applicant must make the necessary amendments to the specification to correct the deficiencies. The petition to accept the drawing corrections is granted and applicant should submit formal copies of the proposed drawing corrections. This application will be forwarded to the examiner for action on the Appeal Brief filed on December 22, 2003.

Summary: ***Petition Granted in Part***

John J. Love, Director
Patent Technology Center 3600
(703) 308-1020

JJL:rpo: 02/26/04

UNITED STATES PATENT AND TRADEMARK OFFICE

Commissioner for Patents
United States Patent and Trademark Office
P.O. Box 1450
Alexandria, VA 22313-1450
www.uspto.gov

DOUGLAS S. FOOTE
NCR CORPORATION
1700 S. PATTERSON BLVD. WHQ5E
WHO-5E
DAYTON OH 45479

COPY MAILED

SEP 17 2007

OFFICE OF PETITIONS

In re Application of	:	
Mitchell R. Bauer	:	
Application No. 09/556,647	:	DECISION GRANTING PETITION
Filed: April 24, 2000	:	UNDER 37 CFR 1.137(b)
Attorney Docket No. 8778.00	:	

This is a decision on the petition under 37 CFR 1.137(b), filed April 9, 2007, to revive the above-identified application.

The petition is **GRANTED**.

The petition satisfies the conditions for revival pursuant to the provisions of 37 CFR 1.137(b) in that (1) the reply in the form of an RCE and an amendment; (2) the petition fee; and (3) the required statement of unintentional delay have been received. Accordingly, the reply of April 9, 2007, is accepted as having been unintentionally delayed.

Telephone inquiries concerning this decision should be directed to the undersigned at (571) 272-3208.

This matter is being referred to Technology Center AU 3621.

Karen Creasy

Karen Creasy
Petitions Examiner
Office of Petitions

UNITED STATES PATENT AND TRADEMARK OFFICE

Commissioner for Patents
United States Patent and Trademark Office
P.O. Box 1450
Alexandria, VA 22313-1450
www.uspto.gov

MACPHERSON KWOK CHEN & HEID LLP
2033 GATEWAY PLACE
SUITE 400
SAN JOSE CA 95110

COPY MAILED

AUG 30 2007

OFFICE OF PETITIONS

In re Application of	:	
Seong-Hwan MOON et al.	:	
Application No. 09/556,779	:	DECISION ON PETITION
Filed: April 25, 2000	:	
Attorney Docket No. AB-1600 US	:	

This is a decision on the petition under the unintentional provisions of 37 CFR 1.137(b), filed March 02, 2007, to revive the above-identified application.

The petition is **DISMISSED**.

Any request for reconsideration of this decision must be submitted within TWO (2) MONTHS from the mail date of this decision. Extensions of time under 37 CFR 1.136(a) are permitted. The reconsideration request should include a cover letter entitled "Renewed Petition under 37 CFR 1.137(b)." This is **not** a final agency action within the meaning of 5 U.S.C. § 704.

A grantable petition under 37 CFR 1.137(b) must be accompanied by: (1) the required reply, unless previously filed; (2) the petition fee as set forth in 37 CFR 1.17(m); (3) a statement that the entire delay in filing the required reply from the due date for the reply until the filing of a grantable petition pursuant to 37 CFR 1.137(b) was unintentional; and (4) any terminal disclaimer (and fee as set forth in 37 CFR 1.20(d)) required by 37 CFR 1.137(d). Where there is a question as to whether either the abandonment or the delay in filing a petition under 37 CFR 1.137 was unintentional, the Director may require additional information. See MPEP 711.03(c)(II)(C) and (D). The instant petition lacks item (1). Petitioner failed to provide a proper response to the office action.

The application became abandoned for failure to timely file a reply within the meaning of 37 CFR 1.113 to the final Office action of December 14, 2005. The proposed reply required for consideration of a petition to revive must be a Notice of Appeal (and appeal fee required by 37 CFR 41.20(b)(2)), an amendment that *prima facie* places the application in condition for allowance, a Request for Continued Examination (RCE) and submission (37 CFR 1.114), or the filing of a continuing application under 37 CFR 1.53(b). *See* MPEP 711.03(c)(II)(A)(2). Since the amendment submitted does not *prima facie* place the application in condition for allowance, the reply required must be a Notice of Appeal (and appeal fee), RCE, or the filing of a continuing application under 37 CFR 1.53(b). See attached courtesy copy of examiner's advisory action.

Further correspondence with respect to this matter should be addressed as follows:

By Mail: Mail Stop PETITION
Commissioner for Patents
P. O. Box 1450
Alexandria, VA 22313-1450

By hand: U. S. Patent and Trademark Office
Customer Service Window, Mail Stop Petitions
Randolph Building
401 Dulany Street
Alexandria, VA 22314

The centralized facsimile number is **(571) 273-8300.**

Telephone inquiries concerning this decision should be directed to Michelle R. Eason at (571) 272-4231.

David A. Bucci
Petitions Examiner
Office of Petitions

Attachment: Courtesy copy of examiners Advisory Action

Advisory Action Before the Filing of an Appeal Brief	Application No. 09/556,779	Applicant(s) MOON ET AL.	
	Examiner Srilakshmi K. Kumar	Art Unit 2629	

--The MAILING DATE of this communication appears on the cover sheet with the correspondence address --

THE REPLY FILED 02 March 2007 FAILS TO PLACE THIS APPLICATION IN CONDITION FOR ALLOWANCE.

1. ☒ The reply was filed after a final rejection, but prior to or on the same day as filing a Notice of Appeal. To avoid abandonment of this application, applicant must timely file one of the following replies: (1) an amendment, affidavit or other evidence, which places the application in condition for allowance; (2) a Notice of Appeal (with appeal fee) in compliance with 37 CFR 41.31; or (3) a Request for Continued Examination (RCE) in compliance with 37 CFR 1.114. The reply must be filed within one of the following time periods:
   a) ☒ The period for reply expires 6 months from the mailing date of the final rejection.
   b) ☐ The period for reply expires on: (1) the mailing date of this Advisory Action, or (2) the date set forth in the final rejection, whichever is later. In no event, however, will the statutory period for reply expire later than SIX MONTHS from the mailing date of the final rejection.
   Examiner Note: If box 1 is checked, check either box (a) or (b). ONLY CHECK BOX (b) WHEN THE FIRST REPLY WAS FILED WITHIN TWO MONTHS OF THE FINAL REJECTION. See MPEP 706.07(f).

Extensions of time may be obtained under 37 CFR 1.136(a). The date on which the petition under 37 CFR 1.136(a) and the appropriate extension fee have been filed is the date for purposes of determining the period of extension and the corresponding amount of the fee. The appropriate extension fee under 37 CFR 1.17(a) is calculated from: (1) the expiration date of the shortened statutory period for reply originally set in the final Office action; or (2) as set forth in (b) above, if checked. Any reply received by the Office later than three months after the mailing date of the final rejection, even if timely filed, may reduce any earned patent term adjustment. See 37 CFR 1.704(b).

NOTICE OF APPEAL

2. ☐ The Notice of Appeal was filed on _____. A brief in compliance with 37 CFR 41.37 must be filed within two months of the date of filing the Notice of Appeal (37 CFR 41.37(a)), or any extension thereof (37 CFR 41.37(e)), to avoid dismissal of the appeal. Since a Notice of Appeal has been filed, any reply must be filed within the time period set forth in 37 CFR 41.37(a).

AMENDMENTS

3. ☐ The proposed amendment(s) filed after a final rejection, but prior to the date of filing a brief, will not be entered because
   (a) ☐ They raise new issues that would require further consideration and/or search (see NOTE below);
   (b) ☐ They raise the issue of new matter (see NOTE below);
   (c) ☐ They are not deemed to place the application in better form for appeal by materially reducing or simplifying the issues for appeal; and/or
   (d) ☐ They present additional claims without canceling a corresponding number of finally rejected claims.
   NOTE: _____. (See 37 CFR 1.116 and 41.33(a)).
4. ☐ The amendments are not in compliance with 37 CFR 1.121. See attached Notice of Non-Compliant Amendment (PTOL-324).
5. ☒ Applicant's reply has overcome the following rejection(s): See Continuation Sheet.
6. ☐ Newly proposed or amended claim(s) _____ would be allowable if submitted in a separate, timely filed amendment canceling the non-allowable claim(s).
7. ☐ For purposes of appeal, the proposed amendment(s): a) ☐ will not be entered, or b) ☐ will be entered and an explanation of how the new or amended claims would be rejected is provided below or appended.
   The status of the claim(s) is (or will be) as follows:
   Claim(s) allowed: _____.
   Claim(s) objected to: _____.
   Claim(s) rejected: _____.
   Claim(s) withdrawn from consideration: _____.

AFFIDAVIT OR OTHER EVIDENCE

8. ☐ The affidavit or other evidence filed after a final action, but before or on the date of filing a Notice of Appeal will not be entered because applicant failed to provide a showing of good and sufficient reasons why the affidavit or other evidence is necessary and was not earlier presented. See 37 CFR 1.116(e).
9. ☐ The affidavit or other evidence filed after the date of filing a Notice of Appeal, but prior to the date of filing a brief, will not be entered because the affidavit or other evidence failed to overcome all rejections under appeal and/or appellant fails to provide a showing a good and sufficient reasons why it is necessary and was not earlier presented. See 37 CFR 41.33(d)(1).
10. ☐ The affidavit or other evidence is entered. An explanation of the status of the claims after entry is below or attached.

REQUEST FOR RECONSIDERATION/OTHER

11. ☒ The request for reconsideration has been considered but does NOT place the application in condition for allowance because: See Continuation Sheet.
12. ☐ Note the attached Information Disclosure Statement(s). (PTO/SB/08) Paper No(s). _____
13. ☐ Other: _____.

RICHARD LUEPE
SUPERVISORY PATENT EXAMINER
TECHNOLOGY CENTER 2600

PAGE 2/3 * RCVD AT 8/16/2007 11:20:25 AM [Eastern Daylight Time] * SVR:USPTO-EFXRF-2/4 * DNIS:2734231 * CSID: * DURATION (mm-ss):01-44

Continuation Sheet (PTO-303) **Application No. 09/556,779**

Continuation of 5. Applicant's reply has overcome the following rejection(s): 35 USC 112, first paragraph, as failing to comply with the written description requirement.

Continuation of 11. does NOT place the application in condition for allowance because: With respect to the 35 USC 112, first paragraph rejection, with the proposed amendment, applicant will overcome only this rejection. With respect to applicant's arguments in regards to where the prior art of Kinoshita and Yamazaki are not combinable, examiner, respectfully, disagrees. The combination is proper as the prior art Yamazaki enables a first image signal and a second image signal to be simultaneously outputted and further, reduces power consumption. Therefore the 35 USC 103 rejection is maintained.

PAGE 3/3 * RCVD AT 8/16/2007 11:20:25 AM [Eastern Daylight Time] * SVR:USPTO-EFXRF-2/4 * DNIS:2734231 * CSID: * DURATION (mm-ss):01-44

UNITED STATES PATENT AND TRADEMARK OFFICE

Commissioner for Patents
United States Patent and Trademark Office
P.O. Box 1450
Alexandria, VA 22313-1450
www.uspto.gov

MACPHERSON KWOK CHEN & HEID LLP
2033 GATEWAY PLACE
SUITE 400
SAN JOSE, CA 95110

COPY MAILED

MAR 0 7 2008

OFFICE OF PETITIONS

In re Application of	:	
Seong-Hwan MOON et al.	:	
Application No. 09/556,779	:	DECISION ON PETITION
Filed: April 25, 2000	:	
Attorney Docket No. AB-1600 US	:	

This is a decision on the renewed petition under the unintentional provisions of 37 CFR 1.137(b), filed November 02, 2007 to revive the above-identified application.

The petition is **GRANTED**.

The application became abandoned for failure to timely reply within the meaning of 37 CFR 1.113 to the final Office action, mailed December 14, 2005, which set a shortened statutory period for reply of three (3) months. No extensions of time under the provisions of 37 CFR 1.136(a) were obtained. Accordingly, the application became abandoned on March 15, 2006.

The petition satisfies the requirements of 37 CFR 1.137(b) in that petitioner has supplied (1) the reply in the form of a Request for Continued Examination (RCE) and fee of $810.00, and the submission required by 37 CFR 1.114; (2) the petition fee of $1,540.00; and (3) a proper statement of unintentional delay. Accordingly, the reply to the final Office action of December 14, 2005, is accepted as having been unintentionally delayed.

The Office acknowledges the supplemental amendment that was filed on November 08, 2007.

An extension of time is needed for the timely filing of the petition. Accordingly, petitioner's deposit account no. 50-2257 is being charged the one (1) month extension of time fee due of $120.00.

It is not apparent whether the person signing the statement of unintentional delay was in a position to have firsthand or direct knowledge of the facts and circumstances of the delay at issue. Nevertheless, such statement is being treated as having been made as the result of a reasonable inquiry into the facts and circumstances of such delay. See 37 CFR 10.18(b) and Changes to Patent Practice and Procedure; Final Rule Notice, 62 Fed. Reg. 53131, 53178 (October 10, 1997), 1203 Off. Gaz. Pat. Office 63, 103 (October 21, 1997). In the event that such an inquiry has not been made, petitioner must make such an inquiry. If such inquiry results in the discovery that it is not correct that the entire delay in filing the required reply from the due date for the reply until the filing of a grantable petition pursuant to 37 CFR 1.137(b) was unintentional, petitioner must notify the Office.

Telephone inquiries concerning this decision should be directed to the undersigned at (571) 272-4231.

This application is being referred to Technology Center AU 2629 for processing of the RCE and for appropriate action by the Examiner in the normal course of business on the amendment submitted in accordance with 37 CFR 1.114.

Michelle R. Eason

Michelle R. Eason
Paralegal Specialist
Office of Petitions

OIPE IAP22
NOV 0 2 2007
PATENT & TRADEMARK OFFICE

MacPherson Kwok Chen & Heid LLP

2033 Gateway Place, Suite 400
San Jose, CA 95110
Tel. (408) 392-9250
Fax (408) 392-9262

2402 Michelson Drive, Suite 210
Irvine, CA 92612
Tel. (949) 752-7040
Fax (949) 752-7049

Email: mailbox@ macpherson-kwok.com
www.macpherson-kwok.com

October 31, 2007

Mail Stop Petition
Commissioner for Patents
P.O. Box 1450
Alexandria, VA 22313-1450

Re:	Applicant(s):	MOON, Seong-Hwan		
	Assignee:	Samsung Electronics Co., Ltd.		
	Title:	LIQUID CRYSTAL DISPLAY		
	Application No.:	09/556,779	Filed:	04/25/2000
	Examiner:	Kumar, S.K.	Group Art:	2629
	Docket No.:	AB-1600 US	Confirmation No.:	8043

Dear Sir:

Transmitted herewith are the following documents in the above-identified application:

(1) Return Receipt Postcard;
(2) This Transmittal Letter (1 page in duplicate);
(3) Renewed Petition Under 37 CFR 1.137(b) (2 pages);
(4) Petition for Revival of an Application for Patent Abandoned Unintentionally Under 37 CFR 1.137(b) (2 pages);
(5) Amendment (18 pages);
(6) Request for Continued Examination (RCE) Transmittal (1 page in duplicate)
(7) Information Disclosure Statement Under 37 CFR §§ 1.56, 1.97 and 1.98 (3 pages – in duplicate); and
(8) Form PTO-1449 (One Reference Cited).

☐ No additional fee is required.
☒ The fee has been calculated as shown below:

03/07/2008 CKHLOK 00000001 502257 09556779
01 FC:1251 120.00 DA

CLAIMS AS AMENDED

	Claims Remaining *After* Amendment		Highest No. Previously Paid For		Present Extra		Rate		Additional Fee
Total Claims	29	Minus	29	=	0	x	$50.00	$	0.00
Independent Claims	2	Minus	3	=	0	x	$200.00	$	0.00

☐	Fee of _____ for the first filing of one or more multiple dependent claims per application	$	
☒	Fee for Petition to Revive	$	1,540.00
☒	Fee for Information Disclosure Statement	$	180.00
	Total additional fee for this Amendment:	$	

☒ Conditional Petition for Extension of Time: If an extension of time is required for timely filing of the enclosed document(s) after all papers filed with this transmittal have been considered, an extension of time is hereby requested.

☒ Please charge our Deposit Account No. 50-2257 in the amount of $ 1,720.00

☒ Also, charge any additional fees required and credit any overpayment to our Deposit Account No. 50-2257

Total: $ 1,720.00

FIRST CLASS CERTIFICATE OF MAILING
I hereby certify that this correspondence is being deposited with the U.S. Postal Service with sufficient postage as First Class Mail in an envelope addressed to: Commissioner of Patents, P.O. Box 1450, Alexandria, VA, 22313-1450, on October 31, 2007.

Typed or printed name of person signing this certificate:

Hugh H. Matsubayashi

Signature

Respectfully submitted,

for Howard R. Popper Reg No 43,779
Attorney for Applicants
Reg. No. 19,208

OIPE IAP22
NOV 02 2007
PATENT & TRADEMARK OFFICE

PTO/SB/64 (10-07)
Approved for use through 10/31/2007. OMB 0651-0031
U.S. Patent and Trademark Office; U.S. DEPARTMENT OF COMMERCE
Under the Paperwork Reduction Act of 1995, no persons are required to respond to a collection of information unless it displays a valid OMB control number.

PETITION FOR REVIVAL OF AN APPLICATION FOR PATENT ABANDONED UNINTENTIONALLY UNDER 37 CFR 1.137(b)

Docket Number (Optional) AB-1600 US

First named inventor: MOON, Seong-Hwan

Application No.: 09/556,779 Art Unit: 2629

Filed: 04/25/2000 Examiner: Kumar, S.K.

Title: Liquid Crystal Display

Attention: Office of Petitions
Mail Stop Petition
Commissioner for Patents
P.O. Box 1450
Alexandria, VA 22313-1450
FAX (571) 273-8300

NOTE: If information or assistance is needed in completing this form, please contact Petitions Information at (571) 272-3282.

The above-identified application became abandoned for failure to file a timely and proper reply to a notice or action by the United States Patent and Trademark Office. The date of abandonment is the day after the expiration date of the period set for reply in the office notice or action plus an extensions of time actually obtained.

APPLICANT HEREBY PETITIONS FOR REVIVAL OF THIS APPLICATION

NOTE: A grantable petition requires the following items:
(1) Petition fee;
(2) Reply and/or issue fee;
(3) Terminal disclaimer with disclaimer fee - required for all utility and plant applications filed before June 8, 1995; and for all design applications; and
(4) Statement that the entire delay was unintentional.

1. Petition fee
☐ Small entity-fee $ _____ (37 CFR 1.17(m)). Applicant claims small entity status. See 37 CFR 1.27.
☑ Other than small entity – fee $ 1,540.00 (37 CFR 1.17(m))

2. Reply and/or fee
A. The reply and/or fee to the above-noted Office action in the form of Renewed petition, Amendment, RCE & IDS (identify type of reply):
☐ has been filed previously on _____.
☑ is enclosed herewith.

B. The issue fee and publication fee (if applicable) of $ _____.
☐ has been paid previously on _____.
☐ is enclosed herewith.

This collection of information is required by 37 CFR 1.137(b). The information is required to obtain or retain a benefit by the public which is to file (and by the USPTO to process) an application. Confidentiality is governed by 35 U.S.C. 122 and 37 CFR 1.11 and 1.14. This collection is estimated to take 1.0 hour to complete, including gathering, preparing, and submitting the completed application form to the USPTO. Time will vary depending upon the individual case. Any comments on the amount of time you require to complete this form and/or suggestions for reducing this burden, should be sent to the Chief Information Officer, U.S. Patent and Trademark Office, U.S. Department of Commerce, P.O. Box 1450, Alexandria, VA 22313-1450. DO NOT SEND FEES OR COMPLETED FORMS TO THIS ADDRESS. **SEND TO: Mail Stop Petition, Commissioner for Patents, P.O. Box 1450, Alexandria, VA 22313-1450.**

If you need assistance in completing the form, call 1-800-PTO-9199 and select option 2.

11/05/2007 HVUONG1 00000043 502257 09556779
01 FC:1453 1540.00 DA

Under the Paperwork Reduction Act of 1995, no persons are required to respond to a collection of information unless it displays a valid OMB control number.

3. Terminal disclaimer with disclaimer fee

☑ Since this utility/plant application was filed on or after June 8, 1995, no terminal disclaimer is required.

☐ A terminal disclaimer (and disclaimer fee (37 CFR 1.20(d)) of $ _____ for a small entity or $ _____ for other than a small entity) disclaiming the required period of time is enclosed herewith (see PTO/SB/63).

4. STATEMENT: The entire delay in filing the required reply from the due date for the required reply until the filing of a grantable petition under 37 CFR 1.137(b) was unintentional. [NOTE: The United States Patent and Trademark Office may require additional information if there is a question as to whether either the abandonment or the delay in filing a petition under 37 CFR 1.137(b) was unintentional (MPEP 711.03(c), subsections (III)(C) and (D)).]

WARNING:

Petitioner/applicant is cautioned to avoid submitting personal information in documents filed in a patent application that may contribute to identity theft. Personal information such as social security numbers, bank account numbers, or credit card numbers (other than a check or credit card authorization form PTO-2038 submitted for payment purposes) is never required by the USPTO to support a petition or an application. If this type of personal information is included in documents submitted to the USPTO, petitioners/applicants should consider redacting such personal information from the documents before submitting them to the USPTO. Petitioner/applicant is advised that the record of a patent application is available to the public after publication of the application (unless a non-publication request in compliance with 37 CFR 1.213(a) is made in the application) or issuance of a patent. Furthermore, the record from an abandoned application may also be available to the public if the application is referenced in a published application or an issued patent (see 37 CFR 1.14). Checks and credit card authorization forms PTO-2038 submitted for payment purposes are not retained in the application file and therefore are not publicly available.

[signature] Reg No 43,779	Oct 31, 2007
Signature	Date
for Howard R. Popper	19,208
Typed or printed name	Registration Number, if applicable
MacPherson Kwok Chen & Heid LLP	408-392-9250
Address	Telephone Number
2033 Gateway Place, Suite 400, San Jose, CA 95110	
Address	

Enclosures: ☑ Fee Payment

☑ Reply

☐ Terminal Disclaimer Form

☐ Additional sheets containing statements establishing unintentional delay

☐ Other: _____

CERTIFICATE OF MAILING OR TRANSMISSION [37 CFR 1.8(a)]

I hereby certify that this correspondence is being:

☑ Deposited with the United States Postal Service on the date shown below with sufficient postage as first class mail in an envelope addressed to: Mail Stop Petition, Commissioner for Patents, P. O. Box 1450, Alexandria, VA 22313-1450.

☐ Transmitted by facsimile on the date shown below to the United States Patent and Trademark Office at (571) 273-8300.

Oct 31, 2007	[signature]
Date	Signature
	Hugh H. Matsubayashi
	Typed or printed name of person signing certificate

UNITED STATES PATENT AND TRADEMARK OFFICE

COMMISSIONER FOR PATENTS
UNITED STATES PATENT AND TRADEMARK OFFICE
P.O. BOX 1450
ALEXANDRIA, VA 22313-1450
www.uspto.gov

Paper No. 13

Snider & Associates
Ronald R Snider
P O Box 27613
Washington DC 20037-7613

MAIL

JUN 1 0 2004

DIRECTOR OFFICE
TECHNOLOGY CENTER 2600

In re Application of
Hiroyuki Ogawa
Application No. 09/556,824
Filed: April 21, 2000
For: **METHOD FOR OBSERVING OBJECT BY PROJECTION, METHOD FOR DETECTING MICROORGANISMS AND PROJECTION DETECTING SYSTEM**

DECISION GRANTING PETITION TO RESET PERIOD FOR REPLY

This is a decision on the petition filed on April 16, 2004, requesting that the shortened statutory period for reply set forth in the Office communication mailed on February 10, 2004 be reset to run from the date on which the Office communication was actually received at the correspondence address of record.

The petition is **GRANTED.**

Petitioner provided a declaration by Jill Tuncay and further evidence, in the way of Applicant's log book and date stamped envelope, that the Office communication in question was received at the correspondence address of record on April 14, 2004. The petition was filed within two weeks of receipt of the Office communication. A substantial portion of the set reply period had elapsed on the date of receipt. The petition meets the criteria for restarting a time period to respond to an Office action as set forth in MPEP § 710.06.

Accordingly, the shortened statutory period that was originally set forth in the Office action originally mailed on February 10, 2004 is hereby reset to run THREE MONTHS FROM THE RECEIPT DATE OF April 14, 2004.

Dwayne D. Bost
Special Program Examiner
Technology Center 2600
Communications

UNITED STATES PATENT AND TRADEMARK OFFICE

Commissioner for Patents
United States Patent and Trademark Office
P.O. Box 1450
Alexandria, VA 22313-1450
www.uspto.gov

Paper No. 13

OBLON, SPIVAK, MCCLELLAND,
MAIER & NEUSTADT, P.C.
1940 Duke Street
Alexandria, VA 22314

MAY 24 2004

In re Application of:
Doris Kuhlmann-Wilsdorf
Serial No.: 09/556,829
Filed: April 21, 2000
Attorney Docket No.: **10582-0002-20**

DECISION ACCEPTING PAPERS

This is a response to the communication filed, via facsimile transmission, on March 18, 2003, and supplemented August 14, 2003. The communication has been treated as a petition to accept a copy of a response, in place of the apparently lost original response, as timely. This is also a response to the request for withdrawal of the Notice of Appeal, and petition for refund of the three (3) month extension of time filed December 30, 2002.

The petition is to accept the copy of the response is granted.
The request to withdraw the Notice of Appeal is granted.
The petition to refund the extension of time fee is granted.

The final Office action was mailed on June 05, 2002. No Notice of Abandonment has been mailed.

The requester asserts that on December 04, 2002, a response to the final Office action was filed. The response included a Request for Continued Examination (RCE) and submission under 37 C.F.R. § 1.114. To support this assertion, the requester has provided a copy of the response which includes a proper Certificate of Mailing under 37 C.F.R. § 1.8, and a statement from attorney, Kimberly O. Snead, that attests on a personal knowledge basis, that the above identified response was mailed to the PTO on December 04, 2002, and a return post card bearing a date stamp of receipt of December 10, 2002.

A review of the application file record reveals that the above-identified response is not of record in the application file and cannot be located. However, 37 C.F.R. § 1.8(b) provides for accepting a correspondence as being timely filed if it was mailed or transmitted in accordance with 37 C.F.R. § 1.8(a). A further review reveals that the fee for the RCE was charged on December 11, 2002.

STATUTE, REGULATIONS AND PRACTICE

37 C.F.R. § 1.26 states in part that:

> (a) Money paid by actual mistake or in excess will be refunded, but a mere change of purpose after the payment of money, as when a party desires to withdraw an application, an appeal, or a request for oral hearing, will not entitle a party to demand such a return. Amounts of twenty - five dollars or less will not be returned unless specifically requested within a reasonable time, nor will the payer be notified of such amount; amounts over twenty - five dollars may be returned by check or, if requested, by credit to a deposit account.

OPINION

Because the RCE filed on December 04, 2002 was a proper response to the final Office action, the filing of the Notice of Appeal and the request for a three (3) month extension of time on December 05, 2002 was unnecessary to prevent the application from becoming abandoned by operation of law. Thus, the extension of time fee and the Notice of Appeal fee were paid by mistake or in excess. These fees will be refunded. The request for withdrawal of the Notice of Appeal and the petition for refund of the extension of time fee is hereby granted.

The application file is being forwarded to the Technology Center 2800 support staff for processing the RCE and entry of the submission and refund of the Notice of Appeal fee and the extension of time fee. From there, the application will be forwarded to the examiner for continued examination.

Inquiries regarding this decision should be directed to Clayton E. LaBalle at (571) 272-1594.

Richard K. Seidel, Director
Technology Center 2800
Semiconductors, Electrical and Optical
Systems and Components

UNITED STATES PATENT AND TRADEMARK OFFICE

Commissioner for Patents
United States Patent and Trademark Office
P.O. Box 1450
Alexandria, VA 22313-1450
www.uspto.gov

FISH & RICHARDSON PC
P O BOX 1022
MINNEAPOLIS, MN 55440-1022

COPY MAILED

DEC 0 1 2005

OFFICE OF PETITIONS

In re Application of	:
Miriam Mawle et al	:
Application No. 09/556,839	: DECISION GRANTING PETITION
Filed: April 21, 2000	: UNDER 37 CFR 1.313(c)(2)
Attorney Docket No. 06181-862002	:

This is a decision on the petition, filed November 18, 2005, under 37 CFR 1.313(c)(2) to withdraw the above-identified application from issue after payment of the issue fee.

The petition is **GRANTED**.

The above-identified application is withdrawn from issue for consideration of a submission under 37 CFR 1.114 (request for continued examination). See 37 CFR 1.313(c)(2).

Petitioner is advised that the issue fee paid on November 4, 2005 in the above-identified application cannot be refunded. If, however, the above-identified application is again allowed, petitioner may request that it be applied towards the issue fee required by the new Notice of Allowance.[1]

Telephone inquiries should be directed to the undersigned at (571) 272-3218.

This matter is being referred to Technology Center AU 3714 for processing of the request for continued examination under 37 CFR 1.114 and for consideration of the Information Disclosure Statement.

Frances Hicks
Petitions Examiner
Office of Petitions

---

[1] *The request to apply the issue fee to the new Notice may be satisfied by completing and returning the new Issue Fee Transmittal Form PTOL-85(b) (along with any balance due at the time of payment), which includes the following language thereon: "Commissioner for Patents is requested to apply the Issue Fee and Publication Fee (if any) or re-apply any previously paid issue fee to the application identified above." Petitioner is advised that, whether a fee is indicated as being due or not, the Issue Fee Transmittal Form* **must** *be completed and timely submitted to avoid abandonment. Note the language in bold text on the first page of the Notice of Allowance and Fee(s) Due (PTOL-85).*

UNITED STATES PATENT AND TRADEMARK OFFICE

COMMISSIONER FOR PATENT
UNITED STATES PATENT AND TRADEMARK OFFIC
P.O. BOX 1450
ALEXANDRIA, VA 22313-1450
www.uspto.go

MAIL

Paper No. 7

MENDELSOHN AND ASSOCIATES PC
1515 MARKET STREET
SUITE 715
PHILADELPHIA PA 19102

MAY 25 2004

DIRECTOR OFFICE
TECHNOLOGY CENTER 2600

In re Application of
Navid Lashkarian
Application No. 09/556,858
Filed: April 21, 2000
For: **MINIMUM VARIANCE UNBIASED AND MOMENT ESTIMATORS OF CARRIER FREQUENCY OFFSET IN MULTI-CARRIER SYSTEMS**

DECISION ON PETITION
TO WITHDRAW HOLDING OF
ABANDONMENT

This is a decision on the Petition to Withdraw Holding of Abandonment filed March 29, 2004, pursuant to 37 C.F.R.§ 1.181(a). No fee is required.

The petition is **GRANTED.**

This application became abandonment for failure to timely file a proper response to the Restriction Requirement mailed July 10, 2003 which set a shortened statutory period of one (1) month to reply. That period lapsed without reply, rendering this application abandoned as August 10, 2003. A Notice of Abandonment was mailed on March 17, 2004.

Petitioner alleges to have timely filed a response to the Restriction Requirement on July 16, 2003. To support this position, Petitioner has included with the instant petition, a copy of the postcard receipt, for the filing of the Response to Restriction Requirement on July 16, 2003 and a copy of the Response to the Restriction Requirement.

The original correspondence filed was not matched with the file and cannot be located. However, M.P.E.P. § 503 states, "[a] post card receipt which itemizes and properly identifies the papers which are being filed serves as *prima facie* evidence of receipt in the U.S.PTO of all the items listed thereon on the date stamped thereon by the PTO." Accordingly, it is concluded that the response was timely filed in the Patent and Trademark Office but not matched with the application file.

In view of the above stated reasons, the Notice of Abandonment is hereby vacated and the holding of abandonment withdrawn.

The application file is being forwarded to the Technology Center's technical support staff for entry of the copy of the amendment submitted with the petition. From there, the application file will be forwarded to the examiner for appropriate action in due course.

Dwayne D. Bost
Special Program Examiner
Technology Center 2600
Communications

UNITED STATES PATENT AND TRADEMARK OFFICE

COMMISSIONER FOR PATENTS
UNITED STATES PATENT AND TRADEMARK OFFICE
P.O. BOX 1450
ALEXANDRIA, VA 22313-1450
www.uspto.gov

Paper No. 19

AMSTER ROTHSTEIN & EBENSTEIN, LLP
90 PARK AVENUE
NEW YORK, NY 10016

COPY MAILED

NOV 10 2004

OFFICE OF PETITIONS

In re Application of :
Jamie J. Huggins, et al. :
Application No. 09/557,029 :
Filed: April 20, 2000 :
Attorney Docket No. HUG-P01/9904 :

ON PETITION

This is a decision on the petition under 37 CFR 1.137(b), filed August 9, 2004, to revive the above-identified application.

The petition is **GRANTED**.

This application became abandoned for failure to timely reply to the final Office action mailed December 6, 2001. A Notice of Abandonment was mailed August 14, 2002.

The application is revived for consideration of a submission under 37 CFR 1.114 (request for continued examination).

Telephone inquiries concerning this decision should be directed to the undersigned at (571) 272-3204.

The application file is being forwarded to Technology Center AU 3728, for further processing of the request for continued examination under 37 CFR 1.114 filed August 9, 2004.

Sherry D. Brinkley
Petitions Examiner
Office of Petitions
Office of the Deputy Commissioner
for Patent Examination Policy

Under the Paperwork Reduction Act of 1995, no persons are required to respond to a collection of information unless it displays valid OMB control number.

PETITION TO ACCEPT UNINTENTIONALLY DELAYED PAYMENT OF MAINTENANCE FEE IN AN EXPIRED PATENT (37 CFR 1.378(c))

Patent Number	Issue Date (YYYY-MM-DD)	Application Number	Filing Date (YYYY-MM-DD)	Docket Number (if applicable)
6,778,662	2004-08-17	09/557,113	2000-04-24	

CAUTION: Maintenance fee (and surcharge, if any) payment must correctly identify: (1) the patent number and (2) the application number of the actual U.S. application leading to issuance of that patent to ensure the fee(s) is/are associated with the correct patent. 37 CFR 1.366(c) and (d).

SMALL ENTITY
☒ Patentee claims, or has previously claimed, small entity status. See 37 CFR 1.27.

LOSS OF ENTITLEMENT TO SMALL ENTITY STATUS
☐ Patentee is no longer entitled to small entity status. See 37 CFR 1.27(g)

NOT Small Entity		Small Entity	
Fee	Code	Fee	Code
○ 3 ½ year	(1551)	◉ 3 ½ year	(2551)
○ 7 ½ year	(1552)	○ 7 ½ year	(2552)
○ 11 ½ year	(1553)	○ 11 ½ year	(2553)

SURCHARGE
The surcharge required by 37 CFR 1.20(i)(2) (Fee Code 1558) must be paid as a condition of accepting unintentionally delayed payment of the maintenance fee.

MAINTENANCE FEE (37 CFR 1.20(e)-(g))
The appropriate maintenance fee must be submitted with this petition.

STATEMENT
THE UNDERSIGNED CERTIFIES THAT THE DELAY IN PAYMENT OF THE MAINTENANCE FEE TO THIS PATENT WAS UNINTENTIONAL

PETITIONER(S) REQUEST THAT THE DELAYED PAYMENT OF THE MAINTENANCE FEE BE ACCEPTED AND THE PATENT REINSTATED

THIS PORTION MUST BE COMPLETED BY THE SIGNATORY OR SIGNATORIES

37 CFR 1.378(d) states: "Any petition under this section must be signed by an attorney or agent registered to practice before the Patent and Trademark Office, or by the patentee, the assignee, or other party in interest."

I certify, in accordance with 37 CFR 1.4(d)(4) that I am

○ An attorney or agent registered to practice before the Patent and Trademark Office

◉ A sole patentee

○ A joint patentee; I certify that I am authorized to sign this submission on behalf of all the other patentees.

○ A joint patentee; all of whom are signing this e-petition

○ The assignee of record of the entire interest

Sole Patentee			
A signature of the applicant or representative is required in accordance with 37 CFR 1.33 and 10.18. Please see 37 CFR 1.4(d) for the form of the signature.			
Signature	/Phillip M. DeLaine, Jr./	Date (YYYY-MM-DD)	2008-09-23
Name	Phillip M. DeLaine, Jr.		

This collection of information is required by 37 CFR 1.378(c). The information is required to obtain or retain a benefit by the public which is to file (and by the USPTO to process) an application. Confidentiality is governed by 35 U.S.C. 122 and 37 CFR 1.11 and 1.14. This collection is estimated to take 1 hour to complete, including gathering, preparing, and submitting the completed application form to the USPTO. Time will vary depending upon the individual case. Any comments on the amount of time you require to complete this form and/ or suggestions for reducing this burden, should be sent to the Chief Information Officer, U.S. Patent and Trademark Office, U.S. Department of Commerce, P.O. Box 1450, Alexandria, VA 22313-1450. DO NOT SEND FEES OR COMPLETED FORMS TO THIS ADDRESS. **This form can only be used when in conjunction with EFS-Web. If this form is mailed to the USPTO, it may cause delays in reinstating the patent.**

Privacy Act Statement

The Privacy Act of 1974 (P.L. 93-579) requires that you be given certain information in connection with your submission of the attached form related to a patent application or patent. Accordingly, pursuant to the requirements of the Act, please be advised that: (1) the general authority for the collection of this information is 35 U.S.C. 2(b)(2); (2) furnishing of the information solicited is voluntary; and (3) the principal purpose for which the information is used by the U.S. Patent and Trademark Office is to process and/or examine your submission related to a patent application or patent. If you do not furnish the requested information, the U.S. Patent and Trademark Office may not be able to process and/or examine your submission, which may result in termination of proceedings or abandonment of the application or expiration of the patent.

The information provided by you in this form will be subject to the following routine uses:

1. The information on this form will be treated confidentially to the extent allowed under the Freedom of Information Act (5 U.S.C. 552) and the Privacy Act (5 U.S.C. 552a). Records from this system of records may be disclosed to the Department of Justice to determine whether the Freedom of Information Act requires disclosure of these record s.

2. A record from this system of records may be disclosed, as a routine use, in the course of presenting evidence to a court, magistrate, or administrative tribunal, including disclosures to opposing counsel in the course of settlement negotiations.

3. A record in this system of records may be disclosed, as a routine use, to a Member of Congress submitting a request involving an individual, to whom the record pertains, when the individual has requested assistance from the Member with respect to the subject matter of the record.

4. A record in this system of records may be disclosed, as a routine use, to a contractor of the Agency having need for the information in order to perform a contract. Recipients of information shall be required to comply with the requirements of the Privacy Act of 1974, as amended, pursuant to 5 U.S.C. 552a(m).

5. A record related to an International Application filed under the Patent Cooperation Treaty in this system of records may be disclosed, as a routine use, to the International Bureau of the World Intellectual Property Organization, pursuant to the Patent Cooperation Treaty.

6. A record in this system of records may be disclosed, as a routine use, to another federal agency for purposes of National Security review (35 U.S.C. 181) and for review pursuant to the Atomic Energy Act (42 U.S.C. 218(c)).

7. A record from this system of records may be disclosed, as a routine use, to the Administrator, General Services, or his/her designee, during an inspection of records conducted by GSA as part of that agency's responsibility to recommend improvements in records management practices and programs, under authority of 44 U.S.C. 2904 and 2906. Such disclosure shall be made in accordance with the GSA regulations governing inspection of records for this purpose, and any other relevant (i.e., GSA or Commerce) directive. Such disclosure shall not be used to make determinations about individuals.

8. A record from this system of records may be disclosed, as a routine use, to the public after either publication of the application pursuant to 35 U.S.C. 122(b) or issuance of a patent pursuant to 35 U.S.C. 151. Further, a record may be disclosed, subject to the limitations of 37 CFR 1.14, as a routine use, to the public if the record was filed in an application which became abandoned or in which the proceedings were terminated and which application is referenced by either a published application, an application open to public inspections or an issued patent.

9. A record from this system of records may be disclosed, as a routine use, to a Federal, State, or local law enforcement agency, if the USPTO becomes aware of a violation or potential violation of law or regulation.

UNITED STATES PATENT AND TRADEMARK OFFICE

Commissioner for Patents
United States Patent and Trademark Office
P.O. Box 1450
Alexandria, VA 22313-1450
www.uspto.gov

In re Patent No. 6778662
Issue Date: August 17,2004
Application No. 09557113
Filed: April 24,2000
Attorney Docket No. ADP-007.01

:
:DECISION GRANTING PETITION
:UNDER 37 CFR 1.378(c)
:

This is a decision on the electronic petition, filed September 23,2008 ,under 37 CFR 1.378(c) to accept the unintentionally delayed payment of the 3.5 year maintenance fee for the above-identified patent.

The petition is **GRANTED**.

The maintenance fee is accepted, and the above-identified patent reinstated as of September 23,2008 . This decision also constitutes notice that the fee has been accepted. An electronic copy of the petition and this decision has been created as an entry in the Image File Wrapper. Nevertheless, petitioner should print and retain an independent copy.

Telephone inquiries related to this electronic decision should be directed to the Electronic Business Center at 1-866-217-9197.

UNITED STATES PATENT AND TRADEMARK OFFICE

Commissioner for Patents
United States Patent and Trademark Office
P.O. Box 1450
Alexandria, VA 22313-1450
www.uspto.gov

DENNIS M. FLAHERTY
OSTRAGER CHONG FLAHERTY & BROITMAN P.C.
250 PARK AVENUE, SUITE 825
EIGHTH FLOOR
NEW YORK, NY 10177-0899

COPY MAILED

SEP 20 2006

OFFICE OF PETITIONS

In re Application of	:	
Charles C. Brackett	:	
Application No. 09/557,153	:	ON PETITION
Filed: April 24, 2000	:	
Attorney Docket No. 15UL-5584	:	

This is a decision on the petition under 37 CFR 1.137(b), filed April 7, 2006, to revive the above-identified application.

The petition is **GRANTED**.

The two-month period for filing an appeal brief in triplicate (accompanied by the fee required by 37 CFR 1.17(c)), runs from the date of this decision.

The above-identified application became abandoned for failure to reply in a timely manner to the final Office action mailed March 11, 2005, which set a shortened statutory period for reply of three (3) months. No extensions of time under the provisions of 37 CFR 1.136(a) were obtained. Accordingly, the above-identified application became abandoned on June 12, 2005.

Telephone inquiries concerning this decision should be directed to Irvin Dingle at (571) 272-3210.

This matter is being forwarded to Technology Center AU 3626 for further processing.

Irvin Dingle
Petitions Examiner
Office of Petitions

09/557158

SPE RESPONSE FOR CERTIFICATE OF CORRECTION

Paper No.: _____

DATE : 3/15/05

TO SPE OF : ART UNIT 1764

SUBJECT : Request for Certificate of Correction on Patent No.: 6833013B

A response is requested with respect to the accompanying request for a certificate of correction.

Please complete this form and return with file, within **7** days to:
Certificates of Correction Branch - PK 3-915
Palm location **7580** - Tel. No. 305-8309

With respect to the change(s) requested, correcting Office and/or Applicant's errors, should the patent read as shown in the certificate of correction? No new matter should be introduced, nor should the scope or meaning of the claims be changed.

Virginia Tolbert

Thank You For Your Assistance — **Certificates of Correction Branch**

The request for issuing the above-identified correction(s) is hereby:
Note your decision on the appropriate box.

- ☒ **Approved** — All changes apply.
- ☐ **Approved in Part** — Specify below which changes **do not** apply.
- ☐ **Denied** — State the reasons for denial below.

Comments:

Glenn Caldarola
Supervisory Patent Examiner
Technology Center 1700

SPE — 1764 **Art Unit**

SPE RESPONSE FOR CERTIFICATE OF CORRECTION

Paper No.:____

DATE : 2/6/08

TO SPE OF : ART UNIT 2611

SUBJECT : Request for Certificate of Correction for Appl. No.: 9/557164 Patent No: 7187721B1

A response is requested with respect to a request for a certificate of correction.

With respect to the change(s) requested to correct Office and/or Applicant's errors, should the patent read as shown in the certificate of correction attached herewith or the COCIN document(s), in IFW images for the above-identified patented application? No new matter should be introduced, nor should the scope or meaning of the claims be changed.

If the response is for an IFW, within 7 days, please complete and forward the response, to the employee (named below) via scanning into application images, using document code **COCX**.

If the response is for a paper file wrapper, please complete the response and forward the response with the paper file wrapper, to the employee (named below), within 7 days, to:

Certificates of Correction Branch (CofC)
South Tower - 9A22
Palm Location 7580

VIRGINIA TOLBERT
Certificates of Correction Branch
703-308-9390 ext. 113

Thank You For Your Assistance

The request for issuing the above-identified correction(s) is hereby:
Note your decision on the appropriate box.

- ☑ **Approved** — All changes apply.
- ☐ **Approved In Part** — Specify below which changes **do not** apply.
- ☐ **Denied** — State the reasons for denial below.

Comments: _____

SPE

2611
Art Unit

UNITED STATES PATENT AND TRADEMARK OFFICE

Commissioner for Patents
United States Patent and Trademark Office
P.O. Box 1450
Alexandria, VA 22313-1450
www.uspto.gov

FISH & RICHARDSON P.C.
225 FRANKLIN STREET
BOSTON, MA 02110

COPY MAILED

NOV 17 2004

OFFICE OF PETITIONS
ON PETITION

In re Application of :
Bruce Hamilton et al :
Application No. 09/557,258 :
Filed: April 24, 2000 :
Attorney Docket No. 01194-334003

This is a decision on the petition, filed November 16, 2004, under 37 CFR 1.313(c)(2) to withdraw the above-identified application from issue after payment of the issue fee.

The petition is **GRANTED**.

The above-identified application is withdrawn from issue for consideration of a submission under 37 CFR 1.114 (request for continued examination). See 37 CFR 1.313(c)(2).

Petitioner is advised that the issue fee paid on June 9, 2004 in the above-identified application cannot be refunded. If, however, the above-identified application is again allowed, petitioner may request that it be applied towards the issue fee required by the new Notice of Allowance.[1]

Telephone inquiries should be directed to Irvin Dingle at (571) 272-3210.

This matter will be forwarded to Technology Center AU 1732 for processing of the request for continued examination under 37 CFR 1.114 and for consideration of the concurrently filed Information Disclosure Statement.

Irvin Dingle
Petitions Examiner
Office of Petitions
Office of the Deputy Commissioner
for Patent Examination Policy

---

[1] The request to apply the issue fee to the new Notice may be satisfied by completing and returning the new Issue Fee Transmittal Form PTOL-85(b), which includes the following language thereon: Commissioner for Patents is requested to apply the Issue Fee and Publication Fee (if any) or re-apply any previously paid issue fee to the application identified above. Petitioner is advised that, whether a fee is indicated as being due or not, the Issue Fee Transmittal Form **must** be completed and timely submitted to avoid abandonment. Note the language in bold text on the first page of the Notice of Allowance and Fee(s) Due (PTOL-85).

UNITED STATES PATENT AND TRADEMARK OFFICE

COMMISSIONER FOR PATENTS
UNITED STATES PATENT AND TRADEMARK OFFICE
P.O. BOX 1450
ALEXANDRIA, VA 22313-1450
www.uspto.go

SCHWEGMAN, LUNDBERG, WOESSNER &
KLUTH, P.A.
P.O. BOX 2938
MINNEAPOLIS, MN 55402

MAIL

DEC 0 2 2004

DIRECTOR OFFICE
TECHNOLOGY CENTER 2600

In re application of:
Glen K. Okita, et al.
Application No. 09/557,264
Filed: April 24, 2000
For: APPARATUS AND METHOD FOR COLLECTING AND DISPLAYING INFORMATION IN A WORKFLOW SYSTEM

DECISION ON REQUEST TO WITHDRAW FROM RECORD

This is a decision on the request to withdraw as attorney/agent and change of address filed on October 5, 2004.

A grantable request to withdraw as attorney/agent of record must:
(1) indicate the present mailing address of the attorney(s)/agent(s) who seek(s) to withdraw, and
(2) be signed by each attorney/agent seeking to withdraw or clearly be signed on their behalf, and
(3) be *approved* at least thirty (30) days prior to the maximum extendable period for response to any outstanding Office Action, and
(4) indicate the address to which future correspondence should be mailed.

Attorney requesting withdrawal is not of record.

Accordingly, the request is **DENIED**.

All future communications from the Office will continue to be directed to the address listed above until otherwise notified by applicant. Applicant is reminded of the obligation to promptly notify the Patent and Trademark Office of any change in correspondence address to ensure receipt of all communications from the Office.

Kenneth A. Wieder
Special Program Examiner
Technology Center 2600
Communications
(571) 272-2986

UNITED STATES PATENT AND TRADEMARK OFFICE

COMMISSIONER FOR PATENTS
UNITED STATES PATENT AND TRADEMARK OFFICE
P.O. BOX 1450
ALEXANDRIA, VA 22313-1450
www.uspto.gov

ANDRE L. MARAIS
SCHWEGMAN, LUNDBERG, WOESSNER & KLUTH
99 ALMADEN BLVD., SUITE 520
SAN JOSE, CA 95113

COPY MAILED

JUN 20 2006

OFFICE OF PETITIONS

In re Application of	:	
Glen K. Okita, et al.	:	
Application No. 09/557,264	:	DECISION ON REQUEST
Filed: April 24, 2000	:	TO WITHDRAW
Attorney Docket No. 2046.001US1	:	FROM RECORD
	:	

This is a decision on the Request to Withdraw as attorney or agent of record under 37 CFR §1.36(b), filed March 24, 2006.

The request is **NOT APPROVED** as moot.

A review of the file record indicates that the power of attorney to Andrea L. Marais and all the attorneys/agents of record associated with Customer No. 21186 was revoked by the assignee of the patent application on April 7, 2006. Accordingly, the request to withdraw under 37 CFR §1.36(b) is moot.

All future communications from the Office will continue to be directed to the below-listed address until otherwise notified by applicant.

There is no outstanding Office action that requires a reply from applicant.

Telephone inquires concerning this decision should be directed to Sherry D. Brinkley at 571-272- 3204.

Sherry D. Brinkley
Petitions Examiner
Office of Petitions

Conferee: JH

cc: WELSH & KATZ, LTD
120 S RIVERSIDE PLAZA
22ND FLOOR
CHICAGO IL 60606

UNITED STATES PATENT AND TRADEMARK OFFICE

COMMISSIONER FOR PATEN
UNITED STATES PATENT AND TRADEMARK OFFI
WASHINGTON, D.C. 2023
www.uspto.g

MAILED

JAN 1 4 2003

Technology Center 2100

Paper No. 7

James E. Parsons
SKJERVEN, MORRILL, MACPHERSON,
FRANKLIN & FRIEL LLP
25 Metro Drive, Suite 700
San Jose, CA 95110-1349

In re Application of:	)	
Berg, Thomas E. et al	)	
Application No. 09/557,284	)	**DECISION ON REQUEST FOR**
Filed: April 24, 2000	)	**WITHDRAWAL AS ATTORNEY**
For: TILT FOCUS METHOD AND MECHANISM FOR AN OPTICAL DRIVE	)	

This is a decision on the Request To Withdraw from Representation filed December 24, 2002.

A grantable request to withdraw as attorney of record should indicate thereon the present mailing addresses of the attorney(s) who is/are withdrawing from the record and of the applicant. The request for withdrawal must be signed by every attorney seeking to withdraw or contain a clear indication that one attorney is signing on behalf of another/others. A request to withdraw will not be approved unless at least 30 (thirty) days would remain between the date of approval and the later of the expiration date of a time to file a response or the expiration date of the maximum time period which can be extended under 37 C.F.R. § 1. 136(a). The effective date of withdrawal being the date of decision and not the date of request. See M.P.E.P. § 402.06. 37 C.F.R. § 1.36 further requires that the applicant or patent owner be notified of the withdrawal of the attorney or agent.

The request filed December 24, 2002 meets all the requirements. Accordingly the request is **GRANTED**.

All future communications from the Office will be directed to the below-listed address until otherwise notified by applicant. This correspondence address is provided by the withdrawn attorney(s). Applicant is reminded of the obligation to promptly notify the Patent and Trademark Office (Office) of any change in correspondence address to ensure receipt of all communications from the Office.

James R. Matthews

For Vincent N. Trans
Special Programs Examiner
Technology Center 2100
Computer Architecture and Software
(703) 305-9750

cc: Alan MacPherson
MACPHERSON KWOK CHEN & HEID LLP
2001 Gateway Place, Suite 195
San Jose, CA 95110

UNITED STATES PATENT AND TRADEMARK OFFICE

Commissioner for Patents
United States Patent and Trademark Office
P.O. Box 1450
Alexandria, VA 22313-1450
www.uspto.gov

COPY MAILED

JUN 15 2006

OFFICE OF PETITIONS

SCHWEGMAN, LUNDBERG, WOESSNER & KLUTH
P.O. BOX 2938
MINNEAPOLIS, MN 55402

In re Application of	:	
Glen K. Okita et al	:	
Application No. 09/557,334	:	DECISION ON PETITION
Filed: April 24, 2000	:	TO WITHDRAW
Attorney Docket No. 0600/96755	:	FROM RECORD
	:	

This is a decision on the Request to Withdraw as attorney or agent of record under 37 C.F.R. § 1.36(b), filed April 11, 2006.

The request is **NOT APPROVED** as moot.

A review of the file record indicates that the power of attorney to Andre Marais, along with all of the other attorneys associated with Customer No. **21186** has been revoked by the assignee of the patent application on May 8, 2006. Accordingly, the request to withdraw under 37 C.F.R. § 1.36(b) is moot.

All future communications from the Office will be directed to the below-listed address until otherwise notified by applicant/assignee or the current attorneys of record.

This application is being referred to Technology Center AU 2163 to await a reply to the Restriction Requirement mailed April 3, 2006.

Telephone inquires concerning this decision should be directed to the undersigned at 571-272- 3208.

Karen Creasy

Karen Creasy
Petitions Examiner
Office of Petitions

cc:

WELSH & KATZ, LTD
120 S RIVERSIDE PLAZA
22ND FLOOR
CHICAGO, IL 60606

UNITED STATES PATENT AND TRADEMARK OFFICE

Commissioner for Patents
United States Patent and Trademark Office
P.O. Box 1450
Alexandria, VA 22313-1450
www.uspto.gov

INVITROGEN CORPORATION
INTELLECTUAL PROPERTY DEPARTMENT
1600 FARADAY AVENUE
CARLSBAD CA 92006

COPY MAILED

NOV 0 8 2005

OFFICE OF PETITIONS

In re Application of :
Belotserkovskii, et al. :
Application No. 09/557,423 :
Filed: April 21, 2000 :
Attorney Docket No.: A-68112-1/RFT/RMS/DSS :
For: LOCKED NUCLEIC ACID HYBRIDS AND METHODS OF USE

DECISION ON PETITION

This is a decision on the petition under 37 CFR 1.137(b), filed July 14, 2005, to revive the above-identified application.

This application became abandoned for failure to timely pay the issue fee and publication fee within three (3) months of the mailing of the March 1, 2005 Notice of Allowance and Fee(s) Due. Accordingly, this application became abandoned on June 2, 2005. The filing of the instant petition precedes the mailing of A Notice of Abandonment.

Applicants have submitted a reply in the form of the issue fee, the publication fee, and a completed PTOL-85, an acceptable statement of the unintentional nature of the delay in responding to the March 1, 2005 Notice of Allowance and Fee(s) Due, and the petition fee.

Regarding the statement of unintentional delay, it is not apparent that the statement was signed by a person who would have been in a position of knowing that the delay in filing a timely response was unintentional. In the event that practitioner has no knowledge that the delay was in fact unintentional, practitioner should make a reasonable inquiry to ascertain that, in fact, the delay was unintentional. If practitioner discovers that the delay was intentional, practitioner must so notify the Office. A courtesy copy of this decision is being mailed to the address given on the petition. However, any future correspondence regarding this application will be mailed to the address of record.

The petition is **granted**.

This application is being forwarded to Publishing Division for processing into a patent.

Telephone inquiries concerning this matter may be directed to the undersigned at (571) 272-3230.

E Shirene Willis

E. Shirene Willis
Senior Petitions Attorney
Office of Petitions

cc: KOREN ANDERSON
29851 WILLOW CREEK ROAD
EUGENE, OR 97402

Under the Paperwork Reduction Act of 1995, no persons are required to respond to a collection of information unless it displays valid OMB control number.

PETITION TO ACCEPT UNINTENTIONALLY DELAYED PAYMENT OF MAINTENANCE FEE IN AN EXPIRED PATENT (37 CFR 1.378(c))

Patent Number	Issue Date (YYYY-MM-DD)	Application Number	Filing Date (YYYY-MM-DD)	Docket Number (if applicable)
6545564	2003-04-08	09557432	2000-04-25	S16-002

CAUTION: Maintenance fee (and surcharge, if any) payment must correctly identify: (1) the patent number and (2) the application number of the actual U.S. application leading to issuance of that patent to ensure the fee(s) is/are associated with the correct patent. 37 CFR 1.366(c) and (d).

SMALL ENTITY
☐ Patentee claims, or has previously claimed, small entity status. See 37 CFR 1.27.

LOSS OF ENTITLEMENT TO SMALL ENTITY STATUS
☐ Patentee is no longer entitled to small entity status. See 37 CFR 1.27(g)

NOT Small Entity		Small Entity	
Fee	Code	Fee	Code
◉ 3 ½ year	(1551)	○ 3 ½ year	(2551)
○ 7 ½ year	(1552)	○ 7 ½ year	(2552)
○ 11 ½ year	(1553)	○ 11 ½ year	(2553)

SURCHARGE
The surcharge required by 37 CFR 1.20(i)(2) (Fee Code 1558) must be paid as a condition of accepting unintentionally delayed payment of the maintenance fee.

MAINTENANCE FEE (37 CFR 1.20(e)-(g))
The appropriate maintenance fee must be submitted with this petition.

STATEMENT
THE UNDERSIGNED CERTIFIES THAT THE DELAY IN PAYMENT OF THE MAINTENANCE FEE TO THIS PATENT WAS UNINTENTIONAL

PETITIONER(S) REQUEST THAT THE DELAYED PAYMENT OF THE MAINTENANCE FEE BE ACCEPTED AND THE PATENT REINSTATED

THIS PORTION MUST BE COMPLETED BY THE SIGNATORY OR SIGNATORIES

37 CFR 1.378(d) states: "Any petition under this section must be signed by an attorney or agent registered to practice before the Patent and Trademark Office, or by the patentee, the assignee, or other party in interest."

I certify, in accordance with 37 CFR 1.4(d)(4) that I am

◉ An attorney or agent registered to practice before the Patent and Trademark Office

○ A sole patentee

○ A joint patentee; I certify that I am authorized to sign this submission on behalf of all the other patentees.

○ A joint patentee; all of whom are signing this e-petition

○ The assignee of record of the entire interest

Patent Practitioner			
A signature of the applicant or representative is required in accordance with 37 CFR 1.33 and 10.18. Please see 37 CFR 1.4(d) for the form of the signature			
Signature	/George A Herbster/	Date (YYYY-MM-DD)	2007-06-07
Name	George A. Herbster	Registration Number	24002

This collection of information is required by 37 CFR 1.378(c). The information is required to obtain or retain a benefit by the public which is to file (and by the USPTO to process) an application. Confidentiality is governed by 35 U.S.C. 122 and 37 CFR 1.11 and 1.14. This collection is estimated to take 1 hour to complete, including gathering, preparing, and submitting the completed application form to the USPTO. Time will vary depending upon the individual case. Any comments on the amount of time you require to complete this form and/ or suggestions for reducing this burden, should be sent to the Chief Information Officer, U.S. Patent and Trademark Office, U.S. Department of Commerce, P.O. Box 1450, Alexandria, VA 22313-1450. DO NOT SEND FEES OR COMPLETED FORMS TO THIS ADDRESS. **This form can only be used when in conjunction with EFS-Web. If this form is mailed to the USPTO, it may cause delays in reinstating the patent.**

Privacy Act Statement

The Privacy Act of 1974 (P.L. 93-579) requires that you be given certain information in connection with your submission of the attached form related to a patent application or patent. Accordingly, pursuant to the requirements of the Act, please be advised that: (1) the general authority for the collection of this information is 35 U.S.C. 2(b)(2); (2) furnishing of the information solicited is voluntary; and (3) the principal purpose for which the information is used by the U.S. Patent and Trademark Office is to process and/or examine your submission related to a patent application or patent. If you do not furnish the requested information, the U.S. Patent and Trademark Office may not be able to process and/or examine your submission, which may result in termination of proceedings or abandonment of the application or expiration of the patent.

The information provided by you in this form will be subject to the following routine uses:

1. The information on this form will be treated confidentially to the extent allowed under the Freedom of Information Act (5 U.S.C. 552) and the Privacy Act (5 U.S.C. 552a). Records from this system of records may be disclosed to the Department of Justice to determine whether the Freedom of Information Act requires disclosure of these record s.

2. A record from this system of records may be disclosed, as a routine use, in the course of presenting evidence to a court, magistrate, or administrative tribunal, including disclosures to opposing counsel in the course of settlement negotiations.

3. A record in this system of records may be disclosed, as a routine use, to a Member of Congress submitting a request involving an individual, to whom the record pertains, when the individual has requested assistance from the Member with respect to the subject matter of the record.

4. A record in this system of records may be disclosed, as a routine use, to a contractor of the Agency having need for the information in order to perform a contract. Recipients of information shall be required to comply with the requirements of the Privacy Act of 1974, as amended, pursuant to 5 U.S.C. 552a(m).

5. A record related to an International Application filed under the Patent Cooperation Treaty in this system of records may be disclosed, as a routine use, to the International Bureau of the World Intellectual Property Organization, pursuant to the Patent Cooperation Treaty.

6. A record in this system of records may be disclosed, as a routine use, to another federal agency for purposes of National Security review (35 U.S.C. 181) and for review pursuant to the Atomic Energy Act (42 U.S.C. 218(c)).

7. A record from this system of records may be disclosed, as a routine use, to the Administrator, General Services, or his/her designee, during an inspection of records conducted by GSA as part of that agency's responsibility to recommend improvements in records management practices and programs, under authority of 44 U.S.C. 2904 and 2906. Such disclosure shall be made in accordance with the GSA regulations governing inspection of records for this purpose, and any other relevant (i.e., GSA or Commerce) directive. Such disclosure shall not be used to make determinations about individuals.

8. A record from this system of records may be disclosed, as a routine use, to the public after either publication of the application pursuant to 35 U.S.C. 122(b) or issuance of a patent pursuant to 35 U.S.C. 151. Further, a record may be disclosed, subject to the limitations of 37 CFR 1.14, as a routine use, to the public if the record was filed in an application which became abandoned or in which the proceedings were terminated and which application is referenced by either a published application, an application open to public inspections or an issued patent.

9. A record from this system of records may be disclosed, as a routine use, to a Federal, State, or local law enforcement agency, if the USPTO becomes aware of a violation or potential violation of law or regulation.

UNITED STATES PATENT AND TRADEMARK OFFICE

Commissioner for Patents
United States Patent and Trademark Office
P.O. Box 1450
Alexandria, VA 22313-1450
www.uspto.gov

In re Patent No. 6545564
Issue Date: April 8,2003
Application No. 09557432
Filed: April 25,2000
Attorney Docket No. S16-002

:
:DECISION GRANTING PETITION
:UNDER 37 CFR 1.378(c)
:

This is a decision on the electronic petition, filed June 7,2007 ,under 37 CFR 1.378(c) to accept the unintentionally delayed payment of the 3.5 year maintenance fee for the above-identified patent.

The petition is GRANTED.

The maintenance fee is accepted, and the above-identified patent reinstated as of June 7,2007 . This decision also constitutes notice that the fee has been accepted. An electronic copy of the petition and this decision has been created as an entry in an Image File Wrapper. Nevertheless, petitioner should print and retain an independent copy

Telephone inquires related to this electronic decision should be directed to the Electronic Business Center at 1-866-217-9197.

UNITED STATES PATENT AND TRADEMARK OFFICE

Commissioner for Patents
United States Patent and Trademark Office
P. O. Box 1450
Alexandria, VA 22313-1450
www. uspto. gov

Paper No. 11

FARJAMI & FARJAMI
26522 LA ALAMEDA AVE., SUITE 360
MISSION VIEJO, CA 92691

COPY MAILED

APR 0 6 2005

OFFICE OF PETITIONS

In re Application of :
Lester J. Kozlowski et al :
Application No. 09/557,454 :
Filed: April 24, 2000 :
Attorney Docket No. 98RSS367 :

ON PETITION

This is a decision on the petition under 37 CFR 1.137(b), filed March 7, 2005, to revive the above-identified application.

The petition is **GRANTED**.

The above-identified application became abandoned for failure to reply in a timely manner to the Office action mailed December 24, 2003, which set a shortened statutory period for reply of one (1) month or thirty (30) days (whichever is later). No extensions of time under the provisions of 37 CFR 1.136(a) were obtained. Accordingly, the above-identified application became abandoned on January 25, 2004.

Telephone inquiries concerning this decision should be directed to Irvin Dingle at (571) 272-3210.

The application is being forwarded to Technology Center AU 2612 for further processing.

Irvin Dingle
Petitions Examiner
Office of Petitions
Office of the Deputy Commissioner
for Patent Examination Policy

UNITED STATES PATENT AND TRADEMARK OFFICE

COMMISSIONER FOR PATENTS
UNITED STATES PATENT AND TRADEMARK OFFICE
WASHINGTON, D.C. 20231
www.uspto.gov

Paper No. 9

Judy C Jarecki-Black PhD
Womble Carlyle Sandridge & Rice PLLC
Ste 3500 One Atlantic Center
1201 West Peachtree Street
Atlanta GA 30309

COPY MAILED

MAR 0 5 2003

OFFICE OF PETITIONS

In re Application of
Abell, et al.
Application No. 09/557,495
Filed: April 24, 2000
Attorney Docket No. P092 1020

DECISION ON PETITION

This is a decision on the petition under 37 CFR 1.137(a), filed February 6, 2003, to revive the above-cited application. The petition will also be treated as a petition under 37 CFR 1.181(a) to withdraw the holding of abandonment.

The petition under 37 CFR 1.181(a) is **granted**.

The petition under 37 CFR 1.137(a) is **moot.**

TREATMENT UNDER 37 CFR 1.181(a)

This application was held abandoned on July 2, 2002, after no reply was received to the non-final Office action, mailed April 1, 2002, which set a three-month statutory period for reply. Petitioner was advised that the above-cited application was abandoned by a Notice of Abandonment mailed October 23, 2002. Petitioner filed the instant petition on February 6, 2003, and therein argued that the non-final Office action was never received. In support of the instant petition, petitioner filed a statement indicating that the notice was never received and that a search of the file jacket and docket records supports the same and copy of the docket record where the subject notice would have been entered had it been received

Section 711.03(c)(II) of the *Manual of Patent Examining Procedure* ("MPEP") provides that in order to establish non-receipt of an Office action so as prove that the imposition of a holding of abandonment is improper, petitioner must: 1) provide a statement to the Office indicating that the Office action was not received by petitioner; 2) include in the statement an attestation to the fact that a review of the file jacket and docket records maintained by petitioner indicates that the Office action was not received; and 3) provide a copy of the docket record where the non-received Office communication would have been entered had it been received and docketed.

Petitioner has meet the burden of proof as established by Section 711.03(c)(II) of the MPEP. The holding of abandonment is, therefore, withdrawn.

Petitioner is advised that there is no petition fee associated with a petition to withdraw a holding of abandonment filed under 37 CFR § 1.181(a).

TREATMENT UNDER 37 CFR 1.137(a)

As the holding of abandonment has been withdrawn pursuant to 37 CFR 1.181(a), there is no remedy that could be provided by the petition under 37 CFR 1.137(a). The petition under 37 CFR 1.137(a) is, therefore, rendered moot by the granting of the petition under 37 CFR 1.181(a) to withdraw the holding of abandonment.

The petition fee of $55.00 will be refunded to petitioner, in due course.

Petitioner is advised that the above-cited application will be forwarded to the Office of Patent Publications for processing into a patent.

Telephone inquiries concerning this decision may be directed to the undersigned, at (703) 305-0010.

Kenya A. McLaughlin

Kenya A. McLaughlin
Petitions Attorney
Office of Petitions

UNITED STATES PATENT AND TRADEMARK OFFICE

Commissioner for Patents
United States Patent and Trademark Office
P.O. Box 1450
Alexandria, VA 22313-1450
www.uspto.gov

PIETRAGALLO GORDON ALFANO BOSICK & RASPANTI LLP
ONE OXFORD CENTRE, 38TH FLOOR
301 GRANT STREET
PITTSBURGH PA 15219-6404

MAILED

OCT 15 2009

OFFICE OF PETITIONS

In re Application of	:	
Joseph S. Murken	:	
Application No. 09/557,578	:	DECISION ON
Filed: April 22, 2000	:	PETITION TO WITHDRAW
Attorney Docket No. M-00025-001	:	FROM RECORD
	:	

This is a decision on the Request to Withdraw as attorney or agent of record under 37 C.F.R. § 1.36(b), filed July 22, 2009.

The request is **NOT APPROVED**.

A review of the file record indicates that R. William Graham does not have power of attorney in this patent application. Accordingly, the request to withdraw under 37 C.F.R. § 1.36(b) is not applicable.

All future communications from the Office will continue to be directed to the above-listed address until otherwise properly notified by the applicant.

Telephone inquires concerning this decision should be directed to Kimberly Inabinet at 571-272-4618.

/Kimberly Inabinet/
Kimberly Inabinet
Petitions Examiner
Office of Petitions

UNITED STATES PATENT AND TRADEMARK OFFICE

Commissioner for Patents
United States Patent and Trademark Office
P.O. Box 1450
Alexandria, VA 22313-1450
www.uspto.gov

PIETRAGALLO GORDON ALFANO BOSICK & RASPANTI LLP
ONE OXFORD CENTRE, 38TH FLOOR
301 GRANT STREET
PITTSBURGH PA 15219-6404

COPY MAILED

OCT 21 2009

OFFICE OF PETITIONS

In re Application of	:	
Joseph S. Murken	:	
Application No. 09/557,578	:	CORRECTED DECISION
Filed: April 22, 2000	:	ON PETITION TO
Attorney Docket No. M-00025-001	:	WITHDRAW FROM RECORD
	:	

This is a corrected decision on the Request to Withdraw as attorney or agent of record under 37 C.F.R. § 1.36(b), filed July 22, 2009.

The request is **NOT APPROVED**.

A review of the file record indicates that R. William Graham does not have power of attorney in this patent application. Accordingly, the request to withdraw under 37 C.F.R. § 1.36(b) is not applicable.

All future communications from the Office will continue to be directed to the above-listed address until otherwise properly notified by the applicant.

Telephone inquires concerning this decision should be directed to Kimberly Inabinet at 571-272-4618.

/Kimberly Inabinet/
Kimberly Inabinet
Petitions Examiner
Office of Petitions

cc: R. William Graham
A Patent Lawyer Corp PC
22 S. St. Clair Street
Dayton, OH 45402

UNITED STATES PATENT AND TRADEMARK OFFICE

Commissioner for Patents
United States Patent and Trademark Office
P.O. Box 1450
Alexandria, VA 22313-1450
www.uspto.gov

PATTERSON, THUENTE, SKAAR & CHRISTENSEN, P.A.
4800 IDS CENTER
80 SOUTH 8TH STREET
MINNEAPOLIS MN 55402-2100

COPY MAILED

JAN 25 2005

OFFICE OF PETITIONS

In re Application of :
Xiangxin Bi et al :
Application No. 09/557,696 : ON PETITION
Filed: April 25, 2000 :
Attorney Docket No. N19.12-0035 :

This is a decision on the petition, filed January 12, 2005, under 37 CFR 1.313(c)(2) to withdraw the above-identified application from issue after payment of the issue fee.

The petition is **GRANTED**.

The above-identified application is withdrawn from issue for consideration of a submission under 37 CFR 1.114 (request for continued examination). See 37 CFR 1.313(c)(2).

Petitioner is advised that the issue fee paid on December 17, 2004 in the above-identified application cannot be refunded. If, however, the above-identified application is again allowed, petitioner may request that it be applied towards the issue fee required by the new Notice of Allowance.[1]

Telephone inquiries should be directed to the undersigned at (571) 272-3208.

The examiner of Technology Center AU 1743 will consider the request for continued examination under 37 CFR 1.114.

Karen Creasy

Karen Creasy
Petitions Examiner
Office of Petitions
Office of the Deputy Commissioner
for Patent Examination Policy

---

[1] The request to apply the issue fee to the new Notice may be satisfied by completing and returning the new Issue Fee Transmittal Form PTOL-85(b), which includes the following language thereon: "Commissioner for Patents is requested to apply the Issue Fee and Publication Fee (if any) or re-apply any previously paid issue fee to the application identified above." Petitioner is advised that, whether a fee is indicated as being due or not, the Issue Fee Transmittal Form **must** be completed and timely submitted to avoid abandonment. Note the language in bold text on the first page of the Notice of Allowance and Fee(s) Due (PTOL-85).

UNITED STATES PATENT AND TRADEMARK OFFICE

COMMISSIONER FOR PATENTS
UNITED STATES PATENT AND TRADEMARK OFFICE
WASHINGTON, D.C. 20231
www.uspto.gov

Paper No. 8

CATHRYN CAMPBELL
CAMPBELL & FLORES
4370 LA JOLLA VILLAGE DRIVE
7TH FLOOR
SAN DIEGO, CA 92122

COPY MAILED

NOV 2 2 2000

OFFICE OF PETITIONS
A/C PATENTS

In re Application of	:
James Hoch et al.	:
Application No. 09/557,796	: NOTICE
Filed: April 25, 2000	:
Attorney Docket No. 252/123	:

This is a notice regarding your request for acceptance of a fee deficiency submission under 37 CFR 1.28. On September 1, 1998, the Court of Appeals for the Federal Circuit held that 37 CFR 1.28(c) is the sole provision governing the time for correction of the erroneous payment of the issue fee as a small entity. See DH Technology v. Synergystex International, Inc.. No. 97-1128, -1280, -1453, 1998 U.S. App. LEXIS 21409, at *30 (Fed. Cir. Sept. 1, 1998). Therefore, your fee deficiency submission under 37 CFR 1.28 is hereby **ACCEPTED**.

Inquiries related to this communication should be directed to the Office of Petitions Staff at (703) 305-9285.

This file is being returned to Technology Center 1600.

Wan Laymon

Wan Laymon
Petitions Examiner
Office of Petitions
Office of the Deputy Assistant Commissioner
for Patent Policy and Projects

UNITED STATES PATENT AND TRADEMARK OFFICE

COMMISSIONER FOR PATENTS
UNITED STATES PATENT AND TRADEMARK OFFICE
P.O. BOX 1450
ALEXANDRIA, VA 22313-1450
www.uspto.gov

COPY MAILED
JUL 17 2006
OFFICE OF PETITIONS

Niro Scavone Haller & Niro
Suite 4600
181 West Madison Street
Chicago, IL 60602

In re Application of :
Barton : DECISION ON PETITION
Application No. 09/557,822 :
Filed: April 25, 2000 :
Docket No.: 2799CIP :

This is a decision on the petition to withdraw the holding of abandonment under 37 CFR 1.181, filed June 5, 2006.

This application was held abandoned April 14, 2006 for failure to timely submit an appeal brief within two months of the Notice of Appeal submitted February 13, 2006. Notice of Abandonment was mailed May 25, 2006.

Petitioners assert that the Notice of Abandonment was mailed in error because the period of time for submission of the appeal brief is extendable. In accordance with 37 CFR 41.37, the period of time for submission of the appeal brief is extendible pursuant to 37 CFR 1.136. In view thereof, the Notice of Abandonment was prematurely issued.

The period of time for submission of the appeal brief remains two months from the date of submission of the Notice of Appeal, subject to extension pursuant to 37 CFR 41.37 and 37 CFR 1.136.

In view of the evidence presented, the petition to withdraw the holding of abandonment is hereby **GRANTED**.

The Notice of Abandonment is hereby **VACATED** and the holding of abandonment is **WITHDRAWN**.

The application file is being forwarded to Technology Center 3700 for further processing.

Telephone inquiries concerning this matter may be directed to the undersigned at (571) 272-3205.

Alesia M. Brown
Petitions Attorney
Office of Petitions

SPE RESPONSE FOR CERTIFICATE OF CORRECTION

DATE : 5/16/07

Paper No.: _____

TO SPE OF : ART UNIT 1644

SUBJECT : Request for Certificate of Correction on Patent No.: 6998238

A response is requested with respect to the accompanying request for a certificate of correction.

Please complete this form and return with file, within 7 days to:
Palm location **7580, Certificates of Correction Branch – South Tower – 9A22**
If response is for an IFW, **return to employee (named below) via PUBSCofC Team in MADRAS.**
With respect to the change(s) requested, correcting Office and/or Applicant's errors, should the patent read as shown in the certificate of correction (COCIN)? No new matter should be introduced, nor should the scope or meaning of the claims be changed.

Valerie Jackson

Thank You For Your Assistance

Certificates of Correction Branch
Tel. No. 703-308-9390 ext. 114

The request for issuing the above-identified correction(s) is hereby:
Note your decision on the appropriate box.

- [x] **Approved** — All changes apply. except for Col. 37, line 64
- [ ] **Approved in Part** — Specify below which changes **do not** apply.
- [ ] **Denied** — State the reasons for denial below.

Comments:

Col. 37, line 64, The "011.B" should read -- 011:B4 --

Christina Chan — SPE

1644 — Art Unit

UNITED STATES PATENT AND TRADEMARK OFFICE

Commissioner for Patents
United States Patent and Trademark Office
P.O. Box 1450
Alexandria, VA 22313-1450
www.uspto.gov

Paper No. 10

Kolisch Hartwell
520 S.W. Yamhill Street
Suite 200
Portland, OR 97204

COPY MAILED

JAN 16 2004

OFFICE OF PETITIONS

In re Application of	:	
Mike Jensen	:	
Application No. 09/557,878	:	ON PETITION
Filed: April 24, 2000	:	
Attorney Docket No. ANC 301A	:	

This is a decision on the petition under 37 CFR 1.137(b), filed November 19, 2003, to revive the above-identified application.

The petition is granted.

The above-identified application became abandoned for failure to reply in a timely manner to the non-final Office action mailed August 19, 2002, which set a shortened statutory period for reply of three months from the mailing date of the Notice. No extensions of time under the provisions of 37 CFR 1.136 have been obtained. Accordingly, the application became abandoned on November 20, 2002.

The application file is being forwarded to Technology Center AU 3623 for further processing.

Telephone inquiries concerning this decision should be directed to Latrice Bond at (703) 308-6911.

Latrice Bond

Latrice Bond
Petitions Examiner
Office of Petitions
Office of the Deputy Commissioner
for Patent Examination Policy

UNITED STATES PATENT AND TRADEMARK OFFICE

COMMISSIONER FOR PATENTS
UNITED STATES PATENT AND TRADEMARK OFFICE
P.O. BOX 1450
ALEXANDRIA, VA 22313-1450
www.uspto.gov

Donald W Marks
600 South 29th Road
Arlington VA 22202

COPY MAILED

MAY 16 2006

OFFICE OF PETITIONS

In re Application of
Bergan
Application No. 09/558,060
Filed: April 26, 2000
Attorney Docket No. 156-102
For: DATA CHECKER APPARATUS AND METHOD

Decision on Petition for Patent Term Extension

The above-identified application has been forwarded to the undersigned for consideration on the "Request For Reconsideration Of Patent Term Adjustment," which was received on March 14, 2006, for the above-identified application. See 35 U.S.C. § 154(b) and 37 C.F.R. § 1.701. Further requests or a request for reconsideration of this decision for patent term extension, must be filed under 37 CFR 1.182 or 37 CFR 1.183, and include the required fee.

The petition is dismissed.

Petitioner notes that the above-identified application was filed on April 26, 2000, a Final Office Action was mailed on November 18, 2004, a first Notice of Appeal was filed on February 18, 2004 and an Appeal Brief was filed on April 19, 2004, prosecution was reopened, Final Office Action was mailed on April 19, 2005, a second Notice of Appeal was filed on July 19, 2005 and a second Appeal Brief was filed on September 19, 2005, and the application was finally allowed on December 14, 2005. The application was allowed on December 14, 2005, but the Determination of Patent Term Extension under 35 U.S.C. 154(b) included with the Notice of Allowance in the above-identified application states that the patent term extension is zero (0) days. Petitioner asserts that patent term extension in this application is inappropriate and that the patent term should be extended by 303 days.

35 U.S.C. § 154(b)(as amended by the "Uruguay Round Agreements Act," enacted December 8, 1994, as part of Public Law 103-465) provides for patent term extension for appellate review, interference and secrecy order delays in applications filed on or after June 8, 1995 and before May 29, 2000. 35 U.S.C. § 154(b)(as amended by the "American Inventors Protection Act of 1999," enacted November 29, 1999, as part of Public Law 106-113) provides for patent term adjustment for these administrative delays and others in applications filed on or after May 29, 2000. The patent statute only permits extension of patent term based on very specific criteria. The Office has no authority to grant any extension or adjustment of the term due to administrative delays except as authorized by 35 U.S.C. § 154.

The above-identified application was filed on April 26, 2000, which is after June 8, 1995 and before May 29, 2000, and, as a result is an application that may be eligible for patent term extension under

35 U.S.C. § 154. The application was not issued due to an adverse determination of patentability by the Board of Patent Appeals and Interferences (BPAI), was not delayed due to an interference proceeding, nor was it subject to a secrecy order, as a result, this application is not eligible for the extension under 35 U.S.C. 154 and 37 CFR 1.701. The Office has no authority to grant an extension of the term due to administrative delays except as authorized by 35 U.S.C. § 154.

While Petitioner asserts that it is inappropriate for the patent term not to be extended under the circumstance, both 35 U.S.C. 154(b)(2) and 37 CFR 1.701(a)(3) require a decision by the BPAI reversing an adverse determination of patentability for the patent application to be eligible for patent term extension under 35 U.S.C. § 154. Since, the application was not issued due to an adverse determination of patentability by the BPAI, the application is not entitled to patent term extension under 35 U.S.C. 154 and 37 CFR 1.701 and the petition is dismissed.

The delay in issuance of petitioner's application is regretted.

The Petition fee has been received.

Telephone inquiries with regard to this communication should be directed to Mark O. Polutta at (571) 272-7709.

Mark O. Polutta
Senior Legal Advisor
Office of Patent Legal Administration
Office of the Deputy Commissioner
for Patent Examination Policy

UNITED STATES PATENT AND TRADEMARK OFFICE

COMMISSIONER FOR PATENTS
UNITED STATES PATENT AND TRADEMARK OFFICE
P.O. BOX 1450
ALEXANDRIA, VA 22313-1450
www.uspto.gov

Paper No. 17

LAWRENCE P. KESSLER
NEXPRESS SOLUTIONS LLC
1447 ST. PAUL ST.
ROCHESTER NY 14653-7103

COPY MAILED

DEC 2 9 2003

OFFICE OF PETITIONS

In re Application of	:	
Chen et al.	:	
Application No. 09/558,239	:	ON PETITION
Filed: 24 April, 2000	:	
Attorney Docket No. 80914/LPK	:	

This is a decision on the petition under 37 CFR 1.137(b),[1] filed on 24 November, 2003, to revive the above-identified application.

The petition is **GRANTED**.

This application became abandoned on 13 June, 2003, for failure to file a proper reply to the final Office action mailed on 12 March, 2003, which set a three (3) month statutory period for reply. No extensions of time in accordance with 37 CFR 1.136(a) were obtained. Notice of Abandonment was mailed on 7 November, 2003.

---

[1]Effective December 1, 1997, the provisions of 37 CFR 1.137(b) now provide that where the delay in reply was unintentional, a petition may be filed to revive an abandoned application or a lapsed patent pursuant to 37 CFR 1.137(b). A grantable petition filed under the provisions of 37 CFR 1.137(b) must be accompanied by:

(1) the required reply, unless previously filed. In a nonprovisional application abandoned for failure to prosecute, the required reply may be met by the filing of a continuing application. In a nonprovisional application filed on or after June 8, 1995, and abandoned for failure to prosecute, the required reply may also be met by the filing of a request for continued examination in compliance with § 1.114. In an application or patent, abandoned or lapsed for failure to pay the issue fee or any portion thereof, the required reply must be the payment of the issue fee or any outstanding balance thereof. In an application abandoned for failure to pay the publication fee, the required reply must include payment of the publication fee.

(2) the petition fee as set forth in 37 CFR 1.17(m);

(3) a statement that the entire delay in filing the required reply from the due date for the reply until the filing of a grantable petition pursuant to 37 CFR 1.137(b) was unintentional. The Commissioner may required additional information where there is a question whether the delay was unintentional; and

(4) any terminal disclaimer (and fee as set forth in 37 CFR 1.20(d)) required pursuant to 37 CFR 1.137(c)).

On 24 November, 2003, the present petition was filed, accompanied by a Request for Continued Examination (RCE). Petitioners request that an amendment after final rejection, filed on 17 October, 2003, be considered as the submission required by 37 CFR 1.114.

The application will be forwarded to Technology Center 1700 for consideration of the RCE and amendment.

Telephone inquiries concerning this matter may be directed to the undersigned at (703)308-6918.

D Wood

Douglas I. Wood
Senior Petitions Attorney
Office of Petitions

16 OCT

UNITED STATES DEPARTMENT OF COMMERCE
Patent and Trademark Office

Patent Cooperation Treaty
Legal Office

Address: Assistant Commissioner for Patents
Box PCT
Washington, D.C. 20231

Jane T. Gunnison
FISH & NEAVE
1251 Avenue of the Americas
New York, NY 10020

BEST AVAILABLE COPY

In re Application of SONNEWALD, Uwe, et al. U.S. Application No.: 09/558,284 Filing Date: 25 April 2000 Attorney's Docket No.: VOS-12 CON For: 2-DEOXYGLUCOSE-6-PHOSPHATE (2-DOG-6-P) PHOSPHOTASE DNA SEQUENCES AS SELECTION MARKERS IN PLANTS	DECISION ON PETITION TO REVIVE ABANDONED APPLICATION UNDER 37 CFR 1.137(b)

This decision is issued in response to applicants' "Letter" and attached "Petition Pursuant To 37 CFR 1.137(b) For Revival Of Abandoned Application" filed on 10 August 2000. Applicants have paid the required petition fee for the Petition For Revival.

The Letter filed by applicants states that the materials attached to the Letter, including the Petition For Revival considered herein, are true copies of materials originally filed on 25 April 2000. Attached to the Letter is a copy of a return postcard which itemizes the Petition For Revival and bears a USPTO receipt label dated 25 April 2000. Based on applicants' statements in the Letter and the return postcard, it is concluded that the Petition For Revival attached to the Letter was originally filed by applicants on 25 April 2000.

The Petition for Revival seeks to revive international application PCT/EP98/02069 abandoned under 35 U.S.C. 371(d).

All of the requirements of 37 CFR 1.137(b) for revival have been submitted. Applicant's statement that "the entire delay in filing the required application from the October 9, 1999 national phase/continuation application due date until the filing of this grantable petition under 37 CFR 1.137(b) was unintentional" satisfies the requirements of 37 CFR 1.137(b)(3).

International application PCT/EP98/02069 became abandoned as to the United States of America after midnight on 12 October 1999 for failure to pay the basic national fee (09 October 1999 was a Saturday and 11 October 1999 was a federal holiday). The filing of the present continuing application under 35 U.S.C. 111 is accepted as the appropriate response under 37 CFR 1.137(b). See MPEP § 711.03(c). International application PCT/EP98/02069 is being revived for purposes of continuity only and since continuity has been established by this decision

reviving the international application, the international application is again abandoned in favor of the present continuing application number 09/558,284.

This application is being forwarded to the Office of Initial Patent Examination for treatment as a filing under 35 U.S.C. 111(a) with a filing date of 25 April 2000.

Leonard Smith
PCT Legal Examiner
PCT Legal Office

Richard M. Ross
PCT Petitions Attorney
PCT Legal Office
Telephone: (703) 308-6155
Facsimile: (703) 308-6459

RMR/LS:rmr

UNITED STATES PATENT AND TRADEMARK OFFICE

COMMISSIONER FOR PATENTS
UNITED STATES PATENT AND TRADEMARK OFFICE
P.O. BOX 1450
ALEXANDRIA, VA 22313-1450
www.uspto.gov

MAILED

FEB 17 2004

Technology Center 2100

Paper No. 11

ANTONELLI, TERRY, STOUT & KRAUS, LLP
1300 NORTH SEVENTEENTH STREET
SUITE 1800
ARLINGTON VA 22209-9889

In re Application of: CLAUSE PEDERSEN, ET AL. Application No.: 09/558,378 Filed: April 26, 2000 For: **RADIO TERMINAL**	) **DECISION ON PETITION TO**) **WITHDRAW THE HOLDING OF**) **ABANDONMENT**)

This is in reply to Petitioner's petition to Withdraw the Holding of Abandonment under 37 CFR 1.181, filed in the United States Patent and Trademark Office on January 29, 2004. No fee is required.

A review of the file record reveals that the application was held abandoned on January 23, 2004 for failure to respond to the Office Letter dated December 03, 2002 within the Shortened Statutory Period of three months set therein.

Petitioner has submitted a copy of the response to the Office Letter, a copy of the substitute specification, and a copy of the return postcard from the USPTO. A closer review of the file record reveals that the original amendment, the original substitute specification, the IDS, and the original Petition and Fee for Extension of Time are timely filed and associated with the record.

Since a timely response to the Office Letter dated December 03, 2002 was filed, the Petition is **GRANTED**.

The application will be forwarded to the Examiner of Record for prompt action on the merits of the application.

Bot LeDynh, J.D., Ph.D.
Special Programs Examiner
Technology Center 2100
Computer Architecture, Software, and Information Security
(703) 305-0651

UNITED STATES PATENT AND TRADEMARK OFFICE

Commissioner for Patents
United States Patent and Trademark Office
P.O. Box 1450
Alexandria, VA 22313-1450
www.uspto.gov

ANTONELLI, TERRY, STOUT & KRAUS, LLP
1300 NORTH SEVENTEENTH STREET
SUITE 1800
ARLINGTON VA 22209-3873

COPY MAILED

OCT 0 2 2006

OFFICE OF PETITIONS

ON PETITION

In re Application of
Pedersen et al.
Application No.09/558,378
Filed: April 26, 2000
Title of Invention: Radio Terminal

This is a decision on the petition under 37 CFR §1.137(b), filed July 6, 2006.

This above-identified application became abandoned for failure to timely file an appeal brief and submit the accompanying fee. Applicant filed a Notice of Appeal and one month extension of time on August 22, 2005 . Pursuant to 37 CFR 41.37(a) applicant was required to file an Appeal brief two months from August 22, 2005. No further extensions of time pursuant to 37 CFR 1.136 were obtained. Accordingly, this application became abandoned on October 23, 2005. A Notice of Abandonment was mailed on January 18, 2006.

The requirements for a grantable petition under 37 CFR §1.137(b) have been met. This petition is hereby **Granted**.

The two-month period for filing an appeal brief (accompanied by the fee required by 37 CFR 41.20(b)(2)), will be the later of the two-month period set in 37 CFR 41.37(a) or one month from the mail date of the decision on the request for Pre-Appeal Brief Review.

A three (3) month extension of time was requested. However, pursuant to 37 CFR §1.136, an extension of time must be filed prior to the expiration of the maximum extendable period for reply. See In re Application of S., 8 USPQ2d 1630, 1631 (Comm'r Pats. 1988) Petitioner's five (5) month statutory period expired on March 23, 2006. Petitioner is ineligible for any extensions of time. Petitioner may request a refund of the $1,020.00 by writing to the Finance Office, Refund Section. A copy of this decision should accompany any request for refund.

The Revocation and Power of Attorney will not be entered because the title of the

person signing the 3.73(b) statement has not been provided.

The application will be forwarded to Technology Center 2100 for further processing.

Telephone inquiries concerning this matter should be directed to the undersigned at (571) 272-3215.

Charlema R. Grant
Petitions Attorney
Office of Petitions

cc: G. Peter Albert, Jr.
Foley & Lardner LLP
321 North Clark Street
Suite 2800
Chicago, Il 60610

UNITED STATES PATENT AND TRADEMARK OFFICE

COMMISSIONER FOR PATENTS
UNITED STATES PATENT AND TRADEMARK OFFICE
P.O. BOX 1450
ALEXANDRIA, VA 22313-1450
www.uspto.go

MAIL Paper No. 5

MAR 0 8 2004

DIRECTOR OFFICE
TECHNOLOGY CENTER 2600

GLENN PATENT GROUP
3475 EDISON WAY, SUITE L
MENLO PARK CA 94025

In re Application of
HEATON et al.
Application No. 09/558,410
Filed: April 24, 2000
For:

METHOD AND APPARATUS FOR CONTROLLING AT LEAST ONE SET-TOP BOX

DECISION ON REQUEST TO WITHDRAW FROM RECORD

This is a decision on the request for withdrawal as agent of record filed on January 13, 2004.

A grantable request to withdraw as attorney/agent of record must:
(1) indicate the present mailing address of the attorney(s)/agent(s) who seek(s) to withdraw, and
(2) be signed by each attorney/agent seeking to withdraw or clearly be signed on their behalf, and
(3) be *approved* at least thirty (30) days prior to the maximum extendable period for response to any outstanding Office Action, and
(4) indicate the address to which future correspondence should be mailed.

Petitioner has met all of the above. Accordingly, the request is **GRANTED**.

Attorneys/agents listed in the Request to withdraw are withdrawn.

All future communications from the Office will be directed to the address listed below until otherwise notified by applicant. Applicant is reminded of the obligation to promptly notify the Patent and Trademark Office of any change in correspondence address to ensure receipt of all communications from the Office.

The file is being returned to TC 2600 Technical Support Staff to update the correspondence address and then will be forwarded to the files repository.

Krista Zele
Special Program Examiner
Technology Center 2600
Communications
(703) 305-4701

Cc:
Hickman Palermo Truong & Becker LLP
1600 Willow Street
San Jose, CA 95125-5106

UNITED STATES PATENT AND TRADEMARK OFFICE

OFFICE OF DATA MANAGEMENT

HICKMAN PALERMO
TRUONG & BECKER LLP
2055 GATEWAY PLACE
SUITE 550
SAN JOSE, CA 95110-1089

In re Application of	:	
HEATON KURT ET AL	:	**DECISION ON PETITION**
Application No. 09/558,410	:	
Filed: April 2, 2000	:	DEC 09 2008
Attorney Docket No. TIVO0020	:	

This is a decision on the Request To Withdraw Holding of Abandonment received in the United States Patent and Trademark Office (USPTO) March 18, 2008 which is being treated as a Petition To Withdraw Holding Of Abandonment for the above-identified application.

The petition is **GRANTED**.

The application was held abandoned for failure to timely pay the issue fee as required by the Notice of Allowance and Fee(s) Due, mailed March 27, 2007 which set forth a three (3) month statutory period for reply. Accordingly, the Notice of Abandonment was mailed on January 24, 2008.

A review of the Office records indicates that the issue fee and publication fee were timely received on December 21, 2007. The Notice of Abandonment was mailed in error.

In view of the foregoing, the holding of abandonment for failure to timely pay the issue fee is hereby withdrawn and the application is restored to pending status.

Telephone inquires concerning this decision may be directed to the undersigned in the Office of Data Management at 703-308-9250 x 154.

Anita Greene
Application Assistance Unit
Office of Data Management

UNITED STATES PATENT AND TRADEMARK OFFICE

Commissioner for Patents
United States Patent and Trademark Office
Washington, D.C. 20231
www.uspto.gov

Paper No. 15

Oppenheimer Wolff & Donnelly
2029 Century Park East, Suite 3800
Los Angeles, CA 90067

COPY MAILED

OCT 1 5 2002

OFFICE OF PETITIONS

In re Application of :
Zhejie Liu et al. :
Application No. 09/558,453 : ON PETITION
Filed: April 25, 2000 :
Attorney Docket No. 15939-18 :

This is a decision on the petition under 37 CFR 1.137(b), filed September 30, 2002, to revive the above-identified application.

The petition is **GRANTED**.

The above-identified application became abandoned for failure to reply within the meaning of 37 CFR 1.113 in a timely manner to the final Office action mailed September 19, 2001, which set a shortened statutory period for reply of three (3) months. No extensions of time under the provisions of 37 CFR 1.136(a) were obtained. Accordingly, a Notice of Abandonment was mailed on June 25, 2002.

The file is being forwarded to Technology Center AU 2834 for processing the Continued Prosecution Application (CPA) filed on February 12, 2002.

Telephone inquiries concerning this decision should be directed to Latrice Bond at (703) 308-6911.

Latrice Bond

Latrice Bond
Paralegal Specialist
Office of Petitions
Office of the Deputy Commissioner
For Patent Examination Policy

SPE RESPONSE FOR CERTIFICATE OF CORRECTION

DATE : 3·17·04 **Paper No.:** 14

TO SPE OF : ART UNIT 2653 03-17-04

SUBJECT : Request for Certificate of Correction on Patent No.: RE37659

A response is requested with respect to the accompanying request for a certificate of correction.

Please complete this form and return with file, within **7** days to:
Certificates of Correction Branch - PK 3-915
Palm location **7580** - Tel. No. 305-8309

With respect to the change(s) requested, correcting Office and/or Applicant's errors, should the patent read as shown in the certificate of correction? No new matter should be introduced, nor should the scope or meaning of the claims be changed.

Recommended

Thank You For Your Assistance

Certificates of Correction Branch

The request for issuing the above-identified correction(s) is hereby:
Note your decision on the appropriate box.

- [x] **Approved** — All changes apply.
- [ ] **Approved in Part** — Specify below which changes **do not** apply.
- [ ] **Denied** — State the reasons for denial below.

Comments:

William Bayard

SPE

2653

Art Unit

UNITED STATES PATENT AND TRADEMARK OFFICE

Commissioner for Patents
United States Patent and Trademark Office
P.O. Box 1450
Alexandria, VA 22313-1450
www.uspto.gov

Steven L. Highlander
Fulbright & Jaworski, LLP
600 Congress Avenue, Suite 2400
Austin, TX 78701

COPY MAILED

OCT 31 2006

OFFICE OF PETITIONS

In re Application of :
Bristow et al. :
Application No. 09/558,472 : DECISION ON PETITION
Filed: April 25, 2000 :
Attorney Docket No. MYOG:004USD1/SLH :

This is a decision on the petition under 37 CFR 1.1.137(b), filed April 21, 2006, which is being treated as a petition under 37 CFR 1.181 to withdraw the holding of abandonment in the above-identified application.

This application was held abandoned for failure to submit a timely Appeal Brief within the two-month extendable time period from the filing of a Notice of Appeal on August 11, 2004. Accordingly, the application became abandoned on October 12, 2004. On May 17, 2005, the Office mailed a Notice of Abandonment.

Petitioners asserted that they filed a timely and proper response in the form of an Appeal Brief and an authorization to charge the Deposit Account for any necessary fees on November 15, 2004 (certificate of mailing date November 12, 2004; the first business day after Veteran's Day). Petitioners explained that an incorrect application number was placed in the heading of these documents, and therefore, they were not matched with the present application.

Upon a review of the record, it appears that the application number in the heading of the response identified Application No. "09/782,953" rather than the intended Application No. "09/558,472." The response was located in the file of Application No. 09/782,953. A review of the correspondence indicates that the USPTO received the response on November 15, 2004 (certificate of mailing date November 12, 2004; the first business day after Veteran's Day), but it was not matched with the file due to the incorrect application number.

Under current Office procedure, if a paper having an incorrect application number contains sufficient information to identify the correct application and was timely received at the Office, the holding of abandonment will be withdrawn. In reviewing the papers, it is concluded that there was sufficient information thereon to associate the papers with the present application file.

For the reasons stated above, the petition under 37 CFR 1.181 is **granted**. The Notice of Abandonment is hereby withdrawn. The $170.00 fee for filing an appeal brief paid on November 17, 2004, will be transferred from Application No. 09/782,953 to Application No. 09/558,472. The Office will also charge the $55.00 fee for an extension of time for response within the first month as requested on November 15, 2004 (certificate of mailing dated November 12, 2004). The $1,500.00 petition fee and the $500.00 fee for filing an appeal brief paid on April 21, 2006, are unnecessary and will be refunded to the Deposit Account.

The matter is being referred to the Technology Center 1632 for review of the Appeal Brief filed on November 15, 2004 (certificate of mailing dated November 12, 2004).

Telephone inquiries regarding this decision maybe directed to the undersigned at (571) 272-3211. All other questions concerning the status of the application or the examination process should be directed to the Technology Center.

C. T. Donnell

Christina Tartera Donnell
Senior Petitions Attorney
Office of Petitions

UNITED STATES PATENT AND TRADEMARK OFFICE

Commissioner for Patents
United States Patent and Trademark Office
P.O. Box 1450
Alexandria, VA 22313-1450
www.uspto.gov

PAPER NO.

Kevin S Lemack
Nields Lemack & Dingman
176 E Main Street
Suite 8
Westboro, MA 01581

COPY MAILED

JAN 24 2005

OFFICE OF PETITIONS

In re Patent No. 6,803,593	:	LETTER REGARDING
Ohishi et al.	:	PATENT TERM ADJUSTMENT
Issue Date: October 12, 2004	:	and
Application No. 09/558,562	:	NOTICE OF INTENT TO ISSUE
Filed: April 26, 2000	:	CERTIFICATE OF CORRECTION
Attorney Docket No. 463P065	:	
	:	

This is in response to the "REQUEST FOR REDUCTION OF PATENT TERM ADJUSTMENT," filed October 20, 2004, pursuant to patentees' duty of candor and good faith to the Office. Patentees state that the patent term adjustment indicated on the Notice of Issuance (and in the patent) should be 0 days instead of 91 days.

The request for reconsideration of the patent term adjustment is **GRANTED**.

The patent term adjustment indicated in the patent is to be corrected by issuance of a certificate of correction showing a revised Patent Term Adjustment of **zero (0) days**.

Patentees are given **TWO (2) MONTHS** to respond to this decision. No extensions of time will be granted under § 1.136.

The instant application became eligible for patent term adjustment under the provisions of 35 U.S.C. 154(b) by virtue of the filing of a continued prosecution application on August 27, 2002. On October 12, 2004, the instant application matured into U.S. Patent No. 6,803,593, with a revised Patent Term Adjustment of 91 days printed thereon. Patentees disclose that this period of adjustment should have been reduced pursuant to 37 CFR 1.704(c)(10) for applicant's filing of a certified copy of the Japanese patent on November 10, 2003, after the mailing of the notice of allowance on October 30, 2003.

Patentees are correct. An additional period of reduction pursuant to § 1.704(c)(10) should have been entered in this application for the filing of a certified copy of a priority document after the mailing of the notice of allowance. 37 CFR

§ 1.704(c)(10) provides that circumstances that constitute a failure to engage in reasonable efforts to conclude prosecution include:

> Submission of an amendment under § 1.312 or other paper after a notice of allowance has been given or mailed, in which case the period of adjustment set forth in § 1.703 shall be reduced by the lesser of:
>
> (i) The number of days, if any, beginning on the date the amendment under § 1.312 or other paper was filed and ending on the mailing date of the Office action or notice in response to the amendment under § 1.312 or such other paper;
>
> or
>
> (ii) Four months;

The Office's notice entitled *Clarification of 37 CFR 1.704(c)(10) - Reduction of Patent Term Adjustment for Certain Types of Papers Filed After a Notice of Allowance*, 1247 OG 111 (June 26, 2001), specifically provides that:

> the submission of other papers after a "Notice of Allowance" is mailed that do cause substantial interference and delay in the patent issue process are considered a "failure to engage in reasonable efforts" to conclude processing or examination of an application pursuant to 37 CFR 1.704(c)(10). The following are examples of such papers:
>
> (1) a request for a refund, (2) a status letter, (3) amendments under 37 CFR 1.312, (4) late priority claims, (5) a certified copy of a priority document, (6) drawings, (7) letters related to biological deposits, and (8) oaths or declarations.

A review of the record confirms that a certified copy of a priority document was filed on November 12, 2003 (not November 10, 2003), after the mailing of the notice of allowance on October 30, 2003. On September 14, 2004, the Office responded with the mailing of an acknowledgment of priority papers. Thus, a period of reduction of the lesser period of four months should have been entered in this application (the number of days beginning on the date the paper was filed, November 12, 2003, and ending on the mailing date of the Office's response, September 14, 2004, is greater than four months).

The record reveals the period of reduction for applicant delay should be further increased. The reduction of 39 days for applicant delay in filing a response to the final Office action mailed March 31, 2003 is incorrect. As the amendment filed August 8, 2003 was not in compliance with § 1.113(c)[1], the period for reply to the final rejection mailed March 31, 2003, continued to run. The proper reply, a Request for Continued Examination (RCE)[2], was not received in the Office until September 22, 2003.

---

[1] See Advisory Action mailed August 26, 2003.

[2] Petitioner is reminded that: Subject to the provisions of 35 U.S.C. 154(b) and this subpart, the term of an original patent shall be adjusted if the issuance of the patent was delayed due to the failure of the Office to

Pursuant to § 1.704(b), the patent term adjustment should have been reduced by 84 days for applicant delay from July 1, 2003 to September 22, 2003 in filing a proper reply to the final rejection.

In view thereof, the patent should have issued with a revised patent term adjustment of zero (0) days (150- 224).

As this letter was submitted as an advisement to the Office of an error in Patentees' favor, the Office will not assess the $200.00 application fee under 37 CFR 1.705(b). The Office thanks patentees for their good faith and candor in bringing this to the attention of the Office.

The application file is being forwarded to the Certificates of Correction Branch for issuance of a certificate of correction in order to rectify this error. The Office will issue a certificate of correction indicating that the term of the above-identified patent is extended or adjusted by ZERO (0) days.

Telephone inquiries specific to this matter should be directed to Nancy Johnson, Senior Petitions Attorney, at (571) 272-3219.

Karin Ferriter for

Karin Ferriter
Senior Legal Advisor
Office of Patent Legal Administration
Office of Deputy Commissioner
for Patent Examination Policy

Enclosure: Copy of DRAFT Certificate of Correction

---

issue a patent within three years after the date on which the application was filed under 35 U.S.C. 111(a) or the national stage commenced under 35 U.S.C. 371(b) or (f) in an international application, but not including: (1) Any time consumed by continued examination of the application under 35 U.S.C. 132(b).

UNITED STATES PATENT AND TRADEMARK OFFICE

COMMISSIONER FOR PATENTS
UNITED STATES PATENT AND TRADEMARK OFFICE
P.O. BOX 1450
ALEXANDRIA, VA 22313-1450
www.uspto.gov

Paper No. 26

GARDNER CARTON &
DOUGLAS, LLP
191 N. WACKER DRIVE, SUITE 3700
CHICAGO, IL 60606

COPY MAILED

FEB 27 2004

OFFICE OF PETITIONS

In re Application of Kuiken Application No. 09/558,570 Filed: April 26, 2000 Attorney Docket No. P1308USA	: : : : :	ON PETITION

This decision concerns the February 11, 2004 "Petition to Revive Unintentionally Abandoned Application Pursuant to 37 CFR 1.137(b)." The petition asserts timely reply to an Office action and is being properly treated as a petition under 37 CFR 1.181 to withdraw the holding of abandonment in this application.

The petition is **GRANTED.**

The application was held abandoned on September 11, 2003 for failure to timely submit a proper reply to the June 10, 2003 non-final Office Action.

The instant petition contends that a reply, in the form of an amendment, was transmitted to the Examiner by facsimile on August 14, 2003.

Upon review of the petition and accompanying exhibits, the Office agrees that an amendment was indeed timely filed on August 14, 2003 as asserted. Accordingly, the application should not have been held abandoned on September 11, 2003.

The holding of abandonment in this application is hereby withdrawn, and the January 30, 2004 Notice of Abandonment vacated. The petition is thus granted.

No petition fee is owed, and none was charged to counsel's deposit account.

The application file is being returned to Technology Center 3700 for further examination.

Telephone inquiries should be directed to the undersigned at (703) 308-0763.

RC Tang
Petitions Attorney
Office of Petitions

SPE: J. Hofsass

SPE RESPONSE FOR CERTIFICATE OF CORRECTION

Paper No.: _____

DATE : 8/6/07

TO SPE OF : ART UNIT 2612

SUBJECT : Request for Certificate of Correction for Appl. No.: 09/558,581 Patent No.: 6806812

Please respond to this request for a certificate of correction within 7 days.

Please review the requested changes/corrections as shown in the **COCIN** document(s) in the IFW application image. No new matter should be introduced, nor should the scope or meaning of the claims be changed.

Please complete the response (see below) and forward the completed response to scanning using document code **COCX**.

Lamonte M. Newsome
Certificates of Correction Branch
703-308-9390 ext. 112

Thank You For Your Assistance

The request for issuing the above-identified correction(s) is hereby:
Note your decision on the appropriate box.

- ☑ **Approved** — All changes apply.
- ☐ **Approved in Part** — Specify below which changes **do not** apply.
- ☐ **Denied** — State the reasons for denial below.

Comments: _____

DANIEL WU
SUPERVISORY PATENT EXAMINER
SPE

2612
Art Unit

UNITED STATES PATENT AND TRADEMARK OFFICE

Commissioner for Patents
United States Patent and Trademark Office
P.O. Box 1450
Alexandria, VA 22313-1450
www.uspto.gov
DIW 07-04

Paper No. 9

FAY SHARPE FAGAN MINNICH & MCKEE LLP
1100 SUPERIOR AVENUE
SEVENTH FLOOR
CLEVELAND OH 44114-2518

COPY MAILED

JUL 2 3 2004

OFFICE OF PETITIONS

In re Application of: :
Calabrese et al. :
Application No. 09/558,613 : ON PETITION
Filed: 26 April, 2000 :
Attorney Docket No. Calabrese 10-3-7-16 :

This is a decision on the petition filed on 15 June, 2004, which is treated as a petition under 37 C.F.R. § 1.183,[1] requesting expungement of the original specification of this application.

The petition is **DISMISSED**.

Petitioners request that the original specification and claims be expunged because the specification and claims differ from what applicant believes were the specification and claims filed with the original application papers. In particular, petitioners assert that "the 35-page specification, claims, and abstract ... from the PTO file history does not match the originally-filed 30 page specification, claims, and abstract."

RULES

37 CFR 1.59 states, in pertinent part:

(a)(1) Information in an application will not be expunged, except as provided in paragraph (b) of this section.

(2) Information forming part of the original disclosure (i.e., written specification including the claims, drawings, and any preliminary amendment specifically incorporated into an oath or declaration under §§ 1.63 and 1.175) will not be expunged from the application file.

---

[1] "A petition to expunge a part of the original disclosure must be filed under 37 C.F.R. §1.183, since such a request requires a waiver of the requirements of 37 C.F.R. §1.59(a)." *M.P.E.P. 724.05(IV).*

37 CFR 1.183 states that suspension of the rules may be granted in an "extraordinary situation, when justice requires".

ANALYSIS

The facts presented on the record do not establish an extraordinary situation. Petitioners have not established any special circumstances or equities that would require suspension of the rules in the interests of justice.

Petitions to expunge information forming part of the original disclosure must explain why justice requires waiver of the rules to permit the requested material to be expunged. These petitions are not normally decided in favor of the petitioner. Part of the reason is that "[t]he original disclosures of applications are scanned for record keeping purposes. Accordingly, the grant of a petition to expunge information which is part of the original disclosure would require that the PTO record of the originally filed application be changed, which may not be possible."[2]

The arguments have been considered, but are not persuasive. The U.S. Patent and Trademark Office (Office) file is the official record of the papers originally filed in this application. A review of the papers originally filed reveals that 35 pages of specification, including 54 claims and one (1) page of abstract, were filed on 26 April, 2000.

An applicant alleging that a paper was filed in the Office and later misplaced has the burden of proving the allegation by a preponderance of the evidence. Where the records of the Office (e.g. the file of the application) contain any document(s) or fee(s) corresponding to the contents of the correspondence at issue, the Office will rely upon its official record of the contents of such correspondence in the absence of convincing evidence (e.g. a postcard receipt under MPEP 503 containing specific itemization of the document(s) or fee(s) purported to have been filed with the correspondence at issue) that the Office received and misplaced any document(s) or fee(s) that is not among the official records of the Office. If a new application is being filed, all parts of the application being submitted should be separately listed on the postcard, *e.g.*, the number of pages of specification (including written description, claims and abstract) number of claims, number of sheets of drawings, number of pages of oath/declaration. The postcard receipt will not

---

[2] *Id.*

serve as *prima facie* evidence of receipt of any item which is not adequately itemized on the postcard.[3]

In summary, the contents of the USPTO application file constitute the official record of what was filed in an application. Absent sufficient proof to the contrary, the USPTO will rely upon the written record as evidence of what was filed in the application. In the present situation, petitioners have provided no proof that the 35 pages of specification, including 54 claims and one (1) page of abstract, located in the official file are not the application papers received on 26 April, 2000. Absent evidence to the contrary (*i.e.*, an itemized return receipt postcard), petitioners have no proof that the application papers in the file are different from the papers which petitioners filed. The mere fact that the papers constituting the original disclosure differ from what applicant believes he filed does not, in itself, constitute extraordinary circumstances where justice requires waiver of the rule.

Furthermore, the mere fact that the application papers in this application may be identical or similar to the application papers filed in another application is not persuasive evidence that the USPTO mishandled the application papers filed in this case. Rather, the evidence suggests that applicant may have inadvertently misfiled papers in the present application.

The petition is dismissed without prejudice to reconsideration pending submission of an itemized postcard or other persuasive evidence supporting petitioners' contention that 30 pages of specification, including 56 claims and one (1) page of abstract, were filed on 26 April, 2000.

By mail: Mail Stop Petition
Commissioner for Patents
P.O. Box 1450
Alexandria, VA 22313-1450

By FAX: (703) 872-9306
Attn: Office of Petitions

---

[3] MPEP 503.

By hand: U.S. Patent and Trademark Office
220 20th Street S.
Customer Window, Mail Stop Petition
Crystal Plaza 2, Lobby, Room 1B03
Arlington, VA 22202

Telephone inquiries related to this decision should be directed to the undersigned at 703-308-6918.

D Wood

Douglas I. Wood
Senior Petitions Attorney
Office of Petitions

UNITED STATES PATENT AND TRADEMARK OFFICE

Commissioner for Patents
United States Patent and Trademark Office
P.O. Box 1450
Alexandria, VA 22313-1450
www.uspto.gov
DIW 08-04

Paper No. 11

FAY SHARPE FAGAN MINNICH & MCKEE LLP
1100 SUPERIOR AVENUE
SEVENTH FLOOR
CLEVELAND OH 44114-2518

COPY MAILED
SEP 0 2 2004
OFFICE OF PETITIONS

In re Application of:
Calabrese et al.
Application No. 09/558,613
Filed: 26 April, 2000
Attorney Docket No. Calabrese 10-3-7-16

ON PETITION

This is a decision on the renewed petition, filed on 26 August, 2004, which is treated as a petition under 37 CFR 1.53 requesting that the above-identified application be processed with 30 pages of specification, including the claims and one (1) page containing the abstract, as the original disclosure.

The petition is **GRANTED**.

Petitioners assert that the specification filed with the original application papers has been misplaced in the USPTO, and that the specification contained in the original USPTO file is not the specification that applicants filed on 26 April, 2000. Specifically, petitioners assert that the application as filed consisted of 30 pages of specification, including the claims and one (1) page containing the abstract, while the specification which contained in the USPTO file consists of 35 pages.

In support, petitioners have provided an itemized postcard receipt, bearing an Office-date stamp of 04/26/00 and the above-identified application number, identifying the application by first named inventor's name and invention title, and itemizing the filing of 30 pages of specification, claims, and abstract. Petitioners have also provided a copy of the 30 pages of specification, including claims and one (1) page of abstract, asserted to have been filed on 26 April, 2000.

A review of the official record reveals that 35 pages of specification entitled "Apparatus, Method, and System for Providing Conditional Answering in Multiple Leg Telecommunication Systems" is located therein. However, the invention title as listed on the itemized cover sheet filed with the original application papers and the itemized postcard receipt provided on 15 June, 2004, is "Apparatus, Method and System for Maintaining Call Control at a Gateway Mobile Switching Center Utilizing a Packet Network."

In view of the above, the evidence is persuasive that 30 pages of specification entitled "Apparatus, Method and System for Maintaining Call Control at a Gateway Mobile Switching Center Utilizing a Packet Network" were filed on 26 April, 2000, with the present application, but that the 30 pages of specification were misplaced after receipt in the USPTO, and the application was not processed with the intended specification.

The 35 pages of specification entitled "Apparatus, Method, and System for Providing Conditional Answering in Multiple Leg Telecommunication Systems" will be not be considered part of the original disclosure. The 35 pages will not be processed or examined, but will be retained in the application file.

The application will be reprocessed with a filing date of 26 April, 2000, using the 30 pages of specification entitled "Apparatus, Method and System for Maintaining Call Control at a Gateway Mobile Switching Center Utilizing a Packet Network" supplied on 15 June, 2004.

In light thereof, the examiner may wish to reconsider the Office action mailed on 15 March, 2004.

As the petition resulted from an error on the part of the USPTO, the petition fee of $130.00 paid with the petition filed on 15 June, 2004, will be credited to counsel's deposit account, No. 06-0308, as authorized.

The application is being forwarded to the Office of Initial Patent Examination for reprocessing with a filing date of 26 April, 2000, using the application papers filed on that date and the 30 pages of specification, including one (1) page of abstract, supplied with the original petition. Thereafter, the application will be forwarded to Technology Center 2600 for further processing.

Telephone inquiries related to this decision should be directed to the undersigned at 703-308-6918.

DWood

Douglas I. Wood
Senior Petitions Attorney
Office of Petitions

UNITED STATES PATENT AND TRADEMARK OFFICE

COMMISSIONER FOR PATENTS
UNITED STATES PATENT AND TRADEMARK OFFICE
P.O. BOX 1450
ALEXANDRIA, VA 22313-1450
www.uspto.gov

Mailed: AUG 12 2004

wak
Paper No. #17

In re application of
Alexander Kaplan et al.
Serial No. 09/558,645
Filed: April 26, 2000
For: CATHODE FOR AIR ASSISTED BATTERY

DECISION ON
PETITION

This is a decision on the PETITION TO WITHDRAW HOLDING OF ABANDONMENT, filed August 8, 2003, for failure to timely reply to the Office action dated December 24, 2002.

DECISION

Since petitioner asserts that the Office action was never received, the request qualifies as a petition under 37 C.F.R. 1.181 (no fee). A review of the petitioner's evidence indicates that the request has merit. The evidence presented is sufficient to establish that the applicant did receive the Office letter, mailed December 24, 2002 and replied March 24, 2003. Therefore, the abandonment is hereby withdrawn, and the application is returned to pending status. The application shall be forwarded to the examiner for consideration of the response filed March 24, 2003.

The term of a patent issuing from a utility or plant application filed on or after June 8, 1995 ends on the date that is twenty years from the filing date of the application, or the earliest filing date for which a benefit is claimed under 35 U.S.C.§ 120, 121, or 365(c). Utility and plant applications filed on or after May 29, 2000, however, are eligible for patent term adjustment under the American Inventors Protection Act of 1999 (AIPA). Therefore, if a petition to withdraw a holding of abandonment is not filed within two months from the mailing date of the notice of abandonment, any patent term adjustment will be reduced under the provisions of 37 CFR 1.704(c)(4). If applicant does not receive the notice of abandonment, any patent term adjustment may be reduced under the provisions of 37 CFR 1.704(a)by a period equal to the period of time during which the applicant "failed to engage in reasonable efforts to conclude prosecution "(processing or examination)of the application, in which case any period of adjustment shall be reduced by the number of days, if any, beginning on the day after the date that is twelve months from the date of applicant 's filing or submission of correspondence with the USPTO for which further action by the USPTO can reasonably be expected and ending on the filing date of a grantable petition to withdraw the holding of abandonment.

Therefore, the Petition is **GRANTED.**

Jacqueline Stone, Director
Technology Center 1700
Chemical and Materials Engineering

Robert C. Nabinger
Fish & Richardson P.C.
225 Franklin Street
Boston, MA 02110-2804

UNITED STATES PATENT AND TRADEMARK OFFICE

COMMISSIONER FOR PATENTS
UNITED STATES PATENT AND TRADEMARK OFFICE
WASHINGTON, D.C. 20231
www.uspto.gov

Paper No. 3

Thomas F. Woods
MEDTRONIC, INC.
7000 Central Avenue N.E.
Minneapolis, Minnesota 55432

COPY MAILED

MAY 11 2001

**SPECIAL PROGRAMS OFFICE
DAC FOR PATENTS**

In re Application of :
Norris et al. :
Application No. 09/558,871 :
Filed: April 28, 2000 :
Attorney Docket No. P-8873 :

ON PETITION

This is a decision on the petition under 37 CFR 1.137(b), filed January 22, 2001, to revive the above-identified application.

The petition is **GRANTED**.

This application became abandoned for failure to timely reply to the Notice of Missing Parts mailed June 30, 2000. Accordingly, this application became abandoned on August 31, 2000.

The statement of unintentional delay presented in the petition does not comply with the current rule. Effective December 1, 1997, 37 CFR 1.137(b)(3) requires a statement that "the entire delay in filing the required reply from the due date for the reply until the filing of a grantable petition pursuant to 37 CFR 1.137(b) was unintentional" be submitted. However, the statement presented will be accepted and construed as meaning that "the entire delay in filing the required reply from the due date for the reply until the filing of a grantable petition pursuant to 37 CFR 1.137(b) was unintentional." If this is an incorrect interpretation in view of the rules, petitioner is required to provide a statement to that effect.

The file is being forwarded to Office of Initial Patent Examination.

Telephone inquiries concerning this matter may be directed to Lesley D. Morris at (703) 306-0028.

Edward J. Tannouse
Petitions Attorney
Office of Petitions
Office of the Deputy Commissioner
for Patent Examination Policy

UNITED STATES PATENT AND TRADEMARK OFFICE

Commissioner for Patents
United States Patent and Trademark Office
P.O. Box 1450
Alexandria, VA 22313-1450
www.uspto.gov

Paper No. 9

Garlick, Harrison & Markison LLP
P.O. Box 160727
Austin TX 78716

COPY MAILED

SEP 20 2004

OFFICE OF PETITIONS

ON PETITION

In re Application of
Margules
Application No. 09/558,901
Filed: April 26, 2000
Attorney Docket No. SIG980508

This is a decision on the petition under 37 CFR 1.137(b), filed August 12, 2004, to revive the above-identified application.

The petition is **granted.**

This application became abandoned for failure to timely reply within three months to the non-final Office action mailed November 24, 2004. No extensions of time under the provisions of 37 CFR 1.136(a) were obtained. Accordingly, this application became abandoned on February 25, 2004.

The instant petition requests revival of the application. Petitioner has met the requirements to revive the above-identified application pursuant to 37 CFR 1.137(b). Therefore, the petition is granted and the application is revived.

37 CFR 1.137(b)(3) requires a statement that the entire delay in filing the required reply from the due date for the reply until the filing of a grantable petition pursuant to 37 CFR 1.137(b) was unintentional. If the statement contained in the instant petition varies from the language required by 37 CFR 1.137(b)(3), the statement contained in the instant petition is being construed as the statement required by 37 CFR 1.137(b)(3) and petitioner must notify the Office if this is **not** a correct interpretation of the statement contained in the instant petition.

The file is now being forwarded to Technology Center Art Unit 2637 for entry and consideration of the amendment filed on August 12, 2004.

Telephone inquiries may be directed to Petitions Attorney Steven Brantley at (703) 306-5683 prior to September 27, 2004, and (571) 272-3203 thereafter.

Charles Steven Brantley
Petitions Attorney
Office of Petitions

UNITED STATES PATENT AND TRADEMARK OFFICE

COMMISSIONER FOR PATENTS
UNITED STATES PATENT AND TRADEMARK OFFICE
WASHINGTON, D.C. 20231
www.uspto.gov

MAIL

Paper No. 7

JUL 0 5 2001

DIRECTOR OFFICE
TECHNOLOGY CENTER 2100

Pennie & Edmonds, LLP
3300 Hillview Avenue
Palo Alto, California 94304

In re Application of: John A. Kembel et al.)
Application No. 09/558,922) **DECISION ON REQUEST FOR**
Filed: April 26, 2000) **WITHDRAWAL AS ATTORNEY**
For: APPARATUS AND METHOD OF)
HOSTING INTERNET CONTENT)

This is a decision on the Request To Withdraw from Representation filed June 26, 2001.

A grantable request to withdraw as attorney of record should indicate thereon the present mailing addresses of the attorney(s) who is/are withdrawing from the record and of the applicant. The request for withdrawal must be signed by every attorney seeking to withdraw or contain a clear indication that one attorney is signing on behalf of another/others. A request to withdraw will not be approved unless at least 30 (thirty) days would remain between the date of approval and the later of the expiration date of a time to file a response or the expiration date of the maximum time period which can be extended under 37 C.F.R. § 1. 136(a). The effective date of withdrawal being the date of decision and not the date of request. See M.P.E.P. § 402.06. 37 C.F.R. § 1.36 further requires that the applicant or patent owner be notified of the withdrawal of the attorney or agent.

The request is **GRANTED**.

Because no request was made for a change in correspondence address, all future communications from the Office will ***continue to be directed to the above-listed address*** until otherwise notified by applicant. Applicant is reminded of the obligation to promptly notify the Office of any change in correspondence address to ensure receipt of all communications from the Office.

Pinchus M. Laufer

Pinchus M. Laufer
Special Programs Examiner
Technology Center 2100
Computer Architecture, Software, and Electronic Commerce
(703) 306-4160

cc: William S. Galliani
Cooley Godward, LLP
Five Palo Alto Square
Palo Alto, California 94306-2155

UNITED STATES PATENT AND TRADEMARK OFFICE

COMMISSIONER FOR PATENTS
UNITED STATES PATENT AND TRADEMARK OFFICE
WASHINGTON, D.C. 20231
www.uspto.gov

MAIL

Paper No. 7

AUG 0 7 2001

DIRECTOR OFFICE
TECHNOLOGY CENTER 2100

Pennie & Edmonds, LLP
3300 Hillview Avenue
Palo Alto, California 94304

In re Application of: John A. Kembel et al.
Application No. 09/558,924
Filed: April 26, 2000
For: APPARATUS AND METHOD OF TRACING THE DISTRIBUTION OF DIVERSELY SOURCED INTERNET CONTENT

DECISION ON REQUEST FOR WITHDRAWAL AS ATTORNEY

This is a decision on the Request To Withdraw from Representation filed June 26, 2001.

A grantable request to withdraw as attorney of record should indicate thereon the present mailing addresses of the attorney(s) who is/are withdrawing from the record and of the applicant. The request for withdrawal must be signed by every attorney seeking to withdraw or contain a clear indication that one attorney is signing on behalf of another/others. A request to withdraw will not be approved unless at least 30 (thirty) days would remain between the date of approval and the later of the expiration date of a time to file a response or the expiration date of the maximum time period which can be extended under 37 C.F.R. § 1. 136(a). The effective date of withdrawal being the date of decision and not the date of request. See M.P.E.P. § 402.06. 37 C.F.R. § 1.36 further requires that the applicant or patent owner be notified of the withdrawal of the attorney or agent.

The request is **GRANTED**.

Because no request was made for a change in correspondence address, all future communications from the Office will ***continue to be directed to the above-listed address*** until otherwise notified by applicant. Applicant is reminded of the obligation to promptly notify the Office of any change in correspondence address to ensure receipt of all communications from the Office.

Pinchus M. Laufer
Special Programs Examiner
Technology Center 2100
Computer Architecture, Software, and Electronic Commerce
(703) 306-4160

cc: William S. Galliani
Cooley Godward, LLP
Five Palo Alto Square
Palo Alto, California 94306-2155

UNITED STATES PATENT AND TRADEMARK OFFICE

COMMISSIONER FOR PATENTS
UNITED STATES PATENT AND TRADEMARK OFFICE
WASHINGTON, D.C. 20231
www.uspto.gov

MAIL

Paper No. 8

JUL 0 5 2001

DIRECTOR OFFICE
TECHNOLOGY CENTER 2100

Pennie & Edmonds, LLP
3300 Hillview Avenue
Palo Alto, California 94304

In re Application of: John Kembel et al.
Application No. 09/558,925
Filed: April 26, 2000
For: APPARATUS AND METHOD FOR INTERACTING WITH INTERNET CONTENT

DECISION ON REQUEST FOR WITHDRAWAL AS ATTORNEY

This is a decision on the Request To Withdraw from Representation filed June 26, 2001.

A grantable request to withdraw as attorney of record should indicate thereon the present mailing addresses of the attorney(s) who is/are withdrawing from the record and of the applicant. The request for withdrawal must be signed by every attorney seeking to withdraw or contain a clear indication that one attorney is signing on behalf of another/others. A request to withdraw will not be approved unless at least 30 (thirty) days would remain between the date of approval and the later of the expiration date of a time to file a response or the expiration date of the maximum time period which can be extended under 37 C.F.R. § 1. 136(a). The effective date of withdrawal being the date of decision and not the date of request. See M.P.E.P. § 402.06. 37 C.F.R. § 1.36 further requires that the applicant or patent owner be notified of the withdrawal of the attorney or agent.

The request is **GRANTED**.

Because no request was made for a change in correspondence address, all future communications from the Office will ***continue to be directed to the above-listed address*** until otherwise notified by applicant. Applicant is reminded of the obligation to promptly notify the Office of any change in correspondence address to ensure receipt of all communications from the Office.

Pinchus M. Laufer
Special Programs Examiner
Technology Center 2100
Computer Architecture, Software, and Electronic Commerce
(703) 306-4160

cc: William S. Galliani
Cooley Godward, LLP
Five Palo Alto Square
Palo Alto, California 94306-2155

UNITED STATES PATENT AND TRADEMARK OFFICE

COMMISSIONER FOR PATENTS
UNITED STATES PATENT AND TRADEMARK OFFICE
P.O. BOX 1450
ALEXANDRIA, VA 22313-1450
www.uspto.gov

COPY MAILED

OCT 0 2 2006

OFFICE OF PETITIONS

AKA CHAN LLP
900 LAFAYETTE STREET
SUITE 710
SANTA CLARA, CA 95050

In re Application of :
Kepecs : DECISION ON PETITION
Application No. 09/558,945 :
Filed: April 26, 2000 :
Atty. Dkt. No.: 018477-000510US :

This is a decision on the petition under 37 CFR 1.137(b), filed August 29, 2006, to revive the above-identified application.

The petition is **DISMISSED AS MOOT**.

A final Office action was mailed in the above-identified application on December 6, 2005. A Notice of Appeal along with three month extension of time were timely filed June 6, 2006. An appeal brief was due on or before August 6, 2006. However, the period of time for submission of the appeal brief is extendible. Accordingly, the instant petition is moot as petitioner may file a petition for extension of time.

Petitioner may request a refund of the previously submitted petition for extension of time fee. The fee having been submitted by credit card, the undersigned is without authority to refund the fee or convert the fee to an extension of time fee. Petitioner is advised that the time period for extension continues to run from the file date of the Notice of Appeal, petitioner may request up to five months extension from the date the Notice of Appeal was filed. 37 CFR 1.136(a). In any event, petitioner may submit a request for refund by writing to the Finance Section, Refund Section. Any request for refund should include a copy of the instant decision.

This application is being forwarded to Technology Center 3600 for further processing and to await submission of the required extension of time. Absent timely submission of an extension of time, the application will become abandoned.

Telephone inquiries concerning this matter may be directed to the undersigned at (571) 272-3205.

Alesia M. Brown
Petitions Attorney
Office of Petitions

UNITED STATES PATENT AND TRADEMARK OFFICE

Commissioner for Patents
United States Patent and Trademark Office
P.O. Box 1450
Alexandria, VA 22313-1450
www.uspto.gov

KATTEN MUCHIN ZAVIS ROSEMAN
575 MADISON AVENUE
NEW YORK, NY 10022-2585

COPY MAILED

FEB 23 2005

OFFICE OF PETITIONS

ON PETITION

In re Application of :
Tetsu Sugaya et al :
Application No. 09/558,954 :
Filed: April 26, 2000 :
Attorney Docket No. FUJI 17.289 (100794-11404) :

This is a decision on the petition under 37 CFR 1.137(b), filed February 3, 2005, to revive the above-identified application.

The petition is **GRANTED.**

The above-identified application became abandoned for failure to reply in a timely manner to the final Office action mailed April 15, 2004, which set a shortened statutory period for reply of three (3) months. Two months extensions of time under the provision of 37 CFR 1.136(a) were obtained. Accordingly, the above-identified application became abandoned on September 16, 2004.

The above-identified application is being revived solely for purposes of continuity with a Request For Continued Examination (RCE) filed on February 3, 2005.

Telephone inquiries concerning this decision should be directed to Irvin Dingle at (571) 272-3210.

This matter is being forwarded to Technology Center AU 2665 for further processing.

Irvin Dingle
Petitions Examiner
Office of Petitions
Office of the Deputy Commissioner
for Patent Examination Policy

UNITED STATES PATENT AND TRADEMARK OFFICE

Commissioner for Patents
United States Patent and Trademark Office
P.O. Box 1450
Alexandria, VA 22313-1450
www.uspto.gov
DIW May-05

WINSTEAD SECHREST & MINICK
P.O. BOX 50784
DALLAS TX 75201

COPY MAILED

MAY 27 2005

OFFICE OF PETITIONS

In re Application of	:	
Furrukh Fahim	:	
Application No. 09/558,962	:	DECISION ON PETITION
Filed: 25 April, 2000	:	
Atty Docket No. 43743-P001US	:	

This is a decision on the petition filed on 20 April, 2005, under 37 CFR 1.137(b)[1], to revive the above-identified application.

The petition is **GRANTED**.

The application became abandoned on 18 February, 2005, for failure to timely file corrected drawings as required by the Notice of Allowability mailed on 17 November, 2004, which set a

---

[1]Effective December 1, 1997, the provisions of 37 CFR 1.137(b) now provide that where the delay in reply was unintentional, a petition may be filed to revive an abandoned application or a lapsed patent pursuant to 37 CFR 1.137(b). A grantable petition filed under the provisions of 37 CFR 1.137(b) must be accompanied by:

(1) the required reply, unless previously filed. In a nonprovisional application abandoned for failure to prosecute, the required reply may be met by the filing of a continuing application. In a nonprovisional application filed on or after June 8, 1995, and abandoned for failure to prosecute, the required reply may also be met by the filing of a request for continued examination in compliance with § 1.114. In an application or patent, abandoned or lapsed for failure to pay the issue fee or any portion thereof, the required reply must be the payment of the issue fee or any outstanding balance thereof.

(2) the petition fee as set forth in 37 CFR 1.17(m);

(3) a statement that the entire delay in filing the required reply from the due date for the reply until the filing of a grantable petition pursuant to 37 CFR 1.137(b) was unintentional. The Commissioner may required additional information where there is a question whether the delay was unintentional; and

(4) any terminal disclaimer (and fee as set forth in 37 CFR 1.20(d)) required pursuant to 37 CFR 1.137(c)).

three (3)-month statutory period for reply. The filing of the present petition precedes the mailing of Notice of Abandonment.

Petitioner has now filed corrected drawings.

This application is being referred to the Publishing Division for processing into a patent.

Telephone inquiries concerning this matter may be directed to the undersigned at (571) 272-3231.

Douglas I. Wood
Senior Petitions Attorney
Office of Petitions

UNITED STATES PATENT AND TRADEMARK OFFICE

COMMISSIONER FOR PATENTS
UNITED STATES PATENT AND TRADEMARK OFFICE
WASHINGTON, D.C. 20231
www.uspto.gov

Paper No. 10

MARK K JOHNSON
P O BOX 510644
NEW BERLIN, WI 53151-0644

COPY MAILED

AUG 1 7 2001

OFFICE OF PETITIONS

In re Application of :
Alexander V. Sokoloff et al :
Application No. 09/559,021 :
Filed: April 27, 2000 :
Attorney Docket No. MIRUS.014.02 :

ON PETITION

This is a decision on the petition under 37 CFR 1.137(b), filed August 3, 2001, to revive the above-identified application.

The petition is **GRANTED**.

The above-identified application became abandoned for failure to reply in a timely manner to the non-final Office action mailed December 19, 2000, which set a shortened statutory period for reply of three (3) months. No extensions of time under the provisions of 37 CFR 1.136(a) were obtained. Accordingly, the above-identified application became abandoned on March 20, 20001.

Telephone inquiries concerning this decision should be directed to Wan Laymon at (703) 305-9282.

The application file is being forwarded to Technology Center AU 1636.

Wan Laymon

Wan Laymon
Petitions Examiner
Office of Petitions
Office of the Deputy Commissioner
for Patent Examination Policy

Under the Paperwork Reduction Act of 1995, no persons are required to respond to a collection of information unless it displays valid OMB control number.

PETITION TO ACCEPT UNINTENTIONALLY DELAYED PAYMENT OF MAINTENANCE FEE IN AN EXPIRED PATENT (37 CFR 1.378(c))

Patent Number	Issue Date (YYYY-MM-DD)	Application Number	Filing Date (YYYY-MM-DD)	Docket Number (if applicable)
6,650,877	2003-11-18	09/559,031	2000-04-27	

CAUTION: Maintenance fee (and surcharge, if any) payment must correctly identify: (1) the patent number and (2) the application number of the actual U.S. application leading to issuance of that patent to ensure the fee(s) is/are associated with the correct patent. 37 CFR 1.366(c) and (d).

SMALL ENTITY
☒ Patentee claims, or has previously claimed, small entity status. See 37 CFR 1.27.

LOSS OF ENTITLEMENT TO SMALL ENTITY STATUS
☐ Patentee is no longer entitled to small entity status. See 37 CFR 1.27(g)

NOT Small Entity		Small Entity	
Fee	Code	Fee	Code
○ 3 ½ year	(1551)	◉ 3 ½ year	(2551)
○ 7 ½ year	(1552)	○ 7 ½ year	(2552)
○ 11 ½ year	(1553)	○ 11 ½ year	(2553)

SURCHARGE
The surcharge required by 37 CFR 1.20(i)(2) (Fee Code 1558) must be paid as a condition of accepting unintentionally delayed payment of the maintenance fee.

MAINTENANCE FEE (37 CFR 1.20(e)-(g))
The appropriate maintenance fee must be submitted with this petition.

STATEMENT
THE UNDERSIGNED CERTIFIES THAT THE DELAY IN PAYMENT OF THE MAINTENANCE FEE TO THIS PATENT WAS UNINTENTIONAL

PETITIONER(S) REQUEST THAT THE DELAYED PAYMENT OF THE MAINTENANCE FEE BE ACCEPTED AND THE PATENT REINSTATED

THIS PORTION MUST BE COMPLETED BY THE SIGNATORY OR SIGNATORIES

37 CFR 1.378(d) states: "Any petition under this section must be signed by an attorney or agent registered to practice before the Patent and Trademark Office, or by the patentee, the assignee, or other party in interest."

I certify, in accordance with 37 CFR 1.4(d)(4) that I am

◉ An attorney or agent registered to practice before the Patent and Trademark Office

○ A sole patentee

○ A joint patentee; I certify that I am authorized to sign this submission on behalf of all the other patentees.

○ A joint patentee; all of whom are signing this e-petition

○ The assignee of record of the entire interest

Patent Practitioner			
A signature of the applicant or representative is required in accordance with 37 CFR 1.33 and 10.18. Please see 37 CFR 1.4(d) for the form of the signature			
Signature	/Kevin D. Wills/	Date (YYYY-MM-DD)	2007-12-23
Name	Kevin D. Wills	Registration Number	43993

This collection of information is required by 37 CFR 1.378(c). The information is required to obtain or retain a benefit by the public which is to file (and by the USPTO to process) an application. Confidentiality is governed by 35 U.S.C. 122 and 37 CFR 1.11 and 1.14. This collection is estimated to take 1 hour to complete, including gathering, preparing, and submitting the completed application form to the USPTO. Time will vary depending upon the individual case. Any comments on the amount of time you require to complete this form and/ or suggestions for reducing this burden, should be sent to the Chief Information Officer, U.S. Patent and Trademark Office, U.S. Department of Commerce, P.O. Box 1450, Alexandria, VA 22313-1450. DO NOT SEND FEES OR COMPLETED FORMS TO THIS ADDRESS. **This form can only be used when in conjunction with EFS-Web. If this form is mailed to the USPTO, it may cause delays in reinstating the patent.**

Privacy Act Statement

The Privacy Act of 1974 (P.L. 93-579) requires that you be given certain information in connection with your submission of the attached form related to a patent application or patent. Accordingly, pursuant to the requirements of the Act, please be advised that: (1) the general authority for the collection of this information is 35 U.S.C. 2(b)(2); (2) furnishing of the information solicited is voluntary; and (3) the principal purpose for which the information is used by the U.S. Patent and Trademark Office is to process and/or examine your submission related to a patent application or patent. If you do not furnish the requested information, the U.S. Patent and Trademark Office may not be able to process and/or examine your submission, which may result in termination of proceedings or abandonment of the application or expiration of the patent.

The information provided by you in this form will be subject to the following routine uses:

1. The information on this form will be treated confidentially to the extent allowed under the Freedom of Information Act (5 U.S.C. 552) and the Privacy Act (5 U.S.C. 552a). Records from this system of records may be disclosed to the Department of Justice to determine whether the Freedom of Information Act requires disclosure of these record s.

2. A record from this system of records may be disclosed, as a routine use, in the course of presenting evidence to a court, magistrate, or administrative tribunal, including disclosures to opposing counsel in the course of settlement negotiations.

3. A record in this system of records may be disclosed, as a routine use, to a Member of Congress submitting a request involving an individual, to whom the record pertains, when the individual has requested assistance from the Member with respect to the subject matter of the record.

4. A record in this system of records may be disclosed, as a routine use, to a contractor of the Agency having need for the information in order to perform a contract. Recipients of information shall be required to comply with the requirements of the Privacy Act of 1974, as amended, pursuant to 5 U.S.C. 552a(m).

5. A record related to an International Application filed under the Patent Cooperation Treaty in this system of records may be disclosed, as a routine use, to the International Bureau of the World Intellectual Property Organization, pursuant to the Patent Cooperation Treaty.

6. A record in this system of records may be disclosed, as a routine use, to another federal agency for purposes of National Security review (35 U.S.C. 181) and for review pursuant to the Atomic Energy Act (42 U.S.C. 218(c)).

7. A record from this system of records may be disclosed, as a routine use, to the Administrator, General Services, or his/her designee, during an inspection of records conducted by GSA as part of that agency's responsibility to recommend improvements in records management practices and programs, under authority of 44 U.S.C. 2904 and 2906. Such disclosure shall be made in accordance with the GSA regulations governing inspection of records for this purpose, and any other relevant (i.e., GSA or Commerce) directive. Such disclosure shall not be used to make determinations about individuals.

8. A record from this system of records may be disclosed, as a routine use, to the public after either publication of the application pursuant to 35 U.S.C. 122(b) or issuance of a patent pursuant to 35 U.S.C. 151. Further, a record may be disclosed, subject to the limitations of 37 CFR 1.14, as a routine use, to the public if the record was filed in an application which became abandoned or in which the proceedings were terminated and which application is referenced by either a published application, an application open to public inspections or an issued patent.

9. A record from this system of records may be disclosed, as a routine use, to a Federal, State, or local law enforcement agency, if the USPTO becomes aware of a violation or potential violation of law or regulation.

UNITED STATES PATENT AND TRADEMARK OFFICE

Commissioner for Patents
United States Patent and Trademark Office
P.O. Box 1450
Alexandria, VA 22313-1450
www.uspto.gov

In re Patent No. 6650877
Issue Date: November 18,2003
Application No. 09559031
Filed: April 27,2000
Attorney Docket No. 6452/53537

:

:DECISION GRANTING PETITION
:UNDER 37 CFR 1.378(c)

:

This is a decision on the electronic petition, filed December 23,2007 ,under 37 CFR 1.378(c) to accept the unintentionally delayed payment of the 3.5 year maintenance fee for the above-identified patent.

The petition is GRANTED.

The maintenance fee is accepted, and the above-identified patent reinstated as of December 23,2007. This decision also constitutes notice that the fee has been accepted. An electronic copy of the petition and this decision has been created as an entry in an Image File Wrapper. Nevertheless, petitioner should print and retain an independent copy

Telephone inquires related to this electronic decision should be directed to the Electronic Business Center at 1-866-217-9197.

The opinion in support of the petition decision being entered today was not written for publication and is not binding precedent of the Board.

UNITED STATES PATENT AND TRADEMARK OFFICE

BEFORE THE

BOARD OF PATENT APPEALS AND INTERFERENCES

In re Application of

MATTHEW LESTER

Appeal No. 2005-1737
Application No. 09/558,115

DECISION ON PETITION

MAILED

FEB 2 7 2006

U.S. PATENT AND TRADEMARK OFFICE
BOARD OF PATENT APPEALS
AND INTERFERENCES

This is a decision on the petition filed February 16, 2006 under 37 CFR § 1.10(c) to correct the discrepancy between the filing date initially accorded by the Office to the Request for Rehearing and the "date-in" entered by the United States Postal Service (USPS) or other official USPS notation.

The petition will be treated as a petition under 37 CFR § 1.181.

Pursuant to 37 CFR §§ 1.181(g) and 41.3, the Director has delegated authority to decide petitions under 37 CFR §§ 1.181 and 1.183 from actions of the Board of Patent Appeals and Interferences (Board) or of personnel at the Board to the Chief Administrative Patent Judge of the Board. MPEP § 1002.02(f)(4)(b).

FINDINGS

1. On November 17, 2005, a merits panel at the Board entered a Decision on Appeal affirming the examiner's final rejection of claims 7-14.

2. Appellant had a time period of two months to either file a Request for Rehearing under 37 CFR § 41.52, file a Notice of Appeal seeking judicial review under 35 U.S.C. § 141 or 35 U.S.C. § 145, or to file a Request for Continued Examination under 37 CFR § 1.114.

3. The time period to respond to the decision expired January 17, 2006.

4. Appellant filed a Request for Rehearing requesting reconsideration of the Board's decision.

5. The Request for Rehearing was accorded a filing date of January 19, 2006 (Request, page 1).

6. On February 16, 2006, Petitioner filed a petition under 37 CFR § 1.10(c) to accord the correct filing date of Request for Rehearing (Petition, page 1).

7. The petition was filed three days after Petitioner became aware on February 13, 2006 that the Office's copy of the "Express Mail" mailing label was misplaced (id. at page 2).

8. The petition states that the "Express Mail" mail label in fact was placed on Appellant's Request for Rehearing for mailing prior to the original mailing by "Express Mail" (Petition, page 1, paragraph (a)).

9. The petition includes a true copy of the "Express Mail" mailing label (EV 107743195US) showing the "date-in" of January 17, 2006 (Petition, page 1, paragraph (b)).

DISCUSSION

The procedures for filing a petition to correct a discrepancy between the filing date initially accorded by the Office and the "date-in" entered by the USPS or other official USPS notation are set forth in 37 CFR § 1.10(c), which states:

> (c) Any person filing correspondence under this section that was received by the Office and delivered by the 'Express Mail Post Office to Addressee' service of the USPS, who can show that there is a discrepancy between the filing date accorded by the Office to the correspondence and the date of deposit as shown by the 'date-in' on the 'Express Mail' mailing label or other official USPS notation, may petition the Director to accord the correspondence a filing date as of the 'date-in' on the 'Express Mail' mailing label or other official USPS notation, provided that:
>
> (1) The petition is filed promptly after the person becomes aware that the Office has accorded, or will accord, a filing date other than the USPS deposit date;
>
> (2) The number of the 'Express Mail' mailing label was placed on the paper(s) or fee(s) that constitute the correspondence prior to the original mailing by 'Express Mail;' and
>
> (3) The petition includes a true copy of the 'Express Mail' mailing label showing the 'date-in,' and of any other official notation by the USPS relied upon to show the date of deposit.

Petitioner promptly filed this petition after becoming aware that the Office accorded the Request for Rehearing a filing date other than the USPS deposit date (see Finding No. 7). Petitioner has also shown that the number of the "Express Mail" mailing label was placed on the Request for Rehearing prior to the original mailing (see Finding No. 8) and included a true copy of the "Express Mail" mailing label showing the "date-in" (see Finding No. 9).

Accordingly, the petition to correct the discrepancy between the filing date initially accorded by the Office to the Request for Rehearing and the "date-in" entered by the USPS or other official USPS notation is GRANTED.

The Request for Rehearing is accorded the filing date of January 17, 2006. The application will be forwarded to the merits panel for action as appropriate.

Michael R. Fleming
Chief Administrative Patent Judge
Board of Patent Appeals and Interferences

Charles E. Miller
Dickstein, Shapiro, Morin, & Oshinsky, LLP
1177 Avenue of the Americas
New York, NY 10036-2714

UNITED STATES PATENT AND TRADEMARK OFFICE

COMMISSIONER FOR PATENTS
UNITED STATES PATENT AND TRADEMARK OFFICE
P.O. BOX 1450
ALEXANDRIA, VA 22313-1450
www.uspto.gov

Paper No.16

MAIL

JAN 2 2 2004

DIRECTOR OFFICE
TECHNOLOGY CENTER 2100

DANN, DORFMAN, HERRELL & SKILLMAN
1601 Market Street
Suite 2400
Philadelphia, PA 19103-2307

In re Application of
Robert L. SCHMITTER
Application No. 09/559,224
Filed: April 26, 2000
For: OBJECT-ORIENTED SOFTWARE SYSTEM ALLOWING LIVE MODIFICATION OF AN APPLICATION

DECISION ON REQUEST FOR WITHDRAWAL AS ATTORNEY

This is a decision on the Request To Withdraw from Representation filed November 24, 2003.

A grantable request to withdraw as attorney of record should indicate thereon the present mailing addresses of the attorney(s) who is/are withdrawing from the record and of the applicant. The request for withdrawal must be signed by every attorney seeking to withdraw or contain a clear indication that one attorney is signing on behalf of another/others. A request to withdraw will not be approved unless at least 30 (thirty) days would remain between the date of approval and the later of the expiration date of a time to file a response or the expiration date of the maximum time period which can be extended under 37 C.F.R. § 1. 136(a). The effective date of withdrawal being the date of decision and not the date of request. See M.P.E.P. § 402.06. 37 C.F.R. § 1.36 further requires that the applicant or patent owner be notified of the withdrawal of the attorney or agent.

The request is **GRANTED**.

All future communication from the Office will be directed to the below-listed address until otherwise notified by applicant. This correspondence address is provided by the withdrawn attorney(s). Applicant is reminded of the obligation to promptly notify the U.S. Patent and Trademark Office (the Office) of any change in correspondence address to ensure receipt of all communications from the Office.

Vincent N. Trans
Special Programs Examiner
Technology Center 2100
Computer Architecture, Software and Information Security
(703) 305-9750

cc: OBJECT BUILDERS
20134 Valley Forge Circle
King of Prussia, PA 19406

UNITED STATES PATENT AND TRADEMARK OFFICE

COMMISSIONER FOR PATENTS
UNITED STATES PATENT AND TRADEMARK OFFICE
P.O. BOX 1450
ALEXANDRIA, VA 22313-1450
www.uspto.gov

MAIL

Paper No. 12

FEB 13 2004

DIRECTOR OFFICE
TECHNOLOGY CENTER 2600

STAAS & HALSEY LLP
SUITE 700
1201 NEW YORK AVENUE, N.W.
WASHINGTON DC 20005

In re Application of
Nakamura et al.
Application No. 09/559,261
Filed: April 27, 2000
For: POINTING DEVICE

DECISION ON PETITION
TO WITHDRAW HOLDING OF
ABANDONMENT

This is a decision on the Petition for Withdrawal of Abandonment pursuant to 37 C.F.R. § 1.181(a), filed December 3, 2003. No fee is required.

This application was held as abandoned for failure to file a timely response to the outstanding Office action, mailed December 18, 2002. A Notice of Abandonment was mailed November 3, 2003.

The showing required to establish the failure to receive an Office communication must include a statement from the practitioner stating that the Office communication was not received by the Practitioner and attesting to the fact that a search of the file jacket and docket records indicates that the Office communication was not received. A copy of the docket record where the non-received Office communication would have been entered had it been received and docketed must be attached to and referenced in practitioner's statement. See "Withdrawing the Holding of Abandonment When Office Actions Are Not Received", 1156 Official Gazette 53 (November 16, 1993) and M.P.E.P. § 711.03(c), section II. The showing outlined above may not be sufficient if there are circumstances that point to a conclusion that the Office communication may have been lost after receipt rather than a conclusion that the Office communication was lost in the mail.

Petitioner has satisfied the requirements set forth above. The petition is **GRANTED.**

The Notice of Abandonment is vacated and the holding of abandonment is withdrawn.

It is noted that the correspondence address was changed after applicants' response of September 30, 2002 (paper No. 8). Applicants are reminded of the necessity to properly notify the Office of any correspondence change.

The application file is being returned to the examiner for update of the Office action as appropriate. From there, the application will be forwarded to the TC2600 Technical Support Staff for mailing of the updated Office action. The period for response will be set to run from the date of the new mailing.

Joseph J. Rolla Jr., Director
Technology Center 2600
Communications
(703) 305-9700

UNITED STATES PATENT AND TRADEMARK OFFICE

Commissioner for Patents
United States Patent and Trademark Office
P.O. Box 1450
Alexandria, VA 22313-1450
www.uspto.gov

In re Patent No. 6293301
Issue Date: September 25,2001
Application No. 09559537
Filed: April 28,2000
Attorney Docket No. 35274-01700

:
:DECISION GRANTING PETITION
:UNDER 37 CFR 1.378(c)
:

This is a decision on the electronic petition, filed November 10,2009 ,under 37 CFR 1.378(c) to accept the unintentionally delayed payment of the 7.5 year maintenance fee for the above-identified patent.

The petition is **GRANTED**.

The maintenance fee is accepted, and the above-identified patent reinstated as of November 10,2009 . This decision also constitutes notice that the fee has been accepted. An electronic copy of the petition and this decision has been created as an entry in the Image File Wrapper. Nevertheless, petitioner should print and retain an independent copy.

Telephone inquiries related to this electronic decision should be directed to the Electronic Business Center at 1-866-217-9197.

PTO/SB/66 (03-09)
Approved for use through 03/31/2012. OMB 0651-0016
U.S. Patent and Trademark Office: U.S. DEPARTMENT OF COMMERCE
Under the Paperwork Reduction Act of 1995, no persons are required to respond to a collection of information unless it displays valid OMB control number.

PETITION TO ACCEPT UNINTENTIONALLY DELAYED PAYMENT OF MAINTENANCE FEE IN AN EXPIRED PATENT (37 CFR 1.378(c))

Patent Number	Issue Date (YYYY-MM-DD)	Application Number	Filing Date (YYYY-MM-DD)	Docket Number (if applicable)
6293301	2001-09-25	09559537	2000-04-28	35274-01700

CAUTION: Maintenance fee (and surcharge, if any) payment must correctly identify: (1) the patent number and (2) the application number of the actual U.S. application leading to issuance of that patent to ensure the fee(s) is/are associated with the correct patent. 37 CFR 1.366(c) and (d).

SMALL ENTITY
☒ Patentee claims, or has previously claimed, small entity status. See 37 CFR 1.27.

LOSS OF ENTITLEMENT TO SMALL ENTITY STATUS
☐ Patentee is no longer entitled to small entity status. See 37 CFR 1.27(g)

NOT Small Entity		Small Entity	
Fee	Code	Fee	Code
○ 3 ½ year	(1551)	○ 3 ½ year	(2551)
○ 7 ½ year	(1552)	◉ 7 ½ year	(2552)
○ 11 ½ year	(1553)	○ 11 ½ year	(2553)

SURCHARGE
The surcharge required by 37 CFR 1.20(i)(2) (Fee Code 1558) must be paid as a condition of accepting unintentionally delayed payment of the maintenance fee.

MAINTENANCE FEE (37 CFR 1.20(e)-(g))
The appropriate maintenance fee must be submitted with this petition.

STATEMENT
THE UNDERSIGNED CERTIFIES THAT THE DELAY IN PAYMENT OF THE MAINTENANCE FEE TO THIS PATENT WAS UNINTENTIONAL

PETITIONER(S) REQUEST THAT THE DELAYED PAYMENT OF THE MAINTENANCE FEE BE ACCEPTED AND THE PATENT REINSTATED

THIS PORTION MUST BE COMPLETED BY THE SIGNATORY OR SIGNATORIES

37 CFR 1.378(d) states: "Any petition under this section must be signed by an attorney or agent registered to practice before the Patent and Trademark Office, or by the patentee, the assignee, or other party in interest."

I certify, in accordance with 37 CFR 1.4(d)(4) that I am

○ An attorney or agent registered to practice before the Patent and Trademark Office

○ A sole patentee

◉ A joint patentee; I certify that I am authorized to sign this submission on behalf of all the other patentees.

○ A joint patentee; all of whom are signing this e-petition

○ The assignee of record of the entire interest

A Joint Patentee and I certify that I am authorized to sign this submission on behalf of all the other patentees			
A signature of the applicant or representative is required in accordance with 37 CFR 1.33 and 10.18. Please see 37 CFR 1.4(d) for the form of the signature.			
Signature	/Herman W. Griffin/	Date (YYYY-MM-DD)	2009-11-10
Name	Herman W. Griffin		

This collection of information is required by 37 CFR 1.378(c). The information is required to obtain or retain a benefit by the public which is to file (and by the USPTO to process) an application. Confidentiality is governed by 35 U.S.C. 122 and 37 CFR 1.11 and 1.14. This collection is estimated to take 1 hour to complete, including gathering, preparing, and submitting the completed application form to the USPTO. Time will vary depending upon the individual case. Any comments on the amount of time you require to complete this form and/or suggestions for reducing this burden, should be sent to the Chief Information Officer, U.S. Patent and Trademark Office, U.S. Department of Commerce, P.O. Box 1450, Alexandria, VA 22313-1450. DO NOT SEND FEES OR COMPLETED FORMS TO THIS ADDRESS. **This form can only be used when in conjunction with EFS-Web. If this form is mailed to the USPTO, it may cause delays in reinstating the patent.**

Privacy Act Statement

The Privacy Act of 1974 (P.L. 93-579) requires that you be given certain information in connection with your submission of the attached form related to a patent application or patent. Accordingly, pursuant to the requirements of the Act, please be advised that: (1) the general authority for the collection of this information is 35 U.S.C. 2(b)(2); (2) furnishing of the information solicited is voluntary; and (3) the principal purpose for which the information is used by the U.S. Patent and Trademark Office is to process and/or examine your submission related to a patent application or patent. If you do not furnish the requested information, the U.S. Patent and Trademark Office may not be able to process and/or examine your submission, which may result in termination of proceedings or abandonment of the application or expiration of the patent.

The information provided by you in this form will be subject to the following routine uses:

1. The information on this form will be treated confidentially to the extent allowed under the Freedom of Information Act (5 U.S.C. 552) and the Privacy Act (5 U.S.C. 552a). Records from this system of records may be disclosed to the Department of Justice to determine whether the Freedom of Information Act requires disclosure of these records.

2. A record from this system of records may be disclosed, as a routine use, in the course of presenting evidence to a court, magistrate, or administrative tribunal, including disclosures to opposing counsel in the course of settlement negotiations.

3. A record in this system of records may be disclosed, as a routine use, to a Member of Congress submitting a request involving an individual, to whom the record pertains, when the individual has requested assistance from the Member with respect to the subject matter of the record.

4. A record in this system of records may be disclosed, as a routine use, to a contractor of the Agency having need for the information in order to perform a contract. Recipients of information shall be required to comply with the requirements of the Privacy Act of 1974, as amended, pursuant to 5 U.S.C. 552a(m).

5. A record related to an International Application filed under the Patent Cooperation Treaty in this system of records may be disclosed, as a routine use, to the International Bureau of the World Intellectual Property Organization, pursuant to the Patent Cooperation Treaty.

6. A record in this system of records may be disclosed, as a routine use, to another federal agency for purposes of National Security review (35 U.S.C. 181) and for review pursuant to the Atomic Energy Act (42 U.S.C. 218(c)).

7. A record from this system of records may be disclosed, as a routine use, to the Administrator, General Services, or his/her designee, during an inspection of records conducted by GSA as part of that agency's responsibility to recommend improvements in records management practices and programs, under authority of 44 U.S.C. 2904 and 2906. Such disclosure shall be made in accordance with the GSA regulations governing inspection of records for this purpose, and any other relevant (i.e., GSA or Commerce) directive. Such disclosure shall not be used to make determinations about individuals.

8. A record from this system of records may be disclosed, as a routine use, to the public after either publication of the application pursuant to 35 U.S.C. 122(b) or issuance of a patent pursuant to 35 U.S.C. 151. Further, a record may be disclosed, subject to the limitations of 37 CFR 1.14, as a routine use, to the public if the record was filed in an application which became abandoned or in which the proceedings were terminated and which application is referenced by either a published application, an application open to public inspections or an issued patent.

9. A record from this system of records may be disclosed, as a routine use, to a Federal, State, or local law enforcement agency, if the USPTO becomes aware of a violation or potential violation of law or regulation.

UNITED STATES PATENT AND TRADEMARK OFFICE

Commissioner for Patents
United States Patent and Trademark Office
P.O. Box 1450
Alexandria, VA 22313-1450
www.uspto.gov

In re Patent No. 6597558
Issue Date: July 22,2003
Application No. 09559680
Filed: April 27,2000
Attorney Docket No. 3032.003US1

:
:DECISION GRANTING PETITION
:UNDER 37 CFR 1.378(c)
:

This is a decision on the electronic petition, filed July 20,2009 ,under 37 CFR 1.378(c) to accept the unintentionally delayed payment of the 3.5 year maintenance fee for the above-identified patent.

The petition is **GRANTED**.

The maintenance fee is accepted, and the above-identified patent reinstated as of July 20,2009 .
This decision also constitutes notice that the fee has been accepted. An electronic copy of the petition and this decision has been created as an entry in the Image File Wrapper. Nevertheless, petitioner should print and retain an independent copy.

Telephone inquiries related to this electronic decision should be directed to the Electronic Business Center at 1-866-217-9197.

UNITED STATES PATENT AND TRADEMARK OFFICE

COMMISSIONER FOR PATENTS
UNITED STATES PATENT AND TRADEMARK OFFICE
WASHINGTON, D.C. 20231
www.uspto.gov

MAILED

JAN 0 4 2002

DIRECTOR'S OFFICE
TECHNOLOGY CENTER 2100

Paper No. 7

Finnegan, Henderson, Farabow,
Garrett & Dunner L.L.P.
1300 I Street N.W.
Washington, D.C. 20005-3315

In re Application of: Michael Costonis et al.	)	
Application No. 09/559,725	)	
Filed: April 28, 2000	)	**DECISION ON REQUEST FOR**
For: CLAIMS DATA ANALYSIS	)	**WITHDRAWAL AS ATTORNEY**
TOOLKIT	)	

This is a decision on the Request To Withdraw from Representation filed December 28, 2001

A grantable request to withdraw as attorney of record should indicate thereon the present mailing addresses of the attorney(s) who is/are withdrawing from the record and of the applicant. The request for withdrawal must be signed by every attorney seeking to withdraw or contain a clear indication that one attorney is signing on behalf of another/others. A request to withdraw will not be approved unless at least 30 (thirty) days would remain between the date of approval and the later of the expiration date of a time to file a response or the expiration date of the maximum time period which can be extended under 37 C.F.R. § 1. 136(a). The effective date of withdrawal being the date of decision and not the date of request. See M.P.E.P. § 402.06. 37 C.F.R. § 1.36 further requires that the applicant or patent owner be notified of the withdrawal of the attorney or agent.

The request is **GRANTED**.

All future communications from the Office will be directed to the below-listed address until otherwise notified by applicant. This correspondence address is provided by the withdrawn attorney(s). Applicant is reminded of the obligation to promptly notify the Patent and Trademark Office (Office) of any change in correspondence address to ensure receipt of all communications from the Office.

Pinchus M. Laufer

Pinchus M. Laufer
Special Programs Examiner
Technology Center 2100
Computer Architecture, Software, and Electronic Commerce
(703) 306-4160

cc: Joel Benson
Brinks Hofer Gilson & Lione
455 N. CityFront Plaza Drive
Chicago, Illinois 60611-5599

UNITED STATES PATENT AND TRADEMARK OFFICE

UNITED STATES DEPARTMENT OF COMMERCE
United States Patent and Trademark Office
Address: COMMISSIONER FOR PATENTS
P.O. Box 1450
Alexandria, Virginia 22313-1450
www.uspto.gov

KENYON & KENYON LLP
RIVERPARK TOWERS, SUITE 600
333 W. SAN CARLOS ST.
SAN JOSE, CA 95110

Mail Date: 04/23/2010

Applicant	: Elliott D. Light	: DECISION ON REQUEST FOR
Patent Number	: 7617125	: RECALCULATION of PATENT
Issue Date	: 11/10/2009	: TERM ADJUSTMENT IN VIEW
Appliction No	: 09/559,778	: OF WYETH
Filed	: 04/27/2000	:
		:

The Patentee's Request for Recalculation is **DISMISSED.**

This Request is deemed ineligible for consideration for one or more of the following reasons:

(A). The patent for which PTA recalculation is requested is either a design or reissue application or is a reexamination proceeding;

(B). The patent for which PTA recalculation is requested resulted from a utility or plant application filed under 35 USC 111(a) before May 29, 2000 and no CPA filed in the application on/after May 29, 2000;

(C). The patent for which PTA recalculation is requested resulted from an international application in which the international filing date was before May 29, 2000 and no CPA filed in the application on/after May 29, 2000;

(D). The patent for which PTA recalculation is requested issued on/after March 2, 2010;

(E). The Request for Recalculation was filed more than 180 days after the grant date of the patent and the request was not filed within two months of a dismissal of a request for reconsideration of the of the patent term under 37 CFR 1.705(d);

(F). The Request for Recalculation is not solely limited to USPTO pre-Wyeth interpretation of 35 U.S.C. 154(b)(2)(A);

or

(G). A civil action was filed pursuant to 35 U.S.C. 154(b)(4)(A)concerning the same patent at issue in this request.

Patentee may file a reply to this decision dismissing the Request for Recalculation. Patentee must file such reply within one month or thirty days, whichever is longer, of the mail date of the decision dismissing the Request for Recalculation. No fee is required if patentee is asserting in the reply that the dismissal for ineligibility is improper.

Patentee should use document code PET.OP if electronically filing a reply to this dismissal. If the USPTO finds that the request was improperly deemed ineligible, the USPTO will mail applicant a recalculation determination.

Patentee should be aware that in order to preserve the right to review in the United States District Court for the District of Columbia of the USPTO patent term adjustment determination, patentee must ensure that he or she also take the steps required under 35 U.S.C. 154(b)(4)(A). Nothing in the request for recalculation should be construed as providing an alternative time frame for commencing a civil action under 35 U.S.C. 154 (b)(4)(A).

Any questions concerning this decision should be directed to the Office of Patent Legal Administration at 571-272-7702.

UNITED STATES PATENT AND TRADEMARK OFFICE

Commissioner for Patents
United States Patent and Trademark Office
P.O. Box 1450
Alexandria, VA 22313-1450
www.uspto.gov

HUNTON & WILLIAMS LLP
INTELLECTUAL PROPERTY DEPARTMENT
1900 K STREET, N.W., SUITE 1200
WASHINGTON DC 20006-1109

COPY MAILED
MAR 12 2010

In re Patent No. 7,018,645	:	
Issue Date: March 28, 2006	:	
Application No. 09/559,799	:	NOTICE
Filed: April 27, 2000	:	
Attorney Docket No. T8275	:	

This is a notice regarding your request for acceptance of a fee deficiency submission under 37 CFR 1.28. On September 1, 1998, the Court of Appeals for the Federal Circuit held that 37 CFR 1.28(c) is the sole provision governing the time for correction of the erroneous payment of the issue fee as a small entity. **See DH Technology v. Synergystex International, Inc. 154 F.3d 1333, 47 USPQ2d 1865 (Fed. Cir. Sept. 1, 1998).**

The Office no longer investigates or rejects original or reissue applications under 37 CFR 1.56. **1098 Off. Gaz. Pat. Office 502 (January 3, 1989).** Therefore, nothing in this Notice is intended to imply that an investigation was done.

Your fee deficiency submission under 37 CFR 1.28 is hereby **NOT ACCEPTED**.

The fee deficiency cannot be accepted because no itemization has been submitted, as required by 37 CFR 1.28(C) (ii) which states:

(2) Payment of deficiency owed. The deficiency owed, resulting from the previous erroneous payment of small entity fees, must be paid.

(ii) *Itemization of the deficiency payment.* An itemization of the total deficiency payment is required. The itemization must include the following information:

(A) Each particular type of fee that was erroneously paid as a small entity, (e.g., basic statutory filing fee, two-month extension of time fee) along with the current fee amount for non-small entity;

(B) The small entity fee actually paid, and when. This will permit the Office to differentiate, for example, between two one-month extension of time fees erroneously paid as a small entity but on different dates;

(C) The deficiency owed amount (for each fee erroneously paid); and

(D) The total deficiency payment owed, which is the sum or total of the individual deficiency owed amounts set forth in paragraph (c)(2)(ii)(C) of this section.

As indicated above, the seven and half year maintenance fee must be properly itemized.

This itemization must be provided within one (1) month of the mail date of this decision to avoid the return of the deficiency payment. See 37 CFR 1.28 (c)(3). No extension of this 1-month time limit will be granted under 37 CFR 1.136(a).

The additional fee submitted December 22, 2009, is acknowledged, however, the maintenance fee must be properly itemized as indicated above.

Inquiries related to this communication should be directed to Diane Goodwyn at (571) 272-6735.

Thurman K. Page
Petitions Examiner
Office of Petitions

UNITED STATES PATENT AND TRADEMARK OFFICE

Commissioner for Patents
United States Patent and Trademark Office
P.O. Box 1450
Alexandria, VA 22313-1450
www.uspto.gov

MAILED

JUN 07 2010

OFFICE OF PETITIONS

HUNTON & WILLIAMS LLP
INTELLECTUAL PROPERTY DEPT.
1900 K STREET, N.W.
SUITE 1200
WASHINGTON DC 20006-1109

In re Patent No. 7,018,645	:	
Issue Date: March 28, 2006	:	
Application No. 09/559,799	:	NOTICE
Filed: April 27, 2000	:	
Attorney Docket No. T8275	:	

This is a notice regarding your request for acceptance of a fee deficiency submission under 37 CFR 1.28. On September 1, 1998, the Court of Appeals for the Federal Circuit held that 37 CFR 1.28(c) is the sole provision governing the time for correction of the erroneous payment of the issue fee as a small entity. **See DH Technology v. Synergystex International, Inc. 154 F.3d 1333, 47 USPQ2d 1865 (Fed. Cir. Sept. 1, 1998).**

The Office no longer investigates or rejects original or reissue applications under 37 CFR 1.56. **1098 Off. Gaz. Pat. Office 502 (January 3, 1989)**. Therefore, nothing in this Notice is intended to imply that an investigation was done.

Your fee deficiency submission under 37 CFR 1.28 is hereby **ACCEPTED**.

This application is no longer entitled to small entity status. Accordingly, all future fees paid in this application must be paid at the large entity rate.

Inquiries related to this communication should be directed to Diane Goodwyn at (571) 272-6735.

Thurman K. Page
Petitions Examiner
Office of Petitions

UNITED STATES PATENT AND TRADEMARK OFFICE

Commissioner for Patents
United States Patent and Trademark Office
P.O. Box 1450
Alexandria, VA 22313-1450
www.uspto.gov

DENIRO/RAMBUS
575 MARKET STREET
SUITE 2500
SAN FRANCISCO CA 94105

COPY MAILED

APR 2 7 2007

OFFICE OF PETITIONS

In re Application of	:	
Barth et al.	:	
Application No. 09/559,835	:	DECISION ON PETITION
Filed: 04-26-2000	:	
Attorney Docket No. RA019C3DR	:	

This is a decision on the petition filed February 6, 2007, to withdraw the holding of abandonment for the above-identified application.

On March 7, 2006, the Office mailed a Notice of Allowance and Fee(s) Due, which set a three-month statutory period for reply. In the absence of a timely filed response, the application was held abandoned on June 8, 2006. A Notice of Abandonment was mailed on January 5, 2007.

In the present petition, the practitioner requested that the Office withdraw the holding of abandonment due to non-receipt, remail the Notice of Allowance, and restart the period for reply.

PETITION TO WITHDRAW THE HOLDING OF ABANDONMENT

A review of the record indicates no irregularity in the mailing of the Notice of Allowance, and in the absence of any irregularity in the mailing, there is a strong presumption that the Notice of Allowance was properly mailed to the address of record. This presumption may be overcome by a showing that the Notice of Allowance was not in fact received. The showing required to establish non-receipt of an Office communication must include a statement from the practitioner, stating that the practitioner did not receive the Office communication and attesting to the fact that a search of the file jacket and docket records indicates that the Office communication was not received. A copy of the docket record where the non-received Office communication would have been entered had it been received and docketed must be attached to and referenced in practitioner's statement. See MPEP 711.03(c)(I)(A). For example, if a three-month period for reply was set in the non-received Office communication, a copy of the docket report showing all replies docketed for a date three months from the mail date of the

non-received Office communication must be submitted as documentary proof of non-receipt of the Office communication. The showing outlined above may not be sufficient if there are circumstances that point to a conclusion that the Office communication may have been lost after receipt rather than a conclusion that the Office communication was lost in the mail (e.g. if the practitioner has a history of not receiving Office communications).

After reviewing the documents submitted on petition, the Office concludes that the showing of record is sufficient to warrant withdrawal of the holding of abandonment. The practitioner for applicants submitted copies of docket records where the Notice of Allowance would have been entered had it been received and docketed. The practitioner attested to the fact that a search of the file jacket and docket records indicated that the Notice of Allowance was not received. Accordingly, applicants presented the required showing under 37 CFR 1.181.

The petition under 37 CFR 1.181 is GRANTED. No petition fee is required.

Technology Center Art Unit 2187 has been advised of this decision. The matter is being referred to the Technology Center's technical support staff for mailing of a new Notice of Allowance. The three (3) month statutory time period for responding to the Notice of Allowance will be set to run from the mailing date of the new Notice of Allowance.

Telephone inquiries related to this decision may be directed to the undersigned at (571) 272-3211.

Christina Tartera Donnell

Christina Tartera Donnell
Senior Petitions Attorney
Office of Petitions

UNITED STATES DEPARTMENT OF COMMERCE
Patent and Trademark Office
ASSISTANT SECRETARY OF COMMERCE AND
COMMISSIONER OF PATENTS AND TRADEMARKS
Washington, DC 2023

December 30, 2002

Michael J. Ward
Abbott Laboratories
100 Abbott Park RD
Abbott Park, IL 60064

In re application of:
Schrimpf et al DECISION ON PETITION
Serial No.: 09/559,881
Filed: April 26, 2000
For: HETEROCYCLIC SUBSTITUTED AMINOAZACYCLES
USEFUL AS CENTRAL NERVOUS SYSTEM AGENTS

This is a decision on the petition received by fax on October 23, 2002, to withdraw the holding of abandonment in the above-identified application.

The above-identified application became abandoned for failure to reply within the meaning of 37 C.F.R. 1.113 in timely manner to the Notice to File Missing Parts of Application mailed July 20, 2000. Which set a shortened statutory period for reply of two (2) months. Accordingly, this application became abandoned September 21, 2000. A notice of abandonment was mailed on August 30, 2002.

On October 23, 2002, the office received a communication from the attorney of record. Enclosed was an acknowledgment that the attorney responded to the Notice to File Missing Parts on September 25, 2000.

The evidence submitted is sufficient to establish that the petitioners did response by fax transmittal.

The petition is hereby GRANTED.

The office regrets any inconvenience this may have caused the attorney.

The application has been completed for release to Technology Center 1613.

Telephone inquiries concerning this matter may be directed to Doshie E. Day at (703) 308-3640.

Doshie Day

Doshie E. Day
Program Management Assistant
Office Initial Patent Examination

UNITED STATES PATENT AND TRADEMARK OFFICE

UNITED STATES DEPARTMENT OF COMMERCE
United States Patent and Trademark Office
Address: COMMISSIONER FOR PATENTS
P.O. Box 1450
Alexandria, Virginia 22313-1450
www.uspto.gov

SCHWEGMAN, LUNDBERG & WOESSNER, P.A.
P.O. BOX 2938
MINNEAPOLIS, MN 55402

Mail Date: 04/22/2010

Applicant	: Zhiping Yin	: DECISION ON REQUEST FOR
Patent Number	: 7576400	: RECALCULATION of PATENT
Issue Date	: 08/18/2009	: TERM ADJUSTMENT IN VIEW
Appliction No	: 09/559,903	: OF WYETH
Filed	: 04/26/2000	:
		:

The Patentee's Request for Recalculation is **DISMISSED.**

This Request is deemed ineligible for consideration for one or more of the following reasons:

(A). The patent for which PTA recalculation is requested is either a design or reissue application or is a reexamination proceeding;

(B). The patent for which PTA recalculation is requested resulted from a utility or plant application filed under 35 USC 111(a) before May 29, 2000 and no CPA filed in the application on/after May 29, 2000;

(C). The patent for which PTA recalculation is requested resulted from an international application in which the international filing date was before May 29, 2000 and no CPA filed in the application on/after May 29, 2000;

(D). The patent for which PTA recalculation is requested issued on/after March 2, 2010;

(E). The Request for Recalculation was filed more than 180 days after the grant date of the patent and the request was not filed within two months of a dismissal of a request for reconsideration of the of the patent term under 37 CFR 1.705(d);

(F). The Request for Recalculation is not solely limited to USPTO pre-Wyeth interpretation of 35 U.S.C. 154(b)(2)(A);

or

(G). A civil action was filed pursuant to 35 U.S.C. 154(b)(4)(A)concerning the same patent at issue in this request.

Patentee may file a reply to this decision dismissing the Request for Recalculation. Patentee must file such reply within one month or thirty days, whichever is longer, of the mail date of the decision dismissing the Request for Recalculation. No fee is required if patentee is asserting in the reply that the dismissal for ineligibility is improper.

Patentee should use document code PET.OP if electronically filing a reply to this dismissal. If the USPTO finds that the request was improperly deemed ineligible, the USPTO will mail applicant a recalculation determination.

Patentee should be aware that in order to preserve the right to review in the United States District Court for the District of Columbia of the USPTO patent term adjustment determination, patentee must ensure that he or she also take the steps required under 35 U.S.C. 154(b)(4)(A). Nothing in the request for recalculation should be construed as providing an alternative time frame for commencing a civil action under 35 U.S.C. 154 (b)(4)(A).

Any questions concerning this decision should be directed to the Office of Patent Legal Administration at 571-272-7702.

UNITED STATES PATENT AND TRADEMARK OFFICE

Commissioner for Patents
United States Patent and Trademark Office
Washington, D.C. 20231
www.uspto.gov

Paper No. 17

Fulwider Patton Lee & Utecht
Howard Hughes Center
6060 Center Drive, Tenth Floor
Los Angeles, CA 90045

COPY MAILED

MAR 2 6 2003

OFFICE OF PETITIONS

In re Application of
Timothy A.M. Chuter
Application No. 09/560,012
Filed: April 27, 2000
Attorney Docket No. ENDOV-51200

ON PETITION

This is a decision on the renewed petition under 37 CFR 1.137(b), filed March 17, 2003, to revive the above-identified application.

The petition is **GRANTED**.

The application file is being forwarded to Technology Center AU 3738 for processing the Request for Continued Examination filed with the instant petition.

Telephone inquiries concerning this decision should be directed to Latrice Bond at (703) 308-6911.

Latrice Bond

Latrice Bond
Paralegal Specialist
Office of Petitions
Office of the Deputy Commissioner
For Patent Examination Policy

UNITED STATES PATENT AND TRADEMARK OFFICE

Commissioner for Patents
United States Patent and Trademark Office
Washington, D.C. 20231
www.uspto.gov

Paper No. 13

Fulwider Patton Lee & Utecht
Howard Hughes Center
6060 Center Drive, Tenth Floor
Los Angeles, CA 90045

COPY MAILED

JAN 23 2003

OFFICE OF PETITIONS

In re Application of
Chuter, Timothy A.M.
Application No. 09/560,012
Filed: April 27, 2000
Attorney Docket No. ENDOV-51200

ON PETITION

This is a decision on the petition under 37 CFR 1.137(b), filed December 26, 2002, to revive the above-identified application.

The petition is **DISMISSED**.

Any request for reconsideration of this decision must be submitted within TWO (2) MONTHS from the mail date of this decision. Extensions of time under 37 CFR 1.136(a) are permitted. The reconsideration request should include a cover letter entitled "Renewed Petition under 37 CFR 1.137(b)." This is **not** final agency action within the meaning of 5 U.S.C. § 704.

A grantable petition under 37 CFR 1.137(b) must be accompanied by: (1) the required reply, unless previously filed; (2) the petition fee as set forth in 37 CFR 1.17(m); (3) a statement that the entire delay in filing the required reply from the due date for the reply until the filing of a grantable petition pursuant to 37 CFR 1.137(b) was unintentional; and (4) any terminal disclaimer (and fee as set forth in 37 CFR 1.20(d)) required by 37 CFR 1.137(c). Where there is a question as to whether either the abandonment or the delay in filing a petition under 37 CFR 1.137 was unintentional, the Commissioner may require additional information. See MPEP 711.03(c)(III)(C) and (D). The instant petition lack(s) item(s) (1).

The application became abandoned for failure to timely file a reply within the meaning of 37 CFR 1.113 to the final Office action of May 24, 2002. The proposed reply required for consideration of a petition to revive must be a Notice of Appeal (and appeal fee required by 37 CFR 1.17(b)), an amendment that *prima facie* places the application in condition for allowance, or the filing of a continuing application. See MPEP 711.03(c)(III)(A)(2). Since the amendment submitted does

not *prima facie* place the application in condition for allowance, the reply required must be a Notice of Appeal (and appeal fee), the filing of a continuing application or a request for continued examination. Alternatively, the reply requirement may be met by the filing of a submission under 37 CFR 1.129(a) if the above-identified application is eligible for such transitional practice.

In order to expedite a decision on the petition, petitioner may wish to consider submitting the response by facsimile transmission to telephone number indicated below and to the attention of the undersigned.

Further correspondence with respect to this matter should be addressed as follows:

By mail: Office of Petitions
Assistant Commissioner for Patents
Box DAC
Washington, D.C. 20231

By facsimile: (703) 308-6916
Attn: Office of Petitions

By hand: Office of Petitions
2201 South Clark Place
Crystal Plaza 4, Suite 3C23
Arlington, VA 22202

Telephone inquiries concerning this decision should be directed to Latrice Bond at (703) 308-6911.

Latrice Bond

Latrice Bond
Paralegal Specialist
Office of Petitions
Office of the Deputy Commissioner
for Patent Examination Policy

Attachment

"Courtesy Copy of Advisory Action"

UNITED STATES PATENT AND TRADEMARK OFFICE

COMMISSIONER FOR PATENTS
UNITED STATES PATENT AND TRADEMARK OFFICE
WASHINGTON, D.C. 20231
www.uspto.gov

Paper No. 15

Skjerven Morrill LLP
Three Embarcadero Center
28th Floor
San Francisco, CA 94111

COPY MAILED

JUN 2 6 2002

OFFICE OF PETITIONS

In re Application of :
T. Allan Hamilton, et al. :
Application No. 09/560,224 : ON PETITION
Filed: April 28, 2000 :
Attorney Docket No. M-12664-2C US :

This is a decision on the petition under 37 CFR 1.137(b), filed April 8, 2002, to revive the above-identified application.

The petition is **GRANTED**.

The above-identified application became abandoned for failure to reply in a timely manner to the non-final Office action mailed February 14, 2001, which set a shortened statutory period for reply of three (3) months. No extensions of time under the provisions of 37 CFR 1.136(a) were obtained. An office communication was mailed May 1, 2001 indicating that a reply filed on March 16, 2001 was not fully responsive to the prior Office Action because the office had no record of receipt of the alleged Preliminary Amendment. Since the above mentioned reply appeared to be *bona fide,* petitioner was given a time period of one (1) month or thirty (30) days from the mailing date of the notice, whichever is longer, within to supply the omission or correction in order to avoid abandonment. Accordingly, the application became abandoned on June 2, 2001.

The Power of Attorney has been accepted and recorded.

Telephone inquiries concerning this decision should be directed to Retta Williams at (703) 306-5594 or in my absence, Latrice Bond at (703) 308-6911.

The application file is being forwarded to Technology Center 2600, Art Unit 2633 for further processing.

Retta Williams

Retta Williams
Petitions Examiner
Office of Petitions
Office of the Deputy Commissioner
for Patent Examination Policy

Latrice Bond

Latrice Bond
Petitions Examiner
Office of Petitions
Office of the Deputy Commissioner
for Patent Examination Policy

BEST AVAILABLE COPY

SPE RESPONSE FOR CERTIFICATE OF CORRECTION

Paper No.: _____

DATE : 1/10/2007

TO SPE OF : ART UNIT 1600(1649)

SUBJECT : Request for Certificate of Correction on Patent No.: 7,101,545

A response is requested with respect to the accompanying request for a certificate of correction.

Please complete this form and return with file *(PFW), within 7 days to:
Certificates of Correction Branch – 2900 South Tower ste.9A43A
Palm location 7580 or forward *(IFW) to scanning using document code **COCX**.

*ok to cancel claims 13 and 14 as req. in COCIN in Madras?

Ernest C. White, LIE (703) 308-9390x122

Thank You For Your Assistance

Certificates of Correction Branch

The request for issuing the above-identified correction(s) is hereby:

Note your decision on the appropriate box.

- ☑ **Approved** — All changes apply.
- ☐ **Approved in Part** — Specify below which changes **do not** apply.
- ☐ **Denied** — State the reasons for denial below.

Comments:

_____

_____

_____

_____

_____

SPE

1649

Art Unit

PTOL-306 (REV. 7/03)

U.S. DEPARTMENT OF COMMERCE Patent and Trademark Office

UNITED STATES PATENT AND TRADEMARK OFFICE

Commissioner for Patents
United States Patent and Trademark Office
P.O. Box 1450
Alexandria, VA 22313-1450
www.uspto.gov

MAIL

JUL 0 5 2005

DIRECTOR OFFICE
TECHNOLOGY CENTER 2600

PATTON BOGGS
1660 LINCOLN ST
SUITE 2050
DENVER, CO 80264

In re Application of:
Georgene M NIELSON
Application No. 09/560,294
Filed: April 24, 2000
For: SYSTEM FOR LOAD BALANCING BASED ON CLASS OF SERVICE FOR WIRELESS COMMUNICATION NETWORKS

DECISION ON PETITION

This is a response to the petition to withdraw holding of abandonment, filed December 23, 2004.

*The petition is **granted**.*

This application became abandoned for failure to timely file a response to the Office action mailed August 14, 2002 which set a shortened statutory period of three (3) months to reply. A Notice of Abandonment was mailed on December 14, 2004.

Petitioner alleges to have timely filed a response to the Office action on October 22, 2002. To support this position, Petitioner has included with the instant petition a copy of the response bearing a proper certificate of facsimile transmission with a transmission date of October 22, 2002. Also included with the petition is a copy of an Auto-Reply Facsimile Transmission indicating that an 11 page document from Petitioner was received in the U.S. Patent and Trademark Office on October 22, 2002.

37 C.F.R. § 1.8(b) states that in the event that correspondence is considered timely filed by being mailed or transmitted in accordance with paragraph (a) of this section, but not received in the Patent and Trademark Office, and the application is held to be abandoned or the proceeding dismissed, terminated, or decided with prejudice, the correspondence will be considered timely if the party who forwarded such correspondence:

(1) Informs the Office of the previous mailing or transmission of the correspondence promptly after becoming aware that the Office has no evidence of receipt of the correspondence,

(2) Supplies an additional copy of the previously mailed or transmitted correspondence and certificate, and

(3) Includes a statement which attests on a personal knowledge basis or to the satisfaction of the Commissioner to the previous timely mailing or transmission. If the correspondence was sent by facsimile transmission, a copy of the sending unit's report confirming transmission may be used to support this statement.

Petitioner has met the requirements above. Accordingly, the Notice of Abandonment is vacated and the holding of abandonment withdrawn.

The application will be forwarded to the Technology Center's technical support staff for entry of the response. From there, the file will be forwarded to the examiner for consideration in due course.

Doris To
Special Program Examiner
Technology Center 2600
Communications

UNITED STATES PATENT AND TRADEMARK OFFICE

COMMISSIONER FOR PATENTS
UNITED STATES PATENT AND TRADEMARK OFFICE
WASHINGTON, D.C. 20231
www.uspto.gov

Paper No. 20

MacMillan, Sobanski & Todd, LLC
One Maritime Plaza Fourth Floor
720 Water Street
Toledo, OH 43604-1619

COPY MAILED

JAN 2 2 2003

OFFICE OF PETITIONS

In re Application of :
Shahram Tousi, et. al. :
Application No. 09/560,341 : ON PETITION
Filed: April 28, 2000 :
Attorney Docket No. 8409-000030 :

This is a decision on the petition under 37 CFR 1.137(b), filed December 9, 2002, to revive the above-identified application.

The petition is **GRANTED**.

It is not apparent whether the person signing the statement of unintentional delay was in a position to have firsthand or direct knowledge of the facts and circumstances of the delay at issue. Nevertheless, such statement is being treated as having been made as the result of a reasonable inquiry into the facts and circumstances of such delay. See 37 CFR 10.18(b) and Changes to Patent Practice and Procedure; Final Rule Notice, 62 Fed. Reg. 53131, 53178 (October 10, 1997), 1203 Off. Gaz. Pat. Office 63, 103 (October 21, 1997). In the event that such an inquiry has not been made, petitioner must make such an inquiry. If such inquiry results in the discovery that the entire delay in filing the required reply from the due date for the reply until the filing of a grantable petition pursuant to 37 CFR 1.137(b) was intentional, petitioner must notify the Office.

An extension of time under 37 CFR 1.136 must be filed prior to the expiration of the maximum extendable period for reply. See In re Application of S., 8 USPQ2d 1630, 1631 (Comm'r Pats. 1988). Accordingly, since the $1960.00 extension of time submitted with the petition on December 9, 2002 was subsequent to the maximum extendable period for reply, this fee is unnecessary and will be credited to petitioner's deposit account.

The application is being forwarded to Technology Center 3600 for further processing.

Telephone inquiries concerning this decision should be directed to Andrea Smith at (703) 308-6711.

Andrea Smith
Petitions Examiner
Office of Petitions
Office of the Deputy Commissioner
for Patent Examination Policy

UNITED STATES PATENT AND TRADEMARK OFFICE

COMMISSIONER FOR PATENTS
UNITED STATES PATENT AND TRADEMARK OFFICE
P.O. BOX 1450
ALEXANDRIA, VA 22313-1450
www.uspto.gov

HEWLETT PACKARD COMPANY
P O BOX 272400, 3404 E. HARMONY ROAD
INTELLECTUAL PROPERTY ADMINISTRATION
FORT COLLINS, CO 80527-2400

COPY MAILED

NOV 15 2005

OFFICE OF PETITIONS

In re Application of :
Karen Lo, et al. :
Application No. 09/560,364 : ON PETITION
Filed: April 28, 2000 :
Attorney Docket No. 10002496-1 :

This is a decision on the petition under 37 CFR 1.313(c)(2), filed November 9, 2005 to withdraw the above-identified application from issue after payment of the issue fee.

It does not appear that the petition is signed by an attorney of record. However, in accordance with 37 CFR 1.34(a), the signature of Michael G. Verga appearing on the correspondence shall constitute a representation to the United States Patent and Trademark Office that he is authorized to represent the particular party on whose behalf he acts. However, if Mr. Verga desires to receive correspondence regarding this file, the appropriate power of attorney documentation must be submitted. A courtesy copy of this decision is being mailed to Mr. Verga, the petitioner herein. However, until otherwise instructed, all future correspondence regarding this application file will be directed solely to the above-noted correspondence address of record.

The petition is **GRANTED**.

The above-identified application is withdrawn from issue for consideration of a submission under 37 CFR 1.114 (request for continued examination). See 37 CFR 1.313(c)(2).

Petitioner is advised that the issue fee paid on July 28, 2005 in the above-identified application cannot be refunded. If, however, the above-identified application is again allowed, petitioner may request that it be applied towards the issue fee required by the new Notice of Allowance. [1]

Telephone inquiries relating to this decision should be directed to the undersigned at (571) 272-3204.

---

[1] The request to apply the issue fee to the new Notice may be satisfied by completing and returning the new Issue Fee Transmittal Form PTOL-85(b), which includes the following language thereon: "Commissioner for Patents is requested to apply the Issue Fee and Publication Fee (if any) or re-apply any previously paid issue fee to the application identified above." Petitioner is advised that, whether a fee is indicated as being due or not, the Issue Fee Transmittal Form **must** be completed and timely submitted to avoid abandonment. Note the language in bold text on the first page of the Notice of Allowance and Fee(s) Due (PTOL-85).

The application is being referred to Technology Center AU 2638 for further processing of the request for continued examination under 37 CFR 1.114.

Sherry D. Brinkley
Petitions Examiner
Office of Petitions
Office of the Deputy Commissioner
for Patent Examination Policy

cc: MICHAEL VERGA
JAGTIANI + GUTTAG
10363-A DEMOCRACY LANE
FAIRFAX, VA 22030

UNITED STATES PATENT AND TRADEMARK OFFICE

Commissioner for Patents
United States Patent and Trademark Office
P.O. Box 1450
Alexandria, VA 22313-1450
www.uspto.gov

Date : November 15, 2005

TO : Director, Office of Patent Publication

FROM : Office of the Deputy Commissioner for Patent Examination Policy

SUBJECT : Withdrawal from Issue of

Applicant(s) : Karen Lo, et al.
Application No. : 09/560,364
Filed : April 28, 2000

The above-identified application has been assigned Patent No. 6,968,015 and an issue date of November 22, 2005.

It is hereby directed that this application be withdrawn from issue at the request of the applicant.

Do not refund the issue fee.

The following erratum should be published in the Official Gazette if the above-identified application is published in the OG of November 22, 2005:

> "All reference to Patent No. 6,968,015 to KAREN LO, ET AL. of CALIFORNIA for HALTING DATA STROBES ON A SOURCE SYNCHRONOUS LINK AND UTILIZATION OF SAME TO DEBUG DATA CAPTURE PROBLEMS appearing in the Official Gazette of November 22, 2005, should be deleted since no patent was granted."

Sherry D. Brinkley
Petitions Examiner
Office of Petitions
Office of the Deputy Commissioner
for Patent Examination Policy

cc: Paul Harrison, Crystal Park 3-44l (FAX-306-2737)
Deneise Boyd, Crystal Park 2, Suite 1100 (FAX-308-5413)
Mary Louise McAskill, Crystal Park 3-910 (FAX 305-4372)
Niomi Farmer, Crystal Park 3-9l0 (FAX-305-4372)
Mary E. Johnson (Cookie), P/OCS, CM1-6D07
Duane K.Davis, P/OCS, CM1-6A07
Tamara K. Greene, PK3-910

UNITED STATES PATENT AND TRADEMARK OFFICE

Commissioner for Patents
United States Patent and Trademark Office
P.O. Box 1450
Alexandria, VA 22313-1450
www.uspto.gov

Rockwell Collins Inc
Attn Kyle Eppele
400 Collins Road NE
Cedar Rapids IA 52498

COPY MAILED
SEP 22 2006
OFFICE OF PETITIONS

In re Application of	:	
Clark et al.	:	DECISION ON
Application No.: 09/560,381	:	
Filing Date: April 28, 2000	:	PETITION UNDER
Docket No.: 99CR074/KE	:	
For: Synchronization Technique For Spread	:	37 CFR 1.137(b)
Spectrum Frequency Hopped Data	:	
Links And Radios Using The Same	:	

This is a decision on Petition Under 37 CFR 1.137(b), filed on April 19, 2005.

The petition is **GRANTED**.

The above-identified application became abandoned for failure to file a timely and proper reply to the requirement in the Notice of Allowability, mailed on June 1, 2004, for "Corrected Drawings including changes required by the Notice of Draftsperson's Patent Drawing Review (PTO-948) attached to Paper No. 3." The Notice of Allowability set a non-extendable three month time period for response. The application went abandoned at midnight on September 1, 2004 for failure to respond. A Notice of Abandonment was mailed on October 20, 2004.

Petitioner has met the requirements for revival under §1.137(b). Petitioner submitted the required reply in the form of corrected drawings. The $1500.00 petition fee is itemized on the petition, and is being charged to counsel's Deposit Account No. 18-1722 per the general fee authorization appearing in the correspondence filed on April 30, 2004. Petitioner has also made the statement that "the entire delay in filing the required reply from the due date for the required reply until the filing of a grantable petition under 37 CFR 1.137(b) was unintentional." Since this utility application was filed after June 8, 1995, no terminal disclaimer is required. Accordingly, the petition is granted under §1.137(b).

This application is being referred to the Publishing Division.

George Dombroske
PCT Legal Examiner
Office of PCT Legal Administration
on behalf of
Office of Petitions
Telephone: 571-272-3283
Facsimile: 571-273-0459

UNITED STATES PATENT AND TRADEMARK OFFICE

Commissioner for Patents
United States Patent and Trademark Office
Washington, D.C. 20231
www.uspto.gov

Paper No. 16

Townsend and Townsend and Crew
Two Embarcadero Center, 8th Floor
San Francisco, CA 94111-3834

COPY MAILED

SEP 1 2 2003

OFFICE OF PETITIONS

In re Application of
J. H. Anh et al.
Application No. 09/560,424
Filed: April 27, 2000
Attorney Docket No. 018563-003500-AT-00073

ON PETITION

This is a decision on the petition under 37 CFR 1.137(b), filed June 3, 2003, to revive the above-identified application.

The petition is **DISMISSED**.

This application became abandoned for failure to reply within the meaning of 37 CFR 1.113 in a timely manner in reply to the final Office action mailed February 26, 2002, which set a shortened statutory period for reply of three (3) months. No extensions of time pursuant to the provisions of 37 CFR 1.136 have been obtained. Accordingly, the application became abandoned on May 27, 2002.

Any request for reconsideration of this decision must be submitted within TWO (2) MONTHS from the mail date of this decision. Extensions of time under 37 CFR 1.136(a) are permitted. The reconsideration request should include a cover letter entitled "Renewed Petition under 37 CFR 1.137(b)." This is **not** final agency action within the meaning of 5 U.S.C. § 704.

A grantable petition under 37 CFR 1.137(b) must be accompanied by: (1) the required reply, unless previously filed; (2) the petition fee as set forth in 37 CFR 1.17(m); (3) a statement that the entire delay in filing the required reply from the due date for the reply until the filing of a grantable petition pursuant to 37 CFR 1.137(b) was unintentional; and (4) any terminal disclaimer (and fee as set forth in 37 CFR 1.20(d)) required by 37 CFR 1.137(c). Where there is a question as to whether either the abandonment or the delay in filing a petition under 37 CFR 1.137 was unintentional, the Commissioner may require additional information. See MPEP 711.03(c)(III)(C) and (D). The instant petition lack(s) item(s) (1).

As to item (1), The application became abandoned for failure to timely file a reply within the meaning of 37 CFR 1.113 to the final Office action of February 26, 2002. The proposed reply required for consideration of a petition to revive must be a Notice of Appeal (and appeal fee required by 37 CFR 1.17(b)), an amendment that prima facie places the application in condition for allowance, or the filing of a continuing application. See MPEP 711.03(c)(III)(A)(2). Since the amendment submitted does not prima facie place the application in condition for allowance, the reply required must be a Notice of Appeal (and appeal fee) or the filing of a continuing application. Alternatively, the reply requirement may be met by the filing of a submission under 37 CFR 1.129(a) if the above-identified application is eligible for such transitional practice.

Further correspondence with respect to this matter should be addressed as follows:

By mail: Mail Stop Petitions
PO Box 1450
Alexandria, VA 22313-1450

By facsimile: (703) 308-6916
Attn: Office of Petitions

By hand: Office of Petitions
2201 South Clark Place
Crystal Plaza 4, Suite 3C23
Arlington, VA 22202

Telephone inquiries concerning this decision should be directed to Latrice Bond at (703) 308-6911.

Latrice Bond

Latrice Bond
Paralegal Specialist
Office of Petitions
Office of the Deputy Commissioner
for Patent Examination Policy

Attachment: "Courtesy Copy of Advisory Action"

UNITED STATES PATENT AND TRADEMARK OFFICE

Commissioner for Patents
United States Patent and Trademark Office
P.O. Box 1450
Alexandria, VA 22313-1450
www.uspto.gov

Paper No. 19

Townsend & Townsend and Crew
Two Embarcadero Center, 8th Floor
San Francisco, CA 94111-3834

COPY MAILED

OCT 2 3 2003

OFFICE OF PETITIONS

In re Application of :
Jae H. Anh et al. :
Application No. 09/560,424 :
Filed: April 27, 2000 :
Attorney Docket No. 018563-003500-AT-00073 :

ON PETITION

This is a decision on the renewed petition under 37 CFR 1.137(b), filed October 14, 2003, to revive the above-identified application.

The petition is **GRANTED**.

The two-month period for filing an appeal brief in triplicate (accompanied by the fee required by 37 CFR 1.17(c)), runs from the date of this decision.

The application is being forwarded to Technology Center AU 2671 for further processing.

Telephone inquiries concerning this decision should be directed to Latrice Bond at (703) 308-6911.

Latrice Bond

Latrice Bond
Petitions Examiner
Office of Petitions
Office of the Deputy Commissioner
for Patent Examination Policy

DO NOT SCAN! **Please forward case and paper to address shown below.**

SPE RESPONSE FOR CERTIFICATE OF CORRECTION

Paper No.: _____

DATE : 10-30-06

TO SPE OF : ART UNIT 1641 - PADMANABHAN

SUBJECT : Request for Certificate of Correction for Appl. No.: 09560472 Patent No.: 6884628

Please respond to this request for a certificate of correction within 7 days.

Please review the requested changes/corrections as shown in the attached certificate of correction. Please complete this form (see below) and forward it with the file to:

Certificates of Correction Branch (CofC)
South Tower - 9A22
Palm Location 7580

RoChaun Johnson
Certificates of Correction Branch
703-308-9390 ext. 119

Thank You For Your Assistance

The request for issuing the above-identified correction(s) is hereby:

Note your decision on the appropriate box.

- ☑ **Approved** — All changes apply.
- ☐ **Approved in Part** — Specify below which changes **do not** apply.
- ☐ **Denied** — State the reasons for denial below.

Comments: _____

MARK L. SHIBUYA, PH.D.
SUPERVISORY PATENT EXAMINER

SPE 1641 **Art Unit**

UNITED STATES PATENT AND TRADEMARK OFFICE

UNITED STATES DEPARTMENT OF COMMERCE
United States Patent and Trademark Office
Address: COMMISSIONER FOR PATENTS
P.O. Box 1450
Alexandria, Virginia 22313-1450
www.uspto.gov

3COM CORPORATION
350 CAMPUS DRIVE
MARLBOROUGH, MA 01752-3064

Mail Date: 04/23/2010

Applicant	: Spiro Poulis	: DECISION ON REQUEST FOR
Patent Number	: 7660408	: RECALCULATION of PATENT
Issue Date	: 02/09/2010	: TERM ADJUSTMENT IN VIEW
Appliction No	: 09/560,581	: OF WYETH
Filed	: 04/28/2000	:
		:

The Patentee's Request for Recalculation is **DISMISSED.**

This Request is deemed ineligible for consideration for one or more of the following reasons:

(A). The patent for which PTA recalculation is requested is either a design or reissue application or is a reexamination proceeding;

(B). The patent for which PTA recalculation is requested resulted from a utility or plant application filed under 35 USC 111(a) before May 29, 2000 and no CPA filed in the application on/after May 29, 2000;

(C). The patent for which PTA recalculation is requested resulted from an international application in which the international filing date was before May 29, 2000 and no CPA filed in the application on/after May 29, 2000;

(D). The patent for which PTA recalculation is requested issued on/after March 2, 2010;

(E). The Request for Recalculation was filed more than 180 days after the grant date of the patent and the request was not filed within two months of a dismissal of a request for reconsideration of the of the patent term under 37 CFR 1.705(d);

(F). The Request for Recalculation is not solely limited to USPTO pre-Wyeth interpretation of 35 U.S.C. 154(b)(2)(A);

or

(G). A civil action was filed pursuant to 35 U.S.C. 154(b)(4)(A)concerning the same patent at issue in this request.

Patentee may file a reply to this decision dismissing the Request for Recalculation. Patentee must file such reply within one month or thirty days, whichever is longer, of the mail date of the decision dismissing the Request for Recalculation. No fee is required if patentee is asserting in the reply that the dismissal for ineligibility is improper.

Patentee should use document code PET.OP if electronically filing a reply to this dismissal. If the USPTO finds that the request was improperly deemed ineligible, the USPTO will mail applicant a recalculation determination.

Patentee should be aware that in order to preserve the right to review in the United States District Court for the District of Columbia of the USPTO patent term adjustment determination, patentee must ensure that he or she also take the steps required under 35 U.S.C. 154(b)(4)(A). Nothing in the request for recalculation should be construed as providing an alternative time frame for commencing a civil action under 35 U.S.C. 154 (b)(4)(A).

Any questions concerning this decision should be directed to the Office of Patent Legal Administration at 571-272-7702.

#7

UNITED STATES DEPARTMENT OF COMMERCE
Patent and Trademark Office
ASSISTANT SECRETARY OF COMMERCE AND
COMMISSIONER OF PATENTS AND TRADEMARKS
Washington, DC 2023

August 15, 2002

Thomas A. Fairhall
McDonnell Boehnen Hulbert & Berghoff
300 South Wacker DR
Chicago, IL 60606

In re application of:
DRohit Sachdeva et al
Serial No.: 09/560,584
Filed: April 28, 2000

DECISION ON PETITION

For: SYSTEM AND METHOD OF MAPPING A SURFACE

This is a decision on the petition received July 1, 2002, to withdraw the holding of abandonment in the above-identified application.

The above-identified application became abandoned for failure to reply within the meaning of 37 C.F.R. 1.113 in a timely manner to the Notice to File Missing Parts of Application mailed July 13, 2000. Which set a shortened statutory period for rely of two (2) months. Accordingly, this application became abandoned September 14, 2000. A notice of abandonment was mailed June 3, 2002.

On July 1, 2002, the office received a communication from the attorney of record. Enclosed was an acknowledgment that counsel responded to the Notice of Missing Parts on August 30, 2000.

The evidence submitted is sufficient to establish that the petitioners did respond to the Notice of Missing Parts on August 30, 2000.

The necessary fees to complete the application will be charged to Deposit Account 50-0746.

The application has been completed for release to Technology Center 2755.

Telephone inquiries concerning this matter may be directed to Doshie E. Day at (703) 308-3640.

Doshie Day

Doshie E. Day
Program Management Assistant
Office Initial Patent Examination.

UNITED STATES PATENT AND TRADEMARK OFFICE

Commissioner for Patents
United States Patent and Trademark Office
P.O. Box 1450
Alexandria, VA 22313-1450
www.uspto.gov

DORSEY & WHITNEY LLP
INTELLECTUAL PROPERTY DEPARTMENT
SUITE 3400
1420 FIFTH AVENUE
SEATTLE, WA 98101

COPY MAILED

MAY 18 2007

OFFICE OF PETITIONS

In re Application of Geering :
Application No. 09/560,660 : Decision on Petition
Filing Date: April 27, 2000 :
Attorney Docket No. M99-41850 :

This is a decision on the petition under 37 CFR 1.181, filed August 3, 2004, to withdraw the holding of abandonment. The Office regrets the delay in the issuance of the instant decision.

The petition is **granted.**

A non-final Office action was mailed December 31, 2003. The Office action set a shortened statutory period for reply of three (3) months.

A reply to the Office action was not matched with the file. As a result, a Notice of Abandonment was mailed July 13, 2004.

Petitioner contends a timely reply was filed in response to the non-final Office action.

Petitioner has supplied a copy of the amendment mailed July 30, 2004. The amendment bears a proper certificate of mailing in compliance with the requirements of 37 C.F.R. 1.8(a). The petition complies with the requirements set forth in 37 CFR 1.8(b). In view thereof the amendment is considered timely filed.

The Notice of Abandonment is hereby vacated and the holding of abandonment withdrawn.

Technology Center Art Unit 3624 will be informed of the instant decision and the examiner will consider the merits of the amendment in due course.

Telephone inquiries regarding this communication should be directed to Petitions Attorney Steven Brantley at (571) 272-3203.

Charles Steven Brantley
Senior Petitions Attorney
Office of Petitions

UNITED STATES PATENT AND TRADEMARK OFFICE

COMMISSIONER FOR PATENTS
UNITED STATES PATENT AND TRADEMARK OFFICE
P.O. BOX 1450
ALEXANDRIA, VA 22313-1450
www.uspto.gov

MAIL

Paper No. 14

JUL 21 2004

DIRECTOR OFFICE
TECHNOLOGY CENTER 2600

COOLEY GODWARD, LLP
3000 EL CAMINO REAL
5 PALO ALTO SQUARE
PALO ALTO, CA 94306

In re Application of
Nevo et al.

Application No. 09/560,672
Filed: April 27, 2000
For: MULTIPLE WIRELESS COMMUNICATION PROTOCOL METHODS AND APPARATUSES INCLUDING PROACTIVE REDUCTION OF INTERFERENCE

DECISION ON REQUEST TO WITHDRAW FROM RECORD

This is a decision on the Request for Withdrawal as attorney or agent and change of address filed on June 1, 2004.

A grantable request to withdraw as attorney/agent of record must:
(1) indicate the present mailing address of the attorney(s)/agent(s) who seek(s) to withdraw, and
(2) be signed by each attorney/agent seeking to withdraw or clearly be signed on their behalf, and
(3) be *approved* at least thirty (30) days prior to the maximum extendable period for response to any outstanding Office Action, and
(4) indicate the address to which future correspondence should be mailed.

Petitioner has met all of the above. Accordingly, the request is **GRANTED**.

All attorneys/agents associated with Customer Number 23419 have been withdrawn.

All future communications from the Office will be directed to the address listed below until otherwise notified by applicant. Applicant is reminded of the obligation to promptly notify the Patent and Trademark Office of any change in correspondence address to ensure receipt of all communications from the Office.

Dwayne Bost
Special Program Examiner
Technology Center 2600
Communications
(703) 305-4778

CC: Intel Corporation
Mailstop SC4/202
2200 Mission College Boulevard
Santa Clara, CA 95052

UNITED STATES PATENT AND TRADEMARK OFFICE

UNITED STATES DEPARTMENT OF COMMERCE
United States Patent and Trademark Office
Address: COMMISSIONER FOR PATENTS
P.O. Box 1450
Alexandria, Virginia 22313-1450
www.uspto.gov

SEYFARTH SHAW LLP
131 S. DEARBORN ST., SUITE 2400
CHICAGO, IL 60603-5803

Mail Date: 07/02/2010

Applicant	: John Leagh Beadell	: DECISION ON REQUEST FOR
Patent Number	: 6709324	: RECALCULATION of PATENT
Issue Date	: 03/23/2004	: TERM ADJUSTMENT IN VIEW
Application No	: 09/560,709	: OF WYETH
Filed	: 04/27/2000	:
		:

The Patentee's Request for Recalculation is **DISMISSED.**

This Request is deemed ineligible for consideration for one or more of the following reasons:

(A). The patent for which PTA recalculation is requested is either a design or reissue application or is a reexamination proceeding;

(B). The patent for which PTA recalculation is requested resulted from a utility or plant application filed under 35 USC 111(a) before May 29, 2000 and no CPA filed in the application on/after May 29, 2000;

(C). The patent for which PTA recalculation is requested resulted from an international application in which the international filing date was before May 29, 2000 and no CPA filed in the application on/after May 29, 2000;

(D). The patent for which PTA recalculation is requested issued on/after March 2, 2010;

(E). The Request for Recalculation was filed more than 180 days after the grant date of the patent and the request was not filed within two months of a dismissal of a request for reconsideration of the of the patent term under 37 CFR 1.705(d);

(F). The Request for Recalculation is not solely limited to USPTO pre-Wyeth interpretation of 35 U.S.C. 154(b)(2)(A);

or

(G). A civil action was filed pursuant to 35 U.S.C. 154(b)(4)(A)concerning the same patent at issue in this request.

Patentee may file a reply to this decision dismissing the Request for Recalculation. Patentee must file such reply within one month or thirty days, whichever is longer, of the mail date of the decision dismissing the Request for Recalculation. No fee is required if patentee is asserting in the reply that the dismissal for ineligibility is improper.

Patentee should use document code PET.OP if electronically filing a reply to this dismissal. If the USPTO finds that the request was improperly deemed ineligible, the USPTO will mail applicant a recalculation determination.

Patentee should be aware that in order to preserve the right to review in the United States District Court for the District of Columbia of the USPTO patent term adjustment determination, patentee must ensure that he or she also take the steps required under 35 U.S.C. 154(b)(4)(A). Nothing in the request for recalculation should be construed as providing an alternative time frame for commencing a civil action under 35 U.S.C. 154 (b)(4)(A).

Any questions concerning this decision should be directed to the Office of Patent Legal Administration at 571-272-7702.

UNITED STATES PATENT AND TRADEMARK OFFICE

UNITED STATES DEPARTMENT OF COMMERCE
United States Patent and Trademark Office
Address: COMMISSIONER OF PATENTS AND TRADEMARKS
Washington, D.C. 20231
www.uspto.gov

APPLICATION NO.	FILING DATE	FIRST NAMED INVENTOR	ATTORNEY DOCKET NO.	CONFIRMATION NO.
09/560,761	04/28/2000	Dean Della Penna	1095R	5179

27310 7590 05/20/2002

PIONEER HI-BRED INTERNATIONAL INC.
7100 N.W. 62ND AVENUE
P.O. BOX 1000
JOHNSTON, IA 50131

EXAMINER
EINSMANN, JULIET CAROLINE

ART UNIT	PAPER NUMBER
1634	17

DATE MAILED: 05/20/2002

Please find below and/or attached an Office communication concerning this application or proceeding.

Attachment III: Template Decision for Granting Petition to Withdraw Holding of Abandonment

UNITED STATES PATENT AND TRADEMARK OFFICE

COMMISSIONER FOR PATENTS
UNITED STATES PATENT AND TRADEMARK OFFICE
WASHINGTON, D.C. 20231
www.uspto.gov

Paper No. 17

In re Application of Dean Della Penna Application No. 09/560,761 Filed: April 28, 2000 Attorney Docket No. 1095R	: : DECISION GRANTING PETITION : TO WITHDRAW HOLDING OF : ABANDONMENT :

This is a decision on the petition filed on May 3, 2002, requesting withdrawal of the holding of abandonment of the above-identified application because the applicant did not receive the Office communication mailed on October 24, 2001 at the correspondence address of record.

The petition is granted.

Petitioner provided a statement that the Office communication in question was not received at the correspondence address of record. The Office communication was mailed between October 13, 2001 and January 2, 2002, when delivery of mail from the Office to certain regions of the country was delayed.

Accordingly, the application is not abandoned in fact because the applicant did not receive the Office communication. The Notice of Abandonment is hereby vacated and the holding of abandonment withdrawn.

The Office communication will be remailed and the shortened statutory period that was originally set forth in the Office communication shall be restarted to run from the mail date of the newly supplied Office action or notice.

Cecilia Tsang

Cecilia Tsang, Special Program Examiner,
Technology Center 1600
(703) 308-0254

UNITED STATES PATENT AND TRADEMARK OFFICE

MAILED

MAR 2 6 2002

DIRECTOR'S OFFICE
TECHNOLOGY CENTER 2100

Commissioner for Patents
United States Patent and Trademark Office
Washington, D.C. 20231
www.uspto.gov

Paper No. 6

Kevin K. Johanson
WORKMAN, NYDEGGER & SEELY
1000 Eagle Gate Tower
60 East South Temple
Salt Lak City, UT 84111

In re Application of: Danne L. Buchanan et al.	)	**DECISION ON PETITION FOR ACCELERATED EXAMINATION UNDER M.P.E.P. §708.02(VIII)**
Application No. 09/560,779	)	
Filed: April 28, 2000	)	
For: METHOD AND SYSTEM FOR PROCESSING FINANCIAL INSTRUMENT DEPOSITS PHYSICALLY REMOTE FROM A FINANCIAL INSTITUTION	)	

This is a decision on the petition, filed July 28, 2000 under 37 C.F.R. §1.102(d) and M.P.E.P. §708.02(VIII): Accelerated Examination, to make the above-identified application special.

M.P.E.P. §708.02, Section VIII which sets out the prerequisites for a grantable petition for Accelerated Examination under 37 C.F.R. §1.102(d) states in relevant part:

A new application (one which has not received any examination by the examiner) may be granted special status provided that applicant (and this term includes applicant's attorney or agent) complies with each of the following items:

(a) Submits a petition to make special accompanied by the fee set forth in 37 CFR 1.17(i);

(b) Presents all claims directed to a single invention, or if the Office determines that all the claims presented are not obviously directed to a single invention, will make an election without traverse as a prerequisite to the grant of special status.

(c) Submits a statement(s) that a pre - examination search was made, listing the field of search by class and subclass, publication, Chemical Abstracts, foreign patents, etc. A search made by a foreign patent office satisfies this requirement;

(d) Submits one copy each of the references deemed most closely related to the subject matter encompassed by the claims if said references are not already of record; and

(e) Submits a detailed discussion of the references, which discussion points out, with the particularity required by 37 CFR 1.111(b) and (c), how the claimed subject matter is patentable over the references.

In those instances where the request for this special status does not meet all the prerequisites set forth above, ***applicant will be notified and the defects in the request will be stated.*** The application will remain in the status of a new application awaiting action in its regular turn. In those instances where a request is defective in one or more respects, applicant will be given one opportunity to perfect the request in a renewed petition to make special. If perfected, the request will then be granted. If not perfected in the first renewed petition, any additional renewed petitions to make special may or may not be considered at the discretion of the Group Special Program Examiner.

Applicant's submission is deficient in that there is no detailed discussion of the references as required by section (e) to the extent required by 37 CFR 1.111(b) and (c). Applicant's submission merely presents a general description for each of the sixteen references purported to be "most closely related" followed by what ***appears*** to be a description of the claimed invention. The discussion does not clearly point out the patentable novelty which the claims present in view of the references cited with the particularity required by 37 CFR 1.111(b) and (c).

Accordingly, the Petition is **DISMISSED**. The application file is being forwarded to Central Files to await examination in its proper turn based on its effective filing date.

Any request for reconsideration must be filed within two months of the mailing date of this decision.

Vincent N. Trans
Special Programs Examiner
Technology Center 2100
Computer Architecture, Software, and Electronic Commerce
(703) 305-9750

UNITED STATES PATENT AND TRADEMARK OFFICE

COMMISSIONER FOR PATENTS
UNITED STATES PATENT AND TRADEMARK OFFICE
WASHINGTON, D.C. 20231
www.uspto.gov

Paper No. 9

TOWNSEND & TOWNSEND & CREW
TWO EMBARCADERO CENTER
8TH FLOOR
SAN FRANCISCO, CA 94111

COPY MAILED

APR 16 2002

OFFICE OF PETITIONS

In re Application of	:	
Kazutoshi Okuno et al	:	
Application No. 09/560,780	:	ON PETITION
Filed: April 28, 2000	:	
Attorney Docket No. 85761-000510US	:	

This is a decision on the petition under 37 CFR 1.137(b), filed March 28, 2002, to revive the above-identified application.

The petition is **GRANTED**.

The above-identified application became abandoned for failure to reply in a timely manner to the Notice to File Missing Parts of Application (Notice) mailed July 9, 2000. The Notice set a period for reply of two (2) months from the mail date of the Notice. Extensions of time under the provisions of 37 CFR 1.136(a) were obtained. Accordingly, the above-identified application became abandoned on February 10, 2001.

Telephone inquiries concerning this decision should be directed to Wan Laymon at (703) 305-9282.

The application file is being forwarded to Initial Patent Examination Division.

Wan Laymon

Wan Laymon
Petitions Examiner
Office of Petitions
Office of the Deputy Commissioner
for Patent Examination Policy

UNITED STATES PATENT AND TRADEMARK OFFICE

Commissioner for Patents
United States Patent and Trademark Office
P.O. Box 1450
Alexandria, VA 22313-1450
www.uspto.gov

LEE & HAYES PLLC
421 W RIVERSIDE AVENUE SUITE 500
SPOKANE WA 99201

COPY MAILED

MAR 3 1 2008

OFFICE OF PETITIONS

In re Application of		
Shum, et al.	:	
Application No. 09/560,828	:	DECISION ON
Filed: April 28, 2000	:	PETITION
Attorney Docket No. MS1-476US	:	

This is in response to the renewed petition to withdraw the holding of abandonment under 37 CFR 1.181, filed November 29, 2007.

The petition under 37 CFR 1.181 is **GRANTED**.

The above-identified application became abandoned for failure to timely file the issue fee in response to the Notice of Allowance, mailed January 14, 2003. This Notice set a statutory period for reply of three (3) months for issue fee transmittal. No issue having been received, the application became abandoned on April 15, 2003. The Office mailed a Notice of Abandonment on May 20, 2003. Applicants filed a petition to withdraw the holding of abandonment on June 20, 2003. However, the petition was dismissed in a decision mailed on October 1, 2007. The decision pointed out that petitioner did demonstrate that he timely responded to the Notice of Allowance on April 10, 2003, and included a proper authorization to charge the issue fee to his deposit account. However, the decision requested that petitioner show that sufficient funds were present in the deposit account for the date in question.

On renewed petition, petitioner has provided a Deposit Account Statement for April, 2003. The statement shows that at all times during the month, there was a sufficient balance in the account to charge the issue fee.

Given the basis for granting this petition, the $1300 fee for the petition under 37 CFR 1.137(b) will be refunded to petitioner under separate cover.

The file is being forwarded to the Office of Patent Publication for processing into a patent.

Telephone inquiries related to this decision should be directed to the undersigned at 571-272-3207.

Cliff Congo
Petitions Attorney
Office of Petitions

UNITED STATES PATENT AND TRADEMARK OFFICE

Commissioner for Patents
United States Patent and Trademark Office
P.O. Box 1450
Alexandria, VA 22313-1450
www.uspto.gov

LEE & HAYES PLLC
421 W RIVERSIDE AVENUE SUITE 500
SPOKANE WA 99201

COPY MAILED

OCT 01 2007

OFFICE OF PETITIONS

In re Application of		
Shum, et al.	:	
Application No. 09/560,828	:	DECISION ON
Filed: April 28, 2000	:	PETITION
Attorney Docket No. MS1-476US	:	

This is in response to the petition to withdraw the holding of abandonment under 37 CFR 1.181, or in the alternative to revive under 37 CFR 1.137(b), filed June 20, 2003. The petition was recently forwarded to the Office of Petitions for consideration. The Office apologizes for the delay.

The petition under 37 CFR 1.181 is **DISMISSED**.

Any request for reconsideration of this decision must be submitted within **TWO (2) MONTHS** from the mail date of this decision. The reconsideration request should include a cover letter entitled "Renewed Petition under 37 CFR 1.181". Extensions of time under 37 CFR 1.136(a) are permitted.

The above-identified application became abandoned for failure to timely file the issue fee in response to the Notice of Allowance, mailed January 14, 2003. This Notice set a statutory period for reply of three (3) months for issue fee transmittal. No issue having been received, the application became abandoned on April 15, 2003. The Office mailed a Notice of Abandonment on May 20, 2003.

Petitioner states that he timely filed an issue fee transmittal form in response to the Notice of Allowance. In support thereof, petitioner has included a copy of a USPTO date stamped postcard receipt, identifying this application, itemizing an issue fee transmittal, and bearing a USPTO date stamp of April 10, 2003.

A postcard receipt which itemizes and properly identifies the items which are being filed serves as *prima facie* evidence of receipt in the Office of all items listed thereon on the date stamped thereon by the Office. See MPEP 503.

Petitioner admits that while the issue fee transmittal contained an authorization to charge the fee to a deposit account, petitioner inadvertently omitted the deposit account number. Nevertheless, petitioner draws the Office's attention to 37 CFR 1.311(b), which states:

> An authorization to charge the issue fee or other post-allowance fees set forth in § 1.18 to a deposit account may be filed in an individual application only after mailing of the notice of allowance. The submission of either of the following after the mailing of a notice of allowance will operate as a request to charge the correct issue fee or any publication fee due to any deposit account identified in a previously filed authorization to charge such fees:
>
> (1) An incorrect issue fee or publication fee; or
>
> (2) A fee transmittal form (or letter) for payment of issue fee or publication fee.

Accordingly, it is concluded that petitioner has demonstrated that he filed a proper and timely response to the Notice of Allowance. However, to merit withdrawing the holding of abandonment, petitioner must demonstrate that the deposit account in question contained a sufficient balance to charge the issue fee at the time the issue fee transmittal was filed.

Accordingly, the petition is dismissed without prejudice pending petitioner's submission of a deposit account balance statement for the time period in question. If petitioner can not submit such evidence, petitioner should so notify the Office and the petition to revive under 37 CFR 1.137(b) will be considered.

Further correspondence with respect to this matter should be addressed as follows:

By mail: Mail Stop Petitions
Commissioner for Patents
P.O. Box 1450
Alexandria VA 22313-1450

By FAX: (571)273-8300
Attn: Office of Petitions

Telephone inquiries related to this decision should be directed to the undersigned at 571-272-3207.

Cliff Congo

Cliff Congo
Petitions Attorney
Office of Petitions

UNITED STATES PATENT AND TRADEMARK OFFICE

Commissioner for Patents
United States Patent and Trademark Office
P.O. Box 1450
Alexandria, VA 22313-1450
www.uspto.gov

JAN 14 2005

LEXICON GENETICS INCORPORATED
8800 TECHNOLOGY FOREST PLACE
THE WOODLANDS TX 77381-1160

In re Application of: Nehls et al. Serial No.: 09/560,863 Filed: april 28, 2000 Attorney Docket No.: LEX-0018-USA	DECISION ON PETITION TO WITHDRAW THE HOLDING OF ABANDONMENT

This is in response to applicants' petition under 37 CFR § 1.181(a) filed on January 6, 2004, requesting withdrawal of the holding of abandonment based on the timely filing of a response to the Notice of Appeal of February 4, 2003. The delay in responding to this petition is regretted.

A review of the file history shows that the examiner mailed a final Office action to applicants on September 29, 2002, setting a three-month statutory time period for reply. Subsequently, applicants filed a Notice of Appeal on February 4, 2003. On November 4, 2003, the examiner mailed a notice of abandonment for failure to file an Appeal Brief.

Applicants state that an Appeal Brief and Petition for a three-month extension of time were timely filed on July 7, 2003 as evidenced by a copy of the date-stamped receipt card. In view of this evidence, applicants are considered to have submitted a timely reply.

Applicants' petition is **GRANTED** retroactively as this application is no longer in abandoned status due to receipt of the Appeal Brief of July 7, 2003. The application will be forwarded to the examiner for consideration of the Appeal Brief of July 7, 2003.

Should there be any questions about this decision, please contact Marianne C. Seidel by letter addressed to Director, TC 1600, at the address listed above, or by telephone at 571-272-0584 or by facsimile at 703-872-9306.

Marianne C. Seidel for

Jasemine C. Chambers
Director, Technology Center 1600

SPE RESPONSE FOR CERTIFICATE OF CORRECTION

Paper No.: _____

DATE : 5-6-08

TO SPE OF : ART UNIT 1755

SUBJECT : Request for Certificate of Correction on Patent No.: 6797517

A response is requested with respect to the accompanying request for a certificate of correction.

Please complete this form and return with file, within **7** days to:
Certificates of Correction Branch - PK 3-915
Palm location **7580** - Tel. No. 305-8309

With respect to the change(s) requested, correcting Office and/or Applicant's errors, should the patent read as shown in the certificate of correction? No new matter should be introduced, nor should the scope or meaning of the claims be changed.

Please check Drawings

Thank You For Your Assistance

Certificates of Correction Branch

The request for issuing the above-identified correction(s) is hereby:
Note your decision on the appropriate box.

- ☑ **Approved** — **All** changes apply.
- ☐ **Approved in Part** — Specify below which changes **do not** apply.
- ☐ **Denied** — State the reasons for denial below.

Comments:

NONE

1755
Art Unit

SPE
L.A. LORENGO
SUPERVISORY PATENT EXAMINER

UNITED STATES PATENT AND TRADEMARK OFFICE

CERTIFICATE OF CORRECTION

PATENT No. : **6,797,517 B1**

DATED : 28 September 2004

INVENTOR(S): Koichi HOSHI, et al.

It is certified that error appears in the above-identified patent and that said Letters Patent is hereby corrected as shown below:

Figure 6, first text box, change "cotrol" to -- control --;

Figure 7, second text box, change "sutisfied" to -- satisfied --;

Column 6, line 49, change "monixide" to -- monoxide --;

Column 20, line 51, after "catalyst" insert -- providing --;

Column 21, line 1, change "connection" to -- correction --;

Column 21, line 4, after "from" insert -- the --;

Column 21, line 33, after "component" insert -- contained --;

Column 22, lines 26-27, after "detecting", delete "accumulation" and insert -- device accumulates --.

MAILING ADDRESS OF SENDER:

Patent No.: 6,797,517 B1

David J. Zibelli
KENYON & KENYON
1500 K Street, N.W., Suite 700
Washington, DC 20005

UNITED STATES PATENT AND TRADEMARK OFFICE

COMMISSIONER FOR PATENTS
UNITED STATES PATENT AND TRADEMARK OFFICE
WASHINGTON, D.C. 20231
www.uspto.gov

Paper No. 6

JOHN J. STICKEVERS
BROMBERG & SUNSTEIN LLP
125 SUMMER STREET
BOSTON , MA 02110

COPY MAILED

MAR 0 6 2001

OFFICE OF PETITIONS
A/C PATENTS

In re Application of
Collins and Price
Application No. 09/561,043
Filed: April 28, 2000
For: Apparatus and Method for
Facilitating Agreement Over a Network

DECISION ACCORDING
STATUS UNDER 37 CFR 1.47(a)

This is in response to the Petition under 37 CFR 1.47(a), filed November 6, 2000 (certificate of mailing November 1, 2000).

The petition is **GRANTED**.

Petitioner has shown that the non-signing inventor has refused to join in the filing of the above-identified application after having been presented with the application papers. Specifically, John J. Stickevers, attorney of record, established that Mr. Price, the non-signing inventor, was mailed the application papers, but refused to sign the declaration.

The above-identified application and papers have been reviewed and found in compliance with 37 CFR 1.47(a). This application is hereby accorded Rule 1.47(a) status.

As provided in Rule 1.47(a), this Office will forward notice of this application's filing to the non-signing inventor at the address given in the petition. Notice of the filing of this application will also be published in the Official Gazette.

The application file is being forwarded to the Office of Initial Patent Examination for further processing.

Telephone inquiries regarding this decision should be directed to Petitions Attorney Scott M. Ledford at (703) 306-5593.

Beverly M. Flanagan
Supervisory Petitions Examiner
Office of Petitions
Office of the Deputy Commissioner
for Patent Examination Policy

UNITED STATES PATENT AND TRADEMARK OFFICE

COMMISSIONER FOR PATENTS
UNITED STATES PATENT AND TRADEMARK OFFICE
WASHINGTON, D.C. 20231
www.uspto.gov

ALAN PRICE
15 CORPORAL BURNS ROAD
CAMBRIDGE, MA 02138

COPY MAILED

MAR 0 6 2001

OFFICE OF PETITIONS
A/C PATENTS

In re Application of
Collins and Price
Application No. 09/561,043
Filed: April 28, 2000
For: Apparatus and Method for
Facilitating Agreement Over a Network

LETTER

Dear Mr. Price:

You are named as a joint inventor in the above-identified United States patent application filed under the provisions of 35 U.S.C. 116 (United States Code) and 37 CFR 1.47(a), Rules of Practice in Patent Cases. Should a patent be granted on the application you will be designated therein as a joint inventor.

As a named inventor you are entitled to inspect any paper in the file wrapper of the application, order copies of all or any part thereof (at a prepaid cost per 37 CFR 1.19) or make your position of record in the application. Alternatively, you may arrange to do any of the preceding through a registered patent attorney or agent presenting written authorization from you. If you care to join the application, counsel of record (see below) would presumably assist you. Joining in the application would entail the filing of an appropriate oath or declaration by you pursuant to 37 CFR 1.63.

Telephone inquiries regarding this communication should be directed to Petitions Attorney Scott M. Ledford at (703) 306-5593. Requests for information regarding your application should be directed to the File Information Unit at (703) 308-2733. Information regarding how to pay for and order a copy of the application, or a specific paper in the application, should be directed to Certification Division at (703) 308-9726 or 1-800-972-6382 (outside the Washington D.C. area).

Beverly M. Flanagan
Supervisory Petitions Examiner
Office of Petitions
Office of the Deputy Commissioner
for Patent Examination Policy

cc.: JOHN J. STICKEVERS
BROMBERG & SUNSTEIN LLP
125 SUMMER STREET
BOSTON, MA 02110

NOTICE RE: CERTIFICATES OF CORRECTION

DATE : **July 24, 2002** **Paper No.: 15**

TO : **Supervisor, Art Unit 3738**

SUBJECT : Certificate of Correction Request in Patent No.: 6,309,412

A response to the following question is requested with respect to the accompanying request for a certificate of correction.

With respect to the change(s) requested, correcting Office and/or Applicant's errors, should the patent read as shown in the certificate of correction? No new matter should be introduced, nor should the scope or meaning of the claims be changed.

Ernest C. White, LIE
(703) 305- 8339

PLEASE COMPLETE THIS FORM AND RETURN WITH FILE, WITHIN 7 DAYS, TO CERTIFICATES OF CORRECTION BRANCH - PK 3-915/922 PALM LOCATION 7580 - TEL. N0. 305-8309

THANK YOU FOR YOUR ASSISTANCE!

Note your decision by placing a check mark in the appropriate box below, indicating whether all changes requested in the Request for Certificate of Correction should be applied. Please specify which changes should not be applied and indicate the reason(s) for denial, in the "Comments" section below.

☑ **YES** ☐ **NO**

☐ **Comments:** _____

Cori McDuff — **Supervisor**

3738 — **Art Unit**

UNITED STATES PATENT AND TRADEMARK OFFICE

COMMISSIONER FOR PATENTS
UNITED STATES PATENT AND TRADEMARK OFFICE
P.O. BOX 1450
ALEXANDRIA, VA 22313-1450
www.uspto.gov

HAMILTON, BROOK, SMITH & REYNOLDS, P.C.
530 VIRGINIA ROAD
P.O. BOX 9133
CONCORD, MA 01742-9133

COPY MAILED

MAY 2 4 2005

OFFICE OF PETITIONS

In re Application of :
Bhavannarayana Sri Nrusimha Nelakanti, et al. :
Application No. 09/561,100 :
Filed: April 28, 2000 :
Attorney Docket No. JETC1014DEL :

ON PETITION

This is a decision on the petition, filed May 11, 2005, under 37 CFR 1.313(c)(2) to withdraw the above-identified application from issue after payment of the issue fee.

The petition is **GRANTED**.

The above-identified application is withdrawn from issue for consideration of a submission under 37 CFR 1.114 (request for continued examination). See 37 CFR 1.313(c)(2).

Petitioner is advised that the issue fee paid on April 28, 2005, in the above-identified application cannot be refunded. If, however, the above-identified application is again allowed, petitioner may request that it be applied towards the issue fee required by the new Notice of Allowance. [1]

Telephone inquiries relating to this decision should be directed to the undersigned at (571) 272-3204.

The application is being referred to Technology Center AU 2684 for further processing of the request for continued examination under 37 CFR 1.114.

Sherry D. Brinkley
Petitions Examiner
Office of Petitions
Office of the Deputy Commissioner
for Patent Examination Policy

[1] The request to apply the issue fee to the new Notice may be satisfied by completing and returning the new Issue Fee Transmittal Form PTOL-85(b), which includes the following language thereon: "Commissioner for Patents is requested to apply the Issue Fee and Publication Fee (if any) or re-apply any previously paid issue fee to the application identified above." Petitioner is advised that, whether a fee is indicated as being due or not, the Issue Fee Transmittal Form **must** be completed and timely submitted to avoid abandonment. Note the language in bold text on the first page of the Notice of Allowance and Fee(s) Due (PTOL-85).

UNITED STATES PATENT AND TRADEMARK OFFICE

Commissioner for Patents
United States Patent and Trademark Office
P.O. Box 1450
Alexandria, VA 22313-1450
www.uspto.gov

Date : May 23, 2005

TO : Director, Office of Patent Publication

FROM : Office of the Deputy Commissioner
for Patent Examination Policy

SUBJECT : Withdrawal from Issue of

Applicant(s) : Bhavannarayana Sri Nrusimha Nelakanti, et al.
Application No. : 09/561,100
Filed : April 28, 2000

The above-identified application has been assigned Patent No. 6,904,297 and an issue date of June 7, 2005.

It is hereby directed that this application be withdrawn from issue at the request of the applicant.

Do not refund the issue fee.

The following erratum should be published in the Official Gazette if the above-identified application is published in the OG of June 7, 2005:

"All reference to Patent No. 6,904,297 to BHAVANNARAYANA SRI NRUSIMHA NELAKANTI, ET AL.of CALIFORNIA for METHOD AND APPARATUS FOR INTER-CELL HANDOVER IN WIRELESS NETWORKS USING MULTIPLE PROTOCOLS appearing in the Official Gazette of June 7, 2005, should be deleted since no patent was granted."

Sherry D. Brinkley
Petitions Examiner
Office of Petitions
Office of the Deputy Commissioner
for Patent Examination Policy

cc: Paul Harrison, Crystal Park 3-44l (FAX-306-2737)
Deneise Boyd, Crystal Park 2, Suite 1100 (FAX-308-5413)
Mary Louise McAskill, Crystal Park 3-910 (FAX 305-4372)
Niomi Farmer, Crystal Park 3-9l0 (FAX-305-4372)
Mary E. Johnson (Cookie), P/OCS, CM1-6D07
Duane K.Davis, P/OCS, CM1-6A07
Tamara K. Greene, PK3-910

UNITED STATES PATENT AND TRADEMARK OFFICE

Commissioner for Patents
United States Patent and Trademark Office
P.O. Box 1450
Alexandria, VA 22313-1450
www.uspto.gov

GARDERE WYNNE SEWELL LLP
1601 ELM STREET
SUITE 3000
DALLAS TX 75201

COPY MAILED

APR 08 2005

OFFICE OF PETITIONS

ON PETITION

In re Application of :
Thomas D. Hite et al :
Application No. 09/561,105 :
Filed: April 28, 2000 :
Attorney Docket No. 1521.111 :

This is a decision on the petition, filed April 8, 2005, under 37 CFR 1.313(c)(2) to withdraw the above-identified application from issue after payment of the issue fee.

The petition is **GRANTED**.

The above-identified application is withdrawn from issue for consideration of a submission under 37 CFR 1.114 (request for continued examination). See 37 CFR 1.313(c)(2).

Petitioner is advised that the issue fee paid on March 7, 2005 in the above-identified application cannot be refunded. If, however, the above-identified application is again allowed, petitioner may request that it be applied towards the issue fee required by the new Notice of Allowance.[1]

Telephone inquiries should be directed to the undersigned at (571) 272-3208.

The examiner of Technology Center AU 2144 will consider the request for continued examination under 37 CFR 1.114.

Karen Creasy

Karen Creasy
Petitions Examiner
Office of Petitions
Office of the Deputy Commissioner
for Patent Examination Policy

---

[1] The request to apply the issue fee to the new Notice may be satisfied by completing and returning the new Issue Fee Transmittal Form PTOL-85(b), which includes the following language thereon: "Commissioner for Patents is requested to apply the Issue Fee and Publication Fee (if any) or re-apply any previously paid issue fee to the application identified above." Petitioner is advised that, whether a fee is indicated as being due or not, the Issue Fee Transmittal Form **must** be completed and timely submitted to avoid abandonment. Note the language in bold text on the first page of the Notice of Allowance and Fee(s) Due (PTOL-85).

UNITED STATES PATENT AND TRADEMARK OFFICE

COMMISSIONER FOR PATENTS
UNITED STATES PATENT AND TRADEMARK OFFICE
P.O. BOX 1450
ALEXANDRIA, VA 22313-1450
www.uspto.gov

Paper No. _____

Date : April 8, 2005

TO : Director, Office of Patent Publication

FROM : Office of the Deputy Commissioner
for Patent Examination Policy

SUBJECT : Withdrawal from Issue of

Applicant(s) :Thomas D. Hite et al
Application No. :09/561,105
Filed :April 28, 2000

The above-identified application has been assigned Patent No. 6,883,027 and an issue date of April 19, 2005.

It is hereby directed that this application be withdrawn from issue at the request of the applicant.

Do not refund the issue fee.

The following erratum should be published in the Official Gazette if the above-identified application is published in the OG of April 19, 2005:

"All reference to Patent No. 6,883,027 to Thomas D. Hite et al of Texas for INTERNET CONTROL SYSTEM AND METHOD appearing in the Official Gazette of April 19, 2005 should be deleted since no patent was granted."

Karen Creasy

Karen Creasy
Petitions Examiner
Office of Petitions
Office of the Deputy Commissioner
for Patent Examination Policy

cc: Paul Harrison, MDW-4B03, (FAX-273-5468
Deneise Boyd, MDE-3D39 (FAX-273-5124)
Mary Louise McAskill, ST-8C15 (FAX 305-4372)
Niomi Farmer, ST-8C14 (FAX-305-4372)
Mary E. Johnson (Cookie), MDE-7C71 (FAX 273-0038)
Duane Davis P/OPC MDE-7D89
Tamara Greene, ST-8C13

UNITED STATES PATENT AND TRADEMARK OFFICE

COMMISSIONER FOR PATENTS
UNITED STATES PATENT AND TRADEMARK OFFICE
P.O. BOX 1450
ALEXANDRIA, VA 22313-1450
www.uspto.gov

IBM CORP (YA)
C/O YEE & ASSOCIATES PC
P.O. BOX 802333
DALLAS TX 75380

COPY MAILED

FEB 10 2006

OFFICE OF PETITIONS

In re Application of	:	
Rodriguez et al.	:	DECISION ON PETITION TO
Application No. 09/561,183	:	WITHDRAW HOLDING OF
Filed: 27 April, 2000	:	ABANDONMENT
Atty Docket No. AUS000175US1	:	

This is a decision on the petition filed on 23 January, 2006, to withdraw the holding of abandonment in the above-identified application.

The petition is **DISMISSED**.

The application was held abandoned for failure to timely respond to the non-final Office action mailed on 30 March, 2004. Notice of Abandonment was mailed on 31 January, 2005. A paper entitled "Response to Notice of Abandonment" requesting withdrawal of the holding of abandonment was first filed on 28 February, 2005, but was apparently not treated as a petition. As such, the present petition is considered timely filed.

Petitioners assert that an amendment was timely filed. In support, petitioner has supplied a copy of an amendment, the first page of which contains a Certificate of Facsimile Transmission dated 23 June, 2004.

Any petition to withdraw the holding of abandonment based on a Certificate of Transmission by facsimile must include the following requirements:

(1) A copy of the original response bearing a signed Certificate of Transmission which includes the date of signing; and

(2) A statement under 37 CFR 1.8(b)(3) attesting to the personal knowledge of transmitting the ***original*** response on the date indicated on the Certificate of Transmission (*see* 37 CFR 1.8 and MPEP 512).

The petition lacks item (2) above. Petitioners should supply a statement by Amy Miller, the individual who signed the Certificate of Transmission.

Any request for reconsideration must be filed within **TWO MONTHS** of the date of this decision. **This period may not be extended.**[1]

Further correspondence with respect to this matter should be addressed as follows:

By mail: Mail Stop Petition
Commissioner for Patents
P.O. Box 1450
Alexandria, VA 22313-1450

By FAX: (571) 273-8300
Attn: Office of Petitions

By hand: Customer Service Window
Mail Stop Petition
Randolph Building
401 Dulany Street
Alexandria, VA 22314

Telephone inquiries concerning this matter may be directed to the undersigned at (571)272-3231.

D Wood

Douglas I. Wood
Senior Petitions Attorney
Office of Petitions

[1] 37 CFR 1.181(f).

UNITED STATES PATENT AND TRADEMARK OFFICE

Commissioner for Patents
United States Patent and Trademark Office
P.O. Box 1450
Alexandria, VA 22313-1450
www.uspto.gov
DRW Mar-06

IBM CORP (YA)
C/O YEE & ASSOCIATES PC
P.O. BOX 802333
DALLAS TX 75380

COPY MAILED
MAR 27 2006
OFFICE OF PETITIONS

In re Application of	:	
Rodriguez et al.	:	DECISION ON PETITION TO
Application No. 09/561,183	:	WITHDRAW HOLDING OF
Filed: 27 April, 2000	:	ABANDONMENT
Atty Docket No. AUS000175US1	:	

This is a decision on the renewed petition filed on 6 March, 2006, to withdraw the holding of abandonment in the above-identified application.

The petition is **GRANTED**.

The application was held abandoned for failure to timely respond to the non-final Office action mailed on 30 March, 2004. Notice of Abandonment was mailed on 31 January, 2005. A paper entitled "Response to Notice of Abandonment" requesting withdrawal of the holding of abandonment was first filed on 28 February, 2005, but was apparently not treated as a petition. The petition filed on 23 January, 2006, was dismissed on 10 February, 2006.

Petitioners again assert that an amendment was timely filed. In support, petitioner has supplied a copy of an amendment, the first page of which contains a Certificate of Facsimile Transmission dated 23 June, 2004.

Any petition to withdraw the holding of abandonment based on a Certificate of Transmission by facsimile must include the following requirements:

(1) A copy of the original response bearing a signed Certificate of Transmission which includes the date of signing; and

(2) A statement under 37 CFR 1.8(b)(3) attesting to the personal knowledge, or to the satisfaction of the Director, of transmitting the ***original*** response on the date indicated on the Certificate of Transmission (*see* 37 CFR 1.8 and MPEP 512). If the correspondence was sent by facsimile transmission, a copy of the sending unit's report confirming transmission may be used to support this statement.

Petitioners state that the individual who signed the certificate of transmission, Amy Miller, no longer is employed by counsel and cannot be located. Petitioners have provided, however, a copy of a mail log as well as a declaration by counsel's legal assistant attesting to the procedure used for sending correspondence to the Office by facsimile. As such, petitioners have demonstrated to the satisfaction of the Director that the respone was timely filed.

As petitioners have provided convincing evidence that a reply to the non-final Office action mailed on 30 March, 2004, was timely filed on 23 June, 2004, the showing of record is that were is no abandonment in fact. Any inconvenience caused to applicant is regretted.

The application is being referred to the Technology Center for further processing.

Telephone inquiries concerning this matter may be directed to the undersigned at (571)272-3231.

D Wood

Douglas I. Wood
Senior Petitions Attorney
Office of Petitions

UNITED STATES PATENT AND TRADEMARK OFFICE

Commissioner for Patents
United States Patent and Trademark Office
P.O. Box 1450
Alexandria, VA 22313-1450
www.uspto.gov

In re Patent No. 6315898
Issue Date: November 13,2001
Application No. 09561203
Filed: April 27,2000
Attorney Docket No. 13089

:
:DECISION GRANTING PETITION
:UNDER 37 CFR 1.378(c)
:

This is a decision on the electronic petition, filed February 18,2010 ,under 37 CFR 1.378(c) to accept the unintentionally delayed payment of the 7.5 year maintenance fee for the above-identified patent.

The petition is **GRANTED**.

The maintenance fee is accepted, and the above-identified patent reinstated as of February 18,2010 . This decision also constitutes notice that the fee has been accepted. An electronic copy of the petition and this decision has been created as an entry in the Image File Wrapper. Nevertheless, petitioner should print and retain an independent copy.

Telephone inquiries related to this electronic decision should be directed to the Electronic Business Center at 1-866-217-9197.

PTO/SB/66 (03-09)
Approved for use through 03/31/2012. OMB 0651-0016
U.S. Patent and Trademark Office: U.S. DEPARTMENT OF COMMERCE
Under the Paperwork Reduction Act of 1995, no persons are required to respond to a collection of information unless it displays valid OMB control number.

PETITION TO ACCEPT UNINTENTIONALLY DELAYED PAYMENT OF MAINTENANCE FEE IN AN EXPIRED PATENT (37 CFR 1.378(c))

Patent Number	Issue Date (YYYY-MM-DD)	Application Number	Filing Date (YYYY-MM-DD)	Docket Number (if applicable)
6,315,898	2001-11-13	09/561,203	2000-04-27	13507.0035.000000

CAUTION: Maintenance fee (and surcharge, if any) payment must correctly identify: (1) the patent number and (2) the application number of the actual U.S. application leading to issuance of that patent to ensure the fee(s) is/are associated with the correct patent. 37 CFR 1.366(c) and (d).

SMALL ENTITY

☐ Patentee claims, or has previously claimed, small entity status. See 37 CFR 1.27.

LOSS OF ENTITLEMENT TO SMALL ENTITY STATUS

☐ Patentee is no longer entitled to small entity status. See 37 CFR 1.27(g)

NOT Small Entity		Small Entity	
Fee	Code	Fee	Code
○ 3 ½ year	(1551)	○ 3 ½ year	(2551)
◉ 7 ½ year	(1552)	○ 7 ½ year	(2552)
○ 11 ½ year	(1553)	○ 11 ½ year	(2553)

SURCHARGE

The surcharge required by 37 CFR 1.20(i)(2) (Fee Code 1558) must be paid as a condition of accepting unintentionally delayed payment of the maintenance fee.

MAINTENANCE FEE (37 CFR 1.20(e)-(g))

The appropriate maintenance fee must be submitted with this petition.

STATEMENT

THE UNDERSIGNED CERTIFIES THAT THE DELAY IN PAYMENT OF THE MAINTENANCE FEE TO THIS PATENT WAS UNINTENTIONAL

PETITIONER(S) REQUEST THAT THE DELAYED PAYMENT OF THE MAINTENANCE FEE BE ACCEPTED AND THE PATENT REINSTATED

THIS PORTION MUST BE COMPLETED BY THE SIGNATORY OR SIGNATORIES

37 CFR 1.378(d) states: "Any petition under this section must be signed by an attorney or agent registered to practice before the Patent and Trademark Office, or by the patentee, the assignee, or other party in interest."

I certify, in accordance with 37 CFR 1.4(d)(4) that I am

◉ An attorney or agent registered to practice before the Patent and Trademark Office

○ A sole patentee

○ A joint patentee; I certify that I am authorized to sign this submission on behalf of all the other patentees.

○ A joint patentee; all of whom are signing this e-petition

○ The assignee of record of the entire interest

Patent Practitioner			
A signature of the applicant or representative is required in accordance with 37 CFR 1.33 and 10.18. Please see 37 CFR 1.4(d) for the form of the signature			
Signature	/jade o laye/	Date (YYYY-MM-DD)	2010-02-18
Name	Jade O. Laye	Registration Number	54255

This collection of information is required by 37 CFR 1.378(c). The information is required to obtain or retain a benefit by the public which is to file (and by the USPTO to process) an application. Confidentiality is governed by 35 U.S.C. 122 and 37 CFR 1.11 and 1.14. This collection is estimated to take 1 hour to complete, including gathering, preparing, and submitting the completed application form to the USPTO. Time will vary depending upon the individual case. Any comments on the amount of time you require to complete this form and/ or suggestions for reducing this burden, should be sent to the Chief Information Officer, U.S. Patent and Trademark Office, U.S. Department of Commerce, P.O. Box 1450, Alexandria, VA 22313-1450. DO NOT SEND FEES OR COMPLETED FORMS TO THIS ADDRESS. **This form can only be used when in conjunction with EFS-Web. If this form is mailed to the USPTO, it may cause delays in reinstating the patent.**

Privacy Act Statement

The Privacy Act of 1974 (P.L. 93-579) requires that you be given certain information in connection with your submission of the attached form related to a patent application or patent. Accordingly, pursuant to the requirements of the Act, please be advised that: (1) the general authority for the collection of this information is 35 U.S.C. 2(b)(2); (2) furnishing of the information solicited is voluntary; and (3) the principal purpose for which the information is used by the U.S. Patent and Trademark Office is to process and/or examine your submission related to a patent application or patent. If you do not furnish the requested information, the U.S. Patent and Trademark Office may not be able to process and/or examine your submission, which may result in termination of proceedings or abandonment of the application or expiration of the patent.

The information provided by you in this form will be subject to the following routine uses:

1. The information on this form will be treated confidentially to the extent allowed under the Freedom of Information Act (5 U.S.C. 552) and the Privacy Act (5 U.S.C. 552a). Records from this system of records may be disclosed to the Department of Justice to determine whether the Freedom of Information Act requires disclosure of these records.

2. A record from this system of records may be disclosed, as a routine use, in the course of presenting evidence to a court, magistrate, or administrative tribunal, including disclosures to opposing counsel in the course of settlement negotiations.

3. A record in this system of records may be disclosed, as a routine use, to a Member of Congress submitting a request involving an individual, to whom the record pertains, when the individual has requested assistance from the Member with respect to the subject matter of the record.

4. A record in this system of records may be disclosed, as a routine use, to a contractor of the Agency having need for the information in order to perform a contract. Recipients of information shall be required to comply with the requirements of the Privacy Act of 1974, as amended, pursuant to 5 U.S.C. 552a(m).

5. A record related to an International Application filed under the Patent Cooperation Treaty in this system of records may be disclosed, as a routine use, to the International Bureau of the World Intellectual Property Organization, pursuant to the Patent Cooperation Treaty.

6. A record in this system of records may be disclosed, as a routine use, to another federal agency for purposes of National Security review (35 U.S.C. 181) and for review pursuant to the Atomic Energy Act (42 U.S.C. 218(c)).

7. A record from this system of records may be disclosed, as a routine use, to the Administrator, General Services, or his/her designee, during an inspection of records conducted by GSA as part of that agency's responsibility to recommend improvements in records management practices and programs, under authority of 44 U.S.C. 2904 and 2906. Such disclosure shall be made in accordance with the GSA regulations governing inspection of records for this purpose, and any other relevant (i.e., GSA or Commerce) directive. Such disclosure shall not be used to make determinations about individuals.

8. A record from this system of records may be disclosed, as a routine use, to the public after either publication of the application pursuant to 35 U.S.C. 122(b) or issuance of a patent pursuant to 35 U.S.C. 151. Further, a record may be disclosed, subject to the limitations of 37 CFR 1.14, as a routine use, to the public if the record was filed in an application which became abandoned or in which the proceedings were terminated and which application is referenced by either a published application, an application open to public inspections or an issued patent.

9. A record from this system of records may be disclosed, as a routine use, to a Federal, State, or local law enforcement agency, if the USPTO becomes aware of a violation or potential violation of law or regulation.

UNITED STATES PATENT AND TRADEMARK OFFICE

Commissioner for Patents
United States Patent and Trademark Office
P.O. Box 1450
Alexandria, VA 22313-1450
www.uspto.gov

ARNOLD & PORTER LLP
555 TWELFTH ST, N.W.
WASHINGTON DC 20004

COPY MAILED
NOV 17 2004
OFFICE OF PETITIONS

In re Application of :
Kathryn S. Prickett et al :
Application No. 09/561,226 :
Filed: April 28, 2000 :
Attorney Docket No. 030639.0028.UTL :

ON PETITION

This is a decision on the petition, filed November 16, 2004, under 37 CFR 1.313(c)(2) to withdraw the above-identified application from issue after payment of the issue fee.

The petition is **GRANTED**.

The above-identified application is withdrawn from issue for consideration of a submission under 37 CFR 1.114 (request for continued examination). See 37 CFR 1.313(c)(2).

Petitioner is advised that the issue fee paid on September 30, 2004 in the above-identified application cannot be refunded. If, however, the above-identified application is again allowed, petitioner may request that it be applied towards the issue fee required by the new Notice of Allowance.[1]

Telephone inquiries should be directed to the undersigned at (571) 272-3208.

The examiner of Technology Center AU 1653 will consider the request for continued examination under 37 CFR 1.114.

Karen Creasy

Karen Creasy
Petitions Examiner
Office of Petitions
Office of the Deputy Commissioner
for Patent Examination Policy

---

[1] The request to apply the issue fee to the new Notice may be satisfied by completing and returning the new Issue Fee Transmittal Form PTOL-85(b), which includes the following language thereon: "Commissioner for Patents is requested to apply the Issue Fee and Publication Fee (if any) or re-apply any previously paid issue fee to the application identified above." Petitioner is advised that, whether a fee is indicated as being due or not, the Issue Fee Transmittal Form **must** be completed and timely submitted to avoid abandonment. Note the language in bold text on the first page of the Notice of Allowance and Fee(s) Due (PTOL-85).

SPE RESPONSE FOR CERTIFICATE OF CORRECTION

Paper No.: _____

DATE : 09/30/2005

TO SPE OF : ART UNIT **1653**

SUBJECT : Request for Certificate of Correction on Patent No.: 09/561226 6924264

A response is requested with respect to the accompanying request for a certificate of correction.

Please complete this form and return with file, within **7** days to:
Palm location **7580, Certificates of Correction Branch – South Tower – 9A22**
If response is for an IFW, **return to employee (named below) via PUBSCofC Team in MADRAS.**
With respect to the change(s) requested, correcting Office and/or Applicant's errors, should the patent read as shown in the certificate of correction (COCIN)? No new matter should be introduced, nor should the scope or meaning of the claims be changed.

Thank You For Your Assistance

Angela Green
Certificates of Correction Branch
Tel. No. 703-305-9380 ext. 123

The request for issuing the above-identified correction(s) is hereby:
Note your decision on the appropriate box.

- [x] **Approved** — All changes apply.
- [ ] **Approved in Part** — Specify below which changes **do not** apply.
- [ ] **Denied** — State the reasons for denial below.

Comments:

_____

_____

_____

_____

_____

SPE **Art Unit** 1653

UNITED STATES PATENT AND TRADEMARK OFFICE

COMMISSIONER FOR PATENTS
UNITED STATES PATENT AND TRADEMARK OFFICE
P.O. BOX 1450
ALEXANDRIA, VA 22313-1450
www.uspto.gov

FISH & RICHARDSON PC
P.O. BOX 1022
MINNEAPOLIS MN 55440-1022

COPY MAILED
APR 06 2006
OFFICE OF PETITIONS

In re Application of	:
Tamatani et al.	:
Application No. 09/561,308	: Corrected Letter Regarding
Filing Date: April 28, 2000	: Patent Term Extension
Docket No. 14539-004002	:
For: JTT-1 PROTEIN AND METHODS OF INHIBITING LYMPHOCYTE ACTIVATION	:

The above-identified application has been forwarded to the undersigned for correction of the patent term extension information printed on the Notice of Allowance and Issue Fee due that was mailed on October 20, 2005, which incorrectly states the patent term is extended by 846 days. See 35 U.S.C. §§ 154(a)(2) and (b)(1)[1] and 37 C.F.R. § 1.701(a).

The petition is granted.

Petitioner notes the above-identified application was suspended by the Office on August 26, 2002, for a potential interference and 37 CFR 1.701(c)(1)(ii) does not award patent term extension for a potential interference, thus the 295 days awarded due to that suspension are improper.

The patent statute only permits extension of patent term based on very specific criteria. The Office has no authority to grant any extension or adjustment of the term due to administrative delays except as authorized by 35 U.S.C. § 154. 35 U.S.C. § 154 provides for patent term extension for appellate review, interference and secrecy order delays in utility and plant applications filed on or after June 8, 1995, and, as amended by the "American Inventors Protection Act of 1999," enacted November 29, 1999, as part of Public Law 106-113, for other specifically defined administrative delays in utility and plant applications filed on or after May 29, 2000.

[1] 35 U.S.C. § 154 was amended by the "American Inventors Protection Act of 1999," which was enacted on November 29, 1999 as part of Public Law 106-113 (Consolidated Appropriations Act for Fiscal Year 2000). Since this amendment is effective May 29, 2000 and applies to applications filed on or after that date, the prior patent term adjustment provisions of 35 U.S.C. § 154 continue to apply to the above-identified application.

The Notice of Allowance and Issue Fee Due mailed on October 20, 2005, incorrectly indicated that the patent to issue from the application 09/582,760 is eligible for a 846-day extension, where a 551-day extension is due.

The patent, if issued, will include an indication that the patent term is extended by **551 days**.

Petitioner's deposit account has not been charged a petition fee.

Telephone inquiries with regard to this communication should be directed to Mark O. Polutta at (571) 272-7709.

Mark O. Polutta
Senior Legal Advisor
Office of Patent Legal Administration
Office of the Deputy Commissioner
for Patent Examination Policy

UNITED STATES PATENT AND TRADEMARK OFFICE

COMMISSIONER FOR PATENTS
UNITED STATES PATENT AND TRADEMARK OFFICE
WASHINGTON, D.C. 20231
www.uspto.gov

Paper No. 7

Jeffrey A. Pyle
Williams, Morgan & Amerson, P.C.
7676 Hillmont, Suite 250
Houston, Texas 77040

MAIL

OCT 0 5 2001

DIRECTOR OFFICE
TECHNOLOGY CENTER 2100

In re Application of: James Smart et al.	)	
Application No. 09/561,444	)	
Filed: April 28, 2000	)	**DECISION ON REQUEST FOR**
For: SOFTWARE MECHANISM FOR	)	**WITHDRAWAL AS ATTORNEY**
UNIQUE IDENTIFICATION OF A	)	
SCSI DEVICE	)	

This is a decision on the Request To Withdraw from Representation filed September 24, 2001.

A grantable request to withdraw as attorney of record should indicate thereon the present mailing addresses of the attorney(s) who is/are withdrawing from the record and of the applicant. The request for withdrawal must be signed by every attorney seeking to withdraw or contain a clear indication that one attorney is signing on behalf of another/others. A request to withdraw will not be approved unless at least 30 (thirty) days would remain between the date of approval and the later of the expiration date of a time to file a response or the expiration date of the maximum time period which can be extended under 37 C.F.R. § 1. 136(a). The effective date of withdrawal being the date of decision and not the date of request. See M.P.E.P. § 402.06. 37 C.F.R. § 1.36 further requires that the applicant or patent owner be notified of the withdrawal of the attorney or agent.

The request is deficient because there is no statement that Mr. Pyle is ***authorized*** to sign on behalf of the other attorneys. Therefore, the request is **DENIED**.

Note that there is no request to withdraw Barbara Kitchell (33,928) or Carolanne King (44,914) from representation.

All future communications from the Office will continue to be directed to the above-listed address until otherwise notified by applicant. Applicant is reminded of the obligation to promptly notify the Office of any change in correspondence address to ensure receipt of all communications from the Office.

Pinchus M. Laufer

Pinchus M. Laufer
Special Programs Examiner
Technology Center 2100
Computer Architecture, Software, and Electronic Commerce
(703) 306-4160

#11
3/28/02

UNITED STATES PATENT AND TRADEMARK OFFICE

Commissioner for Patents
United States Patent and Trademark Office
Washington, D.C. 20231
www.uspto.gov

MAR 21 2002

Paper No. 11

Jeffrey A. Pyle
WILLIAMS, MORGAN & AMERSON, P.C.
7676 Hillmont, Suite 250
Houston, Texas 77040

In re Application of: James COUGHLAN et al Application No.: 09/561,444 Filed: April 28, 2000 For: SOFTWARE MECHANISM FOR UNIQUE IDENTIFICATION OF SCSI DEVICES	)	**DECISION ON REQUEST FOR WITHDRAWAL AS ATTORNEY**

This is a decision on the Request For Withdrawal As Attorney Under 37 CFR § 1. 36 and 10.40(c) filed February 05, 2002.

A Power Of Attorney Under 37 CFR § 1. 36 was filed on January 30, 2002. The Power Of Attorney revoked all prior Powers Of Attorney and appointed Jonathan M. Harris of CONLEY ROSE & TAYON as the attorneys of record of the instant application. The Power Of Attorney of January 30, 2002 was accepted. Accordingly, all communications from the U.S. Patent and Trademark Office to applicant are to be conducted by Jonathan M. Harris.

For the above stated reasons, the request is DISMISSED AS MOOT.

No further communication to you regarding this application will be made.

Vincent N. Trans
Special Program Examiner
Technology Center 2100
Computer Architecture, Software,
and Electronic Commerce
(703) 305-9750

cc: Jonathan M. Harris
CONLEY ROSE & TAYON
P.O. Box 3267
Houston, TX 77253-3267

UNITED STATES DEPARTMENT OF COMMERCE
Patent and Trademark Office
ASSISTANT SECRETARY AND COMMISSIONER
OF PATENTS AND TRADEMARKS
Washington, D.C. 20231

MAILED
MAR - 5 2001
Office of Director
Technology Center 1600

#7

THOMAS J KOWALSKI ESQ
C/O FROMMER LAWRENCE & HAUG LLP
745 FIFTH AVENUE
NEW YORK , NY 10151

In re Application of	:
Michael J. Reed et al	:
Serial No.: 09/561,453	: PETITION TO MAKE SPECIAL
Filed: April 28, 2000	:
Attorney Docket No.: 674519-2012.1	:

This is in response to applicants' petition filed April 28, 2000, to make the above-identified application special under the provisions of 37 CFR 1.102(d). The delay in acting on this petitoin is regretted.

Applicant has satisfied the provisions set forth in M.P.E.P. 708.02, X. Therefor the petition is **GRANTED**.

The application will be forwarded to the examiner for further consideration.

The petiton fee of $130.00 has been charged to applicants' Deposit Account No. 50-0320, as directed.

Should there be any questions with regard to this letter please contact William R. Dixon, Jr. by letter addressed to the Director, Technology Center 1600, Washington, DC 20231, or by telephone at (703) 308-3824 or by facsimile transmission at (703) 305-7230.

William R. Dixon, Jr.
Special Program Examiner
Technology Center 1600

SPE RESPONSE FOR CERTIFICATE OF CORRECTION

Paper No.: _____

DATE : 11/11/06

TO SPE OF : ART UNIT 1649

SUBJECT : Request for Certificate of Correction on Patent No.: 7090987

A response is requested with respect to the accompanying request for a certificate of correction.

Please complete this form and return with file, within 7 days to:
Palm location **7580, Certificates of Correction Branch – South Tower – 9A22**
If response is for an IFW, **return to employee (named below) via PUBSCofC Team in MADRAS.**
With respect to the change(s) requested, correcting Office and/or Applicant's errors, should the patent read as shown in the certificate of correction (COCIN)? No new matter should be introduced, nor should the scope or meaning of the claims be changed.

Valerie Jackson

Thank You For Your Assistance

Certificates of Correction Branch
Tel. No. 703-308-9390 ext. 114

The request for issuing the above-identified correction(s) is hereby:
Note your decision on the appropriate box.

- ☒ **Approved** — All changes apply.
- ☐ **Approved in Part** — Specify below which changes **do not** apply.
- ☐ **Denied** — State the reasons for denial below.

Comments:

JANET L. ANDRES
SUPERVISORY PATENT EXAMINER

SPE

1649
Art Unit

UNITED STATES PATENT AND TRADEMARK OFFICE

Commissioner for Patents
United States Patent and Trademark Office
P.O. Box 1450
Alexandria, VA 22313-1450
www.uspto.gov

LERNER AND GREENBERG, PA
P O BOX 2480
HOLLYWOOD FL 33022-2480

COPY MAILED

AUG 2 6 2005

OFFICE OF PETITIONS

In re Application of	:	
Ritter Gerhard	:	
Application No. 09/561,594	:	ON PETITION
Patent Number: 6,865,175	:	
Filed: April 27, 2000	:	
Issued: March 8, 2005	:	
Attorney Docket No.: GR 97 P 2821		

This is a decision on the petition under 37 CFR 1.55(a), filed February 14, 2005 for entry of priority papers submitted after the date the issue fee was paid.

The petition is **GRANTED**.

Receipt is acknowledged of papers submitted under 35 U.S.C. 119.

The priority papers are accepted as timely filed and have been placed of record in the file.

It is noted that the claim for priority appears on the first page of the Patent. Accordingly, no request for a certificate of correction under 35 U.S.C. 255 and 37 CFR 1.323 is necessary.

Telephone inquiries related to this decision may be directed to Charlema R. Grant at (571) 272-3215.

Frances Hicks
Petitions Examiner
Office of Petitions

UNITED STATES PATENT AND TRADEMARK OFFICE

Commissioner for Patents
United States Patent and Trademark Office
P.O. Box 1450
Alexandria, VA 22313-1450
www.uspto.gov

LAHIVE & COCKFIELD, LLP.
28 STATE STREET
BOSTON, MA 02109

COPY MAILED
MAY 0 5 2004
OFFICE OF PETITIONS

In re Application of :
Wihelm Ardes :
Application No. 09/561,787 : ON PETITIONS
Filed: April 28, 2000 :
Attorney Docket No. HHI-010CPARE

This is a decision on the petition entitled "Petition for Correction of Filing Date," filed August 22, 2000, which requests a filing date of April 28, 2000, rather than April 29, 2000. Additionally, this is a decision on the petition entitled "Petition for Correction of Filing Receipt," filed June 8, 2001 requesting correction of the claim for benefit of a prior application.

The petition for a corrected filing date is dismissed as moot for the reason stated below.

The petition for correction of a Filing Receipt is granted to the extent indicated below.

As to the petition for a corrected Filing Date of April 28, 2000, it is noted that, although there is no indication that the Express Mail mailing label and copy of stamped return post card accompanied the instant petition as indicated, the filing date of this application was corrected on January 18, 2002 to reflect the desired filing date of April 28, 2000 by the Office of Initial Patent Examination. Therefore, the petition is dismissed as involving a moot issue.

Petitioner requests a corrected Filing Receipt which sets forth the claim for benefit of Application No. 08/617,472, issued June 23, 1998, as U.S. Patent 5,770,054. However, it would be improper to state that the instant reissue application claims benefit of Application No. 08/617,472 since the instant reissue application can be neither a continuing application of nor copending with the application of which this application is a reissue. However, it would be appropriate to state that "[t]his application is a reissue of Application No. 08/617,472, filed March 15, 1996, now U.S. Patent 5,770,054." Accordingly, a corrected Filing Receipt which sets forth this information accompanies this decision on petition.

Any inquiries concerning this decision may be directed to Karen Creasy at (703) 305-8859.

Brian Hearn
Senior Petitions Examiner
Office of Petitions
Office of the Deputy Commissioner
for Patent Examination Policy

ATTACHMENT: Corrected Filing Receipt

UNITED STATES PATENT AND TRADEMARK OFFICE

COMMISSIONER FOR PATENTS
UNITED STATES PATENT AND TRADEMARK OFFICE
WASHINGTON, D.C. 20231
www.uspto.gov

Paper No. 4

COPY MAILED

NOV 09 2000

OFFICE OF PETITIONS
A/C PATENTS

LAHIVE & COCKFIELD
28 STATE STREET
BOSTON, MA 02109

In re Application of
Jacobs, et al.
Application No. 09/561,811
Filed: April 28, 200

ON PETITION

This is in response to the petition under 37 CFR 1.10(c), filed July 24, 2000, requesting that the above-identified application be accorded a filing date of April 28, 2000 instead of April 29, 2000.

Petitioner alleges that the application was deposited in Express Mail service April 28, 2000. In support, petitioner provided a copy of an "Express Mail Post Office to Addressee" mailing label bearing tracking number EL373304876US (the same Express Mail number found on the itemized certificate of mailing accompanying the original application papers located in the official file) and a "date-in" of April 28, 2000. In addition, a search of the USPS Express Mail Information Database indicates that a package bearing Express Mail label No. EL373304876US was accepted by the USPS on April 28, 2000 at 8:21 PM and delivered to the United States Patent and Trademark Office on May 1, 2000 at 11:00 AM.

In view of the above, the petition is **GRANTED**.

This application is being forwarded to the Official of Initial Patent Examination for correction of the filing date to April 28, 2000.

Telephone inquiries related to this decision may be directed to Petitions Attorney Alesia M. Brown at (703) 305-0310.

Beverly M. Flanagan
Supervisory Petitions Examiner
Office of Petitions
Office of the Deputy Commissioner
for Patent Examination Policy

UNITED STATES PATENT AND TRADEMARK OFFICE

Commissioner for Patents
United States Patent and Trademark Office
P.O. Box 1450
Alexandria, VA 22313-1450
www.uspto.gov

WYETH/FINNEGAN HENDERSON, LLP
901 NEW YORK AVENUE, NW
WASHINGTON DC 20001-4413

COPY MAILED

NOV 08 2007

OFFICE OF PETITIONS

In re Application of	:
Jacobs et al.	:
Application No. 09/561,811	: Decision on Petition for
Filing Date: April 28, 2000	: Patent Term Extension
For: HUMAN GIL-19/AE289	:
POLYNUCLEOTIDES	:

The above-identified application has been forwarded to the undersigned for consideration on the "Petition Under 37 CFR 1.181," which was received on April 18, 2007 requesting a patent term extension of 219-days. See 35 U.S.C. § 154(b)[1] and 37 C.F.R. § 1.701.

The petition is granted.

Petitioner notes that the Notice of Allowance dated March 13, 2007, in the above-identified application incorrectly stated that the patent term extension was 274-days. Petitioner contends that an interference was declared on January 18, 2006, and the Board of Patent Appeals and Interferences (BPAI) terminated the interference on August 24, 2006.

After mailing of this decision, the above-identified application will be forwarded to Office of Publications for further processing. The patent, if issued, will include an indication that the patent term is extended by **219 days**.

Petitioner's deposit account has not been charged a petition fee.

Inquiries with regard to this communication should be directed to Mark O. Polutta at (571) 272-7709.

Mark O. Polutta
Senior Legal Advisor
Office of Patent Legal Administration
Office of the Deputy Commissioner
for Patent Examination Policy

[1] 35 U.S.C. § 154 was amended by the "American Inventors Protection Act of 1999," which was enacted on November 29, 1999 as part of Public Law 106-113 (Consolidated Appropriations Act for Fiscal Year 2000). Since this amendment is effective May 29, 2000 and applies to applications filed on or after that date, the prior patent term adjustment provisions of 35 U.S.C. § 154 continue to apply to the above-identified application.

UNITED STATES PATENT AND TRADEMARK OFFICE

Commissioner for Patents
United States Patent and Trademark Office
P.O. Box 1450
Alexandria, VA 22313-1450
www.uspto.gov
DIW 12-04

HEWLETT PACKARD COMPANY
P O BOX 272400, 3404 E. HARMONY ROAD
INTELLECTUAL PROPERTY ADMINISTRATION
FORT COLLINS CO 80527-2400

COPY MAILED

DEC 1 3 2004

OFFICE OF PETITIONS

In re Application of	:	
Everett et al.	:	
Application No. 09/561,813	:	ON PETITION
Filed: 29 April, 2000	:	
Attorney Docket No. 10001619-1	:	

This is a decision on the petition under 37 CFR 1.137(b),[1] filed on 28 October, 2004, to revive the above-identified application.

The petition is **GRANTED**.

This application became abandoned on 7 May, 2004, for failure to file a proper response to the final Office action mailed on 6 February, 2004, which set a three (3) month shortened statutory period for reply. No extensions of the time for reply in

---

[1]Effective December 1, 1997, the provisions of 37 CFR 1.137(b) now provide that where the delay in reply was unintentional, a petition may be filed to revive an abandoned application or a lapsed patent pursuant to 37 CFR 1.137(b). A grantable petition filed under the provisions of 37 CFR 1.137(b) must be accompanied by:

(1) the required reply, unless previously filed. In a nonprovisional application abandoned for failure to prosecute, the required reply may be met by the filing of a continuing application. In a nonprovisional application filed on or after June 8, 1995, and abandoned for failure to prosecute, the required reply may also be met by the filing of a request for continued examination in compliance with § 1.114. In an application or patent, abandoned or lapsed for failure to pay the issue fee or any portion thereof, the required reply must be the payment of the issue fee or any outstanding balance thereof. In an application abandoned for failure to pay the publication fee, the required reply must include payment of the publication fee.

(2) the petition fee as set forth in 37 CFR 1.17(m);

(3) a statement that the entire delay in filing the required reply from the due date for the reply until the filing of a grantable petition pursuant to 37 CFR 1.137(b) was unintentional. The Commissioner may required additional information where there is a question whether the delay was unintentional; and

(4) any terminal disclaimer (and fee as set forth in 37 CFR 1.20(d)) required pursuant to 37 CFR 1.137(c)).

accordance with 37 CFR 1.136(a) were obtained. An amendment after final rejection was filed on 24 March, 2004. However, the examiner determined that the amendment did not *prima facie* place the case in condition for allowance, and an Advisory Action was mailed on 30 September, 2004. Notice of Abandonment was mailed on 29 October, 2004.

Petitioner has filed a Notice of Appeal as the required reply.

The Notice of Appeal filed 28 October, 2004, has been entered and made of record. Accordingly, the two (2)-month period for filing the Appeal Brief, in triplicate, accompanied by the fee required by law, runs from the date of this decision.

The application will be referred to Technology Center Art Unit 2133 for further processing.

Telephone inquiries concerning this matter may be directed to the undersigned at (571)272-3231.

D Wood

Douglas I. Wood
Senior Petitions Attorney
Office of Petitions

UNITED STATES PATENT AND TRADEMARK OFFICE

UNITED STATES DEPARTMENT OF COMMERCE
United States Patent and Trademark Office
Address: COMMISSIONER OF PATENTS AND TRADEMARKS
Washington, D.C. 20231
www.uspto.gov

APPLICATION NO.	FILING DATE	FIRST NAMED INVENTOR	ATTORNEY DOCKET NO.	CONFIRMATION NO.
09/561,826	04/28/2000	Roy Lee Kessinger JR.	10227/004	5808

27879 7590 09/27/2002

BRINKS HOFER GILSON & LIONE
ONE INDIANA SQUARE, SUITE 2425
INDIANAPOLIS, IN 46204

EXAMINER
TAMAI, KARL I

ART UNIT	PAPER NUMBER
2834	

DATE MAILED: 09/27/2002

Please find below and/or attached an Office communication concerning this application or proceeding.

The request for deferral/suspension of action under 37 CFR 1.103 has been approved.

Under the Paperwork Reduction Act of 1995, no persons are required to respond to a collection of information unless it displays valid OMB control number.

PETITION TO ACCEPT UNINTENTIONALLY DELAYED PAYMENT OF MAINTENANCE FEE IN AN EXPIRED PATENT (37 CFR 1.378(c))

Patent Number	Issue Date (YYYY-MM-DD)	Application Number	Filing Date (YYYY-MM-DD)	Docket Number (if applicable)
6562013	2003-05-13	09561978	2000-05-02	Marasco-3

CAUTION: Maintenance fee (and surcharge, if any) payment must correctly identify: (1) the patent number and (2) the application number of the actual U.S. application leading to issuance of that patent to ensure the fee(s) is/are associated with the correct patent. 37 CFR 1.366(c) and (d).

SMALL ENTITY
☒ Patentee claims, or has previously claimed, small entity status. See 37 CFR 1.27.

LOSS OF ENTITLEMENT TO SMALL ENTITY STATUS
☐ Patentee is no longer entitled to small entity status. See 37 CFR 1.27(g)

NOT Small Entity			Small Entity		
	Fee	Code		Fee	Code
○	3 ½ year	(1551)	◉	3 ½ year	(2551)
○	7 ½ year	(1552)	○	7 ½ year	(2552)
○	11 ½ year	(1553)	○	11 ½ year	(2553)

SURCHARGE
The surcharge required by 37 CFR 1.20(i)(2) (Fee Code 1558) must be paid as a condition of accepting unintentionally delayed payment of the maintenance fee.

MAINTENANCE FEE (37 CFR 1.20(e)-(g))
The appropriate maintenance fee must be submitted with this petition.

STATEMENT
THE UNDERSIGNED CERTIFIES THAT THE DELAY IN PAYMENT OF THE MAINTENANCE FEE TO THIS PATENT WAS UNINTENTIONAL

PETITIONER(S) REQUEST THAT THE DELAYED PAYMENT OF THE MAINTENANCE FEE BE ACCEPTED AND THE PATENT REINSTATED

THIS PORTION MUST BE COMPLETED BY THE SIGNATORY OR SIGNATORIES

37 CFR 1.378(d) states: "Any petition under this section must be signed by an attorney or agent registered to practice before the Patent and Trademark Office, or by the patentee, the assignee, or other party in interest."

I certify, in accordance with 37 CFR 1.4(d)(4) that I am

◉ An attorney or agent registered to practice before the Patent and Trademark Office

○ A sole patentee

○ A joint patentee; I certify that I am authorized to sign this submission on behalf of all the other patentees.

○ A joint patentee; all of whom are signing this e-petition

○ The assignee of record of the entire interest

Patent Practitioner			
A signature of the applicant or representative is required in accordance with 37 CFR 1.33 and 10.18. Please see 37 CFR 1.4(d) for the form of the signature			
Signature	/Donald N. Halgren/	Date (YYYY-MM-DD)	2007-12-12
Name	Donald N. Halgren	Registration Number	27056

This collection of information is required by 37 CFR 1.378(c). The information is required to obtain or retain a benefit by the public which is to file (and by the USPTO to process) an application. Confidentiality is governed by 35 U.S.C. 122 and 37 CFR 1.11 and 1.14. This collection is estimated to take 1 hour to complete, including gathering, preparing, and submitting the completed application form to the USPTO. Time will vary depending upon the individual case. Any comments on the amount of time you require to complete this form and/ or suggestions for reducing this burden, should be sent to the Chief Information Officer, U.S. Patent and Trademark Office, U.S. Department of Commerce, P.O. Box 1450, Alexandria, VA 22313-1450. DO NOT SEND FEES OR COMPLETED FORMS TO THIS ADDRESS. **This form can only be used when in conjunction with EFS-Web. If this form is mailed to the USPTO, it may cause delays in reinstating the patent.**

Privacy Act Statement

The Privacy Act of 1974 (P.L. 93-579) requires that you be given certain information in connection with your submission of the attached form related to a patent application or patent. Accordingly, pursuant to the requirements of the Act, please be advised that: (1) the general authority for the collection of this information is 35 U.S.C. 2(b)(2); (2) furnishing of the information solicited is voluntary; and (3) the principal purpose for which the information is used by the U.S. Patent and Trademark Office is to process and/or examine your submission related to a patent application or patent. If you do not furnish the requested information, the U.S. Patent and Trademark Office may not be able to process and/or examine your submission, which may result in termination of proceedings or abandonment of the application or expiration of the patent.

The information provided by you in this form will be subject to the following routine uses:

1. The information on this form will be treated confidentially to the extent allowed under the Freedom of Information Act (5 U.S.C. 552) and the Privacy Act (5 U.S.C. 552a). Records from this system of records may be disclosed to the Department of Justice to determine whether the Freedom of Information Act requires disclosure of these record s.

2. A record from this system of records may be disclosed, as a routine use, in the course of presenting evidence to a court, magistrate, or administrative tribunal, including disclosures to opposing counsel in the course of settlement negotiations.

3. A record in this system of records may be disclosed, as a routine use, to a Member of Congress submitting a request involving an individual, to whom the record pertains, when the individual has requested assistance from the Member with respect to the subject matter of the record.

4. A record in this system of records may be disclosed, as a routine use, to a contractor of the Agency having need for the information in order to perform a contract. Recipients of information shall be required to comply with the requirements of the Privacy Act of 1974, as amended, pursuant to 5 U.S.C. 552a(m).

5. A record related to an International Application filed under the Patent Cooperation Treaty in this system of records may be disclosed, as a routine use, to the International Bureau of the World Intellectual Property Organization, pursuant to the Patent Cooperation Treaty.

6. A record in this system of records may be disclosed, as a routine use, to another federal agency for purposes of National Security review (35 U.S.C. 181) and for review pursuant to the Atomic Energy Act (42 U.S.C. 218(c)).

7. A record from this system of records may be disclosed, as a routine use, to the Administrator, General Services, or his/her designee, during an inspection of records conducted by GSA as part of that agency's responsibility to recommend improvements in records management practices and programs, under authority of 44 U.S.C. 2904 and 2906. Such disclosure shall be made in accordance with the GSA regulations governing inspection of records for this purpose, and any other relevant (i.e., GSA or Commerce) directive. Such disclosure shall not be used to make determinations about individuals.

8. A record from this system of records may be disclosed, as a routine use, to the public after either publication of the application pursuant to 35 U.S.C. 122(b) or issuance of a patent pursuant to 35 U.S.C. 151. Further, a record may be disclosed, subject to the limitations of 37 CFR 1.14, as a routine use, to the public if the record was filed in an application which became abandoned or in which the proceedings were terminated and which application is referenced by either a published application, an application open to public inspections or an issued patent.

9. A record from this system of records may be disclosed, as a routine use, to a Federal, State, or local law enforcement agency, if the USPTO becomes aware of a violation or potential violation of law or regulation.

UNITED STATES PATENT AND TRADEMARK OFFICE

Commissioner for Patents
United States Patent and Trademark Office
P.O. Box 1450
Alexandria, VA 22313-1450
www.uspto.gov

In re Patent No. 6562013
Issue Date: May 13,2003
Application No. 09561978
Filed: May 2,2000
Attorney Docket No. MARASCO-3(KIT)

:
:DECISION GRANTING PETITION
:UNDER 37 CFR 1.378(c)
:

This is a decision on the electronic petition, filed December 12,2007 ,under 37 CFR 1.378(c) to accept the unintentionally delayed payment of the 3.5 year maintenance fee for the above-identified patent.

The petition is GRANTED.

The maintenance fee is accepted, and the above-identified patent reinstated as of December 12,2007. This decision also constitutes notice that the fee has been accepted. An electronic copy of the petition and this decision has been created as an entry in an Image File Wrapper. Nevertheless, petitioner should print and retain an independent copy

Telephone inquires related to this electronic decision should be directed to the Electronic Business Center at 1-866-217-9197.

UNITED STATES PATENT AND TRADEMARK OFFICE

COMMISSIONER FOR PATENTS
UNITED STATES PATENT AND TRADEMARK OFFICE
WASHINGTON, D.C. 20231
www.uspto.gov

Paper No. 13

Attention: Dale A Bjorkman
Office of Intellectual Property Counsel
3M Innovative Properties Company
PO Box 33427
St Paul MN 55133-3427

COPY MAILED

JUL 3 0 2002

OFFICE OF PETITIONS

In re Application of :
Hu et al. :
Application No. 09/562,018 : DECISION ON PETITION
Filed: May 1, 2000 :
Attorney Docket No. 55435USA8.002 :

This is a decision on the petition under 37 CFR 1.10, filed March 28, 2002, requesting that the above-identified application be accorded a filing date of May 1, 2000, rather than the presently accorded filing date of May 2, 2000.

Applicants request the earlier filing date on the basis that the application was purportedly deposited in the United States Postal Service (USPS) Express Mail Service on May 1, 2000, pursuant to the requirements of 37 CFR 1.10. The Express Mail Label No. EL122721807US was placed on the original application papers located in the official file.

In support, the present petition is accompanied by a letter dated June 26, 2000, from Kathy Frahm, Expedited Service Specialist of the USPS. Ms. Frahm certified that a package bearing Express Mail Label No. EL122721807US was picked up in St. Paul, MN on May 1, 2000, and delivered to the Patent Office on May 2, 2000, at 11:00 am. Ms. Frahm stated that due to an oversight by a USPS employee, the Express Mail Label was not completed and returned to applicants. Moreover, the customer copy of the label appears to be lost by the USPS.

In view of the evidence present in the file, it is concluded that the correct date of deposit in Express Mail service is May 1, 2000. Therefore, the application may be accorded a filing date of May 1, 2000.

Accordingly, the petition is **granted**. No petition fee is necessary.

The application is being forwarded to the Office of Initial Patent Examination for **correction of the filing date to May 1, 2000, and the mailing of a corrected filing receipt**.

Telephone inquires specific to this matter may be directed to the undersigned at (703) 306-5589.

Christina Tartera Donnell

Christina Tartera Donnell
Senior Petitions Attorney
Office of Petitions
Office of the Deputy Commissioner
for Patent Examination Policy

UNITED STATES
PATENT AND
TRADEMARK OFFICE

FEB 19 2002

UNDER SECRETARY OF COMMERCE FOR INTELLECTUAL PROPERTY
AND DIRECTOR OF THE UNITED STATES PATENT AND TRADEMARK OFFICE
WASHINGTON, D.C. 20231
WWW.USPTO.GOV

FINNEGAN HENDERSON FARABOW
GARRETT & DUNNER LLP
1300 I STREET NW
WASHINGTON DC 20005

#11

In re Application of
Günther Müller et al
Serial No.: 09/562,022
Filed: May 1, 2000
Attorney Docket No.: 02481.1661

: PETITION DECISION TO RESTART PERIOD FOR REPLY

This is in response to applicant's petition under 37 CFR § 1.181, filed February 8, 2002, requesting restarting of the period for reply.

A review of the file history shows the examiner mailed a non-final Office action to applicants on December 4, 2001, setting a three month shortened statutory period for reply. Applicants state that they did not receive the Office action until February 5, 2002, more than one month after the mail date thereof, and provide copies of the docketing receipt stamped first page of the Office action as evidence thereof. Applicants' statement and evidence are acceptable and the period for reply will be adjusted accordingly.

Applicants' petition is **GRANTED**.

The period for reply to the Office action mailed December 4, 2001, is hereby restarted as of applicants' date of receipt, February 5, 2002. The time period for reply remains as set therein.

Should there be any questions regarding this decision, please contact William R. Dixon, Jr., by mail addressed to Director, Technology Center 1600, Washington, D.C. 20231, or by telephone at (703) 308-3824 or by facsimile transmission at (703) 305-7230.

Bruce M. Kisliuk
Director, Technology Center 1600

UNITED STATES PATENT AND TRADEMARK OFFICE

Commissioner for Patents
United States Patent and Trademark Office
PO Box 1450
Arlington, VA 22313-1450
www.uspto.gov

Paper No. 8

Schwegman Lundberg Woessner & Kluth
PO Box 2938
Minneapolis, MN 55402

COPY MAILED

JUL 2 3 2003

OFFICE OF PETITIONS

In re Application of
Allan R. Robinson
Application No. 09/562,064
Filed: May 1, 2000
Attorney Docket No. 18067701

ON PETITION

This is a decision on the petition under 37 CFR 1.137(b), filed June 24, 2003, to revive the above-identified application.

The petition is GRANTED.

The above-identified application became abandoned for failure to reply in a timely manner in reply to the non-final Office action mailed March 1, 2001, which set a shortened statutory period for reply of three months. No extensions of time under the provisions of 37 CFR 1.136 have been obtained. Accordingly, the application became abandoned on June 2, 2002.

37 CFR 1.137(b)(3) requires a statement that the entire delay in filing the required reply from the due date for the reply until the filing of a grantable petition pursuant to 37 CFR 1.137(b) was unintentional. Since the statement contained in the instant petition varies from the language required by 37 CFR 1.137(b)(3), the statement is being construed as the statement required by 37 CFR 1.137(b)(3) and petitioner must notify the Office if this is not a correct interpretation of the statement.

The file does not indicate a change of address has been submitted, although the address given on the petition differs from the address of record. If appropriate, a change of address should be filed in accordance with MPEP 601.03. A courtesy copy of this decision is being mailed to the address given on the petition; however, the Office will mail all future correspondence solely to the address of record.

Telephone inquiries concerning this decision should be directed to Latrice Bond at (703) 308-6911.

The application file is being forwarded to Technology Center 3753 for further processing.

Latrice Bond

Latrice Bond
Paralegal Specialist
Office of Petitions
Office of the Deputy Commissioner
for Patent Examination Policy

cc: Larry M. Jennings
1925 Taylor Street NE
Minneapolis, MN 55418

UNITED STATES PATENT AND TRADEMARK OFFICE

Commissioner for Patents
United States Patent and Trademark Office
P.O. Box 1450
Alexandria, VA 22313-1450
www.uspto.gov

COPY MAILED
NOV 0 1 2006
OFFICE OF PETITIONS

IPSG, P.C.
P.O. BOX 700640
SAN JOSE CA 95170-0640

In re Application of	:	
Mayank Gupta, et al.	:	
Application No. 09/562,071	:	DECISION ON PETITION
Filed: May 1, 2000	:	TO WITHDRAW
Attorney Docket No. SAND-P007	:	FROM RECORD
	:	

This is a decision on the Request to Withdraw as attorney or agent of record under 37 C.F.R. § 1.36(b) filed August 1, 2006.

The request is **NOT APPROVED**.

A grantable request to withdraw as attorney/agent of record must be signed by every attorney/agent seeking to withdraw or contain a clear indication that one attorney is signing on behalf of another/others. A request to withdraw will not be approved unless at least 30 (thirty) days would remain between the date of approval and the later of the expiration date of a time to file a response or the expiration date of the maximum time period which can be extended under 37 C.F.R. § 1.136(a).

The Office cannot approve the request at this time since the reasons provided do not meet any of the conditions under the mandatory or permissive categories enumerated in 37 CFR 10.40. Section 10.40 of Title 37 of the Code of Federal Regulation states, "[a] practitioner shall not withdraw from employment in a proceeding before the Office without permission from the Office[.]" More specifically, 37 CFR 10.40 states, "[i]f paragraph (b) of this section is not applicable, a practitioner may not request permission to withdraw in matter pending before the Office unless such request or such withdrawal is" for one the permissive reasons listed in 37 CFR 10.40(c). The reasons set forth in the request, "the assignee wishes to terminate representation", do not meet any the conditions set forth in 37 CFR 10.40.

In order to request or take action in a patent matter, the assignee must establish its ownership of the patent to the satisfaction of the Director. In this regard, a Statement under 37 CFR 3.73(b) must have either: (i) documentary evidence of a chain of title from the original owner to the assignee (*e.g.*, copy of an executed assignment), and a statement affirming that the documentary evidence of the chain of title from the original owner to the assignee was or concurrently is being

submitted for recordation pursuant to § 3.11; or (ii) a statement specifying where documentary evidence of a chain of title from the original owner to the assignee is recorded in the assignment records of the Office (*e.g.*, reel and frame number).

All future communications from the Office will continue to be directed to the above-listed address until otherwise notified by applicant.

There is an outstanding Office action mailed July 31, 2006 that requires a reply by the applicant.

Telephone inquiries concerning this decision should be directed to April Wise at 571-272-1642.

April M. Wise
Petitions Examiner
Office of Petitions

cc: RAZA MICROELECTRONTICS, INC.
LEGAL DEPARTMENT
18920 FORGE DRIVE
CUPERTINO, CA 95014-0701

UNITED STATES PATENT AND TRADEMARK OFFICE

Commissioner for Patents
United States Patent and Trademark Office
P.O. Box 1450
Alexandria, VA 22313-1450
www.uspto.gov

STEVENS LAW GROUP
P.O.BOX 1667
SAN JOSE, CA 95109

COPY MAILED

MAY 27 2008

In re Application of	:	
Gupta, et al.	:	
Application No.: 09/562,071	:	ON PETITION
Filed: May 1, 2000	:	
Attorney Docket No: RAZA-04000	:	

This is in response to the petition under 37 CFR 1.137(b) filed July 16, 2007.

Any request for reconsideration of this decision must be submitted within TWO (2) MONTHS from the mail date of this decision. Extensions of time under 37 CFR 1.136(a) are permitted. The reconsideration request should include a cover letter entitled "Renewed Petition" under 37 CFR 1.137(b)."

This application became abandoned for failure to respond in a timely manner to the final Office action mailed July 31, 2006. The notice set a shortened statutory period for reply of three-months from its mailing date. Extensions of time were available pursuant to 37 CFR 1.136(a). No response was received and the application became abandoned on November 1, 2006. A Notice of Abandonment has not yet been mailed.

Effective December 1, 1997, the provisions of 37 CFR 1.137(b) now provide that where the delay in reply was unintentional, a petition may be filed to revive an abandoned application or a lapsed patent pursuant to 37 CFR 1.137(b). A grantable petition pursuant to 37 CFR 1.137(b) must be accompanied by:

(1) the required reply, unless previously filed. In a non-provisional application abandoned for failure to prosecute, the required reply may be met by the filing of a continuing application. In an application or patent, abandoned or lapsed for failure to pay the issue fee, or any portion thereof, the required reply must be the payment of the issue fee or any outstanding balance thereof.

(2) the petition fee as set forth in 37 CFR 1.17(m);

(3) a statement that the entire delay in filing the required reply from the due date for the reply until the filing of a grantable petition pursuant to 37 CFR 1.137(b) was unintentional. The Commissioner may require additional information where there is a question whether the delay was unintentional; and

(4) any terminal disclaimer (and fee set forth in 37 CFR 1.20(d)) required pursuant to 37 CFR 1.137(c).

The instant petition does not satisfy the requirements of item (1) above.

Item (1) above has not been satisfied because of the failure to file a proper reply to the final Office action with the petition. Examiner Eric Chang of Technology Center, Group Art Unit 2116 has determined that the amendment filed July 16, 2007, does not place the application in condition for allowance. The renewed petition must be accompanied by either an amendment that places the application in condition for allowance, a Notice of Appeal and fee, or a Request for Continued Examination and the required fee.

Further correspondence with respect to this matter should be addressed as follows:

By mail:

Mail Stop Petitions
Commissioner for Patents
United States Patent and Trademark Office
Box 1450
Alexandria, VA 22313-1450

By facsimile: (571) 273-8300
Attn: Office of Petitions

Question regarding the sufficiency of the amendment must be directed to Examiner Chang. Telephone inquiries concerning this decision may be directed to the undersigned at (571) 272-3222.

Kenya A. McLaughlin
Petitions Attorney
Office of Petitions

UNITED STATES PATENT AND TRADEMARK OFFICE

Commissioner for Patents
United States Patent and Trademark Office
P.O. Box 1450
Alexandria, VA 22313-1450
www.uspto.gov

ZILKA-KOTAB, PC- RMI
P.O. BOX 721120
SAN JOSE CA 95172-1120

COPY MAILED

JUN 30 2008

In re Application of

Gupta, et al.

Application No. 09/562,071

Filed: May 1, 2000

Attorney Docket No. RAZA-04000

: DECISION ON PETITION

This is a decision on the renewed petition under 37 CFR 1.137(b), filed June 9, 2008, to revive the above-identified application.

The renewed petition is **GRANTED**.

This application became abandoned for failure to file a proper and timely response to the final Office action mailed July 31, 2006, which set a shortened statutory period for reply of three-months from its mailing date. A response was not received within the allowable period and the application became abandoned on November 1, 2006. A petition under 37 CFR 1.137(b) was first filed July 16, 2007, and dismissed by a decision mailed May 27, 2008.

The Request for Continued Examination filed June 9, 2008, is noted.

The above-identified application has been abandoned for an extended period of time. The Patent and Trademark Office is relying on petitioner's duty of candor and good faith and accepting the statement that the entire delay in filing the required reply form the due date for the reply until the filing of a grantable petition pursuant to 37 CFR 1.137(b) was unintentional. See Changes to Patent Practice and Procedure, 62 Fed. Reg. at 53160 and 53178; 1203 Off. Gaz. Pat. Office at 88 and 103 (responses to comments 64 and 109) (applicant obligated under 37 CFR 10.18 to inquire into the underlying facts and circumstances when providing the statement required by 37 CFR 1.137(b) to the Patent and Trademark Office. If, after further investigation, applicant discovers that the delay was other than unintentional, applicant must immediately contact the Office.

The application file is being forwarded to Technology Center 2100, GAU 2116 for further processing.

Telephone inquiries concerning this decision should be directed to the undersigned at (571) 272-3222.

Kenya A. McLaughlin
Petitions Attorney
Office of Petitions

UNITED STATES PATENT AND TRADEMARK OFFICE

Commissioner for Patents
United States Patent and Trademark Office
P.O. Box 1450
Alexandria, VA 22313-1450
www.uspto.gov

Sughrue Mion Zinn Macpeak & Seas PLLC
2100 Pennsylvania Avenue N W
Washington, DC 20037-3202

COPY MAILED

MAR 2 7 2007

OFFICE OF PETITIONS

In re Application of Shin et al. :
Application No. 09/562,077 : Decision on Petition
Filing Date: May 1, 2000 :
Attorney Docket No. Q54402 :

This is a decision on the petition filed December 19, 2006, which is being treated as a petition under 37 CFR 1.183 to waive 37 CFR 1.63(a)(2).

The petition is **granted**.

The declaration filed February 21, 2006, listed one of the inventor's names as "B.S. Manjunath."

37 CFR 1.63(a)(2) requires the oath or declaration to "[i]dentify each inventor by full name, including the family name, and at least one given name without abbreviation together with any other given name or initial."

Petitioner requests Office records be amended to list the full first name of the inventor.

Petitioner has supplied an Application Data Sheet with the inventor's name listed as Bangalore S. Manjunath.

Petitioner has not provided a supplemental oath or declaration. Therefore, petitioner has not complied with the requirements of 37 CFR 1.63(a)(2).

In view of all the facts, including the fact the application is ready for issuance, the Office has determined justice would be served by waiving the requirement for the oath or declaration to identify an inventor by at least one full given name.

The application data sheet is accepted and Office records have been changed to list the inventor's name as Bangalore S. Manjunath.

The petition fee for a petition under 37 CFR 1.183 is $400. Therefore, $400 has been charged to petitioner's deposit account.

The Office of Publications will be informed of the instant decision and the application will be issued as a patent in due course.

Telephone inquiries regarding this communication should be directed to Petitions Attorney Steven Brantley at (571) 272-3203.

Charles Steven Brantley
Senior Petitions Attorney
Office of Petitions

UNITED STATES PATENT AND TRADEMARK OFFICE

UNDER SECRETARY OF COMMERCE FOR INTELLECTUAL PROPERTY AND
DIRECTOR OF THE UNITED STATES PATENT AND TRADEMARK OFFICE
WASHINGTON, DC 20231
www.uspto.gov

APR 22 2003

Schiff Hardin & Waite
Patent Department
7100 Sears Tower
Chicago, IL 60606-6473

Paper No. 13

In re Application of Goran Skog Serial No. : 09/562,118 Filed : May 1, 2000 For : Constant Pressure Generator	: DECISION ON PETITION : TO WITHDRAW : HOLDING OF : ABANDONMENT

This is a decision on petitioner's request filed via facsimile transmission April 2, 2003, to review the holding of abandonment of the instant application for failure to respond to the Office action mailed June 11, 2002 and remailed August 7, 2002. It is noted that no Notice of Abandonment has been mailed in the instant application. Petitioner became aware of the abandoned status of the instant application when called by the examiner on March 31, 2003, to verify if a response to the Office action had been filed. The basis for this request is that applicant did not receive the Office action mailed June 11, 2002 nor the remailed action dated August 7, 2002. Petitioner surmises that the action in question was mailed to an incorrect address in that the Office had not acted on a change of address request filed January 9, 2001. There is no fee required for this petition.

Petitioner has submitted a copy of the change of address request and a copy of a PTO stamped receipt dated January 9, 2001. A review of the file failed to uncover the change of address request filed January 9, 2001. Clearly, the Office action in question was mailed to an incorrect address. Further, in order to overcome the presumption of delivery of an Office action, a practitioner must submit the following: (1) a statement from the practitioner stating that the Office action was not received by practitioner; (2) a statement attesting to the fact that a search of the file jacket and docket record indicates that the Office action was not received; and (3) a copy of the docket record where the non-received Office action would have been entered had it been received and docketed. See 1156 OG 53.The request filed April 2, 2003 includes all the above elements. The request is therefore GRANTED.

Upon the mailing of this decision, the application will be forwarded to the Legal Instruments Examiner to process the change of address and to have the Office action of August 7, 2002 remailed.

Summary: Holding of Abandonment Withdrawn.

John E. Kittle, Director
Groups 3730 and 3760
Phone: (703) 308-0873

ak/04/09/03

UNITED STATES PATENT AND TRADEMARK OFFICE

COMMISSIONER FOR PATENTS
UNITED STATES PATENT AND TRADEMARK OFFICE
WASHINGTON, D.C. 20231
www.uspto.gov

Paper No. 18

TOWNSEND & TOWNSEND & CREW
TWO EMBARCADERO CENTER
8TH FLOOR
SAN FRANCISCO, CA 94111-3834

COPY MAILED

OCT 2 2 2002

OFFICE OF PETITIONS

In re Application of :
William A. McMillan et al :
Application No. 09/562,195 : NOTICE
Filed: May 1, 2000 :
Attorney Docket No. 020048-003300US :

This is a notice regarding your request for acceptance of a fee deficiency submission under 37 CFR 1.28. On September 1, 1998, the Court of Appeals for the Federal Circuit held that 37 CFR 1.28(c) is the sole provision governing the time for correction of the erroneous payment of the issue fee as a small entity. **See DH Technology v. Synergystex International, Inc. 154 F.3d 1333, 47 USPQ2d 1865 (Fed. Cir. Sept. 1, 1998).**

The Office no longer investigates or rejects original or reissue applications under 37 CFR 1.56. **1098 Off. Gaz. Pat. Office 502 (January 3, 1989).** Therefore, nothing in this Notice is intended to imply that an investigation was done.

Your fee deficiency submission under 37 CFR 1.28 is hereby **ACCEPTED.**

Inquiries related to this communication should be directed to the Office of Petitions Staff at (703) 305-9285.

This file is being forwarded to Technology Center AU 1634.

Wan Laymon
Petitions Examiner
Office of Petitions
Office of the Deputy Commissioner
for Patent Examination Policy

SPE RESPONSE FOR CERTIFICATE OF CORRECTION

Paper No.: _____

DATE : 6-6-07

TO SPE OF : ART UNIT 3766

SUBJECT : Request for Certificate of Correction for Appl. No.: 09/562221 Patent No.: 7167756

Please respond to this request for a certificate of correction within 7 days.

Please review the requested changes/corrections as shown in the **COCIN** document(s) in the IFW application image. No new matter should be introduced, nor should the scope or meaning of the claims be changed.

Please check claims

Please complete the response (see below) and forward the completed response to scanning using document code **COCX**.

E Young

Certificates of Correction Branch

703-308-9390 ext. 117

Thank You For Your Assistance

The request for issuing the above-identified correction(s) is hereby:

Note your decision on the appropriate box.

- ☐ Approved — All changes apply.
- ☑ Approved in Part — Specify below which changes do not apply.
- ☐ Denied — State the reasons for denial below.

Comments: THE WORDING CHANGE IS APPROVED, HOWEVER, IT SHOULD APPLY TO "CLAIM 7, LINE 2 (COLUMN 11, LINE 26)" NOT TO "CLAIM 11, LINE 51".

Carl H. Layno — SPE

3766 — Art Unit

UNITED STATES PATENT AND TRADEMARK OFFICE

COMMISSIONER FOR PATENTS
UNITED STATES PATENT AND TRADEMARK OFFICE
P.O. BOX 1450
ALEXANDRIA, VA 22313-1450
www.uspto.gov

Paper No. 14

Schlumber Technology Corporation
14910 Airline Road
P. O. Box 1590
Rosharon, TX 77583-1590

COPY MAILED

OCT 20 2004

OFFICE OF PETITIONS

In re Application of	:	
Christopher R. McLeod	:	
Application No. 09/562,379	:	ON PETITION
Filed: May 1, 2000	:	
Attorney Docket No. 89.0415 (REDA0110)	:	

This is a decision on the petition under 37 CFR 1.137(b), filed August 9, 2004, to revive the above-identified application.

The petition is **GRANTED**.

Telephone inquiries concerning this decision should be directed to the undersigned at (703) 306-3475.

The application file is being referred to Technology Center 3600 for processing the Request for Continued Examination under 37 CFR 1.114 filed with the instant petition.

Marianne E. Jenkins
Petitions Examiner
Office of Petitions
Office of the Deputy Commissioner
for Patent Examination Policy

UNITED STATES PATENT AND TRADEMARK OFFICE

UNITED STATES DEPARTMENT OF COMMERCE
United States Patent and Trademark Office
Address: COMMISSIONER FOR PATENTS
P.O. Box 1450
Alexandria, Virginia 22313-1450
www.uspto.gov

CHOATE, HALL & STEWART LLP
TWO INTERNATIONAL PLACE
BOSTON, MA 02110

Mail Date: 06/10/2010

Applicant	: John Amrien	: DECISION ON REQUEST FOR
Patent Number	: 7630908	: RECALCULATION of PATENT
Issue Date	: 12/08/2009	: TERM ADJUSTMENT IN VIEW
Application No	: 09/562,386	: OF WYETH
Filed	: 05/01/2000	:
		:

The Patentee's Request for Recalculation is **DISMISSED.**

This Request is deemed ineligible for consideration for one or more of the following reasons:

(A). The patent for which PTA recalculation is requested is either a design or reissue application or is a reexamination proceeding;

(B). The patent for which PTA recalculation is requested resulted from a utility or plant application filed under 35 USC 111(a) before May 29, 2000 and no CPA filed in the application on/after May 29, 2000;

(C). The patent for which PTA recalculation is requested resulted from an international application in which the international filing date was before May 29, 2000 and no CPA filed in the application on/after May 29, 2000;

(D). The patent for which PTA recalculation is requested issued on/after March 2, 2010;

(E). The Request for Recalculation was filed more than 180 days after the grant date of the patent and the request was not filed within two months of a dismissal of a request for reconsideration of the of the patent term under 37 CFR 1.705(d);

(F). The Request for Recalculation is not solely limited to USPTO pre-Wyeth interpretation of 35 U.S.C. 154(b)(2)(A);

or

(G). A civil action was filed pursuant to 35 U.S.C. 154(b)(4)(A)concerning the same patent at issue in this request.

Patentee may file a reply to this decision dismissing the Request for Recalculation. Patentee must file such reply within one month or thirty days, whichever is longer, of the mail date of the decision dismissing the Request for Recalculation. No fee is required if patentee is asserting in the reply that the dismissal for ineligibility is improper.

Patentee should use document code PET.OP if electronically filing a reply to this dismissal. If the USPTO finds that the request was improperly deemed ineligible, the USPTO will mail applicant a recalculation determination.

Patentee should be aware that in order to preserve the right to review in the United States District Court for the District of Columbia of the USPTO patent term adjustment determination, patentee must ensure that he or she also take the steps required under 35 U.S.C. 154(b)(4)(A). Nothing in the request for recalculation should be construed as providing an alternative time frame for commencing a civil action under 35 U.S.C. 154 (b)(4)(A).

Any questions concerning this decision should be directed to the Office of Patent Legal Administration at 571-272-7702.

UNITED STATES PATENT AND TRADEMARK OFFICE

COMMISSIONER FOR PATENTS
UNITED STATES PATENT AND TRADEMARK OFFICE
WASHINGTON, D.C. 20231
www.uspto.gov

Paper No. 8

COPY MAILED

APR 2 1 2003

OFFICE OF PETITIONS

Thomas D. Stadsklev
Florida Foundation Seed Producers Inc.
PO Box 309
Greenwood, FL 32443

In re Application of Chandler Application No. 09/562,439 Filed: May 1, 2000 For: `STRAWBERRY FESTIVAL' STRAWBERRY PLANT	DECISION GRANTING PETITION UNDER 37 CFR 1.137(b)

This is a decision on the petition under 37 CFR 1.137(b) filed March 28, 2003 to revive the above-identified application.

The petition under 37 CFR 1.137(b) is **GRANTED**.

This application became abandoned January 5, 2002 for failure to timely file a proper response to the non-final Office action mailed October 4, 2001. The non-final Office action set a three (3) month non-statutory period for reply. No extensions of time in accordance with 37 CFR 1.136(a) were obtained. Notice of Abandonment was mailed March 12, 2003.

This application is being forwarded to Technology Center 1600 for further processing.

Telephone inquiries related to this decision may be directed to the undersigned at (703) 305-0310.

Alesia M. Brown
Petitions Attorney
Office of Petitions
Office of the Deputy Commissioner
for Patent Examination Policy

PTO/SB/66 (03-09)
Approved for use through 03/31/2012. OMB 0651-0016
U.S. Patent and Trademark Office: U.S. DEPARTMENT OF COMMERCE
Under the Paperwork Reduction Act of 1995, no persons are required to respond to a collection of information unless it displays valid OMB control number.

PETITION TO ACCEPT UNINTENTIONALLY DELAYED PAYMENT OF MAINTENANCE FEE IN AN EXPIRED PATENT (37 CFR 1.378(c))

Patent Number	Issue Date (YYYY-MM-DD)	Application Number	Filing Date (YYYY-MM-DD)	Docket Number (if applicable)
6,237,893	2001-05-29	09/562,462	2000-05-01	

CAUTION: Maintenance fee (and surcharge, if any) payment must correctly identify: (1) the patent number and (2) the application number of the actual U.S. application leading to issuance of that patent to ensure the fee(s) is/are associated with the correct patent. 37 CFR 1.366(c) and (d).

SMALL ENTITY
☒ Patentee claims, or has previously claimed, small entity status. See 37 CFR 1.27.

LOSS OF ENTITLEMENT TO SMALL ENTITY STATUS
☐ Patentee is no longer entitled to small entity status. See 37 CFR 1.27(g)

NOT Small Entity		Small Entity	
Fee	Code	Fee	Code
○ 3 ½ year	(1551)	○ 3 ½ year	(2551)
○ 7 ½ year	(1552)	◉ 7 ½ year	(2552)
○ 11 ½ year	(1553)	○ 11 ½ year	(2553)

SURCHARGE
The surcharge required by 37 CFR 1.20(i)(2) (Fee Code 1558) must be paid as a condition of accepting unintentionally delayed payment of the maintenance fee.

MAINTENANCE FEE (37 CFR 1.20(e)-(g))
The appropriate maintenance fee must be submitted with this petition.

STATEMENT
THE UNDERSIGNED CERTIFIES THAT THE DELAY IN PAYMENT OF THE MAINTENANCE FEE TO THIS PATENT WAS UNINTENTIONAL

PETITIONER(S) REQUEST THAT THE DELAYED PAYMENT OF THE MAINTENANCE FEE BE ACCEPTED AND THE PATENT REINSTATED

THIS PORTION MUST BE COMPLETED BY THE SIGNATORY OR SIGNATORIES

37 CFR 1.378(d) states: "Any petition under this section must be signed by an attorney or agent registered to practice before the Patent and Trademark Office, or by the patentee, the assignee, or other party in interest."

I certify, in accordance with 37 CFR 1.4(d)(4) that I am

○ An attorney or agent registered to practice before the Patent and Trademark Office

○ A sole patentee

○ A joint patentee; I certify that I am authorized to sign this submission on behalf of all the other patentees.

○ A joint patentee; all of whom are signing this e-petition

◉ The assignee of record of the entire interest

The Assignee of record of the entire interest			
Under 37 CFR 3.71 an assignee becomes of record by filing a statement in compliance with 37 CFR 3.73(b). Signature requirements are set forth in 37 CFR 1.4(d), and the undersigned certifies that he / she is empowered to act on behalf of the assignee of the entire interest			
Signature	/Paul Rose/	Date (YYYY-MM-DD)	2009-06-10
Name	Paul Rose, President, Myrlen, Inc., a Florida corp		
Enter Reel and Frame Number		Remove	
Reel Number	000000	Frame Number	0000
Click ADD for additional Reel Number and Frame Number		Add	

This collection of information is required by 37 CFR 1.378(c). The information is required to obtain or retain a benefit by the public which is to file (and by the USPTO to process) an application. Confidentiality is governed by 35 U.S.C. 122 and 37 CFR 1.11 and 1.14. This collection is estimated to take 1 hour to complete, including gathering, preparing, and submitting the completed application form to the USPTO. Time will vary depending upon the individual case. Any comments on the amount of time you require to complete this form and/ or suggestions for reducing this burden, should be sent to the Chief Information Officer, U.S. Patent and Trademark Office, U.S. Department of Commerce, P.O. Box 1450, Alexandria, VA 22313-1450. DO NOT SEND FEES OR COMPLETED FORMS TO THIS ADDRESS. **This form can only be used when in conjunction with EFS-Web. If this form is mailed to the USPTO, it may cause delays in reinstating the patent.**

Privacy Act Statement

The Privacy Act of 1974 (P.L. 93-579) requires that you be given certain information in connection with your submission of the attached form related to a patent application or patent. Accordingly, pursuant to the requirements of the Act, please be advised that: (1) the general authority for the collection of this information is 35 U.S.C. 2(b)(2); (2) furnishing of the information solicited is voluntary; and (3) the principal purpose for which the information is used by the U.S. Patent and Trademark Office is to process and/or examine your submission related to a patent application or patent. If you do not furnish the requested information, the U.S. Patent and Trademark Office may not be able to process and/or examine your submission, which may result in termination of proceedings or abandonment of the application or expiration of the patent.

The information provided by you in this form will be subject to the following routine uses:

1. The information on this form will be treated confidentially to the extent allowed under the Freedom of Information Act (5 U.S.C. 552) and the Privacy Act (5 U.S.C. 552a). Records from this system of records may be disclosed to the Department of Justice to determine whether the Freedom of Information Act requires disclosure of these records.

2. A record from this system of records may be disclosed, as a routine use, in the course of presenting evidence to a court, magistrate, or administrative tribunal, including disclosures to opposing counsel in the course of settlement negotiations.

3. A record in this system of records may be disclosed, as a routine use, to a Member of Congress submitting a request involving an individual, to whom the record pertains, when the individual has requested assistance from the Member with respect to the subject matter of the record.

4. A record in this system of records may be disclosed, as a routine use, to a contractor of the Agency having need for the information in order to perform a contract. Recipients of information shall be required to comply with the requirements of the Privacy Act of 1974, as amended, pursuant to 5 U.S.C. 552a(m).

5. A record related to an International Application filed under the Patent Cooperation Treaty in this system of records may be disclosed, as a routine use, to the International Bureau of the World Intellectual Property Organization, pursuant to the Patent Cooperation Treaty.

6. A record in this system of records may be disclosed, as a routine use, to another federal agency for purposes of National Security review (35 U.S.C. 181) and for review pursuant to the Atomic Energy Act (42 U.S.C. 218(c)).

7. A record from this system of records may be disclosed, as a routine use, to the Administrator, General Services, or his/her designee, during an inspection of records conducted by GSA as part of that agency's responsibility to recommend improvements in records management practices and programs, under authority of 44 U.S.C. 2904 and 2906. Such disclosure shall be made in accordance with the GSA regulations governing inspection of records for this purpose, and any other relevant (i.e., GSA or Commerce) directive. Such disclosure shall not be used to make determinations about individuals.

8. A record from this system of records may be disclosed, as a routine use, to the public after either publication of the application pursuant to 35 U.S.C. 122(b) or issuance of a patent pursuant to 35 U.S.C. 151. Further, a record may be disclosed, subject to the limitations of 37 CFR 1.14, as a routine use, to the public if the record was filed in an application which became abandoned or in which the proceedings were terminated and which application is referenced by either a published application, an application open to public inspections or an issued patent.

9. A record from this system of records may be disclosed, as a routine use, to a Federal, State, or local law enforcement agency, if the USPTO becomes aware of a violation or potential violation of law or regulation.

UNITED STATES PATENT AND TRADEMARK OFFICE

Commissioner for Patents
United States Patent and Trademark Office
P.O. Box 1450
Alexandria, VA 22313-1450
www.uspto.gov

In re Patent No. 6237893
Issue Date: May 29,2001
Application No. 09562462
Filed: May 1,2000
Attorney Docket No. MY1

:
:DECISION GRANTING PETITION
:UNDER 37 CFR 1.378(c)
:

This is a decision on the electronic petition, filed June 11,2009 ,under 37 CFR 1.378(c) to accept the unintentionally delayed payment of the 7.5 year maintenance fee for the above-identified patent.

The petition is **GRANTED**.

The maintenance fee is accepted, and the above-identified patent reinstated as of June 11,2009 .
This decision also constitutes notice that the fee has been accepted. An electronic copy of the petition and this decision has been created as an entry in the Image File Wrapper. Nevertheless, petitioner should print and retain an independent copy.

Telephone inquiries related to this electronic decision should be directed to the Electronic Business Center at 1-866-217-9197.

UNITED STATES PATENT AND TRADEMARK OFFICE

Commissioner for Patents
United States Patent and Trademark Office
Washington, D.C. 20231
www.uspto.gov

Paper No. 9

Randall B. Bateman
5882 South 900
Suite 300
Salt Lake City, UT 84121

COPY MAILED

NOV 0 5 2002

OFFICE OF PETITIONS

In re Application of
Kenneth H. Rhodes
Application No. 09/562,482
Filed: May 1, 2000
Attorney Docket No. 1666.MODE.SM

ON PETITION

This is a decision on the petition under 37 CFR 1.137(b), filed October 18, 2002, to revive the above-identified application.

The petition is Granted.

The above-identified application became abandoned for failure to reply in a timely manner in reply to the non-final Office action mailed September 19, 2001, which set a reply period of (1) ONE MONTH from the mail date of the Notice. No extensions of time under the provisions of 37 CFR 1.136(a) have been obtained. Accordingly, the application became abandoned on October 20, 2001.

The application file is being forwarded to Technology Center AU 1761 for further processing.

Telephone inquiries concerning this decision should be directed to Latrice Bond at (703) 308-6911.

Latrice Bond

Latrice Bond
Paralegal Specialist
Office of Petitions
Office of the Deputy Commissioner
For Patent Examination Policy

UNITED STATES PATENT AND TRADEMARK OFFICE

Commissioner for Patents
United States Patent and Trademark Office
P.O. Box 1450
Alexandria, VA 22313-1450
www.uspto.gov

ARTHROCARE CORPORATION
680 VAQUEROS AVENUE
SUNNYVALE, CA 94085-3523

COPY MAILED

FEB 22 2005

OFFICE OF PETITIONS

In re Application of :
David C. Hovda, et al. :
Application No. 09/562,496 :
Filed: May 1, 2000 :
Attorney Docket No. E-7-3 :

ON PETITION

This is a decision on the petition under 37 CFR 1.137(b), filed September 13, 2004, to revive the above-identified application.

The petition is **GRANTED.**

The above-identified application became abandoned for failure to reply in a timely manner to the final Office action mailed January 29, 2004, which set a shortened statutory period for reply of three (3) months. A one-month extension of time under the provisions of 37 CFR 1.136(a) was obtained. An Advisory action was also mailed August 25, 2004 indicating that the reply filed on June 3, 2004 failed to place the application in condition for allowance. Accordingly, the application became abandoned on June 1, 2004.

In view of the submission of the petition fee in the large entity amount of $1330.00, status as a small entity has been removed.

Since the present RCE was filed without a submission, the unentered amendment filed June 1, 2004 will be considered the submission required under 37 CFR 1.114.

Telephone inquiries concerning this decision should be directed to the undersigned at (571) 272-3229.

The application file is being forwarded to Technology Center 3700, Art Unit 3763 for processing the Request for Continued Examination under 37 CFR 1.114 filed with the instant petition.

Retta Williams

Retta Williams
Petitions Examiner
Office of Petitions
Office of the Deputy Commissioner
for Patent Examination Policy

UNITED STATES PATENT AND TRADEMARK OFFICE

Commissioner for Patents
United States Patent and Trademark Office
P.O. Box 1450
Alexandria, VA 22313-1450
www.uspto.gov

JJGJR.: 07-05

Paper No: __

COPY MAILED

JUL 0 8 2005

OFFICE OF PETITIONS

BROWN, RAYSMAN, MILLSTEIN,
FELDER & STEINER LLP
900 THIRD AVENUE
NEW YORK NY 10022

In re Application of
Bang, et al. :
Application No. 09/562,506 :
Filing Date: 1 May, 2000
Attorney Docket No.3524/11 :

This is a decision on the petition filed on 4 February (and resubmitted via FAX on 7 July), 2005,[1] to revive the instant application 37 C.F.R. §1.137(b) as having been abandoned due to unintentional delay.

For the reasons set forth below, the petition under 37 C.F.R. §1.137(b) is **GRANTED**.

BACKGROUND

The record reflects that:

- Petitioner failed to reply timely and properly to the non-final Office action mailed on 9 October, 2003, with reply due absent extension of time on or before Friday, 9 January, 2004;

[1] It appears that, although Petitioner filed the Amendment with a correct application number, the instant petition was filed incorrectly bearing Application No. 09/562,706, rather than Application No. 09/562,506, and thus–due to Petitioner's error–the petition was not matched with the file until this writing.

- on 9 April, 2004, Petitioner filed a request and fee for a three- (3-) month extension of time and a Request for Continued Examination (RCE) under 37 C.F.R. §1.114,[2] which request constituted an improper RCE because it was submitted as a reply to the non-final Office action and an RCE is a proper reply only to a final Office action;

- the instant application went abandoned after midnight 9 April, 2004;

- it appears that the Office did not mail a Notice of Abandonment before the instant petition was filed;

- with the instant petition (resubmitted on 7 July, 2005, with a copy of the date-stamped (FEB 04 2005) receipt card (see: MPEP §503[3])) and fee,[4] Petitioner filed an amendment

---

[2] The regulations at 37 C.F.R. §1.114 provide:

§ 1.114 Request for continued examination.

(a) If prosecution in an application is closed, an applicant may request continued examination of the application by filing a submission and the fee set forth in § 1.17(e) prior to the earliest of:

(1) Payment of the issue fee, unless a petition under § 1.313 is granted;

(2) Abandonment of the application; or

(3) The filing of a notice of appeal to the U.S. Court of Appeals for the Federal Circuit under 35 U.S.C. 141, or the commencement of a civil action under 35 U.S.C. 145 or 146, unless the appeal or civilaction is terminated.

(b) Prosecution in an application is closed as used in this section means that the application is under appeal, or that the last Office action is a final action (§ 1.113), a notice of allowance (§ 1.311), or an action that otherwise closes prosecution in the application.

(c) A submission as used in this section includes, but is not limited to, an information disclosure statement, an amendment to the written description, claims, or drawings, new arguments, or new evidence in support of patentability. If reply to an Office action under 35 U.S.C. 132 is outstanding, the submission must meet the reply requirements of § 1.111.

(d) If an applicant timely files a submission and fee set forth in § 1.17(e), the Office will withdraw the finality of any Office action and the submission will be entered and considered. If an applicant files a request for continued examination under this section after appeal, but prior to a decision on the appeal, it will be treated as a request to withdraw the appeal and to reopen prosecution of the application before the examiner. An appeal brief under § 1.192 or a reply brief under § 1.193(b), or related papers, will not be considered a submission under this section.

(e) The provisions of this section do not apply to:

(1) A provisional application;

(2) An application for a utility or plant patent filed under 35 U.S.C. 111(a) before June 8, 1995;

(3) An international application filed under 35 U.S.C. 363 before June 8, 1995;

(4) An application for a design patent; or

(5) A patent under reexamination

[Added 65 FR 14865, Mar. 20, 2000, effective May 29, 2000; revised 65 FR 50092, Aug. 16, 2000, effective Aug.16, 2000]

[3] MPEP §503 provides in pertinent part:

§503 Application Number and Filing Receipt

* * *

A return postcard should be attached to *each* patent application for which a receipt is desired. It is important that the return postcard itemize all of the components of the application. If the postcard does not itemize each of the components of the application, it will not serve as evidence that any component which was not itemized was received by the United States Patent and Trademark Office (USPTO). It should be recognized that the identification of an application by application number does not necessarily signify that the USPTO has accepted the application as complete (37 C.F.R. §1.53(a)).

* * *

RETURN POSTCARD

If a receipt of any item (e.g., paper or fee) filed in the USPTO is desired, it may be obtained by enclosing with the paper a self-addressed postcard specifically identifying the item. The USPTO will stamp the receipt date on the postcard and place it in the outgoing mail. A postcard receipt which itemizes and properly identifies the items which are being filed serves as *prima facie* evidence of receipt in the USPTO of all the items listed thereon on the date stamped thereon by the USPTO.

The identifying data on the postcard should be so complete as to clearly identify the item for which receipt is requested. For example, the postcard should identify the applicant's name, application number (if known), confirmation number (if known), filing date, interference number, title of the invention, etc. The postcard should also identify the type of paper being filed, e.g., new application, affidavit, amendment, notice of

as the required reply and made the statement of unintentional delay.

STATUTES, REGULATIONS AND ANALYSIS

Congress has authorized the Commissioner to "revive an application if the delay is shown to the satisfaction of the Commissioner to have been "unavoidable." 35 U.S.C. §133 (1994).[5]

The regulations at 37 C.F.R. §1.137(a) and (b) set forth the requirements for a petitioner to revive a previously unavoidably or unintentionally, respectively, abandoned application under this congressional grant of authority. The language of 35 U.S.C. §133 and 37 C.F.R. §1.137(a) is clear, unambiguous, and without qualification: the delay in tendering the reply to the outstanding Office action, as well as filing the first petition seeking revival, must have been unavoidable for the reply now to be accepted on petition.[6]

Delays in responding properly raise the question whether delays are unavoidable.[7] Where there is a question whether the delay was unavoidable, Petitioners must meet the burden of establishing

---

appeal, appeal brief, drawings, fees, motions, supplemental oath or declaration, petition, etc., and the number of pages being submitted. If a new application is being filed, all parts of the application being submitted should be separately listed on the postcard, e.g., the number of pages of specification (including written description, claims and abstract), number of claims, number of sheets of drawings, number of pages of oath/declaration, number of pages of cover sheet (provisional application).

The postcard receipt will not serve as *prima facie* evidence of receipt of any item which is not adequately itemized on the postcard. For example, merely listing on the postcard "a complete application" or "patent application" will not serve as a proper receipt for each of the required components of an application (e.g., specification (including claims), drawings (if necessary), oath or declaration and the application filing fee) or missing portions (e.g., pages, sheets of drawings) of an application if one of the components or portion of a component is found to be missing by the USPTO. Each separate component should be specifically and properly itemized on the postcard. Furthermore, merely incorporating by reference in the postcard receipt, the items listed in a transmittal letter will not serve as *prima facie* evidence of receipt of those items.

The person receiving the item(s) in the USPTO will check the listing on the postcard against the item(s) being filed to be sure they are properly identified and that all the items listed on the postcard are presently being submitted to the USPTO. If any of the items listed on the postcard are not being submitted to the USPTO, those items will be crossed off and the post-card initialed by the person receiving the items. Upon return of a postcard receipt from the USPTO, the postcard receipt should be promptly reviewed by the person who filed the items to ensure that every item specifically denoted on the postcard was received by the USPTO. If the postcard receipt has been annotated to indicate that a particular item denoted on the postcard was not received by the USPTO, the postcard receipt will not serve as *prima facie* evidence of receipt of that item in the USPTO. (Emphasis supplied.)

[4] The fee for the instant petition is being re-directed from the application number to which Petitioner incorrectly directed it (to wit: Application No. 09/562,706), to the proper application number (to wit: Application No. 09/562,506.

[5] 35 U.S.C. §133 provides:
35 U.S.C. §133 Time for prosecuting application.
Upon failure of the applicant to prosecute the application within six months after any action therein, of which notice has been given or mailed to the applicant, or within such shorter time, not less than thirty days, as fixed by the Commissioner in such action, the application shall be regarded as abandoned by the parties thereto, unless it be shown to the satisfaction of the Commissioner that such delay was unavoidable.

[6] Therefore, by example, an unavoidable delay in the payment of the Filing Fee might occur if a reply is shipped by the US Postal Service, but due to catastrophic accident, the delivery is not made.

[7] See: *Changes to Patent Practice and Procedure; Final Rule Notice*, 62 *Fed. Reg.* at 53158-59 (October 10, 1997), 1203 *Off. Gaz. Pat. Office* at 86-87 (October 21, 1997).

that the delay was unavoidable within the meaning of 35 U.S.C. §133 and 37 C.F.R. §1.137(a).[8] And the Petitioner must be diligent in attending to the matter.[9] Failure to do so does not constitute the care required under Pratt, and so cannot satisfy the test for diligence and due care.

(By contrast, unintentional delays are those that do not satisfy the very strict statutory and regulatory requirements of unavoidable delay, and also, by definition, are not intentional.[10]))

Allegations as to Unintentional Delay

A grantable petition under 37 C.F.R. §1.137(b) requires a petition, fee, statement of unintentional delay, reply, and a terminal disclaimer and fee if appropriate.

Petitioner has satisfied the requirements of the regulation.

The record (including the petition filed on 4 February, 2005) does not necessitate a finding that the delay between midnight 9 April, 2004 (date of abandonment), and 4 February, 2005 (date of filing of grantable petition), was not unintentional.

Rather, the Patent and Trademark Office is relying in this matter on duty of candor and good faith of Petitioner's Counsel Frank DeRosa (Reg. No. 26,543) when accepting Petitioner's representation that the delay in filing the response was unintentional.[11]

CONCLUSION

The petition under 37 C.F.R. §1.137(b) is **granted**.

The instant application is released to Technology Center 3600 for further processing in due course.

---

[8] See: In re Application of G, 11 USPQ2d 1378, 1380 (Comm'r Pats. 1989).

[9] See: Diligence in Filing Petitions to Revive and Petitions to Withdraw the Holding of Abandonment, 1124 Off. Gaz. Pat. Office 33 (March 19, 1991). It was and is Petitioner's burden to exercise diligence in seeking either to have the holding of abandonment withdrawn or the application revived. See 1124 Off. Gaz. Pat. Office supra.

[10] Therefore, by example, an unintentional delay in the reply might occur if the reply and transmittal form are to be prepared for shipment by the US Postal Service, but other pressing matters distract one's attention and the mail is not timely deposited for shipment.

[11] See Changes to Patent Practice and Procedure, 62 Fed. Reg. at 53160 and 53178, 1203 Off. Gaz. Pat. Office at 88 and 103 (responses to comments 64 and 109)(applicant obligated under 37 C.F.R. §10.18 to inquire into the underlying facts and circumstances when providing the statement required by 37 C.F.R. §1.137(b) to the Patent and Trademark Office).

Telephone inquiries concerning this decision may be directed to the undersigned at (571) 272-3214.

John J. Gillon, Jr.
Senior Attorney
Office of Petitions

UNITED STATES PATENT AND TRADEMARK OFFICE

COMMISSIONER FOR PATENTS
UNITED STATES PATENT AND TRADEMARK OFFICE
P.O. BOX 1450
ALEXANDRIA, VA 22313-1450
www.uspto.gov

MAIL

FEB 25 2004

DIRECTOR OFFICE
TECHNOLOGY CENTER 2100

Paper No. 15

FISH & RICHARDSON PC
225 FRANKLIN ST
BOSTON MA 02110

In re Application of: JANE WEU CHANG, ET AL.
Application No.: 09/562,547
Filed: May 02, 2000
For: **INTELLIGENT DISCARD IN INFORMATION ACCESS SYSTEM**

DECISION ON PETITION TO WITHDRAW THE HOLDING OF ABANDONMENT

This is in reply to Petitioner's petition to Withdraw the Holding of Abandonment filed in the United States Patent and Trademark Office on January 20, 2004. No fee is required.

The petition is **DISMISSED**.

A review of the file record reveals that the application was held abandoned for failure to pay the required issue fee within the Shortened Statutory Period of three months set in the Office Letter mailed August 25, 2003.

The file record also indicates that the Office Letter was mailed to Petitioner at the address of record on August 25, 2003. There is a strong presumption that mail properly addressed and delivered to the United States Postal Service is in fact delivered to the addressee. This presumption may be overcome by a showing that the Office Letter was not, in fact, received. MPEP 711.03(c)II states that:

> The showing required to establish nonreceipt of an Office communication must include a statement from the practitioner stating that the Office communication was not received by the practitioner and attesting to the fact that a search of the file jacket and docket records indicates that the Office communication was not received. A copy of the docket record where the nonreceived Office communication would have been entered had it been received and docketed must be attached to and referenced in practitioner's statement. For example, if a three month period for reply was set in the nonreceived Office action, a copy of the docket report showing all replies docketed for a date three months from the mail date of the nonreceived Office action must be submitted as documentary proof of nonreceipt of the Office action.

Petitioner has failed to establish the nonreceipt of the Office Letter as required by MPEP 711.03(c)II because Petitioner's submission does not include **a statement from the practitioner** stating that the Office communication was not received by the practitioner and **attesting** to the fact that **a search of the file jacket and docket records** indicates that the Office communication was not received.

For the above stated reasons, the Petition is **DISMISSED**. Any request for reconsideration must be filed within TWO MONTHS of the mailing date of this decision.

Bot LeDynh, J.D., Ph.D.
Special Programs Examiner
Technology Center 2100
Computer Architecture, Software, and Information Security
(703) 305-0651

#17

UNITED STATES PATENT AND TRADEMARK OFFICE

MAILED

JUL 13 2004

TECHNOLOGY CENTER 2100

COMMISSIONER FOR PATENTS
UNITED STATES PATENT AND TRADEMARK OFFICE
P.O. BOX 1450
ALEXANDRIA, VA 22313-1450
www.uspto.gov

Paper No. 17

Kenneth Kozik
Fish & Richardson PC
225 Franklin St
Boston, MA 02110

In re Application of: Chang et al.	)	
Application No. 09/562,547	)	DECISION ON PETITION TO
Attorney Docket No. 11646-003001	)	WITHDRAW HOLDING OF
Filed: May 2, 2000	)	ABANDONMENT UNDER 37 CFR
For: INTELLIGENT DISCARD IN	)	§1.181
INFORMATION ACCESS SYSTEM	)	

This is a decision on the request for reconsideration filed on April 19, 2004. The instant application was held abandoned for failure to timely pay the issue fee due in response to the Notice of Allowance and Fee(s) Due (PTOL-85) mailed August 25, 2003. A petition to withdraw the holding of abandonment based on failure to receive the office action (M.P.E.P. §711.03(c)) was timely filed on January 20, 2004 and subsequently dismissed in the decision mailed on February 25, 2004 for the reasons set forth therein.

Petitioner has provided supplemental evidence in the latest filing which includes practitioner's statement asserting to the fact that extensive searches of the file jacket and docket records confirm that the Office communication was not received. Petitioner has also provided a copy of the docket report referred to therein. With respect to the computer print-out docket report, practitioner should consider providing a discussion of how the report is set up and/or structured to one unfamiliar with its formatting (i.e. a discussion of what the print-out is meant to convey), as well as to more clearly identify on the docket report where the non-receipt office action would have appeared, had it been received, to assist deciding officials in the future.

The guidelines outlined in MPEP § 711.03(c) I(A) Petition to Withdraw Holding of Abandonment Based on Failure to Receive Office Action requires:

a) a statement from the practitioner that the Office communication was not received by the practitioner;
b) a statement from the practitioner that a search of the file jacket and docket records was made and the Office communication was not received;
c) a copy of the docket record where the nonreceived Office communication would have been received and docketed; and
d) a reference to the docket record in the practitioner's statement.

Since all of the criteria set forth above have been met, the petition is **GRANTED**.

The application is being forwarded to the Supervisory Legal Instruments Examiner with instructions to withdraw the holding of abandonment and restore the instant application to pending status, before redating and remailing the Notice of Allowance and Issue fees due to the applicant.

7/12/04

Brian L. Johnson
Special Programs Examiner
Technology Center 2100
Computer Architecture, Software, and Information Security
703-308-0885

BLJ: 7/8/04

UNITED STATES PATENT AND TRADEMARK OFFICE

Commissioner for Patents
United States Patent and Trademark Office
P.O. Box 1450
Alexandria, VA 22313-1450
www.uspto.gov

HOLLAND & KNIGHT
10 ST. JAMES AVENUE
BOSTON, MA 02116

COPY MAILED

FEB 1 5 2006

OFFICE OF PETITIONS

In re Application of	:	
Jane Weu Chang et al	:	
Application No. 09/562,547	:	ON PETITION
Filed: May 2, 2000	:	
Attorney Docket No. 11646-003001	:	

This is a decision on the petition under 37 CFR 1.313(b), filed February 14, 2006, which is being treated under 37 CFR 1.313(c)(2), to withdraw the above-identified application from issue after payment of the issue fee.

The petition is **GRANTED**.

The above-identified application is withdrawn from issue for consideration of a submission under 37 CFR 1.114 (request for continued examination). See 37 CFR 1.313(c)(2).

Petitioner is advised that the issue fee paid on January 3, 2006 in the above-identified application cannot be refunded. If, however, the above-identified application is again allowed, petitioner may request that it be applied towards the issue fee required by the new Notice of Allowance.[1]

Telephone inquiries should be directed to Wan Laymon at (571) 272-3220.

This matter is being referred to Technology Center AU 2167 for processing of the request for continued examination under 37 CFR 1.114.

Wan Laymon

Wan Laymon
Petitions Examiner
Office of Petitions

---

[1] The request to apply the issue fee to the new Notice may be satisfied by completing and returning the new Issue Fee Transmittal Form PTOL-85(b), which includes the following language thereon: "Commissioner for Patents is requested to apply the Issue Fee and Publication Fee (if any) or re-apply any previously paid issue fee to the application identified above." Petitioner is advised that, whether a fee is indicated as being due or not, the Issue Fee Transmittal Form **must** be completed and timely submitted to avoid abandonment. Note the language in bold text on the first page of the Notice of Allowance and Fee(s) Due (PTOL-85).

UNITED STATES PATENT AND TRADEMARK OFFICE

Commissioner for Patents
United States Patent and Trademark Office
P.O. Box 1450
Alexandria, VA 22313-1450
www.uspto.gov

OPPENHEIMER WOLFF &
DONNELLY, LLP
PLAZA VII, SUITE 3300
45 SOUTH SEVENTH STREET
MINNEAPOLIS, MN 55402-1609

COPY MAILED
FEB 20 2007
OFFICE OF PETITIONS

In re Application of	:	
Yelich, et al.	:	
Application No. 09/562,668	:	ON PETITION
Filed: May 1, 2000	:	
Attorney Docket No. AND1P591	:	

This is a decision on the petition to withdraw the holding of abandonment under 37 CFR 1.181, filed December 8, 2006.

The petition under 37 CFR 1.181(a) to withdraw the holding of abandonment is **granted**.

This application was held abandoned on July 8, 2006, after it was believed that no response was received to the non-final Office action mailed April 7, 2006. The notice allowed a shortened statutory period for reply of three (3) months from its mailing date. Extensions of the time set for reply were available pursuant to 37 CFR 1.136(a). A Notice of Abandonment was mailed on November 15, 2006.

The instant petition maintains that a timely response to the non-final Office action was filed on October 9, 2006, along with a request for an extension of time within the third month. The response is noted in the record as of October 9, 2006. It is noted that October 7, 2006—the last day of the maximum statutory period for reply—was a Saturday. It is further noted that October 9, 2006—the date the response was filed—was the first business day on which applicant could have filed the response. The response and the request for an extension of time within the third month is, therefore, considered timely. See 37 CFR 1.7. The holding of abandonment is withdrawn as a response was received within the maximum statutory period for reply.

The application file is being forwarded to Technology Center 3600, GAU 3627 for further processing, include entry and review of the amendment filed October 9, 2006.

Questions regarding this decision may be directed to the undersigned at (571) 272-3222.

Kenya A. McLaughlin
Petitions Attorney
Office of Petitions

UNITED STATES PATENT AND TRADEMARK OFFICE

COMMISSIONER FOR PATENTS
UNITED STATES PATENT AND TRADEMARK OFFICE
WASHINGTON, DC 20231
www.uspto.gov

Paper No. 4

PATENT LEGAL STAFF
EASTMAN KODAK COMPANY
343 STATE STREET
ROCHESTER NY 14650-2201

MAILED

APR 0 7 2003

DIRECTOR'S OFFICE
TECHNOLOGY CENTER 2600

In re Application of:
Paul P. Lee
Application No. 09/562,712
Filed: April 28, 2000
For: **IMAGE SENSOR PIXEL FOR GLOBAL ELECTRONIC SHUTTERING**

DECISION ON PETITION TO MAKE SPECIAL

This is a decision on the petition to make special, filed March 25, 2003, under MPEP 708.01 (I), delay in prosecution.

For a petition to make special under MPEP § 708.01, (I), the application must be pending for more than five years, including those, which, by relation to a prior United States application, have an effective pendency of more than five years. See MPEP § 707.02.

The application has been pending for less than five years, "*over 3 years old*" according to the Applicant. Applicant may consider requesting special status under MPEP § 708.02, VIII.

Accordingly, the petition is **DENIED**.

Petitioner is given TWO MONTHS from the date of this decision to request reconsideration and supplement the original petition as appropriate.

The application file will be returned to the Technology Center's central files storage area to await action in its regular turn.

Kenneth Wieder
Special Program Examiner
Technology Center 2600
Communications
(703) 305-4710

UNITED STATES PATENT AND TRADEMARK OFFICE

Commissioner for Patents
United States Patent and Trademark Office
P.O. Box 1450
Alexandria, VA 22313-1450
www.uspto.gov

BETH READ
PATENT LEGAL STAFF
EASTMAN KODAK COMPANY
343 STATE STREET
ROCHESTER, NY 14650-2201

COPY MAILED
JAN 0 4 2006
OFFICE OF PETITIONS

In re Application of	:	
Paul P. Lee	:	
Application No. 09/562,712	:	ON PETITION
Filed: April 28, 2000	:	
Attorney Docket No. 80985JDL	:	

This is a decision on the petition under 37 CFR 1.137(b), filed December 19, 2005, to revive the above-identified application.

The petition is **GRANTED**.

This application became abandoned for failure to timely file a proper reply to the final Office action mailed June 2, 2005. A two (2) month extension of time having been obtained pursuant to the provisions of 37 CFR 1.136(a), the date of abandonment of this application is November 3, 2005.

Pursuant to 37 CFR 1.136, an extension of time must be filed prior to the expiration of the maximum period obtainable for reply to avoid abandonment. Accordingly, since the $120.00 extension of time submitted with the petition on December 19, 2005 was subsequent to the maximum period obtainable for reply, this fee is unnecessary and will be credited to petitioner's deposit account no. 05-0225.

The file is being forwarded to Technology Center 2600 for review of the RCE, filed December 19, 2005.

Telephone inquiries concerning this matter may be directed to the undersigned at (571) 272-3228.

Edward J. Tannouse
Petitions Attorney
Office of Petitions/Patent
Office of the Deputy Commissioner
for Patent Examination Policy

UNITED STATES PATENT AND TRADEMARK OFFICE

Commissioner for Patents
United States Patent and Trademark Office
P.O. Box 1450
Alexandria, VA 22313-1450
www.uspto.gov

COPY MAILED
DEC 0 7 2006
OFFICE OF PETITIONS

LEVINE BAGADE HAN LLP
2483 EAST BAYSHORE ROAD, SUITE 100
PALO ALTO CA 94303

In re Application of	:	
SHANKAR, et al.	:	
Application No. 09/562,785	:	DECISION ON PETITION
Filed: May 2, 2000	:	TO WITHDRAW
Attorney Docket No. PORTNZ00600	:	FROM RECORD
	:	

This is a decision on the Request to Withdraw as attorney or agent of record under 37 C.F.R. § 1.36(b), filed October 5, 2006.

The request is **APPROVED**.

A grantable request to withdraw as attorney/agent of record must be signed by every attorney/agent seeking to withdraw or contain a clear indication that one attorney is signing on behalf of another/others. A request to withdraw will not be approved unless at least 30 (thirty) days would remain between the date of approval and the later of the expiration date of a time to file a response or the expiration date of the maximum time period which can be extended under 37 C.F.R. § 1.136(a).

The request was signed by David A. Levine on behalf of all attorneys of record who are associated with customer No. 40518. All attorneys/agents associated with the Customer Number 40518 have been withdrawn. Applicant is reminded that there is no attorney of record at this time.

The request to change the correspondence of record is not acceptable as the requested correspondence address is not that of: (1) the first named signing inventor; or (2) an intervening assignee of the entire interest under 37 C.F.R 3.71. All future communications from the Office will be directed to the first named signing inventor at the first copied address below until otherwise properly notified by the applicant.

Telephone inquiries concerning this decision should be directed to the undersigned at 571-272-7253.

Monica A. Graves
Petitions Examiner
Office of Petitions

cc: **RAVI SHANKAR**
4325 RENAISSANCE DRIVE, #122
SAN JOSE, CA 95134

cc: **WILLIAM SHAFFER, ESQ.**
TOWNSEND TOWNSEND & CREW LLP
279 LYTTON AVENUE
PALO ALTO, CA 94301

UNITED STATES PATENT AND TRADEMARK OFFICE

Commissioner for Patents
United States Patent and Trademark Office
P.O. Box 1450
Alexandria, VA 22313-1450
www.uspto.gov

FISH & RICHARDSON P.C.
P.O. Box 1022
MINNEAPOLIS MN 55440-1022

MAILED

JAN 12 2006

DIRECTOR'S OFFICE
TECHNOLOGY CENTER 2600

In re Application of:
Pierre Louveaux
Application Serial No.: 09/562,797
Filed: May 2, 2000
For: **RESTRICTING SCOPE OF BLENDING MODES IN 2-D COMPOSITING USING ISOLATED GROUPS**

DECISION ON PETITION

This is a decision on the petition to withdraw the final action as premature, filed October 24, 2005, pursuant to 37 CFR § 1.181.

Petitioner alleges that the examiner erred in holding the Office action mailed September 22, 2005 final and requests withdrawal of finality of the Office action.

A non-final Office action was mailed on August 3, 2004. Applicant filed an amendment to the claims on November 3, 2004, specifically amending the independent claims. On September 22, 2005 the Office mailed a final Office action.

Petitioner argues that the differences between the claims before and after the amendment filed on November 3, 2004, did not necessitate the grounds for rejection. Petitioner further argues that the previous reference applied to the claims, prior to amendment, could have also been used as teaching the newly amended claims. Specifically, petitioner argues "..the rejection made in the prior action applied with equal force to the claims as amended in the response to that action".

MPEP §706.07(a) [R-1] Final Rejection, When Proper on Second Action, states in part:

> Due to the change in practice as affecting final rejections, older decisions on questions of prematureness of final rejection or admission of subsequent amendments do not necessarily reflect present practice.
> Under present practice, second or any subsequent actions on the merits shall be final, except where the examiner introduces a new ground of rejection that is neither necessitated by applicant's amendment of the claims nor based on information submitted in an information disclosure statement filed during the period set forth in 37 CFR 1.97(c) with the fee set forth in 37 CFR 1.17(p).

Applicant admits, and the file record confirms that both independent claims were amended in applicant's response of November 3, 2004. Therefore, the issue to be addressed in determining the appropriateness of the finality of the September 24, 2005 Office action, is whether or not applicant's response necessitated the examiner's new ground of rejection.

A review of claim 1 as representative of the amendments made by the applicant, reveals the following alteration.

Claim 1 prior to the November 3, 2004 amendment reads in part:

1. A method for processing digital graphical elements, comprising:

identifying as a group of two or more contiguous digital graphical elements in a stack of digital graphical elements, digital graphical elements beneath the group in the

stack specifying a background for the group; determining whether the group is designated as an isolated group...

Claim 1 after the November 3, 2004 amendment reads in part:
1. A method for processing digital graphical elements, comprising:
receiving a stack of digital graphical elements including a group, the group being a set of two or more contiguous digital graphical elements in the stack of digital graphical elements, digital graphical elements beneath the group in the stack specifying a background for the group; determining whether the group is designated as an isolated group...

The step of identifying implies a positive act of recognition or relationship i.e., recognition of or the relationship of one specific "group" of items from or with respect to others. Thus, a step of identifying inherently requires active comparison between items in order to carry out the step of "identifying".

The step of receiving, i.e., a "stack" of data containing "groups", does not specifically require a step of identification, i.e., the "groups" may or may not have already been identified prior to receipt. In other words, the step of receiving does not require any comparison of the digital graphical elements, just receipt of items.

It is apparent that applicant has altered the scope of the representative claim in order to overcome the examiner's position. Specifically, the Winner teaches that any non-opaque object which is behind an opaque object in a buffer, is discarded. Although Winner does teach receipt of elements, it does not necessarily teach receipt of stacks of those elements with predetermined groupings, contrary to the assertion by the practitioner that the Winner reference could still read on the amended "receiving" limitation. The examiner relied upon the identification of elements from the Winner reference, in order to determine an isolated grouping. Applicant's amendment to the representative claim wherein the stack is received with groupings, removes the reference's teaching of using a Z-buffer to determine which objects are displayed in front of or behind another object and thus removes the examiner's position of identification of an isolated group. Therefore, it is clear that applicant's amendment was made in order to weaken or remove the examiner's interpretation of the Winner reference, with respect to determining the isolated group, regardless if the Winner reference still "receives" elements.

Therefore, applicant's amendment necessitated the examiner's new ground of rejection and in accordance with MPEP §706.07(a), the next action was appropriately made final based upon the new grounds of rejection.

Accordingly, the petition to withdraw finality is **DENIED**.

Any request for reconsideration must be filed within two months form the date of this decision. Petitioner may wish to consider filing a petition to revive an unintentionally abandoned application in accordance with 37 CFR § 1.137(b).

Leo Boudreau

Leo Boudreau, acting Director
Technology Center 2600
Communications

UNITED STATES PATENT AND TRADEMARK OFFICE

COMMISSIONER FOR PATENTS
UNITED STATES PATENT AND TRADEMARK OFFICE
P.O. BOX 1450
ALEXANDRIA, VA 22313-1450
www.uspto.gov

Paper No.

Randall L. Reed
183 East King Road
Ithaca, NY 14850

COPY MAILED
JUL 01 2005
OFFICE OF PETITIONS

In re Application of	:	
Mohammed Shaikh	:	DECISION ON PETITION
Application No. 09/562,808	:	
Filed: May 1, 2000	:	
Attorney Docket No. 2035.300	:	
	:	

This is a decision on the "Petition for Revival of an Application for Patent Abandoned Unintentionally under 37 CFR § 1.137(b)," filed June 3, 2005.

The petition is **DISMISSED**.

Any request for reconsideration must be submitted within **TWO (2) MONTHS** from the mail date of this decision. Extensions of time under 37 C.F.R. §1.136(a) are permitted. The reconsideration request should include a cover letter entitled "Renewed Petition under 37 C.F.R. § 1.137(b)."

The above-identified application became abandoned for failure to timely pay the required issue fee within the statutory period of three (3) months from the mailing date, October 12, 2004, of the Notice of Allowance and Fee(s) Due. Applicant also failed to timely submit new drawings in response to the accompanying Notice of Allowability. No extensions of time are permitted for transmitting issue fees (or submitting new drawings). No timely reply having been received, the above-identified application became abandoned on January 13, 2005. A courtesy Notice of Abandonment was mailed on March 7, 2005.

A grantable petition pursuant to 37 CFR § 1.137(b) must be accompanied by (1) The reply required to the outstanding Office action or notice, unless previously filed; (2) The petition fee as set forth in § 1.17(m); (3) A statement that the entire delay in filing the required reply from the due date for the reply until the filing of a grantable petition pursuant to this paragraph was unintentional. The Director may require additional information where there is a question whether the delay was unintentional; and (4) Any terminal disclaimer (and fee as set forth in § 1.20(d)) required pursuant to paragraph (d) of this section.

The instant petition does not satisfy requirement (1). The petition as filed included neither payment of the full issue fee or submission of corrected drawings. Corrected drawings were received on June 14, 2005. However, payment of the issue fee remains deficient. The petition included payment of the issue fee in the amount of $685. Payment of the issue fee is due in the amount in effect on the date of submission. The issue fee, as it was on June 3, 2005, and as it is currently is $750. Payment of the deficiency of $65 is now required to revive this application.

Further correspondence with respect to this matter should be addressed as follows:

By mail: Mail Stop Petition
Commissioner for Patents
P.O. Box 1450
Alexandria, VA 22313-1450

By fax: (703) 872-9306
ATTN: Office of Petitions

By hand: Customer Service Window
Randolph Building
401 Dulany Street
Alexandria, VA 22314

Telephone inquiries related to this decision should be directed to the undersigned at (571) 272-3219.

Nancy Johnson
Senior Petitions Attorney
Office of Petitions

UNITED STATES PATENT AND TRADEMARK OFFICE

COMMISSIONER FOR PATENTS
UNITED STATES PATENT AND TRADEMARK OFFICE
P.O. BOX 1450
ALEXANDRIA, VA 22313-1450
www.uspto.gov

Paper No.

Randall L. Reed
183 East King Road
Ithaca, NY 14850

COPY MAILED
AUG 1 4 2005
OFFICE OF PETITIONS

In re Application of :
Mohammed Shaikh : DECISION ON PETITION
Application No. 09/562,808 :
Filed: May 1, 2000 :
Attorney Docket No. 2035.300 :
:

This is a decision on the "Renewed Petition under 37 C.F.R. § 1.137(b)" filed August 1, 2005.

The petition is **GRANTED**.

The above-identified application became abandoned on January 13, 2005 for failure to timely pay the required issue fee within the statutory period of three (3) months from the mailing date, October 12, 2004, of the Notice of Allowance and Fee(s) Due. Applicant also failed to timely submit new drawings in response to the accompanying Notice of Allowability.

By decision mailed July 1, 2005, the initial petition filed June 3, 2005 was dismissed for failure to pay the full issue fee. Applicant had only submitted $685. Therein, it was noted that a deficiency of $65 was submitted. However, it is noted that the issue fee payment required is $700 not $750. Thus, to the extent that the previous decision stated that the deficiency was $65 the decision was in error. The deficiency was only $15.

On instant renewed petition, applicant submitted $65 to cure the fee deficiency. Applicant has now met the requirements for a grantable petition under § 1.137(b). The overpayment of $50 is being refunded under separate cover by the Office of Finance.

The Publishing Division has been advised of this decision. The application is thereby forwarded to the Publishing Division for processing into a patent.

Telephone inquiries related to this decision should be directed to the undersigned at (571) 272 3219.

Nancy Johnson
Senior Petitions Attorney
Office of Petitions

UNITED STATES PATENT AND TRADEMARK OFFICE

Commissioner for Patents
United States Patent and Trademark Office
P.O. Box 1450
Alexandria, VA 22313-1450
www.uspto.gov

In re Patent No. 6549639
Issue Date: April 15,2003
Application No. 09562842
Filed: May 1,2000
Attorney Docket No. GEN

:

:DECISION GRANTING PETITION
:UNDER 37 CFR 1.378(c)

:

This is a decision on the electronic petition, filed October 25,2007 ,under 37 CFR 1.378(c) to accept the unintentionally delayed payment of the 3.5 year maintenance fee for the above-identified patent.

The petition is GRANTED.

The maintenance fee is accepted, and the above-identified patent reinstated as of October 25,2007 . This decision also constitutes notice that the fee has been accepted. An electronic copy of the petition and this decision has been created as an entry in an Image File Wrapper. Nevertheless, petitioner should print and retain an independent copy

Telephone inquires related to this electronic decision should be directed to the Electronic Business Center at 1-866-217-9197.

Under the Paperwork Reduction Act of 1995, no persons are required to respond to a collection of information unless it displays valid OMB control number.

PETITION TO ACCEPT UNINTENTIONALLY DELAYED PAYMENT OF MAINTENANCE FEE IN AN EXPIRED PATENT (37 CFR 1.378(c))

Patent Number	Issue Date (YYYY-MM-DD)	Application Number	Filing Date (YYYY-MM-DD)	Docket Number (if applicable)
6549639	2003-04-15	09/562,842	2000-05-01	FOOTE-001

CAUTION: Maintenance fee (and surcharge, if any) payment must correctly identify: (1) the patent number and (2) the application number of the actual U.S. application leading to issuance of that patent to ensure the fee(s) is/are associated with the correct patent. 37 CFR 1.366(c) and (d).

SMALL ENTITY
☒ Patentee claims, or has previously claimed, small entity status. See 37 CFR 1.27.

LOSS OF ENTITLEMENT TO SMALL ENTITY STATUS
☐ Patentee is no longer entitled to small entity status. See 37 CFR 1.27(g)

NOT Small Entity		Small Entity	
Fee	Code	Fee	Code
○ 3 ½ year	(1551)	◉ 3 ½ year	(2551)
○ 7 ½ year	(1552)	○ 7 ½ year	(2552)
○ 11 ½ year	(1553)	○ 11 ½ year	(2553)

SURCHARGE
The surcharge required by 37 CFR 1.20(i)(2) (Fee Code 1558) must be paid as a condition of accepting unintentionally delayed payment of the maintenance fee.

MAINTENANCE FEE (37 CFR 1.20(e)-(g))
The appropriate maintenance fee must be submitted with this petition.

STATEMENT
THE UNDERSIGNED CERTIFIES THAT THE DELAY IN PAYMENT OF THE MAINTENANCE FEE TO THIS PATENT WAS UNINTENTIONAL

PETITIONER(S) REQUEST THAT THE DELAYED PAYMENT OF THE MAINTENANCE FEE BE ACCEPTED AND THE PATENT REINSTATED

THIS PORTION MUST BE COMPLETED BY THE SIGNATORY OR SIGNATORIES

37 CFR 1.378(d) states: "Any petition under this section must be signed by an attorney or agent registered to practice before the Patent and Trademark Office, or by the patentee, the assignee, or other party in interest."

I certify, in accordance with 37 CFR 1.4(d)(4) that I am

◉ An attorney or agent registered to practice before the Patent and Trademark Office

○ A sole patentee

○ A joint patentee; I certify that I am authorized to sign this submission on behalf of all the other patentees.

○ A joint patentee; all of whom are signing this e-petition

○ The assignee of record of the entire interest

Patent Practitioner			
A signature of the applicant or representative is required in accordance with 37 CFR 1.33 and 10.18. Please see 37 CFR 1.4(d) for the form of the signature			
Signature	/Michael Eisenberg/	Date (YYYY-MM-DD)	2007-10-25
Name	Michael Eisenberg Reg# 50,448	Registration Number	50448

This collection of information is required by 37 CFR 1.378(c). The information is required to obtain or retain a benefit by the public which is to file (and by the USPTO to process) an application. Confidentiality is governed by 35 U.S.C. 122 and 37 CFR 1.11 and 1.14. This collection is estimated to take 1 hour to complete, including gathering, preparing, and submitting the completed application form to the USPTO. Time will vary depending upon the individual case. Any comments on the amount of time you require to complete this form and/ or suggestions for reducing this burden, should be sent to the Chief Information Officer, U.S. Patent and Trademark Office, U.S. Department of Commerce, P.O. Box 1450, Alexandria, VA 22313-1450. DO NOT SEND FEES OR COMPLETED FORMS TO THIS ADDRESS. **This form can only be used when in conjunction with EFS-Web. If this form is mailed to the USPTO, it may cause delays in reinstating the patent.**

Privacy Act Statement

The Privacy Act of 1974 (P.L. 93-579) requires that you be given certain information in connection with your submission of the attached form related to a patent application or patent. Accordingly, pursuant to the requirements of the Act, please be advised that: (1) the general authority for the collection of this information is 35 U.S.C. 2(b)(2); (2) furnishing of the information solicited is voluntary; and (3) the principal purpose for which the information is used by the U.S. Patent and Trademark Office is to process and/or examine your submission related to a patent application or patent. If you do not furnish the requested information, the U.S. Patent and Trademark Office may not be able to process and/or examine your submission, which may result in termination of proceedings or abandonment of the application or expiration of the patent.

The information provided by you in this form will be subject to the following routine uses:

1. The information on this form will be treated confidentially to the extent allowed under the Freedom of Information Act (5 U.S.C. 552) and the Privacy Act (5 U.S.C. 552a). Records from this system of records may be disclosed to the Department of Justice to determine whether the Freedom of Information Act requires disclosure of these record s.

2. A record from this system of records may be disclosed, as a routine use, in the course of presenting evidence to a court, magistrate, or administrative tribunal, including disclosures to opposing counsel in the course of settlement negotiations.

3. A record in this system of records may be disclosed, as a routine use, to a Member of Congress submitting a request involving an individual, to whom the record pertains, when the individual has requested assistance from the Member with respect to the subject matter of the record.

4. A record in this system of records may be disclosed, as a routine use, to a contractor of the Agency having need for the information in order to perform a contract. Recipients of information shall be required to comply with the requirements of the Privacy Act of 1974, as amended, pursuant to 5 U.S.C. 552a(m).

5. A record related to an International Application filed under the Patent Cooperation Treaty in this system of records may be disclosed, as a routine use, to the International Bureau of the World Intellectual Property Organization, pursuant to the Patent Cooperation Treaty.

6. A record in this system of records may be disclosed, as a routine use, to another federal agency for purposes of National Security review (35 U.S.C. 181) and for review pursuant to the Atomic Energy Act (42 U.S.C. 218(c)).

7. A record from this system of records may be disclosed, as a routine use, to the Administrator, General Services, or his/her designee, during an inspection of records conducted by GSA as part of that agency's responsibility to recommend improvements in records management practices and programs, under authority of 44 U.S.C. 2904 and 2906. Such disclosure shall be made in accordance with the GSA regulations governing inspection of records for this purpose, and any other relevant (i.e., GSA or Commerce) directive. Such disclosure shall not be used to make determinations about individuals.

8. A record from this system of records may be disclosed, as a routine use, to the public after either publication of the application pursuant to 35 U.S.C. 122(b) or issuance of a patent pursuant to 35 U.S.C. 151. Further, a record may be disclosed, subject to the limitations of 37 CFR 1.14, as a routine use, to the public if the record was filed in an application which became abandoned or in which the proceedings were terminated and which application is referenced by either a published application, an application open to public inspections or an issued patent.

9. A record from this system of records may be disclosed, as a routine use, to a Federal, State, or local law enforcement agency, if the USPTO becomes aware of a violation or potential violation of law or regulation.

UNITED STATES PATENT AND TRADEMARK OFFICE

COMMISSIONER FOR PATENTS
UNITED STATES PATENT AND TRADEMARK OFFICE
P.O. BOX 1450
ALEXANDRIA, VA 22313-1450
www.uspto.gov

Paper No. 8

McGUIRE WOODS LLP
1750 TYSONS BOULEVARD, SUITE 1800
McLEAN, VA 22102-4215

COPY MAILED

APR 2 8 2004

OFFICE OF PETITIONS

In re Application of
Stephen J. Boies et al
Application No. 09/562,915
Filed: May 2, 2000
Attorney Docket No. YOR000189US1

: DECISION ON PETITION
: UNDER 37 CFR 1.183

This is a decision on the petition filed January 23, 2004, under 37 CFR 1.47(b), which is being treated as a petition under 37 CFR 1.183 to waive 37 CFR 1.131 to the extent that it requires that all of the named inventors execute the declaration filed thereunder.

The petition is granted to the extent *infra*.

Petitioner asserts that, while inventors Stephen J. Boies and Yiming Ye contributed to the conception of the claimed invention, which is under rejection, only inventor Boies has executed the declaration under 37 CFR 1.131 in support of establishing conception of the claimed invention prior to April 25, 2000. More particularly, while diligent efforts were expended in attempting to obtain the signature of inventor Ye (presumed to now be deceased) or his legal representatives, petitioner has been unsuccessful in his endeavors.

As noted in MPEP 715.04, an adequate showing may lead to acceptance of a declaration under 37 CFR 1.131 executed by less than all the named inventors of the claimed subject matter in question. Under the facts presented, it is agreed that justice requires waiver of the rules to the extent that they require Yiming Ye to declare. However, the favorable decision herein does not relieve applicant from his burden to establish that the invention was completed before the date of the reference and that the claimed invention was the product of the joint inventors. *See* In re Carlson, 79 F.2d 900, 27 USPQ 400 (CCPA 1935).

Telephone inquiries concerning this decision may be directed to Frances Hicks at (703) 305-8680.

This application is being forwarded to Technology Center AU 2157 for further examination on the merits.

Brian Hearn
Senior Petitions Examiner
Office of Petitions
Office of the Deputy Commissioner
for Patent Examination Policy

SPE RESPONSE FOR CERTIFICATE OF CORRECTION

Paper No.: X

DATE : October 24,2007

TO SPE OF : ART UNIT 2626

SUBJECT : Request for Certificate of Correction for Appl. No.: 09/562,932 Patent No.: 6975993 B1

A response is requested with respect to a request for a certificate of correction.

With respect to the change(s) requested to correct Office and/or Applicant's errors, should the patent read as shown in the certificate of correction attached herewith or the COCIN document(s), in IFW images for the above-identified patented application? No new matter should be introduced, nor should the scope or meaning of the claims be changed.

If the response is for an IFW, within 7 days, please complete and forward the response, to the employee (named below) via scanning into application images, using document code COCX.

DO NOT SENT TO ATTORNEY

If the response is for a paper file wrapper, please complete the response and forward the response with the paper file wrapper, to the employee (named below), within 7 days, to:

Certificates of Correction Branch (CofC)
South Tower - 9A22
Palm Location 7580

You can fax the Directors/SPE response to 571-270-9990

LAMONTE NEWSOME
Certificates of Correction Branch
703-308-9390 ext. 112

Thank You For Your Assistance

The request for issuing the above-identified correction(s) is hereby:
Note your decision on the appropriate box.

- ☑ **Approved** — **All** changes apply.
- ☐ **Approved in Part** — Specify below which changes **do not** apply.
- ☐ **Denied** — State the reasons for denial below.

Comments: Typo Correction

PATRICK N. EDWARDS
SUPERVISORY PATENT EXAMINER
SPE

2626
Art Unit

UNITED STATES PATENT AND TRADEMARK OFFICE

Commissioner for Patents
United States Patent and Trademark Office
P.O. Box 1450
Alexandria, VA 22313-1450
www.uspto.gov

SIM & MCBURNEY
330 UNIVERSITY AVENUE 6TH FLOOR
M5G 1R7
TORONTO ON CA CANADA

COPY MAILED

AUG 03 2009

OFFICE OF PETITIONS

In re Application of	:	
David J. Tulbert	:	
Application No. 09/562,987	:	DECISION ON PETITION
Filed: May 1, 2000	:	
Attorney Docket No. 9932-2	:	

This is a decision on the petition under the unintentional provisions of 37 CFR 1.137(b), filed June 16, 2009, to revive the above-identified application.

The petition is **GRANTED**.

The petition satisfies the conditions for revival pursuant to the provisions of 37 CFR 1.137(b) in that (1) the reply in the form of an amendment; (2) the petition fee; and (3) the required statement of unintentional delay have been received. Accordingly, the reply to the nonfinal rejection mailed November 17, 2009, is accepted as having been unintentionally delayed.

Telephone inquiries concerning this decision should be directed to the undersigned at (571) 272-3208.

This application is being referred to Technology Center AU 2629 for appropriate action by the Examiner in the normal course of business on the reply received June 16, 2009.

/KOC/
Karen Creasy
Petitions Examiner
Office of Petitions

UNITED STATES PATENT AND TRADEMARK OFFICE

COMMISSIONER FOR PATENTS
UNITED STATES PATENT AND TRADEMARK OFFICE
P.O. BOX 1450
ALEXANDRIA, VA 22313-1450
www.uspto.gov

MAILED

JUN 7 - 2005

DIRECTOR'S OFFICE
TECHNOLOGY CENTER 2600

Albert P Sharpe III Esq
Fay Sharpe Fagan Minnich & McKee LLP
7th Floor
1100 Superior Avenue
Cleveland OH 44114-2518

In re Application of
Todd R. Henderson, et al.
Application No. 09/563,029
Filed: May 1, 2000
For: **INCREASED TEMPORAL FLEXIBILITY WHEN PERFORMING/APPLYING/REVERTING CALIBRATION FOR A PRINTER OUTPUT DEVICE**

DECISION ON PETITION
TO WITHDRAW HOLDING OF
ABANDONMENT

This is a decision on the petition filed April 21, 2005, which is treated as Petition to Withdraw the Holding of Abandonment pursuant to 37 C.F.R. §1.181. No fee is required.

The petition is **GRANTED**.

The application was abandoned for failure to respond in a timely and effective manner to the non-final Office action mailed November 18, 2003. A Notice of Abandonment was mailed on April 12, 2005.

Petitioner asserts that a proper response was timely filed on February 18, 2004. In support of the petition, Petitioner has submitted, a copy of Applicant's reply (including an amendment and formal drawings) and a date-stamped post card receipt which evidences receipt of the amendment and three sheets of formal drawings within the United States Patent & Trademark Office on February 26, 2004.

The original correspondence filed was not matched with the application file and cannot be located. However, M.P.E.P. § 503 states, "[a] post card receipt which itemizes and properly identifies the papers which are being filed serves as *prima facie* evidence of receipt in the U.S.PTO of all the items listed thereon on the date stamped thereon by the PTO." Accordingly, it is concluded that the response was timely filed in the Patent and Trademark Office but not matched with the application file.

In view of the above stated reasons, the Notice of Abandonment is hereby vacated and the holding of abandonment withdrawn.

The application file will be forwarded to the Technology Center's technical support staff for entering the copy of the response submitted with the petition. From there, the file will be forwarded to the examiner for further examination in due course.

Krista Zele
Special Program Examiner
Technology Center 2600
Communications

PTO/SB/66 (03-09)
Approved for use through 03/31/2012. OMB 0651-0016
U.S. Patent and Trademark Office: U.S. DEPARTMENT OF COMMERCE
Under the Paperwork Reduction Act of 1995, no persons are required to respond to a collection of information unless it displays valid OMB control number.

PETITION TO ACCEPT UNINTENTIONALLY DELAYED PAYMENT OF MAINTENANCE FEE IN AN EXPIRED PATENT (37 CFR 1.378(c))

Patent Number	Issue Date (YYYY-MM-DD)	Application Number	Filing Date (YYYY-MM-DD)	Docket Number (if applicable)
6,354,933	2002-03-12	09/563,261	2000-05-01	5709-102 "US"

CAUTION: Maintenance fee (and surcharge, if any) payment must correctly identify: (1) the patent number and (2) the application number of the actual U.S. application leading to issuance of that patent to ensure the fee(s) is/are associated with the correct patent. 37 CFR 1.366(c) and (d).

SMALL ENTITY
☒ Patentee claims, or has previously claimed, small entity status. See 37 CFR 1.27.

LOSS OF ENTITLEMENT TO SMALL ENTITY STATUS
☐ Patentee is no longer entitled to small entity status. See 37 CFR 1.27(g)

NOT Small Entity		Small Entity	
Fee	Code	Fee	Code
○ 3 ½ year	(1551)	○ 3 ½ year	(2551)
○ 7 ½ year	(1552)	◉ 7 ½ year	(2552)
○ 11 ½ year	(1553)	○ 11 ½ year	(2553)

SURCHARGE
The surcharge required by 37 CFR 1.20(i)(2) (Fee Code 1558) must be paid as a condition of accepting unintentionally delayed payment of the maintenance fee.

MAINTENANCE FEE (37 CFR 1.20(e)-(g))
The appropriate maintenance fee must be submitted with this petition.

STATEMENT
THE UNDERSIGNED CERTIFIES THAT THE DELAY IN PAYMENT OF THE MAINTENANCE FEE TO THIS PATENT WAS UNINTENTIONAL

PETITIONER(S) REQUEST THAT THE DELAYED PAYMENT OF THE MAINTENANCE FEE BE ACCEPTED AND THE PATENT REINSTATED

THIS PORTION MUST BE COMPLETED BY THE SIGNATORY OR SIGNATORIES

37 CFR 1.378(d) states: "Any petition under this section must be signed by an attorney or agent registered to practice before the Patent and Trademark Office, or by the patentee, the assignee, or other party in interest."

I certify, in accordance with 37 CFR 1.4(d)(4) that I am

◉ An attorney or agent registered to practice before the Patent and Trademark Office

○ A sole patentee

○ A joint patentee; I certify that I am authorized to sign this submission on behalf of all the other patentees.

○ A joint patentee; all of whom are signing this e-petition

○ The assignee of record of the entire interest

Patent Practitioner			
A signature of the applicant or representative is required in accordance with 37 CFR 1.33 and 10.18. Please see 37 CFR 1.4(d) for the form of the signature			
Signature	/Jean-Claude Boudreau/	Date (YYYY-MM-DD)	2010-03-19
Name	Jean-Claude Boudreau	Registration Number	28818

This collection of information is required by 37 CFR 1.378(c). The information is required to obtain or retain a benefit by the public which is to file (and by the USPTO to process) an application. Confidentiality is governed by 35 U.S.C. 122 and 37 CFR 1.11 and 1.14. This collection is estimated to take 1 hour to complete, including gathering, preparing, and submitting the completed application form to the USPTO. Time will vary depending upon the individual case. Any comments on the amount of time you require to complete this form and/ or suggestions for reducing this burden, should be sent to the Chief Information Officer, U.S. Patent and Trademark Office, U.S. Department of Commerce, P.O. Box 1450, Alexandria, VA 22313-1450. DO NOT SEND FEES OR COMPLETED FORMS TO THIS ADDRESS. **This form can only be used when in conjunction with EFS-Web. If this form is mailed to the USPTO, it may cause delays in reinstating the patent.**

Privacy Act Statement

The Privacy Act of 1974 (P.L. 93-579) requires that you be given certain information in connection with your submission of the attached form related to a patent application or patent. Accordingly, pursuant to the requirements of the Act, please be advised that: (1) the general authority for the collection of this information is 35 U.S.C. 2(b)(2); (2) furnishing of the information solicited is voluntary; and (3) the principal purpose for which the information is used by the U.S. Patent and Trademark Office is to process and/or examine your submission related to a patent application or patent. If you do not furnish the requested information, the U.S. Patent and Trademark Office may not be able to process and/or examine your submission, which may result in termination of proceedings or abandonment of the application or expiration of the patent.

The information provided by you in this form will be subject to the following routine uses:

1. The information on this form will be treated confidentially to the extent allowed under the Freedom of Information Act (5 U.S.C. 552) and the Privacy Act (5 U.S.C. 552a). Records from this system of records may be disclosed to the Department of Justice to determine whether the Freedom of Information Act requires disclosure of these records.

2. A record from this system of records may be disclosed, as a routine use, in the course of presenting evidence to a court, magistrate, or administrative tribunal, including disclosures to opposing counsel in the course of settlement negotiations.

3. A record in this system of records may be disclosed, as a routine use, to a Member of Congress submitting a request involving an individual, to whom the record pertains, when the individual has requested assistance from the Member with respect to the subject matter of the record.

4. A record in this system of records may be disclosed, as a routine use, to a contractor of the Agency having need for the information in order to perform a contract. Recipients of information shall be required to comply with the requirements of the Privacy Act of 1974, as amended, pursuant to 5 U.S.C. 552a(m).

5. A record related to an International Application filed under the Patent Cooperation Treaty in this system of records may be disclosed, as a routine use, to the International Bureau of the World Intellectual Property Organization, pursuant to the Patent Cooperation Treaty.

6. A record in this system of records may be disclosed, as a routine use, to another federal agency for purposes of National Security review (35 U.S.C. 181) and for review pursuant to the Atomic Energy Act (42 U.S.C. 218(c)).

7. A record from this system of records may be disclosed, as a routine use, to the Administrator, General Services, or his/her designee, during an inspection of records conducted by GSA as part of that agency's responsibility to recommend improvements in records management practices and programs, under authority of 44 U.S.C. 2904 and 2906. Such disclosure shall be made in accordance with the GSA regulations governing inspection of records for this purpose, and any other relevant (i.e., GSA or Commerce) directive. Such disclosure shall not be used to make determinations about individuals.

8. A record from this system of records may be disclosed, as a routine use, to the public after either publication of the application pursuant to 35 U.S.C. 122(b) or issuance of a patent pursuant to 35 U.S.C. 151. Further, a record may be disclosed, subject to the limitations of 37 CFR 1.14, as a routine use, to the public if the record was filed in an application which became abandoned or in which the proceedings were terminated and which application is referenced by either a published application, an application open to public inspections or an issued patent.

9. A record from this system of records may be disclosed, as a routine use, to a Federal, State, or local law enforcement agency, if the USPTO becomes aware of a violation or potential violation of law or regulation.

UNITED STATES PATENT AND TRADEMARK OFFICE

Commissioner for Patents
United States Patent and Trademark Office
P.O. Box 1450
Alexandria, VA 22313-1450
www.uspto.gov

In re Patent No. 6354933
Issue Date: March 12,2002
Application No. 09563261
Filed: May 1,2000
Attorney Docket No. 5709-102"US"

:
:DECISION GRANTING PETITION
:UNDER 37 CFR 1.378(c)
:

This is a decision on the electronic petition, filed March 19,2010 ,under 37 CFR 1.378(c) to accept the unintentionally delayed payment of the 7.5 year maintenance fee for the above-identified patent.

The petition is **GRANTED**.

The maintenance fee is accepted, and the above-identified patent reinstated as of March 19,2010 .
This decision also constitutes notice that the fee has been accepted. An electronic copy of the petition and this decision has been created as an entry in the Image File Wrapper. Nevertheless, petitioner should print and retain an independent copy.

Telephone inquiries related to this electronic decision should be directed to the Electronic Business Center at 1-866-217-9197.

UNITED STATES PATENT AND TRADEMARK OFFICE

Commissioner for Patents
United States Patent and Trademark Office
P.O. Box 1450
Alexandria, VA 22313-1450
www.uspto.gov

In re Patent No. 6808455
Issue Date: October 26,2004
Application No. 09563330
Filed: May 3,2000
Attorney Docket No. 0276AD-26641

:
:DECISION GRANTING PETITION
:UNDER 37 CFR 1.378(c)
:

This is a decision on the electronic petition, filed April 22,2009 ,under 37 CFR 1.378(c) to accept the unintentionally delayed payment of the 3.5 year maintenance fee for the above-identified patent.

The petition is **GRANTED**.

The maintenance fee is accepted, and the above-identified patent reinstated as of April 22,2009 .
This decision also constitutes notice that the fee has been accepted. An electronic copy of the petition and this decision has been created as an entry in the Image File Wrapper. Nevertheless, petitioner should print and retain an independent copy.

Telephone inquiries related to this electronic decision should be directed to the Electronic Business Center at 1-866-217-9197.

PTO/SB/66 (03-09)
Approved for use through 03/31/2012. OMB 0651-0016
U.S. Patent and Trademark Office: U.S. DEPARTMENT OF COMMERCE
Under the Paperwork Reduction Act of 1995, no persons are required to respond to a collection of information unless it displays valid OMB control number.

PETITION TO ACCEPT UNINTENTIONALLY DELAYED PAYMENT OF MAINTENANCE FEE IN AN EXPIRED PATENT (37 CFR 1.378(c))

Patent Number	Issue Date (YYYY-MM-DD)	Application Number	Filing Date (YYYY-MM-DD)	Docket Number (if applicable)
6808455	2004-10-26	09/563,330	2000-05-03	PDHO004

CAUTION: Maintenance fee (and surcharge, if any) payment must correctly identify: (1) the patent number and (2) the application number of the actual U.S. application leading to issuance of that patent to ensure the fee(s) is/are associated with the correct patent. 37 CFR 1.366(c) and (d).

SMALL ENTITY
☒ Patentee claims, or has previously claimed, small entity status. See 37 CFR 1.27.

LOSS OF ENTITLEMENT TO SMALL ENTITY STATUS
☐ Patentee is no longer entitled to small entity status. See 37 CFR 1.27(g)

NOT Small Entity		Small Entity	
Fee	Code	Fee	Code
○ 3 ½ year	(1551)	◉ 3 ½ year	(2551)
○ 7 ½ year	(1552)	○ 7 ½ year	(2552)
○ 11 ½ year	(1553)	○ 11 ½ year	(2553)

SURCHARGE
The surcharge required by 37 CFR 1.20(i)(2) (Fee Code 1558) must be paid as a condition of accepting unintentionally delayed payment of the maintenance fee.

MAINTENANCE FEE (37 CFR 1.20(e)-(g))
The appropriate maintenance fee must be submitted with this petition.

STATEMENT
THE UNDERSIGNED CERTIFIES THAT THE DELAY IN PAYMENT OF THE MAINTENANCE FEE TO THIS PATENT WAS UNINTENTIONAL

PETITIONER(S) REQUEST THAT THE DELAYED PAYMENT OF THE MAINTENANCE FEE BE ACCEPTED AND THE PATENT REINSTATED

THIS PORTION MUST BE COMPLETED BY THE SIGNATORY OR SIGNATORIES

37 CFR 1.378(d) states: "Any petition under this section must be signed by an attorney or agent registered to practice before the Patent and Trademark Office, or by the patentee, the assignee, or other party in interest."

I certify, in accordance with 37 CFR 1.4(d)(4) that I am

◉ An attorney or agent registered to practice before the Patent and Trademark Office

○ A sole patentee

○ A joint patentee; I certify that I am authorized to sign this submission on behalf of all the other patentees.

○ A joint patentee; all of whom are signing this e-petition

○ The assignee of record of the entire interest

Patent Practitioner			
A signature of the applicant or representative is required in accordance with 37 CFR 1.33 and 10.18. Please see 37 CFR 1.4(d) for the form of the signature			
Signature	/mark a. oathout/	Date (YYYY-MM-DD)	2009-04-22
Name	Mark A. Oathout	Registration Number	33747

This collection of information is required by 37 CFR 1.378(c). The information is required to obtain or retain a benefit by the public which is to file (and by the USPTO to process) an application. Confidentiality is governed by 35 U.S.C. 122 and 37 CFR 1.11 and 1.14. This collection is estimated to take 1 hour to complete, including gathering, preparing, and submitting the completed application form to the USPTO. Time will vary depending upon the individual case. Any comments on the amount of time you require to complete this form and/ or suggestions for reducing this burden, should be sent to the Chief Information Officer, U.S. Patent and Trademark Office, U.S. Department of Commerce, P.O. Box 1450, Alexandria, VA 22313-1450. DO NOT SEND FEES OR COMPLETED FORMS TO THIS ADDRESS. **This form can only be used when in conjunction with EFS-Web. If this form is mailed to the USPTO, it may cause delays in reinstating the patent.**

Privacy Act Statement

The Privacy Act of 1974 (P.L. 93-579) requires that you be given certain information in connection with your submission of the attached form related to a patent application or patent. Accordingly, pursuant to the requirements of the Act, please be advised that: (1) the general authority for the collection of this information is 35 U.S.C. 2(b)(2); (2) furnishing of the information solicited is voluntary; and (3) the principal purpose for which the information is used by the U.S. Patent and Trademark Office is to process and/or examine your submission related to a patent application or patent. If you do not furnish the requested information, the U.S. Patent and Trademark Office may not be able to process and/or examine your submission, which may result in termination of proceedings or abandonment of the application or expiration of the patent.

The information provided by you in this form will be subject to the following routine uses:

1. The information on this form will be treated confidentially to the extent allowed under the Freedom of Information Act (5 U.S.C. 552) and the Privacy Act (5 U.S.C. 552a). Records from this system of records may be disclosed to the Department of Justice to determine whether the Freedom of Information Act requires disclosure of these records.

2. A record from this system of records may be disclosed, as a routine use, in the course of presenting evidence to a court, magistrate, or administrative tribunal, including disclosures to opposing counsel in the course of settlement negotiations.

3. A record in this system of records may be disclosed, as a routine use, to a Member of Congress submitting a request involving an individual, to whom the record pertains, when the individual has requested assistance from the Member with respect to the subject matter of the record.

4. A record in this system of records may be disclosed, as a routine use, to a contractor of the Agency having need for the information in order to perform a contract. Recipients of information shall be required to comply with the requirements of the Privacy Act of 1974, as amended, pursuant to 5 U.S.C. 552a(m).

5. A record related to an International Application filed under the Patent Cooperation Treaty in this system of records may be disclosed, as a routine use, to the International Bureau of the World Intellectual Property Organization, pursuant to the Patent Cooperation Treaty.

6. A record in this system of records may be disclosed, as a routine use, to another federal agency for purposes of National Security review (35 U.S.C. 181) and for review pursuant to the Atomic Energy Act (42 U.S.C. 218(c)).

7. A record from this system of records may be disclosed, as a routine use, to the Administrator, General Services, or his/her designee, during an inspection of records conducted by GSA as part of that agency's responsibility to recommend improvements in records management practices and programs, under authority of 44 U.S.C. 2904 and 2906. Such disclosure shall be made in accordance with the GSA regulations governing inspection of records for this purpose, and any other relevant (i.e., GSA or Commerce) directive. Such disclosure shall not be used to make determinations about individuals.

8. A record from this system of records may be disclosed, as a routine use, to the public after either publication of the application pursuant to 35 U.S.C. 122(b) or issuance of a patent pursuant to 35 U.S.C. 151. Further, a record may be disclosed, subject to the limitations of 37 CFR 1.14, as a routine use, to the public if the record was filed in an application which became abandoned or in which the proceedings were terminated and which application is referenced by either a published application, an application open to public inspections or an issued patent.

9. A record from this system of records may be disclosed, as a routine use, to a Federal, State, or local law enforcement agency, if the USPTO becomes aware of a violation or potential violation of law or regulation.

UNITED STATES PATENT AND TRADEMARK OFFICE

COMMISSIONER FOR PATENTS
UNITED STATES PATENT AND TRADEMARK OFFICE
WASHINGTON, DC 20231
www.uspto.gov

MAILED

OCT 01 2001

DIRECTOR'S OFFICE
TECHNOLOGY CENTER 2100

Paper No. 12

OSTROLENK FABER GERB & SOFFEN
1180 AVENUE OF THE AMERICAS
NEW YORK , NY 10036-8403

In re Application of: M. Togher et al.
Application No.: 09/563,461
Filed: May 2, 2000
For: CREDIT MANAGEMENT FOR ELECTRONIC BROKERAGE SYSTEM

DECISION ON PETITION TO MAKE SPECIAL

This is a decision on the petition filed August 29, 2001 under 37 C.F.R. §102(d) and M.P.E.P. § 708.02(II): Infringement, to make the above-identified application special.

A grantable petition under 37 C.F.R. §1.102(d), and M.P.E.P. §708.02, Section II, must be accompanied by payment of the fee under 37 C.F.R. §1.17(i) and a statement under 37 C.F.R. §1.102 by the applicant or assignee or statements by an attorney/agent registered to practice before the Patent and Trademark Office that: (A) there is an infringing device or product actually on the market or method in use; (B) a rigid comparison of the alleged infringing device, product, or method with the claims of the application has been made, and that, in his or her opinion, some of the claims are unquestionably infringed; and (C) he or she has made or caused to be made a careful and thorough search of the prior art or has a good knowledge of the prior art. A fee under 37 C.F.R. for such a petition is required. Finally, applicant must provide one copy of each of the references deemed most closely related to the subject matter encompassed by the claims if said references are not already of record.

The petition does not meet the requirements for special status in that it does not include a clear statement that at least some of the claims are "unquestionably" infringed. The supporting statement filed with the petition indicates that the basis for the opinion that some of the claims are infringed includes "press releases, website information and other material", "publications by others" and "in large part" an International Patent Publication. The supporting statement goes on to assert that the patent publication describes the product and method because of a similarity of functions, the timing of the publication and the lack of other patent documents by the party marketing the system. Considering that the association between the patent publication and the product marketed and method used is not clearly defined and considering the possibly non-technical nature of the other sources of information, it cannot be assumed by the Office that petitioner's statement is equivalent to an assertion of an opinion of "unquestionable" infringement.

Accordingly, the petition is **DENIED**.

Should applicant desire reconsideration, he/she should supplement this petition by a declaration or statement giving the information as outlined above. Any request for reconsideration must be filed within TWO MONTHS of the date of this decision.

Robert A. Weinhardt
Special Program Examiner
Technology Center 2100
Computer Architecture, Software, & Electronic Commerce
703 305 9780

UNITED STATES PATENT AND TRADEMARK OFFICE

COMMISSIONER FOR PATENTS
UNITED STATES PATENT AND TRADEMARK OFFICE
WASHINGTON, D.C. 20231
www.uspto.gov

Paper No. 8

Darby & Darby P.C.
Post Office Box 5257
New York, NY 10150-5257

COPY MAILED
AUG 2 0 2002
OFFICE OF PETITIONS

In re Application of
Kiyotaka Tsuji, et al.
Application No. 09/563,479
Filed: May 2, 2000
Attorney Docket No. M2048-5

ON PETITION

This is a decision on the petition under 37 CFR 1.137(b), filed on June 12, 2002, to revive the above-identified application.

The petition is **GRANTED**.

The above-identified application became abandoned for failure to reply in a timely manner to the non-final Office action mailed June 5, 2001, which set a shortened statutory period for reply of three(3) months. No extensions of time under the provisions of 37 CFR 1.136(a) were obtained. Accordingly, the above-identified application became abandoned on September 6, 2001.

The file does not indicate a change of address has been submitted, although the address given on the petition differs from the address of record. If appropriate, a change of address should be filed in accordance with MPEP 601.03. A courtesy copy of this decision is being mailed to the address given on the petition; however, the Office will mail all future correspondence solely to the address of record.

Telephone inquiries concerning this decision should be directed to Cheryl Gibson-Baylor at (703)308-5111, or in her absence, Sherry Brinkley at (703)305-9220.

The application file is being forwarded to Technology Center 1700, Art Unit 1741.

Cheryl Gibson Baylor

Cheryl Gibson-Baylor
Petitions Examiner
Office of Petitions
Office of the Deputy Commissioner
for Patent Examination Policy

Sherry Brinkley

Sherry Brinkley
Petitions Examiner

cc: Tom Morrison
Darby & Darby
805 Third Avenue
New York, NY 10022-7513

UNITED STATES PATENT AND TRADEMARK OFFICE

Commissioner for Patents
United States Patent and Trademark Office
P.O. Box 1450
Alexandria, VA 22313-1450
www.uspto.gov

AT&T CORP.
P.O. BOX 4110
MIDDLETOWN, NJ 07748

COPY MAILED

FEB 21 2006

OFFICE OF PETITIONS

In re Application of :
James David Johnston :
Application No. 09/563,551 : ON PETITION
Filed: May 3, 2000 :
Attorney Docket No. 1999-106 :

This is a decision on the petition under 37 CFR 1.137(b), filed August 25, 2005, to revive the above-identified application.

The petition is **GRANTED.**

The above-identified application became abandoned for failure to submit the Issue fee in a timely manner in reply to the Notice of Allowance mailed May 18, 2005, which set a statutory period for reply of three (3) months. Accordingly, the above-identified application became abandoned on August 19, 2005.

The petition satisfies the conditions for revival pursuant to the provisions of 37 CFR 1.137(b) in that (1) the reply in the form of payment of the issue fee; (2) the petition fee; and (3) the required statement of unintentional delay have been received. Accordingly, the issue fee is accepted as having been unintentionally delayed.

Telephone inquiries concerning this decision should be directed to the undersigned at (571) 272-3210.

This matter is being referred to the Publishing Division for further processing.

Irvin Dingle
Petitions Examiner
Office of Petitions

cc: AT&T Corp.
Room 2A-207
One AT&T Way
Bedminster, NJ 07921

cc: Henry T. Brendzel
P.O. Box 574
Springfield, N.J. 07081

UNITED STATES PATENT AND TRADEMARK OFFICE

COMMISSIONER FOR PATENTS
UNITED STATES PATENT AND TRADEMARK OFFICE
WASHINGTON, D.C. 20231
www.uspto.gov

Paper No. 3

Michael Hetherington
120 Langley Hill Rd.
P.O. Box 620839
Woodside, CA 94062

MAILED

OCT 0 8 2002

Technology Center 2100

In re Application of:	)	
Walt Froloff	)	
Application No. 09/563,624	)	
Filed: May 2, 2000	)	
For: SYSTEM AND METHOD FOR EMBEDMENT OF EMOTIVE CONTENT IN MODERN TEXT PROCESSING, PUBLISHING AND COMMUNICATION	)	**DECISION ON REQUEST FOR WITHDRAWAL AS ATTORNEY**

This is a decision on the Request To Withdraw from Representation filed September 17, 2002.

A grantable request to withdraw as attorney of record should indicate thereon the present mailing addresses of the attorney(s) who is/are withdrawing from the record and of the applicant. The request for withdrawal must be signed by every attorney seeking to withdraw or contain a clear indication that one attorney is signing on behalf of another/others. A request to withdraw will not be approved unless at least 30 (thirty) days would remain between the date of approval and the later of the expiration date of a time to file a response or the expiration date of the maximum time period which can be extended under 37 C.F.R. § 1. 136(a). The effective date of withdrawal being the date of decision and not the date of request. See M.P.E.P. § 402.06. **37 C.F.R. § 1.36 further requires that the applicant or patent owner be notified of the withdrawal of the attorney or agent**.

There is no indication that Applicant has been notified of the request for withdrawal. Accordingly, the request is **DENIED**.

All future communications from the United States Patent and Trademark Office (Office) will continue to be directed to the above-listed address until otherwise notified by applicant. Applicant is reminded of the obligation to promptly notify the Office of any change in correspondence address to ensure receipt of all communications from the Office.

For Vincent N. Trans
Special Programs Examiner
Technology Center 2100
Computer Architecture and Software
(703) 305-9750

UNITED STATES PATENT AND TRADEMARK OFFICE

COMMISSIONER FOR PATENTS
UNITED STATES PATENT AND TRADEMARK OFFICE
WASHINGTON, D.C. 20231
www.uspto.gov

Paper No. 5

Michael Hetherington
120 Langley Hill Rd.
P.O. Box 620839
Woodside, CA 94062

MAILED

NOV 1 2 2002

Technology Center 2100

In re Application of: Walt Froloff	)	
Application No. 09/563,624	)	
Filed: May 2, 2000	)	
For: SYSTEM AND METHOD FOR EMBEDMENT OF EMOTIVE CONTENT IN MODERN TEXT PROCESSING, PUBLISHING AND COMMUNICATION	)	**DECISION ON REQUEST FOR WITHDRAWAL AS ATTORNEY**

This is a decision on the Request To Withdraw from Representation filed October 21, 2002.

A grantable request to withdraw as attorney of record should indicate thereon the present mailing addresses of the attorney(s) who is/are withdrawing from the record and of the applicant. The request for withdrawal must be signed by every attorney seeking to withdraw or contain a clear indication that one attorney is signing on behalf of another/others. A request to withdraw will not be approved unless at least 30 (thirty) days would remain between the date of approval and the later of the expiration date of a time to file a response or the expiration date of the maximum time period which can be extended under 37 C.F.R. § 1. 136(a). The effective date of withdrawal being the date of decision and not the date of request. See M.P.E.P. § 402.06. 37 C.F.R. § 1.36 further requires that the applicant or patent owner be notified of the withdrawal of the attorney or agent.

The request is **GRANTED**.

All future communications from the Office will be directed to the below-listed address until otherwise notified by applicant. This correspondence address is provided by the withdrawn attorney(s). Applicant is reminded of the obligation to promptly notify the Patent and Trademark Office (Office) of any change in correspondence address to ensure receipt of all communications from the Office.

For Vincent N. Trans
Special Programs Examiner
Technology Center 2100
Computer Architecture and Software
(703) 305-9750

cc: Walt Froloff
273 D Searidge Road
Aptos, CA 95003

UNITED STATES PATENT AND TRADEMARK OFFICE

COMMISSIONER FOR PATENTS
UNITED STATES PATENT AND TRADEMARK OFFICE
P.O. BOX 1450
ALEXANDRIA, VA 22313-1450
www.uspto.gov

MAILED

FEB 04 2004

Technology Center 2100

Paper No. 8

Walt Froloff
273 D Searidge Road
Aptos, CA 95003

In re Application of: Froloff	)	
Application No.: 09/563,624	)	
Filed: May 2, 2000	)	**DECISION GRANTING PETITION**
Attorney Docket No.: *Pro Se*	)	**TO ACCEPT CORRESPONDENCE AS**
For: SYSTEM AND METHOD FOR	)	**TIMELY FILED UNDER 37 CFR §1.8**
EMBEDMENT OF EMOTIVE CONTENT IN	)	
MODERN TEXT PROCESSING, PUBLISHING	)	
AND COMMUNICATION	)	

This decision is in response to the petition for withdrawal of holding of abandonment of this application filed on November 17, 2003. The request is being considered a petition to accept papers as timely filed under 37 CFR §1.8. While no notice of abandonment has been mailed, the application is abandoned by operation of law for failure to receive a response to the Office action that was mailed February 12, 2003 (Paper No. 6).

In support of the petition, petitioner has provided a statement as to the events surrounding the applicant's filing by fax a response to the Office action; a copy of the Auto-Reply receipt with a date of March 3, 2003 for 11 pages; a confirmation of transmission for 11 pages; and a copy of the applicant's response.

An Auto-Reply receipt serves as *prima facie* evidence of receipt in the USPTO. The evidence provided establishes that a timely response was, in fact, filed on March 3, 2003. The Office failed to timely match the response to the application file.

The petition is **GRANTED**. The application was not abandoned, in fact. The Office regrets any inconvenience caused by this error.

The application file is being forwarded to the Technology Center's Technical Support Staff for processing of the applicant's response.

Josie A. Ballato
Special Programs Examiner
Technology Center 2100
Computer Architecture, Software, and Information Security
(703) 308-0269

UNITED STATES PATENT AND TRADEMARK OFFICE

COMMISSIONER FOR PATENTS
UNITED STATES PATENT AND TRADEMARK OFFICE
P.O. BOX 1450
ALEXANDRIA, VA 22313-1450
www.uspto.gov

MAILED

NOV 0 9 2005

TECHNOLOGY CENTER 2100

Walt Froloff
273 D Searidge Road
Aptos, CA 95003

In re Application of: Froloff
Application No. 09/563,624
Attorney Docket No. LXD-1
Filed: May 2, 2000
For: SYSTEM AND METHOD FOR EMBEDMENT OF EMOTIVE CONTENT IN MODERN TEXT PROCESSING, PUBLISHING AND COMMUNICATION

DECISION ON PETITION TO WITHDRAW HOLDING OF ABANDONMENT UNDER 37 CFR §1.181

This is a decision on the petition, filed August 24, 2005, requesting the Withdrawal of the Holding of Abandonment of the above-identified application, under 37 CFR §1.181. The instant application was effectively held abandoned for failure to timely pay the issue fee due in response to the Notice of Allowance and Fee(s) Due (PTOL-85) mailed January 24, 2005. The three-month statutory period for response expired on April 24, 2005. A notice of abandonment was mailed on August 16, 2005.

According to the MPEP §711.03(c), the showing required to establish non-receipt of an Office action includes the following:

1) a statement from practitioner that the Office action was not received,
2) a statement from practitioner that the file jacket and docket records were searched,
3) a copy of the docket record at the address of record, and
4) a reference to the docket record in the practitioner's statement.

In a phone conversation with Applicant in August 2005, Applicant revealed that he in fact handles the mail at the address of record and that although the Notice of Allowability, mailed January 24, 2005 was received, the Notice of Allowance and Issue Fee(s) Due was not received.

In support of the petition, Applicant provides a statement that the Notice of Allowance and Fee(s) Due was not received and that although a formalized docket record is not kept by the Applicant with respect to the instant application, a search of the files has been performed and referenced by a statement from Applicant. In lieu of a copy of a formalized docket record, a copy of the status inquiries made to the Office regarding when the Notice of Allowance and Issue Fee(s) due would be mailed to Applicant, has been provided from the Applicant's email address.

In accordance with the telephone conversation and evidence provided, Petitioner has established non-receipt of the Office action according to the requirements set forth above. Accordingly, the petition is **GRANTED**.

The application is being forwarded to the Supervisory Legal Instruments Examiner with instructions to **WITHDRAW the holding of abandonment**, before redating and remailing the Notice of Allowance and Issue Fees Due to the applicant.

Brian L. Johnson
Special Programs Examiner
Technology Center 2100
Computer Architecture, Software, and Information Security

SPE RESPONSE FOR CERTIFICATE OF CORRECTION

Paper No.: 9

DATE : 1-20-06

TO SPE OF : ART UNIT 1616

SUBJECT : Request for Certificate of Correction on Patent No.: 6,471,961

A response is requested with respect to the accompanying request for a certificate of correction.

Please complete this form and return with file, within 7 days to:
Certificates of Correction Branch ~~PK 3-922~~ South T/ 9A20
Palm location **7580** - Tel. No. 305-8309

With respect to the change(s) requested, correcting Office and/or Applicant's errors, should the patent read as shown in the certificate of correction? No new matter should be introduced, nor should the scope or meaning of the claims be changed.

Please check Related U.S. Applications

E Young

Thank You For Your Assistance

Certificates of Correction Branch

The request for issuing the above-identified correction(s) is hereby:

Note your decision on the appropriate box.

- (●) **Approved** — **All** changes apply.
- ☐ **Approved in Part** — Specify below which changes **do not** apply.
- ☐ **Denied** — State the reasons for denial below.

Comments:

CHRISTOPHER S. F. LOW
SUPERVISORY PATENT EXAMINER
TECHNOLOGY CENTER 1600

Christopher S. F. Low
SPE

1614
Art Unit

UNITED STATES PATENT AND TRADEMARK OFFICE

Commissioner for Patents
United States Patent and Trademark Office
P.O. Box 1450
Alexandria, VA 22313-1450
www.uspto.gov

Paper No.

TOLER LARSON & ABEL LLP
5000 PLAZA ON THE LAKE
#265
AUSTIN, TX 78746

COPY MAILED

FEB 14 2005

OFFICE OF PETITIONS

In re Patent No. 6,155,906 Amanda May Issue Date: December 5, 2000 Application No. 09/563,708 Filed: May 2, 2000 Title: GARMENTS AND GARMENT ACCESSORIES HAVING DISTINCT INTERCHANGEABLE STRAPS	:	DECISION ON PETITION

This is a decision on the Petition under 37 CFR § 1.378(c), filed January 10, 2005, to accept the unintentionally delayed payment of a maintenance fee for the above-identified patent.

The petition is **GRANTED**.

The patent issued December 5, 2000. The grace period for paying the 3 ½ year maintenance fee provided in 37 CFR 1.362(e) expired at midnight on December 5, 2004, with no payment received.

Within twenty-four months after the expiration of the six-month grace period, a registered patent practitioner filed the instant petition. The petition included the required maintenance fee, the surcharge for accepting an unintentionally delayed maintenance fee after expiration, and a statement that the delay in payment of the maintenance fee was unintentional. The petition includes a statement that patentee is no longer entitled to small entity status.

It is not apparent whether the person signing the statement of unintentional delay was in a position to have firsthand or direct knowledge of the facts and circumstances of the delay at issue. Nevertheless, such statement is being treated as having been made

as the result of a reasonable inquiry into the facts and circumstances of such delay. See 37 CFR 10.18(b); cf. Changes to Patent Practice and Procedure; Final Rule Notice, 62 Fed. Reg. 53131, 53178 (October 10, 1997), 1203 Off. Gaz. Pat. Office 63, 103 (October 21, 1997). In the event that such an inquiry has not been made, petitioner must make such an inquiry. If such inquiry results in the discovery that the delay in paying the maintenance fee under 37 CFR 1.378(c) was intentional, petitioner must notify the Office.

Accordingly, the maintenance fee in this case is hereby accepted and the above-identified patent is hereby reinstated as of the mail date of this decision.

It is noted that the address listed on the petition differs from the correspondence address of record. This decision is being mailed to the address on the petition as a one-time courtesy. If petitioner desires to receive future correspondence regarding any Maintenance Fee Reminder which may be mailed concerning this patent at the address on the petition, a "Fee Address" Indication Form or Change of Correspondence Address - Patent should be submitted to Maintenance Fee Division.

This file is being returned to Files Repository.

Telephone inquiries related to this decision may be directed to the undersigned at (571) 272-3219.

Nancy Johnson
Senior Petitions Attorney
Office of Petitions

UNITED STATES PATENT AND TRADEMARK OFFICE

Commissioner for Patents
United States Patent and Trademark Office
P.O. Box 1450
Alexandria, VA 22313-1450
www.uspto.gov

APR 19 2005

Christopher Hilberg
Oppenheimer Wolff & Donnelly, LLP
45 South Seventh St.
Plaza VII, Suite 3300
Minneapolis, MN 55402-1609

In re Application of:	:	
David A. Yelich et al	:	
Application No. 09/563,757	:	PETITION TO REVIEW
Filed: May 1, 2000	:	RESTRICTION UNDER
Attorney Docket No.: 060021-358901	:	37 C.F.R. 1.144
For: MANUFACTURE FOR A MARKET	:	
MANAGEMENT FRAMEWORK	:	

This is in response to applicants' petition filed on December 15, 2004 to set aside the examiner's Restriction requirement dated May 20, 2004.

The petition is **GRANTED**.

The petitioner argues that in the instant application the Restriction requirement dated May 20, 1004 failed to identify the specific species. Further, petitioner argues that claims 16-67 added by the March 1, 2004 amendment were not in fact directed to different species but only further limited the invention already claimed

A review of the file history indicates that the examiner's Office action dated May 20, 2004 did in fact contain an election of species by prior presentation but failed to identify any specifics about the various species. Further, in looking at claims 16-67 submitted with the March 1, 2004 amendment it is clear that these claims only add additional limitations and are not directed to another species.

Accordingly, the petition is granted and the application will be promptly forwarded to the examiner for the preparation of a new Office action on all of the claims pending in the application.

John J. Love, Director
Patent Technology Center 3600
(571) 272-5250
RPO: 03/03/05

UNITED STATES PATENT AND TRADEMARK OFFICE

Commissioner for Patents
United States Patent and Trademark Office
P.O. Box 1450
Alexandria, VA 22313-1450
www.uspto.gov

BACHMAN & LAPOINTE PC
900 CHAPEL STREET
SUITE 1201
NEW HAVEN, CT 06510-2802

COPY MAILED

JAN 27 2006

OFFICE OF PETITIONS

In re Application of	:	
Mark E. Lane	:	
Application No. 09/563,772	:	ON PETITION
Filed: May 2, 2000	:	
Attorney Docket No. 00-256	:	

This is a decision on the petition under 37 CFR 1.137(b), filed November 17, 2005, to revive the above-identified application.

The petition is **GRANTED**.

The above-identified application became abandoned for failure to reply in a timely manner to the non-final Office action mailed August 13, 2004, which set a shortened statutory period for reply of three (3) months. No extensions of time under the provisions of 37 CFR 1.136(a) were obtained. Accordingly, the above-identified application became abandoned on November 14, 2004.

The petition satisfies the conditions for revival pursuant to the provisions of 37 CFR 1.137(b) in that (1) the reply in the form of an amendment; (2) the petition fee; and (3) the required statement of unintentionally delay have been received. Accordingly, the reply to the non-final Office action of August 13, 2004 is accepted as having been unintentionally delayed.

A review of the official file history indicates that a Notice of Allowance and Fee(s) Due and Notice of Allowability were mailed on January 9, 2006. Accordingly, all actions taken by the Examiner after the filing of the petition to revive and the amendment of November 17, 2005 are hereby ratified.

This matter is being referred to Publishing Division to await applicant's reply to the Notice of Allowance and Fee(s) Due mailed January 9, 2006.

Telephone inquiries concerning this decision should be directed to Wan Laymon at (571) 272-3220.

Wan Laymon

Wan Laymon
Petitions Examiner
Office of Petitions

UNITED STATES PATENT AND TRADEMARK OFFICE

Commissioner for Patents
United States Patent and Trademark Office
P.O. Box 1450
Alexandria, VA 22313-1450
www.uspto.gov

FISH & RICHARDSON PC
P O BOX 1022
MINNEAPOLIS, MN 55440-1022

COPY MAILED

DEC 01 2005

OFFICE OF PETITIONS

In re Application of	:
Pierre Louveaux et al	:
Application No. 09/563,781	: DECISION GRANTING PETITION
Filed: May 2, 2000	: UNDER 37 CFR 1.313(c)(2)
Attorney Docket No. 07844-398002	:

This is a decision on the petition, filed November 17, 2005, under 37 CFR 1.313(c)(2) to withdraw the above-identified application from issue after payment of the issue fee.

The petition is **GRANTED**.

The above-identified application is withdrawn from issue for consideration of a submission under 37 CFR 1.114 (request for continued examination). See 37 CFR 1.313(c)(2).

Petitioner is advised that the issue fee paid on May 19, 2005 in the above-identified application cannot be refunded. If, however, the above-identified application is again allowed, petitioner may request that it be applied towards the issue fee required by the new Notice of Allowance.[1]

Telephone inquiries should be directed to the undersigned at (571) 272-3218.

This matter is being referred to Technology Center AU 2672 for processing of the request for continued examination under 37 CFR 1.114 and for consideration of the Information Disclosure Statement.

Frances Hicks
Petitions Examiner
Office of Petitions

---

[1] *The request to apply the issue fee to the new Notice may be satisfied by completing and returning the new Issue Fee Transmittal Form PTOL-85(b) (along with any balance due at the time of payment), which includes the following language thereon: "Commissioner for Patents is requested to apply the Issue Fee and Publication Fee (if any) or re-apply any previously paid issue fee to the application identified above." Petitioner is advised that, whether a fee is indicated as being due or not, the Issue Fee Transmittal Form* **must** *be completed and timely submitted to avoid abandonment. Note the language in bold text on the first page of the Notice of Allowance and Fee(s) Due (PTOL-85).*

UNITED STATES
PATENT AND
TRADEMARK OFFICE

#27

UNDER SECRETARY OF COMMERCE FOR INTELLECTUAL PROPERTY
AND DIRECTOR OF THE UNITED STATES PATENT AND TRADEMARK OFFICE
PO BOX 1450, ALEXANDRIA, VA 22313-1450
WWW.USPTO.GOV

JUL 18 2003

MARISE S GOTTLIEB
215 CHESTNUT HILL ROAD
CHESTNUT HILL MA 02467

In re Application of	:
A. Arthur Gottlieb et al	:
Serial No.: 09/563,810	: PETITION DECISION
Filed: May 1, 2000	:
Attorney Docket No.:	:

This is in response to applicants' petition under 37 CFR 1.181, filed May 5, 2003, requesting withdrawal of the finality of an Office action..

A review of the file history shows that this application was filed May 1, 2000, and contained claims 1-30 (as correctly numbered). On November 3, 2000, the examiner mailed a first Office action to applicants setting forth a restriction requirement dividing the claims into three groups and an election of species if Group I was elected.. Applicants replied on November 27, 2000, with an appropriate election without traverse.

The examiner mailed a new Office action to applicants on December 27, 2000, withdrawing the non-elected claims. Elected claims 1-22 were rejected under 35 U.S.C. 112, second paragraph as indefinite with specific problems pointed out. Claims 1-2, 10-15 and 22 were rejected under 35 U.S.C. 112, first paragraph as containing subject matter not described in the specification and claims 1-13 were rejected as lacking enablement. Claims 14-16 (sic - 15) and 22 were rejected under 35 U.S.C. 102(b) as anticipated by Gottlieb et al.

Applicants replied on March 12, 2001, by amending claims 1, 10, 13-14 and 22 and by responding to the examiner's rejection of the claims for the various reasons set forth.

In the next Office action mailed to applicants on May 18, 2001, the examiner maintained the rejection under 35 U.S.C. 112, second paragraph, of claims 1-2, 9-15 and 22 for reasons similar to the previous Office action. Claims 1-2, 9-15, and 22 were further rejected under 35 U.S.C. 112, first paragraph, for reasons similar to those in the previous Office action. Claims 1-2, 9-15

and 22 were newly rejected under 35 U.S.C. 112, first paragraph, as lacking enablement. The rejection under 35 U.S.C. 102(b) was withdrawn. Applicants replied on August 13, 2001, amending claims 1, 2, 10, 11 and 13-14. The rejections of record were all responded to.

The examiner mailed a Final Office action to applicants on October 23, 2001, maintaining the rejection of claims 10-12 under 35 U.S.C. 112, second paragraph, for reasons of record, and maintaining the rejections of claims 1-2, 9-15 and 22 under 35 U.S.C. 112, first paragraph, for reasons of record. A personal interview was held January 17, 2002.

Applicants replied on February 21, 2002, by amending claims 1, 10, 13 and 14 and replying to all of the rejections and including an affidavit under 37 CFR 1.132. The examiner mailed an Advisory action to applicants on March 27, 2002, denying entry of the amendments as raising new issues requiring further consideration or search. Applicants filed RCE papers on April 15, 2002, requesting that the previous amendment be entered and fully considered.

The examiner entered the amendment and mailed a non-Final Office action to applicants on July 2, 2002, objecting to claims 10, 13 and 14 for a specific repetition. Claims 1-2, 9-15 and 22 were rejected under 35 U.S.C. 112, second paragraph, as indefinite, with the suggestion that the terms "immunoamplifier" and "selected immunoamplifiers" be deleted from the claims. Claims 10-15 and 22 were rejected under 35 U.S.C. 112, first paragraph, for lack of written description. Claims 1-2, 9-15 and 22 were also rejected under 35 U.S.C. 102(a) as anticipated by Gottlieb et al (10th Congress...), and under 35 U.S.C. 102(b) as anticipated by Gottlieb et al (Annals...).

Applicants repled on September 27, 2002, by amending claims 1, 10, 13 and 14 and responding to all rejections of record. The terms "immunoamplifier" and "selected immunoamplifiers" were deleted from the claims.

The examiner mailed a Final Office action to applicants on December 3, 2003, pointing out a typographical error in claim 10, and rejecting claims 1-2, 10-15 and 22 under 35 U.S.C. 112, second paragraph, for reasons, in part, different that those of the previous Office action. Claims 10-15 and 22 were rejected under 35 U.S.C. 112, first paragraph, for lack of written description. Claims 1-2, 9-15 and 22 were again rejected under 35 U.S.C. 102(a) as anticipated by Gottlieb et al (10th Congress...), and under 35 U.S.C. 102(b) as anticipated by Gottlieb et al (Annals...).

Applicants filed a reply on January 14, 2003, requesting, *inter alia,* that the finality of the previous Office action be withdrawn as new issues under 35 U.S.C. 112, second paragraph, not necessitated by applicants' amendment were raised. Further amendments to claims 10, 13 and 14 were made and new claims 31-36 (incorrectly numbered as 23-28) were added. No fees for the additional claims were submitted. An affidavit under 37 CFR 1.132 accompanied by reply.

The examiner mailed an Advisory Action to applicants on February 10, 2003, denying entry of the amendment on the basis of new issues being raised, it does not place the application in better form for appeal and it presents additional claims without canceling a corresponding number of claims.

Applicants filed a second amendment after Final rejection further amending claims 1, 10, 13 and 14 and adding claims 37-43 (incorrectly number as 31-37). Fees for claims added in the previous amendment and this amendment were charged to a credit card, as well as an extension of time fee. Applicants again requested withdrawal of the finality of the last Office action as well as replying to all issues.

The examiner mailed a second Advisory action to applicants on April 21, 2003, also denying entry of this amendment for essentially the same reasons as in the previous Advisory action.

Applicants then filed this petition on May 3, 2003, requesting withdrawal of the finality of the last Office action based on new rejections having been made which were not necessitated by applicants' amendments.

DISCUSSION

Applicants' petition is based on the fact that a rejection under 35 U.S.C. 112, second paragraph, was made with a suggestion as to how to overcome it, and that applicants' followed the examiner's suggestion and then received a new rejection under 35 U.S.C. 112, second paragraph, because of following of the examiner's suggestion. A review of the Office action of July 2, 2002, shows the examiner rejecting the terms "immunoamplifier" and "selected immunoamplifiers" as indefinite and suggesting they be withdrawn from the claims in which they appear. Applicant followed the suggestion in the next response. The examiner, in the next Office action of December 3, 2002, made a new rejection under 35 U.S.C. 112, second paragraph, (although continuing some other rejections under the same paragraph) based on Beta 1.0 not being the same as YG and YGG products. This rejection was not previously made, although it could have been made in the previous Office action.

Applicants' arguments presented in the two amendments after Final rejection were considered by the examiner, but apparently not fully understood. With the filing of this petition the examiner again reviewed the arguments presented and does now agree that a new ground of rejection was set forth in the Final Office action of December 3, 2003, and agrees that this was not necessitated by applicants' amendments.

One other matter is noted. In filing the first amendment after Final rejection applicants added claims 31-36, but failed to pay the fees associated with these additional claims or cancel a corresponding number of claims. In filing the second amendment after Final rejection claims 37-43 were added (and which are not the same as the previously added claims), again without canceling a corresponding number of pending claims. Authorization to charge the associated fees to a credit card was provided with the second amendment. These charges for claims in excess of the original 30 claims amounted to $117.00 for 13 additional claims and $504.00 for 13 additional independent claims in view of the fact that none of the non-elected claims have been canceled. In addition a $55.00 fee for a one month extension of time was charged to the same credit card. Hopefully this explains the charges made to the credit card supplied which exceeded that which was expected.

DECISION

Applicants' petition is **GRANTED.** The finality of the Office action of December 3, 2002, is withdrawn and any responses thereto will be considered under 37 CFR 1.111 as a response to a non-Final Office action.

The amendments filed January 14, 2003, and April 3, 2003, will be entered and fully considered by the examiner.

Should there be any questions with respect to this decision, please contact William R. Dixon, Jr., by mail addressed to: Director, Technology Center 1600, PO BOX 1450, ALEXANDRIA, VA 22313-1450, or by telephone at (703)308-3824 or by facsimile transmission at (703) 305-7230..

for

Jasemine C. Chambers
Director, Technology Center 1600

UNITED STATES PATENT AND TRADEMARK OFFICE

COMMISSIONER FOR PATENTS
UNITED STATES PATENT AND TRADEMARK OFFICE
WASHINGTON, D.C. 20231
www.uspto.gov

Paper No. 10

George O. Saile
20 McIntosh Drive
Poughkeepsie, NY 12603

COPY MAILED

NOV 0 5 2002

OFFICE OF PETITIONS

In re Application of :
Wai Shing Lau :
Application No. 09/563,833 : ON PETITION
Filed: May 5, 2000 :
Attorney Docket No. CS99-375 :

This is a decision on the petition under 37 CFR 1.137(b), filed October 15, 2002, to revive the above-identified application.

The petition is **GRANTED**.

The above-identified application became abandoned for failure to reply in a timely manner to the non-final Office action mailed December 3, 2001, which set a shortened statutory period for reply of
three (3) months. No extensions of time under the provisions of 37 CFR 1.136(a) were obtained. Accordingly, the above-identified application became abandoned on March 4, 2002.

An extension of time under 37 CFR 1.136 must be filed prior to the expiration of the maximum extendable period for reply. See In re Application of S., 8 USPQ2d 1630, 1631 (Comm'r Pats. 1988). Since the $920.00 extension of time submitted on June 13, 2002 was subsequent to the maximum extendable period for reply, the extension of time is unnecessary and the fee of $920.00 will be credited to petitioner's deposit account.

The file does not indicate a change of address has been submitted, although the address given on the petition differs from the address of record. If appropriate, a change of address should be filed in accordance with MPEP 601.03. A courtesy copy of this decision is being mailed to the address given on the petition; however, the Office will mail all future correspondence solely to the address of record.

Telephone inquiries concerning this decision should be directed to Cheryl Gibson-Baylor at (703)308-5111, or in her absence, Sherry Brinkley at (703)305-9220.

The application file is being forwarded to Technology Center 2800, Art Unit 2858.

Cheryl Gibson-Baylor
Petitions Examiner
Office of Petitions
Office of the Deputy Commissioner
for Patent Examination Policy

Sherry Brinkley
Petitions Examiner

cc: Stephen B. Ackerman
28 Davis Avenue
Poughkeepsie, NY 12603

UNITED STATES PATENT AND TRADEMARK OFFICE

Commissioner for Patents
United States Patent and Trademark Office
P.O. Box 1450
Alexandria, VA 22313-1450
www.uspto.gov

QUINE INTELLECTUAL PROPERTY LAW GROUP, P.C.
P O BOX 458
ALAMEDA CA 94501

COPY MAILED
OCT 0 4 2006
OFFICE OF PETITIONS

In re Application of	:	
Caplan	:	DECISION ON
Application No.: 09/563,999	:	
Filing Date: May 3, 2000	:	PETITION UNDER
Docket No.: 3272.001US2	:	
For: Keyboard Contoured To The Natural Shape Of The Hand	:	37 CFR 1.137(b)

This is a decision on Petition Under 37 CFR 1.137(b), filed on August 21, 2006.

The petition is **GRANTED**.

The above-identified application became abandoned for failure to file a timely and proper reply to the non-final Office communication mailed on December 5, 2005, which set a one-month period for response, which was extendable under 37 CFR 1.136(a). The application went abandoned at midnight on June 5, 2006. A Notice of Abandonment was mailed on June 22, 2006..

Petitioner has met the requirements for revival under §1.137(b). Petitioner submitted the reply in the form of an amendment, paid the petition fee and made the statement that "the entire delay in filing the required reply from the due date for the required reply until the filing of a grantable petition pursuant to 37 CFR 1.137(b) was unintentional." Since this utility application was filed after June 8, 1995, no terminal disclaimer is required. Accordingly, the petition is granted under §1.137(b).

This application is being referred to Technology Center 2854 for continued processing.

George Dombroske
PCT Legal Examiner
Office of PCT Legal Administration
on behalf of
Office of Petitions
Telephone: 571-272-3283
Facsimile: 571-273-0459

SPE RESPONSE FOR CERTIFICATE OF CORRECTION

Paper No.: _____

DATE : 8/29/05

TO SPE OF : ART UNIT 2192

SUBJECT : Request for Certificate of Correction on Patent No.: 6892382

A response is requested with respect to the accompanying request for a certificate of correction.

Please complete this form and return with file, within **7** days to:
Palm location **7580, Certificates of Correction Branch – South Tower – 9A22**
If response is for an IFW, **return to employee (named below) via PUBSCofC Team in MADRAS.**
With respect to the change(s) requested, correcting Office and/or Applicant's errors, should the patent read as shown in the certificate of correction (COCIN)? No new matter should be introduced, nor should the scope or meaning of the claims be changed.

Valerie Jackson

Thank You For Your Assistance

Certificates of Correction Branch
Tel. No. 703-308-9390 ext. 114

The request for issuing the above-identified correction(s) is hereby:
Note your decision on the appropriate box.

- ☒ **Approved** — All changes apply.
- ☐ **Approved in Part** — Specify below which changes **do not** apply.
- ☐ **Denied** — State the reasons for denial below.

Comments:

Please note, the references to be added to "Other Publications" are Examiner-cited references (see PTO-892 Notice of References Cited mailed 11/20/2002; the second page of this document was not scanned into IFW, but Applicant's supplied copy, filed with the request for CofC, is accurate.)

TUAN DAM
SUPERVISORY PATENT EXAMINER
SPE

2192
Art Unit

PTO/SB/44 (10-96)
Approved for use through 6/30/99. OMB 0651-0033
Patent and Trademark Office; U.S. DEPARTMENT OF COMMERCE
Under the Paperwork Reduction Act of 1995, no persons are required to respond to a collection of information unless it displays a valid OMB Control number

(Also Form PT-1050)

UNITED STATES PATENT AND TRADEMARK OFFICE
CERTIFICATE OF CORRECTION

PATENT NO. : 6,892,382 B1 Page 1 of 1

DATED : May 10, 2005

INVENTOR(S) : Hapner et al.

It is certified that error appears in the above-identified patent and that said Letters Patent are hereby corrected as shown below:

In the Cover Page:

Please add the following cited references in the "Other Publications" section:

--"JAR Guide", April 28, 1999, Sun Corporation--
--"jar – the Java Archive Tool", April 18, 1999, Sun Corporation--
--Dell, Thompson et al. "Manifest Format", April 28, 1999, Sun Corporation--

In the Specifications:

Column 5, line 31. change "Sum Microsystems" to --Sun Microsystems--.

Column 7, line 40, change "stand-along" to --stand-alone--.

Column 9, line 2, change "particular tem" to --particular system--.

Column 9, line 10, change "identities a gif" to --identifies a gif--.

Column 10, line 67, change "reference EJB™" to --referenced EJB™--.

Column 11, line 51,change "an internet" to --an internet network--.

MAILING ADDRESS OF SENDER:

John F. Griffith
BEYER WEAVER & THOMAS, LLP
P.O. Box 70250
Oakland, CA 94612-0250

PATENT NO. 6,892,382 B1

No. of Additional Copies

→ 1

Burden Hour Statement: This form is estimated to take 1.0 hour to complete. Time will vary depending upon the needs of the individual case. Any comments on the amount of time you are required to complete this form should be sent to the Chief Information Officer Patent and Trademark Office, Washington, DC 20231. DO NOT SEND FEES OR COMPLETED FORMS TO THIS ADDRESS. SEND TO: Assistant Commissioner for Patents, Washington, DC 20231.

AUG 1 8 2005

UNITED STATES PATENT AND TRADEMARK OFFICE

Commissioner for Patents
United States Patent and Trademark Office
P.O. Box 1450
Alexandria, VA 22313-1450
www.uspto.gov

GENERAL ELECTRIC COMPANY
ANDREW C HESS
GE AIRCRAFT ENGINES
ONE NEUMANN WAY M/D H17
CINCINNATI OH 45215-6301

COPY MAILED

JUL 07 2005

OFFICE OF PETITIONS

In re Patent No. 6,579,627	:	
Issue Date: June 17, 2003	:	
Application No. 09/564,120	:	DECISION ON PETITION
Filed: May 3, 2000	:	
Attorney Docket No. 13DV-13158(21635-0015)	:	

This is a decision on the petition under 37 CFR 1.183, filed May 2, 2005, which is being treated as a request under 37 CFR 3.81(b)[1] to correct the assignment information on the front page of the above-identified patent by way of a Certificate of Correction. The request is **granted**.

The Office finance records indicate that petitioner's Deposit Account was incorrectly charged a $400.00 petition fee. The current processing fee is $130.00. Accordingly, Deposit Account No. 50-1059 will be credited the difference in the amount of $270.00.

The matter is being referred to the Certificate of Correction Branch to issue the Certificate of Correction.

Telephone inquiries concerning this matter may be directed to the undersigned at (571) 272-3211. Any questions concerning the issuance of the Certificate of Correction should be directed to the Certificate of Correction Branch at (703) 305-8309.

Christina Tartera Donnell

Christina Tartera Donnell
Senior Petitions Attorney
Office of Petitions

---

[1] See Official Gazette of June 22, 2004

SPE RESPONSE FOR CERTIFICATE OF CORRECTION

Paper No.: _____

DATE : 09-03-09

TO SPE OF : ART UNIT 2893

SUBJECT : Request for Certificate of Correction for Appl. No.: 09/564141 Patent No.: 6517559

Please respond to this request for a certificate of correction within 7 days.

FOR IFW FILES:

Please review the requested changes/corrections as shown in the **COCIN** document(s) in the IFW application image. No new matter should be introduced, nor should the scope or meaning of the claims be changed.

Please complete the response (see below) and forward the completed response to scanning using document code **COCX**.

FOR PAPER FILES:

Please review the requested changes/corrections as shown in the attached certificate of correction. Please complete this form (see below) and forward it with the file to:

Certificates of Correction Branch (CofC)
South Tower - 9A22
Palm Location 7580

Angela Green
Certificates of Correction Branch
703-756-1541

Thank You For Your Assistance

The request for issuing the above-identified correction(s) is hereby:
Note your decision on the appropriate box.

- [x] **Approved** — **All** changes apply.
- [ ] **Approved in Part** — Specify below which changes **do not** apply.
- [ ] **Denied** — State the reasons for denial below.

Comments: Okay to enter
Exr. [illegible] 9/10/09

Darienne Monbleau 2893
SPE **Art Unit**

UNITED STATES DEPARTMENT OF COMMERCE
Patent and Trademark Office
ASSISTANT SECRETARY OF COMMERCE AND
COMMISSIONER OF PATENTS AND TRADEMARKS
Washington, DC 20231

2/20/09

Patent No. :7087819
Inventor(s) :Martin Edwards
Issued :8/8/2006
Title : NON-PUNGENT ORNAMENTAL PEPPERS
Atty.doc./File No.

Request for Certificates of Correction

Consideration has been given to your request for the issuance of a Certificate of Correction, for the above – identified patent under the provisions of CFR 1.322.

Inspection of the application for the patent reveals that claim 15 col. 9 line 3 is printed in accordance with the record and please show evidence of an amendment or document. Therefore being no fault on the Patent and Trademark Office, It has no authority to issue a certificate of correction under the provision of 1.322.

In view of the forgoing, your request in this matter, is hereby denied.

Future written correspondence concerning this matter should be filed and directed to Decisions & Certificates of Correction Branch.

Henry Randall
Cecelia Newman
Decisions & Certificates
of Correction Branch
(703) 308-9390 Ext. 108

Jondle & Assciates P.C.
858 Happy Canyon Road, Suite 230
Castle Rock, CO 80108

HR/MD

UNITED STATES PATENT AND TRADEMARK OFFICE

Commissioner for Patents
United States Patent and Trademark Office
P.O. Box 1450
Alexandria, VA 22313-1450
www.uspto.gov

Paper No. 10

JEAN-MARC ZIMMERMAN, ESQ.
ZIMMERMAN & LEVI, LLP
226 ST. PAUL STREET
WESTFIELD, NJ 07090

COPY MAILED

JUL 0 8 2004

OFFICE OF PETITIONS

In re Application of
Lin-Hendel
Application No. 09/564,311
Filed: May 3, 2000
Attorney Docket No. Lin-Hendel 3

ON PETITION

This decision concerns the April 9, 2004 petition under 37 CFR 1.137(b).

The petition is **GRANTED.**

On September 23, 2003, a final Office action was mailed, setting forth a 3-month shortened statutory reply period. A proposed amendment, filed on February 24, 2004 (Certificate of Mailing date February 21, 2004) along with a request for a 2-month extension of time and the extension-of-time fee, did not place the application in condition for allowance and was not entered by the Examiner. The March 9, 2004 Advisory Action informed Applicant that the reply period for responding to the September 23, 2003 final Office Action would remain that set forth in that Office action. Given that no further response was filed on or before March 23, 2004, the application became abandoned on February 24, 2004.

The instant petition encloses the $665 petition fee (small entity), a Request for Continued Examination (RCE) and the $385 RCE filing fee (small entity);[1] and instructs the USPTO to use the February 24, 2004 proposed amendment as the RCE "submission" required by 37 CFR 1.114. The petition also states in effect that the entire delay in responding to the September 23, 2003 final Office Action from the due date until the filing of a grantable §1.137(b) petition was unintentional. The petition is thus granted.

The application is hereby revived for establishing continuity with the RCE. Prosecution in the application is reopened.

The application file is being returned to Technology Center 2100 for continued examination.

Telephone inquiries should be directed to the undersigned at (703) 308-0763.

RC Tang
Petitions Attorney
Office of Petitions

---

[1] The $385 payment was credited to the account for this application on 4/13/04. The RCE was misplaced. A duplicate RCE was transmitted by facsimile on 7/8/04.

UNITED STATES PATENT AND TRADEMARK OFFICE

Commissioner for Patents
United States Patent and Trademark Office
P.O. Box 1450
Alexandria, VA 22313-1450
www.uspto.gov

DAVID VICTOR
KONRAD RAYNES & VICTOR, LLP
315 SOUTH BEVERLY DRIVE, STE. 210
BEVERLY HILLS, CA 90212

COPY MAILED

JUL 0 6 2005

OFFICE OF PETITIONS

In re Application of
William E. Malloy et al
Application No. 09/564,344
Filed: May 4, 2000
Attorney Docket No. STL000011US1

ON PETITION

This is a decision on the petition filed July 1, 2005, requesting withdrawal of the above-identified application from issue after payment of the issue fee.

The petition is **DISMISSED as moot.**

Unfortunately, the petition did not reach the appropriate official for decision within sufficient time to avert issuance of the application into a patent. Petitioner's attention is directed to 37 CFR 1.313(d), which states:

> A petition under this section will not be effective to withdraw the application from issue unless it is actually received and granted by the appropriate officials **before the date of issue.** Withdrawal of an application from issue after payment of the issue fee may not be effective to avoid publication of application information.

The information disclosure statement (IDS) has been placed in the file of the above-identified application without further consideration. See 37 CFR 1.97(l).

Telephone inquiries should be directed to the undersigned at (571) 272-3208.

The patented file is being referred to Files Repository.

Karen Creasy

Karen Creasy
Petitions Examiner
Office of Petitions
Office of the Deputy Commissioner
for Patent Examination Policy

Under the Paperwork Reduction Act of 1995, no persons are required to respond to a collection of information unless it displays valid OMB control number.

PETITION TO ACCEPT UNINTENTIONALLY DELAYED PAYMENT OF MAINTENANCE FEE IN AN EXPIRED PATENT (37 CFR 1.378(c))

Patent Number	Issue Date (YYYY-MM-DD)	Application Number	Filing Date (YYYY-MM-DD)	Docket Number (if applicable)
6,483,076	2002-11-19	09/564,360	2000-05-02	69012-39

CAUTION: Maintenance fee (and surcharge, if any) payment must correctly identify: (1) the patent number and (2) the application number of the actual U.S. application leading to issuance of that patent to ensure the fee(s) is/are associated with the correct patent. 37 CFR 1.366(c) and (d).

SMALL ENTITY
☒ Patentee claims, or has previously claimed, small entity status. See 37 CFR 1.27.

LOSS OF ENTITLEMENT TO SMALL ENTITY STATUS
☐ Patentee is no longer entitled to small entity status. See 37 CFR 1.27(g)

NOT Small Entity		Small Entity	
Fee	Code	Fee	Code
○ 3 ½ year	(1551)	◉ 3 ½ year	(2551)
○ 7 ½ year	(1552)	○ 7 ½ year	(2552)
○ 11 ½ year	(1553)	○ 11 ½ year	(2553)

SURCHARGE
The surcharge required by 37 CFR 1.20(i)(2) (Fee Code 1558) must be paid as a condition of accepting unintentionally delayed payment of the maintenance fee.

MAINTENANCE FEE (37 CFR 1.20(e)-(g))
The appropriate maintenance fee must be submitted with this petition.

STATEMENT
THE UNDERSIGNED CERTIFIES THAT THE DELAY IN PAYMENT OF THE MAINTENANCE FEE TO THIS PATENT WAS UNINTENTIONAL

PETITIONER(S) REQUEST THAT THE DELAYED PAYMENT OF THE MAINTENANCE FEE BE ACCEPTED AND THE PATENT REINSTATED

THIS PORTION MUST BE COMPLETED BY THE SIGNATORY OR SIGNATORIES

37 CFR 1.378(d) states: "Any petition under this section must be signed by an attorney or agent registered to practice before the Patent and Trademark Office, or by the patentee, the assignee, or other party in interest."

I certify, in accordance with 37 CFR 1.4(d)(4) that I am

◉ An attorney or agent registered to practice before the Patent and Trademark Office

○ A sole patentee

○ A joint patentee; I certify that I am authorized to sign this submission on behalf of all the other patentees.

○ A joint patentee; all of whom are signing this e-petition

○ The assignee of record of the entire interest

Patent Practitioner			
A signature of the applicant or representative is required in accordance with 37 CFR 1.33 and 10.18. Please see 37 CFR 1.4(d) for the form of the signature			
Signature	/W. Scott Harders/	Date (YYYY-MM-DD)	2007-05-17
Name	W. Scott Harders	Registration Number	42629

This collection of information is required by 37 CFR 1.378(c). The information is required to obtain or retain a benefit by the public which is to file (and by the USPTO to process) an application. Confidentiality is governed by 35 U.S.C. 122 and 37 CFR 1.11 and 1.14. This collection is estimated to take 1 hour to complete, including gathering, preparing, and submitting the completed application form to the USPTO. Time will vary depending upon the individual case. Any comments on the amount of time you require to complete this form and/ or suggestions for reducing this burden, should be sent to the Chief Information Officer, U.S. Patent and Trademark Office, U.S. Department of Commerce, P.O. Box 1450, Alexandria, VA 22313-1450. DO NOT SEND FEES OR COMPLETED FORMS TO THIS ADDRESS. **This form can only be used when in conjunction with EFS-Web. If this form is mailed to the USPTO, it may cause delays in reinstating the patent.**

Privacy Act Statement

The Privacy Act of 1974 (P.L. 93-579) requires that you be given certain information in connection with your submission of the attached form related to a patent application or patent. Accordingly, pursuant to the requirements of the Act, please be advised that: (1) the general authority for the collection of this information is 35 U.S.C. 2(b)(2); (2) furnishing of the information solicited is voluntary; and (3) the principal purpose for which the information is used by the U.S. Patent and Trademark Office is to process and/or examine your submission related to a patent application or patent. If you do not furnish the requested information, the U.S. Patent and Trademark Office may not be able to process and/or examine your submission, which may result in termination of proceedings or abandonment of the application or expiration of the patent.

The information provided by you in this form will be subject to the following routine uses:

1. The information on this form will be treated confidentially to the extent allowed under the Freedom of Information Act (5 U.S.C. 552) and the Privacy Act (5 U.S.C. 552a). Records from this system of records may be disclosed to the Department of Justice to determine whether the Freedom of Information Act requires disclosure of these record s.

2. A record from this system of records may be disclosed, as a routine use, in the course of presenting evidence to a court, magistrate, or administrative tribunal, including disclosures to opposing counsel in the course of settlement negotiations.

3. A record in this system of records may be disclosed, as a routine use, to a Member of Congress submitting a request involving an individual, to whom the record pertains, when the individual has requested assistance from the Member with respect to the subject matter of the record.

4. A record in this system of records may be disclosed, as a routine use, to a contractor of the Agency having need for the information in order to perform a contract. Recipients of information shall be required to comply with the requirements of the Privacy Act of 1974, as amended, pursuant to 5 U.S.C. 552a(m).

5. A record related to an International Application filed under the Patent Cooperation Treaty in this system of records may be disclosed, as a routine use, to the International Bureau of the World Intellectual Property Organization, pursuant to the Patent Cooperation Treaty.

6. A record in this system of records may be disclosed, as a routine use, to another federal agency for purposes of National Security review (35 U.S.C. 181) and for review pursuant to the Atomic Energy Act (42 U.S.C. 218(c)).

7. A record from this system of records may be disclosed, as a routine use, to the Administrator, General Services, or his/her designee, during an inspection of records conducted by GSA as part of that agency's responsibility to recommend improvements in records management practices and programs, under authority of 44 U.S.C. 2904 and 2906. Such disclosure shall be made in accordance with the GSA regulations governing inspection of records for this purpose, and any other relevant (i.e., GSA or Commerce) directive. Such disclosure shall not be used to make determinations about individuals.

8. A record from this system of records may be disclosed, as a routine use, to the public after either publication of the application pursuant to 35 U.S.C. 122(b) or issuance of a patent pursuant to 35 U.S.C. 151. Further, a record may be disclosed, subject to the limitations of 37 CFR 1.14, as a routine use, to the public if the record was filed in an application which became abandoned or in which the proceedings were terminated and which application is referenced by either a published application, an application open to public inspections or an issued patent.

9. A record from this system of records may be disclosed, as a routine use, to a Federal, State, or local law enforcement agency, if the USPTO becomes aware of a violation or potential violation of law or regulation.

UNITED STATES PATENT AND TRADEMARK OFFICE

Commissioner for Patents
United States Patent and Trademark Office
P.O. Box 1450
Alexandria, VA 22313-1450
www.uspto.gov

In re Patent No. 6483076
Issue Date: November 19,2002
Application No. 09564360
Filed: May 2,2000
Attorney Docket No. LSP-31

:
:DECISION GRANTING PETITION
:UNDER 37 CFR 1.378(c)
:

This is a decision on the electronic petition, filed May 18,2007 ,under 37 CFR 1.378(c) to accept the unintentionally delayed payment of the 3.5 year maintenance fee for the above-identified patent.

The petition is GRANTED.

The maintenance fee is accepted, and the above-identified patent reinstated as of May 18,2007 . This decision also constitutes notice that the fee has been accepted. An electronic copy of the petition and this decision has been created as an entry in an Image File Wrapper. Nevertheless, petitioner should print and retain an independent copy

Telephone inquires related to this electronic decision should be directed to the Electronic Business Center at 1-866-217-9197.

UNITED STATES PATENT AND TRADEMARK OFFICE

COMMISSIONER FOR PATENTS
UNITED STATES PATENT AND TRADEMARK OFFICE
P.O. BOX 1450
ALEXANDRIA, VA 22313-1450
www.uspto.gov

I P & S
345 SCARBOUOUGH ROAD
BRIARCLISS MANOR, NY 10510

COPY MAILED

JAN 19 2007

OFFICE OF PETITIONS

In re Application of :
Viktor L. Gornstein, et al. :
Application No. 09/564,427 : ON PETITION
Filed: May 4, 2000 :
Attorney Docket No. US000083 :

This is a decision on the petition under 37 CFR 1.137(b), filed August 25, 2006, to revive the above-identified application.

There is no indication that the person signing the instant petition was ever given a power of attorney or authorization of agent to prosecute the above-identified application. However, in accordance with 37 CFR 1.34(a), the signature of Kevin Fortin appearing on the petition shall constitute a representation to the United States Patent and Trademark Office that he is authorized to represent the particular party on whose behalf he acts. A courtesy copy of this decision is being mailed to petitioner. However, if Mr. Fortin desires to receive future correspondence regarding this application, the appropriate power of attorney or authorization of agent must be submitted. All future correspondence regarding this application file will be directed solely to the address of record.

The petition is **DISMISSED**.

Any request for reconsideration of this decision must be submitted within TWO (2) MONTHS from the mail date of this decision. Extensions of time under 37 CFR 1.136(a) are permitted. The reconsideration request should include a cover letter entitled "Renewed Petition under 37 CFR 1.137(b)." This is **not** final agency action within the meaning of 5 U.S.C. § 704.

A grantable petition under 37 CFR 1.137(b)[1] must be accompanied by: (1) the required reply,[2] unless previously filed; (2) the petition fee as set forth in 37 CFR 1.17(m); (3) a statement that the entire delay in filing the required reply from the due date for the reply until the filing of a grantable petition pursuant to 37 CFR 1.137(b) was unintentional; and (4) any terminal disclaimer (and fee as set forth in 37 CFR 1.20(d)) required by 37 CFR 1.137(c). Where there is a question as to whether either the abandonment or the delay in filing a petition under 37 CFR 1.137 was unintentional, the Commissioner may require additional information. See MPEP 711.03(c)(III)(C) and (D). The instant petition lacks item 1.

---

[1] As amended effective December 1, 1997. See Changes to Patent Practice and Procedure; Final Rule Notice, 62 Fed. Reg. 53131, 53194-95 (October 10, 1997), 1203 Off. Gaz. Pat. Office 63, 119-20 (October 21, 1997).

[2] In a nonprovisional application abandoned for failure to prosecute, the required reply may be met by the filing of a continuing application. In an application or patent, abandoned or lapsed for failure to pay the issue fee or any portion thereof, the required reply must be the payment of the issue fee or any outstanding balance thereof.

It is noted that an amendment was filed on August 25, 2006. However, the amendment is considered non-responsive, since it did not place the application in condition for allowance. See the attached Advisory Action. Accordingly, the proposed reply required for consideration of a petition to revive this application must be a Notice of Appeal (and appeal fee required by 37 CFR 1.17(b)), an amendment that *prima facie* places the application in condition for allowance, or the filing of a submission under 37 CFR 114 (RCE) or a continuing application under 37 CFR 1.53(b). See MPEP 711.03(c)(III)(A)(2).

Further correspondence with respect to this matter should be addressed as follows:

By mail: Mail Stop PETITION
Commissioner for Patents
Post Office Box 1450
Alexandria, VA 22313-1450

By hand: U.S. Patent and Trademark Office
Customer Service Window, Mail Stop PETITION
Randolph Building
401 Dulany Street
Alexandria, VA 22314

The centralized facsimile number is **(571) 273-8300**.

Any questions concerning this matter may be directed to the undersigned at (571) 272-3204.

Sherry D. Brinkley
Petitions Examiner
Office of Petitions

Attachment: Advisory Action

cc: KEVIN FORTIN
PHILIPS ELECTRONIC NORTH AMERICA CORP.
1109 MCKAY DRIVE, MS41-SJ
SAN JOSE, CA 95131

Advisory Action Before the Filing of an Appeal Brief	Application No. 09/564,427	Applicant(s) GORNSTEIN ET AL.	
	Examiner Chat C. Do	Art Unit 2193	

--The MAILING DATE of this communication appears on the cover sheet with the correspondence address --

THE REPLY FILED 25 August 2006 FAILS TO PLACE THIS APPLICATION IN CONDITION FOR ALLOWANCE.

1. ☒ The reply was filed after a final rejection, but prior to or on the same day as filing a Notice of Appeal. To avoid abandonment of this application, applicant must timely file one of the following replies: (1) an amendment, affidavit, or other evidence, which places the application in condition for allowance; (2) a Notice of Appeal (with appeal fee) in compliance with 37 CFR 41.31; or (3) a Request for Continued Examination (RCE) in compliance with 37 CFR 1.114. The reply must be filed within one of the following time periods:
   a) ☒ The period for reply expires 3 months from the mailing date of the final rejection.
   b) ☐ The period for reply expires on: (1) the mailing date of this Advisory Action, or (2) the date set forth in the final rejection, whichever is later. In no event, however, will the statutory period for reply expire later than SIX MONTHS from the mailing date of the final rejection.
   Examiner Note: If box 1 is checked, check either box (a) or (b). ONLY CHECK BOX (b) WHEN THE FIRST REPLY WAS FILED WITHIN TWO MONTHS OF THE FINAL REJECTION. See MPEP 706.07(f).

Extensions of time may be obtained under 37 CFR 1.136(a). The date on which the petition under 37 CFR 1.136(a) and the appropriate extension fee have been filed is the date for purposes of determining the period of extension and the corresponding amount of the fee. The appropriate extension fee under 37 CFR 1.17(a) is calculated from: (1) the expiration date of the shortened statutory period for reply originally set in the final Office action; or (2) as set forth in (b) above, if checked. Any reply received by the Office later than three months after the mailing date of the final rejection, even if timely filed, may reduce any earned patent term adjustment. See 37 CFR 1.704(b).

NOTICE OF APPEAL

2. ☐ The Notice of Appeal was filed on _____. A brief in compliance with 37 CFR 41.37 must be filed within two months of the date of filing the Notice of Appeal (37 CFR 41.37(a)), or any extension thereof (37 CFR 41.37(e)), to avoid dismissal of the appeal. Since a Notice of Appeal has been filed, any reply must be filed within the time period set forth in 37 CFR 41.37(a).

AMENDMENTS

3. ☒ The proposed amendment(s) filed after a final rejection, but prior to the date of filing a brief, will not be entered because
   (a) ☒ They raise new issues that would require further consideration and/or search (see NOTE below);
   (b) ☐ They raise the issue of new matter (see NOTE below);
   (c) ☐ They are not deemed to place the application in better form for appeal by materially reducing or simplifying the issues for appeal; and/or
   (d) ☐ They present additional claims without canceling a corresponding number of finally rejected claims.
   NOTE: _____. (See 37 CFR 1.116 and 41.33(a)).
4. ☐ The amendments are not in compliance with 37 CFR 1.121. See attached Notice of Non-Compliant Amendment (PTOL-324).
5. ☐ Applicant's reply has overcome the following rejection(s): _____.
6. ☐ Newly proposed or amended claim(s) _____ would be allowable if submitted in a separate, timely filed amendment canceling the non-allowable claim(s).
7. ☒ For purposes of appeal, the proposed amendment(s): a) ☒ will not be entered, or b) ☐ will be entered and an explanation of how the new or amended claims would be rejected is provided below or appended.
   The status of the claim(s) is (or will be) as follows:
   Claim(s) allowed: *1-3,5,6 and 20-23*.
   Claim(s) objected to: _____.
   Claim(s) rejected: *9-11*.
   Claim(s) withdrawn from consideration: _____.

AFFIDAVIT OR OTHER EVIDENCE

8. ☐ The affidavit or other evidence filed after a final action, but before or on the date of filing a Notice of Appeal will not be entered because applicant failed to provide a showing of good and sufficient reasons why the affidavit or other evidence is necessary and was not earlier presented. See 37 CFR 1.116(e).
9. ☐ The affidavit or other evidence filed after the date of filing a Notice of Appeal, but prior to the date of filing a brief, will not be entered because the affidavit or other evidence failed to overcome all rejections under appeal and/or appellant fails to provide a showing a good and sufficient reasons why it is necessary and was not earlier presented. See 37 CFR 41.33(d)(1).
10. ☐ The affidavit or other evidence is entered. An explanation of the status of the claims after entry is below or attached.

REQUEST FOR RECONSIDERATION/OTHER

11. ☒ The request for reconsideration has been considered but does NOT place the application in condition for allowance because: See below.
12. ☐ Note the attached Information Disclosure Statement(s). (PTO/SB/08) Paper No(s). _____
13. ☐ Other: _____.

Part 3(a): The applicant has amended claims 9-11 by requiring all the steps in the claims. These amended claims might raise new issue that would require further consideration prior making solid decision.

Part 11: The applicant amended claims 9-11 which requires all the limitations cited in the claims 9-11 to be considered. This would change the scope of the claims 9-11 as narrowing the scope of the claim by including more limitations.

UNITED STATES PATENT AND TRADEMARK OFFICE

COMMISSIONER FOR PATENTS
UNITED STATES PATENT AND TRADEMARK OFFICE
P.O. BOX 1450
ALEXANDRIA, VA 22313-1450
www.uspto.gov

COPY MAILED

AUG 15 2007

OFFICE OF PETITIONS

PHILIPS INTELLECTUAL PROPERTY & STANDARDS
P.O. BOX 3001
BRIARCLIFF MANOR, NY 10510

In re Application of :
Victor I. Gornstein, et al. :
Application No. 09/564,427 : ON PETITION
Filed: September 4, 2000 :
Attorney Docket No. US000083 :

This is a decision on the renewed petition under 37 CFR 1.137(b), filed April 19, 2007, to revive the above-identified application.

The petition is not signed by an attorney of record. However, in accordance with 37 CFR 1.34(a), the signature of Dicran Halajian appearing on the petition shall constitute a representation to the United States Patent and Trademark Office that he is authorized to represent the particular party on whose behalf he acts. A courtesy copy of this decision is being mailed to petitioner. However, if Mr. Halajian desires to receive future correspondence regarding this application, the appropriate power of attorney or authorization of agent must be submitted. Until otherwise instructed, all future correspondence regarding this application will be directed solely to the address of record.

This application became abandoned for failure to timely reply to the final Office action mailed July 15, 2004. A Notice of Abandonment was mailed on July 27, 2006. In response, on August 25, 2006 a petition under 37 CFR 1.137(b) was filed; however, the petition was dismissed in a decision mailed January 19, 2007. It is noted that the requisite petition fee was not charged as authorized in the petition filed August 25, 2006; therefore, the $1,500 fee will be so charged. On April 19, 2007 petitioner submitted, *inter alia*, the present petition and an appropriate petition for extension of time.

The petition satisfies the requirements of 37 CFR 1.137(b) in that petitioner has supplied (1) the reply in the form of a Request for Continued Examination (RCE), including the fee of $790; (2) the petition fee of $1,500; and (3) an adequate statement of unintentional delay[1].

[1] 37 CFR 1.137(b)(3) requires a statement that the entire delay in filing the required reply from the due date for the reply until the filing of a grantable petition pursuant to 37 CFR 1.137(b) was unintentional. While the statement is not made by an attorney of record, such statement is being treated as having been made as the result of a reasonable inquiry into the facts and circumstances of such delay. See 37 CFR 10.18(b) and Changes to Patent Practice and Procedure; Final Rule Notice, 62 Fed. Reg. 53131, 53178 (October 10, 1997), 1203 Off. Gaz. Pat. Office 63, 103 (October 21, 1997). In the event that such an inquiry has not been made, petitioner must make such an inquiry. If such inquiry results in the discovery that it is not correct that the entire delay in filing the required reply from the due date for the reply until the filing of a grantable petition pursuant to 37 CFR 1.137(b) was unintentional, petitioner must notify the Office.

Telephone inquiries concerning this decision should be directed to the undersigned at (571) 272-3204.

The application file is being forwarded to Technology Center AU 2193, for further processing of the request for continued examination under 37 CFR 1.114 filed April 19, 2007.

Sherry D. Brinkley
Petitions Examiner
Office of Petitions

cc: DICRAN HALAJIAN
THORNE & HALAJIAN, LLP
APPLIED TECHNOLOGY CENTER
111 WEST MAIN ST.
BAY SHORE, NY 11706

UNITED STATES PATENT AND TRADEMARK OFFICE

UNITED STATES DEPARTMENT OF COMMERCE
United States Patent and Trademark Office
Address: COMMISSIONER FOR PATENTS
P.O. Box 1450
Alexandria, Virginia 22313-1450
www.uspto.gov

SEYFARTH SHAW LLP
131 S. DEARBORN ST., SUITE 2400
CHICAGO, IL 60603-5803

Mail Date: 07/06/2010

Applicant	: Paulina Glavich	: DECISION ON REQUEST FOR
Patent Number	: 6309300	: RECALCULATION of PATENT
Issue Date	: 10/30/2001	: TERM ADJUSTMENT IN VIEW
Application No	: 09/564,493	: OF WYETH
Filed	: 05/04/2000	:
		:

The Patentee's Request for Recalculation is **DISMISSED.**

This Request is deemed ineligible for consideration for one or more of the following reasons:

(A). The patent for which PTA recalculation is requested is either a design or reissue application or is a reexamination proceeding;

(B). The patent for which PTA recalculation is requested resulted from a utility or plant application filed under 35 USC 111(a) before May 29, 2000 and no CPA filed in the application on/after May 29, 2000;

(C). The patent for which PTA recalculation is requested resulted from an international application in which the international filing date was before May 29, 2000 and no CPA filed in the application on/after May 29, 2000;

(D). The patent for which PTA recalculation is requested issued on/after March 2, 2010;

(E). The Request for Recalculation was filed more than 180 days after the grant date of the patent and the request was not filed within two months of a dismissal of a request for reconsideration of the of the patent term under 37 CFR 1.705(d);

(F). The Request for Recalculation is not solely limited to USPTO pre-Wyeth interpretation of 35 U.S.C. 154(b)(2)(A);

or

(G). A civil action was filed pursuant to 35 U.S.C. 154(b)(4)(A)concerning the same patent at issue in this request.

Patentee may file a reply to this decision dismissing the Request for Recalculation. Patentee must file such reply within one month or thirty days, whichever is longer, of the mail date of the decision dismissing the Request for Recalculation. No fee is required if patentee is asserting in the reply that the dismissal for ineligibility is improper.

Patentee should use document code PET.OP if electronically filing a reply to this dismissal. If the USPTO finds that the request was improperly deemed ineligible, the USPTO will mail applicant a recalculation determination.

Patentee should be aware that in order to preserve the right to review in the United States District Court for the District of Columbia of the USPTO patent term adjustment determination, patentee must ensure that he or she also take the steps required under 35 U.S.C. 154(b)(4)(A). Nothing in the request for recalculation should be construed as providing an alternative time frame for commencing a civil action under 35 U.S.C. 154 (b)(4)(A).

Any questions concerning this decision should be directed to the Office of Patent Legal Administration at 571-272-7702.

SPE RESPONSE FOR CERTIFICATE OF CORRECTION

Paper No.: _____

DATE : March 6, 2006

TO SPE OF : ART UNIT 1653

SUBJECT : Request for Certificate of Correction on Patent No.: 6,864,294 /APPL.09/564501

A response is requested with respect to the accompanying request for a certificate of correction.

Please complete this form and return with file, within **7** days to:

Palm location **7580, Certificates of Correction Branch – South Tower – 9A22**

If response is for an IFW, **return to employee (named below) via PUBSCofC Team in MADRAS.**

With respect to the change(s) requested, correcting Office and/or Applicant's errors, should the patent read as shown in the certificate of correction (COCIN)? No new matter should be introduced, nor should the scope or meaning of the claims be changed.

Magdalene Talley

Thank You For Your Assistance

Certificates of Correction Branch

Tel. No. 703-308-9309 ext. 116

The request for issuing the above-identified correction(s) is hereby:

Note your decision on the appropriate box.

- ☒ **Approved** — All changes apply.
- ☐ **Approved in Part** — Specify below which changes **do not** apply.
- ☐ **Denied** — State the reasons for denial below.

Comments:

Cass Jagannathan — **SPE**

1714 — **Art Unit**

UNITED STATES PATENT AND TRADEMARK OFFICE

UNITED STATES DEPARTMENT OF COMMERCE
United States Patent and Trademark Office
Address: COMMISSIONER FOR PATENTS
P.O. Box 1450
Alexandria, Virginia 22313-1450
www.uspto.gov

ORRICK, HERRINGTON & SUTCLIFFE, LLP
IP PROSECUTION DEPARTMENT
4 PARK PLAZA
SUITE 1600
IRVINE, CA 92614-2558

Mail Date: 04/23/2010

Applicant	: Thomas D. Tyler	: DECISION ON REQUEST FOR
Patent Number	: 7635388	: RECALCULATION of PATENT
Issue Date	: 12/22/2009	: TERM ADJUSTMENT IN VIEW
Appliction No	: 09/564,525	: OF WYETH
Filed	: 05/04/2000	:
		:

The Patentee's Request for Recalculation is **DISMISSED.**

This Request is deemed ineligible for consideration for one or more of the following reasons:

(A). The patent for which PTA recalculation is requested is either a design or reissue application or is a reexamination proceeding;

(B). The patent for which PTA recalculation is requested resulted from a utility or plant application filed under 35 USC 111(a) before May 29, 2000 and no CPA filed in the application on/after May 29, 2000;

(C). The patent for which PTA recalculation is requested resulted from an international application in which the international filing date was before May 29, 2000 and no CPA filed in the application on/after May 29, 2000;

(D). The patent for which PTA recalculation is requested issued on/after March 2, 2010;

(E). The Request for Recalculation was filed more than 180 days after the grant date of the patent and the request was not filed within two months of a dismissal of a request for reconsideration of the of the patent term under 37 CFR 1.705(d);

(F). The Request for Recalculation is not solely limited to USPTO pre-Wyeth interpretation of 35 U.S.C. 154(b)(2)(A);

or

(G). A civil action was filed pursuant to 35 U.S.C. 154(b)(4)(A)concerning the same patent at issue in this request.

Patentee may file a reply to this decision dismissing the Request for Recalculation. Patentee must file such reply within one month or thirty days, whichever is longer, of the mail date of the decision dismissing the Request for Recalculation. No fee is required if patentee is asserting in the reply that the dismissal for ineligibility is improper.

Patentee should use document code PET.OP if electronically filing a reply to this dismissal. If the USPTO finds that the request was improperly deemed ineligible, the USPTO will mail applicant a recalculation determination.

Patentee should be aware that in order to preserve the right to review in the United States District Court for the District of Columbia of the USPTO patent term adjustment determination, patentee must ensure that he or she also take the steps required under 35 U.S.C. 154(b)(4)(A). Nothing in the request for recalculation should be construed as providing an alternative time frame for commencing a civil action under 35 U.S.C. 154 (b)(4)(A).

Any questions concerning this decision should be directed to the Office of Patent Legal Administration at 571-272-7702.

UNITED STATES PATENT AND TRADEMARK OFFICE

Commissioner for Patents
United States Patent and Trademark Office
P. O. Box 1450
Alexandria, VA 22313-1450
www.uspto.gov

Paper No. 18

JOHN S. PRATT
KILPATRICK STOCKTON LLP
1100 PEACHTREE STREET, SUITE 2800
ATLANTA, GA 30309

COPY MAILED

SEP 2 9 2003

OFFICE OF PETITIONS

In re Application of
Frederick Lang et al
Application No. 09/564,531
Filed: May 4, 2000
Attorney Docket No. 11302-0970

ON PETITION

This is a decision on the petition under 37 CFR 1.137(b), filed August 4, 2003, to revive the above-identified application.

The petition is **GRANTED**.

The above-identified application became abandoned for failure to reply in a timely manner to the non-final Office action mailed March 6, 2002, which set a shortened statutory period for reply of three (3) months. No extensions of time under the provisions of 37 CFR 1.136(a) were obtained. Accordingly, the above-identified application became abandoned on June 7, 2002.

Telephone inquiries concerning this decision should be directed to Irvin Dingle at (703) 306-5684.

The application file is being forwarded to Technology Center 1700 for further processing.

Irvin Dingle
Petitions Examiner
Office of Petitions
Office of the Deputy Commissioner
for Patent Examination Policy

UNITED STATES PATENT AND TRADEMARK OFFICE

Commissioner for Patents
United States Patent and Trademark Office
P.O. Box 1450
Alexandria, VA 22313-1450
www.uspto.gov

BRINKS HOFER GILSON & LIONE
P O BOX 10395
CHICAGO, IL 60610

COPY MAILED
AUG 2 2 2006
OFFICE OF PETITIONS

In re Application of	:
Frederick J. Lang et al	:
Application No. 09/564,531	: DECISION GRANTING PETITION
Filed: May 4, 2000	: UNDER 37 CFR 1.313(c)(2)
Attorney Docket No. 659/1720	:

This is a decision on the petition, filed August 18, 2006, under 37 CFR 1.313(c)(2) to withdraw the above-identified application from issue after payment of the issue fee.

The petition is **GRANTED**.

The above-identified application is withdrawn from issue for consideration of a submission under 37 CFR 1.114 (request for continued examination). See 37 CFR 1.313(c)(2).

Petitioner is advised that the issue fee paid on December 22, 2005 in the above-identified application cannot be refunded. If, however, the above-identified application is again allowed, petitioner may request that it be applied towards the issue fee required by the new Notice of Allowance.[1]

Telephone inquiries should be directed to the undersigned at (571) 272-3218.

This matter is being referred to Technology Center AU 1764 for processing of the request for continued examination under 37 CFR 1.114 and for consideration of the concurrently filed amendment and Information Disclosure Statement.

Frances Hicks
Petitions Examiner
Office of Petitions

C:\Documents and Settings\FHicks\My Documents\470\Aug9\564531.wpd

---

[1] *The request to apply the issue fee to the new Notice may be satisfied by completing and returning the new Part B – Fee(s) Transmittal Form (along with any balance due at the time of submission), which includes the following language thereon: "The Director of the USPTO is requested to apply the Issue Fee and Publication Fee (if any) or to re-apply any previously paid issue fee in the application identified above. Petitioner is advised that the Issue Fee Transmittal Form must be completed and timely submitted to avoid abandonment.*

UNITED STATES PATENT AND TRADEMARK OFFICE

COMMISSIONER FOR PATENT
UNITED STATES PATENT AND TRADEMARK OFFIC
WASHINGTON, D.C. 20231
www.uspto.go

Paper No. 9

Robert E. Krebs
Thelen Reid & Priest LLP
P.O. Box 640640
San Jose CA 95164-0640

AUG 13 2003

In re Application of:	:	
Ronald A. Meck	:	DECISION TO WITHDRAW
Application No. 09/564,548	:	HOLDING
Filed: May 04, 2000	:	OF ABANDONMENT
Attorney Docket No. 034942-188	:	

This is a decision on the communication filed January 01, 2003. The communication has been treated as a request to withdraw the holding of abandonment, under 37 CFR § 1.181, in the above-identified application. No petition fee is required.

The petition is **dismissed**.

A final Office action was mailed on October 19, 2001. Although no Notice of Abandonment has been mailed, the application the application would have gone abandoned, by operation of law, at midnight on November 19, 2002, at the end of the shortened statutory period for response, including all possible extensions of time.

Petitioner asserts that a response was submitted by first class mail to the U.S. Patent and Trademark Office (PTO) on January 22, 2002. To support this assertion, petitioner has submitted a copy of the response. The response includes a copy of a one page Request for Continued Examination form bearing a certificate of mailing dated January 22, 2002, and a copy of a seven page amendment.

A review of the application file record reveals that the above-identified response is not of record in the application file and cannot be located.

The failure to receive correspondence in the PTO that was timely deposited in the U.S. mail or transmitted by facsimile is addressed in 37 CFR § 1.8(b), and reproduced below:

> In the event that correspondence is considered timely filed by being mailed or transmitted in accordance with paragraph (a) of this section, but not received in the Patent and Trademark Office, and the application is held to be abandoned or the proceeding is dismissed, terminated, or decided with prejudice, the correspondence will be considered

> timely if the party who forwarded such correspondence: (1) informs the Office of the previous mailing or transmission of the correspondence promptly after becoming aware that the Office has no evidence of receipt of the correspondence; (2) supplies an additional copy of the previously mailed or transmitted correspondence and certificate; and (3) includes a statement which attests on a personal knowledge basis or to the satisfaction of the Commissioner to the previous timely mailing or transmission. If the correspondence was sent by facsimile transmission, a copy of the sending unit's report confirming transmission may be used to support this statement.

This petition does not include a statement which attests on a personal knowledge basis or to the satisfaction of the Commissioner to the previous timely mailing or transmission, as set forth in 37 CFR § 1.8(b)(3).

Accordingly, the petition is **dismissed**.

Should petitioner desire reconsideration, petitioner should supplement this petition with a showing providing the needed information as outlined above. A copy of a properly itemized, date stamped post card receipt may be used to support the statement under 37 CFR § 1.8(b)(3).

Any request for reconsideration must be filed within TWO MONTHS of the date of this decision.

Petitioner may wish to consider filing a petition under 37 CFR 1.137(a) or (b) requesting that the application be revived.

Inquiries regarding this decision should be directed to Clayton E. LaBalle at (703) 308-0519.

Clayton E. LaBalle, Special Programs Examiner
Technology Center 2800
Semiconductors, Electrical and Optical
Systems and Components

UNITED STATES PATENT AND TRADEMARK OFFICE

Commissioner for Patents
United States Patent and Trademark Office
P.O. Box 1450
Alexandria, VA 22313-1450
www.uspto.gov

Robert E. Krebs
Thelen Reid & Priest LLP
P.O. Box 640640
San Jose CA 95164-0640

COPY MAILED

JUN 0 3 2004

OFFICE OF PETITIONS

In re Application of :
Ronald Meck :
Application No. 09/564,548 : DECISION ON PETITION
Filed: May 4, 2000 :
Attorney Docket No. 034942-188 :

This is a decision on the petition under 37 CFR §1.137(b), filed February 2, 2004.

Any request for reconsideration must be submitted within TWO (2) MONTHS from the mail date of this decision. Extensions of time under 37 CFR 1.136(a) are permitted. The reconsideration request should include a cover letter entitled "Renewed Petition under 37 CFR 1.137(b)." This is **not** final agency action within the meaning of 5 U.S.C. §704.

This petition is hereby **Dismissed**.

This above-identified application became abandoned for failure to timely file a proper response to a final Office Action which was mailed on October 19, 2001. The final Office Action set a three (3) month shortened statutory period for reply. No extension of time were obtained under the provisions of 37 CFR §1.136(a). Accordingly, this application became abandoned on January 20, 2002. This decision precedes the mailing of a Notice of Abandonment . A decision dismissing a petition to withdraw the holding of abandonment was mailed on August 13, 2003.

A grantable petition under 37 CFR 1.137(b) must be accompanied by: (1) the required reply, unless previously filed; (2) the petition fee as set forth in 37 CFR 1.17(m); (3) a statement that the entire delay in filing the required reply from the due date for the reply until the filing of a grantable petition pursuant to 37 CFR 1.137(b) was unintentional; and (4) any terminal disclaimer (and fee as set forth in 37 CFR 1.20(d)) required by 37 CFR 1.137©). Where there is a question as to whether either the abandonment or the delay in filing a petition under 37 CFR 1.137 was unintentional, the Commissioner may require additional information. See MPEP 711.03 (c)(III)©) and (D).

The instant petition lacks item (1). Petitioner provided a request for RCE, the submission and authorization to charge deposit account no. 50-1788 the RCE fee. However, when the RCE fee was processed, it was discovered that the deposit account is no longer active. Accordingly, the RCE fee has not been provided.

On renewed petition, the RCE fee should be provided.

Further Correspondence with respect to this matter should be addressed as follows:

By mail:	Mail Stop Petition Commissioner for Patents P.O. Box 1450 Alexandria, VA 22313-1450
By facsimile:	(703) 872-9306
By delivery service: (FedEx, UPS, DHL, etc.)	U.S. Patent and Trademark Office 2011 South Clark Place Customer Window, Mail Stop Petition Crystal Plaza Two, Lobby, Room 1B03 Arlington, VA 22202

Telephone inquiries concerning this matter should be directed to the undersigned at (703) 306-0251.

Charlema R. Grant

Charlema R. Grant
Petitions Attorney
Office of Petitions

UNITED STATES PATENT AND TRADEMARK OFFICE

Commissioner for Patents
United States Patent and Trademark Office
P.O. Box 1450
Alexandria, VA 22313-1450
www.uspto.gov

OIPE JC113 JUL 0 6 2004 PATENT & TRADEMARK OFFICE

CANCELLED

RECEIVED JUN 0 8 2004 THELEN REID & PRIEST LLP

RECEIVED JUL 0 9 2004 OFFICE OF PETITIONS

Robert E. Krebs
Thelen Reid & Priest LLP
P.O. Box 640640
San Jose CA 95164-0640

COPY MAILED

JUN 0 3 2004

OFFICE OF PETITIONS

In re Application of :
Ronald Meck :
Application No. 09/564,548 : DECISION ON PETITION
Filed: May 4, 2000 :
Attorney Docket No. 034942-188 :

DOCKETED JUN 1 1 2004

This is a decision on the petition under 37 CFR §1.137(b), filed February 2, 2004.

Any request for reconsideration must be submitted within TWO (2) MONTHS from the mail date of this decision. Extensions of time under 37 CFR 1.136(a) are permitted. The reconsideration request should include a cover letter entitled "Renewed Petition under 37 CFR 1.137(b)." This is **not** final agency action within the meaning of 5 U.S.C. §704.

This petition is hereby **Dismissed**.

This above-identified application became abandoned for failure to timely file a proper response to a final Office Action which was mailed on October 19, 2001. The final Office Action set a three (3) month shortened statutory period for reply. No extension of time were obtained under the provisions of 37 CFR §1.136(a). Accordingly, this application became abandoned on January 20, 2002. This decision precedes the mailing of a Notice of Abandonment . A decision dismissing a petition to withdraw the holding of abandonment was mailed on August 13, 2003.

A grantable petition under 37 CFR 1.137(b) must be accompanied by: (1) the required reply, unless previously filed; (2) the petition fee as set forth in 37 CFR 1.17(m); (3) a statement that the entire delay in filing the required reply from the due date for the reply until the filing of a grantable petition pursuant to 37 CFR 1.137(b) was unintentional; and (4) any terminal disclaimer (and fee as set forth in 37 CFR 1.20(d)) required by 37 CFR 1.137©). Where there is a question as to whether either the abandonment or the delay in filing a petition under 37 CFR 1.137 was unintentional, the Commissioner may require additional information. See MPEP 711.03 (c)(III)©) and (D).

The instant petition lacks item (1). Petitioner provided a request for RCE, the submission and authorization to charge deposit account no. 50-1788 the RCE fee. However, when the RCE fee was processed, it was discovered that the deposit account is no longer active. Accordingly, the RCE fee has not been provided.

On renewed petition, the RCE fee should be provided.

Mail log_____ Date_____

CPI_____ Date_____

Excel_____ Date_____

Further Correspondence with respect to this matter should be addressed as follows:

By mail:	Mail Stop Petition Commissioner for Patents P.O. Box 1450 Alexandria, VA 22313-1450
By facsimile:	(703) 872-9306
By delivery service: (FedEx, UPS, DHL, etc.)	U.S. Patent and Trademark Office 2011 South Clark Place Customer Window, Mail Stop Petition Crystal Plaza Two, Lobby, Room 1B03 Arlington, VA 22202

Telephone inquiries concerning this matter should be directed to the undersigned at (703) 306-0251.

Charlema R. Grant

Charlema R. Grant
Petitions Attorney
Office of Petitions

UNITED STATES PATENT AND TRADEMARK OFFICE

Commissioner for Patents
United States Patent and Trademark Office
P.O. Box 1450
Alexandria, VA 22313-1450
www.uspto.go

Robert E. Krebs
Thelen Reid & Priest LLP
P.O. Box 640640
San Jose CA 95164-0640

COPY MAILED

JUL 1 5 2004

OFFICE OF PETITIONS

In re Application of	:	
Ronald Meck	:	
Application No. 09/564,548	:	DECISION ON PETITION
Filed: May 4, 2000	:	
Attorney Docket No. 034942-188	:	

This is a decision on the petition under 37 CFR §1.137(b), filed February 2, 2004.

This above-identified application became abandoned for failure to timely file a proper response to a final Office Action which was mailed on October 19, 2001. The final Office Action set a three (3) month shortened statutory period for reply. No extension of time were obtained under the provisions of 37 CFR §1.136(a). Accordingly, this application became abandoned on January 20, 2002. This decision precedes the mailing of a Notice of Abandonment . A decision dismissing a petition to withdraw the holding of abandonment was mailed on August 13, 2003. A petition filed under 37 CFR 1.137(b) was dismissed on June 3, 2004.

The requirements for a grantable petition under 37 CFR §1.137(b) have been met. This petition is hereby **Granted**.

The RCE and the amendment submitted with the instant petition will be forwarded to Technology Center 2800 for further processing.

Telephone inquiries concerning this matter should be directed to the undersigned at (703) 306-0251.

Charlema R. Grant

Charlema R. Grant
Petitions Attorney
Office of Petitions

UNITED STATES PATENT AND TRADEMARK OFFICE

Commissioner for Patents
United States Patent and Trademark Office
P.O. Box 1450
Alexandria, VA 22313-1450
www.uspto.gov

ROBERT E. KREBS
THELEN REID & PRIEST LLP
P.O. BOX 640640
SAN JOSE, CA 95164-0640

COPY MAILED
JUN 0 6 2006
OFFICE OF PETITIONS

In re Application of	:	
Meck, Ronald A.	:	DECISION ON PETITION
Application No. 09/564,548	:	TO WITHDRAW
Filed: May 4, 2000	:	FROM RECORD
Attorney Docket No. 034942-000188	:	

This is a decision on the Request to Withdraw as attorney or agent of record under 37 C.F.R. § 1.36(b), filed October 12, 2005.

The request is **NOT APPROVED** as moot.

A review of the file record indicates that the power of attorney to Robert E. Krebs and the other attorneys of record has been revoked by the assignee of the entire interest of the patent application. Accordingly, the request to withdraw under 37 C.F.R. § 1.36(b) is moot.

All future communications from the Office will continue to be directed to the below-listed address until otherwise notified by applicant.

Telephone inquires concerning this decision should be directed to Petitions Examiner Liana Chase at 571-272- 3206. All other inquires concerning either the examination or status of the application should be directed to the Technology Center.

David Bucci
Petitions Examiner
Office of Petitions

cc:

TROPIAN INC.
20813 STEVENS CREEK BLVD.
CUPERTINO CA 95014

UNITED STATES PATENT AND TRADEMARK OFFICE

Commissioner for Patents
United States Patent and Trademark Office
P.O. Box 1450
Alexandria, VA 22313-1450
www.uspto.gov

McDERMOTT, WILL & EMERY LLP
600 13TH STREET NW
WASHINGTON, DC 20005-3096

COPY MAILED
DEC 29 2006
OFFICE OF PETITIONS

In re Application of	:
Ronald A. Meck	:
Application No. 09/564,548	: DECISION GRANTING PETITION
Filed: May 4, 2000	: UNDER 37 CFR 1.313(c)(2)
Attorney Docket No. US14	:

This is a decision on the petition, filed December 28, 2006, under 37 CFR 1.313(c)(2) to withdraw the above-identified application from issue after payment of the issue fee.

The petition is **GRANTED**.

The above-identified application is withdrawn from issue for consideration of a submission under 37 CFR 1.114 (request for continued examination). See 37 CFR 1.313(c)(2).

Petitioner is advised that the issue fee paid on December 18, 2006 in the above-identified application cannot be refunded. If, however, the above-identified application is again allowed, petitioner may request that it be applied towards the issue fee required by the new Notice of Allowance.[1]

Telephone inquiries should be directed to the undersigned at (571) 272-3218.

This matter is being referred to Technology Center AU 2817 for processing of the request for continued examination under 37 CFR 1.114 and for consideration of the Information Disclosure Statement.

Frances Hicks
Petitions Examiner
Office of Petitions

C:\Documents and Settings\FHicks\My Documents\470\Dec10\564548.wpd

---

[1] *The request to apply the issue fee to the new Notice may be satisfied by completing and returning the new Part B – Fee(s) Transmittal Form (along with any balance due at the time of submission). Petitioner is advised that the Issue Fee Transmittal Form must be completed and timely submitted to avoid abandonment.*

SPE RESPONSE FOR CERTIFICATE OF CORRECTION

Paper No.: _____

DATE : July 7, 2006

TO SPE OF : ART UNIT 1644

SUBJECT : Request for Certificate of Correction for Appl. No.: 09/564583 Patent No.: 6,986,888

Please respond to this request for a certificate of correction within 7 days.

Please review the requested changes/corrections as shown in the **COCIN** document(s) in the IFW application image. No new matter should be introduced, nor should the scope or meaning of the claims be changed.

Please complete the response (see below) and forward the completed response to scanning using document code **COCX**.

Magdalene Talley

Certificates of Correction Branch

703-308-9390 ext. 116

Thank You For Your Assistance

The request for issuing the above-identified correction(s) is hereby:

Note your decision on the appropriate box.

- ☑ **Approved** — All changes apply.
- ☐ **Approved in Part** — Specify below which changes **do not** apply.
- ☐ **Denied** — State the reasons for denial below.

Comments: _____

Christina Chan 1644

SPE **Art Unit**

UNITED STATES PATENT AND TRADEMARK OFFICE

UNITED STATES DEPARTMENT OF COMMERCE
United States Patent and Trademark Office
Address: COMMISSIONER FOR PATENTS
P.O. Box 1450
Alexandria, Virginia 22313-1450
www.uspto.gov

March 31, 2004

G. Lloyd Knight
Pillsbury Winthrop
1600 Tysons Blvd.
McLean, VA 22102

In re application of
Hakalehto DECISION ON PETITION
Serial No.: 09/564,644
Filed: May 3, 2000
For: METHOD AND APPARATUS FOR CONCENTRATING AND SEARCHING OF MICROBIOLOGICAL SPECIMENS

This is a decision on the petitions received on June 3, 2002, to withdraw the holding of abandonment in the above-identified application.

The above-identified application became abandoned for failure to reply within the meaning of 37 C.F.R. 1.113 in timely manner to the Notice to File Missing Parts of Non Provisional Application mailed July 18, 2000. Which set a shortened statutory period for reply of two (2) months. Accordingly, this application became abandoned September 19, 2000. The notice of abandonment was mailed April 4, 2002.

On June 3, 2002, the office received a communication from the attorney of record. Enclosed was an acknowledgement that the attorney never received the Notice to File Missing Parts of Non Provisional Application mailed July 18, 2000.

The evidence submitted is sufficient to establish that the petitioners never received the notice to File Missing Parts of Non Provisional Application on July 18, 2000.

The petition is hereby GRANTED.

The application will be completed with the documents received on June 3, 2002 and released to Technology Center 1641.

The office regrets any inconvenience this may have caused the client.

Telephone inquiries concerning this matter may be directed to Doshie E. Day at (703) 308-3640.

Doshie Day

Doshie E. Day
Program Management Assistant

Office Initial Patent Examination

BEST AVAILABLE COPY

UNITED STATES PATENT AND TRADEMARK OFFICE

Commissioner for Patents
United States Patent and Trademark Office
P.O. Box 1450
Alexandria, VA 22313-1450
www.uspto.gov

wk

Mailed: 8/14/06

In re application of	:	
Elias Hakalehto	:	DECISION ON
Serial No. 09/564,644	:	PETITION
Filed: May 3, 2000	:	
For: Method and Apparatus For Concentrating And Searching Of Microbiological Specimens	:	

This is a response to the PETITION UNDER RULE 37 C.F.R. 1.181(a) TO WITHDRAW NOTICE OF ABANDONMENT, filed March 4, 2005. The petition requests that the abandonment, as set forth in the Notice of Abandonment mailed January 11, 2005, be withdrawn.

DECISION

The instant request is accepted as a timely petition under 37 C.F.R. 1.181 (no fee). The examiner mailed an office action on July 2, 2004 and applicants filed a response via fax on January 3, 2005 with a petition for an extension of time. Applicant has provided proof that the Office received the response.

The Petition is **GRANTED**.

The abandonment is withdrawn, applicant's response of January 3, 2005 will be entered into the file, the extension of time will be charged and the application will be forwarded to the examiner for consideration of applicant's response.

Jacqueline M. Stone

Jacqueline Stone, Director
Technology Center 1700
Chemical and Materials Engineering

Thomas A. Cawley, Jr., Ph.D.
Pillsbury Winthrop LLP
P.O. Box 10500
McLean, VA 22102

UNITED STATES PATENT AND TRADEMARK OFFICE

Commissioner for Patents
United States Patent and Trademark Office
P.O. Box 1450
Alexandria, VA 22313-1450
www.uspto.gov

PILLSBURY WINTHROP
SHAW PITTMAN, LLP
P.O. BOX 10500
MCLEAN VA 22102

COPY MAILED
SEP 08 2008
OFFICE OF PETITIONS

In re Application of	:	
Hakalehto	:	
Application No. 09/564,644	:	DECISION
Filed: 3 May, 2000	:	
Attorney Docket No. 033822-0270588	:	
	:	

This is a decision on the petition, filed 9 June, 2008, considered as a petition under 37 C.F.R. §1.181 (no fee) requesting withdrawal of the holding of abandonment in the above-identified application.

The petition as considered under 37 C.F.R. §1.181 is **GRANTED**.

As to the Request to Withdraw
the Holding of Abandonment

A proper showing (for relief under 37 C.F.R. §1.181):

- (as to non-receipt) requires at the very minimum: a statement from practitioner stating that the Office action was not received by the practitioner; a statement from the practitioner attesting to the fact that a search of the file jacket and docket records for the application indicates that the Office action was not received with a copy of those docket records; and a brief statement of the calendaring process and a copy of the due-date (calendar) docket record(s) where the nonreceived Office action would have been scheduled for reply had it been received must be attached to and referenced in the practitioner's statement; alternatively,

- (for a showing of timely and proper reply) requires a statement from practitioner stating that the reply was timely submitted by the practitioner; and copies of all papers submitted as and/or in support of that reply, with/and a copy of the date-stamped receipt card, Office FAX receipt acknowledgement (not simply Petitioner's FAX transmittal), or EFS receipt acknowledgment from the Office, along with practitioner's attestation as to the correctness/completeness of his/her records.

The showing(s) must include that of the person(s) with first-hand knowledge and an acknowledgment by the Petitioner that he/she has reviewed that information in compliance with his/her duty of candor to the Office.

Petitioners' attentions always are drawn to guidance in the Commentary at MPEP §711.03(c).[1]

---

[1] The Commentary at MPEP §711.03(c) provides in pertinent part:

*****

I. PETITION TO WITHDRAW HOLDING OF ABANDONMENT

A petition to revive an abandoned application (discussed below) should not be confused with a petition from an examiner's holding of abandonment. Where an applicant contends that the application is not in fact abandoned (e.g., there is disagreement as to the sufficiency of the reply, or as to controlling dates), a petition under 37 C.F.R. 1.181(a) requesting withdrawal of the holding of abandonment is the appropriate course of action, and such petition does not require a fee. Where there is no dispute as to whether an application is abandoned (e.g., the applicant's contentions merely involve the cause of abandonment), a petition under 37 C.F.R. 1.137 (accompanied by the appropriate petition fee) is necessary to revive the abandoned application.

Two additional procedures are available for reviving an application that has become abandoned due to a failure to reply to an Office Action: (1) a petition under 37 C.F.R. 1.137(a) based on unavoidable delay; and (2) a petition under 37 C.F.R. 1.137(b) based on unintentional delay.

A. Petition To Withdraw Holding of Abandonment Based on Failure To Receive Office Action

In *Delgar v. Schulyer*, 172 USPQ 513 (D.D.C. 1971), the court decided that the Office should mail a new Notice of Allowance in view of the evidence presented in support of the contention that the applicant's representative did not receive the original Notice of Allowance. Under the reasoning of *Delgar*, an allegation that an Office action was never received may be considered in a petition to withdraw the holding of abandonment. If adequately supported, the Office may grant the petition to withdraw the holding of abandonment and remail the Office action. That is, the reasoning of *Delgar* is applicable regardless of whether an application is held abandoned for failure to timely pay the issue fee (35 U.S.C. 151) or for failure to prosecute (35 U.S.C. 133).

To minimize costs and burdens to practitioners and the Office, the Office has modified the showing required to establish nonreceipt of an Office action. The showing required to establish nonreceipt of an Office communication must include a statement from the practitioner **>describing the system used for recording an Office action received at the correspondence address of record with the USPTO. The statement should establish that the docketing system is sufficiently reliable. It is expected that the record would include, but not be limited to, the application number, attorney docket number, the mail date of the Office action and the due date for the response.

Practitioner must state that the Office action was not received at the correspondence address of record, and that a search of the practitioner's record(s), including any file jacket or the equivalent, and the application contents, indicates that the Office action was not received. A copy of the record(s) used by the practitioner where the non-received Office action would have been entered had it been received is required.

A copy of the practitioner's record(s) required to show non-receipt of the Office action should include the master docket for the firm. That is, if a three month period for reply was set in the nonreceived Office action, a copy of the master docket report showing all replies docketed for a date three months from the mail date of the nonreceived Office action must be submitted as documentary proof of nonreceipt of the Office action. If no such master docket exists, the practitioner should so state and provide other evidence such as, but not limited to, the following: the application file jacket; incoming mail log; calendar; reminder system; or the individual docket record for the application in question.<

The showing outlined above may not be sufficient if there are circumstances that point to a conclusion that the Office action may have been lost after receipt rather than a conclusion that the Office action was lost in the mail (e.g., if the practitioner has a history of not receiving Office actions).

Evidence of nonreceipt of an Office communication or action (e.g., Notice of Abandonment or an advisory action) other than that action to which reply was required to avoid abandonment would not warrant withdrawal of the holding of abandonment. Abandonment takes place by operation of law for failure to reply to an Office action or timely pay the issue fee, not by operation of the mailing of a Notice of Abandonment. See *Lorenz v. Finkl*, 333 F.2d 885, 889-90, 142 USPQ 26, 29-30 (CCPA 1964); *Krahn v. Commissioner*, 15 USPQ2d 1823, 1824 (E.D. Va 1990); *In re Application of Fischer*, 6 USPQ2d 1573, 1574 (Comm'r Pat. 1988).

B. Petition To Withdraw Holding of Abandonment Based on Evidence That a Reply Was Timely Mailed or Filed

37 C.F.R. 1.10(c) through 1.10(e) and 1.10(g) set forth procedures for petitioning the Director of the USPTO to accord a filing date to correspondence as of the date of deposit of the correspondence as "Express Mail." A petition to withdraw the holding of abandonment relying upon a timely reply placed in "Express Mail" must include an appropriate petition under 37 C.F.R. 1.10(c), (d), (e), or (g) (see MPEP § 513). When a paper is shown to have been mailed to the Office using the "Express Mail" procedures, the paper must be entered in PALM with the "Express Mail" date.

Petitioner seeks to provide the documentation in compliance with the Commentary at MPEP §711.03(c)(A) and/or (B) as it is set forth on the website (and included for reference herein).

BACKGROUND

The record reflects as follows:

Petitioner failed to reply timely and properly to the non-final Office action mailed on 20 November, 2007, with a reply due absent extension of time on or before 20 February, 2008.

The application went abandoned by operation of law after midnight 20 February, 2008.

The Office mailed the Notice of Abandonment on 29 May, 2008.

On 9 June, 2008, Petitioner filed the petition requesting withdrawal of the holding of abandonment under 37 C.F.R. §1.181 averring timely filing supported, *inter alia*, with an averment of timely filing, a copy of the dated ("20 MAY 2008") electronic receipt acknowledgement and a copy of the reply in the form of an amendment, along with a fee and request for extension of time (which Office records reflect was charged as authorized to Deposit Account 03-3975).

Similarly, applicants may establish that a reply was filed with a postcard receipt that properly identifies the reply and provides *prima facie* evidence that the reply was timely filed. See MPEP § 503. For example, if the application has been held abandoned for failure to file a reply to a first Office action, and applicant has a postcard receipt showing that an amendment was timely filed in response to the Office action, then the holding of abandonment should be withdrawn upon the filing of a petition to withdraw the holding of abandonment. When the reply is shown to have been timely filed based on a postcard receipt, the reply must be entered into PALM using the date of receipt of the reply as shown on the post card receipt.

Where a certificate of mailing under 37 C.F.R. 1.8, but not a postcard receipt, is relied upon in a petition to withdraw the holding of abandonment, see 37 C.F.R. 1.8(b) and MPEP § 512. As stated in 37 C.F.R. 1.8(b)(3) the statement that attests to the previous timely mailing or transmission of the correspondence must be on a personal knowledge basis, or to the satisfaction of the Director of the USPTO. If the statement attesting to the previous timely mailing is not made by the person who signed the Certificate of Mailing (i.e., there is no personal knowledge basis), then the statement attesting to the previous timely mailing should include evidence that supports the conclusion that the correspondence was actually mailed (e.g., copies of a mailing log establishing that correspondence was mailed for that application). When the correspondence is shown to have been timely filed based on a certificate of mailing, the correspondence is entered into PALM with the actual date of receipt (i.e., the date that the duplicate copy of the papers was filed with the statement under 37 C.F.R. 1.8).

37 C.F.R. 1.8(b) also permits applicant to notify the Office of a previous mailing or transmission of correspondence and submit a statement under 37 C.F.R. 1.8(b)(3) accompanied by a duplicate copy of the correspondence when a reasonable amount of time (e.g., more than one month) has elapsed from the time of mailing or transmitting of the correspondence. Applicant does not have to wait until the application becomes abandoned before notifying the Office of the previous mailing or transmission of the correspondence. Applicant should check the private Patent Application Information Retrieval (PAIR) system for the status of the correspondence before notifying the Office. See MPEP §512.

C. Treatment of Untimely Petition To Withdraw Holding of Abandonment

37 C.F.R. 1.181(f) provides that, *inter alia*, except as otherwise provided, any petition not filed within 2 months from the action complained of may be dismissed as untimely. Therefore, any petition (under 37 C.F.R. 1.181) to withdraw the holding of abandonment not filed within 2 months of the mail date of a notice of abandonment (the action complained of) may be dismissed as untimely. 37 C.F.R. 1.181(f).
Rather than dismiss an untimely petition to withdraw the holding of abandonment under 37 C.F.R. 1.181(f), the Office may require a terminal disclaimer as a condition of granting an untimely petition to withdraw the holding of abandonment.

*****

Petitioner's showing appears to comply with the guidance in the Commentary at MPEP §711.03(c).

Out of an abundance of caution, Petitioners always are reminded that the filing of a petition under 37 C.F.R. §1.181 does not toll any periods that may be running any action by the Office and a petition seeking relief under the regulation must be filed within two (2) months of the act complained of (see: 37 C.F.R. §1.181(f)), and that those registered to practice and all others who make representations before the Office are reminded to inquire into the underlying facts of representations made to the Office and support averments with the appropriate documentation–since all owe to the Office the continuing duty to disclose.[2]

The availability of applications and application papers online to applicants/practitioners who diligently associate their Customer Number with the respective application(s) now provides an applicant/practitioner on-demand information as to events/transactions in an application.

Allegations as to the Request to
Withdraw the Holding of Abandonment

The courts have determined the construct for properly supporting a petition seeking withdrawal of a holding of abandonment.[3] (See, also, the commentary at MPEP §711.03(c)(I)(A) and (B).)

And the regulation requires that relief be sought within two (2) months of the act complained of.

Petitioner appears to have satisfied the showing requirements as discussed hereinabove.

CONCLUSION

The petition under 37 C.F.R. §1.181 is **granted**, and the 29 May, 2008, Notice of Abandonment is **vacated**.

The instant application is released to the Technology Center/AU 3723 for further processing in due course.

Petitioner may find it beneficial to view Private PAIR within a fortnight of the instant decision to ensure that the revival has been acknowledged by the Technology Center/AU in response to this decision—and it is noted that all inquiries with regard to that change in status should be directed to the Technology Center/AU where that change of status must be effected.

---

[2] See supplement of 17 June, 1999. The Patent and Trademark Office is relying on Petitioner's duty of candor and good faith and accepting a statement made by Petitioner. See Changes to Patent Practice and Procedure, 62 Fed. Reg. at 53160 and 53178, 1203 Off. Gaz. Pat. Office at 88 and 103 (responses to comments 64 and 109)(applicant obligated under 37 C.F.R. §10.18 to inquire into the underlying facts and circumstances when providing statements to the Patent and Trademark Office).

[3] See: Delgar v. Schulyer, 172 USPQ 513 (D.D.C. 1971).

While telephone inquiries regarding this decision may be directed to the undersigned at (571) 272-3214, it is noted that all practice before the Office is in writing (see: 37 C.F.R. §1.2[4]) and the proper authority for action on any matter in this regard are the statutes (35 U.S.C.), regulations (37 C.F.R.) and the commentary on policy (MPEP). Therefore, no telephone discussion may be controlling or considered authority for Petitioner's action(s).

/ John J. Gillon, Jr./
John J. Gillon, Jr.
Senior Attorney
Office of Petitions

[4] The regulations at 37 C.F.R. §1.2 provide:
§1.2 Business to be transacted in writing.
All business with the Patent and Trademark Office should be transacted in writing. The personal attendance of applicants or their attorneys or agents at the Patent and Trademark Office is unnecessary. The action of the Patent and Trademark Office will be based exclusively on the written record in the Office. No attention will be paid to any alleged oral promise, stipulation, or understanding in relation to which there is disagreement or doubt.

UNITED STATES PATENT AND TRADEMARK OFFICE

Commissioner for Patents
United States Patent and Trademark Office
P.O. Box 1450
Alexandria, VA 22313-1450
www.uspto.gov

MAILED

JUN 22 2009

OFFICE OF PETITIONS

MORRIS REESE
P O BOX 6651
THOUSAND OAKS CA 91359-6651

In re Application of	:	Paper No. 6
Morris REESE	:	
Application No. 09/564,666	:	DECISION ON PETITION
Filed: May 03, 2000	:	
Attorney Docket No.	:	

This is a decision on the petition under the unintentional provisions of 37 CFR 1.137(b), filed March 30, 2009, to revive the above-identified application.

The petition is **DISMISSED**.

Any request for reconsideration of this decision must be submitted within TWO (2) MONTHS from the mail date of this decision. Extensions of time under 37 CFR 1.136(a) are permitted. The reconsideration request should include a cover letter entitled "Renewed Petition under 37 CFR 1.137(b)." This is **not** a final agency action within the meaning of 5 U.S.C. § 704.

The application became abandoned for failure to timely pay the issue fee on or before December 23, 2002, as required by the Notice of Allowance and Fee(s) Due, mailed September 23, 2002, which set a statutory period for reply of three (3) months. Accordingly, the application became abandoned on December 24, 2002.

A grantable petition under 37 CFR 1.137(b) must be accompanied by: (1) the required reply, unless previously filed; (2) the petition fee as set forth in 37 CFR 1.17(m); (3) a statement that the entire delay in filing the required reply from the due date for the reply until the filing of a grantable petition pursuant to 37 CFR 1.137(b) was unintentional; and (4) any terminal

disclaimer (and fee as set forth in 37 CFR 1.20(d)) required by 37 CFR 1.137(d). Where there is a question as to whether either the abandonment or the delay in filing a petition under 37 CFR 1.137 was unintentional, the Director may require additional information. *See* MPEP 711.03(c)(II)(C) and (D). The instant petition lacks item (3).

There are three periods to be considered during the evaluation of a petition under 37 CFR 1.137(b):

(1) the delay in reply that originally resulted in the abandonment;

(2) the delay in filing an initial petition pursuant to 37 CFR 1.137(b) to revive the application; and

(3) the delay in filing a grantable petition pursuant to 37 CFR 1.137(b) to revive the application.

Currently, the delay has not been shown to the satisfaction of the Director to be unintentional for periods (1) and (2).

As to Period (1):

The patent statute at 35 U.S.C. § 41(a)(7) authorizes the Director to revive an "unintentionally abandoned application." The legislative history of Public Law 97-247 reveals that the purpose of 35 U.S.C. § 41(a)(7) is to permit the Office to have more discretion than in 35 U.S.C. §§ 133 or 151 to revive abandoned applications in appropriate circumstances, but places a limit on this discretion, stating that "[u]nder this section a petition accompanied by either a fee of $500 or a fee of $50 **would not be granted where the abandonment** or the failure to pay the fee for issuing the patent **was intentional** as opposed to being unintentional or unavoidable." [emphasis added]. See H.R. Rep. No. 542, 97th Cong., 2d Sess. 6-7 (1982), *reprinted in* 1982 U.S.C.C.A.N. 770-71. The revival of an intentionally abandoned application is antithetical to the meaning and intent of the statute and regulation.

35 U.S.C. § 41(a)(7) authorizes the Director to accept a petition "for the revival of an unintentionally abandoned application for a patent." As amended December 1, 1997, 37 CFR 1.137(b)(3) provides that a petition under 37 CFR 1.137(b) must be accompanied by a statement that the delay was unintentional, but provides that "[t]he Commissioner may require additional information where there is a question whether the delay was unintentional." Where, as here, there is a question whether the

initial delay was unintentional, the petitioner must meet the burden of establishing that the delay was unintentional within the meaning of 35 U.S.C. § 41(a)(7) and 37 CFR 1.137(b). *See* In re Application of G, 11 USPQ2d 1378, 1380 (Comm'r Pats. 1989); 37 CFR 1.137(b). Here, in view of the inordinate delay (over 6 years) in resuming prosecution, there is a question whether the entire delay was unintentional. Petitioner should note that the issue is not whether some of the delay was unintentional by any party; rather, the issue is whether the entire delay has been shown to the satisfaction of the Director to be unintentional.

The question under 37 CFR 1.137(b) for period (1) is whether the delay on the part of the party having the right or authority to reply to avoid abandonment (or not reply) was unintentional. Accordingly, any renewed petition must clearly identify the party having the right to reply to avoid abandonment on December 24, 2006. That party, in turn must explain what effort(s) was made to further reply to the outstanding Office action and, further, why no reply was filed. If no effort was made to further reply, then that party must explain why the delay in this application does not result from a deliberate course of action (or inaction). As the application was filed pro se, the inventor should explain why this application became abandoned while it was under his control and what efforts the inventor made to further reply and with whom this matter was discussed. A Notice of Abandonment was mailed January 29, 2003. Was the Notice of Abandonment received in the application file? When did the inventor become aware of the abandonment of this application?

Copies of any correspondence relating to the filing, or to not filing a further reply to the outstanding Office action are required from responsible person(s) involved with this application at the time of abandonment. Statements are required from the person(s) having firsthand knowledge of the circumstances surrounding the lack of a reply to the outstanding Office action. As the courts have made clear, it is pointless for the USPTO to revive a long abandoned application without an adequate showing that the delay did not result from a deliberate course of action. *See* Lawman Armor v. Simon, 2005 U.S. Dist. LEXIS 10843, 74 USPQ2d 1633 (DC EMich 2005); Field Hybrids, LLC v. Toyota Motor Corp., 2005 U.S. Dist. LEXIS 1159 (D. Minn Jan. 27, 2005); Lumenyte Int'l Corp. v. Cable Lite Corp., Nos. 96-1011, 96-1077, 1996 U.S. App. LEXIS 16400, 1996 WL 383927 (Fed. Cir. July 9, 1996) (unpublished) (patents held unenforceable due to a finding of inequitable conduct in submitting an inappropriate statement that the abandonment was unintentional).

As to Period (2):

Likewise, where the applicant deliberately chooses not to seek or persist in seeking the revival of an abandoned application, or where the applicant deliberately chooses to delay seeking the revival of an abandoned application, the resulting delay in seeking revival of the abandoned application cannot be considered as "unintentional" within the meaning of 37 CFR 1.137(b). *See* MPEP 711.03(c).

The language of both 35 U.S.C. § 41(a)(7) and 37 CFR 1.137(b) are clear and unambiguous, and, furthermore, without qualification. That is, the delay in filing the reply during prosecution, as well as in filing the petition seeking revival, must have been, without qualification, "unintentional" for the reply to now be accepted on petition. The Office requires that the entire delay be at least unintentional as a prerequisite to revival of an abandoned application to prevent abuse and injury to the public. *See* H.R. Rep. No. 542, 97th Cong., 2d Sess. 7 (1982), reprinted in 1982 U.S.C.C.A.N. 771 ("[i]n order to prevent abuse and injury to the public the Commissioner . . . could require applicants to act promptly after becoming aware of the abandonment"). The December 1997 change to 37 CFR 1.137 did not create any new right to overcome an intentional delay in seeking revival, or in renewing an attempt at seeking revival, of an abandoned application. *See* Changes to Patent Practice and Procedure; Final Rule Notice, 62 Fed. Reg. 53131, 53160 (October 10, 1997), 1203 Off. Gaz. Pat. Office 63, 87 (October 21, 1997), which clearly stated that any protracted delay (here, over 6 years) could trigger, as here, a request for additional information. As the courts have since made clear, a protracted delay in seeking revival, as here, requires a petitioner's detailed explanation seeking to excuse the delay as opposed to USPTO acceptance of a general allegation of unintentional delay. *See* Lawman Armor v. Simon, 2005 U.S. Dist. LEXIS 10843, 74 USPQ2d 1633, at 1637-8 (DC EMich 2005); Field Hybrids, LLC v. Toyota Motor Corp., 2005 U.S. Dist. LEXIS 1159 (D. Minn Jan. 27, 2005) at *21-*23. Statements are required from the responsible person(s)having firsthand knowledge of the circumstances surrounding the protracted delay, after the abandonment date, in seeking revival.

Any renewed petition may be addressed as follows:

By Mail: Mail Stop PETITION
Commissioner for Patents
P. O. Box 1450
Alexandria, VA 22313-1450

By hand: U. S. Patent and Trademark Office
Customer Service Window, Mail Stop Petitions
Randolph Building
401 Dulany Street
Alexandria, VA 22314

The centralized facsimile number is **(571) 273-8300.**

Telephone inquiries concerning this decision should be directed to Tredelle Jackson at (571) 272-2783.

Ramesh Krishnamurthy

Ramesh Krishnamurthy
Petitions Examiner
Office of Petitions

UNITED STATES PATENT AND TRADEMARK OFFICE

Commissioner for Patents
United States Patent and Trademark Office
P.O. Box 1450
Alexandria, VA 22313-1450
www.uspto.gov

COPY MAILED
DEC 15 2009
OFFICE OF PETITIONS

LAW OFFICE OF DAVID H. JUDSON
15950 DALLAS PARKWAY
SUITE 225
DALLAS TX 75248

In re Application of	:	Paper No. 8
Morris REESE	:	
Application No. 09/564,666	:	DECISION ON PETITION
Filed: May 03, 2000	:	
Attorney Docket No.	:	

This is a decision on the renewed petition under the unintentional provisions of 37 CFR 1.137(b), filed August 24, 2009, to revive the above-identified application.

The petition is **GRANTED**.

This application became abandoned for failure to timely pay the issue on or before December 23, 2002, as required by the Notice of Allowance and Fee(s) Due, mailed September 23, 2002. Accordingly, the date of abandonment of this application is December 24, 2002.

The petition satisfies the requirements of 37 CFR 1.137(b) in that petitioner has supplied (1) the reply in the form of payment of the issue fee of $755, (2) the petition fee of $810; and (3) a proper statement of unintentional delay. Accordingly, the Issue Fee is accepted as having been unintentionally delayed.

The power of attorney is accepted and has been made of record.

Telephone inquiries concerning this decision should be directed to Tredelle Jackson at (571) 272-2783.

This application is being referred to the Office of Data Management for processing into a patent.

Ramesh Krishnamurthy

Ramesh Krishnamurthy
Petitions Examiner
Office of Petitions

UNITED STATES PATENT AND TRADEMARK OFFICE

Commissioner for Patents
United States Patent and Trademark Office
P.O. Box 1450
Alexandria, VA 22313-1450
www.uspto.gov

In re Patent No. 6197129
Issue Date: March 6,2001
Application No. 09564696
Filed: May 4,2000
Attorney Docket No. S-94639

:
:DECISION GRANTING PETITION
:UNDER 37 CFR 1.378(c)
:

This is a decision on the electronic petition, filed September 30,2009 ,under 37 CFR 1.378(c) to accept the unintentionally delayed payment of the 7.5 year maintenance fee for the above-identified patent.

The petition is **GRANTED**.

The maintenance fee is accepted, and the above-identified patent reinstated as of September 30,2009 . This decision also constitutes notice that the fee has been accepted. An electronic copy of the petition and this decision has been created as an entry in the Image File Wrapper. Nevertheless, petitioner should print and retain an independent copy.

Telephone inquiries related to this electronic decision should be directed to the Electronic Business Center at 1-866-217-9197.

PTO/SB/66 (03-09)
Approved for use through 03/31/2012. OMB 0651-0016
U.S. Patent and Trademark Office: U.S. DEPARTMENT OF COMMERCE
Under the Paperwork Reduction Act of 1995, no persons are required to respond to a collection of information unless it displays valid OMB control number.

PETITION TO ACCEPT UNINTENTIONALLY DELAYED PAYMENT OF MAINTENANCE FEE IN AN EXPIRED PATENT (37 CFR 1.378(c))

Patent Number	Issue Date (YYYY-MM-DD)	Application Number	Filing Date (YYYY-MM-DD)	Docket Number (if applicable)
6,197,129	2001-03-06	09/564,696	2000-05-04	S-94,639

CAUTION: Maintenance fee (and surcharge, if any) payment must correctly identify: (1) the patent number and (2) the application number of the actual U.S. application leading to issuance of that patent to ensure the fee(s) is/are associated with the correct patent. 37 CFR 1.366(c) and (d).

SMALL ENTITY

☐ Patentee claims, or has previously claimed, small entity status. See 37 CFR 1.27.

LOSS OF ENTITLEMENT TO SMALL ENTITY STATUS

☒ Patentee is no longer entitled to small entity status. See 37 CFR 1.27(g)

NOT Small Entity			Small Entity		
	Fee	Code		Fee	Code
○	3 ½ year	(1551)	○	3 ½ year	(2551)
◉	7 ½ year	(1552)	○	7 ½ year	(2552)
○	11 ½ year	(1553)	○	11 ½ year	(2553)

SURCHARGE

The surcharge required by 37 CFR 1.20(i)(2) (Fee Code 1558) must be paid as a condition of accepting unintentionally delayed payment of the maintenance fee.

MAINTENANCE FEE (37 CFR 1.20(e)-(g))

The appropriate maintenance fee must be submitted with this petition.

STATEMENT

THE UNDERSIGNED CERTIFIES THAT THE DELAY IN PAYMENT OF THE MAINTENANCE FEE TO THIS PATENT WAS UNINTENTIONAL

PETITIONER(S) REQUEST THAT THE DELAYED PAYMENT OF THE MAINTENANCE FEE BE ACCEPTED AND THE PATENT REINSTATED

THIS PORTION MUST BE COMPLETED BY THE SIGNATORY OR SIGNATORIES

37 CFR 1.378(d) states: "Any petition under this section must be signed by an attorney or agent registered to practice before the Patent and Trademark Office, or by the patentee, the assignee, or other party in interest."

I certify, in accordance with 37 CFR 1.4(d)(4) that I am

◉ An attorney or agent registered to practice before the Patent and Trademark Office

○ A sole patentee

○ A joint patentee; I certify that I am authorized to sign this submission on behalf of all the other patentees.

○ A joint patentee; all of whom are signing this e-petition

○ The assignee of record of the entire interest

Patent Practitioner			
A signature of the applicant or representative is required in accordance with 37 CFR 1.33 and 10.18. Please see 37 CFR 1.4(d) for the form of the signature			
Signature	/Meredith H. Schoenfeld/	Date (YYYY-MM-DD)	2009-09-30
Name	Meredith H. Schoenfeld	Registration Number	52418

This collection of information is required by 37 CFR 1.378(c). The information is required to obtain or retain a benefit by the public which is to file (and by the USPTO to process) an application. Confidentiality is governed by 35 U.S.C. 122 and 37 CFR 1.11 and 1.14. This collection is estimated to take 1 hour to complete, including gathering, preparing, and submitting the completed application form to the USPTO. Time will vary depending upon the individual case. Any comments on the amount of time you require to complete this form and/ or suggestions for reducing this burden, should be sent to the Chief Information Officer, U.S. Patent and Trademark Office, U.S. Department of Commerce, P.O. Box 1450, Alexandria, VA 22313-1450. DO NOT SEND FEES OR COMPLETED FORMS TO THIS ADDRESS. **This form can only be used when in conjunction with EFS-Web. If this form is mailed to the USPTO, it may cause delays in reinstating the patent.**

Privacy Act Statement

The Privacy Act of 1974 (P.L. 93-579) requires that you be given certain information in connection with your submission of the attached form related to a patent application or patent. Accordingly, pursuant to the requirements of the Act, please be advised that: (1) the general authority for the collection of this information is 35 U.S.C. 2(b)(2); (2) furnishing of the information solicited is voluntary; and (3) the principal purpose for which the information is used by the U.S. Patent and Trademark Office is to process and/or examine your submission related to a patent application or patent. If you do not furnish the requested information, the U.S. Patent and Trademark Office may not be able to process and/or examine your submission, which may result in termination of proceedings or abandonment of the application or expiration of the patent.

The information provided by you in this form will be subject to the following routine uses:

1. The information on this form will be treated confidentially to the extent allowed under the Freedom of Information Act (5 U.S.C. 552) and the Privacy Act (5 U.S.C. 552a). Records from this system of records may be disclosed to the Department of Justice to determine whether the Freedom of Information Act requires disclosure of these records.

2. A record from this system of records may be disclosed, as a routine use, in the course of presenting evidence to a court, magistrate, or administrative tribunal, including disclosures to opposing counsel in the course of settlement negotiations.

3. A record in this system of records may be disclosed, as a routine use, to a Member of Congress submitting a request involving an individual, to whom the record pertains, when the individual has requested assistance from the Member with respect to the subject matter of the record.

4. A record in this system of records may be disclosed, as a routine use, to a contractor of the Agency having need for the information in order to perform a contract. Recipients of information shall be required to comply with the requirements of the Privacy Act of 1974, as amended, pursuant to 5 U.S.C. 552a(m).

5. A record related to an International Application filed under the Patent Cooperation Treaty in this system of records may be disclosed, as a routine use, to the International Bureau of the World Intellectual Property Organization, pursuant to the Patent Cooperation Treaty.

6. A record in this system of records may be disclosed, as a routine use, to another federal agency for purposes of National Security review (35 U.S.C. 181) and for review pursuant to the Atomic Energy Act (42 U.S.C. 218(c)).

7. A record from this system of records may be disclosed, as a routine use, to the Administrator, General Services, or his/her designee, during an inspection of records conducted by GSA as part of that agency's responsibility to recommend improvements in records management practices and programs, under authority of 44 U.S.C. 2904 and 2906. Such disclosure shall be made in accordance with the GSA regulations governing inspection of records for this purpose, and any other relevant (i.e., GSA or Commerce) directive. Such disclosure shall not be used to make determinations about individuals.

8. A record from this system of records may be disclosed, as a routine use, to the public after either publication of the application pursuant to 35 U.S.C. 122(b) or issuance of a patent pursuant to 35 U.S.C. 151. Further, a record may be disclosed, subject to the limitations of 37 CFR 1.14, as a routine use, to the public if the record was filed in an application which became abandoned or in which the proceedings were terminated and which application is referenced by either a published application, an application open to public inspections or an issued patent.

9. A record from this system of records may be disclosed, as a routine use, to a Federal, State, or local law enforcement agency, if the USPTO becomes aware of a violation or potential violation of law or regulation.

UNITED STATES PATENT AND TRADEMARK OFFICE

Commissioner for Patents
United States Patent and Trademark Office
P.O. Box 1450
Alexandria, VA 22313-1450
www.uspto.gov

IPSG, P.C.
P.O. BOX 700640
SAN JOSE CA 95170-0640

COPY MAILED

JUN 2 2 2007

OFFICE OF PETITIONS

In re Application of
CHOQUETTE, Jack H.
Application No. 09/564,715
Filed: May 2, 2000
Attorney Docket No. SAND-P011

DECISION ON PETITION
TO WITHDRAW
FROM RECORD

This is a decision on the Request to Withdraw as attorney or agent of record under 37 C.F.R. § 1.36(b), filed August 1, 2006.

The request is **NOT APPROVED**.

A grantable request to withdraw as attorney/agent of record must be signed by every attorney/agent seeking to withdraw or contain a clear indication that one attorney is signing on behalf of another/others. A request to withdraw will not be approved unless at least 30 (thirty) days would remain between the date of approval and the later of the expiration date of a time to file a response or the expiration date of the maximum time period which can be extended under 37 C.F.R. § 1.136(a).

The Office cannot approve the request at this time since the reasons provided do not meet any of the conditions under the mandatory or permissive categories enumerated in 37 CFR 10.40. Section 10.40 of Title 37 of the Code of Federal Regulation states, "[a] practitioner shall not withdraw from employment in a proceeding before the Office without permission from the Office[.]" More specifically, 37 CFR 10.40 states, "[i]f paragraph (b) of this section is not applicable, a practitioner may not request permission to withdraw in matter pending before the Office unless such request or such withdrawal is" for one the permissive reasons listed in 37 CFR 10.40(c). The reasons set forth in the request, "Assignee Raza Microelectronics, Inc. wishes to terminate representation" does not meet any of the conditions set forth in 37 CFR 10.40.

In order to request or take action in a patent matter, the assignee must establish its ownership of the patent to the satisfaction of the Director. In this regard, a Statement under 37 CFR 3.73(b) must have either: (i) documentary evidence of a chain of title from the original owner to the assignee (*e.g.*, copy of an executed assignment), and a statement affirming that the documentary

evidence of the chain of title from the original owner to the assignee was or concurrently is being submitted for recordation pursuant to § 3.11; or (ii) a statement specifying where documentary evidence of a chain of title from the original owner to the assignee is recorded in the assignment records of the Office (*e.g.*, reel and frame number).

All future communications from the Office will continue to be directed to the above-listed address until otherwise notified by applicant.

Telephone inquiries concerning this decision should be directed to the undersigned at 571-272-7253.

Monica A. Graves
Petitions Examiner
Office of Petitions

cc: **RAZA MICROELECTRONICS, INC.**
LEGAL DEPARTMENT
18920 FORGE DRIVE
CUPERTINO, CA 95014-0701

UNITED STATES PATENT AND TRADEMARK OFFICE

COMMISSIONER FOR PATENTS
UNITED STATES PATENT AND TRADEMARK OFFICE
P.O. BOX 1450
ALEXANDRIA, VA 22313-1450
www.uspto.gov

MAIL

MAY 2 7 2005

DIRECTOR OFFICE
TECHNOLOGY CENTER 2100

Dillon & Yudell LLP
8911 North Capital of Texas Hwy
Suite 2110
Austin, TX 78759

In re Application of: Garfinkle, et al. Application No. 09/564,823 Attorney Docket No. AUS990887US1 Filed: May 4, 2000 For: METHOD, SYSTEM, AND PROGRAM FOR SAVING A STATE OF A TASK AND EXECUTING THE TASK BY A PROCESSOR IN A MULTIPROCESSOR SYSTEM	DECISION ON PETITION TO WITHDRAW HOLDING OF ABANDONMENT UNDER 37 CFR §1.181

This is a decision on the petition to withdraw the holding of abandonment, under 37 CFR §1.181, filed on December 13, 2004.

The instant application became abandoned for failure to timely respond to the Office action mailed June 19, 2003. A notice of abandonment was mailed on December 1, 2004. A grantable petition must include a copy of the response and proof of timely filing of the response. A stamped post card receipt with an indication of the documents filed therewith is acceptable. No fee is required.

Petitioner has provided evidence in the petition that includes: a copy of the response/amendment bearing a certificate of mailing under 37 CFR §1.8(a) of September 19, 2003; a copy of the original declaration and power of attorney; and a copy of a post card receipt identifying the contents of the response, which includes a USPTO receipt date of September 22, 2003.

Since all of the criteria set forth above have been met, the petition is **GRANTED**. The Notice of Abandonment is hereby **WITHDRAWN**.

The application is being forwarded to the Supervisory Legal Instruments Examiner with instructions to **WITHDRAW** the abandonment and to enter the response (copy filed December 13, 2004). The application will then be forwarded to the examiner for prompt action on the merits. Note the change of address filed December 13, 2004 has been entered.

Brian L. Johnson
Special Programs Examiner 5/26/05
Technology Center ~~2100~~
Computer Architecture, Software, and Information Security
571-272-3595

UNITED STATES PATENT AND TRADEMARK OFFICE

#8

COMMISSIONER FOR PATENTS
UNITED STATES PATENT AND TRADEMARK OFFICE
WASHINGTON, D.C. 20231
www.uspto.gov

RECEIVED
AUG 0 6 2002
OFFICE OF PETITIONS

Paper No. 8

Dean H Nakamura
Roylance Abrams Berdo & Goodman LLP
1225 Connecticut Ave NW
Suite 315
Washington, DC 20036-2680

COPY MAILED
JUL 2 2 2002
OFFICE OF PETITIONS

In re Application of
John M. Irving, et al.
Application No. 09/564,857
Filed: May 4, 2000
Attorney Docket No. 39630

ON PETITION

RECEIVED
AUG 0 7 2002
TECH CENTER 1600/2900

This is a decision on the petition under 37 CFR 1.137(b), filed February 26, 2002, to revive the above-identified application.

The petition is **GRANTED**.

The above-identified application became abandoned for failure to reply in a timely manner to the Notice to File Missing Parts of Application (Notice) mailed August 2, 2000. The Notice set a period for reply of two (2) months from the mail date of the Notice. No extensions of time under the provisions of 37 CFR 1.136(a) were obtained. Accordingly, the above-identified application became abandoned on October 3, 2000.

The file does not indicate a change of address has been submitted, although the address given on the petition differs from the address of record. If appropriate, a change of address should be filed in accordance with MPEP 601.03. A courtesy copy of this decision is being mailed to the address given on the petition; however, the Office will mail future correspondence solely to the address of record.

Telephone inquiries concerning this decision should be directed to Retta Williams at (703) 306-5594 or in my absence, Sherry Brinkley at (703) 305-9220.

#8

The application file is being forwarded to the Office of Initial Patent Examination for further processing.

Retta Williams

Retta Williams
Petitions Examiner
Office of Petitions
Office of the Deputy Commissioner
for Patent Examination Policy

Sherry Brinkley

Sherry Brinkley
Petitions Examiner
Office of Petitions
Office of the Deputy Commissioner
for Patent Examination Policy

cc: Dean H. Nakamura
Roylance, Abrams, Berdo & Goodman, L.L.P
1300 19th Street, NW, Suite 600
Washington, DC 20036

UNITED STATES
PATENT AND
TRADEMARK OFFICE

UNDER SECRETARY OF COMMERCE FOR INTELLECTUAL PROPERTY
AND DIRECTOR OF THE UNITED STATES PATENT AND TRADEMARK OFFICE
WASHINGTON, D.C. 20231
WWW.USPTO.GOV

#12

NOVOZYMES NORTH AMERICA, INC.
500 FIFTH AVENUE
SUITE 1600
NEW YORK NY 10110

In re Application of	:
Charlotte Johansen et al	:
Serial No.: 09/564,935	: PETITION DECISION
Filed: May 4, 2000	:
Attorney Docket No.: 5865.200	:

This is in response to applicant's petition under 37 CFR 1.181, filed January 3, 2003, to withdraw the abandonment of the above identified application based on timely filing of a reply.

A review of the file history shows that the examiner mailed an Office action to applicants on May 7, 2002, setting a one month shortened statutory period for reply. Upon failure to receive a reply a Notice of Abandonment was mailed to applicants on December 17, 2002. Applicants state that they replied by facsimile transmission on June 7, 2002, and provide a copy of the transmission receipt as evidence thereof. The reply has not been located and the copy of the reply provided with the petition will be used in lieu thereof. The Notice of Abandonment was mailed in error and is hereby withdrawn and the application restored to pending status with the mailing of this decision.

Applicants' petition is **GRANTED**.

The application will be forwarded to the examiner for further consideration.

Should there be any questions with respect to this decision, please contact William R. Dixon, Jr., by mail addressed to: Director, Technology Center 1600, Washington, D.C. 20231, or by telephone at (703)308-3824 or by facsimile transmission at (703) 308-7230.

Bruce M. Kisliuk
Director, Technology Center 1600

SPE RESPONSE FOR CERTIFICATE OF CORRECTION

3/9/04 1ST REQ.

Paper No.:20070829

DATE : August 29, 2007

TO SPE OF : ART UNIT 2617

SUBJECT : Request for Certificate of Correction on Patent No.: 6,741,868

A response is requested with respect to the accompanying request for a certificate of correction.

Please complete this form and return with file, within **7** days to:
Certificates of Correction Branch - PK 3-910
Palm location **7590** - Tel. No. 305-8201

With respect to the change(s) requested, correcting Office and/or Applicant's errors, should the patent read as shown in the certificate of correction? No new matter should be introduced, nor should the scope or meaning of the claims be changed.

*OK TO ENTER CHANGES TO DWGS AS REQ. IN C OF C?

ERNEST C. WHITE, LIE

Thank You For Your Assistance **Certificates of Correction Branch**

The request for issuing the above-identified correction(s) is hereby:
Note your decision on the appropriate box.

☒ **Approved** **All** changes apply.

☐ **Approved in Part** Specify below which changes **do not** apply.

☐ **Denied** State the reasons for denial below.

Comments:

CHARLES N. APPIAH
SUPERVISORY PATENT EXAMINER

SPE: Charles Appiah **Art Unit** 2617

UNITED STATES PATENT AND TRADEMARK OFFICE

Commissioner for Patents
United States Patent and Trademark Office
P.O. Box 1450
Alexandria, VA 22313-1450
www.uspto.gov

REISING, ETHINGTON, BARNES, KISSELLE, P.C.
P.O. BOX 4390
TROY MI 48099-4390

COPY MAILED
AUG 21 2008

In re Patent No. 6,488,491	:	
Issue Date: December 3, 2002	:	
Application No. 09/564,998	:	DECISION ON PETITION
Filed: May 4, 2000	:	
For: APPARATUS FOR MOLDING BLOCKS	:	
HAVING AIR KNIFE CLEANSING	:	
SYSTEM	:	

This is a decision on the petition under 37 CFR 1.181 (no fee), filed July 11, 2008, requesting refund of the maintenance fee for the above-identified patent application.

The request for refund is **DISMISSED.**

The first maintenance fee was paid on May 11, 2006 for the above patent application.

Applicant has now filed the instant request for a refund of the maintenance fee.

37 CFR 1.26 states:

> (a) The Commissioner may refund any fee **paid by mistake** or in excess of that required. **A change of purpose after the payment of a fee, such as when a party desires to withdraw a patent or trademark filing for which the fee was paid, including an application, an appeal, or a request for an oral hearing, will not entitle a party to a refund of such fee.** The Office will not refund amounts of twenty-five dollars or less unless a refund is specifically requested, and will not notify the payor of such amounts. If a party paying a fee or requesting a refund does not provide the banking information necessary for making refunds by electronic funds transfer (31 U.S.C. 3332 and 31 CFR part 208), or instruct the Office that refunds are to be credited to a deposit account, the Commissioner may require such information, or use the banking information on the payment instrument to make a refund. Any refund of a fee paid by credit card will be by a credit to the credit card account to which the fee was charged.

Furthermore, MPEP 607.02 states:

> **When an applicant or patentee takes an action "by mistake" (e.g., files an application or maintains a patent in force "by mistake"), the submission of fees**

> **required to take that action (e.g., a filing fee submitted with such application or a maintenance fee submitted for such patent) is not a "fee paid by mistake" within the meaning of 35 U.S.C. 41(d),**
>
> 37 CFR 1.26(a) also provides that a change of purpose after the payment of a fee, as when a party desires to withdraw the filing of a patent application for which the fee was paid, will not entitle the party to a refund of such fee.[1]

Applicant stated in the copy of the letter sent to Mr. Duane Rondeau (assignee Besser) on February 15, 2006 the below:

> "Please indicate below whether or not you wish to keep this patent in force and return one copy of this letter to me by May 15, 2006 in the enclosed, self-addressed envelope. Please sign and return the copy of this letter even if you do not wish to have the fee paid."

A reply to the letter indicated, "**DO NOT PAY** the fee – allow the patent to expire" dated and signed May 26, 2006.

It appears; applicant paid the fee prior to receiving the reply from the assignee on May 26, 2006.

Therefore, as can be seen from all of the above, refunding the maintenance fee is not appropriate.

Telephone inquiries concerning this decision should be directed to the undersigned at (571) 272-3208.

Karen Creasy

Karen Creasy
Petitions Examiner
Office of Petitions

---

[1] MPEP 607.02 (emphasis added).

UNITED STATES PATENT AND TRADEMARK OFFICE

UNITED STATES DEPARTMENT OF COMMERCE
United States Patent and Trademark Office
Address: COMMISSIONER FOR PATENTS
P.O. Box 1450
Alexandria, Virginia 22313-1450
www.uspto.gov

APPLICATION NO.	FILING DATE	FIRST NAMED INVENTOR	ATTORNEY DOCKET NO.	CONFIRMATION NO.
09/565,009	05/04/2000	Jian Ni	1488.1310006/EKS/EJH	1313

7590 12/08/2004

Sterne Kessler Goldstein & Fox P L L C
Suite 600
1100 New York Avenue
Washington, DC 20005-3934

EXAMINER
KAUFMAN, CLAIRE M

ART UNIT	PAPER NUMBER
1646	

DATE MAILED: 12/08/2004

Please find below and/or attached an Office communication concerning this application or proceeding.

UNITED STATES PATENT AND TRADEMARK OFFICE

Commissioner for Patents
United States Patent and Trademark Office
P.O. Box 1450
Alexandria, VA 22313-1450
www.uspto.gov

In re Application of :
Jian Ni, et al :
Serial No. 09/565,009 :
Filed: 05/24/2000 :
For: DEATH DOMAIN CONTAINING RECEPTOR 5

NOTICE OF WITHDRAWAL
FROM ISSUE
UNDER 37 CFR 1.313

The purpose of this communication is to inform you that the above-identified application is being withdrawn from issue pursuant to 37 CFR 1.313.

The application is being withdrawn to due to possible Interference. The examiner therefor will communicate the reasons to you.

The issue fee is refundable upon written request. If, however, the application is again found allowable, the issue fee can be applied toward payment of the issue fee in the amount identified on the new Notice of Allowance and Issue Fee Due upon written request. This request and any balance due must be received on or before the due date noted in the new Notice of Allowance in order to prevent abandonment of the application.

Telephone inquiries should be directed to Brenda Brumback (571) 272-0961.

Jasemine C. Chambers

Jasemine C. Chambers, Director
Technology Center 1600

STERNE KESSLER GOLDSTEIN & FOX, PLLC
SUITE 600
1100 NEW YORK AVENUE
WASHINGTON, DC 20005-3934

UNITED STATES PATENT AND TRADEMARK OFFICE

Commissioner for Patents
United States Patent and Trademark Office
P.O. Box 1450
Alexandria, VA 22313-1450
www.uspto.gov

APR 13 2005

Jason A. Reyes
HALE and DORR LLP
60 State Street
Boston, MA 02109

In re Application of Lousi J. Culot et al Application No. 09/565,085 Filed: May 5, 2000 For: DERIVING PRODUCT INFORMATION	: : : :	DECISION ON PETITION TO WITHDRAW THE HOLDING OF ABANDONMENT

This is a decision on applicant's Petition to Withdraw the Holding of Abandonment under 37 CFR 1.181, filed in the United States Patent and Trademark Office on March 10, 2005.

The petition is **DISMISSED**.

A review of the file record reveals that a Non-Final rejection was issued June 28, 2004. Because no response to the Non-Final rejection of June 28, 2004 was filed, the application was abandoned and a notice to that effect was mailed February 10, 2005.

Applicant's petition states that a response to the Non-Final rejection of June 28, 2004 was filed on October 28, 2004 and provides a date stamped post card receipt as evidence. While the post card receipt is evidence of a submittal applicant did not provide a copy of the response filed on October 28, 2004. A copy of the complete submittal of October 28, 2004 must be submitted.

Any request for reconsideration of this decision must be submitted within **TWO (2) MONTHS** from the mail date of this decision. Extensions of time under 37 CFR 1.136(b) are permitted. The reconsideration request should include a cover letter entitled "Renewed Petition to Withdraw the Holding of Abandonment Under 37 CFR 1.181."

Steven N. Meyers
Special Programs Examiner
Technology Center 3600
(703) 308-3868

SNM/jwk: 4/10/05

UNITED STATES PATENT AND TRADEMARK OFFICE

COMMISSIONER FOR PATENTS
UNITED STATES PATENT AND TRADEMARK OFFICE
P.O. BOX 1450
ALEXANDRIA, VA 22313-1450
www.uspto.gov

SEP 15 2005

Jason A. Reyes
HALE and DORR LLP
60 State Street
Boston, MA 02109

In re Application of	:	
Lousi J. Culot et al	:	DECISION ON PETITION
Application No. 09/565,085	:	TO WITHDRAW THE
Filed: May 5, 2000	:	HOLDING OF ABANDONMENT
For: DERIVING PRODUCT INFORMATION		

This is a decision on applicant's Renewed Petition to Withdraw the Holding of Abandonment under 37 CFR 1.181, filed in the United States Patent and Trademark Office on May 24, 2005. This renewed petition being filed in response to the decision mailed April 13, 2005, to the petition filed March 10, 2005.

The petition is **DENIED**.

A review of the file record reveals that a Non-Final rejection was issued June 28, 2004. Because no response to the Non-Final rejection of June 28, 2004 was received, the application was abandoned and a notice to that effect was mailed February 10, 2005.

Applicant's petition filed March 10, 2005 stated that a response to the Non-Final rejection of June 28, 2004 was filed on October 28, 2004 and provided a date stamped post card receipt as evidence. The decision mailed April 13, 2005 stated that while the post card receipt is evidence of a submittal applicant did not provide a copy of the response filed on October 28, 2004 and that a copy of the complete submittal of October 28, 2004 must be submitted.

The instant petition recites that the file appears to have been misplaced and that applicant is unable to obtain a copy of the original filing of the response submitted October 28, 2004. Applicant provides a copy of a response, which "to the best of Applicants' knowledge" provides, information the same as the original response filed on October 28, 2004.

As applicants are unable to provide a true copy of the submission originally filed October 28, 2004, this petition is **DENIED**.

Applicant may wish to consider filing a petition to revive under 37 CFR 1.137(a) (unavoidable delay) or 37 CFR 1.137(b) (unintentional delay) as discussed below.

I. Unavoidable Delay

A grantable petition to revive an abandoned application under 37 CFR 1.137(a) must be accompanied by: (1) the required reply (unless previously filed), which may be met by the filing of a continuing application in a nonprovisional application abandoned for failure to prosecute; (2) the petition fee required by 37 CFR 1.17(l); and (3) an adequate showing to the satisfaction of the Commissioner that the entire delay in filing the required reply from the due date for the reply until the filing of a grantable petition pursuant to 37 CFR 1.137(a) was unavoidable.

The showing requirement can be met by submission of statements of fact establishing that the delay in filing the reply was unavoidable. This includes a satisfactory showing that the cause of the delay resulting in failure to reply in a timely fashion to the Office action was unavoidable. Diligence during the time period between abandonment and filing of the petition to revive must also be shown.

As an alternative to filing a petition for unavoidable abandonment, a petition for revival of an application abandoned unintentionally under 37 CFR 1.137(b) might be appropriate.

II. Unintentional Delay

A grantable petition to revive an abandoned application under 37 CFR 1.137(b) must be accompanied by: (1) the required reply (unless previously filed), which may be met by the filing of a continuing application in a nonprovisional application abandoned for failure to prosecute; (2) the petition fee required by 37 CFR 1.17(m); and (3) a statement that the entire delay in filing the required reply from the due date for the reply until the filing of a grantable petition pursuant to 37 CFR 1.137(b) was unintentional.

If not previously filed, the reply to the outstanding Office action must accompany the petition to revive. The required items should be promptly submitted under a cover letter entitled "Petition to Revive."

Further correspondence with respect to a petition to revive should be addressed as follows:

By Mail: Deputy Commissioner of Patent Examination Policy
Box 1450
Alexandria, VA 22313-1450

By Fax: (571) 273-8300
Attn: Office of Petitions

By Hand: Customer Service Window
Randolph Building
401 Dulany Street
Alexandria, VA 22314

Telephone inquiries should be directed to the Office of Petitions Staff at (571) 272-3282.

Any request for reconsideration of this decision must be submitted within TWO (2) MONTHS from the mail date of this decision. Extensions of time under 37 CFR 1.136(b) are permitted. The reconsideration request should include a cover letter entitled "Renewed Petition to Withdraw the Holding of Abandonment Under 37 CFR 1.81."

Kenneth J. Dorner
Special Programs Examiner
Patent Technology Center 3600
(571) 272-6587

KJD/rjc 08/23/05

UNITED STATES PATENT AND TRADEMARK OFFICE

COMMISSIONER FOR PATENTS
UNITED STATES PATENT AND TRADEMARK OFFICE
P.O. BOX 1450
ALEXANDRIA, VA 22313-1450
www.uspto.gov

Jason A Reyes
Hale and Dorr, LLP
60 State Street
Boston, MA 02109

COPY MAILED

JAN 19 2006

OFFICE OF PETITIONS

In re Application of	:	
Louis J. Culot, et. al.	:	
Application No. 09/565,085	:	ON PETITION
Filed: May 5, 2000	:	
Attorney Docket No. 103544.127	:	

This is a decision on the petition under 37 CFR 1.137(b), filed November 17, 2005, to revive the above-identified application.

The petition is **GRANTED**.

The application became abandoned for failure to reply to the non-final Office action mailed July 28, 2004.

The petition satisfies the requirements of 37 CFR 1.137(b) in that petitioner has supplied (1) the reply in the form of an amendment; (2) the petition fee of $750; and (3) an adequate statement of unintentional delay.

The application file is being referred to Technology Center Art Unit 3627, for review of the amendment filed with the instant petition.

Telephone inquiries concerning this decision should be directed to the undersigned at (571) 272-3226.

Andrea Smith
Petitions Examiner
Office of Petitions

UNITED STATES PATENT AND TRADEMARK OFFICE

COMMISSIONER FOR PATENTS
UNITED STATES PATENT AND TRADEMARK OFFICE
P.O. BOX 1450
ALEXANDRIA, VA 22313-1450
WWW.USPTO.GOV

Paper No. 24

BRINKS HOFER GILSON & LIONE
NBC TOWER-SUITE 3600
455 NORTH CITYFRONT PLAZA DRIVE
CHICAGO, IL 60611-5599

COPY MAILED

JUL 0 2 2003

OFFICE OF PETITIONS

In re Application of :
Frederick J. Lang et al :
Application No. 09/565,125 : ON PETITION
Filed: May 4, 2000 :
Attorney Docket No. 11302-0910 (44040-228369) :

This is a decision on the petition under 37 CFR 1.137(b), filed June 24, 2003, to revive the above-identified application.

The petition is **GRANTED**.

The above-identified application became abandoned for failure to reply in a timely manner to the non-final Office action mailed September 24, 2002, which set a shortened statutory period for reply of one (1) month. No extensions of time under the provisions of 37 CFR 1.136(a) were obtained. Accordingly, the above-identified application became abandoned on October 25, 2002.

The change of correspondence address filed June 24, 2003 is noted and made of record.

Telephone inquiries concerning this decision should be directed to Wan Laymon at (703) 305-9282.

The application file is being forwarded to Technology Center AU 1711.

Wan Laymon

Wan Laymon
Petitions Examiner
Office of Petitions
Office of the Deputy Commissioner
for Patent Examination Policy

UNITED STATES PATENT AND TRADEMARK OFFICE

Commissioner for Patents
United States Patent and Trademark Office
P.O. Box 1450
Alexandria, VA 22313-1450
www.uspto.gov

Scheef & Stone, LLP
5956 Sherry Lane, Suite 1400
Dallas, TX 75225

COPY MAILED
JUL 21 2006
OFFICE OF PETITIONS

In re Application of	:	
Douglas DEEDS	:	
Application No. 09/565,146	:	DECISION ON PETITION
Filed: May 5, 2000	:	TO WITHDRAW
Attorney Docket No. 9015.020 (NC13998)	:	FROM RECORD
	:	

This is a decision on the Request to Withdraw as attorney or agent of record under 37 C.F.R. § 1.36(b), filed April 7, 2006.

The request is **NOT APPROVED** as moot.

A review of the file record indicates that the power of attorney to Robert H, Kelly and attorneys associated with customer number 30973 have been revoked by the assignee of the patent application on April 5, 2006. Accordingly, the request to withdraw under 37 C.F.R. § 1.36(b) is moot.

All future communications from the Office will continue to be directed to the below-listed address until otherwise notified by applicant.

Telephone inquires concerning this decision should be directed to Monica Graves at 571-272-7253.

David Bucci
Petitions Examiner
Office of Petitions

cc: Alston & Bird LLP
Bank of America Plaza
101 South Tryon Street, Suite 4000
Charlotte, NC 28280-4000

UNITED STATES PATENT AND TRADEMARK OFFICE

Commissioner for Patents
United States Patent and Trademark Office
P.O. Box 1450
Alexandria, VA 22313-1450
www.uspto.gov

In re Patent No. 6302138
Issue Date: October 16,2001
Application No. 09565167
Filed: May 3,2000
Attorney Docket No. SUMN:002US1

:

:DECISION GRANTING PETITION
:UNDER 37 CFR 1.378(c)

:

This is a decision on the electronic petition, filed September 8,2007 ,under 37 CFR 1.378(c) to accept the unintentionally delayed payment of the 3.5 year maintenance fee for the above-identified patent.

The petition is GRANTED.

The maintenance fee is accepted, and the above-identified patent reinstated as of September 8,2007 . This decision also constitutes notice that the fee has been accepted. An electronic copy of the petition and this decision has been created as an entry in an Image File Wrapper. Nevertheless, petitioner should print and retain an independent copy

Telephone inquires related to this electronic decision should be directed to the Electronic Business Center at 1-866-217-9197.

Under the Paperwork Reduction Act of 1995, no persons are required to respond to a collection of information unless it displays valid OMB control number.

PETITION TO ACCEPT UNINTENTIONALLY DELAYED PAYMENT OF MAINTENANCE FEE IN AN EXPIRED PATENT (37 CFR 1.378(c))

Patent Number	Issue Date (YYYY-MM-DD)	Application Number	Filing Date (YYYY-MM-DD)	Docket Number (if applicable)
6302138	2001-10-16	09565167	2000-05-03	

CAUTION: Maintenance fee (and surcharge, if any) payment must correctly identify: (1) the patent number and (2) the application number of the actual U.S. application leading to issuance of that patent to ensure the fee(s) is/are associated with the correct patent. 37 CFR 1.366(c) and (d).

SMALL ENTITY
☒ Patentee claims, or has previously claimed, small entity status. See 37 CFR 1.27.

LOSS OF ENTITLEMENT TO SMALL ENTITY STATUS
☐ Patentee is no longer entitled to small entity status. See 37 CFR 1.27(g)

NOT Small Entity		Small Entity	
Fee	Code	Fee	Code
○ 3 ½ year	(1551)	◉ 3 ½ year	(2551)
○ 7 ½ year	(1552)	○ 7 ½ year	(2552)
○ 11 ½ year	(1553)	○ 11 ½ year	(2553)

SURCHARGE
The surcharge required by 37 CFR 1.20(i)(2) (Fee Code 1558) must be paid as a condition of accepting unintentionally delayed payment of the maintenance fee.

MAINTENANCE FEE (37 CFR 1.20(e)-(g))
The appropriate maintenance fee must be submitted with this petition.

STATEMENT
THE UNDERSIGNED CERTIFIES THAT THE DELAY IN PAYMENT OF THE MAINTENANCE FEE TO THIS PATENT WAS UNINTENTIONAL

PETITIONER(S) REQUEST THAT THE DELAYED PAYMENT OF THE MAINTENANCE FEE BE ACCEPTED AND THE PATENT REINSTATED

THIS PORTION MUST BE COMPLETED BY THE SIGNATORY OR SIGNATORIES

37 CFR 1.378(d) states: "Any petition under this section must be signed by an attorney or agent registered to practice before the Patent and Trademark Office, or by the patentee, the assignee, or other party in interest."

I certify, in accordance with 37 CFR 1.4(d)(4) that I am

○ An attorney or agent registered to practice before the Patent and Trademark Office

○ A sole patentee

◉ A joint patentee; I certify that I am authorized to sign this submission on behalf of all the other patentees.

○ A joint patentee; all of whom are signing this e-petition

○ The assignee of record of the entire interest

A Joint Patentee and I certify that I am authorized to sign this submission on behalf of all the other patentees			
A signature of the applicant or representative is required in accordance with 37 CFR 1.33 and 10.18. Please see 37 CFR 1.4(d) for the form of the signature.			
Signature	/Nasir Pirani/	Date (YYYY-MM-DD)	2007-09-08
Name	Nasir Pirani		

This collection of information is required by 37 CFR 1.378(c). The information is required to obtain or retain a benefit by the public which is to file (and by the USPTO to process) an application. Confidentiality is governed by 35 U.S.C. 122 and 37 CFR 1.11 and 1.14. This collection is estimated to take 1 hour to complete, including gathering, preparing, and submitting the completed application form to the USPTO. Time will vary depending upon the individual case. Any comments on the amount of time you require to complete this form and/ or suggestions for reducing this burden, should be sent to the Chief Information Officer, U.S. Patent and Trademark Office, U.S. Department of Commerce, P.O. Box 1450, Alexandria, VA 22313-1450. DO NOT SEND FEES OR COMPLETED FORMS TO THIS ADDRESS. **This form can only be used when in conjunction with EFS-Web. If this form is mailed to the USPTO, it may cause delays in reinstating the patent.**

Privacy Act Statement

The Privacy Act of 1974 (P.L. 93-579) requires that you be given certain information in connection with your submission of the attached form related to a patent application or patent. Accordingly, pursuant to the requirements of the Act, please be advised that: (1) the general authority for the collection of this information is 35 U.S.C. 2(b)(2); (2) furnishing of the information solicited is voluntary; and (3) the principal purpose for which the information is used by the U.S. Patent and Trademark Office is to process and/or examine your submission related to a patent application or patent. If you do not furnish the requested information, the U.S. Patent and Trademark Office may not be able to process and/or examine your submission, which may result in termination of proceedings or abandonment of the application or expiration of the patent.

The information provided by you in this form will be subject to the following routine uses:

1. The information on this form will be treated confidentially to the extent allowed under the Freedom of Information Act (5 U.S.C. 552) and the Privacy Act (5 U.S.C. 552a). Records from this system of records may be disclosed to the Department of Justice to determine whether the Freedom of Information Act requires disclosure of these record s.

2. A record from this system of records may be disclosed, as a routine use, in the course of presenting evidence to a court, magistrate, or administrative tribunal, including disclosures to opposing counsel in the course of settlement negotiations.

3. A record in this system of records may be disclosed, as a routine use, to a Member of Congress submitting a request involving an individual, to whom the record pertains, when the individual has requested assistance from the Member with respect to the subject matter of the record.

4. A record in this system of records may be disclosed, as a routine use, to a contractor of the Agency having need for the information in order to perform a contract. Recipients of information shall be required to comply with the requirements of the Privacy Act of 1974, as amended, pursuant to 5 U.S.C. 552a(m).

5. A record related to an International Application filed under the Patent Cooperation Treaty in this system of records may be disclosed, as a routine use, to the International Bureau of the World Intellectual Property Organization, pursuant to the Patent Cooperation Treaty.

6. A record in this system of records may be disclosed, as a routine use, to another federal agency for purposes of National Security review (35 U.S.C. 181) and for review pursuant to the Atomic Energy Act (42 U.S.C. 218(c)).

7. A record from this system of records may be disclosed, as a routine use, to the Administrator, General Services, or his/her designee, during an inspection of records conducted by GSA as part of that agency's responsibility to recommend improvements in records management practices and programs, under authority of 44 U.S.C. 2904 and 2906. Such disclosure shall be made in accordance with the GSA regulations governing inspection of records for this purpose, and any other relevant (i.e., GSA or Commerce) directive. Such disclosure shall not be used to make determinations about individuals.

8. A record from this system of records may be disclosed, as a routine use, to the public after either publication of the application pursuant to 35 U.S.C. 122(b) or issuance of a patent pursuant to 35 U.S.C. 151. Further, a record may be disclosed, subject to the limitations of 37 CFR 1.14, as a routine use, to the public if the record was filed in an application which became abandoned or in which the proceedings were terminated and which application is referenced by either a published application, an application open to public inspections or an issued patent.

9. A record from this system of records may be disclosed, as a routine use, to a Federal, State, or local law enforcement agency, if the USPTO becomes aware of a violation or potential violation of law or regulation.

UNITED STATES PATENT AND TRADEMARK OFFICE

Commissioner for Patents
United States Patent and Trademark Office
P.O. Box 1450
Alexandria, VA 22313-1450
www.uspto.gov

Paper No. 12

SUGHRUE MION, PLLC
401 Castro Street, Ste 220
Mountain View,CA 94041-2007

COPY MAILED

NOV 0 8 2004

OFFICE OF PETITIONS

In re Application of :
Lester Ludwig, et al. :
Application No. 09/565,192 :
Filed: May 4, 2000 :
Attorney Docket No. COLB-003/01US :

ON PETITION

This is a decision on the petition under 37 CFR 1.313, filed November 4, 2004 to withdraw the above-identified application from issue after payment of the issue fee.

The petition is **DISMISSED**.

Petitioners request that the application be withdrawn from issue in order to consider a previously filed Amendment to Correct Inventorship. However, 37 CFR 1.313(c) provides that:

Once the issue fee has been paid, the application will not be withdrawn from issue upon petition by the applicant for any reason except:

(1) Unpatentability of one of more claims, which petition must be accompanied by an unequivocal statement that one or more claims are unpatentable, an amendment to such claim or claims, and an explanation as to how the amendment causes such claim or claims to be patentable;

(2) Consideration of a submission pursuant to 37 CFR 1.114; or

(3) Express abandonment of the application. Such express abandonment may be in favor of a continuing application.

See Changes to Application Examination and Provisional Application Practice, Interim Rule, 65 Fed. Reg. 14865, 14873 (Mar. 20, 2000), 1233 Off. Gaz. Pat. Office 47, 54 (Apr. 11, 2000).

The circumstances of the above-identified application do not fall within any of the exceptions enumerated above.

Telephone inquires related to this decision should be directed to the undersigned at (571) 272-3204.

The application is being returned to the Office of Patent Publications.

Sherry D. Brinkley

Sherry D. Brinkley
Petitions Examiner
Office of Petitions
Office of the Deputy Commissioner
for Patent Examination Policy

UNITED STATES PATENT AND TRADEMARK OFFICE

UNITED STATES DEPARTMENT OF COMMERCE
United States Patent and Trademark Office
Address: COMMISSIONER FOR PATENTS
P.O. Box 1450
Alexandria, Virginia 22313-1450
www.uspto.gov

APPLICATION NO.	FILING DATE	FIRST NAMED INVENTOR	ATTORNEY DOCKET NO.	CONFIRMATION NO.
09/565,192	05/04/2000	Lester Ludwig	COLB-003/01US	1679

23493 7590 03/31/2005
SUGHRUE MION, PLLC
401 Castro Street, Ste 220
Mountain View, CA 94041-2007

EXAMINER
DINH, DUNG C

ART UNIT	PAPER NUMBER
2153	15

DATE MAILED: 03/31/2005

Please find below and/or attached an Office communication concerning this application or proceeding.

UNITED STATES PATENT AND TRADEMARK OFFICE

COMMISSIONER FOR PATENTS
UNITED STATES PATENT AND TRADEMARK OFFICE
P.O. BOX 1450
ALEXANDRIA, VA 22313-1450
www.uspto.gov

In re Patent No. 6816904
Issue Date: 11/09/2004
Appl. No.: 09/565,192
Filed: May 04, 2000
For: Correction of Inventorship

DECISION DISMISSING PETITION
37 CFR 1.324

This is a decision on the request under 37 CFR 1.48, filed 8/30/2004 (and resubmitted on 10/28/2004). In view of the fact that the patent has already issued, the request under 37 CFR 1.48 has been treated as a petition to correct inventorship under 37 CFR 1.324.

The petition is dismissed.

A petition to correct inventorship as provided by 37 CFR 1.324 requires (1) a statement from each person who is being added as an inventor that the inventorship error occurred without any deceptive intention on their part, (2) a statement from the current named inventors (including any "inventor" being deleted) who have not submitted a statement as per "(1)" either agreeing to the change of inventorship or stating that they have no disagreement in regard to the requested change, (3) a statement from all assignees of the parties submitting a statement under "(1)" and "(2)" agreeing to the change of inventorship in the patent; such statement must comply with the requirements of 37 CFR 3.73(b); and (4) the fee set forth in 37 CFR 1.20(b).

This petition lacks items "(2)" - a statement from the current named inventors, and "(3)" - a statement from all assignees.

Glenton Burgess
Supervisory Patent Examiner
Art Unit 2152
Patent Examining Group 2100

SUGHRUE MION, PLLC
401 Castro Street, Ste 220
Mountain View, CA 94041-2007

UNITED STATES PATENT AND TRADEMARK OFFICE

COMMISSIONER FOR PATENTS
UNITED STATES PATENT AND TRADEMARK OFFICE
P.O. BOX 1450
ALEXANDRIA, VA 22313-1450
www.uspto.go

Paper No. 13

MAIL

JUL 15 2004

DIRECTOR OFFICE
TECHNOLOGY CENTER 2600

COOLEY GODWARD LLP
ATTN: PATENT GROUP
FIVE PALO ALTO SQUARE
3000 EL CAMINO REAL
PALO ALTO, CA 94306-2155

In re Application of
NEVO et al
Application No. 09/565,215
Filed: May 4, 2000

For: MULTI-WIRELESS NETWORK CONFIGURABLE BEHAVIOR

DECISION ON REQUEST TO WITHDRAW FROM RECORD

This is a decision on the request for withdrawal as agent of record filed on June 1, 2004.

A grantable request to withdraw as attorney/agent of record must:
(1) indicate the present mailing address of the attorney(s)/agent(s) who seek(s) to withdraw, and
(2) be signed by each attorney/agent seeking to withdraw or clearly be signed on their behalf, and
(3) be *approved* at least thirty (30) days prior to the maximum extendable period for response to any outstanding Office Action, and
(4) indicate the address to which future correspondence should be mailed.

Petitioner has met all of the above. Accordingly, the request is **GRANTED**.

Attorneys/agents listed in the Request to withdraw are withdrawn.

All future communications from the Office will be directed to the address listed below until otherwise notified by applicant. Applicant is reminded of the obligation to promptly notify the Patent and Trademark Office of any change in correspondence address to ensure receipt of all communications from the Office.

The file is being returned to TC 2600 Technical Support Staff to update the correspondence address and then will be forwarded to the examiner for further action in due course.

Kenneth A. Wieder

Kenneth A Wieder
Special Program Examiner
Technology Center 2600
Communications
(703) 305-4710

Cc: INTEL CORPORATION
MAILSTOP SC4/202
2200 MISSION COLLEGE BOULEVARD
SANTA CLARA, CA 95052

UNITED STATES PATENT AND TRADEMARK OFFICE

COMMISSIONER FOR PATENTS
UNITED STATES PATENT AND TRADEMARK OFFICE
P.O. BOX 1450
ALEXANDRIA, VA 22313-1450
www.uspto.gov

Paper No. 31

PAUL J. WHITE
NATIONAL RENEWABLE ENERGY LABORATORY
1617 COLE BLVD
GOLDEN, CO 80401

COPY MAILED

NOV 0 6 2003

OFFICE OF PETITIONS

In re Application of :
Min Zhang et al :
Application No. 09/565,233 :
Filed: May 1, 2000 :
Attorney Docket No. NREL00-14

NOTICE

This is a notice regarding your request for acceptance of a fee deficiency submission under 37 CFR 1.28. On September 1, 1998, the Court of Appeals for the Federal Circuit held that 37 CFR 1.28(c) is the sole provision governing the time for correction of the erroneous payment of the issue fee as a small entity. **See DH Technology v. Synergystex International, Inc. 154 F.3d 1333, 47 USPQ2d 1865 (Fed. Cir. Sept. 1, 1998).**

The Office no longer investigates or rejects original or reissue applications under 37 CFR 1.56. **1098 Off. Gaz. Pat. Office 502 (January 3, 1989)**. Therefore, nothing in this Notice is intended to imply that an investigation was done.

Your fee deficiency submission under 37 CFR 1.28 is hereby **ACCEPTED**.

Inquiries related to this communication should be directed to the Office of Petitions Staff at (703) 305-9285.

This file is being forwarded to Technology Center 1600.

Irvin Dingle
Petitions Examiner
Office of Petitions
Office of the Deputy Commissioner
for Patent Examination Policy

UNITED STATES PATENT AND TRADEMARK OFFICE

UNITED STATES DEPARTMENT OF COMMERCE
United States Patent and Trademark Office
Address: COMMISSIONER FOR PATENTS
P.O. Box 1450
Alexandria, Virginia 22313-1450
www.uspto.gov

BRINKS HOFER GILSON & LIONE/UTAH
UTAH OFFICE
222 South Main Street
Suite 1930
SALT LAKE CITY, UT 84101

Mail Date: 04/23/2010

Applicant	: Thomas D. Yager	: DECISION ON REQUEST FOR
Patent Number	: 7655443	: RECALCULATION of PATENT
Issue Date	: 02/02/2010	: TERM ADJUSTMENT IN VIEW
Appliction No	: 09/565,249	: OF WYETH
Filed	: 05/05/2000	:
		:

The Patentee's Request for Recalculation is **DISMISSED.**

This Request is deemed ineligible for consideration for one or more of the following reasons:

(A). The patent for which PTA recalculation is requested is either a design or reissue application or is a reexamination proceeding;

(B). The patent for which PTA recalculation is requested resulted from a utility or plant application filed under 35 USC 111(a) before May 29, 2000 and no CPA filed in the application on/after May 29, 2000;

(C). The patent for which PTA recalculation is requested resulted from an international application in which the international filing date was before May 29, 2000 and no CPA filed in the application on/after May 29, 2000;

(D). The patent for which PTA recalculation is requested issued on/after March 2, 2010;

(E). The Request for Recalculation was filed more than 180 days after the grant date of the patent and the request was not filed within two months of a dismissal of a request for reconsideration of the of the patent term under 37 CFR 1.705(d);

(F). The Request for Recalculation is not solely limited to USPTO pre-Wyeth interpretation of 35 U.S.C. 154(b)(2)(A);

or

(G). A civil action was filed pursuant to 35 U.S.C. 154(b)(4)(A)concerning the same patent at issue in this request.

Patentee may file a reply to this decision dismissing the Request for Recalculation. Patentee must file such reply within one month or thirty days, whichever is longer, of the mail date of the decision dismissing the Request for Recalculation. No fee is required if patentee is asserting in the reply that the dismissal for ineligibility is improper.

Patentee should use document code PET.OP if electronically filing a reply to this dismissal. If the USPTO finds that the request was improperly deemed ineligible, the USPTO will mail applicant a recalculation determination.

Patentee should be aware that in order to preserve the right to review in the United States District Court for the District of Columbia of the USPTO patent term adjustment determination, patentee must ensure that he or she also take the steps required under 35 U.S.C. 154(b)(4)(A). Nothing in the request for recalculation should be construed as providing an alternative time frame for commencing a civil action under 35 U.S.C. 154 (b)(4)(A).

Any questions concerning this decision should be directed to the Office of Patent Legal Administration at 571-272-7702.

UNITED STATES PATENT AND TRADEMARK OFFICE

Commissioner for Patents
United States Patent and Trademark Office
P.O. Box 1450
Alexandria, VA 22313-1450
www.uspto.gov

In re Patent No. 6243448
Issue Date: June 5,2001
Application No. 09565331
Filed: May 5,2000
Attorney Docket No. DAA-01B

:
:DECISION GRANTING PETITION
:UNDER 37 CFR 1.378(c)
:

This is a decision on the electronic petition, filed July 15,2010 ,under 37 CFR 1.378(c) to accept the unintentionally delayed payment of the 7.5 year maintenance fee for the above-identified patent.

The petition is **GRANTED**.

The maintenance fee is accepted, and the above-identified patent reinstated as of July 15,2010 .
This decision also constitutes notice that the fee has been accepted. An electronic copy of the petition and this decision has been created as an entry in the Image File Wrapper. Nevertheless, petitioner should print and retain an independent copy.

Telephone inquiries related to this electronic decision should be directed to the Electronic Business Center at 1-866-217-9197.

UNITED STATES PATENT AND TRADEMARK OFFICE

COMMISSIONER FOR PATENTS
UNITED STATES PATENT AND TRADEMARK OFFICE
WASHINGTON, D.C. 20231
www.uspto.gov

Paper No. 8

JOSEPH S TRIPOLI
THOMSON MULTIMEDIA LICENSING INC.
PATENT OPERATION
TWO INDEPENDENCE WAY P. O. BOX 5312
PRINCETON, NJ 08543-5312

COPY MAILED

APR 2 3 2003

OFFICE OF PETITIONS

In re Application of	:	
Ann-Francoise Joanblanq	:	
Application No. 09/565,346	:	ON PETITION
Filed: May 5, 2000	:	
Attorney Docket No. RCA 90,162	:	

This is a decision on the petition under 37 CFR 1.137(b), filed April 14, 2003, to revive the above-identified application.

The petition is **GRANTED**.

The above-identified application became abandoned for failure to reply in a timely manner to the non-final Office action mailed September 30, 2002, which set a shortened statutory period for reply of three (3) months. No extensions of time under the provisions of 37 CFR 1.136(a) were obtained. Accordingly, the application became abandoned on December 31, 2002.

Telephone inquiries concerning this decision should be directed to the undersigned at (703) 306-5594.

The application file is being forwarded to Technology Center 2600, Art Unit 2614 for further processing.

Retta Williams

Retta Williams
Petitions Examiner
Office of Petitions
Office of the Deputy Commissioner
for Patent Examination Policy

UNITED STATES PATENT AND TRADEMARK OFFICE

COMMISSIONER FOR PATENTS
UNITED STATES PATENT AND TRADEMARK OFFICE
P.O. BOX 1450
ALEXANDRIA, VA 22313-1450
www.uspto.gov

Paper No. 12

Law Office of Royal W. Craig
10 North Calvert Street, Suite 153
Baltimore, MD 21202

COPY MAILED
NOV 0 5 2003
OFFICE OF PETITIONS

In re Application of :
James L. Gamble III :
Application No. 09/565,354 :
Filed: May 5, 2000 :
Attorney Docket No. GAMBLE-pa-1 :

ON PETITION

This is a decision on the petition under 37 CFR 1.137(b), filed September 30, 2003, to revive the above-identified application.

The petition is GRANTED.

The above-identified application became abandoned for failure to reply within the meaning of 37 CFR 1.113 in a timely manner to the final Office action mailed February 20, 2003, which set a shortened statutory period for reply of three months from the mail date of the Notice. No extensions of time under the provisions of 37 CFR 1.136 have been obtained. Accordingly, the application became abandoned on May 21, 2003.

The application is being forwarded to Technology Center AU 3621 for further processing.

Telephone inquiries concerning this decision should be directed to Latrice Bond at (703) 308-6911.

Latrice Bond
Paralegal Specialist
Office of Petitions
Office of the Deputy Commissioner
for Patent Examination Policy

PTO/SB/66 (03-09)
Approved for use through 03/31/2012. OMB 0651-0016
U.S. Patent and Trademark Office: U.S. DEPARTMENT OF COMMERCE
Under the Paperwork Reduction Act of 1995, no persons are required to respond to a collection of information unless it displays valid OMB control number.

PETITION TO ACCEPT UNINTENTIONALLY DELAYED PAYMENT OF MAINTENANCE FEE IN AN EXPIRED PATENT (37 CFR 1.378(c))

Patent Number	Issue Date (YYYY-MM-DD)	Application Number	Filing Date (YYYY-MM-DD)	Docket Number (if applicable)
6690399	2004-02-10	09565385	2000-05-05	T6028 US

CAUTION: Maintenance fee (and surcharge, if any) payment must correctly identify: (1) the patent number and (2) the application number of the actual U.S. application leading to issuance of that patent to ensure the fee(s) is/are associated with the correct patent. 37 CFR 1.366(c) and (d).

SMALL ENTITY
☐ Patentee claims, or has previously claimed, small entity status. See 37 CFR 1.27.

LOSS OF ENTITLEMENT TO SMALL ENTITY STATUS
☐ Patentee is no longer entitled to small entity status. See 37 CFR 1.27(g)

NOT Small Entity		Small Entity	
Fee	Code	Fee	Code
◉ 3 ½ year	(1551)	○ 3 ½ year	(2551)
○ 7 ½ year	(1552)	○ 7 ½ year	(2552)
○ 11 ½ year	(1553)	○ 11 ½ year	(2553)

SURCHARGE
The surcharge required by 37 CFR 1.20(i)(2) (Fee Code 1558) must be paid as a condition of accepting unintentionally delayed payment of the maintenance fee.

MAINTENANCE FEE (37 CFR 1.20(e)-(g))
The appropriate maintenance fee must be submitted with this petition.

STATEMENT
THE UNDERSIGNED CERTIFIES THAT THE DELAY IN PAYMENT OF THE MAINTENANCE FEE TO THIS PATENT WAS UNINTENTIONAL

PETITIONER(S) REQUEST THAT THE DELAYED PAYMENT OF THE MAINTENANCE FEE BE ACCEPTED AND THE PATENT REINSTATED

THIS PORTION MUST BE COMPLETED BY THE SIGNATORY OR SIGNATORIES

37 CFR 1.378(d) states: "Any petition under this section must be signed by an attorney or agent registered to practice before the Patent and Trademark Office, or by the patentee, the assignee, or other party in interest."

I certify, in accordance with 37 CFR 1.4(d)(4) that I am

◉ An attorney or agent registered to practice before the Patent and Trademark Office

○ A sole patentee

○ A joint patentee; I certify that I am authorized to sign this submission on behalf of all the other patentees.

○ A joint patentee; all of whom are signing this e-petition

○ The assignee of record of the entire interest

Patent Practitioner			
A signature of the applicant or representative is required in accordance with 37 CFR 1.33 and 10.18. Please see 37 CFR 1.4(d) for the form of the signature			
Signature	/Steven J. Helmer/	Date (YYYY-MM-DD)	2009-11-30
Name	Steven J. Helmer	Registration Number	40475

This collection of information is required by 37 CFR 1.378(c). The information is required to obtain or retain a benefit by the public which is to file (and by the USPTO to process) an application. Confidentiality is governed by 35 U.S.C. 122 and 37 CFR 1.11 and 1.14. This collection is estimated to take 1 hour to complete, including gathering, preparing, and submitting the completed application form to the USPTO. Time will vary depending upon the individual case. Any comments on the amount of time you require to complete this form and/ or suggestions for reducing this burden, should be sent to the Chief Information Officer, U.S. Patent and Trademark Office, U.S. Department of Commerce, P.O. Box 1450, Alexandria, VA 22313-1450. DO NOT SEND FEES OR COMPLETED FORMS TO THIS ADDRESS. **This form can only be used when in conjunction with EFS-Web. If this form is mailed to the USPTO, it may cause delays in reinstating the patent.**

Privacy Act Statement

The Privacy Act of 1974 (P.L. 93-579) requires that you be given certain information in connection with your submission of the attached form related to a patent application or patent. Accordingly, pursuant to the requirements of the Act, please be advised that: (1) the general authority for the collection of this information is 35 U.S.C. 2(b)(2); (2) furnishing of the information solicited is voluntary; and (3) the principal purpose for which the information is used by the U.S. Patent and Trademark Office is to process and/or examine your submission related to a patent application or patent. If you do not furnish the requested information, the U.S. Patent and Trademark Office may not be able to process and/or examine your submission, which may result in termination of proceedings or abandonment of the application or expiration of the patent.

The information provided by you in this form will be subject to the following routine uses:

1. The information on this form will be treated confidentially to the extent allowed under the Freedom of Information Act (5 U.S.C. 552) and the Privacy Act (5 U.S.C. 552a). Records from this system of records may be disclosed to the Department of Justice to determine whether the Freedom of Information Act requires disclosure of these records.

2. A record from this system of records may be disclosed, as a routine use, in the course of presenting evidence to a court, magistrate, or administrative tribunal, including disclosures to opposing counsel in the course of settlement negotiations.

3. A record in this system of records may be disclosed, as a routine use, to a Member of Congress submitting a request involving an individual, to whom the record pertains, when the individual has requested assistance from the Member with respect to the subject matter of the record.

4. A record in this system of records may be disclosed, as a routine use, to a contractor of the Agency having need for the information in order to perform a contract. Recipients of information shall be required to comply with the requirements of the Privacy Act of 1974, as amended, pursuant to 5 U.S.C. 552a(m).

5. A record related to an International Application filed under the Patent Cooperation Treaty in this system of records may be disclosed, as a routine use, to the International Bureau of the World Intellectual Property Organization, pursuant to the Patent Cooperation Treaty.

6. A record in this system of records may be disclosed, as a routine use, to another federal agency for purposes of National Security review (35 U.S.C. 181) and for review pursuant to the Atomic Energy Act (42 U.S.C. 218(c)).

7. A record from this system of records may be disclosed, as a routine use, to the Administrator, General Services, or his/her designee, during an inspection of records conducted by GSA as part of that agency's responsibility to recommend improvements in records management practices and programs, under authority of 44 U.S.C. 2904 and 2906. Such disclosure shall be made in accordance with the GSA regulations governing inspection of records for this purpose, and any other relevant (i.e., GSA or Commerce) directive. Such disclosure shall not be used to make determinations about individuals.

8. A record from this system of records may be disclosed, as a routine use, to the public after either publication of the application pursuant to 35 U.S.C. 122(b) or issuance of a patent pursuant to 35 U.S.C. 151. Further, a record may be disclosed, subject to the limitations of 37 CFR 1.14, as a routine use, to the public if the record was filed in an application which became abandoned or in which the proceedings were terminated and which application is referenced by either a published application, an application open to public inspections or an issued patent.

9. A record from this system of records may be disclosed, as a routine use, to a Federal, State, or local law enforcement agency, if the USPTO becomes aware of a violation or potential violation of law or regulation.

UNITED STATES PATENT AND TRADEMARK OFFICE

Commissioner for Patents
United States Patent and Trademark Office
P.O. Box 1450
Alexandria, VA 22313-1450
www.uspto.gov

In re Patent No. 6690399
Issue Date: February 10,2004
Application No. 09565385
Filed: May 5,2000
Attorney Docket No. 4085-212-27

:
:DECISION GRANTING PETITION
:UNDER 37 CFR 1.378(c)
:

This is a decision on the electronic petition, filed November 30,2009 ,under 37 CFR 1.378(c) to accept the unintentionally delayed payment of the 3.5 year maintenance fee for the above-identified patent.

The petition is **GRANTED**.

The maintenance fee is accepted, and the above-identified patent reinstated as of November 30,2009 . This decision also constitutes notice that the fee has been accepted. An electronic copy of the petition and this decision has been created as an entry in the Image File Wrapper. Nevertheless, petitioner should print and retain an independent copy.

Telephone inquiries related to this electronic decision should be directed to the Electronic Business Center at 1-866-217-9197.

UNITED STATES PATENT AND TRADEMARK OFFICE

Commissioner for Patents
United States Patent and Trademark Office
P.O. Box 1450
Alexandria, VA 22313-1450
www.uspto.gov

09292005

TESTA, HURWITZ & THIBEAULT, LLP
HIGH STREET TOWER
125 HIGH STREET
BOSTON MA 02110

OCT 05 2005

In re Application of DRZAIC et al Application No. 09/565,413 Filed: May 5, 2000 Attorney Docket No. INK-077	: : : : :	DECISION ON PETITION

This is a decision on the petition filed March 11, 2004, requesting that the holding of abandonment in the above-identified application be withdrawn.

The petition to withdraw the holding of abandonment is GRANTED.

This application was held abandoned for failure to timely reply to the Notice of Non-Compliant Amendment mailed November 17, 2003, setting a one-month period of response. A Notice of Abandonment was mailed on January 12, 2004.

Petitioner asserts that a Resubmission of Amendment was filed via first class mail pursuant to 37 CFR § 1.8 on December 17, 2003 in response to the Notice of Non-Compliant Amendment. This is evidenced by a copy of the Resubmission of Amendment with the certificate of mailing and a copy of the stamped post card receipt indicating receipt of the papers in the USPTO on December 19, 2003.

The review of the application file reveals that the Resubmission of Amendment in response to the November 17, 2003 Office action was received and matched with the file. However, the Resubmission of Amendment was not noticed by either the examiner or the technical support staff and consequently the application was held to be abandoned. The application is not abandoned in fact.

For the above reasons, the Notice of Abandonment is hereby vacated and the holding of abandonment withdrawn. Inconvenience to petitioner is regretted.

The application file is being forwarded to the technical support staff for processing the Resubmission of Amendment in response to the Notice of Non-Compliant Amendment. From there, it will be returned to the examiner for further prosecution.

Questions regarding this decision should be directed to Jose' G. Dees at 571-272-1569.

James L. Dwyer, Director
Technology Center 2800
Semiconductor, Electrical and Optical
Systems and Components

UNITED STATES PATENT AND TRADEMARK OFFICE

Commissioner for Patents
United States Patent and Trademark Office
P.O. Box 1450
Alexandria, VA 22313-1450
www.uspto.gov

GEN PROBE INCORPORATED
10210 GENETIC CENTER DRIVE
SAN DIEGO, CA 92121

COPY MAILED

JUN 01 2005

OFFICE OF PETITIONS

In re Application of	:	
Michael M. Becker et al	:	
Application No. 09/565,427	:	ON PETITION
Filed: May 5, 2000	:	
Attorney Docket No. GP068-04.CN2	:	

This is a decision on the petition under 37 CFR 1.137(b), to revive the above-identified application and on the petition under 37 CFR 1.313(c)(2), to withdraw the application from issue after payment of the issue fee, filed May 25, 2005.

The petitions are **GRANTED.**

The above-identified application became abandoned for failure to submit the issue fee in a timely manner in reply to the Notice of Allowance mailed February 8, 2005, which set a statutory period for reply of three (3) months. Accordingly, the above-identified application became abandoned on May 10, 2005.

The above-identified application is withdrawn from issue for consideration of a submission under 37 CFR 1.114 (request for continued examination). See 37 CFR 1.313(c)(2).

Petitioner is advised that the issue fee paid on May 25, 2005 in the above-identified application cannot be refunded. If, however, the above-identified application is again allowed, petitioner may request that it be applied towards the issue fee required by the new Notice of Allowance.[1]

Petitioner requests a refund of the $1,400.00 issue fee submitted on May 25, 2005.

Petitioner's attention is directed to MPEP §1308.01 which states that a refund may be requested **if the examiner has withdrawn the application from issue for the purpose of reopening prosecution.** However, in the instant application, the examiner has not reopened prosecution of the application.

---

[1] The request to apply the issue fee to the new Notice may be satisfied by completing and returning the new Issue Fee Transmittal Form PTOL-85(b), which includes the following language thereon: "Commissioner for Patents is requested to apply the Issue Fee and Publication Fee (if any) or re-apply any previously paid issue fee to the application identified above." Petitioner is advised that, whether a fee is indicated as being due or not, the Issue Fee Transmittal Form **must** be completed and timely submitted to avoid abandonment. Note the language in bold text on the first page of the Notice of Allowance and Fee(s) Due (PTOL-85).

Petitioner's attention is further directed to 37 CFR 1.26 which states:

> The Commissioner may refund any fee paid by mistake or in excess of that required. A change of purpose after the payment of a fee, such as when a party desires to withdraw a patent or trademark filing for which the fee was paid, including an application, an appeal, or a request for an oral hearing, will not entitle a party to a refund of such fee.

In this case, the payment of the issue fee was owed and required by law at the time of payment thereof. Therefore, payment was not made by mistake or in excess of that required nor was there a mistake in payment as contemplated by 37 CFR 1.26.

Telephone inquiries should be directed to Wan Laymon at (571) 272-3220.

This matter is being referred to Technology Center AU 1635 for processing of the request for continued examination under 37 CFR 1.114.

Wan Laymon

Wan Laymon
Petitions Examiner
Office of Petitions
Office of the Deputy Commissioner
for Patent Examination Policy

PTO/SB/66 (03-09)
Approved for use through 03/31/2012. OMB 0651-0016
U.S. Patent and Trademark Office: U.S. DEPARTMENT OF COMMERCE
Under the Paperwork Reduction Act of 1995, no persons are required to respond to a collection of information unless it displays valid OMB control number.

PETITION TO ACCEPT UNINTENTIONALLY DELAYED PAYMENT OF MAINTENANCE FEE IN AN EXPIRED PATENT (37 CFR 1.378(c))

Patent Number	Issue Date (YYYY-MM-DD)	Application Number	Filing Date (YYYY-MM-DD)	Docket Number (if applicable)
6,803,598	2004-10-12	09/565,455	2000-05-05	79,496-US2

CAUTION: Maintenance fee (and surcharge, if any) payment must correctly identify: (1) the patent number and (2) the application number of the actual U.S. application leading to issuance of that patent to ensure the fee(s) is/are associated with the correct patent. 37 CFR 1.366(c) and (d).

SMALL ENTITY
☐ Patentee claims, or has previously claimed, small entity status. See 37 CFR 1.27.

LOSS OF ENTITLEMENT TO SMALL ENTITY STATUS
☐ Patentee is no longer entitled to small entity status. See 37 CFR 1.27(g)

NOT Small Entity		Small Entity	
Fee	Code	Fee	Code
◉ 3 ½ year	(1551)	○ 3 ½ year	(2551)
○ 7 ½ year	(1552)	○ 7 ½ year	(2552)
○ 11 ½ year	(1553)	○ 11 ½ year	(2553)

SURCHARGE
The surcharge required by 37 CFR 1.20(i)(2) (Fee Code 1558) must be paid as a condition of accepting unintentionally delayed payment of the maintenance fee.

MAINTENANCE FEE (37 CFR 1.20(e)-(g))
The appropriate maintenance fee must be submitted with this petition.

STATEMENT
THE UNDERSIGNED CERTIFIES THAT THE DELAY IN PAYMENT OF THE MAINTENANCE FEE TO THIS PATENT WAS UNINTENTIONAL

PETITIONER(S) REQUEST THAT THE DELAYED PAYMENT OF THE MAINTENANCE FEE BE ACCEPTED AND THE PATENT REINSTATED

THIS PORTION MUST BE COMPLETED BY THE SIGNATORY OR SIGNATORIES

37 CFR 1.378(d) states: "Any petition under this section must be signed by an attorney or agent registered to practice before the Patent and Trademark Office, or by the patentee, the assignee, or other party in interest."

I certify, in accordance with 37 CFR 1.4(d)(4) that I am

◉ An attorney or agent registered to practice before the Patent and Trademark Office

○ A sole patentee

○ A joint patentee; I certify that I am authorized to sign this submission on behalf of all the other patentees.

○ A joint patentee; all of whom are signing this e-petition

○ The assignee of record of the entire interest

Patent Practitioner			
A signature of the applicant or representative is required in accordance with 37 CFR 1.33 and 10.18. Please see 37 CFR 1.4(d) for the form of the signature			
Signature	/Kerry L. Broome/	Date (YYYY-MM-DD)	2009-05-22
Name	Kerry L. Broome	Registration Number	54004

This collection of information is required by 37 CFR 1.378(c). The information is required to obtain or retain a benefit by the public which is to file (and by the USPTO to process) an application. Confidentiality is governed by 35 U.S.C. 122 and 37 CFR 1.11 and 1.14. This collection is estimated to take 1 hour to complete, including gathering, preparing, and submitting the completed application form to the USPTO. Time will vary depending upon the individual case. Any comments on the amount of time you require to complete this form and/ or suggestions for reducing this burden, should be sent to the Chief Information Officer, U.S. Patent and Trademark Office, U.S. Department of Commerce, P.O. Box 1450, Alexandria, VA 22313-1450. DO NOT SEND FEES OR COMPLETED FORMS TO THIS ADDRESS. **This form can only be used when in conjunction with EFS-Web. If this form is mailed to the USPTO, it may cause delays in reinstating the patent.**

Privacy Act Statement

The Privacy Act of 1974 (P.L. 93-579) requires that you be given certain information in connection with your submission of the attached form related to a patent application or patent. Accordingly, pursuant to the requirements of the Act, please be advised that: (1) the general authority for the collection of this information is 35 U.S.C. 2(b)(2); (2) furnishing of the information solicited is voluntary; and (3) the principal purpose for which the information is used by the U.S. Patent and Trademark Office is to process and/or examine your submission related to a patent application or patent. If you do not furnish the requested information, the U.S. Patent and Trademark Office may not be able to process and/or examine your submission, which may result in termination of proceedings or abandonment of the application or expiration of the patent.

The information provided by you in this form will be subject to the following routine uses:

1. The information on this form will be treated confidentially to the extent allowed under the Freedom of Information Act (5 U.S.C. 552) and the Privacy Act (5 U.S.C. 552a). Records from this system of records may be disclosed to the Department of Justice to determine whether the Freedom of Information Act requires disclosure of these records.

2. A record from this system of records may be disclosed, as a routine use, in the course of presenting evidence to a court, magistrate, or administrative tribunal, including disclosures to opposing counsel in the course of settlement negotiations.

3. A record in this system of records may be disclosed, as a routine use, to a Member of Congress submitting a request involving an individual, to whom the record pertains, when the individual has requested assistance from the Member with respect to the subject matter of the record.

4. A record in this system of records may be disclosed, as a routine use, to a contractor of the Agency having need for the information in order to perform a contract. Recipients of information shall be required to comply with the requirements of the Privacy Act of 1974, as amended, pursuant to 5 U.S.C. 552a(m).

5. A record related to an International Application filed under the Patent Cooperation Treaty in this system of records may be disclosed, as a routine use, to the International Bureau of the World Intellectual Property Organization, pursuant to the Patent Cooperation Treaty.

6. A record in this system of records may be disclosed, as a routine use, to another federal agency for purposes of National Security review (35 U.S.C. 181) and for review pursuant to the Atomic Energy Act (42 U.S.C. 218(c)).

7. A record from this system of records may be disclosed, as a routine use, to the Administrator, General Services, or his/her designee, during an inspection of records conducted by GSA as part of that agency's responsibility to recommend improvements in records management practices and programs, under authority of 44 U.S.C. 2904 and 2906. Such disclosure shall be made in accordance with the GSA regulations governing inspection of records for this purpose, and any other relevant (i.e., GSA or Commerce) directive. Such disclosure shall not be used to make determinations about individuals.

8. A record from this system of records may be disclosed, as a routine use, to the public after either publication of the application pursuant to 35 U.S.C. 122(b) or issuance of a patent pursuant to 35 U.S.C. 151. Further, a record may be disclosed, subject to the limitations of 37 CFR 1.14, as a routine use, to the public if the record was filed in an application which became abandoned or in which the proceedings were terminated and which application is referenced by either a published application, an application open to public inspections or an issued patent.

9. A record from this system of records may be disclosed, as a routine use, to a Federal, State, or local law enforcement agency, if the USPTO becomes aware of a violation or potential violation of law or regulation.

UNITED STATES PATENT AND TRADEMARK OFFICE

Commissioner for Patents
United States Patent and Trademark Office
P.O. Box 1450
Alexandria, VA 22313-1450
www.uspto.gov

In re Patent No. 6803598
Issue Date: October 12,2004
Application No. 09565455
Filed: May 5,2000
Attorney Docket No. 3531-102P

:
:DECISION GRANTING PETITION
:UNDER 37 CFR 1.378(c)
:

This is a decision on the electronic petition, filed May 22,2009 ,under 37 CFR 1.378(c) to accept the unintentionally delayed payment of the 3.5 year maintenance fee for the above-identified patent.

The petition is **GRANTED**.

The maintenance fee is accepted, and the above-identified patent reinstated as of May 22,2009 .
This decision also constitutes notice that the fee has been accepted. An electronic copy of the petition and this decision has been created as an entry in the Image File Wrapper. Nevertheless, petitioner should print and retain an independent copy.

Telephone inquiries related to this electronic decision should be directed to the Electronic Business Center at 1-866-217-9197.

UNITED STATES PATENT AND TRADEMARK OFFICE

Commissioner for Patents
United States Patent and Trademark Office
P.O. Box 1450
Alexandria, VA 22313-1450
www.uspto.go

Paper No. 8

AT&T CORPORATION
P.O. BOX 4110
MIDDLETOWN, NJ 07748

COPY MAILED

OCT 28 2004

OFFICE OF PETITIONS

ON PETITION

In re Application of :
Benveniste, Mathilde :
Application No. 09/565,537 :
Filed: May 5, 2000 :
Attorney Docket No. IDS 1999-0154 (1014-105) :

This is a decision on the petition under 37 C.F.R. § 1.137(b), filed October 4, 2004, to revive the above-identified application.

The petition is **GRANTED.**

This application became abandoned for failure to timely reply to the non-final Office action mailed January 30, 2004. No extensions of time under the provisions of 37 CFR 1.136(a) were obtained. Accordingly, this application became abandoned on May 1, 2004.

Petitioner has met the requirements to revive the above-identified application pursuant to 37 CFR 1.137(b).

There is no indication that the person signing the instant petition was ever given a power of attorney or authorization of agent to prosecute the above-identified application. If the person signing the instant petition desires to receive future correspondence regarding this application, the appropriate power of attorney or authorization of agent must be submitted. While a courtesy copy of this decision is being mailed to the person signing the instant petition, all future correspondence will be directed solely to the address currently of record until such time as appropriate instructions are received to the contrary.

It is not apparent whether the statement of unintentional delay was signed by a person who would have been in a position of knowing that the entire delay in filing the required reply from the due date for the reply until the filing of a grantable petition pursuant to 37 CFR 1.137(b) was unintentional. Nevertheless, in accordance with 37 CFR 10.18, the statement is accepted as constituting a certification of unintentional delay. However, in the event that petitioner has no knowledge that the delay was unintentional, petitioner must make such an inquiry to ascertain that, in fact, the delay was unintentional. If petitioner discovers that the delay was intentional, petitioner must notify the Office.

The file is now being forwarded to Technology Center 2600 for further examination on the merits.

Telephone inquiries regarding this decision should be directed to the undersigned at (571) 272-3282.

Liana Chase
Petitions Examiner
Office of Petitions
Office of the Deputy Commissioner
for Patent Examination Policy

cc: MICHAEL N. HAYNES
1341 HUNTERSFIELD CLOSE
KESWICK, VA 22947

UNITED STATES PATENT AND TRADEMARK OFFICE

Commissioner for Patents
United States Patent and Trademark Office
P.O. Box 1450
Alexandria, VA 22313-1450
www.uspto.gov

In re Patent No. 6362087
Issue Date: March 26,2002
Application No. 09565541
Filed: May 5,2000
Attorney Docket No. 68,700-006

:

:DECISION GRANTING PETITION
:UNDER 37 CFR 1.378(c)

:

This is a decision on the electronic petition, filed March 24,2008 ,under 37 CFR 1.378(c) to accept the unintentionally delayed payment of the 3.5 year maintenance fee for the above-identified patent.

The petition is GRANTED.

The maintenance fee is accepted, and the above-identified patent reinstated as of March 24,2008 . This decision also constitutes notice that the fee has been accepted. An electronic copy of the petition and this decision has been created as an entry in an Image File Wrapper. Nevertheless, petitioner should print and retain an independent copy

Telephone inquires related to this electronic decision should be directed to the Electronic Business Center at 1-866-217-9197.

Under the Paperwork Reduction Act of 1995, no persons are required to respond to a collection of information unless it displays valid OMB control number.

PETITION TO ACCEPT UNINTENTIONALLY DELAYED PAYMENT OF MAINTENANCE FEE IN AN EXPIRED PATENT (37 CFR 1.378(c))

Patent Number	Issue Date (YYYY-MM-DD)	Application Number	Filing Date (YYYY-MM-DD)	Docket Number (if applicable)
6,362,087	2002-03-26	09/565,541	2000-05-05	68,700-006

CAUTION: Maintenance fee (and surcharge, if any) payment must correctly identify: (1) the patent number and (2) the application number of the actual U.S. application leading to issuance of that patent to ensure the fee(s) is/are associated with the correct patent. 37 CFR 1.366(c) and (d).

SMALL ENTITY
☒ Patentee claims, or has previously claimed, small entity status. See 37 CFR 1.27.

LOSS OF ENTITLEMENT TO SMALL ENTITY STATUS
☐ Patentee is no longer entitled to small entity status. See 37 CFR 1.27(g)

NOT Small Entity		Small Entity	
Fee	Code	Fee	Code
○ 3 ½ year	(1551)	◉ 3 ½ year	(2551)
○ 7 ½ year	(1552)	○ 7 ½ year	(2552)
○ 11 ½ year	(1553)	○ 11 ½ year	(2553)

SURCHARGE
The surcharge required by 37 CFR 1.20(i)(2) (Fee Code 1558) must be paid as a condition of accepting unintentionally delayed payment of the maintenance fee.

MAINTENANCE FEE (37 CFR 1.20(e)-(g))
The appropriate maintenance fee must be submitted with this petition.

STATEMENT
THE UNDERSIGNED CERTIFIES THAT THE DELAY IN PAYMENT OF THE MAINTENANCE FEE TO THIS PATENT WAS UNINTENTIONAL

PETITIONER(S) REQUEST THAT THE DELAYED PAYMENT OF THE MAINTENANCE FEE BE ACCEPTED AND THE PATENT REINSTATED

THIS PORTION MUST BE COMPLETED BY THE SIGNATORY OR SIGNATORIES

37 CFR 1.378(d) states: "Any petition under this section must be signed by an attorney or agent registered to practice before the Patent and Trademark Office, or by the patentee, the assignee, or other party in interest."

I certify, in accordance with 37 CFR 1.4(d)(4) that I am

◉ An attorney or agent registered to practice before the Patent and Trademark Office

○ A sole patentee

○ A joint patentee; I certify that I am authorized to sign this submission on behalf of all the other patentees.

○ A joint patentee; all of whom are signing this e-petition

○ The assignee of record of the entire interest

Patent Practitioner			
A signature of the applicant or representative is required in accordance with 37 CFR 1.33 and 10.18. Please see 37 CFR 1.4(d) for the form of the signature			
Signature	/Randy W Tung/	Date (YYYY-MM-DD)	2002-03-26
Name	Randy W. Tung	Registration Number	31311

This collection of information is required by 37 CFR 1.378(c). The information is required to obtain or retain a benefit by the public which is to file (and by the USPTO to process) an application. Confidentiality is governed by 35 U.S.C. 122 and 37 CFR 1.11 and 1.14. This collection is estimated to take 1 hour to complete, including gathering, preparing, and submitting the completed application form to the USPTO. Time will vary depending upon the individual case. Any comments on the amount of time you require to complete this form and/ or suggestions for reducing this burden, should be sent to the Chief Information Officer, U.S. Patent and Trademark Office, U.S. Department of Commerce, P.O. Box 1450, Alexandria, VA 22313-1450. DO NOT SEND FEES OR COMPLETED FORMS TO THIS ADDRESS. **This form can only be used when in conjunction with EFS-Web. If this form is mailed to the USPTO, it may cause delays in reinstating the patent.**

Privacy Act Statement

The Privacy Act of 1974 (P.L. 93-579) requires that you be given certain information in connection with your submission of the attached form related to a patent application or patent. Accordingly, pursuant to the requirements of the Act, please be advised that: (1) the general authority for the collection of this information is 35 U.S.C. 2(b)(2); (2) furnishing of the information solicited is voluntary; and (3) the principal purpose for which the information is used by the U.S. Patent and Trademark Office is to process and/or examine your submission related to a patent application or patent. If you do not furnish the requested information, the U.S. Patent and Trademark Office may not be able to process and/or examine your submission, which may result in termination of proceedings or abandonment of the application or expiration of the patent.

The information provided by you in this form will be subject to the following routine uses:

1. The information on this form will be treated confidentially to the extent allowed under the Freedom of Information Act (5 U.S.C. 552) and the Privacy Act (5 U.S.C. 552a). Records from this system of records may be disclosed to the Department of Justice to determine whether the Freedom of Information Act requires disclosure of these record s.

2. A record from this system of records may be disclosed, as a routine use, in the course of presenting evidence to a court, magistrate, or administrative tribunal, including disclosures to opposing counsel in the course of settlement negotiations.

3. A record in this system of records may be disclosed, as a routine use, to a Member of Congress submitting a request involving an individual, to whom the record pertains, when the individual has requested assistance from the Member with respect to the subject matter of the record.

4. A record in this system of records may be disclosed, as a routine use, to a contractor of the Agency having need for the information in order to perform a contract. Recipients of information shall be required to comply with the requirements of the Privacy Act of 1974, as amended, pursuant to 5 U.S.C. 552a(m).

5. A record related to an International Application filed under the Patent Cooperation Treaty in this system of records may be disclosed, as a routine use, to the International Bureau of the World Intellectual Property Organization, pursuant to the Patent Cooperation Treaty.

6. A record in this system of records may be disclosed, as a routine use, to another federal agency for purposes of National Security review (35 U.S.C. 181) and for review pursuant to the Atomic Energy Act (42 U.S.C. 218(c)).

7. A record from this system of records may be disclosed, as a routine use, to the Administrator, General Services, or his/her designee, during an inspection of records conducted by GSA as part of that agency's responsibility to recommend improvements in records management practices and programs, under authority of 44 U.S.C. 2904 and 2906. Such disclosure shall be made in accordance with the GSA regulations governing inspection of records for this purpose, and any other relevant (i.e., GSA or Commerce) directive. Such disclosure shall not be used to make determinations about individuals.

8. A record from this system of records may be disclosed, as a routine use, to the public after either publication of the application pursuant to 35 U.S.C. 122(b) or issuance of a patent pursuant to 35 U.S.C. 151. Further, a record may be disclosed, subject to the limitations of 37 CFR 1.14, as a routine use, to the public if the record was filed in an application which became abandoned or in which the proceedings were terminated and which application is referenced by either a published application, an application open to public inspections or an issued patent.

9. A record from this system of records may be disclosed, as a routine use, to a Federal, State, or local law enforcement agency, if the USPTO becomes aware of a violation or potential violation of law or regulation.

UNITED STATES PATENT AND TRADEMARK OFFICE

Commissioner for Patents
United States Patent and Trademark Office
P.O. Box 1450
Alexandria, VA 22313-1450
www.uspto.gov

In re Patent No. 6585112
Issue Date: July 1,2003
Application No. 09565550
Filed: May 5,2000
Attorney Docket No.

:

:DECISION GRANTING PETITION
:UNDER 37 CFR 1.378(c)

:

This is a decision on the electronic petition, filed October 2,2007 ,under 37 CFR 1.378(c) to accept the unintentionally delayed payment of the 3.5 year maintenance fee for the above-identified patent.

The petition is GRANTED.

The maintenance fee is accepted, and the above-identified patent reinstated as of October 2,2007 . This decision also constitutes notice that the fee has been accepted. An electronic copy of the petition and this decision has been created as an entry in an Image File Wrapper. Nevertheless, petitioner should print and retain an independent copy

Telephone inquires related to this electronic decision should be directed to the Electronic Business Center at 1-866-217-9197.

Under the Paperwork Reduction Act of 1995, no persons are required to respond to a collection of information unless it displays valid OMB control number.

PETITION TO ACCEPT UNINTENTIONALLY DELAYED PAYMENT OF MAINTENANCE FEE IN AN EXPIRED PATENT (37 CFR 1.378(c))

Patent Number	Issue Date (YYYY-MM-DD)	Application Number	Filing Date (YYYY-MM-DD)	Docket Number (if applicable)
6,585,112	2003-07-01	09/565,550	2000-05-05	

CAUTION: Maintenance fee (and surcharge, if any) payment must correctly identify: (1) the patent number and (2) the application number of the actual U.S. application leading to issuance of that patent to ensure the fee(s) is/are associated with the correct patent. 37 CFR 1.366(c) and (d).

SMALL ENTITY
☒ Patentee claims, or has previously claimed, small entity status. See 37 CFR 1.27.

LOSS OF ENTITLEMENT TO SMALL ENTITY STATUS
☐ Patentee is no longer entitled to small entity status. See 37 CFR 1.27(g)

NOT Small Entity		Small Entity	
Fee	Code	Fee	Code
○ 3 ½ year	(1551)	◉ 3 ½ year	(2551)
○ 7 ½ year	(1552)	○ 7 ½ year	(2552)
○ 11 ½ year	(1553)	○ 11 ½ year	(2553)

SURCHARGE
The surcharge required by 37 CFR 1.20(i)(2) (Fee Code 1558) must be paid as a condition of accepting unintentionally delayed payment of the maintenance fee.

MAINTENANCE FEE (37 CFR 1.20(e)-(g))
The appropriate maintenance fee must be submitted with this petition.

STATEMENT
THE UNDERSIGNED CERTIFIES THAT THE DELAY IN PAYMENT OF THE MAINTENANCE FEE TO THIS PATENT WAS UNINTENTIONAL

PETITIONER(S) REQUEST THAT THE DELAYED PAYMENT OF THE MAINTENANCE FEE BE ACCEPTED AND THE PATENT REINSTATED

THIS PORTION MUST BE COMPLETED BY THE SIGNATORY OR SIGNATORIES

37 CFR 1.378(d) states: "Any petition under this section must be signed by an attorney or agent registered to practice before the Patent and Trademark Office, or by the patentee, the assignee, or other party in interest."

I certify, in accordance with 37 CFR 1.4(d)(4) that I am

○ An attorney or agent registered to practice before the Patent and Trademark Office

○ A sole patentee

◉ A joint patentee; I certify that I am authorized to sign this submission on behalf of all the other patentees.

○ A joint patentee; all of whom are signing this e-petition

○ The assignee of record of the entire interest

Under the Paperwork Reduction Act of 1995, no persons are required to respond to a collection of information unless it displays valid OMB control number.

A Joint Patentee and I certify that I am authorized to sign this submission on behalf of all the other patentees			
A signature of the applicant or representative is required in accordance with 37 CFR 1.33 and 10.18. Please see 37 CFR 1.4(d) for the form of the signature.			
Signature	/Adam Levin/	Date (YYYY-MM-DD)	2007-10-02
Name	Adam A Levin		

This collection of information is required by 37 CFR 1.378(c). The information is required to obtain or retain a benefit by the public which is to file (and by the USPTO to process) an application. Confidentiality is governed by 35 U.S.C. 122 and 37 CFR 1.11 and 1.14. This collection is estimated to take 1 hour to complete, including gathering, preparing, and submitting the completed application form to the USPTO. Time will vary depending upon the individual case. Any comments on the amount of time you require to complete this form and/ or suggestions for reducing this burden, should be sent to the Chief Information Officer, U.S. Patent and Trademark Office, U.S. Department of Commerce, P.O. Box 1450, Alexandria, VA 22313-1450. DO NOT SEND FEES OR COMPLETED FORMS TO THIS ADDRESS. **This form can only be used when in conjunction with EFS-Web. If this form is mailed to the USPTO, it may cause delays in reinstating the patent.**

Privacy Act Statement

The Privacy Act of 1974 (P.L. 93-579) requires that you be given certain information in connection with your submission of the attached form related to a patent application or patent. Accordingly, pursuant to the requirements of the Act, please be advised that: (1) the general authority for the collection of this information is 35 U.S.C. 2(b)(2); (2) furnishing of the information solicited is voluntary; and (3) the principal purpose for which the information is used by the U.S. Patent and Trademark Office is to process and/or examine your submission related to a patent application or patent. If you do not furnish the requested information, the U.S. Patent and Trademark Office may not be able to process and/or examine your submission, which may result in termination of proceedings or abandonment of the application or expiration of the patent.

The information provided by you in this form will be subject to the following routine uses:

1. The information on this form will be treated confidentially to the extent allowed under the Freedom of Information Act (5 U.S.C. 552) and the Privacy Act (5 U.S.C. 552a). Records from this system of records may be disclosed to the Department of Justice to determine whether the Freedom of Information Act requires disclosure of these record s.

2. A record from this system of records may be disclosed, as a routine use, in the course of presenting evidence to a court, magistrate, or administrative tribunal, including disclosures to opposing counsel in the course of settlement negotiations.

3. A record in this system of records may be disclosed, as a routine use, to a Member of Congress submitting a request involving an individual, to whom the record pertains, when the individual has requested assistance from the Member with respect to the subject matter of the record.

4. A record in this system of records may be disclosed, as a routine use, to a contractor of the Agency having need for the information in order to perform a contract. Recipients of information shall be required to comply with the requirements of the Privacy Act of 1974, as amended, pursuant to 5 U.S.C. 552a(m).

5. A record related to an International Application filed under the Patent Cooperation Treaty in this system of records may be disclosed, as a routine use, to the International Bureau of the World Intellectual Property Organization, pursuant to the Patent Cooperation Treaty.

6. A record in this system of records may be disclosed, as a routine use, to another federal agency for purposes of National Security review (35 U.S.C. 181) and for review pursuant to the Atomic Energy Act (42 U.S.C. 218(c)).

7. A record from this system of records may be disclosed, as a routine use, to the Administrator, General Services, or his/her designee, during an inspection of records conducted by GSA as part of that agency's responsibility to recommend improvements in records management practices and programs, under authority of 44 U.S.C. 2904 and 2906. Such disclosure shall be made in accordance with the GSA regulations governing inspection of records for this purpose, and any other relevant (i.e., GSA or Commerce) directive. Such disclosure shall not be used to make determinations about individuals.

8. A record from this system of records may be disclosed, as a routine use, to the public after either publication of the application pursuant to 35 U.S.C. 122(b) or issuance of a patent pursuant to 35 U.S.C. 151. Further, a record may be disclosed, subject to the limitations of 37 CFR 1.14, as a routine use, to the public if the record was filed in an application which became abandoned or in which the proceedings were terminated and which application is referenced by either a published application, an application open to public inspections or an issued patent.

9. A record from this system of records may be disclosed, as a routine use, to a Federal, State, or local law enforcement agency, if the USPTO becomes aware of a violation or potential violation of law or regulation.

UNITED STATES PATENT AND TRADEMARK OFFICE

UNITED STATES DEPARTMENT OF COMMERCE
United States Patent and Trademark Office
Address: COMMISSIONER FOR PATENTS
P.O. Box 1450
Alexandria, Virginia 22313-1450
www.uspto.gov

APPLICATION NO.	FILING DATE	FIRST NAMED INVENTOR	ATTORNEY DOCKET NO.	CONFIRMATION NO.
09/565,556	05/05/2000	Hercilio Rivas	99-395	4106

7590 02/25/2005

Gregory P LaPointe
Bachman & LaPointe P C
900 Chapel Street
Suite 1201
New Haven, CT 06510-2802

EXAMINER
TOOMER, CEPHIA D

ART UNIT	PAPER NUMBER
1714	#26.

DATE MAILED: 02/25/2005

Please find below and/or attached an Office communication concerning this application or proceeding.

The request for deferral/suspension of action under 37 CFR 1.103 has been approved.

UNITED STATES PATENT AND TRADEMARK OFFICE

COMMISSIONER FOR PATENTS
UNITED STATES PATENT AND TRADEMARK OFFICE
WASHINGTON, D.C. 20231
www.uspto.gov

Paper No. 3

MAIL

FEB 04 2002

DIRECTOR OFFICE
TECHNOLOGY CENTER 2600

WAGNER, MURABITO & HAO LLP
TWO NORTH MARKET STREET
THIRD FLOOR
SAN JOSE, CA 95113

In re Application of:
Robert W. Sherburne
Application No.: 09/565,562
Filed: May 4, 2000
For: METHOD AND APPARATUS FOR RENDERING A QUADRANGLE PRIMITIVE

DECISION ON REQUEST TO WITHDRAW AS ATTORNEY

This is a decision on the Request for Withdrawal as Attorney or Agent of record filed, November 2, 2001.

A grantable request to withdraw as attorney of record should indicate thereon the present mailing addresses of the attorney(s) who is/are withdrawing from the record and of the applicant. The request for withdrawal must be signed by every attorney seeking to withdraw or contain a clear indication that one attorney is signing on behalf of another/others. A request to withdraw will not be approved unless at least 30 (thirty) days would remain between the date of approval and the later of the expiration date of a time to file a response or the expiration date of the maximum time period which can be extended under 37 C.F.R. § 1.136(a). The effective date of withdrawal being the date of decision and not the date of request. See M.P.E.P. § 402.06. 37 C.F.R. § 1.36 further requires that the applicant or patent owner be notified of the withdrawal of the attorney or agent.

The request is **GRANTED**.

It is noted that the following attorneys have not been withdrawn and are still of record: Wilfred H. Lam; Patrick W. Ma; Christopher R. Novak.

All future communications from the Office will be directed to the below-listed address until otherwise notified by applicant. This correspondence address is provided by the withdrawn attorney(s). Applicant is reminded of the obligation to promptly notify the Patent and Trademark Office (Office) of any change in correspondence address to ensure receipt of all communications from the Office.

Reinhard Eisenzopf

Reinhard J. Eisenzopf
Special Program Examiner
Technology Center 2600
Communications
(703) 305-4711

cc: SILICON GRAPHICS
1600 AMPHITHEATRE PARKWAY
MOUNTAIN VIEW, CA 94043-1351

SPE RESPONSE FOR CERTIFICATE OF CORRECTION

Paper No.:20080212

DATE : March 3, 2008

TO SPE OF : ART UNIT 2155

SUBJECT : Request for Certificate of Correction on Patent No.: 6912576

A response is requested with respect to the accompanying request for a certificate of correction.

Please complete this form and return with file, within **7** days to:
Certificates of Correction Branch - PK 3-910
Palm location **7590** - Tel. No. 305-8201

With respect to the change(s) requested, correcting Office and/or Applicant's errors, should the patent read as shown in the certificate of correction? No new matter should be introduced, nor should the scope or meaning of the claims be changed.

Thank You For Your Assistance **Certificates of Correction Branch**

The request for issuing the above-identified correction(s) is hereby:
Note your decision on the appropriate box.

☒ **Approved** **All** changes apply.

☐ **Approved in Part** Specify below which changes **do not** apply.

☐ **Denied** State the reasons for denial below.

Comments:

SPE: /SN/ **Art Unit** 2155

UNITED STATES PATENT AND TRADEMARK OFFICE

Commissioner for Patents
United States Patent and Trademark Office
P.O. Box 1450
Alexandria, VA 22313-1450
www.uspto.gov

DLA PIPER RUDNICK GRAY CARY USA
2000 UNIVERSITY AVENUE
E. PALO ALTO, CA 94303-2248

COPY MAILED

JAN 0 4 2005

OFFICE OF PETITIONS

In re Application of	:	
Rajiv Puranik et al	:	
Application No. 09/565,672	:	ON PETITION
Filed: May 4, 2000	:	
Attorney Docket No. 01295-991100	:	

This is a decision on the petition under 37 CFR 1.137(b), filed November 18, 2004, to revive the above-identified application.

The petition is **GRANTED**.

The above-identified application became abandoned for failure to submit the issue fee in a timely manner in reply to the Notice of Allowance mailed August 2, 2004, which set a statutory period for reply of three (3) months. Accordingly, the above-identified application became abandoned on November 3, 2004.

Telephone inquiries concerning this decision should be directed to Wan Laymon at (571) 272-3220.

This matter is being referred to the Publishing Division.

Wan Laymon
Petitions Examiner
Office of Petitions
Office of the Deputy Commissioner
for Patent Examination Policy

UNITED STATES PATENT AND TRADEMARK OFFICE

COMMISSIONER FOR PATENTS
UNITED STATES PATENT AND TRADEMARK OFFICE
P.O. BOX 1450
ALEXANDRIA, VA 22313-1450
www.uspto.gov

Kramer Levin Naftalis & Frankel LLP
Intellectual Property Department
919 Third Avenue
New York, NY 10022

COPY MAILED

NOV 2 9 2004

OFFICE OF PETITIONS

In re Application of :
Alaa Eldin M. Adris, et al. :
Application No. 09/565,779 : ON PETITION
Filed: May 5, 2000 :
Attorney Docket No. 0080577-0060 :

This is a decision on the petition under 37 CFR 1.137(b), filed August 17, 2004, to revive the above-identified application.

The petition is **GRANTED**.

37 CFR 1.137(b)(3) requires a statement that the entire delay in filing the required reply from the due date for the reply until the filing of a grantable petition pursuant to 37 CFR 1.137(b) was unintentional. Since the statement contained in the instant petition varies from the language required by 37 CFR 1.137(b)(3), the statement is being construed as the statement required by 37 CFR 1.137(b)(3) and petitioner must notify the Office if this is **not** a correct interpretation of the statement contained in the instant petition.

Telephone inquiries concerning this decision should be directed to the undersigned at (571) 272-3223.

The application file is being referred to Technology Center 1700.

Marianne E. Jenkins

Marianne E. Jenkins
Petitions Examiner
Office of Petitions
Office of the Deputy Commissioner
for Patent Examination Policy

SPE RESPONSE FOR CERTIFICATE OF CORRECTION

DATE : March 4, 2008

TO SPE OF : ART UNIT 3627
SUBJECT : Request for Certificate of Correction for Appl. No /09/1565810 patent 7272509

Please respond to this request for a certificate of correction within 7 days.

FOR IFW FILES:

Please review the requested changes/corrections as shown in the **COCIN** document(s) in the IFW application image. No new matter should be introduced, nor should the scope or meaning of the claims be changed.

Please complete the response (see below) and forward the completed response to scanning using document code **COCX**.

FOR PAPER FILES:

Please review the requested changes/corrections as shown in the attached certificate of correction. Please complete this form (see below) and forward it with the file to:

Certificates of Correction Branch (CofC)
Randolph Square – 9D10-A
Palm Location 7580

Magdalene Talley

Certificates of Correction Branch
571-272-0423

Thank You For Your Assistance

The request for issuing the above-identified correction(s) is hereby:
Note your decision on the appropriate box.

- ☒ **Approved** — **All** changes apply.
- ☐ **Approved in Part** — Specify below which changes **do not** apply.
- ☐ **Denied** — State the reasons for denial below.

Comments: All Changes Have Been Approved.

/ F Zeender/
SPE

3627
Art Unit

NOTICE RE: CERTIFICATES OF CORRECTION

DATE : 11-6-03 Paper No.: 18

TO : Supervisor, Art Unit 1600 1646

SUBJECT : Certificate of Correction Request in Patent No.: 6433147

A response to the following question is requested with respect to the accompanying request for a certificate of correction.

With respect to the change(s) requested, correcting Office and/or Applicant's errors, should the pate read as shown in the certificate of correction? No new matter should be introduced, nor should the scope o meaning of the claims be changed.

PLEASE COMPLETE THIS FORM AND RETURN WITH FILE, WITHIN 7 DAYS, TO CERTIFICATES OF CORRECTION BRANCH - PK 3-915/922 PALM LOCATION 7580 - TEL. N0. 305-8309

THANK YOU FOR YOUR ASSISTANCE!

Note your decision, regarding the changes requested in the Request for Certificate of Correction, by placing a check mark (✓) in the box that reflects your decision, which corresponds to the question checked above.

☑ YES ☐ NO ☐ Comments below

☑ Comments: See Examiner's identification of 2nd requested correction = Col. 2 of facing page. Please correct

YVONNE EYLER, PH.D
SUPERVISORY PATENT EXAMINER
TECHNOLOGY CENTER 1600

Supervisor

1646
Art Unit

UNITED STATES PATENT AND TRADEMARK OFFICE

CERTIFICATE OF CORRECTION

PATENT NO. : 6,433,147 B1
DATED : August 13, 2002
INVENTOR(S) : Ni et al.

It is certified that error appears in the above-identified patent and that said Letters Patent is hereby corrected as shown below:

Title page,
Item [54], Title, please delete "**DEATH DOMAIN CONTAINING RECEPTOR-4**" and insert therein -- **DEATH DOMAIN CONTAINING RECEPTOR 4** --.

Item [56], **References Cited**, OTHER PUBLICATIONS, please delete "cDND" and insert therein -- cDNA --.

Drawings,
In the sheets containing Figures 1-6, please delete the current Figures 1-4, 5A-C, and 6A-B and replace with the attached Figures 1A-C, 2A-C, 3, 4, 5A-C, and 6.

Column 4,
Line 47, please delete "FIG. 1 shows" and insert therein -- FIGS. 1A through C show --.
Line 57, please delete "FIG. 2 shows" and insert therein -- FIGS. 2A through C show --.
Line 67, please delete "FIG. 1" and insert therein -- FIGS. 1A through C --.

Column 5,
Line 4, please delete "FIG. 1" and insert therein -- FIGS. 1A through C --.
Line 31, please delete "(FIG. 2)" and insert therein -- (FIGS. 2A through C) --.

Column 6,
Line 27, please delete "FIG. 2" and insert therein -- FIGS. 2A through C --

Column 44,
Line 4, please delete "FIG.2" and insert therein -- FIGS. 2A through C --.

Signed and Sealed this

Sixteenth Day of December, 2003

JAMES E. ROGAN
Director of the United States Patent and Trademark Office

```
        10                  30                  50
TTCGGGCACGAGGGCAGGATGGCGCCACCACCAGCTAGAGTACATCTAGGTGCGTTCCTG
                  M  A  P  P  P  A  R  V  H  L  G  A  F  L
        70                  90                 110
GCAGTGACTCCGAATCCCGGGAGCGCAGCGAGTGGGACAGAGGCAGCCGCGGCCACACCC
A  V  T  P  N  P  G  S  A  A  S  G  T  E  A  A  A  A  T  P
       130                 150                 170
AGCAAAGTGTGGGGCTCTTCCGCGGGGAGGATTGAACCACGAGGCGGGGGCCGAGGAGCG
S  K  V  W  G  S  S  A  G  R  I  E  P  R  G  G  G  R  G  A
       190                 210                 230
CTCCCTACCTCCATGGGACAGCACGGACCCAGTGCCCGGGCCCGGGCAGGGCGCGCCCCA
L  P  T  S  M  G  Q  H  G  P  S  A  R  A  R  A  G  R  A  P
       250                 270                 290
GGACCCAGGCCGGCGCGGGAAGCCAGCCCTCGGCTCCGGGTCCACAAGACCTTCAAGTTT
G  P  R  P  A  R  E  A  S  P  R  L  R  V  H  K  T  F  K  F
       310                 330                 350
GTCGTCGTCGGGGTCCTGCTGCAGGTCGTACCTAGCTCAGCTGCAACCATCAAACTTCAT
V  V  V  G  V  L  L  Q  V  V  P  S  S  A  A  T  I  K  L  H
       370                 390                 410
GATCAATCAATTGGCACACAGCAATGGGAACATAGCCCTTTGGGAGAGTTGTGTCCACCA
D  Q  S  I  G  T  Q  Q  W  E  H  S  P  L  G  E  L  C  P  P
       430                 450                 470
GGATCTCATAGATCAGAACGTCCTGGAGCCTGTAACCGGTGCACAGAGGGTGTGGGTTAC
G  S  H  R  S  E  R  P  G  A  C  N  R  C  T  E  G  V  G  Y
       490                 510                 530
ACCAATGCTTCCAACAATTTGTTTGCTTGCCTCCCATGTACAGCTTGTAAATCAGATGAA
T  N  A  S  N  N  L  F  A  C  L  P  C  T  A  C  K  S  D  E
       550                 570                 590
GAAGAGAGAAGTCCCTGCACCACGACCAGGAACACAGCATGTCAGTGCAAACCAGGAACT
E  E  R  S  P  C  T  T  T  R  N  T  A  C  Q  C  K  P  G  T
       610                 630                 650
TTCCGGAATGACAATTCTGCTGAGATGTGCCGGAAGTGCAGCACAGGGTGCCCCAGAGGG
F  R  N  D  N  S  A  E  M  C  R  K  C  S  T  G  C  P  R  G
       670                 690                 710
ATGGTCAAGGTCAAGGATTGTACGCCCTGGAGTGACATCGAGTGTGTCCACAAAGAATCA
M  V  K  V  K  D  C  T  P  W  S  D  I  E  C  V  H  K  E  S
```

FIG.1A

```
        730                 750                 770
GGCAATGGACATAATATATGGGTGATTTTGGTTGTGACTTTGGTTGTTCCGTTGCTGTTG
G  N  G  H  N  I  W  V  I  L  V  V  T  L  V  V  P  L  L  L
               ********************************************
        790                 810                 830
GTGGCTGTGCTGATTGTCTGTTGTTGCATCGGCTCAGGTTGTGGAGGGGACCCCAAGTGC
V  A  V  L  I  V  C  C  C  I  G  S  G  C  G  G  D  P  K  C
*************************************
        850                 870                 890
ATGGACAGGGTGTGTTTCTGGCGCTTGGGTCTCCTACGAGGGCCTGGGGCTGAGGACAAT
M  D  R  V  C  F  W  R  L  G  L  L  R  G  P  G  A  E  D  N
        910                 930                 950
GCTCACAACGAGATTCTGAGCAACGCAGACTCGCTGTCCACTTTCGTCTCTGAGCAGCAA
A  H  N  E  I  L  S  N  A  D  S  L  S  T  F  V  S  E  Q  Q
        970                 990                1010
ATGGAAAGCCAGGAGCCGGCAGATTTGACAGGTGTCACTGTACAGTCCCCAGGGGAGGCA
M  E  S  Q  E  P  A  E  L  T  G  V  T  V  Q  S  P  G  E  A
       1030                1050                1070
CAGTGTCTGCTGGGACCGGCAGAAGCTGAAGGGTCTCAGAGGAGGAGGCTGCTGGTTCCA
Q  C  L  L  G  P  A  E  A  E  G  S  Q  R  R  R  L  L  V  P
       1090                1110                1130
GCAAATGGTGCTGACCCCACTGAGACTCTGATGCTGTTCTTTGACAAGTTTGCAAACATC
A  N  G  A  D  P  T  E  T  L  M  L  F  F  D  K  F  A  N  I
       1150                1170                1190
GTGCCCTTTGACTCCTGGGACCAGCTCATGAGGCAGCTGGACCTCACGAAAAATGAGATC
V  P  F  D  S  W  D  Q  L  M  R  Q  L  D  L  T  K  N  E  I
       1210                1230                1250
GATGTGGTCAGAGCTGGTACAGCAGGCCCAGGGGATGCCTTGTATGCAATGCTGATGAAA
D  V  V  R  A  G  T  A  G  P  G  D  A  L  Y  A  M  L  M  K
       1270                1290                1310
TGGGTCAACAAAACTGGACGGAACGCCTCGATCCACACCCTGCTGGATGCCTTGGAGAGG
W  V  N  K  T  G  R  N  A  S  I  H  T  L  L  D  A  L  E  R
       1330                1350                1370
ATGGAAGAGAGACATGCAAAAGAGAAGATTCAGGACCTCTTGGTGGACTCTGGAAAGTTC
M  E  E  R  H  A  K  E  K  I  Q  D  L  L  V  D  S  G  K  F
```

FIG.1B

1390 1410 1430
ATCTACTTAGAAGATGGCACAGGCTCTGCCGTGTCCTTGGAGTGAAAGACTCTTTTTACC
I Y L E D G T G S A V S L E
1450 1470 1490
AGAGGTTTCCTCTTAGGTGTTAGGAGTTAATACATATTAGGTTTTTTTTTTTTTTAACAT
1510 1530 1550
GTATACAAAGTAAATTCTTAGCCACGTGTATTGGCTCCTGCCTGTAATCCCATCACTTTG
1570 1590 1610
GGAGGCTGACGCCGGTGGATCCACTTGAGGTCCGAAGTTCCAAGACCAGCCCTGAACCAA
1630 1650 1670
CATCGTGGAAATGCCCGTCTTTTACAAAAAAATACCAAAAATTCAACTGGAATGTGCATG
1690 1710 1730
GTGTGTGCCATCATTTCCTCGGCTAACTACGGGAGGTCTGAGGCCAGGAGAATCCACTTG
1750 1770 1790
AACCCCACGAAGGACAGTGTAGACTGCAGATTGCACCACTGCACTCCCAGCCTGGGAACA
1810 1830 1850
CAGAGCAAGACTCTGTCTCAAGATAAAATAAAATAAACTTGAAAGAATTATTGCCCGACT
1870 1890 1910
GAGGCTCACATGCCAAAGGAAAATCTGGTTCTCCCCTGAGCTGGCCTCCGTGTGTTTCCT
1930 1950 1970
TATCATGGTGGTCAATTGGAGGTGTTAATTTGAATGGATTAAGGAACACCTAGAACACTG
1990 2010 2030
GTAAGGCATTATTTCTGGGACATTATTTCTGGGCATGTCTTCGAGGGTGTTTCCAGAGGG
2050 2070 2090
GATTGGCATGCGATCGGGTGGACTGAGTGGAAAAGACCTACCCTTAATTTGGGGGGGCAC
2110 2130 2150
CGTCCGACAGACTGGGGAGCAAGATAGAAGAAAACAAAAAAAAAAAAAAAAA

FIG.1C

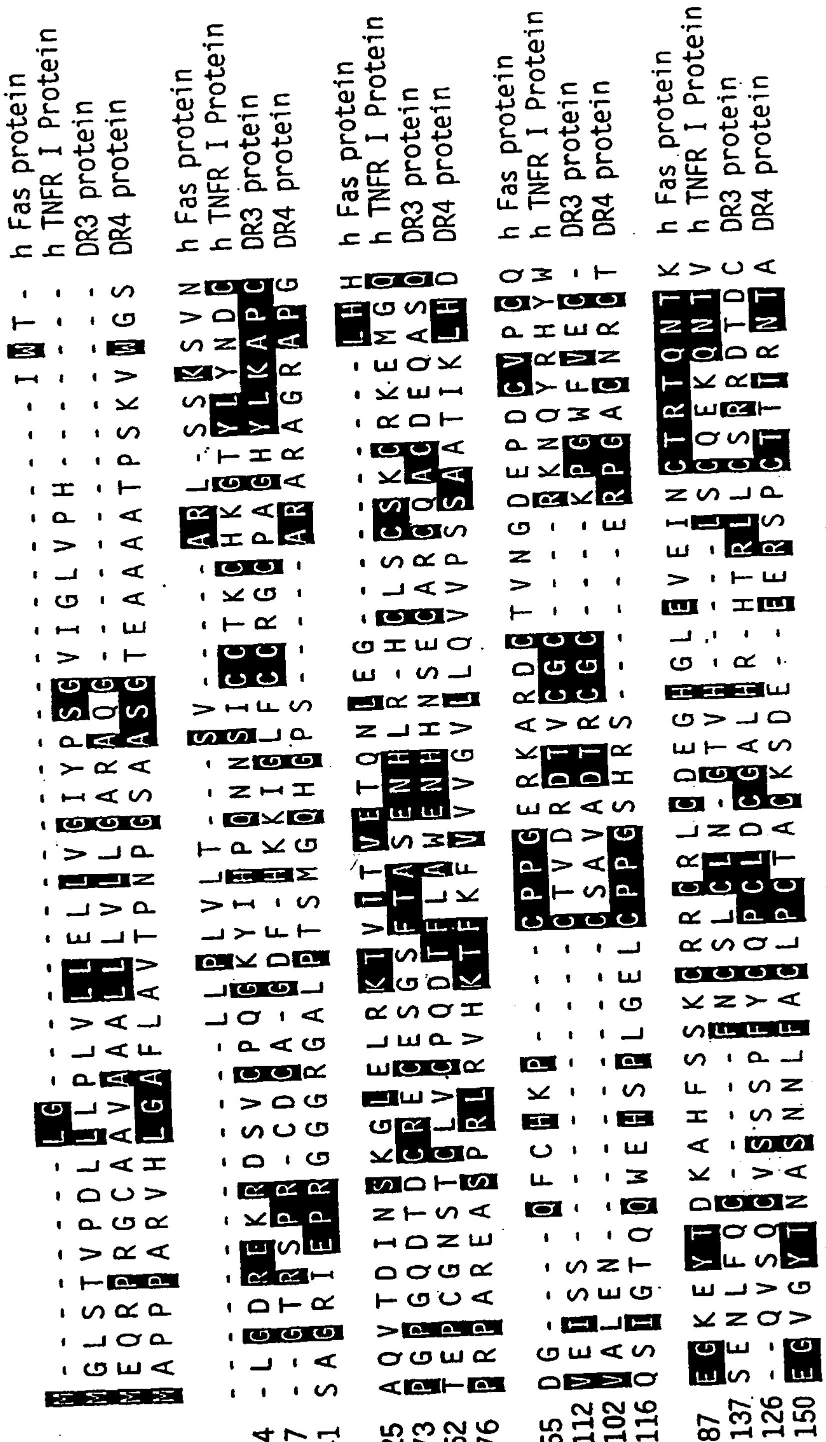

FIG.2A

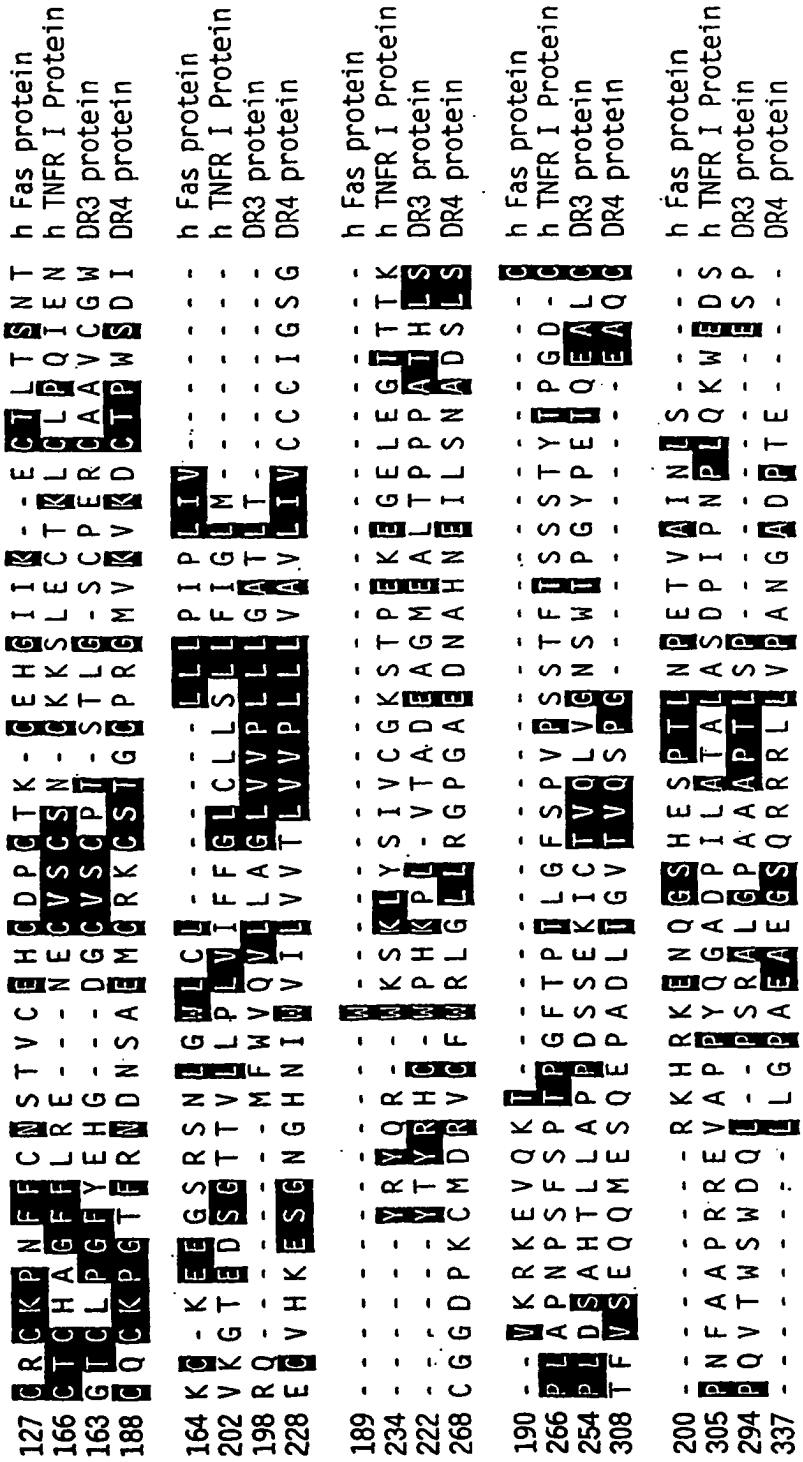
127 GRCKPNFFCNSTVCEHCDPCTK-CEHGIIK--ECTLTSNT h Fas protein
166 CTCHAGFFLRE--NECVSCSN-CKKSLECTKLCLPQIEN h TNFR I Protein
163 GTCLPGFYEHG--DGCVSCPT-STLG-SCPERCAVCGW DR3 protein
188 QCKPGTFRNDNSAEMCRKCSTGPRGMVKVKDCTPWSDI DR4 protein
164 KQ-KEEGSRSNGLLCL--------LLLPIPLIV-------- h Fas protein
202 VKGTEDSGTTVLPLVIFFGLCLLSLLFIGLM-------- h TNFR I Protein
198 RQ-------MFWVQVLLAGLVVPLLLGATL-T-------- DR3 protein
228 EGVHKESGNGHNIBVILVVTLVVPLLLVAVLIVCCCIGSG DR4 protein
189 ---------------BBKLYSIVCGKSTPEKEGELEGITTK h Fas protein
234 ---------YRYQR-BKPLKPHCPL-VTADEAGMEALTPPAIHLS h TNFR I Protein
222 ---------YTYRHCPLBBPHKPL-VTADEAGMEALTPPAIHLS DR3 protein
268 CGGDPKCMDRVCFBRLGLLRGPGAEDNAHNEILSNADSLS DR4 protein
190 --VKKEVQKT--------TPGFSPVPSSTFISSSTYIPGD-CC h Fas protein
266 PLAPNPSFSPTPGFTPTLGFSPVPSSTFISSSTYIPGD-CC h TNFR I Protein
254 PLDSAHTLLAPPDSSEKICTVQLVGNSWHPGYPEIQEALCC DR3 protein
308 TFVSEQMESQEPADLIGVTVQSPG-------EAQC DR4 protein
200 ---------RKHRKENQGSHESPTLNPETVAINLS------ h Fas protein
305 PNFAAPRREVAPPYQGADPILATALASDPIPNPLQKWEDS h TNFR I Protein
294 PQVTWSWDQ--PPSRALGPAAPTLSP-------ESP DR3 protein
337 ---------LGPAEAGSQRRLLVPANGADPTE------ DR4 protein

FIG.2B

```
226 ---------DVDLSKYITTIAGVMTLSQVKGFVRKNGVNEA  h Fas protein
345 AHKPQSLDTDDPATLYAVVENVPPL-RWKEFVRRLGLSDH  h TNFR I Protein
322 AGSPAMMLQPGPQ-LYDVMDAVPAR-RWKEFVRTLGLREA  DR3 protein
363 ---------TLML--FFDKFANIVPFDSWDQLMRQLDLTKN  DR4 protein

258 KIDEIKNDNVQDTAEQKVQLLRNWHQLHGKKEA-YDTLIK  h Fas protein
384 EIDRLELQNGRCLREAQYSMLATWRRRTPRREATLELLGR  h TNFR I Protein
360 EIEAVEVEIGR-FRDQQYEMLKRWRQQQP---AGLGAVYA  DR3 protein
393 EIDVVRAGTA-GPGDALYAMLMKWVNKTGRNAS-IHTLLD  DR4 protein

297 DLKKANLCTLAEKIQTIILKDITSDSENSNFRNEIQSLV   h Fas protein
424 VLRDMDLLGCLEDIEEAL--------CGPAALPPAPSLLR   h TNFR I Protein
396 ALERMGLDGCVEDL-------------RSRLQRGP       DR3 protein
431 ALERMEERHAKEKIQDLLVDSGKFIYLEDGTGSAVSLE     DR4 protein
```

FIG.2C

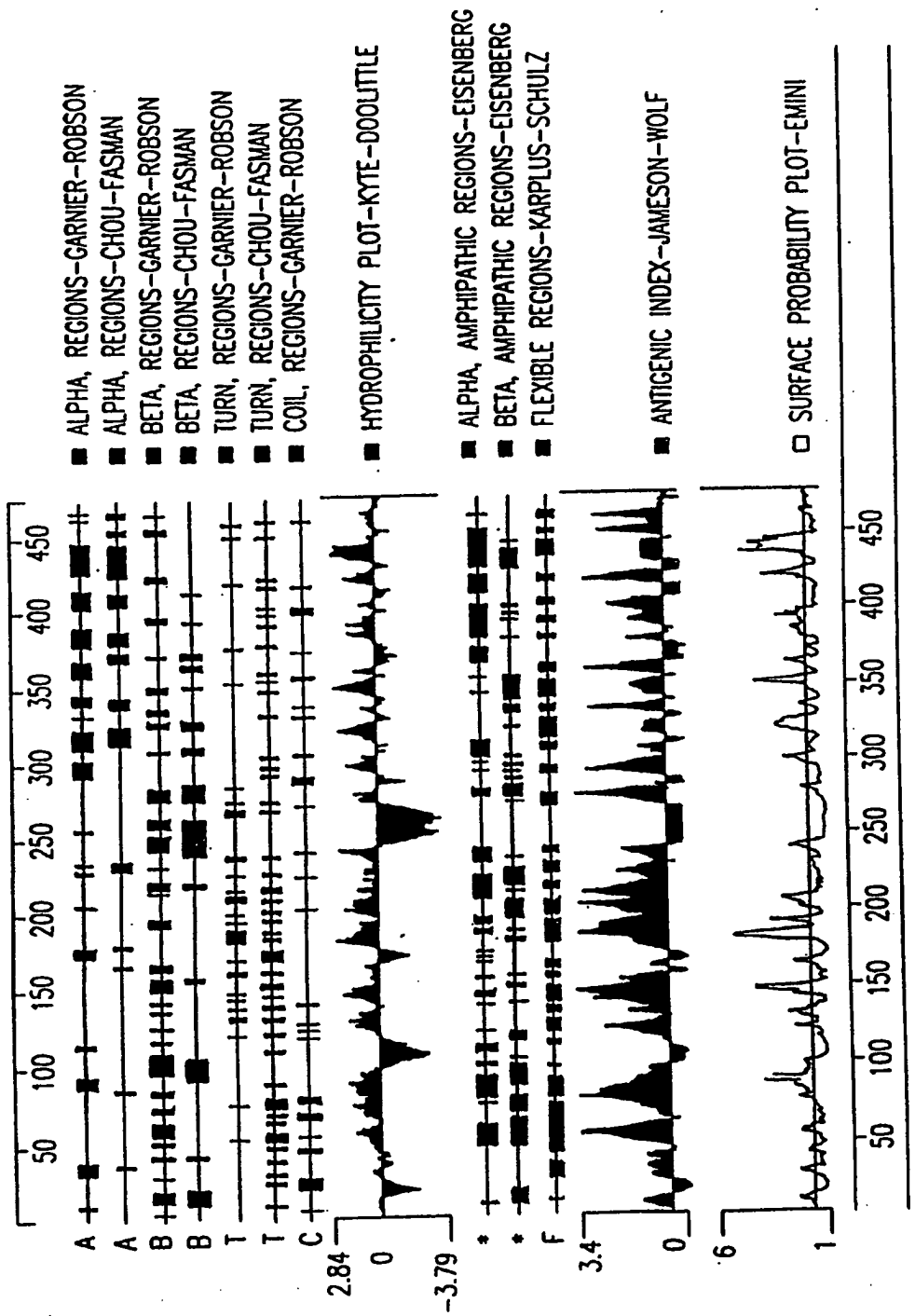
ALPHA, REGIONS-GARNIER-ROBSON
ALPHA, REGIONS-CHOU-FASMAN
BETA, REGIONS-GARNIER-ROBSON
BETA, REGIONS-CHOU-FASMAN
TURN, REGIONS-GARNIER-ROBSON
TURN, REGIONS-CHOU-FASMAN
COIL, REGIONS-GARNIER-ROBSON
HYDROPHILICITY PLOT-KYTE-DOOLITTLE
ALPHA, AMPHIPATHIC REGIONS-EISENBERG
BETA, AMPHIPATHIC REGIONS-EISENBERG
FLEXIBLE REGIONS-KARPLUS-SCHULZ
ANTIGENIC INDEX-JAMESON-WOLF
SURFACE PROBABILITY PLOT-EMINI
50 100 150 200 250 300 350 400 450
2.84
0
-3.79
3.4
0
6
1

FIG.3

HTOIY07R

```
  1 GGCANAGGTN CGTACCTAGC TCACCTGCAA CCATCAAACT TNATGATCAA
 51 TCAATTGGCA CACAGCAATG GGAAACATAG CCCTTTGGAA GANTTGTNTC
101 CACCAGGATC TCATAGATCA AAACATCCTG GGAGCCTGTT AACCGGTGCC
151 CCAAAGGNTG GTCAAGGTCA AGGAATTGTT NCGCCCTGGA AGTGAACATC
201 GAGTGTNTCC ACAAAGGATT CAGGCAATGG GACATAAATA TATGGGTGAA
251 TTTTGGTTGT GAACTTTGGT TGNTCCCGTT GNTGTTGNTG GCTGTGCTGA
301 TTGTTTGTTG TTGCATCGGC TTCAGGTTNT GGAGGGGGAC CCAAGTGCAT
351 GGACAGGGTG TGTTTCTGGG GTTTGGGTCT CTTAGAGGGC NTGGGTTANG
401 GCANGTTCAC AAGGGTTTTA GCAANG
```

HTXEY80R

```
  1 TGGGGCTGAG GACAATGCTG ACNACGAGAT TCTGAGCAAC GCAGNACTNG
 51 CTGTCCACTT TCGTCTNTGN GCAGCAAATG GAAAGCCAGG AGCCGGCAGA
101 TTTGACAGGT GTCACTGTAC AGTCCCCAGG GGAGGCACAG TGTCTGCTGG
151 TGAGTTGGGG ACAGGCCCTT GCAAGACCTT GTGAGGCAGG GGGTGAAGGC
201 CATGNCTCGG CTTCNNNTGG TCAAAGGGGA AGTGGAGCCT GAGGGAGATG
251 GGACTTNAGG GGGACGGNGC TGCGTGGGGA AAAAGCAGCC ACCNTTTGAC
301 AAGGGGGACA GGCATTTTTN CAAATGTGTG CTTNTTGGT
```

FIG.4

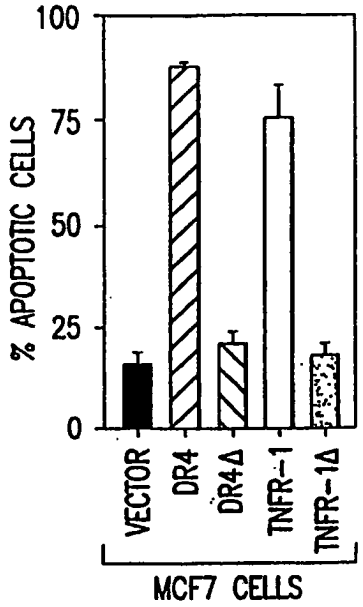

FIG.5A

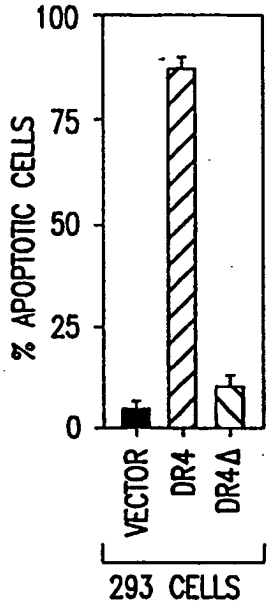

FIG.5B

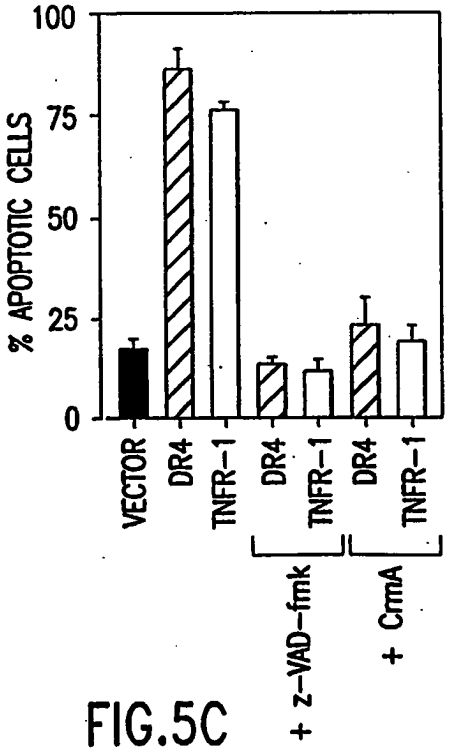

FIG.5C

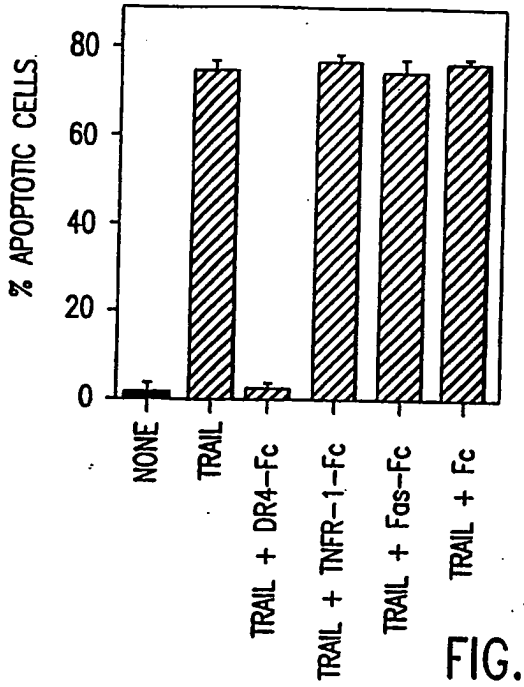
% APOPTOTIC CELLS
80
60
40
20
0
NONE
TRAIL
TRAIL + DR4-Fc
TRAIL + TNFR-1-Fc
TRAIL + Fas-Fc
TRAIL + Fc

FIG.6A

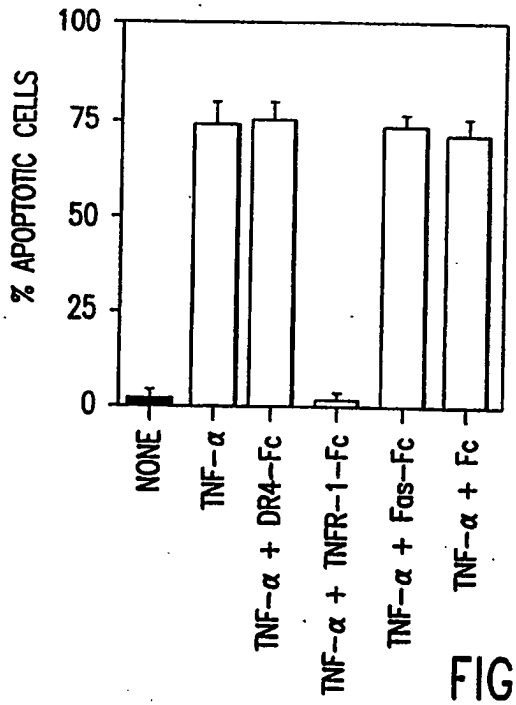
% APOPTOTIC CELLS
100
75
50
25
0
NONE
TNF-α
TNF-α + DR4-Fc
TNF-α + TNFR-1-Fc
TNF-α + Fas-Fc
TNF-α + Fc

FIG.6B

UNITED STATES PATENT AND TRADEMARK OFFICE

Commissioner for Patents
United States Patent and Trademark Office
Washington, D.C. 20231
www.uspto.gov

Paper No. 5

COPY MAILED

JAN 16 2001

OFFICE OF PETITIONS
A/C PATENTS

Attn: Douglas N. Larson Esq.
Oppenheimer Wolff & Donnelly LLP
38th Floor
2029 Century Park East
Los Angeles, CA 90067-3024

In re Application of
Weirather et al.
Application No. 09/565,972
Filed: May 5, 2000
Attorney Docket No. 310048-518

DECISION GRANTING PETITION

This is a decision on the petition filed August 7, 2000, to establish receipt of Figures 10 and 11 on May 5, 2000.

On May 5, 2000, the application was deposited.

On July 6, 2000, the Office of Initial Patent Examination mailed a Notice stating that Figures 10 and 11 were missing and that a petition must be filed if applicant wished for them to be considered part of the original application.

In response, the present petition was filed alleging that Figures 10 and 11 were deposited on May 5, 2000. In support, petitioner has submitted a postcard receipt which acknowledges receipt of 20 sheets of drawings consisting of Figures 1-28 on May 5, 2000. Petitioner has also submitted a copy of the missing documentation- Figures 10 and 11.

Evidence of receipt of any correspondence filed in the Patent and Trademark Office can be obtained by submitting a self addressed post card properly itemizing and identifying the paper or papers being filed. Upon receipt of the correspondence, the Patent and Trademark Office will check the listing on the post card against the papers submitted, making sure that all items listed are present and will then stamp the postcard with an Official date stamp and place the post card in the outgoing mail. "A post card receipt which itemizes and properly identifies the papers which are being filed serves as *prima facie* evidence of receipt in the PTO of all items listed thereon by the PTO." M.P.E.P. § 503.

Upon review of the record, Figures 10 and 11, deposited on May 5, 2000, have not been located. However, the evidence is convincing that the application papers deposited on May 5, 2000, included Figures 10 and 11, and that the figures weres subsequently misplaced in the PTO.

In view of the above, the petition is **granted**. The copy of Figures 10 and 11 submitted with the petition will be used for examination purposes.

No petition fee is required and none has been charged.

The Notice mailed July 6, 2000, was sent in error and is hereby vacated.

The Application is being returned to the Office of Initial Patent Examination for further processing with a filing date of May 5, 2000, using the application papers filed on May 5, 2000, and the copy of Figures 10 and 11 filed on August 7, 2000.

Telephone inquiries should be directed to Petitions Attorney Steven Brantley at (703) 306-5683.

Beverly M. Flanagan
Supervisory Petitions Examiner
Office of Petitions
Office of the Deputy Commissioner
for Patent Examination Policy

UNITED STATES PATENT AND TRADEMARK OFFICE

UNITED STATES DEPARTMENT OF COMMERCE
United States Patent and Trademark Office
Address: COMMISSIONER FOR PATENTS
P.O. Box 1450
Alexandria, Virginia 22313-1450
www.uspto.gov

Hershkovitz & Associates, LLC
2845 Duke Street
Alexandria, VA 22314

Mail Date: 04/22/2010

Applicant	: Jerome D. Johnson	: DECISION ON REQUEST FOR
Patent Number	: 7606739	: RECALCULATION of PATENT
Issue Date	: 10/20/2009	: TERM ADJUSTMENT IN VIEW
Appliction No	: 09/566,029	: OF WYETH
Filed	: 05/08/2000	:
		:

The Patentee's Request for Recalculation is **DISMISSED.**

This Request is deemed ineligible for consideration for one or more of the following reasons:

(A). The patent for which PTA recalculation is requested is either a design or reissue application or is a reexamination proceeding;

(B). The patent for which PTA recalculation is requested resulted from a utility or plant application filed under 35 USC 111(a) before May 29, 2000 and no CPA filed in the application on/after May 29, 2000;

(C). The patent for which PTA recalculation is requested resulted from an international application in which the international filing date was before May 29, 2000 and no CPA filed in the application on/after May 29, 2000;

(D). The patent for which PTA recalculation is requested issued on/after March 2, 2010;

(E). The Request for Recalculation was filed more than 180 days after the grant date of the patent and the request was not filed within two months of a dismissal of a request for reconsideration of the of the patent term under 37 CFR 1.705(d);

(F). The Request for Recalculation is not solely limited to USPTO pre-Wyeth interpretation of 35 U.S.C. 154(b)(2)(A);

or

(G). A civil action was filed pursuant to 35 U.S.C. 154(b)(4)(A)concerning the same patent at issue in this request.

Patentee may file a reply to this decision dismissing the Request for Recalculation. Patentee must file such reply within one month or thirty days, whichever is longer, of the mail date of the decision dismissing the Request for Recalculation. No fee is required if patentee is asserting in the reply that the dismissal for ineligibility is improper.

Patentee should use document code PET.OP if electronically filing a reply to this dismissal. If the USPTO finds that the request was improperly deemed ineligible, the USPTO will mail applicant a recalculation determination.

Patentee should be aware that in order to preserve the right to review in the United States District Court for the District of Columbia of the USPTO patent term adjustment determination, patentee must ensure that he or she also take the steps required under 35 U.S.C. 154(b)(4)(A). Nothing in the request for recalculation should be construed as providing an alternative time frame for commencing a civil action under 35 U.S.C. 154 (b)(4)(A).

Any questions concerning this decision should be directed to the Office of Patent Legal Administration at 571-272-7702.

UNITED STATES PATENT AND TRADEMARK OFFICE

AUG 14 2003

COMMISSIONER FOR PATENTS
UNITED STATES PATENT AND TRADEMARK OFFICE
P.O. BOX 1450
ALEXANDRIA, VA 22313-1450
www.uspto.gov

Martin & Ferraro, LLP
14500 Avion Parkway
Suite 300
Chantilly, VA 20151-1101

Paper No. 10

In re Application of Gary K. Michelson, M.D. Serial No. : 09/566,055 Filed : May 5, 2000 For : Screws of Cortical Bone and Method of Manufacture Thereof	: DECISION ON PETITION : TO WITHDRAW : HOLDING OF : ABANDONMENT

This is a decision on petitioner's request filed May 23, 2002 to review the holding of abandonment mailed May 16, 2002 for failure to respond to the Notice of Allowability and the Notice of Allowance and Issue Fee Due mailed October 29, 2001. The basis for the request is that applicant did not receive the communication mailed October 29, 2001. There is no fee required for this petition.

In order to overcome the presumption of delivery of an Office action, a practitioner must submit the following: (1) a statement from the practitioner stating that the Office action was not received by practitioner; (2) a statement attesting to the fact that a search of the file jacket and docket record indicates that the Office action was not received; and (3) a copy of the docket record where the non-received Office action would have been entered had it been received and docketed. See 1156 OG 53.

The request filed May 23, 2002 includes all the above elements. The request is therefore GRANTED. Upon the mailing of this decision, the application will be forwarded to the Legal Instruments Examiner for the remailing of the Notice of Allowability as well as the Notice of Allowance and Issue Fee Due.

Summary: Holding of Abandonment Withdrawn.

John E. Kittle, Director
Groups 3730 and 3760
Phone: (703) 308-0873

ak/8/6/03

UNITED STATES PATENT AND TRADEMARK OFFICE

COMMISSIONER FOR PATENTS
UNITED STATES PATENT AND TRADEMARK OFFICE
WASHINGTON, D.C. 20231
www.uspto.gov

Thomas C. Folsom
CHRISMAN BYNUM & JOHNSON, P.C.
1900 Fifteenth Street
Boulder, CO 80302

COPY MAILED

JUN 08 2001

OFFICE OF PETITIONS
A/C PATENTS

In re Application of
Raymond and Thornbloom
Application No. 09/566,063
Filed: May 5, 2000
For: METHOD OF BONDING A LENTICULAR LENS SHEET TO PLASTIC OBJECTS MADE FROM SAME

: DECISION REFUSING STATUS
: UNDER 37 CFR 1.47(a)

This is in response to the "Petition Under 37 CFR 1.47(a)," filed January 9, 2001, with a certificate of mailing dated January 5, 2001, and accompanied by a petition for a four month extension of time within the maximum extendable time for reply from the Notice to File Missing Parts mailed July 5, 2000.

The petition is dismissed.

Rule 47 applicant is given TWO MONTHS from the mailing date of this decision to reply, correcting the below-noted deficiencies. Any reply should be entitled "Request for Reconsideration of Petition Under 37 CFR 1.47(a)," and should only address the deficiencies noted below, except that the reply may include an oath or declaration executed by the non-signing inventor. **FAILURE TO RESPOND WILL RESULT IN ABANDONMENT OF THE APPLICATION.** Any extensions of time will be governed by 37 CFR 1.136(a).

The above-identified application was filed on May 5, 2000, without an executed oath or declaration and naming Mark A. Raymond and Bruce N. Thornbloom as joint inventors.

Accordingly, on July 5, 2000, a "Notice to File Missing Parts of Application" was mailed, requiring an executed oath or declaration and a filing fee, as well as an additional claim fee, and a surcharge for their late filing.

In response, on January 9, 2001 (certificate of mailing dated January 5, 2001), a Response to the Notice to file Missing Parts was filed which contained the following items:

1) Declaration for Patent Application with Power of Attorney executed by one of inventors and the late surcharge fee;
2) basic filing fee;
3) a copy of the Notice to file Missing Parts;
4) petition for four months extension of time and associated fee;
5) Petition under 1.47(a) and associated fee;
6) Affidavit from James R. Young; and
7) Declaration of Thomas C. Folsom in support of the 1.47 Petition.

A grantable petition under 37 CFR 1.47(a) requires: (1) proof that the non-signing inventor cannot be reached or refuses to sign the oath or declaration after having been presented with the application papers (specification, claims and drawings); (2) an acceptable oath or declaration in compliance with 35 U.S.C. §§ 115 and 116; (3) the petition fee; and (4) a statement of the last known address of the non-signing inventor. Applicant lacks item (1) set forth above.

As to item (1), it has been determined that adequate proof has not been provided by the Petitioner that the appropriate documentation was presented to Mr. Thornbloom. It is stated in paragraphs 6 and 7 of the Declaration by Mr. Folsom (the Petitioner) that a cover letter was prepared by the Petitioner (a copy of which has been provided as exhibit c) and instructions were given to a secretary to mail the cover letter along with "other things", a copy of an assignment supposedly executed by Mr. Thornbloom, a copy of the application, and a copy of a Combined Declaration and Power of attorney, and that such mailing should be via Federal Express. However, Petitioner has not submitted any documentary evidence of the mailing by Federal Express. Petitioner should show that a copy of the application papers was presented to the inventor, but that he did not respond to the request that he sign the oath/declaration in order to show that the inventor has refused to join in the application. The proof of the pertinent events should be made by a statement of someone with first hand knowledge of the events. Petitioner should submit a declaration by the secretary attesting to such mailing and accompanied by a Federal Express mail receipt with a tracking number. Furthermore, Petitioner may wish to submit additional documentary evidence from Federal Express (i.e. a copy of the delivery acceptance signature) that Mr. Thornbloom accepted delivery of the mailed package. A copy of the assignment supposedly

executed by Mr. Thornbloom should also be provided. The Petitioner does not appear to demonstrate that Mr. Thornbloom was presented with the appropriate documentation (specification, claims and drawings, and declaration/power of attorney). Unless Mr. Thornbloom was presented with a copy of the appropriate documentation, Mr. Thornbloom has not been given the chance to sign a declaration. Accordingly, Rule 47 applicant failed to show or provide proof that the inventor has refused to sign the declaration. See Manual of Patent Examining Procedure, Section 409.03(d).

Further correspondence with respect to this matter should be addressed as follows:

By mail: Assistant Commissioner for Patents
Box DAC
Washington, DC 20231

By FAX: (703) 308-6916
Attn: Office of Petitions

By hand: Office of Petitions
2201 South Clark Place
Crystal Plaza 4, Suite 3C23
Arlington, VA

Telephone inquiries related to this decision should be directed to Lesley Morris at (703) 306-0028.

For

Beverly M. Flanagan
Supervisory Petitions Examiner
Office of Petitions
Office of the Deputy Commissioner
for Patent Examination Policy

UNITED STATES PATENT AND TRADEMARK OFFICE

UNDER SECRETARY OF COMMERCE FOR INTELLECTUAL PROPERTY AND
DIRECTOR OF THE UNITED STATES PATENT AND TRADEMARK OFFICE
WASHINGTON, DC 20231
www.uspto.gov

DEC 16 2002

UR
PAPER NO. 17

In re Application of	:	
Mark A. Raymond et al.	:	
Serial Number: 09/566,063	:	
Filed: May 05, 2000	:	DECISION ON
For: PLASTIC OBJECTS INCLUDING LENTICULAR	:	PETITION UNDER
LENS SHEETS	:	M.P.E.P. 708.02,II

This is in response to the petition filed, June 28, 2002 requesting that the above-identified application be granted Special Status under Section 708.02, II of the MPEP and 37 CFR 1.102(d) (fee paid).

The petition has been considered and found to comply with the requirements set forth under the above-noted section. Accordingly the petition is GRANTED.

Richard V. Fisher

Richard V. Fisher, Director
Technology Center 1700
Chemical and Materials Engineering

Gray, Plant, Mooty, Mooty & Bennett, P.A.
P.O. BOX 2906
Minneapolis, MN 55402-0906

UNITED STATES PATENT AND TRADEMARK OFFICE

Commissioner for Patents
United States Patent and Trademark Office
Washington, D.C. 20231
www.uspto.gov

THOMAS C. FOLSOM
CHRISMAN BYNUM & JOHNSON, P.C.
1900 FIFTEENTH STREET
BOULDER, CO 80302

COPY MAILED

OCT 2 5 2001

OFFICE OF PETITIONS

In re Application of
Raymond and Thornbloom
Application No. 09/566,063
Filed: May 5, 2000
For: METHOD OF BONDING A LENTICULAR LENS SHEET TO PLASTIC OBJECTS MADE FROM SAME

: DECISION GRANTING PETITION
: UNDER 37 CFR 1.47(a)

This is in response to the "Request for Reconsideration of Petition Under 37 CFR 1.47(a)," filed October 15, 2001.

The petition is **granted**.

Petitioner has shown that the non-signing inventor has refused to join in the filing of the above-identified application.

The above-identified application and papers have been reviewed and found in compliance with 37 CFR 1.47(a). This application is hereby accorded Rule 1.47(a) status. As provided in Rule 1.47(c), this Office will forward notice of this application's filing to the non-signing inventor at the address given in the Declaration. Notice of the filing of this application will also be published in the Official Gazette.

The file is being forwarded to Technology Center 1700.

Telephone inquiries regarding this decision should be directed to Petitions Attorney Edward Tannouse at (703) 306-9200.

for

Beverly M. Flanagan
Supervisory Petitions Examiner
Office of Petitions
Office of the Deputy Commissioner
for Patent Examination Policy

UNITED STATES PATENT AND TRADEMARK OFFICE

Commissioner for Patents
United States Patent and Trademark Office
Washington, D.C. 20231
www.uspto.gov

BRUCE N. THORNBLOOM
4370 NORTH OVAL
DUBLIN, OH 43017

COPY MAILED

OCT 2 5 2001

OFFICE OF PETITIONS

In re Application of
Raymond and Thornbloom
Application No. 09/566,063
Filed: May 5, 2000
For: METHOD OF BONDING A LENTICULAR LENS SHEET TO PLASTIC OBJECTS MADE FROM SAME

Dear BRUCE N. THORNBLOOM:

You are named as a joint inventor in the above identified United States patent application, filed under the provisions of 35 U.S.C. 116 (United States Code), and 37 CFR 1.47(a), Rules of Practice in Patent Cases. Should a patent be granted on the application you will be designated therein as a joint inventor.

As a named inventor you are entitled to inspect any paper in the file wrapper of the application, order copies of all or any part thereof (at a prepaid cost per 37 CFR 1.19) or make your position of record in the application. Alternatively, you may arrange to do any of the preceding through a registered patent attorney or agent presenting written authorization from you. If you care to join the application, counsel of record (see below) would presumably assist you. Joining in the application would entail the filing of an appropriate oath or declaration by you pursuant to 37 CFR 1.63.

Telephone inquiries regarding this communication should be directed to Petitions Attorney Edward Tannouse at (703) 306-9200. Requests for information regarding your application should be directed to the File Information Unit at (703) 308-2733. Information regarding how to pay for and order a copy of the application, or a specific paper in the application, should be directed to Certification Division at (703) 308-9726 or 1(800) 972-6382 (outside the Washington D.C. area).

for

Beverly M. Flanagan
Supervisory Petitions Examiner
Office of Petitions
Office of the Deputy Commissioner
for Patent Examination Policy

THOMAS C. FOLSOM
CHRISMAN BYNUM & JOHNSON, P.C.
1900 FIFTEENTH STREET
BOULDER, CO 80302

UNITED STATES PATENT AND TRADEMARK OFFICE

Commissioner for Patents
United States Patent and Trademark Office
P.O. Box 1450
Alexandria, VA 22313-1450
www.uspto.gov

MERCHANT & GOULD PC
P O BOX 2903
MINNEAPOLIS, MN 55402-0903

COPY MAILED
APR 13 2006
OFFICE OF PETITIONS

In re Application of
Mark A. Raymond et al
Application No. 09/566,063
Filed: May 5, 2000
Attorney Docket No. 87007

DECISION GRANTING PETITION
UNDER 37 CFR 1.313(c)(2)

This is a decision on the petition, filed April 11, 2006, under 37 CFR 1.313(c)(2) to withdraw the above-identified application from issue after payment of the issue fee.

The petition is **GRANTED**.

The above-identified application is withdrawn from issue for consideration of a submission under 37 CFR 1.114 (request for continued examination). See 37 CFR 1.313(c)(2).

Petitioner is advised that the issue fee paid on October 24, 2005 in the above-identified application cannot be refunded. If, however, the above-identified application is again allowed, petitioner may request that it be applied towards the issue fee required by the new Notice of Allowance.[1]

Telephone inquiries should be directed to the undersigned at (571) 272-3218.

This matter is being referred to Technology Center AU 1772 for processing of the request for continued examination under 37 CFR 1.114.

Frances Hicks
Petitions Examiner
Office of Petitions

C:\Documents and Settings\FHicks\My Documents\470\313\566063

---

[1] *The request to apply the issue fee to the new Notice may be satisfied by completing and returning the new Part B – Fee(s) Transmittal Form (along with any balance due at the time of submission), which includes the following language thereon: "The Director of the USPTO is requested to apply the Issue Fee and Publication Fee (if any) or to re-apply any previously paid issue fee in the application identified above. Petitioner is advised that, whether a fee is indicated as being due or not, the Issue Fee Transmittal Form* ***must*** *be completed and timely submitted to avoid abandonment. Note the language in bold text on the first page of the Notice of Allowance and Fee(s) Due (PTOL-85).*

SPE: S. Najjar

SPE RESPONSE FOR CERTIFICATE OF CORRECTION

DATE : 6/12/07

Paper No.: _____

TO SPE OF : ART UNIT 2155

SUBJECT : Request for Certificate of Correction for Appl. No.: 09/566,088 Patent No.: 7058729

Please respond to this request for a certificate of correction within 7 days.

Please review the requested changes/corrections as shown in the **COCIN** document(s) in the IFW application image. No new matter should be introduced, nor should the scope or meaning of the claims be changed.

Please complete the response (see below) and forward the completed response to scanning using document code **COCX**.

Lamonte M. Newsome
Certificates of Correction Branch
703-308-9390 ext. 112

Thank You For Your Assistance

The request for issuing the above-identified correction(s) is hereby:

Note your decision on the appropriate box.

- ☒ **Approved** — All changes apply.
- ☐ **Approved in Part** — Specify below which changes **do not** apply.
- ☐ **Denied** — State the reasons for denial below.

Comments: _____

SPE

2155
Art Unit

UNITED STATES PATENT AND TRADEMARK OFFICE

COMMISSIONER FOR PATENTS
UNITED STATES PATENT AND TRADEMARK OFFICE
P.O. BOX 1450
ALEXANDRIA, VA 22313-1450
www.uspto.gov

MAIL

Paper No. 22

JAN 3 0 2004

DIRECTOR OFFICE
TECHNOLOGY CENTER 2600

MANATT,PHELPS & PHILIPS LLP
11355 WEST OLYMPIC BLVD.
LOS ANGELES CA 90064

In re Application of :
HASHIMOTO HIDEKI :
Application No. 09/5667,210 :
Filed: May 5, 2000 :
For: VEHICLE AND SYSTEM FOR CONTROLLING RETURN AND RETRIEVAL OF THE SAME :

DECISION ON REQUEST TO WITHDRAW FROM RECORD

This is a decision on the request to withdraw as attorney/agent of record filed on November 12, 2003.

A grantable request to withdraw as attorney/agent of record must:
(1) indicate the present mailing address of the attorney(s)/agent(s) who seek(s) to withdraw, and
(2) be signed by each attorney/agent seeking to withdraw or clearly be signed on their behalf, and
(3) be *approved* at least thirty (30) days prior to the maximum extendable period for response to any outstanding Office Action, and
(4) indicate the address to which future correspondence should be mailed.

Upon review, the requesting attorney is not of record for this application. Documentation has not been found which authorized power of attorney to the Requester. Consequently, the petition to withdraw all of the attorneys listed in the attachment to the petition and the request for change of correspondence address is **DENIED**.

A courtesy copy of this decision will be sent to the address listed below. However, all future correspondence will continue to be sent to the above listed address until such a time as applicant properly notifies the U.S. Patent and Trademark Office of a change of address.

The application will be returned to the examiner for action as appropriate.

Dwayne D. Bost
Special Program Examiner
Technology Center 2600
Communications
(703) 305-4778

cc: John C. Phillips
Fich & Richardson, P.C.
12390 El Camino Real
San Diego, CA 92130

UNITED STATES PATENT AND TRADEMARK OFFICE

Commissioner for Patents
United States Patent and Trademark Office
Washington, D.C. 20231
www.uspto.gov

Paper No. 3

COPY MAILED

JUN 0 8 2001

OFFICE OF PETITIONS
A/C PATENTS

JERRY JOHNSON
715 N. EWING STREET
HELENA, MT 59601

In re Application of John E. Larson Application No. 09/566,215 Filed: May 5, 2000 Title: USER HEIGHT ADJUSTABLE TABLES, SUPPORT STRUCTURES, AND CHAIRS	: : : : :	ON PETITION

This is a decision on the petition filed August 16, 2000, requesting that the above-identified application be accorded a filing date of May 5, 2000, with drawings of Figures 3-15 as a part of the original disclosure.

The petition is granted.

The application was filed on May 5, 2000. However, on July 5, 2000, the Office of Initial Patent Examination (OIPE) mailed a "Notice of Omitted Item(s)" requiring drawings of Figures 3-15 described in the specification.

In response, on August 16, 2000, the present petition and seventeen (17) pages of drawings containing Figures 3-15 were filed. Petitioner contends that Figures 3-15 on seventeen (17) sheets of drawings were deposited with the application papers on May 5, 2000. As evidence thereof, petitioners submitted a copy of their date-stamped postcard receipt which acknowledges receipt on May 5, 2000, of inter alia, fifty-one (51) pages of specification, claims and abstract, nineteen (19) sheets of drawings, and two (2) sheets of declaration.

The fifty-one (51) pages of specification, claims and abstract, two (2) sheets of declaration and nineteen (19) sheets of drawings containing Figures 1-15 (including the disputed Figures 3-15) filed May 5, 2000, have been located in the

application file. Therefore, the application was complete on filing.

The Notice mailed July 5, 2000, was mailed in error and is hereby vacated.

The $130.00 petition fee is not required and petitioner may request a refund of this fee by writing to the Office of Finance, Refund Section. A copy of this decision should accompany petitioner's request.

This application is being returned to OIPE for further processing with a filing date of May 5, 2000.

Telephone inquiries concerning this matter may be directed to Petitions Attorney Edward Tannouse at (703) 306-9200.

Beverly M. Flanagan
Supervisory Petitions Examiner
Office of Petitions
Office of the Deputy Commissioner
for Patent Examination Policy

UNITED STATES PATENT AND TRADEMARK OFFICE

Commissioner for Patents
United States Patent and Trademark Office
P.O. Box 1450
Alexandria, VA 22313-1450
www.uspto.gov

Associate Counsel (Patents) Code 3008.2
Naval Research Laboratory
Washington, DC 20375-5000

COPY MAILED

JUN 23 2004

OFFICE OF PETITIONS

In re Application of	:	ON PETITION
Carruthers, et al.	:	
Application No. 09/566,236	:	
Filed: May 5, 2000	:	
Attorney Docket No. 79,766	:	

This is a decision on the petition under 37 CFR 1.137(b), filed April 22, 2004, to revive the above-identified application.

The petition is **GRANTED**.

This application became abandoned for failure to timely reply to the final Office action mailed August 14, 2003. A one (1) month extension of time having been obtained pursuant to the provisions of 37 CFR 1.136(a), the date of abandonment of this application is December 15, 2003. A Notice of Abandonment was mailed on March 24, 2004.

The file is being forwarded to Technology Center 2800 for review of the Request for Continued Examination, submitted April 22, 2004.

Telephone inquiries concerning this matter may be directed to the undersigned at (703) 306-9200.

Edward J. Tannouse
Petitions Attorney
Office of Petitions
United States Patent and Trademark Office

UNITED STATES
PATENT AND
TRADEMARK OFFICE

UNDER SECRETARY OF COMMERCE FOR INTELLECTUAL PROPERTY
AND DIRECTOR OF THE UNITED STATES PATENT AND TRADEMARK OFFICE
PO BOX 1450, ALEXANDRIA, VA 22313-1450
WWW.USPTO.GOV

JUL - 3 2003

#20

PATREA L. PABST
HOLLAND & KNIGHT LLP
SUITE 2000, ONE ATLANTIC CENTER
1201 WEST PEACHTREE STREET, N.E.
ATLANTA GA 30309-3400

In re Application of Peter J. Sims et al Serial No.: 09/566,254 Filed: May 5, 2000 Attorney Docket No.: OMRF 135	: WITHDRAWAL OF ABANDONMENT

This is in response to the petition under 37 CFR 1.181, filed May 21, 2003, requesting withdrawal of the holding of abandonment of the above identified application.

A review of the file history shows that the examiner mailed a non-Final Office action to applicants on October 2, 2002, setting a three month shortened statutory period for reply. Upon failure to receive a reply the application was held abandoned by Notice of Abandonment mailed to applicants on May 15, 2003. Applicants present evidence of timely filing of a reply to the Office action on January 2, 2003 (Certificate of Mailing date), which was received by the Office on January 7, 2003, as evidenced by an Office date stamped postcard. The original reply has not been correlated with the file and the copy provided with the petition will be utilized. In view of the evidence presented, the Notice of Abandonment was mailed in error and is withdrawn and the application restored to pending status with the mailing of this decision.

Applicants' petition is **GRANTED**.

The abandoned application will be forwarded for entry of the amendment and then to the examiner for further consideration.

Should there be any questions with regard to this letter please contact William R. Dixon, Jr. by letter addressed to the Director, Technology Center 1600, PO BOX 1450, ALEXANDRIA, VA 22313-1450, or by telephone at (703) 308-3824 or by facsimile transmission at (703) 305-7230.

John Doll
Director, Technology Center 1600

UNITED STATES PATENT AND TRADEMARK OFFICE

Commissioner for Patents
United States Patent and Trademark Office
P.O. Box 1450
Alexandria, VA 22313-1450
www.uspto.gov

Albert P. Sharpe III, Esq
Fay, Sharpe, Fagan, Minnich & McKee, LLP
1100 Superior Avenue
Seventh Floor
Cleveland, OH 44114-2518

COPY MAILED

JUN 23 2005

OFFICE OF PETITIONS

In re Application of :
Lingappa K. Mestha et al. :
Application No. 09/566,291 : ON PETITION
Filing Date: May 5, 2000 :
Attorney Docket No. XER 2 0315 D/A0102 :

This is a decision on the petition under 37 CFR 1.137(b), filed by facsimile transmission on March 9, 2005, to revive the above-identified application.

In response to the final Office action mailed August 17, 2004, petitioner herewith submits $1,500 for the petition to revive fee, an amendment, and the unintentional statement as required by 37 CFR 1.137(b).

37 CFR 1.137(b)(3) requires a statement that the entire delay in filing the required reply from the due date for the reply until the filing of a grantable petition pursuant to 37 CFR 1.137(b) was unintentional. Since the statement contained in the instant petition varies from the language required by 37 CFR 1.137(b)(3), the statement is being construed as the statement required by 37 CFR 1.137(b)(3) and petitioner must notify the Office if this is **not** a correct interpretation of the statement.

As authorized in the instant petition, the fee of $1,500 has been charged to petitioner's deposit account.

Since the requirements under 37 CFR 1.137(b) have been met, the petition is **granted**.

The application file is being referred to Technology Center Art Unit 2624, for processing the Request for Continued Examination under 37 CFR 1.114, filed February 17, 2005, and for further review of the amendment filed with the instant petition.

Any questions concerning this decision may be directed to the undersigned at (571) 272-3226.

Andrea Smith
Petitions Examiner
Office of Petitions
Office of the Deputy Commissioner
for Patent Examination Policy

UNITED STATES PATENT AND TRADEMARK OFFICE

Commissioner for Patents
United States Patent and Trademark Office
P.O. Box 1450
Alexandria, VA 22313-1450
www.uspto.gov

Paper No. 20

BRIAN M. BERLINER ESQ.
O'MELVENY & MYERS, LLP
400 SOUTH HOPE STREET
LOS ANGELES, CA 90071-2899

COPY MAILED

JUL 13 2004

OFFICE OF PETITIONS

In re Application of	:	
Palatov et al.	:	
Application No. 09/566,436	:	ON PETITION
Filed: May 8, 2000	:	
Attorney Docket No. 411874-7	:	

This is a decision on the petition under 37 C.F.R. § 1.137(b), filed June 30, 2004, to revive the above-identified application.

The petition is **GRANTED.**

This application became abandoned for failure to timely reply within three months to the final Office action mailed March 12, 2003. No extensions of time under the provisions of 37 CFR 1.136(a) were timely obtained. Accordingly, this application became abandoned on June 13, 2003. A Notice of Abandonment was mailed on December 2, 2003.

Petitioner has met the requirements to revive the above-identified application pursuant to 37 CFR 1.137(b).

An extension of time under 37 CFR 1.136 must be filed prior to the expiration of the maximum extendable period for reply. See In re Application of S., 8 USPQ2d 1630, 1631 (Comm'r Pats. 1988). Accordingly, since the $475.00 extension of time fee submitted with the petition on June 30, 2004 was subsequent to the maximum extendable period for reply, this fee is unnecessary and will be credited to petitioner's deposit account as authorized.

The file is now being forwarded to Technology Center 2600 for processing of the Request for Continued Examination under 37 CFR 1.114 filed with the instant petition.

Telephone inquiries should be directed to the undersigned at (703) 306-0482.

Liana Chase

Liana Chase
Petitions Examiner
Office of Petitions
Office of the Deputy Commissioner
for Patent Examination Policy

UNITED STATES PATENT AND TRADEMARK OFFICE

Commissioner for Patents
United States Patent and Trademark Office
Washington, D.C. 20231
www.uspto.gov

Paper No. 6
COPY MAILED

NOV 0 8 2000

OFFICE OF PETITIONS
A/C PATENTS

ALTERA LAW GROUP
10749 BREN ROAD EAST
MINNEAPOLIS , MN 55343

In re Application of:
RANTAKARI, ERKKI, *et al.*
Application No. 09/566,438
Filed:
Attorney Docket No. 796.348USW1

DECISION ON PETITION

This is a decision on the petition under 37 C.F.R. §1.10(e), filed on August 14, 2000, requesting that the above-identified application be accorded a filing date of May 8, 2000.

THE RULE

37 C.F.R. § 1.10 Filing of correspondence by "Express Mail."

(a)...

(b)...

(c)...

(d)...

(e) Any person mailing correspondence addressed as set out in § 1.1(a) to the Office with sufficient postage utilizing the "Express Mail Post Office to Addressee" service of the USPS but not received by the Office, may petition the Commissioner to consider such correspondence filed in the Office on the USPS deposit date, provided that:

(1) The petition is filed promptly after the person becomes aware that the Office has no evidence of receipt of the correspondence;

(2) The number of the "Express Mail" mailing label was placed on the paper(s) or fee(s) that constitute the correspondence prior to the original mailing by "Express Mail";

(3) The petition includes a copy of the originally deposited paper(s) or fee(s) that constitute the correspondence showing the number of the "Express Mail" mailing label thereon, a copy of any returned postcard receipt, a copy of the "Express Mail" mailing label showing the "date-in," a copy of any other official notation by the USPS relied upon to show the date of deposit, and, if the requested filing date is a date other than the "date-in" on the "Express Mail" mailing label or other official notation entered by the USPS, a showing pursuant to paragraph (d)(3) of this section that the requested filing date was the date the correspondence was deposited in the "Express Mail Post Office to Addressee" service prior to the last scheduled pickup for that day; and

(4) The petition includes a statement which establishes, to the satisfaction of the Commissioner, the original deposit of the correspondence and

that the copies of the correspondence, the copy of the "Express Mail" mailing label, the copy of any returned postcard receipt, and any official notation entered by the USPS are true copies of the originally mailed correspondence, original "Express Mail" mailing label, returned postcard receipt, and official notation entered by the USPS.

ANALYSIS

A petition under 37 C.F.R. §1.10(e) must include a statement establishing the date of the original deposit of the correspondence.[1] This petition includes what could be construed as a statement regarding the facts of this application, but is not clear that Petitioner has first hand knowledge of the facts surrounding the deposit of this application with the USPS. This "statement" only states that "[o]n May 8, 2000, Applicant's attorney of record filed the above reference [sic] application under 37 C.F.R. §1.10."[2] This is merely conclusory; there is no statement establishing the facts surrounding the date of deposit of this application with the USPS.

In view of the above, this petition is *dismissed.*

Any request for reconsideration of this decision must be submitted within TWO (2) MONTHS from the mail date of this decision. Extensions of time under 37 C.F.R. §1.136(a) are permitted. *37 C.F.R. §1.137(d).* The reconsideration request should include a cover letter entitled "Renewed Petition under 37 C.F.R. §1.137(b)".

Further correspondence with respect to this matter should be addressed as follows:

By mail: Assistant Commissioner for Patents
Box DAC
Washington, D.C. 20231

By FAX: (703) 308-6916
Attn: Office of Petitions

By hand: Office of Petitions
Four Crystal Plaza, Suite 3C23
2201 South Clark Place
Arlington, VA 22202

[1] 37 C.F.R. §1.10(e)(4).

[2] *See*, Petition for Reinstatement of Filing Date due to Pate Office Error Under 37 C.F.R. §1.10(e), page 2, first paragraph. (Paper No. 3).

Telephone inquiries concerning this matter may be directed to Petitions Attorney Scott M. Ledford in the Office of Petitions at (703) 306-5593.

Beverly Flanagan
Supervisory Petitions Examiner
Office of Petitions
Office of the Deputy Assistant Commissioner
for Patent Examination Policy

UNITED STATES PATENT AND TRADEMARK OFFICE

Commissioner for Patents
United States Patent and Trademark Office
Washington, D.C. 20231
www.uspto.gov

COPY MAILED

Paper No. 8

MAY 08 2001

OFFICE OF PETITIONS
A/C PATENTS

ALTERA LAW GROUP
10749 BREN ROAD EAST
MINNEAPOLIS , MN 55343

In re Application of
RANTAKARI, ERKKI, *et al.*
Application No. 09/566,438
Filed: 05/08/2000
Attorney Docket No. 796.348USW1

DECISION GRANTING PETITION

This is a decision on the renewed petition filed on January 12, 2001, requesting that the above-identified application be accorded a filing date of May 8, 2000.

The United States Patent and Trademark Office (hereinafter "USPTO") received this application on May 8, 2000. However, on August 3, 2000, the Office of Initial Patent Examination (hereinafter "OIPE") mailed a "Notice Of Incomplete Nonprovisional Application" (hereinafter "notice") noting that the application had not been granted a filing date due to Applicant's failure to include a specification and at least one drawing in this application. The notice further stated that the filing date would be the date of receipt of the omitted specification unless a petition was filed that successfully showed that the missing item(s) had been included with the application. Also, the notice advised Applicant that the statutory basic filing fee was missing, and that said fee should be paid within two months of the filing date accorded the application. On August 14, 2000, Petitioner filed a petition to receive a filing date of May 8, 2000. In a decision mailed November 8, 2000, that petition was dismissed. Petitioner responded with the January 12, 2001 filing of this petition.[1]

A further review of the file has resulted in the location of the missing specification and drawings. Accordingly, *this petition is* ***granted***.

The August 3, 2000 notice is hereby withdrawn.

The $130.00 petition fee will not be charged.

The application is being returned to OPIE for further processing with a filing date of May 8, 2000, using the specification and drawings filed on May 8, 2000 and the declaration filed on August 14, 2000.

Any questions regarding this decision should be directed to Petitions Attorney Scott M. Ledford at (703) 306-5593.

Beverly M. Flanagan

Beverly Flanagan
Supervisory Petitions Examiner
Office of Petitions
Office of the Deputy Assistant Commissioner
for Patent Policy and Projects

---

[1] The filing was timely under 37 C.F.R. §1.8 practice.

PTO/SB/66 (03-09)
Approved for use through 03/31/2012. OMB 0651-0016
U.S. Patent and Trademark Office: U.S. DEPARTMENT OF COMMERCE
Under the Paperwork Reduction Act of 1995, no persons are required to respond to a collection of information unless it displays valid OMB control number.

PETITION TO ACCEPT UNINTENTIONALLY DELAYED PAYMENT OF MAINTENANCE FEE IN AN EXPIRED PATENT (37 CFR 1.378(c))

Patent Number	Issue Date (YYYY-MM-DD)	Application Number	Filing Date (YYYY-MM-DD)	Docket Number (if applicable)
6773554	2004-08-10	09566469	2000-05-08	

CAUTION: Maintenance fee (and surcharge, if any) payment must correctly identify: (1) the patent number and (2) the application number of the actual U.S. application leading to issuance of that patent to ensure the fee(s) is/are associated with the correct patent. 37 CFR 1.366(c) and (d).

SMALL ENTITY
☒ Patentee claims, or has previously claimed, small entity status. See 37 CFR 1.27.

LOSS OF ENTITLEMENT TO SMALL ENTITY STATUS
☐ Patentee is no longer entitled to small entity status. See 37 CFR 1.27(g)

NOT Small Entity		Small Entity	
Fee	Code	Fee	Code
○ 3 ½ year	(1551)	◉ 3 ½ year	(2551)
○ 7 ½ year	(1552)	○ 7 ½ year	(2552)
○ 11 ½ year	(1553)	○ 11 ½ year	(2553)

SURCHARGE
The surcharge required by 37 CFR 1.20(i)(2) (Fee Code 1558) must be paid as a condition of accepting unintentionally delayed payment of the maintenance fee.

MAINTENANCE FEE (37 CFR 1.20(e)-(g))
The appropriate maintenance fee must be submitted with this petition.

STATEMENT
THE UNDERSIGNED CERTIFIES THAT THE DELAY IN PAYMENT OF THE MAINTENANCE FEE TO THIS PATENT WAS UNINTENTIONAL

PETITIONER(S) REQUEST THAT THE DELAYED PAYMENT OF THE MAINTENANCE FEE BE ACCEPTED AND THE PATENT REINSTATED

THIS PORTION MUST BE COMPLETED BY THE SIGNATORY OR SIGNATORIES

37 CFR 1.378(d) states: "Any petition under this section must be signed by an attorney or agent registered to practice before the Patent and Trademark Office, or by the patentee, the assignee, or other party in interest."

I certify, in accordance with 37 CFR 1.4(d)(4) that I am

○ An attorney or agent registered to practice before the Patent and Trademark Office

◉ A sole patentee

○ A joint patentee; I certify that I am authorized to sign this submission on behalf of all the other patentees.

○ A joint patentee; all of whom are signing this e-petition

○ The assignee of record of the entire interest

Sole Patentee			
A signature of the applicant or representative is required in accordance with 37 CFR 1.33 and 10.18. Please see 37 CFR 1.4(d) for the form of the signature.			
Signature	/John W Moore Jr/	Date (YYYY-MM-DD)	2010-02-15
Name	John W. Moore, Jr.		

This collection of information is required by 37 CFR 1.378(c). The information is required to obtain or retain a benefit by the public which is to file (and by the USPTO to process) an application. Confidentiality is governed by 35 U.S.C. 122 and 37 CFR 1.11 and 1.14. This collection is estimated to take 1 hour to complete, including gathering, preparing, and submitting the completed application form to the USPTO. Time will vary depending upon the individual case. Any comments on the amount of time you require to complete this form and/or suggestions for reducing this burden, should be sent to the Chief Information Officer, U.S. Patent and Trademark Office, U.S. Department of Commerce, P.O. Box 1450, Alexandria, VA 22313-1450. DO NOT SEND FEES OR COMPLETED FORMS TO THIS ADDRESS. **This form can only be used when in conjunction with EFS-Web. If this form is mailed to the USPTO, it may cause delays in reinstating the patent.**

Privacy Act Statement

The Privacy Act of 1974 (P.L. 93-579) requires that you be given certain information in connection with your submission of the attached form related to a patent application or patent. Accordingly, pursuant to the requirements of the Act, please be advised that: (1) the general authority for the collection of this information is 35 U.S.C. 2(b)(2); (2) furnishing of the information solicited is voluntary; and (3) the principal purpose for which the information is used by the U.S. Patent and Trademark Office is to process and/or examine your submission related to a patent application or patent. If you do not furnish the requested information, the U.S. Patent and Trademark Office may not be able to process and/or examine your submission, which may result in termination of proceedings or abandonment of the application or expiration of the patent.

The information provided by you in this form will be subject to the following routine uses:

1. The information on this form will be treated confidentially to the extent allowed under the Freedom of Information Act (5 U.S.C. 552) and the Privacy Act (5 U.S.C. 552a). Records from this system of records may be disclosed to the Department of Justice to determine whether the Freedom of Information Act requires disclosure of these records.

2. A record from this system of records may be disclosed, as a routine use, in the course of presenting evidence to a court, magistrate, or administrative tribunal, including disclosures to opposing counsel in the course of settlement negotiations.

3. A record in this system of records may be disclosed, as a routine use, to a Member of Congress submitting a request involving an individual, to whom the record pertains, when the individual has requested assistance from the Member with respect to the subject matter of the record.

4. A record in this system of records may be disclosed, as a routine use, to a contractor of the Agency having need for the information in order to perform a contract. Recipients of information shall be required to comply with the requirements of the Privacy Act of 1974, as amended, pursuant to 5 U.S.C. 552a(m).

5. A record related to an International Application filed under the Patent Cooperation Treaty in this system of records may be disclosed, as a routine use, to the International Bureau of the World Intellectual Property Organization, pursuant to the Patent Cooperation Treaty.

6. A record in this system of records may be disclosed, as a routine use, to another federal agency for purposes of National Security review (35 U.S.C. 181) and for review pursuant to the Atomic Energy Act (42 U.S.C. 218(c)).

7. A record from this system of records may be disclosed, as a routine use, to the Administrator, General Services, or his/her designee, during an inspection of records conducted by GSA as part of that agency's responsibility to recommend improvements in records management practices and programs, under authority of 44 U.S.C. 2904 and 2906. Such disclosure shall be made in accordance with the GSA regulations governing inspection of records for this purpose, and any other relevant (i.e., GSA or Commerce) directive. Such disclosure shall not be used to make determinations about individuals.

8. A record from this system of records may be disclosed, as a routine use, to the public after either publication of the application pursuant to 35 U.S.C. 122(b) or issuance of a patent pursuant to 35 U.S.C. 151. Further, a record may be disclosed, subject to the limitations of 37 CFR 1.14, as a routine use, to the public if the record was filed in an application which became abandoned or in which the proceedings were terminated and which application is referenced by either a published application, an application open to public inspections or an issued patent.

9. A record from this system of records may be disclosed, as a routine use, to a Federal, State, or local law enforcement agency, if the USPTO becomes aware of a violation or potential violation of law or regulation.

UNITED STATES PATENT AND TRADEMARK OFFICE

Commissioner for Patents
United States Patent and Trademark Office
P.O. Box 1450
Alexandria, VA 22313-1450
www.uspto.gov

In re Patent No. 6773554
Issue Date: August 10,2004
Application No. 09566469
Filed: May 8,2000
Attorney Docket No. M-712.03P

:
:DECISION GRANTING PETITION
:UNDER 37 CFR 1.378(c)
:

This is a decision on the electronic petition, filed February 16,2010 ,under 37 CFR 1.378(c) to accept the unintentionally delayed payment of the 3.5 year maintenance fee for the above-identified patent.

The petition is **GRANTED**.

The maintenance fee is accepted, and the above-identified patent reinstated as of February 16,2010 .
This decision also constitutes notice that the fee has been accepted. An electronic copy of the petition and this decision has been created as an entry in the Image File Wrapper. Nevertheless, petitioner should print and retain an independent copy.

Telephone inquiries related to this electronic decision should be directed to the Electronic Business Center at 1-866-217-9197.

UNITED STATES PATENT AND TRADEMARK OFFICE

Commissioner for Patents
United States Patent and Trademark Office
PO Box 1450
Arlington, VA 22313
www.uspto.gov

Paper No. 14

Andre L. Marais
Blakely Sokoloff Taylor & Zafman
12400 Wilshire Blvd.
Los Angeles, CA 90025-1030

COPY MAILED
OCT 02 2003
OFFICE OF PETITIONS

In re Application of	:	
Alan Seefeldt et al.	:	
Application No. 09/566,586	:	ON PETITION
Filed: May 8, 2000	:	
Attorney Docket No. 17002-186-1US	:	

This is a decision on the petition under 37 CFR 1.137(b), filed September 15, 2003, to revive the above-identified application.

The petition is Granted.

The above-identified application became abandoned for failure to submit the issue fee in a timely manner in reply to the Notice of Allowance mailed April 8, 2003, which set a shortened statutory period for reply of three months. Accordingly, the application became abandoned on July 9, 2003.

Telephone inquiries concerning this decision should be directed to Latrice Bond at (703) 308-6911.

Latrice Bond

Latrice Bond
Paralegal Specialist
Office of Petitions
Office of the Deputy Commissioner
for Patent Examination Policy

Notice of Allowability	Application No.	Applicant(s)	
	09/566,586	SEEFELDT ET AL.	
	Examiner	Art Unit	
	Almis R Jankus	2671	

-- The MAILING DATE of this communication appears on the cover sheet with the correspondence address--

All claims being allowable, PROSECUTION ON THE MERITS IS (OR REMAINS) CLOSED in this application. If not included herewith (or previously mailed), a Notice of Allowance (PTOL-85) or other appropriate communication will be mailed in due course. **THIS NOTICE OF ALLOWABILITY IS NOT A GRANT OF PATENT RIGHTS.** This application is subject to withdrawal from issue at the initiative of the Office or upon petition by the applicant. See 37 CFR 1.313 and MPEP 1308.

1. ☒ This communication is responsive to *terminal disclaimer of 3/11/03*.
2. ☒ The allowed claim(s) is/are *1-9*.
3. ☒ The drawings filed on *08 May 2000* are accepted by the Examiner.
4. ☐ Acknowledgment is made of a claim for foreign priority under 35 U.S.C. § 119(a)-(d) or (f).
   a) ☐ All b) ☐ Some* c) ☐ None of the:
      1. ☐ Certified copies of the priority documents have been received.
      2. ☐ Certified copies of the priority documents have been received in Application No. _____ .
      3. ☐ Copies of the certified copies of the priority documents have been received in this national stage application from the International Bureau (PCT Rule 17.2(a)).

   * Certified copies not received: _____.
5. ☐ Acknowledgment is made of a claim for domestic priority under 35 U.S.C. § 119(e) (to a provisional application).
   (a) ☐ The translation of the foreign language provisional application has been received.
6. ☒ Acknowledgment is made of a claim for domestic priority under 35 U.S.C. §§ 120 and/or 121.

Applicant has THREE MONTHS FROM THE "MAILING DATE" of this communication to file a reply complying with the requirements noted below. Failure to timely comply will result in ABANDONMENT of this application. **THIS THREE-MONTH PERIOD IS NOT EXTENDABLE**

7. ☐ A SUBSTITUTE OATH OR DECLARATION must be submitted. Note the attached EXAMINER'S AMENDMENT or NOTICE OF INFORMAL PATENT APPLICATION (PTO-152) which gives reason(s) why the oath or declaration is deficient.

8. ☐ CORRECTED DRAWINGS must be submitted.
   (a) ☐ including changes required by the Notice of Draftsperson's Patent Drawing Review (PTO-948) attached
      1) ☐ hereto or 2) ☐ to Paper No. ____.
   (b) ☐ including changes required by the proposed drawing correction filed _____, which has been approved by the Examiner.
   (c) ☐ including changes required by the attached Examiner's Amendment / Comment or in the Office action of Paper No. _____.

Identifying indicia such as the application number (see 37 CFR 1.84(c)) should be written on the drawings in the top margin (not the back) of each sheet. The drawings should be filed as a separate paper with a transmittal letter addressed to the Official Draftsperson.

9. ☐ DEPOSIT OF and/or INFORMATION about the deposit of BIOLOGICAL MATERIAL must be submitted. Note the attached Examiner's comment regarding REQUIREMENT FOR THE DEPOSIT OF BIOLOGICAL MATERIAL.

Attachment(s)

1☐ Notice of References Cited (PTO-892)
2☐ Notice of Informal Patent Application (PTO-152)
3☐ Notice of Draftperson's Patent Drawing Review (PTO-948)
4☐ Interview Summary (PTO-413), Paper No.____ .
5☐ Information Disclosure Statements (PTO-1449), Paper No. ____.
6☐ Examiner's Amendment/Comment
7☐ Examiner's Comment Regarding Requirement for Deposit of Biological Material
8☐ Examiner's Statement of Reasons for Allowance
9☐ Other .

ALMIS R. JANKUS
PRIMARY EXAMINER

UNITED STATES PATENT AND TRADEMARK OFFICE

Commissioner for Patents
United States Patent and Trademark Office
P.O. Box 1450
Alexandria, VA 22313-1450
www.uspto.gov

OIPE
JAN 2 4 2005
PATENT & TRADEMARK OFFICE

Paper No. ____

ERIC ROBINSON
PMB 955
21010 SOUTHBANK STREET
POTOMAC FALLS, VA 20165

RECEIVED
AUG 1 6 2004
PM 8/16/04

COPY MAILED

AUG 1 2 2004

OFFICE OF PETITIONS

In re Application of
Shunpei Yamazaki
Application No. 09/566,733
Filed: May 9, 2000
Attorney Docket No. 0756-2155

DECISION GRANTING PETITION
UNDER 37 CFR 1.313(c)(2)

This is a decision on the petition, filed August 11, 2004, under 37 CFR 1.313(c)(2) to withdraw the above-identified application from issue after payment of the issue fee.

The petition is **GRANTED**.

The above-identified application is withdrawn from issue for consideration of a submission under 37 CFR 1.114 (request for continued examination). See 37 CFR 1.313(c)(2).

Petitioner is advised that the issue fee paid on January 23, 2004 in the above-identified application cannot be refunded. If, however, the above-identified application is again allowed, petitioner may request that it be applied towards the issue fee required by the new Notice of Allowance.[1]

Telephone inquiries should be directed to the undersigned at (703) 305-8680.

Upon receipt of the file in the Office of Petitions and association of the petition, RCE, IDS and decision on petition with the file, the file will be forwarded to Technology Center AU 2823 for processing of the request for continued examination under 37 CFR 1.114 and for consideration of the concurrently filed Information Disclosure Statement.

Frances Hicks
Petitions Examiner
Office of Petitions
Office of the Deputy Commissioner
for Patent Examination Policy

---

[1] The request to apply the issue fee to the new Notice may be satisfied by completing and returning the new Issue Fee Transmittal Form PTOL-85(b), which includes the following language thereon: "Commissioner for Patents is requested to apply the Issue Fee and Publication Fee (if any) or re-apply any previously paid issue fee to the application identified above." Petitioner is advised that, whether a fee is indicated as being due or not, the Issue Fee Transmittal Form **must** be completed and timely submitted to avoid abandonment. Note the language in bold text on the first page of the Notice of Allowance and Fee(s) Due (PTOL-85).

UNITED STATES PATENT AND TRADEMARK OFFICE

Commissioner for Patents
United States Patent and Trademark Office
P.O. Box 1450
Alexandria, VA 22313-1450
www.uspto.gov

ERIC ROBINSON
PMB 955
21010 SOUTHBANK ST.
POTOMAC FALLS VA 20165

COPY MAILED

JAN 2 5 2008

OFFICE OF PETITIONS

In re Application of	:	
Shunpei Yamazaki et al	:	
Application No. 09/566,742	:	DECISION GRANTING PETITION
Filed: May 9, 2000	:	UNDER 37 CFR 1.313(c)(2)
Attorney Docket No. 0756-2159	:	

This is a decision on the petition under 37 CFR 1.313(c)(2), filed January 24, 2008, to withdraw the above-identified application from issue after payment of the issue fee.

The petition is **GRANTED**.

The above-identified application is withdrawn from issue for consideration of a submission under 37 CFR 1.114 (request for continued examination). *See* 37 CFR 1.313(c)(2).

Petitioner is advised that the issue fee paid on December 17, 2007 cannot be refunded. If, however, this application is again allowed, petitioner may request that it be applied towards the issue fee required by the new Notice of Allowance.[1]

Telephone inquiries should be directed to the undersigned at (571) 272-3208.

This application is being referred to Technology Center AU 2871 for processing of the request for continued examination under 37 CFR 1.114 and for consideration of the concurrently filed IDS.

Karen Creasy

Karen Creasy
Petitions Examiner
Office of Petitions

---

[1] *The request to apply the issue fee to the new Notice may be satisfied by completing and returning the new Part B – Fee(s) Transmittal Form (along with any balance due at the time of submission). Petitioner is advised that the Issue Fee Transmittal Form must be completed and timely submitted to avoid abandonment of the application.*

UNITED STATES PATENT AND TRADEMARK OFFICE

Commissioner for Patents
United States Patent and Trademark Office
P.O. Box 1450
Alexandria, VA 22313-1450
www.uspto.gov

ERIC ROBINSON
PMB 955
21010 SOUTHBANK ST.
POTOMAC FALLS, VA 20165.

COPY MAILED

AUG 1 5 2008

OFFICE OF PETITIONS

In re Application of
Shunpei Yamazaki et al
Application No. 09/566,742
Filed: May 9, 2000
Attorney Docket No. 0756-2159

ON PETITION

This is a decision on the petition, filed August 14, 2008 under 37 CFR 1.313(c)(2) to withdraw the above-identified application from issue after payment of the issue fee.

The petition is **GRANTED**.

The above-identified application is withdrawn from issue for consideration of a submission under 37 CFR 1.114 (request for continued examination). See 37 CFR 1.313(c)(2).

Petitioner is advised that the issue fee paid on May 28, 2008 in the above-identified application cannot be refunded. If, however, the above-identified application is again allowed, petitioner may request that it be applied towards the issue fee required by the new Notice of Allowance.[1]

Telephone inquiries should be directed to Irvin Dingle at (571) 272-3210.

This matter is being referred to Technology Center AU 2871 for processing of the request for continued examination under 37 CFR 1.114 and for consideration of the concurrently filed Information Disclosure Statement.

Irvin Dingle
Petitions Examiner
Office of Petitions

[1] The request to apply the issue fee to the new Notice may be satisfied by completing and returning the new Issue Fee Transmittal Form PTOL-85(b), which includes the following language thereon: Commissioner for Patents is requested to apply the Issue Fee and Publication Fee (if any) or re-apply any previously paid issue fee to the application identified above. Petitioner is advised that, whether a fee is indicated as being due or not, the Issue Fee Transmittal Form **must** be completed and timely submitted to avoid abandonment. Note the language in bold text on the first page of the Notice of Allowance and Fee(s) Due (PTOL-85).

Under the Paperwork Reduction Act of 1995, no persons are required to respond to a collection of information unless it displays valid OMB control number.

PETITION TO ACCEPT UNINTENTIONALLY DELAYED PAYMENT OF MAINTENANCE FEE IN AN EXPIRED PATENT (37 CFR 1.378(c))

Patent Number	Issue Date (YYYY-MM-DD)	Application Number	Filing Date (YYYY-MM-DD)	Docket Number (if applicable)
6,741,566	2004-05-25	09/566,851	2000-05-08	

CAUTION: Maintenance fee (and surcharge, if any) payment must correctly identify: (1) the patent number and (2) the application number of the actual U.S. application leading to issuance of that patent to ensure the fee(s) is/are associated with the correct patent. 37 CFR 1.366(c) and (d).

SMALL ENTITY
☒ Patentee claims, or has previously claimed, small entity status. See 37 CFR 1.27.

LOSS OF ENTITLEMENT TO SMALL ENTITY STATUS
☐ Patentee is no longer entitled to small entity status. See 37 CFR 1.27(g)

NOT Small Entity		Small Entity	
Fee	Code	Fee	Code
○ 3 ½ year	(1551)	◉ 3 ½ year	(2551)
○ 7 ½ year	(1552)	○ 7 ½ year	(2552)
○ 11 ½ year	(1553)	○ 11 ½ year	(2553)

SURCHARGE
The surcharge required by 37 CFR 1.20(i)(2) (Fee Code 1558) must be paid as a condition of accepting unintentionally delayed payment of the maintenance fee.

MAINTENANCE FEE (37 CFR 1.20(e)-(g))
The appropriate maintenance fee must be submitted with this petition.

STATEMENT
THE UNDERSIGNED CERTIFIES THAT THE DELAY IN PAYMENT OF THE MAINTENANCE FEE TO THIS PATENT WAS UNINTENTIONAL

PETITIONER(S) REQUEST THAT THE DELAYED PAYMENT OF THE MAINTENANCE FEE BE ACCEPTED AND THE PATENT REINSTATED

THIS PORTION MUST BE COMPLETED BY THE SIGNATORY OR SIGNATORIES

37 CFR 1.378(d) states: "Any petition under this section must be signed by an attorney or agent registered to practice before the Patent and Trademark Office, or by the patentee, the assignee, or other party in interest."

I certify, in accordance with 37 CFR 1.4(d)(4) that I am

○ An attorney or agent registered to practice before the Patent and Trademark Office

○ A sole patentee

○ A joint patentee; I certify that I am authorized to sign this submission on behalf of all the other patentees.

○ A joint patentee; all of whom are signing this e-petition

◉ The assignee of record of the entire interest

The Assignee of record of the entire interest			
Under 37 CFR 3.71 an assignee becomes of record by filing a statement in compliance with 37 CFR 3.73(b). Signature requirements are set forth in 37 CFR 1.4(d), and the undersigned certifies that he / she is empowered to act on behalf of the assignee of the entire interest			
Signature	/Benzion A. Wachsman/	Date (YYYY-MM-DD)	2009-03-04
Name	Benzion A. Wachsman		
Enter Reel and Frame Number		Remove	
Reel Number	010803	Frame Number	0158
Enter Reel and Frame Number		Remove	
Reel Number	013469	Frame Number	0966
Enter Reel and Frame Number		Remove	
Reel Number	013467	Frame Number	0368
Enter Reel and Frame Number		Remove	
Reel Number	013116	Frame Number	0385
Enter Reel and Frame Number		Remove	
Reel Number	022343	Frame Number	0801
Click ADD for additional Reel Number and Frame Number		Add	

This collection of information is required by 37 CFR 1.378(c). The information is required to obtain or retain a benefit by the public which is to file (and by the USPTO to process) an application. Confidentiality is governed by 35 U.S.C. 122 and 37 CFR 1.11 and 1.14. This collection is estimated to take 1 hour to complete, including gathering, preparing, and submitting the completed application form to the USPTO. Time will vary depending upon the individual case. Any comments on the amount of time you require to complete this form and/ or suggestions for reducing this burden, should be sent to the Chief Information Officer, U.S. Patent and Trademark Office, U.S. Department of Commerce, P.O. Box 1450, Alexandria, VA 22313-1450. DO NOT SEND FEES OR COMPLETED FORMS TO THIS ADDRESS. **This form can only be used when in conjunction with EFS-Web. If this form is mailed to the USPTO, it may cause delays in reinstating the patent.**

Privacy Act Statement

The Privacy Act of 1974 (P.L. 93-579) requires that you be given certain information in connection with your submission of the attached form related to a patent application or patent. Accordingly, pursuant to the requirements of the Act, please be advised that: (1) the general authority for the collection of this information is 35 U.S.C. 2(b)(2); (2) furnishing of the information solicited is voluntary; and (3) the principal purpose for which the information is used by the U.S. Patent and Trademark Office is to process and/or examine your submission related to a patent application or patent. If you do not furnish the requested information, the U.S. Patent and Trademark Office may not be able to process and/or examine your submission, which may result in termination of proceedings or abandonment of the application or expiration of the patent.

The information provided by you in this form will be subject to the following routine uses:

1. The information on this form will be treated confidentially to the extent allowed under the Freedom of Information Act (5 U.S.C. 552) and the Privacy Act (5 U.S.C. 552a). Records from this system of records may be disclosed to the Department of Justice to determine whether the Freedom of Information Act requires disclosure of these record s.

2. A record from this system of records may be disclosed, as a routine use, in the course of presenting evidence to a court, magistrate, or administrative tribunal, including disclosures to opposing counsel in the course of settlement negotiations.

3. A record in this system of records may be disclosed, as a routine use, to a Member of Congress submitting a request involving an individual, to whom the record pertains, when the individual has requested assistance from the Member with respect to the subject matter of the record.

4. A record in this system of records may be disclosed, as a routine use, to a contractor of the Agency having need for the information in order to perform a contract. Recipients of information shall be required to comply with the requirements of the Privacy Act of 1974, as amended, pursuant to 5 U.S.C. 552a(m).

5. A record related to an International Application filed under the Patent Cooperation Treaty in this system of records may be disclosed, as a routine use, to the International Bureau of the World Intellectual Property Organization, pursuant to the Patent Cooperation Treaty.

6. A record in this system of records may be disclosed, as a routine use, to another federal agency for purposes of National Security review (35 U.S.C. 181) and for review pursuant to the Atomic Energy Act (42 U.S.C. 218(c)).

7. A record from this system of records may be disclosed, as a routine use, to the Administrator, General Services, or his/her designee, during an inspection of records conducted by GSA as part of that agency's responsibility to recommend improvements in records management practices and programs, under authority of 44 U.S.C. 2904 and 2906. Such disclosure shall be made in accordance with the GSA regulations governing inspection of records for this purpose, and any other relevant (i.e., GSA or Commerce) directive. Such disclosure shall not be used to make determinations about individuals.

8. A record from this system of records may be disclosed, as a routine use, to the public after either publication of the application pursuant to 35 U.S.C. 122(b) or issuance of a patent pursuant to 35 U.S.C. 151. Further, a record may be disclosed, subject to the limitations of 37 CFR 1.14, as a routine use, to the public if the record was filed in an application which became abandoned or in which the proceedings were terminated and which application is referenced by either a published application, an application open to public inspections or an issued patent.

9. A record from this system of records may be disclosed, as a routine use, to a Federal, State, or local law enforcement agency, if the USPTO becomes aware of a violation or potential violation of law or regulation.

UNITED STATES PATENT AND TRADEMARK OFFICE

Commissioner for Patents
United States Patent and Trademark Office
P.O. Box 1450
Alexandria, VA 22313-1450
www.uspto.gov

In re Patent No. 6741566
Issue Date: May 25,2004
Application No. 09566851
Filed: May 8,2000
Attorney Docket No. LANC-7

:
:DECISION GRANTING PETITION
:UNDER 37 CFR 1.378(c)
:

This is a decision on the electronic petition, filed March 5,2009 ,under 37 CFR 1.378(c) to accept the unintentionally delayed payment of the 3.5 year maintenance fee for the above-identified patent.

The petition is **GRANTED**.

The maintenance fee is accepted, and the above-identified patent reinstated as of March 5,2009 .
This decision also constitutes notice that the fee has been accepted. An electronic copy of the petition and this decision has been created as an entry in the Image File Wrapper. Nevertheless, petitioner should print and retain an independent copy.

Telephone inquiries related to this electronic decision should be directed to the Electronic Business Center at 1-866-217-9197.

UNITED STATES PATENT AND TRADEMARK OFFICE

COMMISSIONER FOR PATENTS
UNITED STATES PATENT AND TRADEMARK OFFICE
P.O. BOX 1450
ALEXANDRIA, VA 22313-1450
www.uspto.gov

Paper No. 22

Intematix Corporation
351 Rheem Boulevard
Moraga, CA 94556

COPY MAILED

DEC 19 2003

OFFICE OF PETITIONS

In re Application of
Yi-Qun Li
Application No. 09/566,866
Filed: May 8, 2000
Attorney Docket No. 7003-001

ON PETITION

This is a decision on the renewed petition under 37 CFR 1.137(b), filed November 17, 2003, to revive the above-identified application.

The petition is Dismissed.

Any request for reconsideration of this decision must be submitted within TWO (2) MONTHS from the mail date of this decision. Extensions of time under 37 CFR 1.136(a) are permitted. The reconsideration request should include a cover letter entitled "Renewed Petition under 37 CFR 1.137(b)." This is not final agency action within the meaning of 5 U.S.C. § 704.

The above-identified application became abandoned for failure to reply within the meaning of 37 CFR 1.113 in a timely manner to the final Office action mailed January 7, 2003, which set a shortened statutory period for reply of three (3) months. Accordingly, a Notice of Abandonment was mailed on October 8, 2003.

A grantable petition under 37 CFR 1.137(b) must be accompanied by: (1) the required reply, unless previously filed; (2) the petition fee as set forth in 37 CFR 1.17(m); (3) a statement that the entire delay in filing the required reply from the due date for the reply until the filing of a grantable petition pursuant to 37 CFR 1.137(b) was unintentional; and (4) any terminal disclaimer (and fee as set forth in 37 CFR 1.20(d)) required by 37 CFR 1.137(c). Where there is a question as to whether either the abandonment or the delay in filing a petition under 37 CFR 1.137 was unintentional, the Commissioner may require additional information. See MPEP 711.03(c)(III)(C) and (D). The instant petition lack(s) item(s) (1).

The application became abandoned for failure to timely file a reply within the meaning of 37 CFR 1.113 to the final Office action mailed January 7, 2003. The proposed reply required for consideration of a petition to revive must be a Notice of Appeal (and appeal fee as required by 37 CFR 1.17(b), an amendment that prima facie places the application in condition for allowance, a Request for Continued Examination (RCE) under 37 CFR 114 or the filing of a continuing application. See MPEP 711.03(c)(III)(A)(2). Since the amendment submitted with the present petition does not prima facie place the application in condition for allowance, the reply required must be a Notice of Appeal (and appeal fee), RCE or the filing of a continuing application. See the attached Advisory Action.

Further correspondence with respect to this matter should be addressed as follows:

By mail:	Mail Stop PETITION Commissioner for Patents Post Office Box 1450 Alexandria, VA 22313-1450
By hand:	Customer Window 2201 South Clark Place Crystal Plaza 2, Room 1B03 Alexandria, VA 22313-1450
By Fax:	703) 872-6906 ATTN: Office of Petitions

Telephone inquiries concerning this decision should be directed the undersigned at (703) 308-6911.

Latrice Bond

Latrice Bond
Petitions Examiner
Office of Petitions
Office of the Deputy Commissioner
for Patent Examination Policy

Attachment: Advisory Action

UNITED STATES PATENT AND TRADEMARK OFFICE

COMMISSIONER FOR PATENTS
UNITED STATES PATENT AND TRADEMARK OFFICE
P.O. BOX 1450
ALEXANDRIA, VA 22313-1450
www.uspto.gov

Paper No. 28

Quine Intellectual Property Law Group, PC
PO Box 458
Alameda, CA 94501

COPY MAILED
MAR 0 3 2004
OFFICE OF PETITIONS

In re Application of
Yi Qun Li
Application No. 09/566,866
Filed: May 8, 2000
Attorney Docket No. 318-000100US

ON PETITION

This is a decision on the renewed petition under 37 CFR 1.137(b), filed February 23, 2004, to revive the above-identified application.

The petition is Granted.

Telephone inquiries should be directed to the undersigned at (703) 308-6911.

The application is being forwarded to Technology Center AU 1753 for processing the Request for Continued Examination under 37 CFR 1.114 filed with the instant petition.

Latrice Bond
Paralegal Specialist
Office of Petitions
Office of the Deputy Commissioner
for Patent Examination Policy

PTO/SB/66 (03-09)
Approved for use through 03/31/2012. OMB 0651-0016
U.S. Patent and Trademark Office: U.S. DEPARTMENT OF COMMERCE
Under the Paperwork Reduction Act of 1995, no persons are required to respond to a collection of information unless it displays valid OMB control number.

PETITION TO ACCEPT UNINTENTIONALLY DELAYED PAYMENT OF MAINTENANCE FEE IN AN EXPIRED PATENT (37 CFR 1.378(c))

Patent Number	Issue Date (YYYY-MM-DD)	Application Number	Filing Date (YYYY-MM-DD)	Docket Number (if applicable)
6230878	2001-05-15	09/566,955	2000-05-08	29415.0002

CAUTION: Maintenance fee (and surcharge, if any) payment must correctly identify: (1) the patent number and (2) the application number of the actual U.S. application leading to issuance of that patent to ensure the fee(s) is/are associated with the correct patent. 37 CFR 1.366(c) and (d).

SMALL ENTITY
☒ Patentee claims, or has previously claimed, small entity status. See 37 CFR 1.27.

LOSS OF ENTITLEMENT TO SMALL ENTITY STATUS
☐ Patentee is no longer entitled to small entity status. See 37 CFR 1.27(g)

NOT Small Entity		Small Entity	
Fee	Code	Fee	Code
○ 3 ½ year	(1551)	○ 3 ½ year	(2551)
○ 7 ½ year	(1552)	◉ 7 ½ year	(2552)
○ 11 ½ year	(1553)	○ 11 ½ year	(2553)

SURCHARGE
The surcharge required by 37 CFR 1.20(i)(2) (Fee Code 1558) must be paid as a condition of accepting unintentionally delayed payment of the maintenance fee.

MAINTENANCE FEE (37 CFR 1.20(e)-(g))
The appropriate maintenance fee must be submitted with this petition.

STATEMENT
THE UNDERSIGNED CERTIFIES THAT THE DELAY IN PAYMENT OF THE MAINTENANCE FEE TO THIS PATENT WAS UNINTENTIONAL

PETITIONER(S) REQUEST THAT THE DELAYED PAYMENT OF THE MAINTENANCE FEE BE ACCEPTED AND THE PATENT REINSTATED

THIS PORTION MUST BE COMPLETED BY THE SIGNATORY OR SIGNATORIES

37 CFR 1.378(d) states: "Any petition under this section must be signed by an attorney or agent registered to practice before the Patent and Trademark Office, or by the patentee, the assignee, or other party in interest."

I certify, in accordance with 37 CFR 1.4(d)(4) that I am

◉ An attorney or agent registered to practice before the Patent and Trademark Office

○ A sole patentee

○ A joint patentee; I certify that I am authorized to sign this submission on behalf of all the other patentees.

○ A joint patentee; all of whom are signing this e-petition

○ The assignee of record of the entire interest

Patent Practitioner			
A signature of the applicant or representative is required in accordance with 37 CFR 1.33 and 10.18. Please see 37 CFR 1.4(d) for the form of the signature			
Signature	/joseph r. englander/	Date (YYYY-MM-DD)	2010-03-17
Name	Joseph R. Englander	Registration Number	38871

This collection of information is required by 37 CFR 1.378(c). The information is required to obtain or retain a benefit by the public which is to file (and by the USPTO to process) an application. Confidentiality is governed by 35 U.S.C. 122 and 37 CFR 1.11 and 1.14. This collection is estimated to take 1 hour to complete, including gathering, preparing, and submitting the completed application form to the USPTO. Time will vary depending upon the individual case. Any comments on the amount of time you require to complete this form and/ or suggestions for reducing this burden, should be sent to the Chief Information Officer, U.S. Patent and Trademark Office, U.S. Department of Commerce, P.O. Box 1450, Alexandria, VA 22313-1450. DO NOT SEND FEES OR COMPLETED FORMS TO THIS ADDRESS. **This form can only be used when in conjunction with EFS-Web. If this form is mailed to the USPTO, it may cause delays in reinstating the patent.**

Privacy Act Statement

The Privacy Act of 1974 (P.L. 93-579) requires that you be given certain information in connection with your submission of the attached form related to a patent application or patent. Accordingly, pursuant to the requirements of the Act, please be advised that: (1) the general authority for the collection of this information is 35 U.S.C. 2(b)(2); (2) furnishing of the information solicited is voluntary; and (3) the principal purpose for which the information is used by the U.S. Patent and Trademark Office is to process and/or examine your submission related to a patent application or patent. If you do not furnish the requested information, the U.S. Patent and Trademark Office may not be able to process and/or examine your submission, which may result in termination of proceedings or abandonment of the application or expiration of the patent.

The information provided by you in this form will be subject to the following routine uses:

1. The information on this form will be treated confidentially to the extent allowed under the Freedom of Information Act (5 U.S.C. 552) and the Privacy Act (5 U.S.C. 552a). Records from this system of records may be disclosed to the Department of Justice to determine whether the Freedom of Information Act requires disclosure of these records.

2. A record from this system of records may be disclosed, as a routine use, in the course of presenting evidence to a court, magistrate, or administrative tribunal, including disclosures to opposing counsel in the course of settlement negotiations.

3. A record in this system of records may be disclosed, as a routine use, to a Member of Congress submitting a request involving an individual, to whom the record pertains, when the individual has requested assistance from the Member with respect to the subject matter of the record.

4. A record in this system of records may be disclosed, as a routine use, to a contractor of the Agency having need for the information in order to perform a contract. Recipients of information shall be required to comply with the requirements of the Privacy Act of 1974, as amended, pursuant to 5 U.S.C. 552a(m).

5. A record related to an International Application filed under the Patent Cooperation Treaty in this system of records may be disclosed, as a routine use, to the International Bureau of the World Intellectual Property Organization, pursuant to the Patent Cooperation Treaty.

6. A record in this system of records may be disclosed, as a routine use, to another federal agency for purposes of National Security review (35 U.S.C. 181) and for review pursuant to the Atomic Energy Act (42 U.S.C. 218(c)).

7. A record from this system of records may be disclosed, as a routine use, to the Administrator, General Services, or his/her designee, during an inspection of records conducted by GSA as part of that agency's responsibility to recommend improvements in records management practices and programs, under authority of 44 U.S.C. 2904 and 2906. Such disclosure shall be made in accordance with the GSA regulations governing inspection of records for this purpose, and any other relevant (i.e., GSA or Commerce) directive. Such disclosure shall not be used to make determinations about individuals.

8. A record from this system of records may be disclosed, as a routine use, to the public after either publication of the application pursuant to 35 U.S.C. 122(b) or issuance of a patent pursuant to 35 U.S.C. 151. Further, a record may be disclosed, subject to the limitations of 37 CFR 1.14, as a routine use, to the public if the record was filed in an application which became abandoned or in which the proceedings were terminated and which application is referenced by either a published application, an application open to public inspections or an issued patent.

9. A record from this system of records may be disclosed, as a routine use, to a Federal, State, or local law enforcement agency, if the USPTO becomes aware of a violation or potential violation of law or regulation.

UNITED STATES PATENT AND TRADEMARK OFFICE

Commissioner for Patents
United States Patent and Trademark Office
P.O. Box 1450
Alexandria, VA 22313-1450
www.uspto.gov

In re Patent No. 6230878
Issue Date: May 15,2001
Application No. 09566955
Filed: May 8,2000
Attorney Docket No. P-1391-18

:DECISION GRANTING PETITION
:UNDER 37 CFR 1.378(c)

This is a decision on the electronic petition, filed March 17,2010 ,under 37 CFR 1.378(c) to accept the unintentionally delayed payment of the 7.5 year maintenance fee for the above-identified patent.

The petition is **GRANTED**.

The maintenance fee is accepted, and the above-identified patent reinstated as of March 17,2010 .
This decision also constitutes notice that the fee has been accepted. An electronic copy of the petition and this decision has been created as an entry in the Image File Wrapper. Nevertheless, petitioner should print and retain an independent copy.

Telephone inquiries related to this electronic decision should be directed to the Electronic Business Center at 1-866-217-9197.

UNITED STATES PATENT AND TRADEMARK OFFICE

Commissioner for Patents
United States Patent and Trademark Office
P.O. Box 1450
Alexandria, VA 22313-1450
www.uspto.gov

WATCHSTONE P+D, P.L.C.
1250 CONNECTICUT AVENUE, N.W.
SUITE 700
WASHINGTON, DC 20036-2657

COPY MAILED
AUG 2 9 2008

In re Application of	:	
Johan Leo Alfons Gielis	:	
Application No. 09/566,986	:	DECISION ON PETITION
Filed: May 9, 2000	:	
Attorney Docket No. 2472.101	:	

This is a decision on the petition under the unintentional provisions of 37 CFR 1.137(b), filed April 23, 2008, to revive the above-identified application.

The petition is **GRANTED**.

The application became abandoned for failure to timely reply within the meaning of 37 CFR 1.113 to the final Office action mailed May 31, 2007, which set a shortened statutory period for reply of three (3) months. No extensions of time under the provisions of 37 CFR 1.136(a) were obtained. Accordingly, the application became abandoned on September 1, 2007. A Notice of Abandonment was mailed December 28, 2007.

The petition satisfies the requirements of 37 CFR 1.137(b) in that petitioner has supplied (1) the reply in the form of a Notice of Appeal and fee of $255.00; (2) the petition fee of $770.00; and (3) a proper statement of unintentional delay.

The two-month period for filing an appeal brief under 37 CFR 41.37 (accompanied by the fee required by 37 CFR 41.20(b)(2)), runs from the date of this decision.

Telephone inquiries concerning this decision should be directed to Joan Olszewski at (571) 272-7751.

This application is being referred to Technology Center AU 2128 to await the filing of an appeal brief or for such other appropriate reply as may be submitted to continue prosecution of the application.

Liana Walsh
Petitions Examiner
Office of Petitions

UNITED STATES PATENT AND TRADEMARK OFFICE

Commissioner for Patents
United States Patent and Trademark Office
Washington, D.C. 20231
www.uspto.gov

OIPE IAP53
FEB 27 2006
PATENT & TRADEMARK OFFICE

RPB 1170.2C1 II
Nonsubmitted

MAR 27 2002

Paper No. 15

COPY MAILED

MAR 19 2002

Director's Office
Office of Patent Publication

RECEIVED
MAR 02 2006
GROUP 3600

FITZPATRICK CELLA HARPER & SCINTO
30 ROCKEFELLER PLAZA
NEW YORK NY 10112

In re Application of	:	
David W. Vos	:	**DECISION ON PETITION**
Application No. 09/567,044	:	
Filed: May 8, 2000	:	
Attorney Docket No. 13232.00007	:	

received
4/8/02

This is a decision on the Petition Under CFR § 1.181 to Restore Pending Status to Application Presumably Regarded as Abandoned received November 2, 2001, which is being treated as a Petition to Withdraw Holding of Abandonment for the above-identified application.

The petition is **DISMISSED**.

Any request for reconsideration of this decision must be submitted within TWO (2) MONTHS from the mail date of this decision. Extensions of time under 37 CFR 1.136(a) are permitted. The reconsideration request should include a cover letter entitled "Renewed Petition for Withdrawal of Holding of Abandonment."

This application was held abandoned for failure to pay the issue fee on or before the due date of August 6, 2001.

Petitioner states that Issue Fee was timely submitted on August 3, 2001. To support this assertion petitioner has enclosed a copy of the originally submitted Issue Fee Transmittal (Form PTOL-85b), a copy of the Change of Address, and a copy of the return post card, which acknowledges receipt of the Issue Fee by the Patent and Trademark Office on August 3, 2001.

The Patent and Trademark Office (PTO) acknowledges receipt of the Issue Fee Transmittal on August 3, 2001. Unfortunately, when an attempt was made by the Office of Finance to charge the fees on August 7, 2001, the fees were not recorded due to insufficient funds in Deposit Account No. 50-1710. The petitioner therefore has not complied with 37 CFR 1.25(b), which states in part:

> ... An authorization to charge a fee to a deposit account will not be considered payment of the fee on the date the authorization to charge the fee is effective as to the particular fee to charged unless sufficient funds are present in the account to cover the fee.

RECEIVED
MAR 29 2002

In light of the non-compliance with 37 CFR 1.25(b), the holding of abandonment cannot at this time be withdrawn.

The petitioner should consider petitioning the Commissioner as follows:

File a petition for Revival of Abandoned Application or Lapsed Patent under CFR § 1.137 (a) or (b). The new rule change appears in 62 Federal Regulations, October 10, 1997 or (a) 1203 of the Official Gazette 63, October 21, 1997.

- Under 37 CFR 1.137(a), a petition for the revival of an ***unavoidably*** abandoned application must include the following:

  (1) The reply required to the outstanding Office action or notice, unless previously filed.
  (2) The petition fee set forth in § 1.17(l);
  (3) A showing to the satisfaction of the Commissioner that the entire delay in filing the required reply from the due date for the reply until the filing of a grantable petition pursuant to this paragraph was unavoidable: and
  (4) Any terminal disclaimer (and fee as set forth in § 1.20(d) required pursuant to paragraph (d) of this section.

  With respect to an application filed before June 8, 1995, any petition under § 1.137(a) that is filed more than six months after the abandonment date must —according to § 1.137(c)—be accompanied by a terminal disclaimer with disclaimer fee.

- Under 37 CFR 1.137(a), a petition for the revival of an ***unintentionally*** abandoned application must include the following:

  (1) The reply required to the outstanding Office action or notice, unless previously filed.
  (2) The petition fee as set forth in § 1.17(m);
  (3) A statement that the entire delay in filing the required reply from the due date for the reply until the filing of a grantable petition pursuant to this paragraph was unintentional. The Commissioner may require additional information where there is a question whether the delay was unintentional;
  (4) Any terminal disclaimer (and fee as set forth in § 1.20(d) required pursuant to paragraph (d) of this section.

Further correspondence with respect to this matter should be addressed as follows:

By mail:	Assistant Commissioner for Patents Box DAC Washington, DC 20231
By facsimile:	703-308-6916 Attn.: Office of Petitions
By hand:	Crystal Plaza Four, Rm. 3C23 2201 South Park Place Arlington, VA

Telephone inquires concerning this matter may be directed to the Office of Petitions at 703-305-9282.

Frederick E. Briscoe

Frederick E. Briscoe
Legal Instruments Examiner
Office of the Director
Office of Patent Publication

UNITED STATES PATENT AND TRADEMARK OFFICE

COMMISSIONER FOR PATENTS
UNITED STATES PATENT AND TRADEMARK OFFICE
WASHINGTON, D.C. 20231
www.uspto.gov

OIPE IAP53
FEB 27 2006
PATENT & TRADEMARK OFFICE

Paper No. 18

Katten Muchin Zavis Rosenman
525 West Monroe Street
Suite 1600
Chicago, Illinois 60661-3693

COPY MAILED
SEP 05 2002
OFFICE OF PETITIONS

In re Application of
David W. Vos
Application No. 09/567,044
Filed: May 8, 2000
Attorney Docket No. 13232.00007

ON PETITION

This is a decision on the petition under 37 CFR 1.137(b), filed June 4, 2002, to revive the above-identified application.

The petition is **GRANTED**.

The above-identified application became abandoned for failure submit the issue fee in a timely manner in reply to the Notice of Allowance mailed May 4, 2001, which set a statutory period for reply of three(3) months. Accordingly, the above-identified application became abandoned on August 5, 2001.

Telephone inquiries concerning this decision should be directed to Cheryl Gibson-Baylor at (703)308-5111, or in her absence, Sherry Brinkley at (703)305-9220.

The application file is being forwarded to Office of Publications for further processing.

Cheryl Gibson-Baylor
Petitions Examiner
Office of Petitions
Office of the Deputy Commissioner
for Patent Examination Policy

Sherry Brinkley
Petitions Examiner

RECEIVED
MAR 02 2006
GROUP 3600

RECEIVED
SEP 09 2002
By KMZR/KAB

UNITED STATES PATENT AND TRADEMARK OFFICE

Commissioner for Patents
United States Patent and Trademark Office
P.O. Box 1450
Alexandria, VA22313-1450
www.uspto.gov

FINNEGAN, HENDERSON, FARABOW, GARRETT & DUNNER LLP
901 NEW YORK AVENUE, NW
WASHINGTON DC 20001-4413

COPY MAILED

OCT 15 2007

OFFICE OF PETITIONS

In re Patent No. 6.389,335 :
Issue Date: May 14, 2002 :
Application No. 09/567,044 : ON PETITION
Filed: May 8, 2000 :
Attorney Docket Number: 09454.0001-03 :

This is a decision on the petition, filed November 3, 2006 and resubmitted April 2, 2007, requesting the issuance of a duplicate Letters Patent for the above-identified application.

The petition is **GRANTED**.

Since it is U.S. Patent and Trademark Office practice to assure mailing of all papers on the date indicated, there is a strong presumption that papers duly addressed and indicated as mailed, such as the Letters Patent in this application, are timely delivered to the addressee. To overcome this presumption, a verified statement with supporting evidence, such as any records which would disclose the receipt of other correspondence mailed from the U.S. Patent and Trademark Office on or about May 14, 2002, but fail to disclose receipt of the Letters Patent mailed on that date, should be promptly submitted. Further, copies of records on which receipt of the Letters Patent would have been entered had it been received are required.

However, if the loss of the Letters Patent was not the fault of the U.S. Patent and Trademark Office or if petitioner simply wishes to avoid overcoming the above-noted presumption, a petition may be filed under 37 CFR 1.182 accompanied by a petition fee of $400.00 requesting a duplicate Letters Patent.

Petitioners have not presented any evidence to prove that the Letters Patent mailed May 14, 2002 were not received by the Attorneys of Record at the time of the Patent Grant.

A review of the file reveals that a check in the amount of $130.00 was posted on June 20, 2006 and that on November 3, 2006, deposit account no. 06-0916 was charged again in the amount of $130.00 for the duplicate letters patent. Petitioner is advised that effective December 8, 2004, the fee for a petition under 37 CFR 1.182 for a Duplicate Letters Patent was set at $400.00, not $130.00 as was indicated in the petition. Petitioner's deposit account no. 06-0916 therefore has been charged a total of $270.00.

A copy of this decision is being forwarded to Publishing Division for issuance of a duplicate Letters Patent. The Publishing Division is directed to issue a duplicate Letters Patent.

Telephone inquiries concerning this decision may be directed to the undersigned Senior Petitions Attorney at (571) 272-3212. Inquiries regarding the issuance of a duplicate Letters Patent may be directed to the Publishing Division at (703) 308-9250.

Patricia Faison-Ball

Patricia Faison-Ball
Senior Petitions Attorney
Office of Petitions

cc: Krystal Paige, South Tower, 8th Floor (Fax – (571) 273-9937)

UNITED STATES PATENT AND TRADEMARK OFFICE

UNDER SECRETARY OF COMMERCE FOR INTELLECTUAL PROPERTY AND
DIRECTOR OF THE UNITED STATES PATENT AND TRADEMARK OFFICE
WASHINGTON, D.C. 20231
www.uspto.gov

NOV - 5 2001

Paper No. 18

In re Application of
Dillis V. Allen
Application No. 09/567,180
Filed: May 5, 2000
Attorney Docket No. G-32

: DECISION ON PETITION

This is a decision on the petition filed on July 13, 2001 which has recently been referred to the undersigned for consideration under 37 CFR 1.81. In the petitioner, petitioner requests that the examiner be instructed to withdraw, in part, the Reasons for Allowance set forth in the Office Action of May 22, 2001. The petition does not require a fee, and a refund of the $130.00 fee tendered with the petition will scheduled.

The petition is denied.

Petitioner requests that the portion of the Reasons for Allowance which in which the examiner states that commented on whether certain commercially available golf clubs "read on" the allowed claims be withdrawn by the examiner.

A review of the record shows that in a responsive amendment filed on January 8, 2001, petitioner argued that several of the claims "read word for word" on certain specified commercially available golf clubs. See paper No. 6, paragraph bridging pages 5 and 6 and continuing on page 6. This argument was raised as an attempt to show patentability of the claims on the basis of "commercial success". The examiner merely answered petitioner's arguments on this point.

When petitioner raised the argument in paper No. 6, petitioner placed the examiner in a position that the examiner could not escape from. Failure to address petitioner's position would have left a record in which it would appear that the examiner had agreed with that position, at least by implication. As the examiner allowed the claims for reasons other than the "commercial success" argument raised by petitioner, the examiner was not under any obligation to permit the implication to stand without rebuttal. It is not clear that the examiner has committed an error warranting supervisory correction, or that petitioner has been in any way harmed.

For the foregoing reasons, there does not appear to be any basis upon which to afford petitioner the relief requested. The application is being forwarded to the examiner for action on the Request for Continued Examination (RCE) filed on August 17, 2001. Any request for

reconsideration of this decision must be filed not more than two months from the date of this decision, see 37 CFR 1.181(f).

PETITION DENIED.

E. Rollins-Cross, Director, Patent
Examining Groups 3710 and 3720

Dillis V. Allen, Esq.
1080 Nerge Road
Suite 205
Elk Grove Village, IL 60007

UNITED STATES PATENT AND TRADEMARK OFFICE

COMMISSIONER FOR PATENTS
UNITED STATES PATENT AND TRADEMARK OFFICE
P.O. BOX 1450
ALEXANDRIA, VA 22313-1450
www.uspto.gov

MAILED
DEC 12 2003
Technology Center 2100

Paper No. 8

BLAKELY SOKOLOFF TAYLOR & ZAFMAN LLP
12400 WILSHIRE BOULEVARD
7TH FLOOR
LOS ANGELES CA 90025

In re Application of: YAN ZHAO
Application No.: 09567,255
Filed: May 09, 2000
For: **COMMON USER PROFILE SERVER AND METHOD**

DECISION ON PETITION TO WITHDRAW THE HOLDING OF ABANDONMENT

This is in reply to Petitioner's petition to Withdraw the Holding of Abandonment under 37 CFR 1.181, filed in the United States Patent and Trademark Office on November 12, 2003. No fee is required.

A review of the file record reveals that the application was held abandoned on October 01, 2003 for failure to respond to the Office Letter dated January 31, 2003 within the Shortened Statutory Period of three months set therein.

Petitioner submitted a copy of the response to the Office Letter daled January 31, 2003, and a copy of USPTO return postcard stamped May 12, 2003. Petitioner's copy of the response includes a certificate stating the date of deposit, and was deposited on April 29, 2003 with the United States Postal Service with sufficient postage as first class mail.

Since a timely response to the Office Letter dated January 31, 2003 was filed, the Petition is **GRANTED**.

The holding of abandonment dated October 01, 2003 is hereby withdrawn, and the application is restored to pending status. The application will be forwarded to the Examiner of Record for prompt action on the merits of the application.

Bot LeDynh, J.D., Ph.D.
Special Programs Examiner
Technology Center 2100
Computer Architecture, Software, and Information Security
(703) 305-0651

UNITED STATES PATENT AND TRADEMARK OFFICE

COMMISSIONER FOR PATENTS
UNITED STATES PATENT AND TRADEMARK OFFICE
P.O. BOX 1450
ALEXANDRIA, VA 22313-1450
www.uspto.gov

Paper No.

Tarek N. Fahmi
BLAKELY SOKOLOFF TAYLOR & ZAFMAN LLP
12400 Wilshire Boulevard
7th Floor
Los Angeles, CA 90025

MAIL

MAR - 9 2005

DIRECTOR OFFICE
TECHNOLOGY CENTER 2100

In re Application of:
Yan Zhao
Application No. 09/567,255
Filed: May 09, 2000
For: COMMON USER PROFILE SERVER AND METHOD

DECISION ON REQUEST TO WITHDRAW AS ATTORNEY OR AGENT

This is a decision on the Request To Withdraw from Representation filed October 26, 2004.

A grantable request to withdraw as attorney of record should indicate thereon the present mailing addresses of the attorney(s) who is/are withdrawing from the record and of the applicant. The request for withdrawal must be signed by every attorney seeking to withdraw or contain a clear indication that one attorney is signing on behalf of another/others. A request to withdraw will not be approved unless at least 30 (thirty) days would remain between the date of approval and the later of the expiration date of a time to file a response or the expiration date of the maximum time period which can be extended under 37 C.F.R. § 1. 136(a). The effective date of withdrawal being the date of decision and not the date of request. See M.P.E.P. § 402.06. 37 C.F.R. § 1.36 further requires that the applicant or patent owner be notified of the withdrawal of the attorney or agent.

The request filed October 26, 2004 meets all the requirements. Accordingly the request is **GRANTED**.

All future communications from the Office will be directed to the below-listed address until otherwise notified by applicant. This correspondence address is provided by the withdrawn attorney(s). Applicant is reminded of the obligation to promptly notify the Patent and Trademark Office (Office) of any change in correspondence address to ensure receipt of all communications from the Office.

James R. Matthews

for Vincent N. Trans
Special Program Examiner
Technology Center 2100
Computer Architecture, Software, and
Information Security
(571) 272-3613

cc: Andre L. Marais
SCHWEGMAN, LUNDBERG, WOESSNER & KLUTH, P.A.
1600 TCF Tower
121 South Eight Street
Minneapolis, MN 55402

UNITED STATES PATENT AND TRADEMARK OFFICE

Commissioner for Patents
United States Patent and Trademark Office
Washington, D.C. 20231
www.uspto.gov

Paper No. 24

SCHWEGMAN, LUNDBERG, WOESSNER & KLUTH,P.A.
P.O. BOX 2938
Minneapois MN 55402

COPY MAILED

NOV 2 5 2002

OFFICE OF PETITIONS

In re Application of :
Martin E. Davis et al :
Application No. 09/567,283 :
Filed: May 8, 2000 :
Attorney Docket No. 267.014US1 :

ON PETITION

This is a decision on the petition, filed November 12, 2002, under 37 CFR 1.313(c)(2) to withdraw the above-identified application from issue after payment of the issue fee.

The petition is **GRANTED**.

The above-identified application is withdrawn from issue for consideration of a submission under 37 CFR 1.114 (request for continued examination). See 37 CFR 1.313(c)(2).

Petitioner is advised that the issue fee paid on August 15, 2002 in the above-identified application cannot be refunded. If, however, the above-identified application is again allowed, petitioner may request that it be applied towards the issue fee required by the new Notice of Allowance.[1]

Telephone inquiries should be directed to the undersigned at (703) 305-8680.

Upon receipt of the file in the Office of Petitions, the file will be forwarded to Technology Center AU 1616 for processing of the request for continued examination under 37 CFR 1.114 and for consideration of the concurrently filed amendment and Information Disclosure Statement.

Frances Hicks
Petitions Examiner
Office of Petitions
Office of the Deputy Commissioner
for Patent Examination Policy

---

[1] The request to apply the issue fee to the new Notice must be made in writing and should be accompanied by the new Issue Fee Transmittal Form PTOL-85(b), along with a copy of this decision. Additionally, if the issue fee has increased from the previously paid issue fee, the balance due must be submitted. **Failure to *timely* request *in writing* that the previously paid issue fee be applied towards the new Notice and payment of any balance due will result in the abandonment of the application.**

UNITED STATES PATENT AND TRADEMARK OFFICE

COMMISSIONER FOR PATENTS
UNITED STATES PATENT AND TRADEMARK OFFICE
WASHINGTON, D.C. 20231
www.uspto.gov

Paper No. 6

HEWLETT PACKARD COMPANY
P O BOX 272400
INTELLECTUAL PROPERTY ADMINISTRATION
FORT COLLINS, CO 80527-2400

COPY MAILED

NOV 20 2000

OFFICE OF PETITIONS
A/C PATENTS

In re Application of
Salil Pardhan et al.
Application No. 09/567,312
Filed: May 9, 2000
Attorney Docket No.10981709-1

ON PETITION

This is in response to the "Petition Under 37 CFR 1.47(a)," filed October 6, 2000 (certificate of mailing October 4, 2000).

The petition is dismissed.

Rule 47 applicant is given TWO MONTHS from the mailing date of this decision to reply, correcting the below-noted deficiencies. Any reply should be entitled "Request for Reconsideration of Petition Under 37 CFR 1.47(a)," and should only address the deficiencies noted below, except that the reply may include an oath or declaration executed by the non-signing inventor. **FAILURE TO RESPOND WILL RESULT IN ABANDONMENT OF THE APPLICATION.** Any extensions of time will be governed by 37 CFR 1.136(a).

The above-identified application was filed on May 9, 2000 without an executed oath or declaration and naming Salil Pradham, Lacky Shah, as joint inventors.

Accordingly, on July 18, 2000, a "Notice to File Missing Parts of Application" was mailed, requiring an executed oath or declaration and a surcharge for its late filing.

In response, on October 6, 2000, the instant petition under 37 CFR 1.47(a) and $130 fee therefor, a fee of $110 for one month extension of time, copy of Notice To File Missing Parts Of Nonprovisional Application and a Combined Declaration and Power of Attorney signed by inventors Salil Pradhan, but not by joint inventor Lacky Shah, were submitted.

A grantable petition under 37 CFR 1.47(a) requires: (1) proof that the non-signing inventor cannot be reached or refuses to sign the oath or declaration after having been presented with the application papers (specification, claims and drawings); (2) an acceptable oath or declaration in compliance with 35 U.S.C. §§ 115 and 116; (3) the petition fee; and (4) a statement of the last known address of the non-signing inventor. Applicant lacks items (1) set forth above.

As to item (1), the petition under 37 CFR 1.47(a) states applicants have been unable to locate the second named inventor, Lacky Shah. The petition states they have made every effort to contact inventor Lacky Shah including: a letter sent via registered mail to the inventor's last known address; reviewed last known address with the Human Resources Department for inventor's last known employer, Hewlett-Packard Company; reviewed last known address with inventor's last known supervisor and co-workers at last known employer, and searched the Internet for the telephone number and/or address of missing inventor.

Petitioner has not provided proof that a copy of the application (specification including claims, drawings, and the declaration) was sent or given to the non-signing inventor for review.[1] The record currently fails to demonstrate, with a documented showing, that a diligent effort was made to find or locate inventor Lacky Shah, such that the declaration can be accepted under 37 CFR 1.47. The Petition Under 37 CFR 1.47(a) states that a letter via registered mail was sent to the inventor's last known address. Did the letter reached inventor Lacky Shah's last known address? Did anyone sign for the letter? The petition also states that a reviewing was made with inventor Lacky Shah's last known employer, Hewlett-Packard Company, his supervisor and co-workers. What were the results of the review? Do anyone at Hewlett-Packard Company keep contact with inventor Lacky Shah?

Where inability to find or locate a named inventor(s) is alleged, a statement of facts should be submitted that fully describes the exact facts which are relied on to establish that a *diligent effort* was made to locate the inventor. The statement(s) of fact must be signed, where at all possible, by a person having firsthand knowledge of the facts recited therein. Statements based on hearsay, will not normally by accepted. The petition Under 37 CFR 1.47 also states a search of the Internet for inventor Lacky Shah's telephone number and address was conduct. What does inspection of the phone directories for those address locations reveal? Copies of the results of the search must be referred to in any renewed petition. See MPEP 409.03(d).

If nonsigning inventor Lacky Shah is located, then a copy of the transmittal letter for the application papers, as well as a copy of the proof of service on inventor Lacky Shah, is required. A forwarding address should be requested, and if the papers are returned and attempts to locate

---

[1] MPEP 409.03(d).

the inventors, e.g., through E-mail, the Internet[2] or the telephone continue to fail, then rule 47 applicants will have established that inventor Lacky Shah cannot be reached.

Petitioner must also provide proof that the inventor refuses to sign the declaration after being presented with the entire application.[3] If there is a written refusal, a copy of the written refusal should be provided with the renewed petition. If the refusal is made orally to a person, then that person must provide details of the refusal in an affidavit or declaration of facts.

Further correspondence with respect to this matter should be addressed as follows:

By mail: Assistant Commissioner for Patents
Box DAC
Washington, D.C. 20231

By FAX: (703) 308-6916
Attn: Special Program Law Office

By hand: Crystal Plaza Four, Suite 3C23
2201 S. Clark Place
Arlington, VA

In order to expedite consideration of the petition under 37 CFR 1.47(a), petitioner may wish to submit the renewed petition by facsimile transmission to the telephone number indicated above and to the attention of Irvin Dingle.

Telephone inquiries related to this decision should be directed to Irvin Dingle at (703) 306-5684.

Frances Hicks

Frances Hicks
Lead Petitions Examiner
Office of Petitions
Office of the Deputy Commissioner
for Patent Examination Policy

---

[2] A brief Internet search indicated a listing for "Lacky Shah" in Sunnyvale, CA.

[3] MPEP 406.03(D).

UNITED STATES PATENT AND TRADEMARK OFFICE

COMMISSIONER FOR PATENTS
UNITED STATES PATENT AND TRADEMARK OFFICE
WASHINGTON, D.C. 20231
www.uspto.gov

Paper No. 8

HEWLETT PACKARD COMPANY
P.O. BOX 272400
INTELLECTUAL PROPERTY ADMINISTRATION
FORT COLLINS, CO 80527-2400

COPY MAILED

JAN 29 2001

OFFICE OF PETITIONS
A/C PATENTS

In re Application of
Salil Pardhan et al.
Application No. 09/567,312
Filed: May 9, 2000
For: METHOD AND APPARATUS FOR TRACE BASED ADAPTIVE RUN TIME COMPILER

: DECISION ACCORDING
:STATUS UNDER 37 CFR 1.47(a)

This is in response to the "Petition Under 37 CFR 1.47(a)," filed December 27, 2000.

The petition is granted.

Petitioner has shown that the non-signing inventor cannot be located to join in the filing of the above-identified application.

The above-identified application and papers have been reviewed and found in compliance with 37 CFR 1.47(a). This application is hereby accorded Rule 1.47(a) status. As provided in Rule 1.47(a), this Office will forward notice of this application's filing to the non-signing inventor at the address given in the Declaration. Notice of the filing of this application will also be published in the Official Gazette.

Telephone inquiries regarding this decision should be directed to Irvin Dingle at (703) 306-5684.

This application is being forwarded to the Initial Examination Division for preexamination processing.

Frances Hicks

Frances Hicks
Lead Petitions Examiner
Office of Petitions
Office of the Deputy Commissioner
for Patent Examination Policy

UNITED STATES PATENT AND TRADEMARK OFFICE

COMMISSIONER FOR PATENTS
UNITED STATES PATENT AND TRADEMARK OFFICE
WASHINGTON, D.C. 20231
www.uspto.gov

LACKY SHAH
1228 SUNRISE DR.
FREEMONT, CA 94539

COPY MAILED

JAN 29 2001

OFFICE OF PETITIONS
A/C PATENTS

In re Application of
Salil Pradhan and Lacky Shah
Application No. 09/567,312
Filed: May 9, 2000
For: METHOD AND APPARATUS FOR TRACE BASED ADAPTIVE RUN TIME COMPILER

Dear Mr. Shah:

You are named as a joint inventor in the above identified United States patent application, filed under the provisions of 35 U.S.C. 116 (United States Code), and 37 CFR 1.47(a), Rules of Practice in Patent Cases. Should a patent be granted on the application you will be designated therein as a joint inventor.

As a named inventor you are entitled to inspect any paper in the file wrapper of the application, order copies of all or any part thereof (at a prepaid cost per 37 CFR 1.19) or make your position of record in the application. Alternatively, you may arrange to do any of the preceding through a registered patent attorney or agent presenting written authorization from you. If you care to join the application, counsel of record (see below) would presumably assist you. Joining in the application would entail the filing of an appropriate oath or declaration by you pursuant to 37 CFR 1.63.

Telephone inquiries regarding this communication should be directed to the Irvin Dingle at (703) 306-5684. Requests for information regarding your application should be directed to the File Information Unit at (703) 308-2733. Information regarding how to pay for and order a copy of the application, or a specific paper in the application, should be directed to Certification Division at (703) 308-9726 or 1 (800) 972-6382 (outside the Washington D.C. area).

Frances Hicks

Frances Hicks
Lead Petitions Examiner
Office of Petitions
Office of the Deputy Commissioner
for Patent Examination Policy

cc:

Hewlett Packard Company
P.O. Box 272400
Intellectual Property Administration
Fort Collins, CO 80527-2400

UNITED STATES PATENT AND TRADEMARK OFFICE

Commissioner for Patents
United States Patent and Trademark Office
P.O. Box 1450
Alexandria, VA 22313-1450
www.uspto.gov

COPY MAILED

FEB 16 2005

OFFICE OF PETITIONS

KATTEN MUCHIN ZAVIS ROSENMAN
575 MADISON AVENUE
NEW YORK, NY 10022-2585

In re Application of	:	
Keiji Nunomura et al	:	
Application No. 09/567,344	:	ON PETITION
Filed: May 9, 2000	:	
Attorney Docket No. (NEYM17.319 (100818-16811)	:	

This is a decision on the petition under 37 CFR 1.137(b), filed October 18, 2004, to revive the above-identified application.

The petition is **GRANTED**.

The above-identified application became abandoned for failure to submit the issue fee in a timely manner in reply to the Notice of Allowance mailed June 18, 2002, which set a statutory period for reply of three (3) months. Accordingly, the above-identified application became abandoned on September 19, 2002.

The above-identified application has been abandoned for an extended period of time. The Patent and Trademark Office is relying on petitioner's duty of candor and good faith and accepting the statement that the entire delay in filing the required reply from the due date for the reply until the filing of a grantable petition pursuant to 37 CFR 1.137(b) was unintentional. See Changes to Patent Practice and Procedure, 62 Fed. Reg. at 53160 and 53178; 1203 Off. Gaz. Pat. Office at 88 and 103 (responses to comments 64 and 109) (applicant obligated under 37 CFR 10.18 to inquire into the underlying facts and circumstances when providing the statement required by 37 CFR 1.137(b) to the Patent and Trademark Office).

Telephone inquiries concerning this decision should be directed to the undersigned at (571) 272-3208.

This matter is being referred to the Office of Patent Publication.

Karen Creasy

Karen Creasy
Petitions Examiner
Office of Petitions
Office of the Deputy Commissioner
for Patent Examination Policy

Under the Paperwork Reduction Act of 1995, no persons are required to respond to a collection of information unless it displays valid OMB control number.

PETITION TO ACCEPT UNINTENTIONALLY DELAYED PAYMENT OF MAINTENANCE FEE IN AN EXPIRED PATENT (37 CFR 1.378(c))

Patent Number	Issue Date (YYYY-MM-DD)	Application Number	Filing Date (YYYY-MM-DD)	Docket Number (if applicable)
6357706	2002-03-19	09567378	2000-05-10	

CAUTION: Maintenance fee (and surcharge, if any) payment must correctly identify: (1) the patent number and (2) the application number of the actual U.S. application leading to issuance of that patent to ensure the fee(s) is/are associated with the correct patent. 37 CFR 1.366(c) and (d).

SMALL ENTITY
☒ Patentee claims, or has previously claimed, small entity status. See 37 CFR 1.27.

LOSS OF ENTITLEMENT TO SMALL ENTITY STATUS
☐ Patentee is no longer entitled to small entity status. See 37 CFR 1.27(g)

NOT Small Entity		Small Entity	
Fee	Code	Fee	Code
○ 3 ½ year	(1551)	◉ 3 ½ year	(2551)
○ 7 ½ year	(1552)	○ 7 ½ year	(2552)
○ 11 ½ year	(1553)	○ 11 ½ year	(2553)

SURCHARGE
The surcharge required by 37 CFR 1.20(i)(2) (Fee Code 1558) must be paid as a condition of accepting unintentionally delayed payment of the maintenance fee.

MAINTENANCE FEE (37 CFR 1.20(e)-(g))
The appropriate maintenance fee must be submitted with this petition.

STATEMENT
THE UNDERSIGNED CERTIFIES THAT THE DELAY IN PAYMENT OF THE MAINTENANCE FEE TO THIS PATENT WAS UNINTENTIONAL

PETITIONER(S) REQUEST THAT THE DELAYED PAYMENT OF THE MAINTENANCE FEE BE ACCEPTED AND THE PATENT REINSTATED

THIS PORTION MUST BE COMPLETED BY THE SIGNATORY OR SIGNATORIES

37 CFR 1.378(d) states: "Any petition under this section must be signed by an attorney or agent registered to practice before the Patent and Trademark Office, or by the patentee, the assignee, or other party in interest."

I certify, in accordance with 37 CFR 1.4(d)(4) that I am

○ An attorney or agent registered to practice before the Patent and Trademark Office

○ A sole patentee

○ A joint patentee; I certify that I am authorized to sign this submission on behalf of all the other patentees.

○ A joint patentee; all of whom are signing this e-petition

◉ The assignee of record of the entire interest

The Assignee of record of the entire interest			
Under 37 CFR 3.71 an assignee becomes of record by filing a statement in compliance with 37 CFR 3.73(b). Signature requirements are set forth in 37 CFR 1.4(d), and the undersigned certifies that he / she is empowered to act on behalf of the assignee of the entire interest			
Signature	/Gregory Marbury/	Date (YYYY-MM-DD)	2008-03-19
Name	Gregory Marbury		
Enter Reel and Frame Number		Remove	
Reel Number	020540	Frame Number	0208
Click ADD for additional Reel Number and Frame Number		Add	

This collection of information is required by 37 CFR 1.378(c). The information is required to obtain or retain a benefit by the public which is to file (and by the USPTO to process) an application. Confidentiality is governed by 35 U.S.C. 122 and 37 CFR 1.11 and 1.14. This collection is estimated to take 1 hour to complete, including gathering, preparing, and submitting the completed application form to the USPTO. Time will vary depending upon the individual case. Any comments on the amount of time you require to complete this form and/ or suggestions for reducing this burden, should be sent to the Chief Information Officer, U.S. Patent and Trademark Office, U.S. Department of Commerce, P.O. Box 1450, Alexandria, VA 22313-1450. DO NOT SEND FEES OR COMPLETED FORMS TO THIS ADDRESS. **This form can only be used when in conjunction with EFS-Web. If this form is mailed to the USPTO, it may cause delays in reinstating the patent.**

Privacy Act Statement

The Privacy Act of 1974 (P.L. 93-579) requires that you be given certain information in connection with your submission of the attached form related to a patent application or patent. Accordingly, pursuant to the requirements of the Act, please be advised that: (1) the general authority for the collection of this information is 35 U.S.C. 2(b)(2); (2) furnishing of the information solicited is voluntary; and (3) the principal purpose for which the information is used by the U.S. Patent and Trademark Office is to process and/or examine your submission related to a patent application or patent. If you do not furnish the requested information, the U.S. Patent and Trademark Office may not be able to process and/or examine your submission, which may result in termination of proceedings or abandonment of the application or expiration of the patent.

The information provided by you in this form will be subject to the following routine uses:

1. The information on this form will be treated confidentially to the extent allowed under the Freedom of Information Act (5 U.S.C. 552) and the Privacy Act (5 U.S.C. 552a). Records from this system of records may be disclosed to the Department of Justice to determine whether the Freedom of Information Act requires disclosure of these record s.

2. A record from this system of records may be disclosed, as a routine use, in the course of presenting evidence to a court, magistrate, or administrative tribunal, including disclosures to opposing counsel in the course of settlement negotiations.

3. A record in this system of records may be disclosed, as a routine use, to a Member of Congress submitting a request involving an individual, to whom the record pertains, when the individual has requested assistance from the Member with respect to the subject matter of the record.

4. A record in this system of records may be disclosed, as a routine use, to a contractor of the Agency having need for the information in order to perform a contract. Recipients of information shall be required to comply with the requirements of the Privacy Act of 1974, as amended, pursuant to 5 U.S.C. 552a(m).

5. A record related to an International Application filed under the Patent Cooperation Treaty in this system of records may be disclosed, as a routine use, to the International Bureau of the World Intellectual Property Organization, pursuant to the Patent Cooperation Treaty.

6. A record in this system of records may be disclosed, as a routine use, to another federal agency for purposes of National Security review (35 U.S.C. 181) and for review pursuant to the Atomic Energy Act (42 U.S.C. 218(c)).

7. A record from this system of records may be disclosed, as a routine use, to the Administrator, General Services, or his/her designee, during an inspection of records conducted by GSA as part of that agency's responsibility to recommend improvements in records management practices and programs, under authority of 44 U.S.C. 2904 and 2906. Such disclosure shall be made in accordance with the GSA regulations governing inspection of records for this purpose, and any other relevant (i.e., GSA or Commerce) directive. Such disclosure shall not be used to make determinations about individuals.

8. A record from this system of records may be disclosed, as a routine use, to the public after either publication of the application pursuant to 35 U.S.C. 122(b) or issuance of a patent pursuant to 35 U.S.C. 151. Further, a record may be disclosed, subject to the limitations of 37 CFR 1.14, as a routine use, to the public if the record was filed in an application which became abandoned or in which the proceedings were terminated and which application is referenced by either a published application, an application open to public inspections or an issued patent.

9. A record from this system of records may be disclosed, as a routine use, to a Federal, State, or local law enforcement agency, if the USPTO becomes aware of a violation or potential violation of law or regulation.

UNITED STATES PATENT AND TRADEMARK OFFICE

Commissioner for Patents
United States Patent and Trademark Office
P.O. Box 1450
Alexandria, VA 22313-1450
www.uspto.gov

In re Patent No. 6357706
Issue Date: March 19,2002
Application No. 09567378
Filed: May 10,2000
Attorney Docket No. 1588-1002

:

:DECISION GRANTING PETITION
:UNDER 37 CFR 1.378(c)

:

This is a decision on the electronic petition, filed March 19,2008 ,under 37 CFR 1.378(c) to accept the unintentionally delayed payment of the 3.5 year maintenance fee for the above-identified patent.

The petition is GRANTED.

The maintenance fee is accepted, and the above-identified patent reinstated as of March 19,2008 . This decision also constitutes notice that the fee has been accepted. An electronic copy of the petition and this decision has been created as an entry in an Image File Wrapper. Nevertheless, petitioner should print and retain an independent copy

Telephone inquires related to this electronic decision should be directed to the Electronic Business Center at 1-866-217-9197.

UNITED STATES PATENT AND TRADEMARK OFFICE

UNDER SECRETARY OF COMMERCE FOR INTELLECTUAL PROPERTY AND
DIRECTOR OF THE UNITED STATES PATENT AND TRADEMARK OFFICE
WASHINGTON, DC 20231
www.uspto.gov

AUG 11 2000

Paper No. 4

In re Application of	:	
Doris B. Dolan	:	
Serial No. 09/567,392	:	DECISION ON PETITION
Filed: May 9, 2000	:	TO MAKE SPECIAL
For: POSTURE PACK	:	

Applicant's petition, filed May 9, 2000, requests that this application be rendered special for examination in that applicant is over sixty-five (65) years of age.

The petition has been reviewed and is found to be in compliance with the requirements for special status as set forth in Section 708.02(IV) of the Manual of Patent Examining Procedure (MPEP).

PETITION GRANTED.

E. Rollins-Cross, Director
Technology Center 3700

Nathan Boatner
PMB 692
7095 Hollywood Boulevard
Los Angeles, CA 90028

UNITED STATES PATENT AND TRADEMARK OFFICE

Commissioner for Patents
United States Patent and Trademark Office
P.O. Box 1450
Alexandria, VA 22313-1450
www.uspto.gov

JOSEPH S. TRIPOLI
THOMSON MULTIMEDIA LICENSING, INC
PATENT OPERATION
TWO INDEPENDENCE WAY, PO BOX 5312
PRINCETON, NJ 08543-5312

COPY MAILED

JUL 07 2008

In re Application of	:	
Mark R. Mayernick, et al.	:	
Application No. 09/567,398	:	DECISION ON PETITION
Filed: May 9, 2000	:	
Attorney Docket No. RCA-90.185	:	

This is a decision on the petition under the unintentional provisions of 37 CFR 1.137(b), filed December 27, 2007, to revive the above-identified application.

The petition is **GRANTED**.

The application became abandoned for failure to reply in a timely manner to the non-final Office action mailed, June 23, 2006, which set a shortened statutory period for reply of three (3) months. No extensions of time under the provisions of 37 CFR 1.136(a) were obtained. Accordingly, the application became abandoned on September 24, 2006.

The petition satisfies the requirements of 37 CFR 1.137(b) in that petitioner has supplied (1) the reply in the form of an amendment, (2) the petition fee of $1540, and (3) a proper statement of unintentional delay.

It is not apparent whether the statement of unintentional delay was signed by a person who would have been in a position of knowing that the entire delay in filing the required reply from the due date for the reply until the filing of a grantable petition pursuant to 37 CFR 1.137(b) was unintentional. Nevertheless, in accordance with 37 CFR 10.18, the statement is accepted as constituting a certification of unintentional delay. However, in the event that petitioner has no knowledge that the delay was unintentional, petitioner must make such an inquiry to ascertain that, in fact, the delay was unintentional. If petitioner discovers that the delay was intentional, petitioner must so notify the Office.

There is no indication that the person signing the instant petition was ever given a power of attorney or authorization of agent to prosecute the above-identified application. In accordance with 37 CFR 1.34(a), the signature appearing on the petition shall constitute a representation to the United States Patent and Trademark Office that he/she is authorized to represent the particular party in whose behalf he/she acts. However, if petitioner desires to receive future correspondence regarding this application, the appropriate power of attorney or authorization of agent must be submitted. A courtesy copy of this decision is being mailed to petitioner. Nevertheless, all future correspondence regarding this application file will be directed solely to the address of record until otherwise instructed.

Telephone inquiries concerning this decision should be directed to undersigned at (571) 272-1642.

This application is being referred to Technology Center AU 2155 for appropriate action by the Examiner in the normal course of business on the reply received December 27, 2007.

April M. Wise
Petitions Examiner
Office of Petitions

cc: JOEL M. FOGELSON
TWO INDEPENDENCE WAY
SUITE 200
PRINCETON, NJ 08540

UNITED STATES PATENT AND TRADEMARK OFFICE

UNITED STATES DEPARTMENT OF COMMERCE
United States Patent and Trademark Office
Address: COMMISSIONER FOR PATENTS
P.O. Box 1450
Alexandria, Virginia 22313-1450
www.uspto.gov

Robert D. Shedd, Patent Operations
THOMSON Licensing LLC
P.O. Box 5312
Princeton, NJ 08543-5312

Mail Date: 04/23/2010

Applicant	: Mark R. Mayernick	: DECISION ON REQUEST FOR
Patent Number	: 7574494	: RECALCULATION of PATENT
Issue Date	: 08/11/2009	: TERM ADJUSTMENT IN VIEW
Appliction No	: 09/567,398	: OF WYETH
Filed	: 05/09/2000	:
		:

The Patentee's Request for Recalculation is **DISMISSED.**

This Request is deemed ineligible for consideration for one or more of the following reasons:

(A). The patent for which PTA recalculation is requested is either a design or reissue application or is a reexamination proceeding;

(B). The patent for which PTA recalculation is requested resulted from a utility or plant application filed under 35 USC 111(a) before May 29, 2000 and no CPA filed in the application on/after May 29, 2000;

(C). The patent for which PTA recalculation is requested resulted from an international application in which the international filing date was before May 29, 2000 and no CPA filed in the application on/after May 29, 2000;

(D). The patent for which PTA recalculation is requested issued on/after March 2, 2010;

(E). The Request for Recalculation was filed more than 180 days after the grant date of the patent and the request was not filed within two months of a dismissal of a request for reconsideration of the of the patent term under 37 CFR 1.705(d);

(F). The Request for Recalculation is not solely limited to USPTO pre-Wyeth interpretation of 35 U.S.C. 154(b)(2)(A);

or

(G). A civil action was filed pursuant to 35 U.S.C. 154(b)(4)(A)concerning the same patent at issue in this request.

Patentee may file a reply to this decision dismissing the Request for Recalculation. Patentee must file such reply within one month or thirty days, whichever is longer, of the mail date of the decision dismissing the Request for Recalculation. No fee is required if patentee is asserting in the reply that the dismissal for ineligibility is improper.

Patentee should use document code PET.OP if electronically filing a reply to this dismissal. If the USPTO finds that the request was improperly deemed ineligible, the USPTO will mail applicant a recalculation determination.

Patentee should be aware that in order to preserve the right to review in the United States District Court for the District of Columbia of the USPTO patent term adjustment determination, patentee must ensure that he or she also take the steps required under 35 U.S.C. 154(b)(4)(A). Nothing in the request for recalculation should be construed as providing an alternative time frame for commencing a civil action under 35 U.S.C. 154 (b)(4)(A).

Any questions concerning this decision should be directed to the Office of Patent Legal Administration at 571-272-7702.

UNITED STATES DEPARTMENT OF COMMERCE
Patent and Trademark Office
ASSISTANT SECRETARY AND COMMISSIONER
OF PATENTS AND TRADEMARKS
Washington, D.C. 20231

#3

MAILED
OCT 2 6 2000
Office of Director
Technology Center 1600

IVOR M HUGHES
175 COMMERCE VALLEY DRIVE WEST
SUITE 200
THORNHILL , ONC L3T7P-6
CANADA

In re Application of
Kenneth S. Albert et al
Serial No.: 09/567,451
Filed: May 8, 2000
Attorney Docket No.: PT1830000

: PETITION TO MAKE SPECIAL

This is in response to applicants' petition filed September 20, 2000, to make the above-identified application special under the provisions of 37 CFR 1.102(d).

Applicant has satisfied the provisions set forth in M.P.E.P. 708.02, VIII. Therefor the petition is **GRANTED**.

The following condition applies to the grant of this petition: If, upon examination, it is determined that a restriction requirement is necessary because of multiple inventions being claimed, applicant will be required to make an election without traverse of a single invention to be prosecuted. Failure to make an election without traverse will void the special status accorded in this decision.

The application will be forwarded to the examiner for action on the merits commensurate with this decision.

Should there be any questions with regard to this letter please contact William R. Dixon, Jr. by letter addressed to the Director, Technology Center 1600, Washington, DC 20231, or by telephone at (703) 308-3824 or by facsimile transmission at (703) 305-3599.

William R. Dixon, Jr.
Special Program Examiner
Technology Center 1600

UNITED STATES PATENT AND TRADEMARK OFFICE

UNDER SECRETARY OF COMMERCE FOR INTELLECTUAL PROPERTY AND
DIRECTOR OF THE UNITED STATES PATENT AND TRADEMARK OFFICE
WASHINGTON, DC 20231
www.uspto.gov

MAILED

JAN 13 2003

#7

DIRECTOR'S OFFICE
TECHNOLOGY CENTER 3600

Leonard Charles Suchyta, Esq.
GTE Services Corporation
600 Hidden Ridge Drive HQEO3G13
Irving, TX 75038

In re Application of :
Clyde Musgrave :
Application No. 09/567,453 :
Filed: May 8, 2000 :
For: BIOMETRIC CERTIFYING AUTHORITIES

DECISION ON PETITION
TO WITHDRAW THE
HOLDING OF ABANDONMENT

This is a decision on the applicant's papers filed August 12, 2002 and November 14, 2002, which are being treated as a petition to withdraw the holding of abandonment. There is no fee required for this petition.

The petition is **GRANTED**.

A review of the file record indicates that an Office action was mailed on April 25, 2001. A three-month shortened statutory period to respond was set. Although no Notice of Abandonment has been mailed, the application is in fact abandoned for failure to respond to the Office action mailed April 25, 2001.

Applicant submits that the Office action was not received by the applicant and offers proof in the form of docket reports which do not have an entry for the above-noted Office action. A copy of a preliminary amendment is also included.

A review of the file record reveals that on August 15, 2000, a request to change the address of record was filed. However, that request was not processed. As a consequence, the Office action mailed April 25, 2001 was mailed to the wrong address. Therefore, since the Office action was mailed to an incorrect address, the abandonment is hereby withdrawn.

The application is being forwarded to the Supervisory Legal Instruments Examiner for entry of the preliminary amendment. It will then be forwarded to the examiner for prompt consideration. A new Office action will be issued which will reset the period for response.

Telephone inquiries relative to this decision should be directed to Special Programs Examiner Kenneth J. Dorner at (703) 308-0866.

Kenneth J. Dorner

Kenneth J. Dorner
Special Programs Examiner
Patent Technology Center 3600
(703) 308-0866

Kjd: 12/23/02

UNITED STATES PATENT AND TRADEMARK OFFICE

COMMISSIONER FOR PATENTS
UNITED STATES PATENT AND TRADEMARK OFFICE
P.O. BOX 1450
ALEXANDRIA, VA 22313-1450
WWW.USPTO.GOV

Paper No. 17

ELLEN S. COGEN
GIFFORD KRASS GROH SPRINKLE
ANFRTDON & CITKOWSKI PC
280 N OLD WOODWARD AVE SUITE 400
BIRMINGHAM, MI 48009-5394

COPY MAILED

JUN 0 2 2003

OFFICE OF PETITIONS

In re Application of	:	
Gail W. Wertz et al	:	
Application No. 09/567,458	:	NOTICE
Filed: May 8, 2000	:	
Attorney Docket No. UAB-11904/22	:	

This is a notice regarding your request for acceptance of a fee deficiency submission under 37 CFR 1.28. On September 1, 1998, the Court of Appeals for the Federal Circuit held that 37 CFR 1.28(c) is the sole provision governing the time for correction of the erroneous payment of the issue fee as a small entity. **See DH Technology v. Synergystex International, Inc. 154 F.3d 1333, 47 USPQ2d 1865 (Fed. Cir. Sept. 1, 1998).**

The Office no longer investigates or rejects original or reissue applications under 37 CFR 1.56. **1098 Off. Gaz. Pat. Office 502 (January 3, 1989)**. Therefore, nothing in this Notice is intended to imply that an investigation was done.

Your fee deficiency submission under 37 CFR 1.28 is hereby **ACCEPTED**.

Inquiries related to this communication should be directed to the Office of Petitions Staff at (703) 305-9285.

This file is being forwarded to Technology Center AU 1648.

Wan Laymon
Petitions Examiner
Office of Petitions
Office of the Deputy Commissioner
for Patent Examination Policy

UNITED STATES PATENT AND TRADEMARK OFFICE

COMMISSIONER FOR PATENTS
UNITED STATES PATENT AND TRADEMARK OFFICE
P.O. BOX 1450
ALEXANDRIA, VA 22313-1450
www.uspto.gov

JUL 16 2004

FULBRIGHT & JAWORSKI LLP
666 FIFTH AVENUE
NEW YORK, NY 10103

In re Application of: Paulo Arruda et al. Serial No.: 09/567,465 Filed: May 9, 2000 Attorney Docket No.: FAPSEP201	: : : : :	DECISION ON PETITION TO WITHDRAW THE HOLDING OF ABANDONMENT

This is in response to applicants' petition under 37 CFR. § 1.181 filed on February 24, 2004, requesting withdrawal of the holding of abandonment of the application based on "the interest of customer service".

A review of the file history shows that there were many sequence compliance letters sent to applicant, which were addressed by applicants in a timely manner. On February 17, 2004, the examiner mailed a Notice of Abandonment to applicants.

Applicants state that each sequence compliance report required different items and that applicants have complied each time, but the PTO changed requirements each time. Applicants also state that in the Office action of February 17, 2004, there was no "Raw Sequence Error Listing Report" such that applicants had no way to respond. Applicants also provided a further listing in an attempt to comply with the sequence requirements.

Applicants' petition is **GRANTED**. The application is restored to pending status with the mailing date of this decision and the Sequence Listing has been entered as of March 5, 2004. This application is being forwarded to the examiner for further consideration.

Should there be any questions about this decision, please contact Marianne C. Seidel by letter addressed to Director, TC 1600, at the address listed above, or by telephone at 571-272-0584 or by facsimile at 703-872-9306.

Bruce Kisliuk
Director, Technology Center 1600

UNITED STATES PATENT AND TRADEMARK OFFICE

Commissioner for Patents
United States Patent and Trademark Office
P.O. Box 1450
Alexandria, VA 22313-1450
www.uspto.gov

HERSHKOVITZ & ASSOCIATES
2845 DUKE STREET
ALEXANDRIA VA 22314

Paper No. 14

COPY MAILED

SEP 10 2007

OFFICE OF PETITIONS

In re Patent No. 6,438,547
Issue Date: August 20, 2002
Application No. 09/567,492
Filed: May 8, 2000
Attorney Docket No. P65331

DECISION ON PETITION

This is a decision on the petition under 37 CFR 1.182, filed June 8, 2007, requesting issuance of a duplicate Letters Patent for the above-identified patent. In addition, this correspondence addresses petitioner's request for acceptance of a fee deficiency submission under 37 CFR 1.28(c), filed April 17, 2007.

The petition under 37 CFR 1.182 is **GRANTED**.

The Publishing Division is directed to issue a duplicate Letters Patent.

As authorized, the $400 fee for the petition under 37 CFR 1.182 has been assessed to petitioner's credit card.

Regarding the fee deficiency submission, the Office no longer investigates or rejects original or reissue patent under 37 CFR 1.56. **1098 Off. Gaz. Pat. Office 502 (January 3, 1989)**. Therefore, nothing in this decision is intended to imply that an investigation was done.

Your fee deficiency submission under 37 CFR 1.28 is hereby **ACCEPTED**.

This patent is no longer entitled to small entity status. Accordingly, all future fees paid in this patent must be paid at the large entity rate.

The REVOCATION OF POWER OF ATTORNEY WITH NEW POWER OF ATTORNEY AND CHANGE OF CORRESPONDENCE ADDRESS, filed April 17, 2007 has been entered and made of record. Please find enclosed notices reflecting the changes.

Telephone inquiries concerning this decision may be directed to the undersigned at (571) 272-3230. Inquiries regarding the issuance of a duplicate Letters Patent may be directed to Krystal Paige in the Publishing Division at (703) 308-9250, Ext. 139.

A copy of this decision is being faxed to Publishing Division for issuance of a duplicate Letters Patent.

Shirene Willis Brantley

Shirene Willis Brantley
Senior Petitions Attorney
Office of Petitions

cc: Krystal Paige, South Tower, 8th Floor, Room C32 (Fax No. (571) 270-9937)

UNITED STATES PATENT AND TRADEMARK OFFICE

Commissioner for Patents
United States Patent and Trademark Office
P.O. Box 1450
Alexandria, VA 22313-1450
www.uspto.gov

WESTMAN CHAMPLIN & KELLY, P.A.
SUITE 1400
900 SECOND AVENUE SOUTH
MINNEAPOLIS, MN 55402

COPY MAILED

DEC 23 2009

OFFICE OF PETITIONS

In re Patent No. 6,453,758 :
Issue Date: September 24, 2002 :
Application No. 09/567,552 :
Filed: May 5, 2000 :
Attorney Docket No. M419.12-0017

NOTICE

This is a notice regarding your request for acceptance of a fee deficiency submission under 37 CFR 1.28. On September 1, 1998, the Court of Appeals for the Federal Circuit held that 37 CFR 1.28(c) is the sole provision governing the time for correction of the erroneous payment of the issue fee as a small entity. **See DH Technology v. Synergystex International, Inc. 154 F.3d 1333, 47 USPQ2d 1865 (Fed. Cir. Sept. 1, 1998).**

The Office no longer investigates or rejects original or reissue applications under 37 CFR 1.56. **1098 Off. Gaz. Pat. Office 502 (January 3, 1989)**. Therefore, nothing in this Notice is intended to imply that an investigation was done.

Your fee deficiency submission under 37 CFR 1.28 is hereby **ACCEPTED**.

Inquiries related to this communication should be directed to Irvin Dingle at (571) 272-3210.

Irvin Dingle
Petitions Examiner
Office of Petitions

UNITED STATES PATENT AND TRADEMARK OFFICE

COMMISSIONER FOR PATENTS
UNITED STATES PATENT AND TRADEMARK OFFICE
P.O. BOX 1450
ALEXANDRIA, VA 22313-1450

Paper No. 14

DAVIS & ASSOCIATES
PO BOX 1093
DRIPPING SPRINGS, TX 78620

COPY MAILED
FEB 13 2004
OFFICE OF PETITIONS

In re Application of :
Carrick et al. :
Application No. 09/567,576 : ON PETITION
Filed: May 10, 2000 :
Attorney Docket No. 74035.P0002 :

This decision concerns the September 22, 2003 "Petition to Suspend Rule Requirements under 37 CFR 1.183" which is being properly treated as a request under 37 CFR 1.48 that an inventor be added, and a petition under 37 CFR 1.183 that the requirement under 37 CFR 1.64(a) be waived.[1]

The petition under 37 CFR 1.183 is **GRANTED.**
The request under 37 CFR 1.48 is **DISMISSED.**

On May 10, 2000, the application was filed along with a declaration naming 4 inventors for the claimed invention: John C. Carrick ("Carrick"), Stuart D. Brorson ("Brorson"), Eric J. Frankfort ("Frankfort") and Paul C. Talmadge ("Talmadge").

The instant §1.48 request seeks to add a fifth inventor, Roger P. Holmstrom ("Holmstrom").

Under 37 CFR 1.48(a), Holmstrom may be added provided that the request is accompanied by:

(1) a statement from Holmstrom that the error in the inventorship, i.e., the omission of his name in the original declaration, occurred without deceptive intention on his part;[2]

(2) a proper oath/declaration signed by all of the originally-named inventors as well as Holmstrom;[3]

---

1 MPEP 201.03 37 CFR 1.48(a) (B) Oath or Declaration (Rev. 1, Feb. 2003) (Where . . . it is [the] original inventor . . . who refuses to cooperate, [this] . . . inventor is merely required to re-execute an oath or declaration in compliance with 37 CFR 1.63 . . . In such circumstances, a petition under 37 CFR 1.183 should be considered requesting waiver of . . . 37 CFR 1.64 that each of the actual inventors . . . execute the oath or declaration . . .).

2 37 CFR 1.48(a)(2).

3 37 CFR 1.48(a)(3).

(3) the $130 processing fee as required by 37 CFR 1.17(i);[4] and

(4) Assignee's written consent.[5]

The instant §1.48 request includes items (1) and (4) above.

With respect to item (2), the §1.48 request encloses a "Declaration/Power of Attorney for Patent Application" ("9/22/03 Declaration") signed by Carrick, Brorson, Holmstrom, but not Frankfort or Talmadge.

Asserting that Frankfort and Talmadge refuse to sign the declaration or cannot be found,[6] the accompanying §1.183 petition requests that the requirement under 37 CFR 1.48(a)(3), and, accordingly, 37 CFR 1.64(a),[7] be waived. Given that Assignee (Tellabs Operations, Inc.) has consented to adding Holmstrom to this application as an inventor, the §1.183 petition is hereby **granted**, and the 9/22/03 Declaration accepted.[8]

However, the §1.48 request does not include the $130 processing fee required by 37 CFR 1.17(i) (item (3)),[9] nor is there any general authorization for the USPTO to charge such a fee to a deposit account. The §1.48 request is thus **dismissed**.

---

4 37 CFR 1.48(a)(4).

5 37 CFR 1.48(a)(5).

6 Petition, page 2, 4th & 5th lines from bottom.

7 An application oath/declaration, including a supplemental oath/declaration, must be signed by all of the actual inventors.

8 See MPEP 201.03 37 CFR 1.48(a) (B) Oath or Declaration (Rev. 1, Feb. 2003) (**Absent** assignee consent, the petition under 37 CFR 1.183 requesting waiver of the re-execution of the oath or declaration **will be evaluated** as to **whether** the non-signing inventor was actually given the opportunity to re-execute the oath or declaration, **or whether** the non-signing inventor could not be reached.) (emphasis added).

9 The petition encloses a $130 fee for the 37 CFR 1.183 petition (waiver of signatures of Frankfort and Talmadge), while an additional $130 processing fee for the §1.48 request (adding Holmstrom) is missing. See MPEP 201.03, 37 CFR 1.48(a) (C) Fee (Rev. 1, Feb. 2003) (Where waiver under 37 CFR 1.183 is requested in relation to a requirement under 37 CFR 1.48(a), a processing fee under 37 CFR 1.48(a) **and** a petition fee under 37 CFR 1.183 are required.) (emphasis added).

A renewed §1.48 request, accompanied by the $130 processing fee,[10] must be filed within **TWO MONTHS** of the mailing date of this petition, and should be addressed to:

Commissioner for Patents, USPTO
Attn: Office of Petitions
Crystal Plaza Four, Suite CP4-3C23
2201 South Clark Place
Arlington, VA 22202

Extensions of time under 37 CFR 1.136(a) are available.

Telephone inquiries should be directed to the undersigned at (703) 308-0763.

RC Tang
Petitions Attorney
Office of Petitions

---

[10] The information submitted with the instant petition and request **does not** need to be re-submitted.

UNITED STATES PATENT AND TRADEMARK OFFICE

Commissioner for Patents
United States Patent and Trademark Office
P.O. Box 1450
Alexandria, VA 22313-1450

Paper No. 17

DAVIS & ASSOCIATES
PO BOX 1093
DRIPPING SPRINGS, TX 78620

COPY MAILED
APR 2 6 2004
OFFICE OF PETITIONS

In re Application of
Carrick et al.
Application No. 09/567,576
Filed: May 10, 2000
Attorney Docket No. 74035.P0002

ON PETITION

This decision concerns the March 2, 2004 "Renewed Request to Correct Inventorship" which is being properly treated as a renewed request under 37 CFR 1.48 to add an inventor.

The request is **GRANTED.**

The previous §1.48 request was dismissed for lacking the requisite $130 processing fee.[1]

The instant renewed request encloses the $130 processing fee and is thus granted.

The application file is being forwarded to the Office of Initial Patent Examination for further processing, including mailing of a revised filing receipt reflecting the new inventorship.[2] Thereafter, the file will be returned to Technology Center 2600 to await a response to the February 17, 2004 final Office Action.

Telephone inquiries concerning this decision should be directed to the undersigned at (703) 308-0763.

RC Tang
Petitions Attorney
Office of Petitions

---

1 See MPEP 201.03 (37 CFR 1.48(a)(C) Fee) (Rev. 1, Feb. 2003) (Where waiver under 37 CFR 1.183 is requested in relation to a requirement under 37 CFR 1.48(a), **a processing fee under 37 CFR 1.48(a) and a petition fee under 37 CFR 1.183 are required . . . If the processing fee has not been submitted or authorized the [§1.48] request will be dismissed**.).

2 MPEP 201.03 (Rev. 1, Feb. 2003).

UNITED STATES
PATENT AND
TRADEMARK OFFICE

UNDER SECRETARY OF COMMERCE FOR INTELLECTUAL PROPERTY AND
DIRECTOR OF THE UNITED STATES PATENT AND TRADEMARK OFFICE
WASHINGTON, D.C. 20231
WWW.USPTO.GOV

AUG 20 2002

#10

ROBERT G. MCMORROW, JR.
CONNOLLY BOVE LODGE AMD HUTZ LLP
1220 MARKET STREET
WILMINGTON, DE 19899

In re Application of	:
PHILIPPE BOUDEC et al.	:
Serial No.: 09/567,615	: Decision on Petition
Filing Date: 10 May 2000	:
Attorney Docket No. PH97072G1	:

This letter is in response to the Petition under 37 CFR 1.183, filed 25 September 2001, for partial waiver of requirement for sequence listing, which has just now been forwarded to the deciding official. The delay in acting on this petition is regretted.

BACKGROUND

This application was filed on 10 May 2000 under 35 USC 111(a). Since no claim has been made for priority under 35 USC 119 or 120, the effective filing date of this application is 10 May 2000.

In Paper No. 6, mailed 29 August 2001, the Office noted that the application disclosed nucleic or amino acid sequences encompassed by the definition set forth in 37 CFR 1.821(a)(1) and (a)(2) and gave Applicants 30 days within which to comply with the Sequence Rules, 37 CFR 1.821-1.825.

In Paper No. 8, filed 25 September 2001, Applicants submitted (1) a sequence listing with five nucleic acid sequences, (2) a computer readable form of the sequence listing and (3) a letter stating that (1) and (2) are the same and contain no new matter. Concurrently Applicants filed this petition.

DISCUSSION

The invention is directed to polypeptides. As in this application, the structural features of polypeptides are typically characterized by the sequence, amino terminal to carboxyl

terminal of the amino acid residues that define the polypeptide. To date, a vast number of protein sequences have been identified and this wealth of information is stored in computer databases, which are searched by computer queries. In view of this huge volume of information, manual sequence searches are simply not feasible.

With this current state of the technology in mind, the application, file history and petition have been considered carefully. The petition presents three points that will be addressed in turn.

The petition requested that the sequence disclosed in Figure 1 be excused from the sequence listing as follows:

(i) The sequences shown in Figure 1 are prior art sequences, identified in the application by previously assigned accession number. (Page 7, lines 3-13)

(ii) The prior art sequences are not being claimed in application as such.

(iii) If any of the sequences need to be searched, applicants suggest that they could be searched based upon the accession provided in specification.

(iv) Formatting the sequences would be an added unnecessary expense for applicants.

Each will be addressed in turn.

First, a review of Figure 1 and the specification shows an alignment of 9 hydroxyphenylpyruvate dioxygenase (HPPD) amino acid sequences isolated from different organisms. The sequences are several hundred amino acid residues in length.

The first line of the specification recites that the:

> "present invention relates to a nucleic acid sequence encoding chimeric hydroxyphenylpyruvate dioxygenase (HPPD), a chimeric gene comprising this sequence as encoding sequence..."

Page 7, lines 3-13 of the specification discusses the alignment of a plurality of HPPD sequences isolated from various species and referencing various Genebank [sic, GenBank] accession numbers.

The sequence rules 37 CFR 1.821-1.825 apply to any and all amino acid sequences in the disclosure meeting the criteria of unbranched sequences of four or more specifically defined amino acids, for applications filed after 1 October 1990. The sequence rules do not excuse sequences obtained from the prior art. This application has an effective filing date of after 1 October 1990 and contained unbranched sequences of four or more amino acids. For these reasons, applicants' first argument is deemed not persuasive.

Second, applicants argue the sequences are not claimed in the application as such. This is not persuasive for the following reasons:

Nothing in the sequence rules exempts sequences not recited in the claims. Even if the sequence rules presented such an exemption, in this application, the claims rely upon the sequences in Figure 1.

Claim 1 recites:

> Chimeric HPPD comprising the N-terminal portion of a first HPPD in combination with the C-terminal portion of a second HPPD.

Dependent claims specify that the first or second HPPD be derived from the various organisms recited in Figure 1. Figure 1 provides the structure of the proteins used to make to chimeric HPPD proteins recited in Claim 1. Dependent claims specifically refer to HPPD proteins isolated from the same organisms as recited in Figure 1. A complete search of claim 6, for example, will require a search of the *Pseudomonas fluorescense* HPPD amino acid sequence depicted in Figure 1. While particular sequences are not recited in the claims, the claimed subject matter encompasses the sequences in Figure 1. As such, a computer readable form of the sequences in Figure 1 is required for performing an adequate search of the elected invention.

Third, applicants argue that if any of the sequences need to be searched, they can be searched based on their accession numbers provided in the specification. This is not persuasive for three reasons.

(a) Sequence databases contain information that may altered over time. Nothing prevents the researcher who, for example, contributed the *Daucus carota* HPPD amino acid sequence to GenBank (Accession Number DCU 87257) prior to this application's filing date to make changes to that sequence at any point in time. Note that the researcher who submits a sequence to GenBank is not necessarily the same person as the inventor submitting an application to the USPTO. The subsequently amended version of this researcher's *Daucus carota* HPPD amino acid sequence will be given the same Accession Number as his first contribution. Moreover, prior versions of the sequence are removed from the database when a sequence is updated. In short, GenBank's DCU 87257 Accession number may not be the same today as it was when this application was filed. As such, a search of amino acid databases performed today using the latest version of DCU 87257 may be relying upon new matter added to the specification after the filing date.

(b) The USPTO maintains their own sequence databases and performs sequence searches on both in-house and publicly available databases. These computer searches require intensive computer resources and are performed at considerable expense to the Office. When an application is not in compliance with the sequence requirements (i.e., due to a pre-October 1990 filing date), the sequence query becomes more involved. In order to "search the first amino acid sequence recited in Figure 1 on all amino acid databases," the Office must perform extensive manual labor entering, by hand, the

sequence into the database before the search can be performed. Any search performed using an accession number also this involves considerable effort on the part of the Office in pulling up the accession number and using this as query for the databases. Each time the search needs to be updated (first action on the merits; final action, at time of allowance, etc), the Office would need to expend resources repeating the tedious task of pulling the sequence by accession number. Note that only sequences given SEQ ID Nos. are stored on the Office's in-house database. Further note, that at each time the accession number is used in a query, the Office has no guarantee from the database owner that the sequence had not been updated or altered by the researcher. If the sequence was updated the USPTO would have no way to search the earlier form disclosed in the specification, since out-of-date forms of the sequence are typically removed from the database. Finally, the USPTO does not have sufficient resources to compare the disclosed sequence to that deposited one, either by

(1) computer sequence alignment (which prerequisites tedious, error-prone, manual entry of the disclosed sequence by the Office) or

(2) time-consuming, error-prone "eye-ball" method of comparing paper copies of the sequences.

(d) Applicants argue that complying with the sequence requirements would present applicants with an unnecessary added expense. This argument is not persuasive in view of the fact that Office does not have sufficient resources to expend, in terms of computer resources and manual labor that the Office would need to spend to search and examine this application, as outlined in (b) and (c) above. Every other applicant disclosing sequences in their application is required to accept the financial implications involved with complying with the sequence rules.

In order to reduce the burden of complying with the sequence rules, the USPTO has made available for free downing on the Office World Wide Web (www.uspto.gov) the electronic program PatentIn Version 3.1 and its Companion User's Manual. See MPEP 2430 for additional information.

Finally, it is noted that should this application go on to issue as a patent without complying with the sequence requirements, the USPTO would not be able to identify this sequence when searching the USPTO sequence database. As such, this patent may not be identified for use as a reference under 35 U.S.C. 102 or 35 U.S.C. 103 against subsequent filed applications. Surely this is a situation that applicants would wish to avoid.

DECISION

The petition is **DENIED** for the reasons set forth above.

The reply filed 25 September 2001 is not fully responsive to the Office communication mailed 29 August 2001 for the reasons set below:

Sequences in Figure 1 and on pages 23-24 of are not identified with SEQ ID Nos., as required by 37 CFR 1.821(d). Also, the sequence listing does not include the amino acid sequences shown in Figure 1.

In addition to the required amendment to pages 23-24 of the specification and to either (1) the Brief Description of the Drawings or (2) Figure 1, Applicants need to submit a new computer readable form of the sequence listing, a new paper copy of the sequence listing and a new letter stating that the two copies are the same and contain no new matter. The sequence listing shall include the amino acid sequences listed in Figure 1.

Since the above mentioned reply appears to be bona fide, applicant is given a TIME PERIOD of ONE (1) MONTH or THIRTY (30) DAYS form the mailing date of this notice, whichever is longer, within which to supply the omission or correction in order to avoid abandonment. EXTENSIONS OF THIS TIME PERIOD MAY BE GRANTED UNDER 37 CFR 1.136(a).

Any request for reconsideration of this decision must be by way of a renewed petition and must be filed within TWO MONTHS of the date of mailing of this decision in order to be considered timely.

Should there be any questions with regard to this letter, please contact Special Program Examiner Julie Burke by letter addressed to the Director, Technology Center 1600, Washington DC 20231 or by telephone at (703) 308-7553 or by facsimile transmission at (7030 308-7230.

Bruce Kisliuk
TC1600 Group Director

Notice t Comply	Application No.	Applicant(s)
	09/567,615	BOUDEC ET AL.
	Examiner	Art Unit
	David H Kruse	1638

NOTICE TO COMPLY WITH REQUIREMENTS FOR PATENT APPLICATIONS CONTAINING NUCLEOTIDE SEQUENCE AND/OR AMINO ACID SEQUENCE DISCLOSURES

Applicant must file the items indicated below within the time period set the Office action to which the Notice is attached to avoid aband nment under 35 U.S.C. § 133 (extensions of time may be obtained under the provisions of 37 CFR 1.136(a)).

The nucleotide and/or amino acid sequence disclosure contained in this application does not comply with the requirements for such a disclosure as set forth in 37 C.F.R. 1.821 - 1.825 for the following reason(s):

☒ 1. This application clearly fails to comply with the requirements of 37 C.F.R. 1.821-1.825. Applicant's attention is directed to the final rulemaking notice published at 55 FR 18230 (May 1, 1990), and 1114 OG 29 (May 15, 1990). If the effective filing date is on or after July 1, 1998, see the final rulemaking notice published at 63 FR 29620 (June 1, 1998) and 1211 OG 82 (June 23, 1998).

☒ 2. This application does not contain, as a separate part of the disclosure on paper copy, a "Sequence Listing" as required by 37 C.F.R. 1.821(c).

☒ 3. A copy of the "Sequence Listing" in computer readable form has not been submitted as required by 37 C.F.R. 1.821(e).

☐ 4. A copy of the "Sequence Listing" in computer readable form has been submitted. However, the content of the computer readable form does not comply with the requirements of 37 C.F.R. 1.822 and/or 1.823, as indicated n the attached copy of the marked -up "Raw Sequence Listing."

☐ 5. The computer readable form that has been filed with this application has been found to be damaged and/or unreadable as indicated on the attached CRF Diskette Problem Report. A Substitute computer readable form must be submitted as required by 37 C.F.R. 1.825(d).

☐ 6. The paper copy of the "Sequence Listing" is not the same as the computer readable from of the "Sequence Listing" as required by 37 C.F.R. 1.821(e).

☒ 7. Oth r: Seq ID No Required in Figure 1 or in Brief Description of Figure 1 and on pages 23-24 of specification.

Applicant Must Provide:

☒ An initial or substitute computer readable form (CRF) copy of the "Sequence Listing".

☒ An initial or substitute paper copy of the "Sequence Listing", as well as an amendment directing its entry into the specification.

☒ A statement that the content of the paper and computer readable copies are the same and, where applicable, include no new matter, as required by 37 C.F.R. 1.821(e) or 1.821(f) or 1.821(g) or 1.825(b) or 1.825(d).

For questions regarding compliance to these requirements, please contact:

For Rules Interpretation, call (703) 308-4216
For CRF Submission Help, call (703) 308-4212
PatentIn Software Program Support
Technical Assistance.....703-287-0200
To Purchase PatentIn Software.....703-306-2600

PLEASE RETURN A COPY OF THIS NOTICE WITH YOUR REPLY

Received from < > at 7/9/02 11:14:35 AM [Eastern Daylight Time]

UNITED STATES PATENT AND TRADEMARK OFFICE

COMMISSIONER FOR PATENT
UNITED STATES PATENT AND TRADEMARK OFFIC
WASHINGTON, D.C. 2023
www.uspto.go

JJGJr.:01-03

Paper 11

HUGH R. KRESS
2400 BANK ONE CENTER
910 TRAVIS STREET
HOUSTON TX 77002

COPY MAILED

JAN 1 4 2003

OFFICE OF PETITIONS

In re Application of
Batra :
Application No. 09/567,673 : ON PETITION
Filed: 9 May, 2000 :
Attorney Docket No.: 23804-P046US :

This is a decision on the petition filed on 25 September, 2002, to revive under 37 C.F.R. §1.137(a),[1] and in light of the allegations considered as a petition to withdraw the holding of abandonment under 37 C.F.R. §1.181.[2]

---

[1] A Petition filed under the provisions of 37 C.F.R. §1.137(a) must be accompanied by:
(1) The required reply, unless previously filed. In a nonprovisional application abandoned for failure to prosecute, the required reply may be met by the filing of a continuing application. In an application for patent, abandoned or lapsed for failure to pay the issue fee or any portion thereof, the required reply must be the payment of the issue fee or any outstanding balance thereof;
(2) the petition fee required by 37 C.F.R. §1.17(l);
(3) A showing to the satisfaction of the Commissioner that the entire delay in filing the required reply from the reply due date until the filing of a grantable petition pursuant to the is paragraph was unavoidable; and
(4) Any terminal disclaimer (and fee set forth in 37 C.F.R. §1.20(d)) required pursuant to 37 C.F.R. §1.137(c).

An application is "unavoidably" abandoned only where Petitioner (or Petitioner's counsel) takes all action necessary for a proper response to the outstanding Office action, but through the intervention of unforeseen circumstances, the response is not timely received in the Office. That is, in the context of ordinary human affairs the test is such care as is generally used and observed by prudent and careful persons in relation to their most important business. Ex parte Pratt, 1887 Dec. Comm'r Pat. 31 (Comm'r Pat. 1887); Ex parte Henrich, 1913 Dec. Comm'r Pat. 139, 141 (Comm'r. Pat. 1913).

[2] The regulations at 37 C.F.R. §1.181 provide, in pertinent part:
§1.181 Petition to the Commissioner.
(a) Petition may be taken to the Commissioner: (1) From any action or requirement of any examiner in the *ex parte* prosecution of an application which is not subject to appeal to the Board of Patent Appeals and Interferences or to the court; (2) In cases in which a statute or the rules specify that the matter is to be determined directly by or reviewed by the Commissioner; and (3) To invoke the supervisory authority of the Commissioner in appropriate circumstances. * * *
(b) Any such petition must contain a statement of the facts involved and the point or points to be reviewed and the action requested. Brief or memoranda, if any, in support thereof should accompany or be embodied in the petition; and where facts are to be proven, the proof in the form of affidavits or declaration (and exhibits, if any) must accompany the petition.
© When a petition is taken from an action or requirement of an examiner in the *ex parte* prosecution of an application, it may be required that there have been a proper request for reconsideration (§1.111) and a repeated action by the examiner. The examiner may be directed by the Commissioner to furnish a written statement, within a specified time, setting forth the reasons for his decision upon the matters averred in the petition, supplying a copy thereof to the petitioner.
(d) Where a fee is required for a petition to the Commissioner the appropriate section of this part will so indicate. If any required fee does not accompany the petition, the petition will be dismissed. * * *
(f) Except as otherwise provided in these rules, any such petition not filed within 2 months from the action complained of, may be dismissed as untimely. The mere filing of a petition will not stay the period for reply to an Examiner's action which may be running against an application, nor act as a stay of other proceedings. * * *

The Office regrets the delay in addressing this matter.

For the reasons set forth below:

- the petition considered under 37 C.F.R. §1.181 to withdraw the holding of abandonment is **GRANTED**; and

- the petition under 37 C.F.R. §1.137(a) is **DISMISSED as moot**.

BACKGROUND

A review of the record reveals:

- it appeared that the Applicant/Petitioner (Petitioner) failed to respond timely to the non-final Office action mailed on 28 September, 2001, and due (absent extension of time) on or before 28 December, 2001;

- the instant matter was deemed abandoned after midnight 28 December, 2001;

- Notice of Abandonment was mailed on 28 June, 2002;

- on 25 September, 2002, contemporaneously with the filing of the instant petition (and fee), Petitioner submitted, *inter alia*:

  --a Terminal Disclaimer (and fee); and

  --a statement/narrative (included in the petition) of Petitioner's (Hugh Kress, Agent (Reg. No. 36,574)) understanding of events herein;

- Petitioner filed a Notice of Change of Address on 23 July, 2001 (which was confirmed via FAX under Customer Number 34,617 on 13 January, 2003), more than two months before the non-final Office action at issue herein;

- for reasons unclear from the file, the Office database specified a wholly different (and erroneous) address for Petitioner, which error now has been corrected; and

- the non-final Office action at issue herein was mailed to an incorrect address.

The courts have determined the construct for properly supporting a petition seeking withdrawal of a holding of abandonment.[3]

CONCLUSION

Therefore , the petition considered under 37 C.F.R. §1.181 to withdraw the holding of abandonment is **granted**.

Accordingly, the holding of Abandonment is withdrawn, the Notice of Abandonment of 28 June, 2002, was mailed in error and is vacated, and the petition fee is waived.[4]

Thus, the petition under 37 C.F.R. §1.137(a) is **dismissed as moot**.

A copy of the 28 September, 2001, non-final Office action at issue herein is enclosed and Petitioner has three (3) months from the mail date of this decision within which to respond.

This application is being forwarded to Technology Center 2800 for further processing.

Telephone inquiries regarding this decision may be directed to the undersigned at (703) 305-9199.

John J. Gillon, Jr.
Senior Attorney
Office of Petitions
Office of the Deputy Commissioner
for Patent Examination Policy

Encl.: A copy of the 28 September, 2001, non-final Office action

---

[3] See: Delgar v. Schulver. 172 USPQ 513 (D.D.C. 1971).

[4] The petition fee ($110.00), although authorized was not charged. Pursuant to Petitioner's authorization, the Terminal Disclaimer fee ($110.00) is being refunded to Deposit Account 23-2426.

UNITED STATES PATENT AND TRADEMARK OFFICE

Commissioner for Patents
United States Patent and Trademark Office
Washington, D.C. 20231
www.uspto.gov

Paper No. 5

MAIL

DEC 17 2001

DIRECTOR OFFICE
TECHNOLOGY CENTER 2600

Glenn Patent Group
3475 Edison Way
Suite L
Menlo Park, CA 94025

In re Application of
Yang, et al.
Application No.: 09/567,786
Filed: May 9, 2000
For: MULTIPLE SAMPLING VIA A TIME-INDEXED METHOD TO ACHIEVE WIDE DYNAMIC RANGES

DECISION ON PETITION
TO MAKE SPECIAL

This is a decision on the petition to treat the above-identified application as special and advance the examination thereof, under 37 C.F.R. § 1.102 and, though petitioner has not specified, it appears petitioner requests review under M.P.E.P. § 708.02(VIII), filed November 10, 2000.

A grantable petition to make special under 37 C.F.R. § 1.102 and in accordance with M.P.E.P. § 708.02, Item VIII, must be accompanied by (a) the fee set forth in 37 C.F.R. § 1.17(I), (b) a statement that all claims are directed to a single invention or an offer to make an oral election without traverse should the Patent and Trademark Office hold that the claims are not directed to a single invention, (c) a statement that a pre-examination search has been made by the inventor, attorney, agent, professional searcher, etc., and a listing of the field of search by class and subclass, (d) one copy of each of the references deemed most closely related to the subject matter encompassed by the claims, and (e) a detailed description of the submitted references and discussions pointing out how the claimed subject matter is distinguishable over these references.

The petition lacks requirements (a) and (b). The petition does not include the required $130.00 fee, nor does it include an authorization to charge a deposit account for the fee. Furthermore, the petition does not include a statement that all claims are directed to a single invention or agreeing to make an election without traverse.

For the above stated reasons, the petition is **DENIED**.

Should applicant desire reconsideration, he or she should supplement this petition by including the required fee and information as outlined above.

Any request for reconsideration must be filed within **TWO MONTHS** from the date of this decision.

The application file will be forwarded to the Technology Center's Central Files and will await action in its regular turn.

Kenneth A. Wieder
Special Program Examiner
Technology Center 2600
Communications
(703) 305-4710

02-04-02

$ DAE ?
#6
BA 2/13/02

OIPE JC11
FEB 0 1 2002
PATENT & TRADEMARK OFFICE

Express Mail mailing label no. EL539749218US
Date of Deposit: February 1, 2002
I hereby certify that this paper or fee is being deposited with the United States Postal Service "Express Mail Post Office to Addressee" service under 37 CFR 1.10 on the date indicated above and is addressed to the Commissioner of Patents and Trademarks, Washington, D. C. 20231.

Jessica Pallach

RECEIVED
FEB 1 2 2002
Technology Center 2600

IN THE UNITED STATES PATENT AND TRADEMARK OFFICE

In re application of: Yang et al. **Docket No.:** PIXI0001
Serial No: 09/567,786 **Art Unit:** Unassigned
Filed: May 9, 2000 **Examiner:** Unassigned
Title: MULTIPLE SAMPLING VIA A TIME-INDEXED METHOD TO ACHIEVE WIDE DYNAMIC RANGES

RECEIVED
FEB 0 8 2002
OFFICE OF PETITIONS
DEPUTY A/C PATENTS

February 1, 2002

Commissioner of Patents and Trademarks
BOX DAC
Washington DC 20231

RECEIVED
MAR 5 - 2002
DIRECTOR OFFICE
TECHNOLOGY CENTER 2600

REQUEST FOR RECONSIDERATION OF PETITION DECISION

Sir:

This is in response to the Denied Petition to Make Special dated 17 December 2001 for the above-referenced patent application.

1. Please charge the Petition fee of #130.00, as well as any additional fees to our deposit account no. 07-1445.

2. The Applicant offers to make an oral election without traverse should the Patent and Trademark Office hold that the claims are not directed to a single invention.

Respectfully Submitted,

02/06/2002 SLUANG1 00000017 071445 09567786
01 FC:122 130.00 CH

Michael A. Glenn
Reg. No. 30,176

650-474-8400

Customer No. 22862

UNITED STATES PATENT AND TRADEMARK OFFICE

COMMISSIONER FOR PATENTS
UNITED STATES PATENT AND TRADEMARK OFFICE
WASHINGTON, D.C. 20231
www.uspto.gov

Paper No. 7

Glenn Patent Group
3475 Edison Way
Suite L
Menlo Park, CA 94025

MAIL

APR - 4 2002

DIRECTOR OFFICE
TECHNOLOGY CENTER 2600

In re Application of :
Yang, et al. :
Application No.: 09/567,786 :
Filed: May 9, 2000 :
For: MULTIPLE SAMPLING VIA A TIME- :
INDEXED METHOD TO ACHIEVE WIDE :
DYNAMIC RANGES

DECISION ON PETITION
TO MAKE SPECIAL

This is a decision on the renewed petition, filed February 1, 2002 to treat the above-identified application as special and advance the examination thereof, under 37 C.F.R. § 1.102 and, though petitioner has not specified, it appears petitioner requests review under M.P.E.P. § 708.02(VIII),

The requirements for a petition to make special under M.P.E.P. § 708.02(VIII) have now been met.

For the above stated reasons, the petition is **GRANTED**.

The application will retain its special status throughout its entire course of prosecution in the Patent and Trademark Office, including appeal, if any to the Board of Patent Appeals and Interferences, subject only to diligent prosecution by the applicant.

The application file will be forwarded to the examiner for expedited prosecution.

Kenneth A. Wieder
Special Program Examiner
Technology Center 2600
Communications
(703) 305-4710

UNITED STATES PATENT AND TRADEMARK OFFICE

COMMISSIONER FOR PATENTS
UNITED STATES PATENT AND TRADEMARK OFFICE
WASHINGTON, D.C. 20231
www.uspto.gov

Paper No. 15

TOWNSEND & TOWNSEND & CREW
TWO EMBARCADERO CENTER
8TH FLOOR
SAN FRANCISCO, CA 94111-3834

COPY MAILED

MAR - 4 2002

OFFICE OF PETITIONS

In re Application of :
Shu-Gui Huang et al :
Application No. 09/567,856 :
Filed: May 9, 2000 :
Attorney Docket No. 018781-001610US :

LETTER

This is in response to the paper filed January 4, 2002 under 37 CFR 1.27(c) seeking status as a small entity. The letter mailed January 29, 2002 is vacated.

The Verified Statement Claiming Small Entity Status of January 4, 2002 has been made of record and small entity status has been accorded.

The application file is being forwarded to Technology Center AU 1636.

Wan Laymon
Petitions Examiner
Office of Petitions
Office of the Deputy Commissioner
for Patent Examination Policy

UNITED STATES PATENT AND TRADEMARK OFFICE

COMMISSIONER FOR PATENTS
UNITED STATES PATENT AND TRADEMARK OFFICE
P.O. BOX 1450
ALEXANDRIA, VA 22313-1450
www.uspto.gov

MORGAN, LEWIS & BOCKIUS LLP (SF)
2 PALO ALTO SQUARE
3000 El Camino Real, Suite 700
PALO ALTO CA 94306

COPY MAILED

JAN 19 2006

OFFICE OF PETITIONS

In re Application of
Cook et al.
Application No. 09/567,863
Filed: May 9, 2000
Attorney Docket No. 061873-5004US
For: DARK QUENCHERS FOR DONOR-ACCEPTOR ENERGY TRANSFER

: Decision on Petition for
: Patent Term Extension

The above-identified application has been forwarded to the undersigned for consideration on the "Petition For Patent Term Extension Under 37 CFR 1.181" received on June 9, 2005, for an extension of the patent term for 184 days due to delays in the Office for a suspension for a potential interference. The petition is being treated under 37 CFR 1.182, since 37 CFR 1.701 does not provide for patent term extension where an interference is not declared.

The petition under 37 CFR 1.181 and 37 CFR 1.182 is dismissed.

Petitioner notes that the above-identified application was filed on May 9, 2000 and allowed on May 16, 2005, but issuance was delayed due to a suspension in prosecution for a potential interference. Petitioner states that the application was suspended for a potential interference on February 6, 2004. Petitioner states that while he was not informed the suspension was ended by a Withdrawal of Suspension Notice, the PAIR screen indicates that the suspension ended on August 8, 2004.

Petitioner asserts that prosecution in the application was suspended from February 6, 2004, the date of the mailing of the Notice of Suspension until August 8, 2004, the date the suspension was terminated. Petitioner asserts that under 37 CFR 1.701(c)(1)(ii), the patent term should be extended for 184 days. Petitioner further asserts that according to MPEP 2720, no fee is due because petitions filed under the PTE provisions do not require a fee.

35 U.S.C. § 154(b)(as amended by the "Uruguay Round Agreements Act," enacted December 8, 1994, as part of Public Law 103-465) provides for patent term extension for appellate review, interference and secrecy order delays in applications filed on or after June 8, 1995 and before May 29, 2000. 35 U.S.C. § 154(b)(as amended by the "American Inventors Protection Act of 1999," enacted November 29, 1999, as part of Public Law 106-113) provides for patent term adjustment for these administrative delays and others in applications filed on or after May 29, 2000. The patent statute only permits extension of patent term based on very specific criteria. The Office has no authority to grant any extension or adjustment of the term due to administrative delays except as authorized by 35 U.S.C. § 154.

The above-identified application was filed on May 9, 2000. Accordingly it is entitled to patent term extension based upon the conditions in 35 U.S.C. § 154(b), in effect on June 8, 1995. The provisions of 35 U.S.C. § 154(b) in effect on May 29, 2000 do not apply, because the amended version of 35 U.S.C. § 154(b) only applies to applications filed on or after May 29, 2000. Pursuant to 35 U.S.C. § 154(b), in effect on June 8, 1995, an applicant can receive patent term extension only if there was an appellate review, interference or a secrecy order delays as set forth in the statute. While petitioner argues that patent term extension should be awarded to the above identified application, both 35 U.S.C. 154(b) and 37 CFR 1.701(c)(1) require an interference proceeding under 35 U.S.C. 135(a) to be eligible for patent term extension.

Petitioner argues that under 37 CFR 1.701(c)(1)(ii); the patent term extension should be 184 days for the delay due to the suspension in prosecution due to the interference. While prosecution in the application was suspended, the suspension was due to potential interference with applicants' application with other application(s), not to await the result of an interference in another application. As a result, the provisions of 37 CFR 1.701(c)(1)(ii) do not apply. The provisions of 37 CFR 1.701(c)(1)(ii) apply to suspensions by the Office due to interference proceedings under 35 U.S.C. 135(a), however, in this instance there was no interference proceeding. Therefore, petitioners' argument that he is entitled to patent term extension for the period of suspension under 37 CFR 1.701 is not persuasive.

With respect to Petitioner's argument that no fee is due for this petition because the provisions of 37 CFR 1.701 do not provide for a petition fee, petitioner's arguments are not based on 37 CFR 1.701. Petitioner's arguments are based on grounds that are not in the rules, thus this petition is properly treated as a petition under 37 CFR 1.182. Petitions under 37 CFR 1.182 require a petition fee.

The delay in issuance of petitioner's application is regretted. However, the Office has no authority to grant an extension or adjustment of the term due to administrative delays except as authorized by 35 U.S.C. § 154(b).

After mailing of this decision, the above-identified application will be returned to the Office of Publications.

The rules and statutory provisions governing the operations of the U.S. Patent and Trademark Office require payment of a fee on filing each petition. *See* 35 U.S.C. § 41(a)(7). Accordingly, as authorized, the required $400 fee for the petition under 37 CFR 1.182 has been charged to petitioner's Deposit Account (50-0310).

Telephone inquiries with regard to this communication should be directed to Mark O. Polutta at (571) 272-7709.

Mark O. Polutta
Senior Legal Advisor
Office of Patent Legal Administration
Office of the Deputy Commissioner
for Patent Examination Policy

SPE RESPONSE FOR CERTIFICATE OF CORRECTION

Paper No.: _____

DATE : 01/16/09

TO SPE OF : ART UNIT 1637

SUBJECT : Request for Certificate of Correction for Appl. No.: 09567863 Patent No.: 7019129 B1

Please respond to this request for a certificate of correction within 7 days.

FOR IFW FILES:

Please review the requested changes/corrections as shown in the **COCIN** document(s) in the IFW application image. No new matter should be introduced, nor should the scope or meaning of the claims be changed.

Please complete the response (see below) and forward the completed response to scanning using document code **COCX**.

FOR PAPER FILES:

Please review the requested changes/corrections as shown in the attached certificate of correction. Please complete this form (see below) and forward it with the file to:

Certificates of Correction Branch (CofC)
South Tower - 9A22
Palm Location 7580
You can fax the Directors/SPE response to 571-270-9990

_____
Certificates of Correction Branch
703-308-9390 ext. _____

Thank You For Your Assistance

The request for issuing the above-identified correction(s) is hereby:
Note your decision on the appropriate box.

xApproved	**All** changes apply.
☐ **Approved in Part**	Specify below which changes **do not** apply.
☐ **Denied**	State the reasons for denial below.

Comments: _____

/Gary Benzion/ SPE AU 1637

SPE **Art Unit**

UNITED STATES PATENT AND TRADEMARK OFFICE

COMMISSIONER FOR PATENTS
UNITED STATES PATENT AND TRADEMARK OFFICE
WASHINGTON, D.C. 20231
www.uspto.gov

Paper No. 8

RICHARD C STEWART II
CHAMPION INTERNATIONAL CORPORATION
ONE CHAMPION PLAZA
STAMFORD, CT 06921

COPY MAILED

APR 1 7 2003

OFFICE OF PETITIONS

In re Application of	:	
Sen Yang, et al.	:	
Application No. 09/567,920	:	ON PETITION
Filed: May 10, 2000	:	
Attorney Docket No. PO135 CIP	:	

This is a decision on the petition under 37 CFR 1.137(b), filed March 31, 2003, to revive the above-identified application.

The petition is **GRANTED**.

The above-identified application became abandoned for failure to reply in a timely manner to the non-final Office action mailed September 24, 2001, which set a shortened statutory period for reply of three (3) months. No extensions of time under the provisions of 37 CFR 1.136(a) were obtained. Accordingly, the application became abandoned on December 26, 2001.

37 CFR 1.137(b)(3) requires a statement that the entire delay in filing the required reply from the due date for the reply until the filing of a grantable petition pursuant to 37 CFR 1.137(b) was unintentional. If the statement contained in the instant petition varies from the language required by 37 CFR 1.137(b)(3), it will be interpreted as the required statement. Petitioner must notify the Office if this is **not** a correct interpretation of the statement contained in the instant petition.

The file does not indicate a change of address has been submitted, although the address given on the petition differs from the address of record. If appropriate, a change of address should be filed in accordance with MPEP 601.03. A courtesy copy of this decision is being mailed to the address given on the petition; however, the Office will mail future correspondence solely to the address of record.

Telephone inquiries concerning this decision should be directed to the undersigned at (703) 306-5594.

The application file is being forwarded to Technology Center 1700, Art Unit 1774 for further processing.

Retta Williams

Retta Williams
Petitions Examiner
Office of Petitions
Office of the Deputy Commissioner
for Patent Examination Policy

cc: Richard C. Stewart, II
International Paper Company
1422 Long Meadow Road
Tuxedo, NY 10987

UNITED STATES PATENT AND TRADEMARK OFFICE

Commissioner for Patents
United States Patent and Trademark Office
P.O. Box 1450
Alexandria, VA 22313-1450
www.uspto.go

PPG INDUSTRIES, INC
INTELLECTUAL PROPERTY DEPT.
ONE PPG PLACE
PITTSBURGH, PA 15272

COPY MAILED

AUG 1 9 2004

OFFICE OF PETITIONS

In re Application of	:	
Medwick et al.	:	
Application No. 09/567,934	:	ON PETITION
Filed: May 10, 2000	:	
Attorney Docket No. 1513A1/RC	:	

This is a decision on the petition under 37 C.F.R. § 1.137(b), filed August 5, 2004, to revive the above-identified application.

The petition is **GRANTED.**

This application became abandoned for failure to timely reply within three months to the final Office action mailed December 4, 2003. No extensions of time under the provisions of 37 CFR 1.136(a) were obtained. Accordingly, this application became abandoned on March 5, 2004. A Notice of Abandonment was mailed on July 13, 2004.

Petitioner has met the requirements to revive the above-identified application pursuant to 37 CFR 1.137(b).

This matter is now being referred to Technology Center 1700 for processing of the Request for Continued Examination under 37 CFR 1.114 filed with the instant petition.

Telephone inquiries should be directed to the undersigned at (703) 306-0482. Any telephone inquiries after September 28, 2004 should be directed to (571) 272-3282.

Liana Chase
Petitions Examiner
Office of Petitions
Office of the Deputy Commissioner
for Patent Examination Policy

SPE RESPONSE FOR CERTIFICATE OF CORRECTION

Paper No.:20080806

DATE : August 06, 2008

TO SPE OF : ART UNIT 2613

SUBJECT : Request for Certificate of Correction on Patent No.: 7,321,735

A response is requested with respect to the accompanying request for a certificate of correction.

Please complete this form and return with file, within **7** days to:
Certificates of Correction Branch - ST (South Tower) 9A22
Palm location **7590** - Tel. No. (703) 305-8309

With respect to the change(s) requested, correcting Office and/or Applicant's errors, should the patent read as shown in the certificate of correction? No new matter should be introduced, nor should the scope or meaning of the claims be changed.

Thank You For Your Assistance **Certificates of Correction Branch**

The request for issuing the above-identified correction(s) is hereby:

Note your decision on the appropriated box.

☒ **Approved** All changes apply.

☐ **Approved in Part** Specify below which changes **do not** apply.

☐ **Denied** State the reasons for denial below.

Comments:

/JASON CHAN/
Supervisory Patent Examiner.Art Unit 2613

UNITED STATES PATENT AND TRADEMARK OFFICE

Commissioner for Patents
United States Patent and Trademark Office
P.O. Box 1450
Alexandria, VA 22313-1450
www.uspto.gov

BROSEMER KOLEFAS & ASSOCIATES, LLC -(LUCENT)
1 BETHANY ROAD, BUILDING 4 - SUITE #58
HAZLET, NJ 07730

COPY MAILED

SEP 15 2005

OFFICE OF PETITIONS

In re Application of	:	
Xiaodong Li et al	:	
Application No. 09/568,170	:	ON PETITION
Filed: May 9, 2000	:	
Attorney Docket No. Li 3-5-10	:	

This is a decision on the petition under 37 CFR 1.137(b), filed August 22, 2005, to revive the above-identified application.

The petition is **GRANTED**.

The above-identified application became abandoned for failure to submit the issue fee in a timely manner in reply to the Notice of Allowance mailed April 20, 2005, which set a statutory period for reply of three (3) months. Accordingly, the above-identified application became abandoned on July 21, 2005.

Telephone inquiries concerning this decision should be directed to Wan Laymon at (571) 272-3220.

This matter is being referred to Publishing Division.

Wan Laymon

Wan Laymon
Petitions Examiner
Office of Petitions
Office of the Deputy Commissioner
for Patent Examination Policy

UNITED STATES PATENT AND TRADEMARK OFFICE

UNDER SECRETARY OF COMMERCE FOR INTELLECTUAL PROPERTY AND
DIRECTOR OF THE UNITED STATES PATENT AND TRADEMARK OFFICE
WASHINGTON, DC 20231
www.uspto.gov

SEP 14 2000

Paper No. 3

In re Application of
Kevin J. Aronin
Application No. 09/568,199
Filed: May 9, 2000
Attorney Docket No. 68075/18

: DECISION ON PETITION

This is a decision on the petition to make special filed on August 14, 2000.

The petition is dismissed.

The petition is based upon the existence of an actual infringement of the pending claims. The requirements for a petition to make special based upon an actual infringement are set forth at MPEP § 708.02(II), Seventh Edition, Rev. 1, February 2000. The requirements are:

1) That there is an infringing device or product actually on the market or method in use;
2) That a rigid comparison of the alleged infringing device, product or method with the claims of the application has been made, and that, in the opinion of petitioner, some of the claims are unquestionably infringed;
3) The petitioner has made or caused to be made a careful and thorough search of the prior art or has a good knowledge of the pertinent prior art;
4) That there has been provided by petitioner one copy of each of the references deemed most closely related to the subject matter encompassed by the claims if said references are not already of record; and
5) The petition is accompanied by payment of the fee under 37 CFR 1.17(i), currently $130.00.

The petition lacks items (3) and (4).

Petitioner may file a renewed petition, without additional fee, provided that the renewed petition is filed within two months of the date of this decision. See 37 CFR 1.181(f). The application is being returned to storage and will receive a first action in due course.

PETITION DISMISSED.

Stephen Marcus, Special Program Examiner
Patent Examining Groups 3710 and 3720

Anthony F. Lo Ciero, Esq.
Neal L. Rosenberg, Esq.
Amster, Rothstein & Ebenstein
90 Park Avenue
New York, NY 10016

UNITED STATES PATENT AND TRADEMARK OFFICE

UNDER SECRETARY OF COMMERCE FOR INTELLECTUAL PROPERTY AND
DIRECTOR OF THE UNITED STATES PATENT AND TRADEMARK OFFICE
WASHINGTON, DC 20231
www.uspto.gov

OCT 16 2000

Paper No. 6

In re Application of
Kevin J. Aronin
Application No. 09/568,199
Filed: May 9, 2000
Attorney Docket No. 68075/18

: DECISION ON
: RENEWED PETITION

This is a decision on the renewed petition to make special filed on September 29, 2000.

The renewed petition is granted.

The renewed petition is now accompanied by a statement that a careful and thorough search of the prior art has been made, and is also accompanied by one copy of the references deemed by petition to be most closely related to the subject matter encompassed by the claims. Petitioner is also advised that the Information Disclosure Statement filed on August 15, 2000 has now been associated with the application file.

Accordingly, the examiner will treat this application as special throughout its prosecution. Prior to the first action on the merits, the examiner will conduct a rigorous search for potentially interfering applications. The interference search will be brought up to date prior to each successive action.

The application is being forwarded to the Supervisory Patent Examiner of Patent Examining Art Unit 3713, who will forward the application to the examiner for action consistent with this Decision.

PETITION GRANTED.

Stephen Marcus, Special Program Examiner
Patent Examining Groups 3710 and 3720

Anthony F. Lo Ciero, Esq.
Neal L. Rosenberg, Esq.
Amster, Rothstein & Ebenstein
90 Park Avenue
New York, NY 10016

UNITED STATES PATENT AND TRADEMARK OFFICE

Commissioner for Patents
United States Patent and Trademark Office
Washington, D.C. 20231
www.uspto.gov

Paper No. 14

HARVEY B. JACOBSON, JR.
JACOBSON HOLMAN PLLC
400 SEVENTH STREET NW
WASHINGTON DC 20004

COPY MAILED

MAR 26 2002

OFFICE OF PETITIONS

In re Application of :
Holger Hoesel et al :
Application No. 09/568,227 : ON PETITION
Filed: May 8, 2000 :
Attorney Docket No. P67449S :

This is a decision on the petition under 37 CFR 1.137(b), filed March 12, 2002, to revive the above-identified application.

The petition is **granted**.

The petition indicates that an Associate Power of Attorney, presumably to petitioner herein, was submitted to the USPTO on November 28, 2001. However, since the deciding official's office does not have access to the file in view of the Secrecy Order imposed thereon, such cannot be verified. The computer database records for this file still indicate the address for this application to be that of Pillsbury Winthrop. If in fact an appropriate power of attorney has not been submitted and petitioner desires to receive future correspondence regarding this application, the appropriate power of attorney documentation must be submitted.

Any questions concerning this decision may be directed to the undersigned at (703) 305-8680.

Frances Hicks

Frances Hicks
Petitions Examiner
Office of Petitions
Office of the Deputy Commissioner
for Patent Examination Policy

BEST AVAILABLE COPY

UNITED STATES PATENT AND TRADEMARK OFFICE

COMMISSIONER FOR PATENTS
UNITED STATES PATENT AND TRADEMARK OFFICE
P.O. BOX 1450
ALEXANDRIA, VA 22313-1450
www.uspto.gov
DW 12-03

Paper No. 26

JACOBSON HOLMAN PLLC
400 SEVENTH STREET N.W.
SUITE 600
WASHINGTON DC 20004

BEST AVAILABLE COPY

COPY MAILED
DEC 1 0 2003
OFFICE OF PETITIONS

In re Application of	:	
Hoesel et al.	:	
Application No. 09/568,227	:	ON PETITION
Filed: 8 May, 2000	:	
Atty Docket No. PM268196 D700098US	:	

This is a petition on the petition filed under 37 CFR 1.182 which is treated as (1) a petition under 37 CFR 1.182 to withdraw the Notice the Improper CPA Filing, mailed on 22 October, 2003, and (2) a petition under 37 CFR 1.181 to withdraw the holding of abandonment.

The petition is **granted**.

The application was filed on 8 May, 2000. On 24 April, 2002, a final Office action was issued. On 24 January, 2003, the period for reply was restarted. On 24 July, 2003, petitioners filed a request for a Continued Prosecution Application (CPA) along with a two (2) month extension of time. On 22 October, 2003, a Notice of Improper CPA Filing was mailed, stating the CPA was improper because it was not accompanied by a submission and because an extension of time under 37 CFR 1.136(a) was required to establish copendency with the prior application. A Notice of Abandonment was also mailed on 22 October, 2003.

The present petition was filed on 1 December, 2003. Petitioners assert that the CPA filed on 24 June, 2003, was not improper and was timely filed.

37 CFR 1.53(d)(1)(i)(A) states, in pertinent part:

> (1) a continuation or divisional application of a prior nonprovisional application may be filed as a continued prosecution application under this paragraph provided that the prior nonprovisional application is a

utility application that was filed under 35 U.S.C. § 111(a) before May 29, 2000.

A review of the application file reveals that the application was filed on 8 May, 2000, and no CPA had been entered in the application subsequent to 29 May, 2000. As such, this application was eligible for CPA practice as of 24 June, 2003. Furthermore, no submission is required to be filed with an application under 37 CFR 1.53(d).

Regarding the extension of time, a review of the file reveals that a two (2) month extension of time was filed on 24 June, 2003. A review of Office PALM records and the file jacket reveals that the period for reply was restarted on 24 January, 2003. As such, the CPA and extension of time filed on 24 June, 2003, were timely filed.

As the CPA filed on 24 June, 2003, was timely and proper, the Notice of Improper CPA Filing is rescinded. The holding of abandonment is also withdrawn.

As the present petition was not due to an error on the part of petitioners, the petition fee of $130.00 will be credited to counsel's deposit account, No. 06-1358.

The application is being forwarded to Technology Center 3600 for processing of the CPA filed on 24 June, 2003.

Telephone inquiries concerning this matter may be directed to the undersigned at (703)308-6918.

D Wood

Douglas I. Wood
Senior Petitions Attorney
Office of Petitions

BEST AVAILABLE COPY

BEST COPY

UNITED STATES PATENT AND TRADEMARK OFFICE

COMMISSIONER FOR PATENTS
UNITED STATES PATENT AND TRADEMARK OFFICE
P.O. BOX 1450
ALEXANDRIA, VA 22313-1450
www.uspto.gov

EVERITT BEERS
5000 HOPYARD ROAD
SUITE 400
PLEASANTON, CA 94588

COPY MAILED

MAY 15 2007

OFFICE OF PETITIONS

In re Application of	:	
Jer-Chen Kuo et al	:	
Application No. 09/568,358	:	DECISION ON PETITION
Filed: May 10, 2000	:	
Attorney Docket No. A0638.018	:	

This is a decision on the petition under 37 CFR 1.137(b), filed September 20, 2006, to revive the above-identified application.

The petition is **GRANTED.**

The application became abandoned for failure to timely reply within the meaning of 37 CFR 1.113 to the final Office action, mailed January 12, 2005, which set a shortened statutory period for reply of three (3) months. No extensions of time were obtained under the provisions of 37 CFR 1.136(a). Accordingly, the application became abandoned on April 13, 2005. A Notice of Abandonment was mailed on July 28, 2006.

The petition satisfies the requirements of 37 CFR 1.137(b) in that petitioner has supplied (1) the required reply in the form of an amendment, (2) the petition fee of $750, and (3) a proper statement of unintentional delay. Accordingly, the failure to timely reply to the Office action of January 12, 2005 is accepted as being unintentionally delayed.

An extension of time under 37 CFR 1.136 must be filed prior to the expiration of the maximum extendable period for reply. *See* In re Application of S., 8 USPQ2d 1630, 1631 (Comm'r Pats. 1988). Since the $510 extension of time fee submitted with the petition on September 20, 2006 was subsequent to the maximum extendable period for reply, this fee is unnecessary and will be refunded in due course.

This application is being referred to Technology Center AU 2613 for appropriate action in the normal course of business on the reply received September 20, 2006.

Telephone inquiries concerning this decision should be directed to the undersigned at (571) 272-3218.

Frances Hicks
Petitions Examiner
Office of Petitions

UNITED STATES PATENT AND TRADEMARK OFFICE

COMMISSIONER FOR PATENTS
UNITED STATES PATENT AND TRADEMARK OFFICE
P.O. BOX 1450
ALEXANDRIA, VA 22313-1450
www.uspto.gov

AUG - 6 2003

Mailed:_____

mfh
Paper Number: 13

In re application of
Bjornson et al.
Serial No. 09/856,456
Filed: May 9, 2000
For: CONTINUOUS FORM MICROSTRUCTURE ASSAY ARRAY

DECISION ON PETITION

This is a response to the PETITION TO WITHDRAW HOLDING OF ABANDONMENT UNDER 37 CFR 1.181(a), filed February 21, 2003. The petition requests that the abandonment, as set forth in the Notice of Abandonment of February 5, 2003, for failure to timely file a proper response to the Office letter mailed June 27, 2002 be withdrawn. The petitioner asserts that the Office letter was not received by the applicants or any authorized representative of the applicants.

DECISION

The instant request is accepted as a timely petition under 37 C.F.R. 1.181 (no fee), and is evaluated under the procedures regarding an acceptable showing of non-receipt of an office action. See MPEP 711.03(c)(II).

The evidence presented is sufficient to establish that the above noted Office letter was not received by petitioner. The evidence provided includes a statement by the petitioner that the Office letter was not received, a statement that a search of the file and docket records was made, and a statement that the search revealed the Office letter was not received. Also provided is a copy of the attorney's application docket records where the Office letter would have been posted had it been timely received.

Therefore, the abandonment is hereby withdrawn, and the application is returned to pending status. The application shall be forwarded to the examiner for prompt remailing of the Office letter to the correspondence address and restarting of the statutory period of response from the remail date thereof.

The Petition is **GRANTED**.

Jacqueline M. Stone

Jacqueline M. Stone, Director
Technology Center 1700
Chemical and Materials Engineering

Perkins Coie LLP
101 Jefferson Drive
Menlo Park CA 94025-1114

UNITED STATES PATENT AND TRADEMARK OFFICE

UNITED STATES DEPARTMENT OF COMMERCE
United States Patent and Trademark Office
Address: COMMISSIONER FOR PATENTS
P.O. Box 1450
Alexandria, Virginia 22313-1450
www.uspto.gov

APPLICATION NO.	FILING DATE	FIRST NAMED INVENTOR	ATTORNEY DOCKET NO.	CONFIRMATION NO.
09/568,570	05/10/2000	Peter Ham	WVANP002	8208

34071 7590 04/29/2008
IPVENTURE, INC.
5150 EL CAMINO REAL
SUITE A-22
LOS ALTOS, CA 94022

EXAMINER
O'CONNOR, GERALD J

ART UNIT	PAPER NUMBER
3627	

MAIL DATE	DELIVERY MODE
04/29/2008	PAPER

Please find below and/or attached an Office communication concerning this application or proceeding.

The time period for reply, if any, is set in the attached communication.

UNITED STATES PATENT AND TRADEMARK OFFICE

Commissioner for Patents
United States Patent and Trademark Office
P.O. Box 1450
Alexandria, VA 22313-1450
www.uspto.gov

MAILED
FROM DIRECTORS OFFICE

APR 2 8 2008

TECHNOLOGY CENTER 3600

Peter Tong
IPVENTURE, INC.
5150 EL CAMINO REAL
SUITE A-22
LOS ALTOS, CA 94022

In re Application of
Ham et al.

ON PETITION FOR
WITHDRAWAL OF
RESTRICTION REQUIRMENT
UNDER 37 CFR 1.181

Appl. No. 09/568,570
Filed: May 10, 2000
For: **INVENTORY REPLICATION BASED UPON ORDER FULFILLMENT RATES**

This is a decision on Applicant's Petition under 37 CFR 1.181 received on July 26, 2006 requesting withdrawal of the requirement for restriction made final in the Office action mailed 7/13/2006.

The Petition is **DISMISSED as MOOT.**

The petitioner argues that in the instant case the restriction requirement made final on 7/13/2006 is improper since similar claims/limitations have been previously examined, there would not be a serious burden for the examiner to continue the examination of the application on the merits without the restriction requirement, and the restriction would unnecessarily and substantially burden applicant.

A review of the file history indicates that the examiner issued several Office actions prior to the restriction requirement. The examiner issued the restriction requirement on 3/20/2006 after an amendment submitted by applicant on 11/29/2005. Each group of invention designated by the Examiner was amended with similar language. Therefore, it would not have been a serious burden on the examiner to examine all of these groups in the instant application and for at least this reason, the restriction requirement is deemed improper.

However, the applicant submitted newly amended claims on 3/30/2007 and again on 9/25/2007, changing the scope of the invention, that resulted in the examiner issuing a Notice of Allowance on 12/27/2007.

Therefore, in view of the examiner's notice of allowance, the petition for withdrawal of the restriction requirement is moot and thereby dismissed.

SUMMARY: The Petition is **DISMISSED as MOOT.**

Any questions regarding this decision should be directed to SPE Florian Zeender at (571) 272-6790.

Wynn Coggins, Director
Technology Center 3600
(571) 272-5350

FZ/snm: 4/18/2008

SM

UNITED STATES PATENT AND TRADEMARK OFFICE

Commissioner for Patents
United States Patent and Trademark Office
P.O. Box 1450
Alexandria, VA 22313-1450
www.uspto.gov

HENRY P SARTORIO
DEPUTY LABORATORY COUNSEL FOR PATENTS
LAWRENCE LIVERMORE NATIONAL LABORATORY
P O BOX 808 L 703
LIVERMORE, CA 94551

COPY MAILED

JUN 0 3 2004

OFFICE OF PETITIONS

In re Application of	:	
M. Allen Northrup, et al.	:	
Application No. 09/568,618	:	ON PETITION
Filed: May 10, 2000	:	
Attorney Docket No. IL-9962B	:	

This is a decision on the petition under 37 CFR 1.137(b), filed March 31, 2004, to revive the above-identified application.

The petition is **GRANTED.**

The above-identified application became abandoned for failure to reply in a timely manner to the final Office action mailed September 10, 2003, which set a shortened statutory period for reply of three (3) months. A three-month extension of time under the provisions of 37 CFR 1.136(a) was obtained. Accordingly, the application became abandoned on March 11, 2004.

The statement claiming small entity status in accordance with 37 CFR 1.27 embodied in the petition under 37 CFR 1.137(b) has been made of record and small entity status has been accorded.

Since the present RCE was filed without a submission, the unentered amendment filed February 17, 2004 will be considered the submission required under 37 CFR 1.114.

The application file is being forwarded to Technology Center 1700, Art Unit 1743 for processing the Request for Continued Examination under 37 CFR 1.114 filed with the instant petition.

Telephone inquiries concerning this decision should be directed to the undersigned at (703) 306-5594.

Retta Williams

Retta Williams
Petitions Examiner
Office of Petitions
Office of the Deputy Commissioner
for Patent Examination Policy

UNITED STATES PATENT AND TRADEMARK OFFICE

Commissioner for Patents
United States Patent and Trademark Office
P.O. Box 1450
Alexandria, VA 22313-1450
www.uspto.gov

RANDALL B. BATEMAN
BATEMAN IP LAW GROUP
8 EAST BROADWAY, SUITE 550
PO BOX 1319
SALT LAKE CITY UT 84110

COPY MAILED

APR 25 2005

OFFICE OF PETITIONS

In re Application of :
Snow :
Application No. 09/568,643 : ON PETITION
Filed: May 10, 2000 :
Attorney Docket No. 0949PT :
For: MEDICAMENT CONTAINER WITH SAME SIDE AIRFLOW INLET AND OUTLET AND METHOD OF USE

This is a decision on the petition under 37 CFR 1.137(b), filed February 18, 2005 (certificate of mailing date February 15, 2005), to revive the above-identified application.

The above-identified application became abandoned for failure to submit corrected formal drawings in response to the Notice Regarding Drawings, mailed November 3, 2004, which set a non-extendable two (2) month period for reply. No response being received, the application became abandoned on January 4, 2005. A Notice of Abandonment was mailed on February 18, 2005.

Applicant has submitted corrected formal drawings, a statement of the unintentional nature of the delay in responding to the November 3, 2004 Notice, and the petition fee.[1]

The petition under 37 CFR 1.137(b) is **GRANTED**.

After the mailing of this decision the application will be forwarded to Publications Division for processing into a patent.

---

[1]The statement of unintentional delay presented in the petition does not comply with the current rule. 37 CFR 1.137(b)(3) requires a statement that "the entire delay in filing the required reply from the due date for the reply until the filing of a grantable petition pursuant to 37 CFR 1.137(b) was unintentional" be submitted. However, the statement presented will be accepted and construed as meaning that "the entire delay in filing the required reply from the due date for the reply until the filing of a grantable petition pursuant to 37 CFR 1.137(b) was unintentional." If this is an incorrect interpretation in view of the rules, petitioner is required to provide a statement to that effect.

Telephone inquiries pertaining to this matter may be directed to the undersigned at (571) 272-3230.

E. Shirene Willis

E. Shirene Willis
Senior Petitions Attorney
Office of Petitions

UNITED STATES PATENT AND TRADEMARK OFFICE

UNITED STATES DEPARTMENT OF COMMERCE
United States Patent and Trademark Office
Address: COMMISSIONER FOR PATENTS
P.O. Box 1450
Alexandria, Virginia 22313-1450
www.uspto.gov

October 23, 2003

Jeffrey A. Hall
212 Clinton St.
Santa Cruz, CA 95062

In re application of:
Christoph Karl LaDue DECISION ON PETITION
Serial No.: 09/568,654
Filed: May 9, 2001
For: ACTIVE SYMBOLIC SELF DESIGN METHOD AND APPARATUS

This is a decision on the petition received September 10, 2002, to withdraw the holding of abandonment in the above-identified application.

The above-identified application became abandoned for failure to reply within the meaning of 37 C.F.R. 1.113 in timely manner to the Notice of Corrected Application Papers mailed June 20, 2001. In which the notice gave a shortened statutory period for reply of two (2) months. Accordingly, this application became abandoned on August 21, 2001. The notice of abandonment was mailed on August 26, 2002.

Upon review, it was noted that the Notice of Corrected Application Papers mailed on June 20, 2001, was mailed in error. The application has been completed and released to Technology Center 3713.

The office regrets any inconvenience this may have caused the client.

Telephone inquiries concerning this matter may be directed to Doshie E. Day
(703) 308-3640

Doshie Day

Doshie E. Day
Program Management Assistant
Office initial Patent Examination

OIPE JC149
SEP 1 0 2002
PATENT & TRADEMARK OFFICE

COPY OF PAPERS
ORIGINALLY FILED

3713

M.P. ~~3729~~

IN THE UNITED STATES PATENT AND TRADEMARK OFFICE

RECEIVED
SEP 1 6 2002
TECHNOLOGY CENTER R3700

Applicants: LaDue, C.
Serial No.: 09/853,068
Filed 05/09/2001
Title: Active Symbolic Self Design Method And Apparatus
Examiner: Nguyen, B
GAU: 3729

Request for Information and Withdrawal of Erroneously Sent Notice of Abandonement

Initial Patent Examination Division
US Patent and Trademark Office
Washington, D.C. 20231

Sir:

Applicant respectfully requests information regarding the "Notice of Abanonment Under 37 1.53(f) or (g) mailed 08/26/2002 regarding the above-identified patent application. as follows.

1. No "Notice to File Missing Parts" was received either by myself Jeffrey A. Hall Attorney record, or applicant, Christoph Karl LaDue.

2. Attached is a copy of the return receipt postcard from the US Patent and Trademark Office showing receipt of all of the specification, claims, abstract, drawing, declarations, new application transmittal, notice of filing divisional, and all fees for this application filed with this application on 05/09/01.

3. **A copy of the 'Notice to File Missing Parts" which allegedly was sent to applicant is therefore respectfully requ sted.**

4. Withdrawal of the "Notice of Abandonment is respectfully requested, because no such "Notice of Missing Parts" was ever mailed to applicant, and because, as noted in (2.) above, all parts of this application were timely received by the US Patent and Trademark Office as evidenced by the attached return receipt postcard.

Respectfully submitted,

Jeffrey Hall
Reg. No. 32570
(831) 423-1365
212 Clinton St.
Santa Cruz, CA. 95062

CERTIFICATE OF MAILING

I hereby certify that this correspondence is being deposited with the United States Postal Service as first class mail in an envelope addressed to U.S. Patent and Trademark Office, Washington, D.C. 20231 on September 4, 2002

September 4, 2002
By: _____
Jeffrey Hall
Reg. No. 32570
212 Clinton St.
Santa Cruz, CA.
(831) 423-1365

COPY OF PAPERS
ORIGINALLY FILED

UNITED STATES PATENT AND TRADEMARK OFFICE

COMMISSIONER FOR PATENTS
UNITED STATES PATENT AND TRADEMARK OFFICE
WASHINGTON, D.C. 20231
www.uspto.gov

APPLICATION NUMBER	FILING DATE	FIRST NAMED APPLICANT	ATTY. DOCKET NO./TITLE
09/853,068	05/09/2001	Christoph Karl LaDue	ASSDMA-DIV2X

CONFIRMATION NO. 8524

ABANDONMENT/TERMINATION LETTER

OC000000008682640

Date Mailed: 08/26/2002

Jeffrey A. Hall
212 Clinton Street
Santa Cruz, CA 95062

OIPE JC149
SEP 1 0 2002
PATENT & TRADEMARK OFFICE

new named -??

NOTICE OF ABANDONMENT UNDER 37 CFR 1.53 (f) OR (g)

The above-identified application is abandoned for failure to timely or properly reply to the Notice to File Missing Parts (Notice) mailed on 06/20/2001.

A petition to the Commissioner under 37 CFR 1.137 may be filed requesting that the application be revived.

Under 37 CFR 1.137(a), a petition requesting the application be revived on the grounds of **UNAVOIDABLE DELAY** must be filed promptly after the applicant becomes aware of the abandonment and such petition must be accompanied by: (1) an adequate showing of the cause of unavoidable delay; (2) the required reply to the above-identified Notice; (3) the petition fee set forth in 37 CFR 1.17(l); and (4) a terminal disclaimer if required by 37 CFR 1.137(d).

Under 37 CFR 1.137(b), a petition requesting the application be revived on the grounds of **UNINTENTIONAL DELAY** must be filed promptly after applicant becomes aware of the abandonment and such petition must be accompanied by: (1) a statement that the entire delay was unintentional; (2) the required reply to the above-identified Notice; (3) the petition fee set forth in 37 CFR 1.17(m); and (4) a terminal disclaimer if required by 37 CFR 1.137(d).

Any questions concerning petitions to revive should be directed to "Office of Petitions" at (703) 305-9282.

A copy of this notice MUST be returned with the reply.

Customer Service Center
Initial Patent Examination Division (703) 308-1202
PART 2 - COPY TO BE RETURNED WITH RESPONSE

RECEIVED
SEP 1 6 2002

UNITED STATES PATENT AND TRADEMARK OFFICE

COMMISSIONER FOR PATENTS
UNITED STATES PATENT AND TRADEMARK OFFICE
WASHINGTON, D.C. 20231
www.uspto.gov

APPLICATION NUMBER	FILING DATE	FIRST NAMED APPLICANT	ATTY. DOCKET NO./TITLE
09/853,068	05/09/2001	Christoph Karl LaDue	ASSDMA-DIV2X

CONFIRMATION NO. 8524

Jeffrey A. Hall
212 Clinton Street
Santa Cruz, CA 95062

ABANDONMENT/TERMINATION LETTER

OC000000008682640

Date Mailed: 08/26/2002

NOTICE OF ABANDONMENT UNDER 37 CFR 1.53 (f) OR (g)

The above-identified application is abandoned for failure to timely or properly reply to the Notice to File Missing Parts (Notice) mailed on 06/20/2001.

A petition to the Commissioner under 37 CFR 1.137 may be filed requesting that the application be revived.

Under 37 CFR 1.137(a), a petition requesting the application be revived on the grounds of **UNAVOIDABLE DELAY** must be filed promptly after the applicant becomes aware of the abandonment and such petition must be accompanied by: (1) an adequate showing of the cause of unavoidable delay; (2) the required reply to the above-identified Notice; (3) the petition fee set forth in 37 CFR 1.17(l); and (4) a terminal disclaimer if required by 37 CFR 1.137(d).

Under 37 CFR 1.137(b), a petition requesting the application be revived on the grounds of **UNINTENTIONAL DELAY** must be filed promptly after applicant becomes aware of the abandonment and such petition must be accompanied by: (1) a statement that the entire delay was unintentional; (2) the required reply to the above-identified Notice; (3) the petition fee set forth in 37 CFR 1.17(m); and (4) a terminal disclaimer if required by 37 CFR 1.137(d).

Any questions concerning petitions to revive should be directed to "Office of Petitions" at (703) 305-9282.

A copy of this notice MUST be returned with the reply.

Customer Service Center
Initial Patent Examination Division (703) 308-1202

PART 3 - OFFICE COPY

UNITED STATES PATENT AND TRADEMARK OFFICE

COMMISSIONER FOR PATENTS
UNITED STATES PATENT AND TRADEMARK OFFICE
WASHINGTON, D.C. 20231
www.uspto.gov

Paper No. 5

Richard J Rodrick Esq.
Intellectual Property Dept MC 089
Becton Dickinson and Company
1 Becton Drive
Franklin Lakes NJ 07417-1880

COPY MAILED

FEB 0 4 2003

OFFICE OF PETITIONS

In re Application of
Stevens, et al.
Application No. 09/568,671
Filed: May 11, 2000
Attorney Docket No. P-4360/1P1

DECISION ON PETITION

This is a decision on the petition under 37 CFR 1.137(b) filed January 28, 2003. The petition shall also be treated as a petition to withdraw the holding of abandonment pursuant to 37 CFR 1.181(a).

The petition under 37 CFR 1.181(a) is **granted**.

The petition under 37 CFR 1.137(b) is **moot.**

TREATMENT UNDER 37 CFR 1.181(a)

This application was held abandoned on January 19, 2002, after no reply was received to file non-final Office action mailed December 18, 2001. The non-final Office action set a one-month period for reply, beginning from the date of its mailing, and advised that extensions of the time for reply were available pursuant to 37 CFR 1.136(a). No reply was believed to have been received within the allowable period. The application was, therefore, held abandoned on January 18, 2002. A Notice of Abandonment was mailed on May 20, 2002.

The instant petition was accompanied by a copy of the Office-date stamped postcard receipt showing that a response to the non-final Office action was received on March 14, 2002. The petition was also accompanied by a response to the non-final Office action showing a certificate of mailing dated March 6, 2002. Although the response filed on March 14, 2002, was not found among the application papers, the evidence is convincing that the response to the non-final Office action was received on March 14, 2002, and misplaced by the Office.

Deposit account 02-1666 will be assessed $400.00 for the extension of time within the second month that is necessary in order for the March 14, 2002, to be considered timely.

TREATMENT UNDER 37 CFR 1.137(b)

The holding of abandonment will be withdrawn as of the mailing date of this decision, pursuant to the decision granting the petition under 37 CFR 1.181(a). There is no remedy that can be provided by a petition under 37 CFR 1.137(b); the petition under 37 CFR 1.137(b) is, therefore, moot.

Deposit account 02-1666 will be refunded $1,300.00 for the fee associated with a petition under 37 CFR 1.137(b).

The application file will be forwarded to Technology Center 1700 for further processing.

Telephone inquiries concerning this decision may be directed to the undersigned at (703) 305-0010

Kenya A. McLaughlin

Kenya A. McLaughlin
Petitions Attorney
Office of Petitions

UNITED STATES PATENT AND TRADEMARK OFFICE

Commissioner for Patents
United States Patent and Trademark Office
P.O. Box 1450
Alexandria, VA 22313-1450
www.uspto.gov

In re Patent No. 6247467
Issue Date: June 19,2001
Application No. 09568773
Filed: May 10,2000
Attorney Docket No. KLR 7957.001

:

:DECISION GRANTING PETITION
:UNDER 37 CFR 1.378(c)

:

This is a decision on the electronic petition, filed August 10,2009 ,under 37 CFR 1.378(c) to accept the unintentionally delayed payment of the 7.5 year maintenance fee for the above-identified patent.

The petition is **GRANTED**.

The maintenance fee is accepted, and the above-identified patent reinstated as of August 10,2009 . This decision also constitutes notice that the fee has been accepted. An electronic copy of the petition and this decision has been created as an entry in the Image File Wrapper. Nevertheless, petitioner should print and retain an independent copy.

Telephone inquiries related to this electronic decision should be directed to the Electronic Business Center at 1-866-217-9197.

PTO/SB/66 (03-09)
Approved for use through 03/31/2012. OMB 0651-0016
U.S. Patent and Trademark Office: U.S. DEPARTMENT OF COMMERCE
Under the Paperwork Reduction Act of 1995, no persons are required to respond to a collection of information unless it displays valid OMB control number.

PETITION TO ACCEPT UNINTENTIONALLY DELAYED PAYMENT OF MAINTENANCE FEE IN AN EXPIRED PATENT (37 CFR 1.378(c))

Patent Number	Issue Date (YYYY-MM-DD)	Application Number	Filing Date (YYYY-MM-DD)	Docket Number (if applicable)
6,247,467	2001-06-19	09/568,773	2000-05-10	7957.0001

CAUTION: Maintenance fee (and surcharge, if any) payment must correctly identify: (1) the patent number and (2) the application number of the actual U.S. application leading to issuance of that patent to ensure the fee(s) is/are associated with the correct patent. 37 CFR 1.366(c) and (d).

SMALL ENTITY
☒ Patentee claims, or has previously claimed, small entity status. See 37 CFR 1.27.

LOSS OF ENTITLEMENT TO SMALL ENTITY STATUS
☐ Patentee is no longer entitled to small entity status. See 37 CFR 1.27(g)

NOT Small Entity		Small Entity	
Fee	Code	Fee	Code
○ 3 ½ year	(1551)	○ 3 ½ year	(2551)
○ 7 ½ year	(1552)	◉ 7 ½ year	(2552)
○ 11 ½ year	(1553)	○ 11 ½ year	(2553)

SURCHARGE
The surcharge required by 37 CFR 1.20(i)(2) (Fee Code 1558) must be paid as a condition of accepting unintentionally delayed payment of the maintenance fee.

MAINTENANCE FEE (37 CFR 1.20(e)-(g))
The appropriate maintenance fee must be submitted with this petition.

STATEMENT
THE UNDERSIGNED CERTIFIES THAT THE DELAY IN PAYMENT OF THE MAINTENANCE FEE TO THIS PATENT WAS UNINTENTIONAL

PETITIONER(S) REQUEST THAT THE DELAYED PAYMENT OF THE MAINTENANCE FEE BE ACCEPTED AND THE PATENT REINSTATED

THIS PORTION MUST BE COMPLETED BY THE SIGNATORY OR SIGNATORIES

37 CFR 1.378(d) states: "Any petition under this section must be signed by an attorney or agent registered to practice before the Patent and Trademark Office, or by the patentee, the assignee, or other party in interest."

I certify, in accordance with 37 CFR 1.4(d)(4) that I am

◉ An attorney or agent registered to practice before the Patent and Trademark Office

○ A sole patentee

○ A joint patentee; I certify that I am authorized to sign this submission on behalf of all the other patentees.

○ A joint patentee; all of whom are signing this e-petition

○ The assignee of record of the entire interest

Patent Practitioner			
A signature of the applicant or representative is required in accordance with 37 CFR 1.33 and 10.18. Please see 37 CFR 1.4(d) for the form of the signature			
Signature	/Kevin L. Russell/	Date (YYYY-MM-DD)	2009-08-10
Name	Kevin L. Russell	Registration Number	38292

This collection of information is required by 37 CFR 1.378(c). The information is required to obtain or retain a benefit by the public which is to file (and by the USPTO to process) an application. Confidentiality is governed by 35 U.S.C. 122 and 37 CFR 1.11 and 1.14. This collection is estimated to take 1 hour to complete, including gathering, preparing, and submitting the completed application form to the USPTO. Time will vary depending upon the individual case. Any comments on the amount of time you require to complete this form and/ or suggestions for reducing this burden, should be sent to the Chief Information Officer, U.S. Patent and Trademark Office, U.S. Department of Commerce, P.O. Box 1450, Alexandria, VA 22313-1450. DO NOT SEND FEES OR COMPLETED FORMS TO THIS ADDRESS. **This form can only be used when in conjunction with EFS-Web. If this form is mailed to the USPTO, it may cause delays in reinstating the patent.**

Privacy Act Statement

The Privacy Act of 1974 (P.L. 93-579) requires that you be given certain information in connection with your submission of the attached form related to a patent application or patent. Accordingly, pursuant to the requirements of the Act, please be advised that: (1) the general authority for the collection of this information is 35 U.S.C. 2(b)(2); (2) furnishing of the information solicited is voluntary; and (3) the principal purpose for which the information is used by the U.S. Patent and Trademark Office is to process and/or examine your submission related to a patent application or patent. If you do not furnish the requested information, the U.S. Patent and Trademark Office may not be able to process and/or examine your submission, which may result in termination of proceedings or abandonment of the application or expiration of the patent.

The information provided by you in this form will be subject to the following routine uses:

1. The information on this form will be treated confidentially to the extent allowed under the Freedom of Information Act (5 U.S.C. 552) and the Privacy Act (5 U.S.C. 552a). Records from this system of records may be disclosed to the Department of Justice to determine whether the Freedom of Information Act requires disclosure of these records.

2. A record from this system of records may be disclosed, as a routine use, in the course of presenting evidence to a court, magistrate, or administrative tribunal, including disclosures to opposing counsel in the course of settlement negotiations.

3. A record in this system of records may be disclosed, as a routine use, to a Member of Congress submitting a request involving an individual, to whom the record pertains, when the individual has requested assistance from the Member with respect to the subject matter of the record.

4. A record in this system of records may be disclosed, as a routine use, to a contractor of the Agency having need for the information in order to perform a contract. Recipients of information shall be required to comply with the requirements of the Privacy Act of 1974, as amended, pursuant to 5 U.S.C. 552a(m).

5. A record related to an International Application filed under the Patent Cooperation Treaty in this system of records may be disclosed, as a routine use, to the International Bureau of the World Intellectual Property Organization, pursuant to the Patent Cooperation Treaty.

6. A record in this system of records may be disclosed, as a routine use, to another federal agency for purposes of National Security review (35 U.S.C. 181) and for review pursuant to the Atomic Energy Act (42 U.S.C. 218(c)).

7. A record from this system of records may be disclosed, as a routine use, to the Administrator, General Services, or his/her designee, during an inspection of records conducted by GSA as part of that agency's responsibility to recommend improvements in records management practices and programs, under authority of 44 U.S.C. 2904 and 2906. Such disclosure shall be made in accordance with the GSA regulations governing inspection of records for this purpose, and any other relevant (i.e., GSA or Commerce) directive. Such disclosure shall not be used to make determinations about individuals.

8. A record from this system of records may be disclosed, as a routine use, to the public after either publication of the application pursuant to 35 U.S.C. 122(b) or issuance of a patent pursuant to 35 U.S.C. 151. Further, a record may be disclosed, subject to the limitations of 37 CFR 1.14, as a routine use, to the public if the record was filed in an application which became abandoned or in which the proceedings were terminated and which application is referenced by either a published application, an application open to public inspections or an issued patent.

9. A record from this system of records may be disclosed, as a routine use, to a Federal, State, or local law enforcement agency, if the USPTO becomes aware of a violation or potential violation of law or regulation.

UNITED STATES PATENT AND TRADEMARK OFFICE

OFFICE

Paper No. 20

STRADLING YOCCA CARLSON & RAUTH
SUITE 1600
660 NEWPORT CENTER DRIVE
P.O. BOX 7680
NEWPORT BEACH CA 92660

COPY MAILED

NOV 1 8 2004

Director's Office
Office of Patent Publication

In re Application of :
Tetsuji Yamaguchi :
Application No. 09/568,907 :
Filed: May 11, 2000 :
Attorney Docket No. 380153-61 :

DECISION ON PETITION

This is a decision on the Petition To Withdraw Holding Of Abandonment Under 37 CFR 1.181(A), received in the United States Patent and Trademark Office (USPTO) on October 14, 2003. The deciding official in the Office of Patent Publications received the Petition and the application file on November 18, 2004.

The petition is **DISMISSED.** Any request for reconsideration of this decision, or as explained below, filing a petition seeking revival under 37 CFR § 1.137, must be filed within TWO MONTHS (2) from the mail date of this decision.

The application was held abandoned for failure to timely pay the issue fee and publication fee within the three (3) month statutory period to reply, as required in the Notice Of Allowance and Fee(s) Due, mailed April 23, 2003. Accordingly, the Notice of Abandonment was mailed September 24, 2003.

Petitioner states that the Issue Fee payment was timely filed on July 21, 2003 and notes that the deposit account number was not included in the Part B – Transmittal but the letter accompanying the form indicated that "The Commissioner is hereby authorized to charge any additional fees...to Account No. 50-1329."

The USPTO acknowledges receipt of Part B – Fee(s) Transmittal—present in the application file—on July 23, 2003, as evidenced by the "Office Date" stamp thereon. Unfortunately, on July 24, 2003, when an attempt was made by the Office of Finance to charge the fee, there were insufficient funds in the Deposit Account. The petitioner therefore has not complied with 37 CFR 1.25(b), which states in part:

> ... An authorization to charge a fee to a deposit account will not be considered payment of the fee on the date the authorization to charge the fee is effective as to the particular fee to charged unless sufficient funds are present in the account to cover the fee.

In light of the non-compliance with 37 CFR 1.25(b), the holding of abandonment cannot at this time be withdrawn.

Although this petition for withdrawal of holding of abandonment is being dismissed, further petition remedies are available for bringing about the withdrawal of the holding of abandonment.

File a petition for Revival of Abandoned Application under CFR § 1.137 (a) or (b).

- Under 37 CFR 1.137(a), a petition for the revival of an ***unavoidably*** abandoned application must be accompanied by the following:

  (1) The required reply to the outstanding Office action or notice, unless previously filed;
  (2) The petition fee set forth in § 1.17(l);
  (3) A showing to the satisfaction of the Commissioner that the entire delay in filing the required reply from the due date for the reply until the filing of a grantable petition pursuant to this paragraph was unavoidable: and
  (4) Any terminal disclaimer (and fee as set forth in § 1.20(d) required pursuant to paragraph (c) of this section.

- Under 37 CFR 1.137(b), a petition for the revival of an ***unintentionally*** abandoned application must be accompanied by the following:

  (1) The required reply to the outstanding Office action or notice, unless previously filed;
  (2) The petition fee as set forth in § 1.17(m);
  (3) A statement that the entire delay in filing the required reply from the due date for the reply until the filing of a grantable petition pursuant to this paragraph was unintentional. The Commissioner may require additional information where there is a question whether the delay was unintentional;
  (4) Any terminal disclaimer (and fee as set forth in § 1.20(d) required pursuant to paragraph (c) of this section.

Further correspondence with respect to filing the petition under 37 CFR 1.137 should be addressed as follows:

By mail: Commissioner For Patents
P O Box 1450
Mail Stop Petitions
Alexandria, VA 22313-1450

Telephone inquires concerning this decision may be directed to the undersigned at 703-305-8280.

Thomas E. Hawkins

Thomas E. Hawkins
Paralegal Specialist
Office of the Director
Office of Patent Publication

UNITED STATES PATENT AND TRADEMARK OFFICE

Commissioner for Patents
United States Patent and Trademark Office
P.O. Box 1450
Alexandria, VA 22313-1450
www.uspto.gov

Paper No. 25

BROWN RAYSMAN MILLSTEIN FELDER & STEINER, LLP
1880 CENTURY PARK EAST
12TH FLOOR
LOS ANGELES CA 90067

COPY MAILED

MAY 0 5 2005

OFFICE OF PETITIONS

In re Application of	:	
Yamaguchi	:	
Application No.09/568,907	:	ON PETITION
Filed: May 11, 2000	:	
Attorney Docket Number: 380153-61	:	
Title of Invention: Particle Size Distribution	:	
Measuring Apparatus and Method	:	
	:	

This is a decision on the petition filed March 21, 2005, under 37 CFR 1.137(b) to revive the above-identified application.

This application became abandoned for failure to timely submit the issue fee , as required by the Notice of Allowance and Fee (s) Due which was mailed April 23, 2003. The Notice of Allowance and Fee (s) Due set a three (3) month statutory period for reply. Extensions of time were not available under the provisions of 37 CFR 1.136(a). Accordingly, this application became abandoned on July 24, 2003. A Notice of Abandonment was mailed September 24, 2003.

The requirements for a grantable petition under 37 CFR 1.137(b) have been met. This petition is hereby **Granted**.

Petitioner is advised that the issue fee paid on March 21, 2005 in the above-identified application cannot be refunded. If however, the above-identified application is again allowed, petitioner may request that it be applied towards the issue fee required by the new Notice of Allowance. The request to apply the issue fee to the new Notice may be satisfied by completing and returning the new Issue Fee Transmittal Form PTOL-85(b), which includes the following language theron: "Director for Patents is requested to apply the Issue fee and Publican Fee (if Any) or re-apply any previously paid issue fee to the application identified above." Petitioner is advised that whether a fee is indicated as being due or not, the Issue Fee Transmittal Form MUST be completed and

timely submitted to avoid abandonment.

This application is being forwarded to Technology Center 2800 for processing of the RCE and the IDS submitted with the instant petition.

Telephone inquiries should be directed to the undersigned at (571) 272-3215.

Charlema R. Grant

Charlema R. Grant
Petitions Attorney
Office of Petitions

UNITED STATES
PATENT AND
TRADEMARK OFFICE

UNDER SECRETARY OF COMMERCE FOR INTELLECTUAL PROPERTY AND
DIRECTOR OF THE UNITED STATES PATENT AND TRADEMARK OFFICE
WASHINGTON, D.C. 20231
WWW.USPTO.GOV

MAY 24 2002

#11

RICHARD ARON OSMAN
SCIENCE AND TECHNOLOGY LAW GROUP
75 Denise Drive
Hillsborough, CA 94010

In re Application of	:
Curtis et al.	:
Serial No.: 09/568,942	: DECISION ON PETITION
Filed: 5 May 2000	:
Attorney Docket No. EX00-033	:

This is in response to applicants' petition filed 17 May 2002 for Commissioner review of the above-identified application.

BACKGROUND

A review of the file shows that this application was filed under 35 USC 111(a) on 5 May 200 with 42 claims.

In Paper No. 2, mailed 28 September 2001, the examiner set forth a restriction requirement under 35 USC 121, dividing the 42 claims up into 43 groups.

In Paper No. 3, filed 19 October 2001, Applicants elected Group VI, claims 1, 4, 5, 8 and 10-27, wherein the pen polypeptide is human pen-1, with traverse. Applicants traversed the segregation of this assay into 13 Groups corresponding to the 13 recited pen species that can be used in the assay. Paper No. 3 goes on to discuss the nature of the invention, referring to Part IV of the Examples section of the specification. Paper No 3 the states:

"The inventors have shown that the encoded pen proteins are involved in Notch and APP processing; hence the application discloses an assay for a stress (e.g., a chemical

modulator) which modulates a functional interaction of a pen with Notch o APP processing. Canceled claims 1-27 and all the new claims are directed to this assay."

It is noted that no amendment had been received by the office as of that time, most likely because of the mail delays experienced by the Office in the Fall of 2001.

On 19 December 2001, a faxed copy of a Preliminary Amendment A, with a certificate of correction mail date of 16 October 2001, was matched to the file as Paper No. 4. In this amendment, all pending claims were canceled and new claims 43-68 were added. A computer readable form of the sequence listing was also submitted.

In Paper No. 5, filed 31 December 2001, Applicants submitted an Information Disclosure Statement.

On 5 February 2002, a CRF Problem report was filed as Paper No 6. This report stated that the computer readable form of the sequence listing was processed by the Scientific and Technical Information Center and determined to be damaged.

The examiner sent out a communication, Paper No. 7, mailed 11 February 2002, concerning the non-compliance with the sequence requirements and informing applicants of the damaged computer disk.

In Paper No. 8, Applicants submitted a substitute computer readable form of the sequence listing which was sufficient for compliance with the sequence requirements.

In Paper No. 9, a notice of non-responsive amendment was mailed 8 May 2002. This notice was prompted by the election of Group VI, then cancellation of claims drawn to elected Group and submission of claims drawn to non-originally presented claims in the amendment filed 19 December 2001. Applicants were required to reinstate the originally presented claims or to submit claims drawn to the elected subject matter as set forth in the restriction/election requirement.

The examiner noted that the elected invention (Group I) [note this should have read as Group VI] is methods of detecting a stress wherein the pen polypeptide is human pen-1. The examiner further noted that the original claims refer to "a functional interaction of a presenilin enhancer polypeptide with Notch or APP processing" and that the detection is of "a stress-biased interaction of the pen polypeptide with Notch or APP processing." newly presented claim 43 recites a "method for identifying a modulator of Notch or APP processing." The examiner explained that although the new claims recite reagents that are supported in the dependent embodiments of the previously elected invention, the base claims delineate distinct processes using the noted reagents. The examiner points to differences in the output or detection in new claim 43 is a resultant change in Notch or APP processing itself, a step that does not appear to be supported by any of the originally presented claims. Further, the examiner reasoned that the output or detecting in canceled claim 1 is of "a stress-biased interaction... that the stress alters the interaction of the pen

polypeptide with Notch or APP processing" does not have any correlation with "modulating the process of Notch or APP processing" itself as recited in new claim 43. The examine further elaborated that the "interaction" (as by binding) recited in claim 1 is different from the modulation of Notch or APP processing, a process whereby substrate molecules are cleaved form a larger fragment into two or more sub-fragments, as in claim 43. The examiner determined that the processes are distinct as they differ in reagents, steps, measurements and outcomes and are differentially detected. The examiner concluded that the newly presented claims are not clearly drawn to the invention originally presented and elected.

In Paper No. 11, filed 17 May 2002, Applicants submitted a petition requesting the Commissioner to examine this application. The petition asserts that the elected subject matter is methods of detecting a stress that alters a functional interaction of a pen polypeptide with Notch or APP processing. The petition states that canceled claim 1 of this elected group required the steps of

(a) introducing into a system a predetermined stress and
(b) detecting a resultant change in the interaction of pen with Notch/APP processing.

The Petition explains that the narrower embodiments of the specific system, and the predetermined stress, as recited in canceled claims 17 and 15, respectively, have been moved into independent claim 43. The Petition argues that the "detecting" recited in claim 24 includes detecting changes in Notch or APP processing by detecting AB generation. The Petition states that pending claim 43 recites the steps of

(a) providing a host cell stressed by disrupting a presenilin enhancer (PEN) gene function, said disruption sufficient to provide a sensitized notch or APP processing pathway,
(b) subjecting said cell to a putative modulator of Notch or APP processing and
(c) detecting a resultant change in Notch or APP processing in the cell to identify a modulator of Notch or APP processing.

The Petition states that the examiner's definition of detecting a 'stress-biased interaction of the Pen polypeptide with Notch or APP processing" is inconsistent with the originally filed claims and specification. The Petition asserts that the elected subject was never limited to a binding assay. The Petition alleges that the 8 May 2002 Communication does not reflect a reasoned and impartial consideration of the application. The Petition further submits that the action is part of an illegal discriminatory examination procedure established by a Supervisor and examiner. The Petition states that Applicants have repeatedly complained in other unrelated application serial numbers. The petition requests Director review of the examiner's conduct in the application in view of the cumulative conduct in all the co pending applications assigned.

DISCUSSION

The file history and the petition have been considered carefully.

Original claim 1 and newly added claim 43 are reproduced below in their entirety.

1. A method for specifically detecting a stress that alters a functional interaction of a presenilin enhancer (pen) polypeptide with Notch or APP processing, the method comprising steps;

   introducing a predetermined stress into a system which provides a functional interaction of a pen polypeptide with Notch or APP processing, whereby the system provides a stress-biased interaction of the pen polypeptide with Notch or AP processing, wherein the absence of the stress, the system provides unbiased interaction of the pen polypeptide with Notch or APP processing and

   detecting the stress-biased interaction of the pen polypeptide with Notch or APP processing, wherein a difference between the stress-biased and unbiased interaction indicates that the stress alters the interaction of the pen polypeptide with Notch or APP processing;

   wherein the system is selected from the group consisting of (I) a viable cell expressing the pen polypeptide wherein the pen polypeptide expression is determined to be non-natural or pathogenic, and (ii) an in vitro, cell-free mixture comprising a determined amount of the pen polypeptide,

   wherein the pen polypeptide has sequence similarity to a pen polypeptide selected from the group consisting of human, rat, mouse, D. melanogaster and C. elegans pen-2; human, mouse, D. melanogaster and C. elegans pen-1 and human pen-1B, wherein the similarity is at least 20% identity.

43. A method for identifying a modulator of Notch or amyloid precursor protein (APP) processing comprising:
    (a) providing a host cell stressed by disrupting a presenilin enhancer (pen) gene function, said disruption sufficient to provide a sensitized Notch or APP processing pathway, wherein pen comprises a sequence at least 90% identical to that of a wild-type pen selected from the group consisting of human (SEQ ID NO:12), mouse (SEQ ID NO:10), cow (SEQ ID NO;11), rat (SEQ ID No: 9), D. melanogaster (SEQ ID NO: 8) and C' elegans (SEQ ID NO: 7) Pen-2 and Human (SEQ ID NO: 5), mouse (SEQ ID NO:4), H. virescens (SEQ ID NO: 3), D.melanogaster (SEQ ID NO: 2) and C. elegans (SEQ ID No:1)Pen-1 and human (SEQ ID NO: 6) Pen-1B and the pen specifically binds an antibody specific to wild-type pen,
    (b) subjecting said cell to a putative modulator of Notch or APP processing, and
    (c) detecting a resultant change in Notch or APP processing in the cell to identify a modulator of Notch or APP processing.

The Petition states that claims 1 and 43 are the same invention. The petition points out some similarities between the steps of claims 1 and 43. The Petition argues that the steps, not the preamble, control the subject matter of the claimed invention. This is not persuasive for two reasons.

First, although the method steps share some similarities, for example, with regard to species of pen, there are many more striking differences.

The steps of Claim 1 require detecting stress-biased interaction of the pen polypeptide with Notch or APP processing. In contrast, Claim 43, step (a) requires a host cell with a disrupted pen gene function. Disrupting a gene function includes altering the rate or level of transcription including under- or over-expression, altered organelle-specific, tissue-specific or cell cycle-specific pattern of expression, etc. Disrupting a gene function also includes altering mRNA sequence and may result in reduced or increased half-life of mRNA, altered patterns of cellular localization of mRNA, etc. Disrupting pen gene function includes knocking out endogenous pen gene expression with or without replacement with an exogenous pen gene.

It can be argued that because the steps of Claim 43 include the limitation that the pen binds an antibody, pen polypeptide is required for claim 43. However, this limitation only qualifies the pen for which the gene has been disrupted. Nothing in claim 43 requires the presence of pen polypeptide. In contrast, claim 1 requires pen polypeptide.

Second, no litmus test defines when a preamble limits claim scope. Corning Glass, 868 F.2d at 1257. Claim language defines claim scope. SRI Int'l. v. Matsushita Elec. Corp. of Am., 775 F.2d 1107, 1121, 227 USPQ 577, 585 (Fed. Cir. 1985) (en banc). Generally, claim language receives its plain, ordinary meaning as used in the relevant art. Toro Co. v. White Consol. Indus., Inc., 199 F.3d 1295, 1299, 53 USPQ2d 1065, 1067 (Fed. Cir. 1999). Whether to treat a preamble as a limitation is a determination "resolved only on review of the entire[ ] . . . patent to gain an understanding of what the inventors actually invented and intended to encompass by the claim." Corning Glass Works v. Sumitomo Electric U.S.A., Inc., 868 F.2d 1251, 1257, 9 USPQ2d 1962, 1966 (Fed. Cir. 1989). In general, a preamble limits the invention if it recites essential structure or steps, or if it is "necessary to give life, meaning, and vitality" to the claim. Pitney Bowes, 182 F.3d at 1305.

In the instant claims, the preambles of claims 1 and 43 provide the endpoints of the methods and these endpoints differ. The method of claim 1 results in a detecting a stress that alters a functional interaction of pen polypeptide with Notch or APP processing. Claim 1 requires a functional interaction between pen polypeptide and Notch or APP processing components.

In contrast, Claim 43 is a method of identifying a modulator of Notch or APP processing. Claim 43 requires a host cell with a disrupted pen gene function. This disruption may knock out pen polypeptide synthesis. In claim 1 and 43, the preamble is

essential to understand the claim. When the preamble is essential to understand limitations or terms in the claim body, the preamble limits claim scope. Pitney Bowes, 182 F.3d at 1306. Taken as a whole, claims 1 and 43 recited patentably distinct inventions.

Therefore, Applicant have canceled all claims directed to the elected invention and added new claims directed to nonelected inventions. MPEP Chapter 800 states that an "amendment canceling all claims drawn to the elected invention and presenting only claims drawn to the nonelected invention should not be entered. Such an amendment is nonresponsive. Applicant should be notified by using form paragraph 8.26." The examiner followed the procedures in the MPEP in preparing Paper No. 9.

DECISION

Applicants' petition is **DENIED** for the reasons set forth above.

Applicants remain under obligation to timely reply to the letter mailed 8 May 2002.

Any request for reconsideration of this decision must be by way of a renewed petition and must be filed within TWO MONTHS of the date of mailing of this decision in order to be considered timely.

Should there be any questions with respect to this decision, please contact Special Program Examiner Julie Burke, Ph.D. by letter addressed to the Director, Technology Center 1600, Washington DC 20231. Alternatively, SPRE Burke can be reached by telephone at (703) 308-7553 or by facsimile transmission at (703) 305-7230.

Bruce M. Kisliuk
Director, Technology Center 1600

UNITED STATES
PATENT AND
TRADEMARK OFFICE

UNDER SECRETARY OF COMMERCE FOR INTELLECTUAL PROPERTY
AND DIRECTOR OF THE UNITED STATES PATENT AND TRADEMARK OFFICE
WASHINGTON, D.C. 20231
WWW.USPTO.GOV

DEC 13 2002

#17

RICHARD ARON OSSMAN
SCIENCE AND TECHNOLOGY LAW GROUP
75 DENISE DRIVE
HILLSBOROUGH, CA 94010

In re Application of	:
Daniel T. Curtis et al	:
Serial No.: 09/568,942	: PETITION DECISION
Filed: May 5, 2000	:
Attorney Docket No.: EX00-033	:

This is a decision on the petition under 37 CFR 1.181, filed August 9, 2002, requesting reversal of the examiner's holding of non-responsive amendment to an Office action.

BACKGROUND

A review of the file history is set forth in a previous petition decision mailed May 24, 2002, and is summarized here. This application was filed under 35 U.S.C. 111 and contained 42 claims as filed. On September 28, 2001, the examiner assigned to examine this application mailed a restriction requirement to applicants separating the claims into 43 groups, 29 of which were specific to a particular sequence or sequence fragment. It is also noted that each of the first 10 groups included claims 1, 8 and 10-27 combined with various other claims. Applicant replied by facsimile transmission (Certificate of transmission included) on October 19, 2001, electing Group VI, claims 1, 4-5, 8, and 10-27, with traverse. A paper entitled "Preliminary Amendment" was facsimile transmitted to the Office on December 19, 2001, but bears a Certificate of Mailing Date of October 16, 2001. It appears that the original of this paper has never been received. The amendment, which is thus dated three days before the reply to the restriction requirement, cancels all claims and adds claims 43-68. Thus applicants essentially elected claims which had supposedly already been canceled, but failed to indicate clearly what or how newly submitted claims were directed to or read on the elected invention, as should have been done.

On February 11, 2002, the examiner, in addition to sending applicants a notice of defective sequence disk, mailed applicants a Notice of non-responsive amendment based on the cancellation of the elected claims and set a time period of thirty days for reply. Applicants replied on February 26, 2002, by supplying an acceptable sequence disk and relying on their previous reply to the

restriction requirement arguing that the claims now presented are within the scope of the elected group. On May 8, 2002, the examiner mailed a second non-responsive amendment notice to applicants again stating that the elected subject matter, Group VI, was not encompassed within the newly presented claims 43-68. On May 17, 2002, applicants submitted a first petition by facsimile transmission requesting that the application be examined with respect to the preferred embodiments of the elected claims (i.e. to withdraw the examiner's holding of non-responsive amendment). On May 24, 2002, a decision denying applicants' petition was mailed to applicants.

Applicants further replied on May 30, 2002, by facsimile transmission directing that all pending claims be canceled and presenting claims 43-66. A Notice of Non-Compliant amendment was mailed to applicants on June 4, 2002, indicating that the amendment did not comply with 37 CFR 1.121 for amending an application and setting a one month period for reply. Applicants replied on June 24, 2002, by providing a new amendment canceling all previously pending claims and adding claims 69-92. The examiner then mailed a Notice of non-responsive amendment to applicants on August 6, 2002, setting a one month period for reply, and maintaining that the newly presented claims are not within the scope of the elected group for essentially the same reasons as presented before and affirmed in the petition decision. Applicants then filed this petition (which is similar in scope to the previous petition) asking that the examiner's holding of non-compliance be withdrawn (i.e. - that the pending claims be examined).

DISCUSSION

A thorough review of the previous petition decision and the claims involved has been made, as well as of the prosecution history of this application. A comparison of original claim 1, canceled claim 43 and now pending claim 69 has been made, the principal independent claims of each claim set presented. Both claims 1 and 43 were reproduced in the previous petition decision. The holding of non-compliance was maintained in that petition decision and applicants' petition was denied on the basis of the claim preambles being different and the steps recited within the claims being different. In response to that decision applicants submitted new claims 69-92 in which claim 69 is essentially identical to claim 43 except for the preamble which is now identical to original claim 1. However the body of claim 69 is essentially identical to that of claim 43.

In the previous petition decision it was clearly stated that the methods recited in each of the two claims are different. Claim 1 is directed to a method of introducing a predetermined stress into a system which then provides a functional interaction between pen polypeptide and Notch or APP and then detecting the stress based interaction or lack thereof as compared to a non-stressed system. In contrast, claim 69 is directed to a method of providing a host cell already stressed by a disrupted pen gene function which has interacted with and produced a sensitized Notch or APP, thus producing a change therein and detecting that change so as to identify a modulator thereof. Clearly there are differences in the method steps as well as what is being acted on. As noted in the previous petition decision, claim 1 clearly requires the presence of pen polypeptide whereas claim 43, now replaced by claim 69, does not. Claim 1 is to a process of causing disruption or inducing stress whereas claim 43, now 69, is to a previously stressed cell and is to detecting a modulator whereas no modulator is encompassed in claim 1. The manner of inducing stress in claim 1 is not defined except by its causation of a functional interaction with a **pen polypeptide** nor is the cause of the stress which disrupts the **pen gene function** indicated in claim 69. Causing

stress by functional interaction cannot be construed as necessarily causing disruption of a gene function. The reverse is also true. Further, claim 1 is directed to detecting an interaction of pen polypeptide with Notch or APP processing whereas claim 69 is to detecting a change in a value with respect to Notch or APP processing and does not require pen polypeptide to effect such change. Although applicants claim that the newly presented claims are within the scope of the original claims it is clear that they are not. Nor can any of the original dependent claims, either elected or non-elected, be construed so as to support the scope of claim 69 (or of earlier claim 43). Had applicants presented such claims (i.e. - claim 43+) prior to first Office action (September 28, 2001) which occurred more than 16 months after filing of the application, such claims would have been considered in the first Office action and been subject to restriction in the same manner as all of the other claims. To present a new set of claims subsequent to the first Office action directed to a different invention than the one apparently elected, even though the invention may be supported by the disclosure, and expect that they will be examined, is not acceptable prosecution practice.

Nonetheless, in the interest of advancing prosecution in this application, and since there has not been an action on the merits of any claim, the examiner will be directed to fully consider claims 69-92 presented in the last amendment (June 24, 2002) and take appropriate action thereon. Such action may take the form of a further restriction or election of species requirement, if warranted, as these claims are considered to be a new set of claims not directed to an invention(s) set forth in the originally presented claims. Applicants are advised, however, that a further attempt to amend the presently pending claims upon issuance of the next Office action so as to claim an invention(s) different from the one(s) now claimed may be considered non-responsive.

DECISION

The petition is **GRANTED** to the extent indicated above..

JCC **The application will be forwarded to the examiner for action [redacted] not inconsistent with this decision.**

Should there be any questions with respect to this decision, please contact William R. Dixon, Jr., by mail addressed to: Director, Technology Center 1600, Washington, D.C. 20231, or by telephone at (703)308-3824 or by facsimile transmission at (703) 305-7230.

Jasemine C. Chambers

Jasemine C. Chambers
Director, Technology Center 1600

PTO/SB/66 (03-09)
Approved for use through 03/31/2012. OMB 0651-0016
U.S. Patent and Trademark Office: U.S. DEPARTMENT OF COMMERCE
Under the Paperwork Reduction Act of 1995, no persons are required to respond to a collection of information unless it displays valid OMB control number.

PETITION TO ACCEPT UNINTENTIONALLY DELAYED PAYMENT OF MAINTENANCE FEE IN AN EXPIRED PATENT (37 CFR 1.378(c))

Patent Number	Issue Date (YYYY-MM-DD)	Application Number	Filing Date (YYYY-MM-DD)	Docket Number (if applicable)
6,683,628	2004-01-27	09/568,982	2000-05-11	TAUT-0001-DIV1

CAUTION: Maintenance fee (and surcharge, if any) payment must correctly identify: (1) the patent number and (2) the application number of the actual U.S. application leading to issuance of that patent to ensure the fee(s) is/are associated with the correct patent. 37 CFR 1.366(c) and (d).

SMALL ENTITY
☒ Patentee claims, or has previously claimed, small entity status. See 37 CFR 1.27.

LOSS OF ENTITLEMENT TO SMALL ENTITY STATUS
☐ Patentee is no longer entitled to small entity status. See 37 CFR 1.27(g)

NOT Small Entity			Small Entity		
	Fee	Code		Fee	Code
○	3 ½ year	(1551)	◉	3 ½ year	(2551)
○	7 ½ year	(1552)	○	7 ½ year	(2552)
○	11 ½ year	(1553)	○	11 ½ year	(2553)

SURCHARGE
The surcharge required by 37 CFR 1.20(i)(2) (Fee Code 1558) must be paid as a condition of accepting unintentionally delayed payment of the maintenance fee.

MAINTENANCE FEE (37 CFR 1.20(e)-(g))
The appropriate maintenance fee must be submitted with this petition.

STATEMENT
THE UNDERSIGNED CERTIFIES THAT THE DELAY IN PAYMENT OF THE MAINTENANCE FEE TO THIS PATENT WAS UNINTENTIONAL

PETITIONER(S) REQUEST THAT THE DELAYED PAYMENT OF THE MAINTENANCE FEE BE ACCEPTED AND THE PATENT REINSTATED

THIS PORTION MUST BE COMPLETED BY THE SIGNATORY OR SIGNATORIES

37 CFR 1.378(d) states: "Any petition under this section must be signed by an attorney or agent registered to practice before the Patent and Trademark Office, or by the patentee, the assignee, or other party in interest."

I certify, in accordance with 37 CFR 1.4(d)(4) that I am

◉ An attorney or agent registered to practice before the Patent and Trademark Office

○ A sole patentee

○ A joint patentee; I certify that I am authorized to sign this submission on behalf of all the other patentees.

○ A joint patentee; all of whom are signing this e-petition

○ The assignee of record of the entire interest

Patent Practitioner			
A signature of the applicant or representative is required in accordance with 37 CFR 1.33 and 10.18. Please see 37 CFR 1.4(d) for the form of the signature			
Signature	/Steven B. Kelber/	Date (YYYY-MM-DD)	2009-06-25
Name	Steven B. Kelber	Registration Number	30073

This collection of information is required by 37 CFR 1.378(c). The information is required to obtain or retain a benefit by the public which is to file (and by the USPTO to process) an application. Confidentiality is governed by 35 U.S.C. 122 and 37 CFR 1.11 and 1.14. This collection is estimated to take 1 hour to complete, including gathering, preparing, and submitting the completed application form to the USPTO. Time will vary depending upon the individual case. Any comments on the amount of time you require to complete this form and/ or suggestions for reducing this burden, should be sent to the Chief Information Officer, U.S. Patent and Trademark Office, U.S. Department of Commerce, P.O. Box 1450, Alexandria, VA 22313-1450. DO NOT SEND FEES OR COMPLETED FORMS TO THIS ADDRESS. **This form can only be used when in conjunction with EFS-Web. If this form is mailed to the USPTO, it may cause delays in reinstating the patent.**

Privacy Act Statement

The Privacy Act of 1974 (P.L. 93-579) requires that you be given certain information in connection with your submission of the attached form related to a patent application or patent. Accordingly, pursuant to the requirements of the Act, please be advised that: (1) the general authority for the collection of this information is 35 U.S.C. 2(b)(2); (2) furnishing of the information solicited is voluntary; and (3) the principal purpose for which the information is used by the U.S. Patent and Trademark Office is to process and/or examine your submission related to a patent application or patent. If you do not furnish the requested information, the U.S. Patent and Trademark Office may not be able to process and/or examine your submission, which may result in termination of proceedings or abandonment of the application or expiration of the patent.

The information provided by you in this form will be subject to the following routine uses:

1. The information on this form will be treated confidentially to the extent allowed under the Freedom of Information Act (5 U.S.C. 552) and the Privacy Act (5 U.S.C. 552a). Records from this system of records may be disclosed to the Department of Justice to determine whether the Freedom of Information Act requires disclosure of these records.

2. A record from this system of records may be disclosed, as a routine use, in the course of presenting evidence to a court, magistrate, or administrative tribunal, including disclosures to opposing counsel in the course of settlement negotiations.

3. A record in this system of records may be disclosed, as a routine use, to a Member of Congress submitting a request involving an individual, to whom the record pertains, when the individual has requested assistance from the Member with respect to the subject matter of the record.

4. A record in this system of records may be disclosed, as a routine use, to a contractor of the Agency having need for the information in order to perform a contract. Recipients of information shall be required to comply with the requirements of the Privacy Act of 1974, as amended, pursuant to 5 U.S.C. 552a(m).

5. A record related to an International Application filed under the Patent Cooperation Treaty in this system of records may be disclosed, as a routine use, to the International Bureau of the World Intellectual Property Organization, pursuant to the Patent Cooperation Treaty.

6. A record in this system of records may be disclosed, as a routine use, to another federal agency for purposes of National Security review (35 U.S.C. 181) and for review pursuant to the Atomic Energy Act (42 U.S.C. 218(c)).

7. A record from this system of records may be disclosed, as a routine use, to the Administrator, General Services, or his/her designee, during an inspection of records conducted by GSA as part of that agency's responsibility to recommend improvements in records management practices and programs, under authority of 44 U.S.C. 2904 and 2906. Such disclosure shall be made in accordance with the GSA regulations governing inspection of records for this purpose, and any other relevant (i.e., GSA or Commerce) directive. Such disclosure shall not be used to make determinations about individuals.

8. A record from this system of records may be disclosed, as a routine use, to the public after either publication of the application pursuant to 35 U.S.C. 122(b) or issuance of a patent pursuant to 35 U.S.C. 151. Further, a record may be disclosed, subject to the limitations of 37 CFR 1.14, as a routine use, to the public if the record was filed in an application which became abandoned or in which the proceedings were terminated and which application is referenced by either a published application, an application open to public inspections or an issued patent.

9. A record from this system of records may be disclosed, as a routine use, to a Federal, State, or local law enforcement agency, if the USPTO becomes aware of a violation or potential violation of law or regulation.

UNITED STATES PATENT AND TRADEMARK OFFICE

Commissioner for Patents
United States Patent and Trademark Office
P.O. Box 1450
Alexandria, VA 22313-1450
www.uspto.gov

In re Patent No. 6683628
Issue Date: January 27,2004
Application No. 09568982
Filed: May 11,2000
Attorney Docket No. JEL 30383A

:DECISION GRANTING PETITION
:UNDER 37 CFR 1.378(c)

This is a decision on the electronic petition, filed June 25,2009 ,under 37 CFR 1.378(c) to accept the unintentionally delayed payment of the 3.5 year maintenance fee for the above-identified patent.

The petition is **GRANTED**.

The maintenance fee is accepted, and the above-identified patent reinstated as of June 25,2009 .
This decision also constitutes notice that the fee has been accepted. An electronic copy of the petition and this decision has been created as an entry in the Image File Wrapper. Nevertheless, petitioner should print and retain an independent copy.

Telephone inquiries related to this electronic decision should be directed to the Electronic Business Center at 1-866-217-9197.

UNITED STATES PATENT AND TRADEMARK OFFICE

COMMISSIONER FOR PATENTS
UNITED STATES PATENT AND TRADEMARK OFFICE
P.O. BOX 1450
ALEXANDRIA, VA 22313-1450
www.uspto.gov

Paper No. 21

Fisher, Christen & Sabol
Suite 1108
1725 K Street NW
Washington DC 20006

COPY MAILED

AUG 25 2003

OFFICE OF PETITIONS

In re Application of Yves Bessard, et al. Application No. 09/568,993 Filed: May 11, 2000 Attorney Docket No. L.P.1712.2	: : : : :	ON PETITION

This is a decision on the petition under 37 CFR 1.137(b), filed August 14, 2003, to revive the above-identified application.

The petition is GRANTED.

The above-identified application became abandoned for failure to reply in a timely manner to the non-final Office action mailed April 23, 2002, which set a shortened statutory period for reply of three(3) months. A two(2) months extension of time under the provisions of 37 CFR 1.136(a) was obtained. Accordingly, the above-identified application became abandoned on September 24, 2002.

Telephone inquiries concerning this decision should be directed to Cheryl Gibson-Baylor at (703)308-5111, or in her absence, Frances Hicks at (703)305-8680.

The application file is being forwarded to Technology Center 1600, Art Unit 1625.

Cheryl Gibson-Baylor
Petitions Examiner
Office of Petitions
Office of the Deputy Commissioner
for Patent Examination Policy

Frances Hicks
Petitions Examiner

UNITED STATES PATENT AND TRADEMARK OFFICE

Commissioner for Patents
United States Patent and Trademark Office
P.O. Box 1450
Alexandria, VA 22313-1450
www.uspto.gov

MAILED FROM
DIRECTORS OFFICE

JUL 18 2006

TECHNOLOGY CENTER 2800

Sughrue Mion Zinn MacPeak & Seas PLLC
2100 Pennsylvania Avenue NW
Washington, DC 20037

In re Application of:	:	
Christopher John Rourk	:	
Serial No.: 09/569,024	:	DECISION ON PETITION
Filed: May 11, 2000	:	TO EXPUNGE
Attorney Docket No.: **Q59189**	:	

This is a decision on the petition filed May 26, 2004, to expunge information submitted under to 37 C.F.R. § 1.59(b), and M.P.E.P. § 724.05(I).

The petition is DENIED.

According to M.P.E.P. § 724.05 (I), if a petition to expunge is not filed prior to the mailing of a notice of allowability or a notice of abandonment for original and reissue applications, or prior to the mailing of a NIRC for reexamination proceedings, any material then in the file will remain therein and be open to the public in accordance with 37 CFR 1.14.

This petition was filed almost four years after the July 14, 2000 filing of the Information Disclosure Statement, and almost two months after the March 29, 2004 mailing of a notice of allowability in the above identified application.

Accordingly, the petition is denied. The material will remain in the file.

Inquiries related to this decision should be directed to Clayton E. LaBalle at (571) 272-1594.

Janice A. Falcone

Janice A. Falcone, Director
Technology Center 2800
Semiconductors, Electrical and Optical
Systems and Components

UNITED STATES PATENT AND TRADEMARK OFFICE

Commissioner for Patents
United States Patent and Trademark Office
P.O. Box 1450
Alexandria, VA 22313-1450
www.uspto.gov

WELSH & KATZ, LTD.
120 S. RIVERSIDE PLAZA
22ND FLOOR
CHICAGO, IL 60606

COPY MAILED

JUL 2 6 2004

OFFICE OF PETITIONS

In re Application of
Bedell et al.
Application No. 09/569,034
Filed: May 11, 2000
Attorney Docket No. MON-121.2

ON PETITION

This is a decision on the petition under 37 C.F.R. § 1.137(b), filed June 28, 2004, to revive the above-identified application.

The petition is **GRANTED.**

This application became abandoned for failure to timely reply within three months to the final Office action mailed December 3, 2003. A three-month extension of time under the provisions of 37 CFR 1.136(a) was obtained. Accordingly, this application became abandoned on June 4, 2004.

Petitioner has met the requirements to revive the above-identified application pursuant to 37 CFR 1.137(b).

On June 17, 2004, the correspondence address on the above-identified application was changed, although a review of the application does not disclose any documentation requesting it to be done. If the address change was done in error, petitioner should submit the enclosed Change of Correspondence Address form. A courtesy copy of this decision will be mailed to the address listed on the petition.

The file is now being forwarded to Technology Center 1600 for processing of the Request for Continued Examination under 37 CFR 1.114 filed with the instant petition.

Telephone inquiries should be directed to the undersigned at (703) 306-0482.

Liana Chase
Petitions Examiner
Office of Petitions
Office of the Deputy Commissioner
for Patent Examination Policy

cc: LYDIA N. NENOW
HARNESS, DICKEY & PIERCE, P.L.C.
7700 BOHNOMME, SUITE 400
ST. LOUIS, MO 63105

Enclosure: PTO/SB/122 – Change of Correspondence Address form

United States Patent and Trademark Office

Under Secretary of Commerce for Intellectual Property and
Director of the United States Patent and Trademark Office
Washington, D.C. 20231
www.uspto.gov

Paper No. 13

NEEDLE & ROSENBERG PC
127 PEACHTREE STREET NE
ATLANTA GA 30303-1811

COPY MAILED

JUL 0 8 2002

OFFICE OF PETITIONS

In re Application of
Anil V. Nadkarni et al
Application No. 09/569,060
Filed: May 10, 2000
Attorney Docket No. 04110.0012U2

: DECISION ON PETITION
: UNDER 37 CFR 1.78(a)(3)

This is a decision on the petition under 37 CFR 1.78(a)(3), filed June 6, 2002, to accept an unintentionally delayed claim under 35 U.S.C. §120 for the benefit of a prior-filed nonprovisional application.

The petition is **dismissed** as moot for the reason stated below.

The petition under 37 CFR 1.78(a)(3) requests the acceptance of an unintentionally delayed priority claim for the benefit of prior-filed application, Application No. 08/678,776 (now U.S. Patent No. 6,074,454), filed July 11, 1996.

A petition for acceptance of a claim for late priority under this section is only applicable to those applications filed on or after November 29, 2000. See 57024 Federal Register/Vol. 65, No. 183/Wednesday, September 20, 2000. Therefore, since this application was filed prior to the November 29, 2000 effective date, the petition is dismissed as involving a moot issue.

In view of the above, the $1,280 petition fee submitted is unnecessary. The $1,280 petition fee submitted will be credited to Deposit Account No. 14-0629.

Additionally, it is noted that the above petition referenced a filing date of **March 31, 2000** and a title of **JACKETED FRANGIBLE BULLETS**, whereas the recorded filing date is **May 10, 2000**, and the title is **LEAD-FREE FRANGIBLE BULLETS AND PROCESS FOR MAKING SAME.**

Any inquiries concerning this decision may be directed to Karen Creasy at undersigned at (703) 305-8859.

This application is being forwarded to Technology Center Art Unit 1742.

Frances Hicks
Lead Petitions Examiner
Office of Petitions
Office of the Deputy Commissioner
for Patent Examination Policy

UNITED STATES PATENT AND TRADEMARK OFFICE

Commissioner for Patents
United States Patent and Trademark Office
P.O. Box 1450
Alexandria, VA 22313-1450
www.uspto.gov

LEVINE BAGADE HAN LLP
2483 EAST BAYSHORE ROAD, SUITE 100
PALO ALTO CA 94303

COPY MAILED
DEC 18 2006
OFFICE OF PETITIONS

In re Application of	:	
OWENS, et al.	:	
Application No. 09/569,097	:	DECISION ON PETITION
Filed: May 10, 2000	:	TO WITHDRAW
Attorney Docket No. PORTNZ00301	:	FROM RECORD
	:	

This is a decision on the Request to Withdraw as attorney or agent of record under 37 C.F.R. § 1.36(b), filed October 05, 2006.

The request is **APPROVED**.

A grantable request to withdraw as attorney/agent of record must be signed by every attorney/agent seeking to withdraw or contain a clear indication that one attorney is signing on behalf of another/others. A request to withdraw will not be approved unless at least 30 (thirty) days would remain between the date of approval and the later of the expiration date of a time to file a response or the expiration date of the maximum time period which can be extended under 37 C.F.R. § 1.136(a).

The request was signed by David A. Levine on behalf of all attorneys of record who are associated with Customer No. 40518. All attorneys/agents associated with the Customer No. 40518 have been withdrawn.

Applicant is reminded that there is no attorney of record at this time.

The request to change the correspondence of record is not acceptable as the requested correspondence address is not that of: (1) the first named signing inventor; or (2) an intervening assignee of the entire interest under 37 C.F.R 3.71. All future communications from the Office will be directed to the first named signing inventor at the first copied address below until otherwise properly notified by the applicant.

There is no outstanding Office action that requires a reply from the applicant.

Telephone inquiries concerning this decision should be directed to the undersigned at 571-272-6825.

Patricia Volpe
Petitions Examiner
Office of Petitions

cc: GARY L. OWENS
565 HOPE STREET
MOUNTAIN VIEW, CA 94041

cc: WILLIAM SHAFFER, ESQ.
TOWNSEND AND TOWNSEND AND CREW LLP
279 LYTTON AVENUE
PALO ALTO, CA 94301

UNITED STATES PATENT AND TRADEMARK OFFICE

COMMISSIONER FOR PATENTS
UNITED STATES PATENT AND TRADEMARK OFFICE
WASHINGTON, D.C. 20231
www.uspto.gov
AHB 12-02

Paper No. 20

SUE Z. SHAPER, P.C.
2925 BRIARPARK
SUITE 930
HOUSTON, TX 77042

COPY MAILED

DEC 17 2002

OFFICE OF PETITIONS

In re Application of :
Daspit, et al. :
Application No. 09/569,178 :
Filed: May 11, 2000 : ON PETITION
Attorney Docket No. 44099 :
For: PORTABLE WALL-ATTACHABLE FIRE :
FIGHTING APPARATUS AND METHOD :

This decision is response to the petition under 37 CFR 1.181 filed September 17, 2002 to withdraw the holding of abandonment for the above-identified application.

The petition under 37 CFR 1.181 is **GRANTED**.

The application was held abandoned April 11, 2002 for failure to timely submit a proper reply to the final Office action mailed January 10, 2002. The final Office action set a three (3) month shortened statutory period of time for reply. Notice of Abandonment was mailed September 9, 2002.

Petitioner alleges non-receipt of the final Office action and further alleges that the Office utilized the wrong correspondence address in communicating with applicant. Petitioner indicates that a change of correspondence address was submitted December 22, 2000 by way of a Request for Customer Number Data Change. Petitioner also indicates a Notice of Customer Number Record Change was mailed by the Office on December 26, 2000. Petitioner indicates that the change of correspondence address was not reflected on the Office action mailed April 25, 2001 and therefore petitioner included second notice of change of correspondence in a response to an Office action mailed June 15, 2001.

Petitioner has included evidence substantiating these facts including a copy of the Request for Customer Number Data Change, a copy of the Notice of Customer Number Record Change, a copy of the response to the Office action mailed June 15, 2001, as well as copies docketing records and file jackets to establish that the final Office action was not received.

In the absence of any irregularity in the mailing of the Notice, there is a strong presumption that the Notice was properly mailed

to practitioner at the address of record. This presumption may be overcome by a showing that the Notice was not in fact received. The showing required to establish non-receipt of an Office communication must include a statement from the practitioner stating that the Office communication was not received by the practitioner and attesting to the fact that a search of the file jacket and docket records indicates that the Office communication was not received. A copy of the docket record where the non-received Office communication would have been entered had it been received and docketed must be attached to and referenced in practitioner's statement. *See*, MPEP 711.03(c). The showing outlined above may not be sufficient if there are circumstances that point to a conclusion that the Office communication may have been lost after receipt rather than a conclusion that the Office communication was lost in the mail.

Petitioner has established that the Office action was improperly mailed to practitioner of record at the incorrect correspondence address. Hence, there was an irregularity in mailing the Notice on the part of the United States Patent and Trademark Office.

In view of the evidence provided by petitioner, the Notice of Abandonment is hereby VACATED and the Notice of Abandonment is WITHDRAWN.

No fee is due in connection with this matter.

Petitioner is advised that the proper correspondence address has been entered into the record.

This application is being forwarded to Technology Center 3700 for re-mailing of the final Office action.

Telephone inquiries concerning this matter may be directed to the undersigned at (703) 305-0310.

Alesia M. Brown

Alesia M. Brown
Petitions Attorney
Office of Petitions
Office of the Deputy Commissioner
for Patent Examination Policy

UNITED STATES PATENT AND TRADEMARK OFFICE

Commissioner for Patents
United States Patent and Trademark Office
Washington, D.C. 20231
www.uspto.gov

Paper No. 5

COPY MAILED

NOV 0 8 2000

OFFICE OF PETITIONS
A/C PATENTS

HUGH A ABRAMS
SIDLEY & AUSTIN
BANK ONE PLAZA
10 SOUTH DEARBORN STREET
CHICAGO , IL 60603

In re Application of
HOFFMAN, PETER F., *et al.*
Application No. 09/569,213
Filed: 05/11/2000
For: SYSTEM FOR MONITORING REGULATION OF PAHRMACEUTICALS FROM DATA STRUCTURE OF MEDICAL AND LABORATORY RECORDS

: DECISION REFUSING STATUS
: UNDER 37 C.F.R. §1.47(a)

This is in response to the Petition Under 37 C.F.R. §1.47(a) filed on September 6, 2000.

HISTORY

The above-identified application was filed on May 11, 2000 naming Peter F. Hoffman, Monique Parr, and Aida Leroy as joint inventors. However, the declaration was not signed by inventor Leroy. Accordingly, a notice to file missing parts (hereinafter "the notice") was mailed to the address of record on July 18, 2000. Petitioner filed a reply to the notice on September 6, 2000.

LAW

§ 1.47 Filing when an inventor refuses to sign or cannot be reached.

> (a) If a joint inventor refuses to join in an application for patent or cannot be found or reached after diligent effort, the application may be made by the other inventor on behalf of himself or herself and the nonsigning inventor. The oath or declaration in such an application must be accompanied by a petition including proof of the pertinent facts, the fee set forth in §1.17(l) and the last known address of the nonsigning inventor. The Patent and Trademark Office shall, except in a continued prosecution application under §1.53(d), forward notice of the filing of the application to the nonsigning inventor at said address and publish notice of the filing of the application in the Official Gazette. The nonsigning inventor may subsequently join in the application on filing an oath or declaration complying with §1.63.

ANALYSIS

As noted in the rule above, proof of the pertinent facts surrounding Petitioner's inability to locate absent joint inventor(s) must be supplied with a petition under Rule 1.47. In this instance, Petitioner's proof consists of the allegation that "Dr. Leroy has refused to return an executed Declaration and assignment for the invention."

Petitioner is urged to note the M.P.E.P. 409.03(d) (Proof of Unavailability or Refusal), which states:

> "Where inability to find or reach a nonsigning inventor 'after diligent effort' is the reason for filing under 37 CFR 1.47, an affidavit or declaration of facts

> should be submitted that fully describes the exact facts which are relied on to establish that a diligent effort was made...[t]he affidavit or declaration of facts must be signed, where at all possible, by a person having firsthand knowledge of the facts recited therein. Statements based on hearsay will not normally be accepted. Copies of documentary evidence such as certified mail return receipt, cover letter of instructions, telegrams, etc., that support a finding that the nonsigning inventor could not be found or reached should be made part of the affidavit or declaration. It is important that the affidavit or declaration contain statements of fact as opposed to conclusions." *Emphasis added.*

Given the above reference, it appears that Petitioner's petition lacks an adequate showing that the nonsigning inventor has refused to sign the declaration after being presented with a copy of said application. Therefore, Petitioner has not satisfied the requirement of Rule 1.47 of supplying a declaration "accompanied by a petition including proof of the pertinent facts."[1]

This petition is accordingly *dismissed.*

Further correspondence with respect to this matter should be addressed as follows:

By mail: Assistant Commissioner for Patents
Box DAC
Washington, D.C. 20231

By FAX: (703) 308-6916
Attn: Special Program Law Office

By hand: Crystal Plaza Four, Suite 3C23
2201 S. Clark Place
Arlington, VA

Telephone inquiries related to this decision should be directed to Petitions Attorney Scott Ledford at (703) 306-5593.

Office of Petitions
Office of the Deputy Assistant Commissioner
for Patent Policy and Projects

[1] 37 C.F.R. §1.47(a).

UNITED STATES PATENT AND TRADEMARK OFFICE

Commissioner for Patents
United States Patent and Trademark Office
Washington, D.C. 20231
www.uspto.gov

Paper No. 7

COPY MAILED

APR 0 2 2001

OFFICE OF PETITIONS
A/C PATENTS

HUGH A ABRAMS
SIDLEY & AUSTIN
BANK ONE PLAZA
10 SOUTH DEARBORN STREET
CHICAGO , IL 60603

In re Application of
HOFFMAN, PETER F., *et al.*
Application No. 09/569,213
Filed: 05/11/2000
For: SYSTEM FOR MONITORING REGULATION OF PAHRMACEUTICALS FROM DATA STRUCTURE OF MEDICAL AND LABOTORY RECORDS

DECISION REFUSING STATUS UNDER 37 C.F.R. §1.47(a)

This is in response to the renewed Petition Under 37 C.F.R. §1.47(a) filed on January 23, 2001.

HISTORY

The above-identified application was filed on May 11, 2000 naming Peter F. Hoffman, Monique Parr, and Adia Leroy as joint inventors. However, the declaration was not signed by co-inventor Leroy. Accordingly, a notice to file missing parts (hereinafter "the notice") was mailed to the address of record on July 18, 2000. Petitioner filed a petition under 37 C.F.R. §1.47(a) September 6, 2000.[1] However, that petition was dismissed in a decision dated November 8, 2000 for failure to provide an adequate showing. Petitioner responded with this renewed petition on January 23, 2001.

LAW

§ 1.47 Filing when an inventor refuses to sign or cannot be reached.

(a) If a joint inventor refuses to join in an application for patent or cannot be found or reached after diligent effort, the application may be made by the other inventor on behalf of himself or herself and the nonsigning inventor. The oath or declaration in such an application must be accompanied by a petition including proof of the pertinent facts, the fee set forth in §1.17(l) and the last known address of the nonsigning inventor. The Patent and Trademark Office shall, except in a continued prosecution application under §1.53(d), forward notice of the filing of the application to the nonsigning inventor at said address and publish notice of the filing of the application in the Official Gazette. The nonsigning inventor may subsequently join in the application on filing an oath or declaration complying with §1.63.

§ 1.181 Petition to the Commissioner.

(a) ...

[1] That petition (as well as this one) was captioned as a petition under 37 C.F.R. §1.47(b). Given the facts presented, both petitions are properly treated under 37 C.F.R. §1.47(a) instead.

(b) ...

(c) ...

(d) ...

(e) ...

(f) The mere filing of a petition will not stay any period for reply that may be running against the application, nor act as a stay of other proceedings. Any petition under this part not filed within two months of the mailing date of the action or notice from which relief is requested may be dismissed as untimely, except as otherwise provided. This two-month period is not extendable.

ANALYSIS

Effective November 7, 2000, 37 C.F.R. §1.181(f) now mandates that Petitioner had two months from the mail date of the decision dismissing the original petition to file this petition. The decision on the petition of September 11, 2000 was mailed on November 8, 2000. This means that Petitioner had until January 8, 2001 to file this renewed petition. Unfortunately, Petitioner filed this petition on January 23, 2001, which is two weeks past the two month deadline set in rule 1.181. Therefore, absent a showing of why this deadline should be extended, contrary to the rule 1.181(f) mandate that the period for response is not extendable, *this petition must be* ***dismissed as untimely***.

Any request for reconsideration of this decision must be submitted within TWO (2) MONTHS from the mail date of this decision. Any such petition should be submitted under 37 C.F.R. §1.183 as a petition for the suspension of the rules.

Further correspondence with respect to this matter should be addressed as follows:

By mail: Assistant Commissioner for Patents
Box DAC
Washington, D.C. 20231

By FAX: (703) 308-6916
Attn: Special Program Law Office

By hand: Crystal Plaza Four, Suite 3C23
2201 S. Clark Place
Arlington, VA

Telephone inquiries related to this decision should be directed to Petitions Attorney Scott Ledford at (703) 306-5593.

Beverly Flanagan
Supervisory Petitions Examiner
Office of Petitions
Office of the Deputy Assistant Commissioner
for Patent Policy and Projects

UNITED STATES PATENT AND TRADEMARK OFFICE

Commissioner for Patents
United States Patent and Trademark Office
Washington, D.C. 20231
www.uspto.gov

Paper No. 10

HUGH A ABRAMS
SIDLEY & AUSTIN
BANK ONE PLAZA
10 SOUTH DEARBORN STREET
CHICAGO , IL 60603

COPY MAILED

AUG 1 3 2001

OFFICE OF PETITIONS

In re Application of
HOFFMAN, PETER F., *et al.*
Application No. 09/569,213
Filed: 05/11/2000
For: SYSTEM FOR MONITORING REGULATION OF PAHRMACEUTICALS FROM DATA STRUCTURE OF MEDICAL AND LABORATORY RECORDS

DECISION REFUSING STATUS UNDER 37 C.F.R. §1.47(a)

This is in response to the petitions under 37 C.F.R. §§1.183 and 1.47(a) filed (May 24, 2001) and 37 C.F.R. §1.47(a) (filed January 23, 2001).

HISTORY

The above-identified application was filed on May 24, 2001 naming Peter F. Hoffman, Monique Parr, and Aida A. Leroy as joint inventors. However, the declaration was not signed by inventor Leroy. Accordingly, a notice to file missing parts (hereinafter "the notice") was mailed to the address of record on July 18, 2000. A two month deadline was set for replying.

On September 11, 2000, Petitioner timely filed a response consisting of the late filing surcharge and a petition under 37 C.F.R. §1.47(a).[1] However, that petition was dismissed on November 8, 2000 due to lack of a proper showing that the non-signor had refused to sign the application papers. A two month deadline was set by rule (effective November 7, 2000) for filing a request for reconsideration.

Petitioner filed another petition on January 23, 2001, again under 37 C.F.R. §1.47(a).[2] In a decision dated April 2, 2001, the petition was dismissed, citing the rule change to 37 C.F.R. §1.181(f) effective November 7, 2000. A two month deadline was set for replying.

Petitioner timely filed with the May 24, 2001 filing of a petition to waive the rules under 37 C.F.R. §1.183.

LAW

§ 1.47 Filing when an inventor refuses to sign or cannot be reached.

> (a) If a joint inventor refuses to join in an application for patent or cannot be found or reached after diligent effort, the application may be made by the other inventor on behalf of himself or herself and the nonsigning inventor. The oath or

---

[1] Petitioner captioned this a petition under rule 1.47(b). However, that is improper, since the signature of only one of three inventors is missing.

[2] Petitioner again captioned his a petition under rule 1.47(b), although as explained in the prior footnote and in the prior decision, that is improper, since the signature of only one of three inventors is missing.

> declaration in such an application must be accompanied by a petition including proof of the pertinent facts, the fee set forth in §1.17(l) and the last known address of the nonsigning inventor. The Patent and Trademark Office shall, except in a continued prosecution application under §1.53(d), forward notice of the filing of the application to the nonsigning inventor at said address and publish notice of the filing of the application in the Official Gazette. The nonsigning inventor may subsequently join in the application on filing an oath or declaration complying with §1.63.

37 C.F.R. §1.181 Petition to the Commissioner.

(f) The mere filing of a petition will not stay any period for reply that may be running against the application, nor act as a stay of other proceedings. Any petition under this part not filed within two months of the mailing date of the action or notice from which relief is requested may be dismissed as untimely, except as otherwise provided. This two-month period is not extendable.

37 C.F.R. §1.183 Suspension of rules.

In an extraordinary situation, when justice requires, any requirement of the regulations in this part which is not a requirement of the statutes may be suspended or waived by the Commissioner or the Commissioner's designee, *sua sponte*, or on petition of the interested party, subject to such other requirements as may be imposed. Any petition under this section must be accompanied by the petition fee set forth in § 1.17(h).

ANALYSIS

Petition under rule 1.183

Petitioner advances multiple arguments in his quest for a suspension of the rules. However, the merits of these arguments will not be reached because they are deemed moot.

The April 2, 2001 decision misapplied the rule, which by its language, applies only to petitions requesting relief from a previous notice or office action. The difference between a petition for reconsideration and a new petition is explained in *In re Rexamination of Sivertz*[3], where it was stated that:

> "a petition to the Commissioner that complains of his earlier decision is necessarily based on the action complained of in the earlier decision. If further evidencde is needed to support a request for reconsideration, it is manifest that a new petition (not a request for reconsideration) is involved."

In the current situation, the April 2, 2001 decision was addressing a petition filed to perfect the flaws in the September 11, 2000 petition that were singed out in the November 8, 2000 decision. Specifically, the flaw being addressed was a lack of a showing that the nonsignor had refused to sign the application papers after being presented with the opportunity to sign them. Thus, the January 23, 2001 petition submitted further evidence .needed to support a request for reconsideration. Under the above-quoted passage from Sivertz, that

[3] *Id.*

places the petition in the realm of being a new petition, rather than a petition for reconsideration.

Since there is no support in rule 1.181(f) for the imposition of a two month deadline for filing a new petition in response to a dismissal, the April 2, 2001 dismissal for untimeliness of Petitioner's January 23, 2001 petition was improper.

Accordingly, the April 2, 2001 decision is rescinded and this paper will treat the January 23, 2001 decision anew.

Petition under rule 1.47(a).

As noted in the rule above, proof of the pertinent facts surrounding Petitioner's inability to locate absent joint inventor(s) must be supplied with a petition under Rule 1.47. In this instance, Petitioner's proof consists of a letter mailed to the nonsignor requesting her signature of the declaration and assignment attahed to the letter.

Before a refusal can be alleged, it must be demonstrated that a *bona fide* attempt was made to present a copy of the application papers (specification, including claims, drawings, and oath or declaration) to the non-signing inventor for signature. A copy of the application papers should be sent to the last known address of the nonsigning inventor, or, if the nonsigning inventor is represented by counsel, to the address of the nonsigning inventor's attorney.

Petitioner has not successfully made that demonstration. Specifically, this petition is supported by a cover letter to the nonsigning inventor that states:

> "...the Company requests...that you execute the attached Declaration/Power of Attorney and Assignement."

No mention is made of the application having been delivered to the nonsignor. The only showing that this letter establishes is that the declaration and assignment papers were mailed to the nonsignor. Of course, the nonsignor cannot properly execute a declaration stating that he has reviewed and understands the contents of the application unless he has been presented with the opportunity to do so by being given a copy of the complete application (including specification, drawings, abstract, and claims). Absent a showing that he received a copy of the entire application, this petition cannot be granted.

This petition is accordingly ***dismissed***.

Any request for reconsideration of this decision must be submitted within TWO (2) MONTHS from the mail date of this decision. Extensions of time under 37 C.F.R. §1.136(a) are permitted. The reconsideration request should include a cover letter entitled "Renewed Petition under 37 C.F.R. §1.47(a)".

Further correspondence with respect to this matter should be addressed as follows:

By mail: Assistant Commissioner for Patents
Box DAC
Washington, D.C. 20231

By FAX: (703) 308-6916
Attn: Special Program Law Office

By hand: Crystal Plaza Four, Suite 3C23
2201 S. Clark Place
Arlington, VA

Telephone inquiries related to this decision should be directed to the undersigned at (703) 306-5593.

Scott M. Ledford
Petitions Attorney
Office of Petitions
Office of the Deputy Commissioner
for Patent Examination Policy

UNITED STATES PATENT AND TRADEMARK OFFICE

Under Secretary of Commerce for Intellectual Property and
Director of the United States Patent and Trademark Office
Washington, D.C. 20231
www.uspto.gov

Paper No. 16

James M. Hunter, Jr.
Merck & Co., Inc.
PO Box 2000-R460
Rahway, New Jersey 07065-0907

COPY MAILED

JAN 2 7 2003

OFFICE OF PETITIONS

In re Application of
Peter F. Hoffman et al.
Application No. 09/569,213
Filed: May 11, 2000
Attorney Docket No. MD005 (50193-010)

DECISION
ON PETITION
37 CFR 1.47

This is a decision on the renewed petition filed February 8, 2002, under 37 CFR 1.47(a).

The petition is GRANTED.

Petitioner has shown that the non-signing inventor has refused to join in the filing of the above-identified application.

The above-identified application and papers have been reviewed and found in compliance with 37 CFR 1.47(a). This application is hereby accorded Rule 1.47(a) status. As provided in Rule 1.47(a), this Office will forward notice of this application's filing to the non-signing inventor at the address given in the petition under 37 CFR 1.47(a) filed January 23, 2001, which is consistent with the address on the oath under 37 CFR 1.63 filed January 15, 2003. Notice of the filing of this application will also be published in the Official Gazette.

Petitioner's deposit account 50-0417 has been charged $110 and credited $390 for a total refund of $280, as detailed below: 1) The decision on petition mailed November 8, 2000 did not specify the two (2) month period for response causing petitioner to file anew a petition under 37 CFR 1.47, including the $130 petition fee, on January 23, 2001. Instead, petitioner should have obtained a one-month extension of time at $110 pursuant to 37 CFR 1.136(a). The decision on petition mailed April 2, 2001 dismissed the January 23, 2001 petition out of hand as an untimely petition under 37 CFR

1.181(f), causing petitioner to file anew petitions under 37 CFR §§ 1.47(a) and 1.183, including a $130 petition fee, on May 24, 2001. The decision on petitions mailed August 13, 2001 notes that the April 2, 2001 decision improperly treated the January 23, 2001 petition as one filed under 37 CFR 1.181(f). Therefore, the $130 fee accompanying the petition submitted May 24, 2001 was unnecessary and is being refunded, as noted above. In addition, the $130 fee accompanying the petition filed February 8, 2002 was also unnecessary and is being refunded to petitioner's deposit account.

This application is being forwarded to the Office of Initial Patent Examination for further processing.

Inquiries regarding this communication may be directed to B. Dayoan at (703) 308-3865 or, in her absence, to the undersigned at (703) 305-1820.

Brian Hearn

Brian Hearn
Senior Petitions Examiner
Office of Petitions
Office of the Deputy Commissioner
for Patent Examination Policy

Enclosure: Notice of Acceptance of Power of Attorney

UNITED STATES PATENT AND TRADEMARK OFFICE

COMMISSIONER FOR PATENTS
UNITED STATES PATENT AND TRADEMARK OFFICE
P.O. BOX 1450
ALEXANDRIA, VA 22313-1450
www.uspto.gov

Paper No. 8

COPY MAILED

AUG 2 0 2003

OFFICE OF PETITIONS

Lerner David Littenberg
Krumholz & Mentlik LLP
600 South Avenue West
Westfield, NJ 07090

In re Application of
Chenting Lin, et al.
Application No. 09/569,220
Filed: May 11, 2000
Attorney Docket No. 00P7628US

ON PETITION

This is a decision on the petition under 37 CFR 1.137(b), filed April 22, 2003 and supplemented on August 11, 2003, to revive the above-identified application.

The petition is GRANTED.

The above-identified application became abandoned for failure to reply in a timely manner to the Notice To File Missing Parts of NonProvisional Application mailed July 18, 2000. The Notice set a period for reply of two(2) months from the mail date of the Notice. No extensions of time under the provisions of 37 CFR 1.136(a) were obtained. Accordingly, the above-identified application became abandoned on September 19, 2000.

Telephone inquiries concerning this decision should be directed to Cheryl Gibson-Baylor at (703)308-5111, or in her absence, Sherry D. Brinkley at (703)305-9220.

The application file is being forwarded to the Initial Patent Examination Division for further processing using the declaration filed August 11, 2003.

Cheryl Gibson-Baylor
Petitions Examiner
Office of Petitions
Office of the Deputy Commissioner
for Patent Examination Policy

Sherry D. Brinkley
Petitions Examiner

SPE RESPONSE FOR CERTIFICATE OF CORRECTION

Paper No.: _____

DATE : March 2, 2006

TO SPE OF : ART UNIT 2154

SUBJECT : Request for Certificate of Correction on Patent No.: 6985,937/APPL. 09/569371

A response is requested with respect to the accompanying request for a certificate of correction.

Please complete this form and return with file, within **7** days to:

Palm location **7580, Certificates of Correction Branch – South Tower – 9A22**

If response is for an IFW, **return to employee (named below) via PUBSCofC Team in MADRAS.**

With respect to the change(s) requested, correcting Office and/or Applicant's errors, should the patent read as shown in the certificate of correction (COCIN)? No new matter should be introduced, nor should the scope or meaning of the claims be changed.

Magdalene Talley

Thank You For Your Assistance

Certificates of Correction Branch
Tel. No. 703-308-9309 ext. 116

The request for issuing the above-identified correction(s) is hereby:

Note your decision on the appropriate box.

- ☒ **Approved** — All changes apply.
- ☐ **Approved in Part** — Specify below which changes **do not** apply.
- ☐ **Denied** — State the reasons for denial below.

Comments:

JOHN FOLLANSBEE
SUPERVISORY PATENT EXAMINER
TECHNOLOGY CENTER 2100

SPE

2154

Art Unit

UNITED STATES PATENT AND TRADEMARK OFFICE

Commissioner for Patents
United States Patent and Trademark Office
P.O. Box 1450
Alexandria, VA 22313-1450
www.uspto.gov

In re Patent No. 6358413
Issue Date: March 19,2002
Application No. 09569374
Filed: May 11,2000
Attorney Docket No. 319108002US2

:
:DECISION GRANTING PETITION
:UNDER 37 CFR 1.378(c)
:

This is a decision on the electronic petition, filed March 19,2008 ,under 37 CFR 1.378(c) to accept the unintentionally delayed payment of the 3.5 year maintenance fee for the above-identified patent.

The petition is GRANTED.

The maintenance fee is accepted, and the above-identified patent reinstated as of March 19,2008 . This decision also constitutes notice that the fee has been accepted. An electronic copy of the petition and this decision has been created as an entry in an Image File Wrapper. Nevertheless, petitioner should print and retain an independent copy

Telephone inquires related to this electronic decision should be directed to the Electronic Business Center at 1-866-217-9197.

Under the Paperwork Reduction Act of 1995, no persons are required to respond to a collection of information unless it displays valid OMB control number.

PETITION TO ACCEPT UNINTENTIONALLY DELAYED PAYMENT OF MAINTENANCE FEE IN AN EXPIRED PATENT (37 CFR 1.378(c))

Patent Number	Issue Date (YYYY-MM-DD)	Application Number	Filing Date (YYYY-MM-DD)	Docket Number (if applicable)
6,358,413	2002-03-19	09/569,374	2000-05-11	

CAUTION: Maintenance fee (and surcharge, if any) payment must correctly identify: (1) the patent number and (2) the application number of the actual U.S. application leading to issuance of that patent to ensure the fee(s) is/are associated with the correct patent. 37 CFR 1.366(c) and (d).

SMALL ENTITY
☒ Patentee claims, or has previously claimed, small entity status. See 37 CFR 1.27.

LOSS OF ENTITLEMENT TO SMALL ENTITY STATUS
☐ Patentee is no longer entitled to small entity status. See 37 CFR 1.27(g)

NOT Small Entity		Small Entity	
Fee	Code	Fee	Code
○ 3 ½ year	(1551)	◉ 3 ½ year	(2551)
○ 7 ½ year	(1552)	○ 7 ½ year	(2552)
○ 11 ½ year	(1553)	○ 11 ½ year	(2553)

SURCHARGE
The surcharge required by 37 CFR 1.20(i)(2) (Fee Code 1558) must be paid as a condition of accepting unintentionally delayed payment of the maintenance fee.

MAINTENANCE FEE (37 CFR 1.20(e)-(g))
The appropriate maintenance fee must be submitted with this petition.

STATEMENT
THE UNDERSIGNED CERTIFIES THAT THE DELAY IN PAYMENT OF THE MAINTENANCE FEE TO THIS PATENT WAS UNINTENTIONAL

PETITIONER(S) REQUEST THAT THE DELAYED PAYMENT OF THE MAINTENANCE FEE BE ACCEPTED AND THE PATENT REINSTATED

THIS PORTION MUST BE COMPLETED BY THE SIGNATORY OR SIGNATORIES

37 CFR 1.378(d) states: "Any petition under this section must be signed by an attorney or agent registered to practice before the Patent and Trademark Office, or by the patentee, the assignee, or other party in interest."

I certify, in accordance with 37 CFR 1.4(d)(4) that I am

◉ An attorney or agent registered to practice before the Patent and Trademark Office

○ A sole patentee

○ A joint patentee; I certify that I am authorized to sign this submission on behalf of all the other patentees.

○ A joint patentee; all of whom are signing this e-petition

○ The assignee of record of the entire interest

Patent Practitioner			
A signature of the applicant or representative is required in accordance with 37 CFR 1.33 and 10.18. Please see 37 CFR 1.4(d) for the form of the signature			
Signature	/RGW/	Date (YYYY-MM-DD)	2008-03-19
Name	Robert G. Woolston	Registration Number	37263

This collection of information is required by 37 CFR 1.378(c). The information is required to obtain or retain a benefit by the public which is to file (and by the USPTO to process) an application. Confidentiality is governed by 35 U.S.C. 122 and 37 CFR 1.11 and 1.14. This collection is estimated to take 1 hour to complete, including gathering, preparing, and submitting the completed application form to the USPTO. Time will vary depending upon the individual case. Any comments on the amount of time you require to complete this form and/ or suggestions for reducing this burden, should be sent to the Chief Information Officer, U.S. Patent and Trademark Office, U.S. Department of Commerce, P.O. Box 1450, Alexandria, VA 22313-1450. DO NOT SEND FEES OR COMPLETED FORMS TO THIS ADDRESS. **This form can only be used when in conjunction with EFS-Web. If this form is mailed to the USPTO, it may cause delays in reinstating the patent.**

Privacy Act Statement

The Privacy Act of 1974 (P.L. 93-579) requires that you be given certain information in connection with your submission of the attached form related to a patent application or patent. Accordingly, pursuant to the requirements of the Act, please be advised that: (1) the general authority for the collection of this information is 35 U.S.C. 2(b)(2); (2) furnishing of the information solicited is voluntary; and (3) the principal purpose for which the information is used by the U.S. Patent and Trademark Office is to process and/or examine your submission related to a patent application or patent. If you do not furnish the requested information, the U.S. Patent and Trademark Office may not be able to process and/or examine your submission, which may result in termination of proceedings or abandonment of the application or expiration of the patent.

The information provided by you in this form will be subject to the following routine uses:

1. The information on this form will be treated confidentially to the extent allowed under the Freedom of Information Act (5 U.S.C. 552) and the Privacy Act (5 U.S.C. 552a). Records from this system of records may be disclosed to the Department of Justice to determine whether the Freedom of Information Act requires disclosure of these record s.

2. A record from this system of records may be disclosed, as a routine use, in the course of presenting evidence to a court, magistrate, or administrative tribunal, including disclosures to opposing counsel in the course of settlement negotiations.

3. A record in this system of records may be disclosed, as a routine use, to a Member of Congress submitting a request involving an individual, to whom the record pertains, when the individual has requested assistance from the Member with respect to the subject matter of the record.

4. A record in this system of records may be disclosed, as a routine use, to a contractor of the Agency having need for the information in order to perform a contract. Recipients of information shall be required to comply with the requirements of the Privacy Act of 1974, as amended, pursuant to 5 U.S.C. 552a(m).

5. A record related to an International Application filed under the Patent Cooperation Treaty in this system of records may be disclosed, as a routine use, to the International Bureau of the World Intellectual Property Organization, pursuant to the Patent Cooperation Treaty.

6. A record in this system of records may be disclosed, as a routine use, to another federal agency for purposes of National Security review (35 U.S.C. 181) and for review pursuant to the Atomic Energy Act (42 U.S.C. 218(c)).

7. A record from this system of records may be disclosed, as a routine use, to the Administrator, General Services, or his/her designee, during an inspection of records conducted by GSA as part of that agency's responsibility to recommend improvements in records management practices and programs, under authority of 44 U.S.C. 2904 and 2906. Such disclosure shall be made in accordance with the GSA regulations governing inspection of records for this purpose, and any other relevant (i.e., GSA or Commerce) directive. Such disclosure shall not be used to make determinations about individuals.

8. A record from this system of records may be disclosed, as a routine use, to the public after either publication of the application pursuant to 35 U.S.C. 122(b) or issuance of a patent pursuant to 35 U.S.C. 151. Further, a record may be disclosed, subject to the limitations of 37 CFR 1.14, as a routine use, to the public if the record was filed in an application which became abandoned or in which the proceedings were terminated and which application is referenced by either a published application, an application open to public inspections or an issued patent.

9. A record from this system of records may be disclosed, as a routine use, to a Federal, State, or local law enforcement agency, if the USPTO becomes aware of a violation or potential violation of law or regulation.

UNITED STATES PATENT AND TRADEMARK OFFICE

COMMISSIONER FOR PATENTS
UNITED STATES PATENT AND TRADEMARK OFFICE
P.O. BOX 1450
ALEXANDRIA, VA 22313-1450
www.uspto.gov

JOHN G. TOLOMEI, PATENT DEPARTMENT
UOP LLC
25 EAST ALGONQUIN ROAD
P O BOX 5017
DES PLAINES, IL 60017-5017

COPY MAILED
MAY 18 2004
OFFICE OF PETITIONS

In re Application of	:	
Harness, et al.	:	
Application No. 09/569,403	:	ON PETITION
Filed: May 12, 2000	:	
Attorney Docket No.: 104226	:	

This decision is in response to the petition under 37 CFR 1.137(b) filed March 11, 2004.

The petition is GRANTED.

This application became abandoned March 10, 2004 for failure to timely submit the issue fee, as required by the Notice of Allowance and Issue Fee Due ("Notice") mailed December 9, 2003. The Notice set a three month statutory period of time for reply. This decision precedes Notice of Abandonment.

A grantable petition pursuant to 37 C.F.R. § 1.137(b) must be accompanied by: (1) the required reply to the outstanding Office action or notice, unless previously filed; (2) the petition fee as set forth in 37 C.F.R. § 1.17(m); (3) a statement that the entire delay in filing the required reply from the due date for the reply until the filing of a grantable petition pursuant to 37 C.F.R. § 1.137(b) was unintentional; and (4)any terminal disclaimer (and fee set forth in 37 C.F.R. § 1.20(d)) required pursuant to 37 C.F.R. § 1.137(c).

The instant petition has been reviewed and found in compliance with the provisions of 37 CFR 1.137(b). Accordingly, the failure to timely submit issue fee is accepted as having been unintentionally delayed.

This application will be forwarded to publishing for processing into a patent.

Telephone inquiries regarding this decision should be directed to the undersigned at (703) 305-0310.

Alesia M. Brown
Senior Petitions Attorney
Office of Petitions

UNITED STATES PATENT AND TRADEMARK OFFICE

Commissioner for Patents
United States Patent and Trademark Office
P.O. Box 1450
Alexandria, VA 22313-1450
www.uspto.gov

In re Patent No. 6532857
Issue Date: March 18,2003
Application No. 09569429
Filed: May 12,2000
Attorney Docket No. MOSK-158

:

:DECISION GRANTING PETITION
:UNDER 37 CFR 1.378(c)

:

This is a decision on the electronic petition, filed September 14,2007,under 37 CFR 1.378(c) to accept the unintentionally delayed payment of the 3.5 year maintenance fee for the above-identified patent.

The petition is GRANTED.

The maintenance fee is accepted, and the above-identified patent reinstated as of September 14,2007. This decision also constitutes notice that the fee has been accepted. An electronic copy of the petition and this decision has been created as an entry in an Image File Wrapper. Nevertheless, petitioner should print and retain an independent copy

Telephone inquires related to this electronic decision should be directed to the Electronic Business Center at 1-866-217-9197.

Under the Paperwork Reduction Act of 1995, no persons are required to respond to a collection of information unless it displays valid OMB control number.

PETITION TO ACCEPT UNINTENTIONALLY DELAYED PAYMENT OF MAINTENANCE FEE IN AN EXPIRED PATENT (37 CFR 1.378(c))

Patent Number	Issue Date (YYYY-MM-DD)	Application Number	Filing Date (YYYY-MM-DD)	Docket Number (if applicable)
6532857	2003-03-18	09569429	2000-05-12	MOSK-158

CAUTION: Maintenance fee (and surcharge, if any) payment must correctly identify: (1) the patent number and (2) the application number of the actual U.S. application leading to issuance of that patent to ensure the fee(s) is/are associated with the correct patent. 37 CFR 1.366(c) and (d).

SMALL ENTITY
☐ Patentee claims, or has previously claimed, small entity status. See 37 CFR 1.27.

LOSS OF ENTITLEMENT TO SMALL ENTITY STATUS
☒ Patentee is no longer entitled to small entity status. See 37 CFR 1.27(g)

NOT Small Entity		Small Entity	
Fee	Code	Fee	Code
◉ 3 ½ year	(1551)	○ 3 ½ year	(2551)
○ 7 ½ year	(1552)	○ 7 ½ year	(2552)
○ 11 ½ year	(1553)	○ 11 ½ year	(2553)

SURCHARGE
The surcharge required by 37 CFR 1.20(i)(2) (Fee Code 1558) must be paid as a condition of accepting unintentionally delayed payment of the maintenance fee.

MAINTENANCE FEE (37 CFR 1.20(e)-(g))
The appropriate maintenance fee must be submitted with this petition.

STATEMENT
THE UNDERSIGNED CERTIFIES THAT THE DELAY IN PAYMENT OF THE MAINTENANCE FEE TO THIS PATENT WAS UNINTENTIONAL

PETITIONER(S) REQUEST THAT THE DELAYED PAYMENT OF THE MAINTENANCE FEE BE ACCEPTED AND THE PATENT REINSTATED

THIS PORTION MUST BE COMPLETED BY THE SIGNATORY OR SIGNATORIES

37 CFR 1.378(d) states: "Any petition under this section must be signed by an attorney or agent registered to practice before the Patent and Trademark Office, or by the patentee, the assignee, or other party in interest."

I certify, in accordance with 37 CFR 1.4(d)(4) that I am

◉ An attorney or agent registered to practice before the Patent and Trademark Office

○ A sole patentee

○ A joint patentee; I certify that I am authorized to sign this submission on behalf of all the other patentees.

○ A joint patentee; all of whom are signing this e-petition

○ The assignee of record of the entire interest

Patent Practitioner			
A signature of the applicant or representative is required in accordance with 37 CFR 1.33 and 10.18. Please see 37 CFR 1.4(d) for the form of the signature			
Signature	/Leonard Tachner/	Date (YYYY-MM-DD)	2007-09-14
Name	Leonard Tachner	Registration Number	26344

This collection of information is required by 37 CFR 1.378(c). The information is required to obtain or retain a benefit by the public which is to file (and by the USPTO to process) an application. Confidentiality is governed by 35 U.S.C. 122 and 37 CFR 1.11 and 1.14. This collection is estimated to take 1 hour to complete, including gathering, preparing, and submitting the completed application form to the USPTO. Time will vary depending upon the individual case. Any comments on the amount of time you require to complete this form and/ or suggestions for reducing this burden, should be sent to the Chief Information Officer, U.S. Patent and Trademark Office, U.S. Department of Commerce, P.O. Box 1450, Alexandria, VA 22313-1450. DO NOT SEND FEES OR COMPLETED FORMS TO THIS ADDRESS. **This form can only be used when in conjunction with EFS-Web. If this form is mailed to the USPTO, it may cause delays in reinstating the patent.**

Privacy Act Statement

The Privacy Act of 1974 (P.L. 93-579) requires that you be given certain information in connection with your submission of the attached form related to a patent application or patent. Accordingly, pursuant to the requirements of the Act, please be advised that: (1) the general authority for the collection of this information is 35 U.S.C. 2(b)(2); (2) furnishing of the information solicited is voluntary; and (3) the principal purpose for which the information is used by the U.S. Patent and Trademark Office is to process and/or examine your submission related to a patent application or patent. If you do not furnish the requested information, the U.S. Patent and Trademark Office may not be able to process and/or examine your submission, which may result in termination of proceedings or abandonment of the application or expiration of the patent.

The information provided by you in this form will be subject to the following routine uses:

1. The information on this form will be treated confidentially to the extent allowed under the Freedom of Information Act (5 U.S.C. 552) and the Privacy Act (5 U.S.C. 552a). Records from this system of records may be disclosed to the Department of Justice to determine whether the Freedom of Information Act requires disclosure of these record s.

2. A record from this system of records may be disclosed, as a routine use, in the course of presenting evidence to a court, magistrate, or administrative tribunal, including disclosures to opposing counsel in the course of settlement negotiations.

3. A record in this system of records may be disclosed, as a routine use, to a Member of Congress submitting a request involving an individual, to whom the record pertains, when the individual has requested assistance from the Member with respect to the subject matter of the record.

4. A record in this system of records may be disclosed, as a routine use, to a contractor of the Agency having need for the information in order to perform a contract. Recipients of information shall be required to comply with the requirements of the Privacy Act of 1974, as amended, pursuant to 5 U.S.C. 552a(m).

5. A record related to an International Application filed under the Patent Cooperation Treaty in this system of records may be disclosed, as a routine use, to the International Bureau of the World Intellectual Property Organization, pursuant to the Patent Cooperation Treaty.

6. A record in this system of records may be disclosed, as a routine use, to another federal agency for purposes of National Security review (35 U.S.C. 181) and for review pursuant to the Atomic Energy Act (42 U.S.C. 218(c)).

7. A record from this system of records may be disclosed, as a routine use, to the Administrator, General Services, or his/her designee, during an inspection of records conducted by GSA as part of that agency's responsibility to recommend improvements in records management practices and programs, under authority of 44 U.S.C. 2904 and 2906. Such disclosure shall be made in accordance with the GSA regulations governing inspection of records for this purpose, and any other relevant (i.e., GSA or Commerce) directive. Such disclosure shall not be used to make determinations about individuals.

8. A record from this system of records may be disclosed, as a routine use, to the public after either publication of the application pursuant to 35 U.S.C. 122(b) or issuance of a patent pursuant to 35 U.S.C. 151. Further, a record may be disclosed, subject to the limitations of 37 CFR 1.14, as a routine use, to the public if the record was filed in an application which became abandoned or in which the proceedings were terminated and which application is referenced by either a published application, an application open to public inspections or an issued patent.

9. A record from this system of records may be disclosed, as a routine use, to a Federal, State, or local law enforcement agency, if the USPTO becomes aware of a violation or potential violation of law or regulation.

UNITED STATES PATENT AND TRADEMARK OFFICE

Commissioner for Patents
United States Patent and Trademark Office
P.O. Box 1450
Alexandria, VA 22313-1450
www.uspto.gov

BAKER BOTTS L.L.P.
2001 ROSS AVENUE
SUITE 600
DALLAS TX 75201-2980

COPY MAILED

NOV 0 8 2005

OFFICE OF PETITIONS

In re Application of	:	
Boehringer	:	DECISION
Application No. 09/569,523	:	ON PETITION
Filed: May 12, 2000	:	
Attorney Docket No. 065446.0127	:	

This is a decision on the petition under 37 CFR 1.137(b), filed June 21, 2005, to revive the above-identified application.

The petition is **granted**.

This application became abandoned for failure to properly reply to the final Office action mailed May 12, 2004. Petitioner obtained a two month extension of time and filed an amendment on October 12, 2004 that failed to place this application in *prima facie* condition for allowance. This application became abandoned on October 13, 2004. The filing of the instant petition precedes the mailing of A Notice of Abandonment.

The Notice of Appeal filed June 21, 2005 has been made of record. Accordingly, the 2-month period for filing the appeal brief accompanied by the fee required by law runs from the date of this decision.

The file is being forwarded to Technology Center Art Unit 2613's technical support staff in order to enter the June 21, 2005 Notice of Appeal into Office databases.

Telephone inquiries concerning this matter may be directed to the undersigned at (571) 272-3230.

E. Shirene Willis
Senior Petitions Attorney
Office of Petitions

SPE RESPONSE FOR CERTIFICATE OF CORRECTION

DATE : 11-16-06

Paper No.: _____

TO SPE OF : ART UNIT 2123

SUBJECT : Request for Certificate of Correction on Patent No.: 7076412 B1 (09/569542

A response is requested with respect to the accompanying request for a certificate of correction.

Please complete this form and return with file, within **7** days to:
Palm location **7580, Certificates of Correction Branch – South Tower – 9A22**
If response is for an IFW, **return to employee (named below) via PUBSCofC Team in MADRAS.**
With respect to the change(s) requested, correcting Office and/or Applicant's errors, should the patent read as shown in the certificate of correction (COCIN)? No new matter should be introduced, nor should the scope or meaning of the claims be changed.

Should References Cited be entered?

Eva James

Thank You For Your Assistance

Certificates of Correction Branch
Tel. No. 703-305-8309

The request for issuing the above-identified correction(s) is hereby:
Note your decision on the appropriate box.

- ☑ **Approved** — **All** changes apply.
- ☐ **Approved in Part** — Specify below which changes **do not** apply.
- ☐ **Denied** — State the reasons for denial below.

Comments:

PAUL RODRIGUEZ
SUPERVISORY PATENT EXAMINER
TECHNOLOGY CENTER 2100

SPE

2123
Art Unit

UNITED STATES PATENT AND TRADEMARK OFFICE

Commissioner for Patents
United States Patent and Trademark Office
Washington, D.C.

COPY MAILED Paper No. 5

MCKENNA & CUNEO LLP
1900 K STREET, NW
WASHINGTON, DC 20006

JUN 29 2001

OFFICE OF PETITIONS
ADMINISTRATIVE

In re Application of
Cheng, et al.
Application No. 10/569,612
Filed: May 19, 2000
Attorney Docket No. 15117.0006

DECISION ON PETITIONS

This is a decision on the petition under 37 C.F.R. §1.53(e)(2), filed October 19, 2000, requesting that the above-identified application be accorded a filing date of May 19, 2000. This is also a decision on the petition under 37 C.F.R. §1.137(b), filed October 19, 2000, to revive the above-identified application.

Application papers in the above-identified application were filed on May 19, 2000. However, on July 26, 2000, the Initial Patent Examination Division mailed applicant a "Notice of Incomplete Nonprovisional Application," notifying applicant that the application papers had not been accorded a filing date because the specification filed did not include at least one claim. Applicant was given 2 months to submit a complete specification including at least one claim as prescribed by 35 U.S.C. 112, with a newly executed oath or declaration covering those items, or have proceedings on the application terminate pursuant to 37 C.F.R. §1.53(e).

On October 19, 2000, petitioner filed the instant petition under 1.53(e)(2), as well as, a petition to revive under §1.137(b). The 1.53 petition was not timely filed. Petitioner is advised that pursuant to §1.181(f) and §1.53(e)(3), the filing date petition may be dismissed as untimely. However, given the circumstances of this case, discussed below, this rule is being waived *sua sponte*. The rule 53 petition is being accepted in reply to the Notice and will be considered on the merits. Moreover, proceedings on the application are not considered terminated within the meaning of §1.53(e). Accordingly, consideration of the petition to revive under §1.137(b) is not necessary.

On petition under §1.53, petitioner maintains that all application elements required by 35 U.S.C. §112 were submitted on May 16, 2000. It is noted that this petition is filed within three months of the mail date of the Notice of Incomplete Nonprovisional Application. In support of the petition, petitioner submitted *inter alia* a copy of the return postcard receipt and a copy of the application as petitioner maintains it was filed.

A postcard receipt which itemizes and properly identifies the items which are being filed serves as *prima facie* evidence of receipt in the office of all items listed thereon on the date stamped thereon by the Office. See MPEP 503. A review of petitioner's postcard receipt reveals that: 1) it is date stamped as received in the Office of Initial Patent Examination (OIPE) on May 16, 2000; 2) among the items identified as included in the filing are "23 pgs of claims (203 claims)," and 3) it lacks any annotation of nonreceipt of any item denoted on the postcard.

Likewise, a review of the copy of the application as filed, reveals that it is a true copy, consistent with the description of the application on the postcard receipt. This copy includes 203 claims, pp. 97-119 (and p. 120 - the abstract). Thus, petitioner has shown that at least one claim was filed on May 10, 2000, and that the application as filed was a complete nonprovisional application under 37 C.F.R. §1.53(b), entitled to a filing date.

Accordingly, the petition under §1.53 is **GRANTED**.

The petition under §1.137(b) is **DISMISSED AS MOOT**.

Given the basis for granting the 1.53 petition, the petition fee, $131.00, is being refunded to Deposit Account 50-1067, as authorized. As consideration of the petition under §1.137(b) was unnecessary, the petition fee for such consideration, $1,240.00, is also being refunded to Deposit Account No. 50-1067, as authorized.

The application is being forwarded to the Office of Initial Patent Examination (OIPE) for further processing with a filing date of May 10, 2000, using the 23 pages of claims (203 claims) filed on that date. Applicant will receive appropriate notifications regarding the fees owed, if any, and other information in due course from OIPE, including the requested "Notice to File Missing Parts of Application - Filing Date Granted" regarding the missing oath or declaration.

Telephone inquiries related to this decision should be directed to Petitions Attorney Nancy Johnson at 703-305-0309.

Beverly M. Flanagan
Supervisory Petitions Examiner
Office of Petitions
Office of the Deputy Commissioner
for Patent Examination Policy

UNITED STATES
PATENT AND
TRADEMARK OFFICE

UNDER SECRETARY OF COMMERCE FOR INTELLECTUAL PROPERTY
AND DIRECTOR OF THE UNITED STATES PATENT AND TRADEMARK OFFICE
WASHINGTON, D.C. 20231
WWW.USPTO.GOV

MCKENNA & CUNEO LLP
1900 K STREET NW
WASHINGTON , DC 20006

In re Application of	:
Wing Cheung et al	:
Serial No.: 09/569,612	: PETITION TO MAKE SPECIAL
Filed: May 10, 2000	:
Attorney Docket No.: 15117.0006	:

This is in response to applicants' petition filed September 28, 2001, to make the above-identified application special under the provisions of 37 CFR 1.102(d).

Applicant has satisfied the provisions set forth in M.P.E.P. 708.02, X. Therefor the petition is **GRANTED**.

The application will be forwarded to the examiner for action on the merits commensurate with this decision.

Should there be any questions with regard to this letter please contact William R. Dixon, Jr. by letter addressed to the Director, Technology Center 1600, Washington, DC 20231, or by telephone at (703) 308-3824 or by facsimile transmission at (703) 305-7230

William R. Dixon, Jr.
Special Program Examiner
Technology Center 1600

UNITED STATES PATENT AND TRADEMARK OFFICE

COMMISSIONER FOR PATENTS
UNITED STATES PATENT AND TRADEMARK OFFICE
WASHINGTON, D.C. 20231
www.uspto.gov

Paper No. 7

PETER G. PAPPAS
SUTHERLAND ASBILL & BRENNAN LLP
999 PEACHTREE STREET, N.E.
ATLANTA, GA 30309

COPY MAILED

MAR 2 9 2002

OFFICE OF PETITIONS

In re Application of :
Jeffery W. Walker et al. :
Application No. 09/569,645 : ON PETITION
Filed: May 12, 2000 :
Attorney Docket No. 17342-0005 :

This is a decision on the petition under 37 CFR 1.182, filed January 18, 2002, to change the order of the names of the inventors.

The petition is granted.

Office records have been corrected to reflect the desired order of inventorship. A corrected filing receipt accompanies this decision.

This file is being forwarded to Technology Center 2800.

Telephone inquiries concerning this matter may be directed to Irvin Dingle at (703) 306-5684.

Frances Hicks

Frances Hicks
Petitions Examiner
Office of Petitions
Office of the Deputy Commissioner
for Patent Examination Policy

Attachment: Corrected Filing Receipt

UNITED STATES PATENT AND TRADEMARK OFFICE

COMMISSIONER FOR PATENTS
UNITED STATES PATENT AND TRADEMARK OFFICE
WASHINGTON, D.C. 20231
www.uspto.gov

Paper No. 3

CENTRAL COAST PATENT AGENCY
PO BOX 187
AROMAS , CA 95004

COPY MAILED
AUG - 8 2001
OFFICE OF PETITIONS

In re Application of :
Rafael C. Camarota :
Application No. 09/569,741 :
Filed: May 11, 2000 :
Attorney Docket No. P800 :

ON PETITION

This is a decision on the petition under 37 CFR 1.182, filed June 5, 2001, to correct the spelling of the name of the sole inventor.

The petition is granted.

PTO records have been corrected as follows:

> The name of the sole inventor has been corrected from "Rafel C. Camarota" to "Rafael C. Camarota"

A corrected filing receipt is enclosed.

This application is being returned to Technology Center 2700.

Sherry D. Brinkley
Petitions Examiner
Office of Petitions
Office of the Deputy Commissioner
for Patent Examination Policy

ENCLOSURE

UNITED STATES PATENT AND TRADEMARK OFFICE

Commissioner for Patents
United States Patent and Trademark Office
P.O. Box 1450
Alexandria, VA 22313-1450
www.uspto.gov

CARR & FERRELL LLP
2200 GENG ROAD
PALO ALTO CA 94303

COPY MAILED

JAN 21 2005

OFFICE OF PETITIONS

NOTICE

In re Application of :
Rafael C. Camarota :
Application No. 09/569,741 :
Filed: May 11, 2000 :
Attorney Docket No. P800 :

This is a notice regarding your request for acceptance of a fee deficiency submission under 37 CFR 1.28. On September 1, 1998, the Court of Appeals for the Federal Circuit held that 37 CFR 1.28(c) is the sole provision governing the time for correction of the erroneous payment of the issue fee as a small entity. **See DH Technology v. Synergystex International, Inc. 154 F.3d 1333, 47 USPQ2d 1865 (Fed. Cir. Sept. 1, 1998).**

The Office no longer investigates or rejects original or reissue applications under 37 CFR 1.56. **1098 Off. Gaz. Pat. Office 502 (January 3, 1989).** Therefore, nothing in this Notice is intended to imply that an investigation was done.

Your fee deficiency submission under 37 CFR 1.28 is hereby **ACCEPTED.**

This application no longer qualifies for small entity status. Accordingly, all future fees must be paid at the large entity rate.

Inquiries related to this communication should be directed to the undersigned at (571) 272-3208.

Karen Creasy

Karen Creasy
Petitions Examiner
Office of Petitions
Office of the Deputy Commissioner
for Patent Examination Policy

SPE RESPONSE FOR CERTIFICATE OF CORRECTION

Paper No.: _____

DATE : 3/31/04

TO SPE OF : ART UNIT 2834

SUBJECT : Request for Certificate of Correction on Patent No.: 6,621,191

A response is requested with respect to the accompanying request for a certificate of correction.

Please complete this form and return with file, within 7 days to:
Certificates of Correction Branch - PK 3-915
Palm location ~~7580~~ 7590 - Tel. No. 305-~~8309~~ 8201

With respect to the change(s) requested, correcting Office and/or Applicant's errors, should the patent read as shown in the certificate of correction? No new matter should be introduced, nor should the scope or meaning of the claims be changed.

Please see COCIN dated 10-29-03 in table of contents in IFW.

Diana T. Rose
Certificates of Correction Branch

Thank You For Your Assistance

The request for issuing the above-identified correction(s) is hereby:
Note your decision on the appropriate box.

- ☒ **Approved** — All changes apply.
- ☐ **Approved in Part** — Specify below which changes do not apply.
- ☐ **Denied** — State the reasons for denial below.

Comments:
Only correcting mistakes from being difficult to read when scanned. Do Not Charge Applicant.

DARREN SCHUBERG
SUPERVISORY PATENT EXAMINER
SPE
TECHNOLOGY CENTER 2800

2834
Art Unit

PTOL-306 (REV. 7/03)

U.S. DEPARTMENT OF COMMERCE Patent and Trademark Office

SPE RESPONSE FOR CERTIFICATE OF CORRECTION

Paper No.: _____

DATE : 3/25/04

TO SPE OF : ART UNIT 2834

SUBJECT : Request for Certificate of Correction on Patent No.: 6621191

A response is requested with respect to the accompanying request for a certificate of correction.

Please complete this form and return with file, within **7** days to:
Certificates of Correction Branch - PK 3-915
Palm location **7580** - Tel. No. 305-8309

With respect to the change(s) requested, correcting Office and/or Applicant's errors, should the patent read as shown in the certificate of correction? No new matter should be introduced, nor should the scope or meaning of the claims be changed.

Thank You For Your Assistance

Certificates of Correction Branch

The request for issuing the above-identified correction(s) is hereby:
Note your decision on the appropriate box.

- ☐ **Approved** — All changes apply.
- ☐ **Approved in Part** — Specify below which changes **do not** apply.
- ☐ **Denied** — State the reasons for denial below.

Comments:

_____

_____

_____

_____

_____

SPE _____ **Art Unit** _____

UNITED STATES PATENT AND TRADEMARK OFFICE

Commissioner for Patents
United States Patent and Trademark Office
P.O. Box 1450
Alexandria, VA 22313-1450
www.uspto.gov

TOWNSEND AND TOWNSEND AND CREW, LLP
TWO EMBARCADERO CENTER
EIGHTH FLOOR
SAN FRANCISCO, CA 94111-3834

COPY MAILED
FEB 01 2010

In re Application of
William W. Y. Chu
Application No. 09/569,758
Filed: May 12, 2000
Attorney Docket No. 019152-0011110US

DECISION ON PETITION
TO WITHDRAW
FROM RECORD

This is a decision on the Request to Withdraw as attorney or agent of record under 37 C.F.R. § 1.36(b), filed March 3, 2009.

The request is **DISMISSED** as moot.

A review of the file record indicates that the power of attorney to Townsend and Townsend and Crew, LLP has been revoked by the assignee of the patent application on May 5, 2009. Accordingly, the request to withdraw under 37 C.F.R. § 1.36(b) is moot.

All future communications from the Office will continue to be directed to the below-listed address until otherwise notified by applicant.

Telephone inquires concerning this decision should be directed to undersigned at 571-272-1642.

/AMW/
April M. Wise
Petitions Examiner
Office of Petitions

cc: AQIS TECHNOLOGY, INC.
1621 W. EL CAMINO REAL
SUITE 202
MOUNTAIN VIEW, CA 94040

SPE RESPONSE FOR CERTIFICATE OF CORRECTION

Paper No.: _____

DATE : 07-20-09

TO SPE OF : ART UNIT 2193

SUBJECT : Request for Certificate of Correction for Appl. No.: 09/569944 Patent No.: 7523151

Please respond to this request for a certificate of correction within 7 days.

FOR IFW FILES:

Please review the requested changes/corrections as shown in the **COCIN** document(s) in the IFW application image. No new matter should be introduced, nor should the scope or meaning of the claims be changed.

Please complete the response (see below) and forward the completed response to scanning using document code **COCX**.

FOR PAPER FILES:

Please review the requested changes/corrections as shown in the attached certificate of correction. Please complete this form (see below) and forward it with the file to:

Certificates of Correction Branch (CofC)
South Tower - 9A22
Palm Location 7580

Angela Green
Certificates of Correction Branch
703-756-1541

Thank You For Your Assistance

The request for issuing the above-identified correction(s) is hereby:
Note your decision on the appropriate box.

- ☒ **Approved** — **All** changes apply.
- ☐ **Approved in Part** — Specify below which changes **do not** apply.
- ☐ **Denied** — State the reasons for denial below.

Comments: _____

LEWIS A. BULLOCK, JR.
SUPERVISORY PATENT EXAMINER 2193
SPE Art Unit

UNITED STATES PATENT AND TRADEMARK OFFICE

Commissioner for Patents
United States Patent and Trademark Office
P.O. Box 1450
Alexandria, VA 22313-1450
www.uspto.gov

SETH D. LEVY
PILLSBURY WINTHROP LLP
725 SOUTH FIGUEROA STREET, SUITE 2800
LOS ANGELES, CA 90017

COPY MAILED

JAN 07 2005

OFFICE OF PETITIONS

In re Application of :
Gregory A. Horwitz et al :
Application No. 09/569,956 :
Filed: May 12, 2000 :
Attorney Docket No. CEDAR-044527

NOTICE

This is in response to the paper filed May 17, 2004 which is being treated under 37 CFR 1.28(b) requesting that status as a Small Entity be removed.

In accordance with the May 17, 2004 request, status as a Small Entity has been removed and the large entity issue fee has been accepted.

Inquiries related to this communication should be directed to Irvin Dingle at (571) 272-3210.

Irvin Dingle
Petitions Examiner
Office of Petitions
Office of the Deputy Commissioner
for Patent Examination Policy

SPE RESPONSE FOR CERTIFICATE OF CORRECTION

Paper No.: _____

DATE : April 05, 2007

TO SPE OF : ART UNIT 2611

09/569957

SUBJECT : Request for Certificate of Correction on Patent No.: 7139342 B1

A response is requested with respect to the accompanying request for a certificate of correction.

Please complete this form and return with file, within **7** days to:
Palm location **7580, Certificates of Correction Branch – South Tower – 9A22**
If response is for an IFW, **return to employee (named below) via PUBSCofC Team in MADRAS.**
With respect to the change(s) requested, correcting Office and/or Applicant's errors, should the patent read as shown in the certificate of correction (COCIN)? No new matter should be introduced, nor should the scope or meaning of the claims be changed.

Thank You For Your Assistance

Elisha Evans
Certificates of Correction Branch
Tel. No. 703-308-9390 EXT 110

The request for issuing the above-identified correction(s) is hereby:
Note your decision on the appropriate box.

- ☐ **Approved** — **All** changes apply.
- ☑ **Approved in Part** — Specify below which changes **do not** apply.
- ☐ **Denied** — State the reasons for denial below.

Comments:

1) Request for a certificate of correction for incorporating cross-referenced related applications is denied because it would introduce new matter since the subject matter of the related applications was never part of the originally disclosed invention of the present patent.
2) Deletion of "(fo/106) and replacing it with - (fo/10^6) is approved.

SPE [signature] **Art Unit** 2611

PTO/SB/44 (04-04)
Approved for use through 04/30/2007. OMB 0651-0033
U.S. Patent and Trademark Office; U.S. DEPARTMENT OF COMMERCE
Under the Paperwork Reduction Act of 1995, no persons are required to respond to a collection of information unless it displays a valid OMB control number.
(Also Form PTO-1050)

UNITED STATES PATENT AND TRADEMARK OFFICE
CERTIFICATE OF CORRECTION

PATENT NO. : 7,139,342 B1

DATED : November 21, 2006

INVENTOR(S) : Abhijit M. Phanse

It is certified that error appears in the above-identified patent and that said Letters Patent is hereby corrected as shown below:

Column 1, line 29, at the end of the section titled "CROSS-REFERENCE TO RELATED APPLICATIONS" insert the following paragraph:

– The above applications are commonly assigned to the assignee of the present invention. The disclosures of these related patent applications are hereby incorporated by reference for all purposes as if fully set forth herein –;

Column 10, line 4, delete "(f_0/106)" and replace with – ($f_0/10^6$) –.

MAILING ADDRESS OF SENDER:
Docket Clerk
P.O. Drawer 800889
Dallas, Texas 75380

PATENT NO. 7,139,342 B1

No. of additional copies

⇨ 1

This collection of information is required by 37 CFR 1.322, 1.323, and 1.324. The information is required to obtain or retain a benefit by the public which is to file (and by the USPTO to process) an application. Confidentiality is governed by 35 U.S.C. 122 and 37 CFR 1.14. This collection is estimated to take 1.0 hour to complete, including gathering, preparing, and submitting the completed application form to the USPTO. Time will vary depending upon the individual case. Any comments on the amount of time you require to complete this form and/or suggestions for reducing this burden, should be sent to the Chief Information Officer, U.S. Patent and Trademark Office, U.S. Department of Commerce, P.O. Box 1450, Alexandria, VA 22313-1450. DO NOT SEND FEES OR COMPLETED FORMS TO THIS ADDRESS. SEND TO: **Attention Certificate of Corrections Branch, Commissioner for Patents, P.O. Box 1450, Alexandria, VA 22313-1450.**

If you need assistance in completing the form, call 1-800-PTO-9199 and select option 2.

MAR 1 4 2007

JPF

FORMALITIES LETTER

OC000000005276600

UNITED STATES DEPARTMENT OF COMMERCE
Patent and Trademark Office
Address: COMMISSIONER OF PATENT AND TRADEMARKS
Washington, D.C. 20231

APPLICATION NUMBER	FILING/RECEIPT DATE	FIRST NAMED APPLICANT	ATTORNEY DOCKET NUMBER
09/569,960	05/12/2000	Martin Stanton	08609-009003

J Peter ~~Fase~~ FASSE
Fish & Richardson PC
225 Franklin Street
Boston, MA 02110-2804

OIPE JC38 NOV 0 2 2000 PATENT & TRADEMARK OFFICE

Date Mailed: 07/28/2000

NOTICE TO FILE MISSING PARTS OF NONPROVISIONAL APPLICATION

FILED UNDER 37 CFR 1.53(b)

Filing Date Granted

An application number and filing date have been accorded to this application. The item(s) indicated below, however, are missing. Applicant is given TWO MONTHS from the date of this Notice within which to file all required items and pay any fees required below to avoid abandonment. Extensions of time may be obtained by filing a petition accompanied by the extension fee under the provisions of 37 CFR 1.136(a).

- The statutory basic filing fee is missing.
  Applicant must submit **$ 690** *to complete the basic filing fee and/or file a small entity statement claiming such status (37 CFR 1.27).*
- Total additional claim fee(s) for this application is $804.
  - **$414** for **23** total claims over 20.
  - **$390** for **5** independent claims over 3 .
- The oath or declaration is unsigned.
- To avoid abandonment, a late filing fee or oath or declaration surcharge as set forth in 37 CFR 1.16(e) of $130 for a non-small entity, must be submitted with the missing items identified in this letter.
- **The balance due by applicant is $ 1624.**

A copy of this notice MUST be returned with the reply.

Customer Service Center
Initial Patent Examination Division (703) 308-1202

11/06/2000 ETULU1 00000080 09569960

01 FC:201 355.00 OP
02 FC:203 65.00 OP
03 FC:203 207.00 OP
04 FC:202 160.00 OP

PART 2 - COPY TO BE RETURNED WITH RESPONSE

Docketed By Practice Systems
Action Code: MISS. parts.
Base Date: 7-28-00
Due Date: 9-28-00
Deadline: 1-28-01
Initial: MTD

Docketed By Billing Secretary
Due Date: 9/28/00
Deadline: 1/28/01
Initials: CXM

Attorney's Docket No.: 08609-009003 / 981001C

IN THE UNITED STATES PATENT AND TRADEMARK OFFICE

Art Unit : 1643
Examiner : Unknown

Applicant : Martin anton et al.
Serial No. : 09/56 960
Filed : Ma 2, 2000
Title : N LEIC ACID-BASED DETECTION

OIPE JC38 NOV 0 2 2000 PATENT & TRADEMARK OFFICE

BOX MIS S PARTS
Commis for Patents
Washi D.C. 20231

RESPONSE TO NOTICE TO FILE MISSING PARTS OF APPLICATION

In response to the Notice to File Missing Parts of Application under 37 CFR §1.53(b) mailed July 28, 2000 (copy enclosed), applicant as a small entity submits herewith the following:

- ☒ Payment of the basic filing fee of $355;
- ☒ Payment of the additional/multiple dependent claims fees of $367;
- ☒ Payment of $65 surcharge for filing the basic filing fee and declaration on a date later than the filing date of the application;
- ☒ A Verified Statement Claiming Small Entity Status;
- ☒ Combined Declaration and Power of Attorney in compliance with 37 CFR §1.63;
- ☒ Check for $787.

It is understood that this perfects the application and no additional papers or filing fees are required.

CERTIFICATE OF MAILING BY FIRST CLASS MAIL

I hereby certify under 37 CFR §1.8(a) that this correspondence is being deposited with the United States Postal Service as first class mail with sufficient postage on the date indicated below and is addressed to the Commissioner for Patents, Washington, D.C. 20231.

10-30-00
Date of Deposit

Maureen Christiano
Signature

Maureen Christiano
Typed or Printed Name of Person Signing Certificate

Please apply any other charges or credits to Deposit Account No. 06-1050.

Respectfully submitted,

Date: 10/30/00

David A. Simons
Reg. No. 45,888

Fish & Richardson P.C.
225 Franklin Street
Boston, MA 02110-2804
Telephone: (617) 542-5070
Facsimile: (617) 542-8906

20170046.doc

OIPE JC87
JUN 2 0 2002
PATENT & TRADEMARK OFFICE

Attorney's Docket No.: 08609-009003 / 981001C

IN THE UNITED STATES PATENT AND TRADEMARK OFFICE

Applicant : Martin Stanton et al.
Serial No. : 09/569,960
Filed : May 12, 2000
Title : NUCLEIC ACID-BASED DETECTION

Art Unit : 1655
Examiner : S. Zitomer

RECEIVED
JUN 2 5 2002
TECH CENTER 1600/2900

BOX SEQUENCE
U.S. Patent and Trademark Office
P.O. Box 2327
Arlington, VA 22202

SUBMISSION OF SEQUENCE LISTING

In response to the communication dated December 17, 2001, applicants submit herewith a Sequence Listing in computer readable form as required by 37 CFR §1.824. In addition, applicants submit a statement under 37 CFR §1.821(f).

Applicants hereby submits that the enclosures fulfill the requirements under 37 C.F.R. §1.821-1.825. No new matter has been added.

Please apply any charges or credits to Deposit Account No. 06-1050, referencing attorney docket number 08609-009003.

Respectfully submitted,

Date: 6/17/02

Charles H. Sanders
Reg. No. 47,053

Fish & Richardson P.C.
225 Franklin Street
Boston, Massachusetts 02110-2804
Telephone: (617) 542-5070
Facsimile: (617) 542-8906

20436262.doc

CERTIFICATE OF MAILING BY FIRST CLASS MAIL

I hereby certify under 37 CFR §1.8(a) that this correspondence is being deposited with the United States Postal Service as first class mail with sufficient postage on the date indicated below and is addressed to the U.S. Patent and Trademark Office, P.O. Box 2327, Arlington, VA 22202.

June 17, 2002
Date of Deposit

Signature

Nancy A. Tuttle
Typed or Printed Name of Person Signing Certificate

UNITED STATES PATENT AND TRADEMARK OFFICE

COMMISSIONER FOR PATENTS
UNITED STATES PATENT AND TRADEMARK OFFICE
WASHINGTON, D.C. 20231
www.uspto.gov

Paper No. 12

VENABLE
P.O. BOX 34385
WASHINGTON, DC 20043-9998

COPY MAILED

DEC 1 0 2001

OFFICE OF PETITIONS

ON PETITION

In re Application of :
Gregory Garcia et al. :
Application No. 09/570,023 :
Filed: May 12, 2000 :
Attorney Docket No. 38644-175525 :

This is a decision on the petition under 37 CFR 1.137(b), filed October 5, 2001, to revive the above-identified application.

The petition is **GRANTED**.

The above-identified application became abandoned for failure to reply in a timely manner to the Notice to Comply with Requirements for Patent Applications Containing Nucleotide Sequence and/or Amino Acid Sequence Disclosures (Notice) mailed January 3, 2001. The Notice set a period for reply of one (1) month from the mail date of the Notice. No extensions of time under the provisions of 37 CFR 1.136(a) were obtained. Accordingly, the above-identified application became abandoned on February 4, 2001.

Telephone inquiries concerning this decision should be directed to Irvin Dingle at (703) 306-5684.

The application file is being forwarded to Technology Center 1600 for further processing.

Irvin Dingle
Petitions Examiner
Office of Petitions
Office of the Deputy Commissioner
for Patent Examination Policy

UNITED STATES PATENT AND TRADEMARK OFFICE

Commissioner for Patents
United States Patent and Trademark Office
P.O. Box 1450
Alexandria, VA 22313-1450
www.uspto.gov

DENNISON, SCHULTZ & MACDONALD
1727 KING STREET
SUITE 105
ALEXANDRIA VA 22314

In re Application of: Shibata, Yoshinori Serial No. 09/570,035 Filed: May 12, 2000 Docket: 00091 Title: LIGHTED POWER TOOLS	DECISION ON PETITION UNDER 37 CFR § 1.181 To Withdraw Holding of Abandonment

This is a decision on the petition filed on Sep. 26, 2007. The petitioner requests withdrawal of the holding of abandonment pursuant to 37 CFR 1.181(a).

The petition is **GRANTED.**

The present application was held abandoned for failure to timely respond to the non-responsive amendment letter mailed on Aug. 27, 2003, which set a one month shortened period for reply. Notice of abandonment was mailed on Mar. 9, 2006.

Petitioner asserts that a timely response to the non-responsive amendment letter was transmitted via facsimile to the Office on Sep. 10, 2003. The petitioner has supplied a copy of a Transmission Verification Report and a copy of the response indicating a transmitting date of Sep. 10, 2003. The petitioner also provided a Certificate of Transmission pursuant to 37 CFR § 1.8, dated Sep. 10, 2003 of the amendment.

As petitioner has provided convincing evidence that a timely reply to the non-responsive amendment letter mailed on Aug. 27, 2003 was filed with the Office on Sep. 10, 2003, there is no abandonment in fact. Any inconvenience or delay caused to applicant is regretted.

In view of the above, the Notice of Abandonment mailed Mar. 9, 2006 is in error and is hereby vacated. The holding of abandonment is withdrawn. This application is being forwarded to the examiner in Art Unit 3724 for appropriate action.

PETITION GRANTED

Frederick R. Schmidt, Director
Technology Center 3700

UNITED STATES PATENT AND TRADEMARK OFFICE

Commissioner for Patents
United States Patent and Trademark Office
P.O. Box 1450
Alexandria, VA 22313-1450
www.uspto.gov

MAIL

JUL 1 9 2005

DIRECTOR OFFICE
TECHNOLOGY CENTER 2600

AT&T CORP.
P.O. BOX 4110
MIDDLETOWN NJ 07748

In re Application of
Justin Che-I Chuang, et al.
Application No. 09/570,097
Filed: May 12, 2000
For: **METHOD AND SYSTEM FOR INTEGRATED LINK ADAPTATION AND POWER CONTROL TO IMPROVE ERROR AND THROUGHPUT PERFORMANCE IN WIRELESS PACKET NETWORKS**

DECISION ON PETITION
TO WITHDRAW HOLDING OF
ABANDONMENT

This is a decision on the Petition to Withdraw the Holding of Abandonment filed July 8, 2005, pursuant to 37 C.F.R. §1.181. No fee is required.

The petition is **GRANTED.**

The application was abandoned for failure to respond in a timely and effective manner to the non-final Office action mailed April 13, 2004. A Notice of Abandonment was mailed May 26, 2005 and re-mailed on June 7, 2005.

Petitioner asserts that response was timely filed on August 25, 2004. In support of the petition, Petitioner has submitted, a copy of the amendment/response and a date-stamped post card receipt which itemizes the filing of a "check"; "Transmittal Form"; Extension of Time Form and Amendment (12 pages). The date stamped on the post card receipt is August 25, 2004.

The original correspondence filed was not matched with the application file and cannot be located. However, M.P.E.P. § 503 states, "[a] post card receipt which itemizes and properly identifies the papers which are being filed serves as *prima facie* evidence of receipt in the U.S.PTO of all the items listed thereon on the date stamped thereon by the PTO." Furthermore, a review of the PTO Revenue Accounting and Management (RAM) system finds that the two month extension of time fee was received on August 25th and processed on August 26, 2004. Accordingly, it is concluded that the Amendment was timely filed in the Patent and Trademark Office but not matched with the application file.

In view of the above stated reasons, the holding of abandonment is withdrawn.

The application file will be forwarded to the Technology Center's technical support staff for entering the copy of the amendment submitted with the petition. From there, the file will be forwarded to the examiner for appropriate action in due course.

Dwayne Bost
Special Program Examiner
Technology Center 2600
Communications

UNITED STATES PATENT AND TRADEMARK OFFICE

COMMISSIONER FOR PATENTS
UNITED STATES PATENT AND TRADEMARK OFFICE
P.O. BOX 1450
ALEXANDRIA, VA 22313-1450
www.uspto.gov

JUN 16 2004

McCarter & English, LLP
Four Gateway Center
100 Mulberry Street
Newark, NJ 07102

Paper No. 17

In re Application of Manfred Keller et al Serial No. : 09/570,107 Filed : May 12, 2000 For : Inhaler for Multiple Dosed Administration of a Pharmacological Dry Powder	: DECISION ON PETITION : TO WITHDRAW : HOLDING OF : ABANDONMENT :

This is a decision on petitioner's request filed April 9, 2004 to review the holding of abandonment mailed October 1, 2003, for failure to respond to the Office action mailed February 12, 2003. The basis for the request is that applicant did not receive the communication mailed February 12, 2003. There is no fee required for this petition.

In order to overcome the presumption of delivery of an Office action, a practitioner must submit the following: (1) a statement from the practitioner stating that the Office action was not received by practitioner; (2) a statement attesting to the fact that a search of the file jacket and docket record indicates that the Office action was not received; and (3) a copy of the docket record where the non-received Office action would have been entered had it been received and docketed. See 1156 OG 53.

The request filed April 9, 2004 includes all the above elements. The request is therefore GRANTED and the holding of abandonment withdrawn. Upon the mailing of this decision, the application will be forwarded to the Legal Instruments Examiner for the re-mailing of the Office action of February 12, 2003, which action will set forth a new period for reply.

Summary: Holding of Abandonment Withdrawn.

John E. Kittle, Director
Groups 3730 and 3760
Phone: (703) 308-0873

ak/06/14/04

09570181

SPE RESPONSE FOR CERTIFICATE OF CORRECTION

Paper No.: _____

DATE : 5-11-05

TO SPE OF : ART UNIT 2815

SUBJECT : Request for Certificate of Correction on Patent No.: 6876052

A response is requested with respect to the accompanying request for a certificate of correction.

Please complete this form and return with file, within **7** days to:
Certificates of Correction Branch - PK 3-915
Palm location **7580** - Tel. No. 305-8309

With respect to the change(s) requested, correcting Office and/or Applicant's errors, should the patent read as shown in the certificate of correction? No new matter should be introduced, nor should the scope or meaning of the claims be changed.

Please check Drawings

Thank You For Your Assistance

Certificates of Correction Branch

The request for issuing the above-identified correction(s) is hereby:
Note your decision on the appropriate box.

- ☒ **Approved** — All changes apply.
- ☐ **Approved in Part** — Specify below which changes **do not** apply.
- ☐ **Denied** — State the reasons for denial below.

Comments:

Drawings filed 4/11/05 are approved.

T. Thomas
SPE

2815
Art Unit

OIPE JC173
APR 1 1 2005
PATENT & TRADEMARK OFFICE

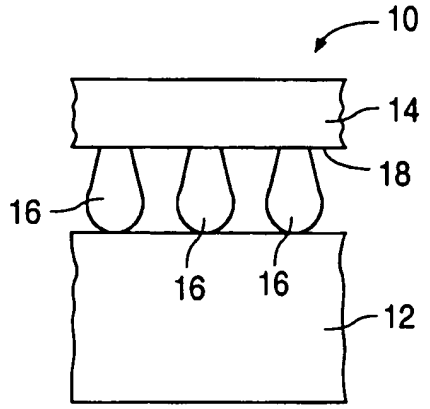

FIG. 1
(PRIOR ART)

approved
9/9/05

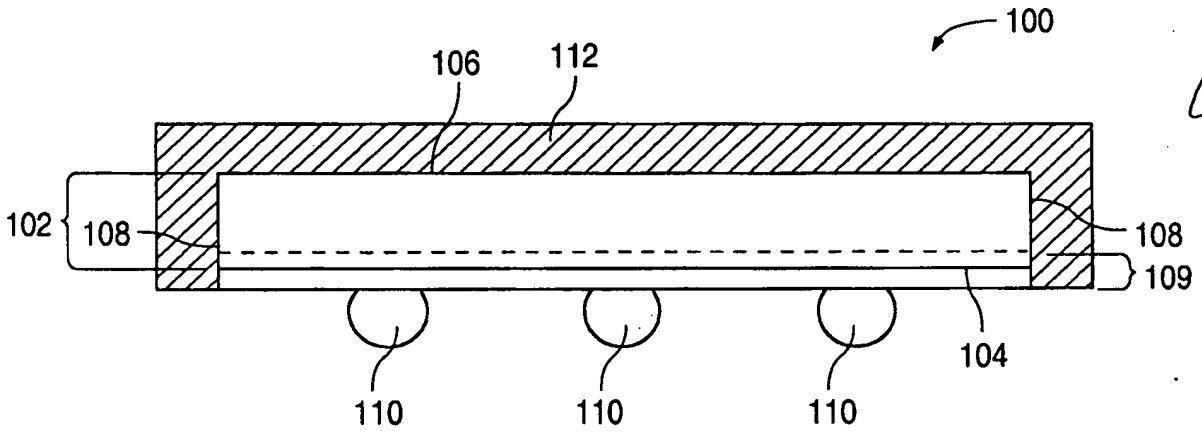

FIG. 2

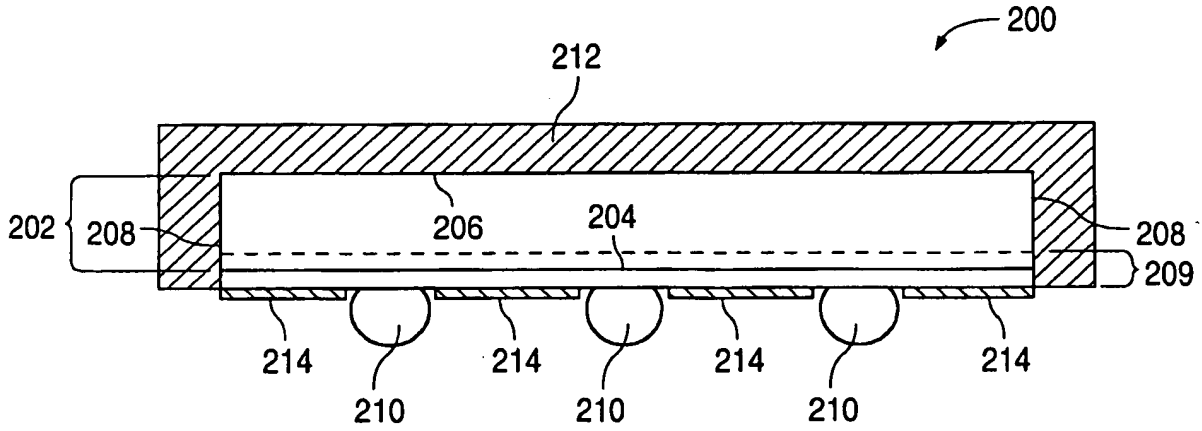

FIG. 3

UNITED STATES PATENT AND TRADEMARK OFFICE

Commissioner for Patents
United States Patent and Trademark Office
P.O. Box 1450
Alexandria, VA 22313-1450
www.uspto.gov

MARK J. MURPHY
COOK ALEX McFARRON MANZO
CUMMINGS & MEHLER LTD
200 WEST ADAMS STREET, SUITE 2850
CHICAGO, IL 60606

COPY MAILED
AUG 01 2005
OFFICE OF PETITIONS

In re Application of	:
Satoshi Murakami et al	:
Application No. 09/570,223	: DECISION GRANTING PETITION
Filed: May 12, 2000	: UNDER 37 CFR 1.313(c)(2)
Attorney Docket No. SEL 181	:

This is a decision on the petition, filed August 1, 2005, under 37 CFR 1.313(c)(2) to withdraw the above-identified application from issue after payment of the issue fee.

The petition is **GRANTED**.

The above-identified application is withdrawn from issue for consideration of a submission under 37 CFR 1.114 (request for continued examination). See 37 CFR 1.313(c)(2).

Petitioner is advised that the issue fee paid on March 4, 2005 in the above-identified application cannot be refunded. If, however, the above-identified application is again allowed, petitioner may request that it be applied towards the issue fee required by the new Notice of Allowance.[1]

Telephone inquiries should be directed to the undersigned at (571) 272-3218.

This matter is being referred to Technology Center AU 2826 for processing of the request for continued examination under 37 CFR 1.114 and for consideration of the Information Disclosure Statement.

Frances Hicks
Frances Hicks
Petitions Examiner
Office of Petitions

---

[1] *The request to apply the issue fee to the new Notice may be satisfied by completing and returning the new Issue Fee Transmittal Form PTOL-85(b), which includes the following language thereon: "Commissioner for Patents is requested to apply the Issue Fee and Publication Fee (if any) or re-apply any previously paid issue fee to the application identified above." Petitioner is advised that, whether a fee is indicated as being due or not, the Issue Fee Transmittal Form* ***must*** *be completed and timely submitted to avoid abandonment. Note the language in bold text on the first page of the Notice of Allowance and Fee(s) Due (PTOL-85).*

UNITED STATES PATENT AND TRADEMARK OFFICE

COMMISSIONER FOR PATENTS
UNITED STATES PATENT AND TRADEMARK OFFICE
P.O. BOX 1450
ALEXANDRIA, VA 22313-1450
www.uspto.gov

SUTHERLAND ASBILL & BRENNAN LLP
999 PEACHTREE STREET, N.E.
ATLANTA GA 30309

MAILED

MAR 04 2009

OFFICE OF PETITIONS

In re Application of
Martin
Application No. 09/570,245
Filed: May 12, 2000
Attorney Docket No. 30236.30006
For: METHOD AND SYSTEM FOR TRANSFERRING MONEY IN BUSINESS-TO-BUSINESS INTERNET TRANSACTIONS

: Decision on Petition

The above-identified application has been forwarded to the undersigned for consideration on the "Petition under 37 CFR 1.183," which was received on June 12, 2008, for the above-identified application. See 35 U.S.C. § 154(b) and 37 C.F.R. 1.183 and 1.701.

The petition under 37 CFR 1.183 for patent term extension is dismissed.

Petitioner notes that the above-identified application was filed on May 12, 2000; allowed on April 2, 2008, but was delayed by an appeal to the Board of Patent Appeals and Interferences. Petitioner asserts that the patent to issue from the above-identified application should include at least 1,408 days or alternatively 966 days of patent term extension.

Petitioner notes that the Appeal Brief in the application was filed on June 15, 2004 and that a restriction Requirement was mailed by the Office on January 16, 2007, which was followed up by a series of interviews on February 22, 2007, July 13, 2007, August 22, 2007 and October 11, 2007, which lead to an Examiner's Amendment to cancel claims. A Notice of Allowance and Fees Due notice was mailed on April 2, 2008, which indicated that the patent term extension was zero (0) days.

Petitioner argues that the Office should waive 37 CFR 1.701(a)(3), as the Office caused the administrative delays by taking inappropriate actions and because the appeal was effectively and unilaterally withdrawn by the Patent Office resulting in the allowance of the claims in the same form as they were pending on appeal and that to preserve equity and justice the provisions of 37 CFR 1.701(a)(3) should be waived.

Petitioner argues that had the application been filed approximately 2 weeks later, the application would be under the patent term adjustment provisions contained in 37 CFR 1.702 - 1.704, and the patentee would be granted a patent term adjustment for the above identified delays.

Petitioner argues that the improper issuance of a restriction requirement and effectively withdrawing the appeal is essentially the same, as the Board rendering a decision reversing an adverse determination of patentability and that the issuance of a Notice of Allowance should be considered "a decision in the review reversing an adverse determination of patentability" under 35 U.S.C. 154(b) and therefore, Petitioner should be entitled to a patent term extension.

Petitioner asserts that the patent term should be extended for the entire delay from the date of the Notice of Appeal to the mailing of the Notice of Allowance, which is 1,408 days or alternatively that the patent should be extended by 966 days under 35 U.S.C. § 154(b)(1)(B).

Applicable Statutes and Regulation

35 U.S.C. 154. Contents and term of patent (in effect from June 8, 1995 to May 28, 2000)
***

(b) TERM EXTENSION.-

(1) INTERFERENCE DELAY OR SECRECY ORDERS.-If the issue of an original patent is delayed due to a proceeding under section 135(a) of this title, or because the application for patent is placed under an order pursuant to section 181 of this title, the term of the patent shall be extended for the period of delay, but in no case more than 5 years.

(2) EXTENSION FOR APPELLATE REVIEW.-If the issue of a patent is delayed due to appellate review by the Board of Patent Appeals and Interferences or by a Federal court and the patent is issued pursuant to a decision in the review reversing an adverse determination of patentability, the term of the patent shall be extended for a period of time but in no case more than 5 years. A patent shall not be eligible for extension under this paragraph if it is subject to a terminal disclaimer due to the issue of another patent claiming subject matter that is not patentably distinct from that under appellate review.

(3) LIMITATIONS.-The period of extension referred to in paragraph (2)-

(A) shall include any period beginning on the date on which an appeal is filed under section 134 or 141 of this title, or on which an action is commenced under section 145 of this title, and ending on the date of a final decision in favor of the applicant;

(B) shall be reduced by any time attributable to appellate review before the expiration of 3 years from the filing date of the application for patent; and

(C) shall be reduced for the period of time during which the applicant for patent did not act with due diligence, as determined by the Commissioner.

(4) LENGTH OF EXTENSION.-The total duration of all extensions of a patent under this subsection shall not exceed 5 years.

37 CFR 1.701 Extension of patent term due to examination delay under the Uruguay Round Agreements Act (original applications, other than designs, filed on or after June 8, 1995, and before May 29, 2000).

(a) A patent, other than for designs, issued on an application filed on or after June 8, 1995, is entitled to extension of the patent term if the issuance of the patent was delayed due to:

(1) interference proceedings under 35 U.S.C. 135(a); and/or

(2) the application being placed under a secrecy order under 35 U.S.C. 181; and/or

(3) appellate review by the Board of Patent Appeals and Interferences or by a Federal court under 35 U.S.C. 141 or 145, if the patent was issued pursuant to a decision reversing an adverse determination of patentability and if the patent is not subject to a terminal disclaimer due to the issuance of another patent claiming subject matter that is not patentably distinct from that under appellate review.

(b) The term of a patent entitled to extension under paragraph (a) of this section shall be extended for the sum of the periods of delay calculated under paragraphs (c)(1), (c)(2), (c)(3), and (d) of this section, to the extent that these periods are not overlapping, up to a maximum of five years. The extension will run from the expiration date of the patent.

(c)(1) The period of delay under paragraph (a)(1) of this section for an application is the sum of the following periods, to the extent that the periods are not overlapping:

(i) with respect to each interference in which the application was involved, the number of days, if any, in the period beginning on the date the interference was declared or redeclared to involve the application in the interference and ending on the date that the interference was terminated with respect to the application; and

(ii) the number of days, if any, in the period beginning on the date prosecution in the application was suspended by the Patent and Trademark Office due to interference proceedings under 35 U.S.C. 135(a) not involving the application and ending on the date of the termination of the suspension.

(2) The period of delay under paragraph (a)(2) of this section for an application is the sum of the following periods, to the extent that the periods are not overlapping:

(i) the number of days, if any, the application was maintained in a sealed condition under 35 U.S.C. 181;

(ii) the number of days, if any, in the period beginning on the date of mailing of an examiner's answer under § 1.193 in the application under secrecy order and ending on the date the secrecy order and any renewal thereof was removed;

(iii) the member of days, if any, in the period beginning on the date applicant was notified that an interference would be declared but for the secrecy order and ending on the date the secrecy order and any renewal thereof was removed; and

(iv) the number of days, if any, in the period beginning on the date of notification under § 5.3(c) and ending on the date of mailing of the notice of allowance under § 1.311.

(3) The period of delay under paragraph (a)(3) of this section is the sum of the number of days, if any, in the period beginning on the date on which an appeal to the Board of Patent Appeals and Interferences was filed under 35 U.S.C. 134 and ending on the date of a final decision in favor of the applicant by the Board of Patent Appeals and Interferences or by a Federal Court in an appeal under 35 U.S.C. 145.

(d) The period of delay set forth in paragraph (c)(3) shall be reduced by:

(1) any time during the period of appellate review that occurred before three years from the filing of the first national application for patent presented for examination; and

(2) any time during the period of appellate review, as determined by the Commissioner, during which the applicant for patent did not act with due diligence. In determining the due diligence of an applicant, the Commissioner may examine the facts and circumstances of the applicant's actions during the period of appellate review to determine whether the applicant exhibited that degree of timeliness as may reasonably be expected from, and which is ordinarily exercised by, a person during a period of appellate review.

(e) The provisions of this section apply only to original patents, except for design patents, issued on applications filed on or after June 8, 1995, and before May 29, 2000.

Opinion

35 U.S.C. § 154(b)(as amended by the "Uruguay Round Agreements Act," enacted December 8, 1994, as part of Public Law 103-465) provides for patent term extension for appellate review, interference and secrecy order delays in applications filed on or after June 8, 1995 and before May 29, 2000. 35 U.S.C. § 154(b)(as amended by the "American Inventors Protection Act of 1999," (AIPA) enacted November 29, 1999, as part of Public Law 106-113) provides for patent term adjustment for these administrative delays and others in applications filed on or after May 29, 2000. The patent statute only permits extension of patent term based on very specific criteria. The Office has no authority to grant any extension or adjustment of the term due to administrative delays except as authorized by 35 U.S.C. § 154.

The above-identified application was filed on May 12, 2000, which is after June 8, 1995 and before May 29, 2000. As a result, the application that may be eligible for patent term extension under 35 U.S.C. § 154. The application is not eligible for the patent term adjustment provisions under 37 CFR 1.702 - 1.705.

In order to implement 35 U.S.C. 154(b) (in effect between June 8, 1995 and May 28, 2000), the Office promulgated 37 CFR 1.701(a)(3) and 37 CFR 1.701(c)(3), which, consistent with the statute, requires a final decision in favor of the applicant by the Board of Patent Appeals and Interferences or by a Federal Court in an appeal under 35 U.S.C. 145 to be eligible for patent term extension.

The application was not issued due to an adverse determination of patentability by the BPAI, was not delayed due to an interference proceeding, nor was it subject to a secrecy order, as a result, this application is not eligible for the extension under 35 U.S.C. 154 in effect on June 8, 1995 and 37 CFR 1.701. While a Notice of Appeal and an Appeal Brief were filed in the application, the application was not allowed pursuant to an adverse determination of patentability by the BPAI, nor was the application remanded to the Examiner by the BPAI. The Examiner reopened prosecution in response to the appeal brief as stated in the Office action mailed on January 16, 2007. The Office has no authority to grant an extension of the term due to administrative delays except as authorized by 35 U.S.C. § 154. Since, the application was not issued due to an adverse determination of patentability by the BPAI, the Office is without authority to grant the application patent term extension under 35 U.S.C. 154(b)(2) and 37 CFR 1.701.

With respect to the 188 page appendix, it would greatly benefit the Office if **applicant did not provide copies of papers**, which were previously submitted and/or **a complete copies of papers mailed by the Office**, as it unnecessarily increases the cost to the Office. See 37 CFR 1.4(b).

After mailing of this decision, the above-identified application will be returned to Office of Publications for further processing. The patent, if issued, will include an indication that the patent term is extended by zero **(0) days.**

The delay in issuance of petitioner's application is regretted.

The rules and statutory provisions governing the operations of the U.S. Patent and Trademark Office require payment of a fee on filing each petition. *See* 35 U.S.C. § 41(a)(7). The required $400 fee for the petition under 37 CFR 1.183(b) has been paid. Petitioner's deposit account has been charged a petition fee.

Telephone inquiries with regard to this communication should be directed to Mark O. Polutta at (571) 272-7709.

Mark O. Polutta
Senior Legal Advisor
Office of Patent Legal Administration
Office of the Deputy Commissioner
for Patent Examination Policy

UNITED STATES PATENT AND TRADEMARK OFFICE

Commissioner for Patents
United States Patent and Trademark Office
P.O. Box 1450
Alexandria, VA 22313-1450
www.uspto.gov

Paper No. 14

ZUCOTTO WIRELESS INC.
16644 WEST BERNARDO DRIVE
SUITE 301
SAN DIEGO, CA 92127

COPY MAILED
JAN 31 2006
OFFICE OF PETITIONS

In re Application of :
Guillaume Comeau :
Application No. 09/570,252 :
Filed: May 12, 2000 :
Attorney Docket No. SMA6171P0010US :

ON PETITION

This is a decision on the petition under 37 CFR 1.137(b), filed December 15, 2005, to revive the above-identified application.

The petition is **GRANTED**.

The above-identified application became abandoned for failure to reply in a timely manner to the non-final Office action mailed September 26, 2003, which set a shortened statutory period for reply of three (3) months. No extension of time under the provisions of 37 CFR 1.136(a) were obtained. Accordingly, the above-identified application became abandoned on December 27, 2003.

The file does not indicate a change of address has been submitted, although the address given on the petition differs from the address of record. If appropriate, a change of address should be filed in accordance with MPEP 601.03. A courtesy copy of this decision is being mailed to the address given on the petition; however, the Office will mail all future correspondence solely to the address of record.

Telephone inquiries concerning this decision should be directed to Irvin Dingle at (571) 272-3210.

This application is being forwarded to Technology Center AU 2126 for further processing.

Irvin Dingle
Petitions Examiner
Office of Petitions

cc: William J. Kolegraff
3119 Turnberry Way
Jamul, CA 91935

PTO/SB/66 (03-09)
Approved for use through 03/31/2012. OMB 0651-0016
U.S. Patent and Trademark Office: U.S. DEPARTMENT OF COMMERCE
Under the Paperwork Reduction Act of 1995, no persons are required to respond to a collection of information unless it displays valid OMB control number.

PETITION TO ACCEPT UNINTENTIONALLY DELAYED PAYMENT OF MAINTENANCE FEE IN AN EXPIRED PATENT (37 CFR 1.378(c))

Patent Number	Issue Date (YYYY-MM-DD)	Application Number	Filing Date (YYYY-MM-DD)	Docket Number (if applicable)
6,864,228	2005-03-08	09/570,275	2000-05-12	3524.010

CAUTION: Maintenance fee (and surcharge, if any) payment must correctly identify: (1) the patent number and (2) the application number of the actual U.S. application leading to issuance of that patent to ensure the fee(s) is/are associated with the correct patent. 37 CFR 1.366(c) and (d).

SMALL ENTITY

☐ Patentee claims, or has previously claimed, small entity status. See 37 CFR 1.27.

LOSS OF ENTITLEMENT TO SMALL ENTITY STATUS

☐ Patentee is no longer entitled to small entity status. See 37 CFR 1.27(g)

NOT Small Entity		Small Entity	
Fee	Code	Fee	Code
◉ 3 ½ year	(1551)	○ 3 ½ year	(2551)
○ 7 ½ year	(1552)	○ 7 ½ year	(2552)
○ 11 ½ year	(1553)	○ 11 ½ year	(2553)

SURCHARGE

The surcharge required by 37 CFR 1.20(i)(2) (Fee Code 1558) must be paid as a condition of accepting unintentionally delayed payment of the maintenance fee.

MAINTENANCE FEE (37 CFR 1.20(e)-(g))

The appropriate maintenance fee must be submitted with this petition.

STATEMENT

THE UNDERSIGNED CERTIFIES THAT THE DELAY IN PAYMENT OF THE MAINTENANCE FEE TO THIS PATENT WAS UNINTENTIONAL

PETITIONER(S) REQUEST THAT THE DELAYED PAYMENT OF THE MAINTENANCE FEE BE ACCEPTED AND THE PATENT REINSTATED

THIS PORTION MUST BE COMPLETED BY THE SIGNATORY OR SIGNATORIES

37 CFR 1.378(d) states: "Any petition under this section must be signed by an attorney or agent registered to practice before the Patent and Trademark Office, or by the patentee, the assignee, or other party in interest."

I certify, in accordance with 37 CFR 1.4(d)(4) that I am

◉ An attorney or agent registered to practice before the Patent and Trademark Office

○ A sole patentee

○ A joint patentee; I certify that I am authorized to sign this submission on behalf of all the other patentees.

○ A joint patentee; all of whom are signing this e-petition

○ The assignee of record of the entire interest

Patent Practitioner			
A signature of the applicant or representative is required in accordance with 37 CFR 1.33 and 10.18. Please see 37 CFR 1.4(d) for the form of the signature			
Signature	/Stephan A. Pendorf/	Date (YYYY-MM-DD)	2010-06-24
Name	Stephan A. Pendorf	Registration Number	32665

This collection of information is required by 37 CFR 1.378(c). The information is required to obtain or retain a benefit by the public which is to file (and by the USPTO to process) an application. Confidentiality is governed by 35 U.S.C. 122 and 37 CFR 1.11 and 1.14. This collection is estimated to take 1 hour to complete, including gathering, preparing, and submitting the completed application form to the USPTO. Time will vary depending upon the individual case. Any comments on the amount of time you require to complete this form and/ or suggestions for reducing this burden, should be sent to the Chief Information Officer, U.S. Patent and Trademark Office, U.S. Department of Commerce, P.O. Box 1450, Alexandria, VA 22313-1450. DO NOT SEND FEES OR COMPLETED FORMS TO THIS ADDRESS. **This form can only be used when in conjunction with EFS-Web. If this form is mailed to the USPTO, it may cause delays in reinstating the patent.**

Privacy Act Statement

The Privacy Act of 1974 (P.L. 93-579) requires that you be given certain information in connection with your submission of the attached form related to a patent application or patent. Accordingly, pursuant to the requirements of the Act, please be advised that: (1) the general authority for the collection of this information is 35 U.S.C. 2(b)(2); (2) furnishing of the information solicited is voluntary; and (3) the principal purpose for which the information is used by the U.S. Patent and Trademark Office is to process and/or examine your submission related to a patent application or patent. If you do not furnish the requested information, the U.S. Patent and Trademark Office may not be able to process and/or examine your submission, which may result in termination of proceedings or abandonment of the application or expiration of the patent.

The information provided by you in this form will be subject to the following routine uses:

1. The information on this form will be treated confidentially to the extent allowed under the Freedom of Information Act (5 U.S.C. 552) and the Privacy Act (5 U.S.C. 552a). Records from this system of records may be disclosed to the Department of Justice to determine whether the Freedom of Information Act requires disclosure of these records.

2. A record from this system of records may be disclosed, as a routine use, in the course of presenting evidence to a court, magistrate, or administrative tribunal, including disclosures to opposing counsel in the course of settlement negotiations.

3. A record in this system of records may be disclosed, as a routine use, to a Member of Congress submitting a request involving an individual, to whom the record pertains, when the individual has requested assistance from the Member with respect to the subject matter of the record.

4. A record in this system of records may be disclosed, as a routine use, to a contractor of the Agency having need for the information in order to perform a contract. Recipients of information shall be required to comply with the requirements of the Privacy Act of 1974, as amended, pursuant to 5 U.S.C. 552a(m).

5. A record related to an International Application filed under the Patent Cooperation Treaty in this system of records may be disclosed, as a routine use, to the International Bureau of the World Intellectual Property Organization, pursuant to the Patent Cooperation Treaty.

6. A record in this system of records may be disclosed, as a routine use, to another federal agency for purposes of National Security review (35 U.S.C. 181) and for review pursuant to the Atomic Energy Act (42 U.S.C. 218(c)).

7. A record from this system of records may be disclosed, as a routine use, to the Administrator, General Services, or his/her designee, during an inspection of records conducted by GSA as part of that agency's responsibility to recommend improvements in records management practices and programs, under authority of 44 U.S.C. 2904 and 2906. Such disclosure shall be made in accordance with the GSA regulations governing inspection of records for this purpose, and any other relevant (i.e., GSA or Commerce) directive. Such disclosure shall not be used to make determinations about individuals.

8. A record from this system of records may be disclosed, as a routine use, to the public after either publication of the application pursuant to 35 U.S.C. 122(b) or issuance of a patent pursuant to 35 U.S.C. 151. Further, a record may be disclosed, subject to the limitations of 37 CFR 1.14, as a routine use, to the public if the record was filed in an application which became abandoned or in which the proceedings were terminated and which application is referenced by either a published application, an application open to public inspections or an issued patent.

9. A record from this system of records may be disclosed, as a routine use, to a Federal, State, or local law enforcement agency, if the USPTO becomes aware of a violation or potential violation of law or regulation.

UNITED STATES PATENT AND TRADEMARK OFFICE

Commissioner for Patents
United States Patent and Trademark Office
P.O. Box 1450
Alexandria, VA 22313-1450
www.uspto.gov

In re Patent No. 6864228
Issue Date: March 8,2005
Application No. 09570275
Filed: May 12,2000
Attorney Docket No. 3524.010

:
:DECISION GRANTING PETITION
:UNDER 37 CFR 1.378(c)
:

This is a decision on the electronic petition, filed June 24,2010 ,under 37 CFR 1.378(c) to accept the unintentionally delayed payment of the 3.5 year maintenance fee for the above-identified patent.

The petition is **GRANTED**.

The maintenance fee is accepted, and the above-identified patent reinstated as of June 24,2010 .
This decision also constitutes notice that the fee has been accepted. An electronic copy of the petition and this decision has been created as an entry in the Image File Wrapper. Nevertheless, petitioner should print and retain an independent copy.

Telephone inquiries related to this electronic decision should be directed to the Electronic Business Center at 1-866-217-9197.

UNITED STATES PATENT AND TRADEMARK OFFICE

Commissioner for Patents
United States Patent and Trademark Office
Washington, D.C. 20231
www.uspto.gov

Paper No. 13

COPY MAILED

DEC 1 8 2002

OFFICE OF PETITIONS

William S. Lovell
6435 N. E. Neptune Drive
Lincoln City, OR 97367

In re Application of
William R. Peitzke et al.
Application No. 09/570,323
Filed: May 12, 2000
Attorney Docket No. 113055-0184

ON PETITION

This is a decision on the petition under 37 CFR 1.137(b), filed November 6, 2002, to revive the above-identified application.

The petition is **GRANTED**.

The above-identified application became abandoned for failure to reply in a timely manner to the non-final Office action mailed January 16, 2002, which set a shortened statutory period for reply of three (3) months. No extensions of time under the provisions of 37 CFR 1.136(a) were obtained. Accordingly, the above-identified application became abandoned on April 17, 2002.

37 CFR 1.137(c) requires a terminal disclaimer dedicating to the public a terminal part of the term of any patent granted on the above-identified application or any patent granted on any continuing application that contains a specific reference under 35 U.S.C. 120, 121, or 365(c) to the above-identified application. Since the application is not a utility or plant application filed before June 8, 1995, a terminal disclaimer is not required. Accordingly, the terminal disclaimer filed with the instant petition is unnecessary. Petitioner may request a refund of the $55 fee by writing the Office of Finance, Refund Section. A copy of this decision should accompany the request.

The application is being forwarded to Technology Center AU 3748 for further processing.

Telephone inquiries concerning this decision should be directed to Latrice Bond at (703) 308-6911.

Latrice Bond

Latrice Bond
Petitions Examiner
Office of Petitions
Office of the Deputy Commissioner
for Patent Examination Policy

BEST AVAILABLE COPY

UNITED STATES PATENT AND TRADEMARK OFFICE

Commissioner for Patents
United States Patent and Trademark Office
P.O. Box 1450
Alexandria, VA 22313-1450
www.uspto.gov

Paper No. 25

EDWARD G POPLAWSKI ESQ
SIDLEY AUSTIN BROWN & WOOD LLP
555 WEST FIFTH STREET
LOS ANGELES CA 90013-1010

COPY MAILED

MAY 17 2004

OFFICE OF PETITIONS

In re Application of :
Carol W. Readhead :
Application No. 09/570,357 : ON PETITION
Filed: May 12, 2000 :
Attorney Docket No. CEDAR-044330 :

This is a decision on the petition under 37 CFR 1.137(b), filed February 9, 2004, to revive the above-identified application.

The petition under 37 CFR 1.137(b) is **GRANTED**.

The above-identified application became abandoned for failure to timely file a proper response to the non-final Office action mailed January 15, 2003. A Notice of Abandonment was mailed on September 26, 2003.

With the instant petition, petitioner paid the petition fee, filed a proper reply in the form of an amendment, and made the proper statement of unintentional delay.

The application file is being forwarded to Group Art Unit 1636 for consideration of the amendment filed March 30, 2004.

Telephone inquiries concerning this decision should be directed to the undersigned at (703) 305-0272.

Cliff Congo
Petitions Attorney
Office of Petitions

UNITED STATES DEPARTMENT OF COMMERCE
Patent and Trademark Office
ASSISTANT SECRETARY OF COMMERCE AND
COMMISSIONER OF PATENTS AND TRADEMARKS
Washington, DC 2023

October 16, 2002

Arthur J. Steiner
McDermott, Will & Emery
600 13th Street, N. W.
Washington, DC 20005-3096

In re application of:
Shinji Ishikawa, et al DECISION ON PETITION
Serial No.: 09/570,392
Filed: May 12, 2000

For: OPTICAL COMPONENT

This is a decision on the petition received on September 3, 2002, to withdraw the holding of abandonment in the above-identified application.

The above-identified application became abandoned for failure to reply within the meaning of 37 C.F.R. 1.113 in timely manner to the Notice to File Missing Parts of Application mailed August 2, 2000. Which set a shortened statutory period for reply of two (2) months. Accordingly, this application became abandoned October 3, 2000. A notice of abandonment was mailed on August 8, 2002.

On September 3, 2002, the office received a communication from the attorney of record. Enclosed was an acknowledgment that the attorney responded to the Notice to File Missing Part on September 12, 2000.

The evidence submitted is sufficient to establish that the petitioners responded to the Notice to File Missing Parts of Application on September 12, 2000.

The petition is hereby GRANTED.

The Notice to File Missing Parts documents that were received on September 12, 2000, is lost. The attorney is given two month from the date of this decision to submit the documents to complete the above application.

Telephone inquiries concerning this matter may be directed to Doshie E. Day at (703) 308-3640.

Doshie E. Day
Program Management Assistant
Office Initial Patent Examination

UNITED STATES PATENT AND TRADEMARK OFFICE

Commissioner for Patents
United States Patent and Trademark Office
P.O. Box 1450
Alexandria, VA 22313-1450
www.uspto.gov

Paper No. 20

SAMUEL C. MILLER III
BURNS DOANE SWECKER & MATHIS LLP
P.O. BOX 1404
ALEXANDRIA VA 22313-1404

COPY MAILED

APR 27 2004

OFFICE OF PETITIONS

ON PETITION

In re Application of :
Pinhas Shpater :
Application No. 09/570,415 :
Filed: May 12, 2000 :
Attorney Docket No. 026675-047 :

This is a decision on the petition, filed April 23, 2004, under 37 CFR 1.313(c)(2) to withdraw the above-identified application from issue after payment of the issue fee.

The petition is **GRANTED**.

The above-identified application is withdrawn from issue for consideration of a submission under 37 CFR 1.114 (request for continued examination). See 37 CFR 1.313(c)(2).

Petitioner is advised that the issue fee paid on February 24, 2004 in the above-identified application cannot be refunded. If, however, the above-identified application is again allowed, petitioner may request that it be applied towards the issue fee required by the new Notice of Allowance.[1]

Telephone inquiries should be directed to the undersigned at (703) 305-8859.

After receipt of the file in the Office of Petitions, the application will be forwarded to Technology Center AU 2642 for processing of the request for continued examination under 37 CFR 1.114.

Karen Creasy

Karen Creasy
Petitions Examiner
Office of Petitions
Office of the Deputy Commissioner
for Patent Examination Policy

---

[1] The request to apply the issue fee to the new Notice may be satisfied by completing and returning the new Issue Fee Transmittal Form PTOL-85(b), which includes the following language thereon: "Commissioner for Patents is requested to apply the Issue Fee and Publication Fee (if any) or re-apply any previously paid issue fee to the application identified above." Petitioner is advised that, whether a fee is indicated as being due or not, the Issue Fee Transmittal Form **must** be completed and timely submitted to avoid abandonment. Note the language in bold text on the first page of the Notice of Allowance and Fee(s) Due (PTOL-85).

UNITED STATES PATENT AND TRADEMARK OFFICE

UNDER SECRETARY OF COMMERCE FOR INTELLECTUAL PROPERTY AND
DIRECTOR OF THE UNITED STATES PATENT AND TRADEMARK OFFICE
WASHINGTON, DC 20231
www.uspto.gov

RECEIVED
OCT 2 4 2003
Technology Center 2600

Paper No. 11

2697

Corporate Patent Counsel
Philips Electronics North America Corporation
580 White Plains Road
Tarrytown, NY 10591

MAIL
SEP 2 9 2003
DIRECTOR OFFICE
TECHNOLOGY CENTER 2600

In re Application of
Hansra Patent Services
Application No. 09570490
Filed: May 12, 2000
Title: Method and Apparatus for Improving Servo Stability in Read Heads While Writing

NOTICE OF WITHDRAWAL FROM ISSUE UNDER 37 C.F.R. § 1.313(b)

The above-identified application is hereby withdrawn from issue after payment of the issue fee due to unpatentability of at least one or more claims. See 37 C.F.R. § 1.313(b).

The above-identified application is hereby withdrawn from issue.

The issue fee is refundable upon written request. If however, the application is again found allowable, the issue fee can be applied toward payment of the issue fee in the amount identified on the new Notice of Allowance and Issue Fee Due upon written request. This request and any balance due must be received on or before the due date noted in the new Notice of Allowance in order to prevent abandonment of the application.

Telephone inquiries should be directed to Richemond Dorvil at (703) 305-9645.

The above-identified application is being forwarded to the examiner for prompt appropriate action, including notifying applicant of the new status of this application.

Mark R. Powell

Mark R. Powell
Director, Technology Center 2600
Communications

03 OCT -9 AM 8:55

UNITED STATES PATENT AND TRADEMARK OFFICE

Commissioner for Patents
United States Patent and Trademark Office
P.O. Box 1450
Alexandria, VA 22313-1450
www.uspto.gov

Paper No. 21

Westman Champlin & Kelly
Suite 1400
900 Second Avenue South
Minneapolis, MN 55402-3319

COPY MAILED

MAY 17 2007

OFFICE OF PETITIONS

In re Application of
Bruce A. Liikanen, et. al.
Application No. 09/570,490
Filed: May 12, 2000
Attorney Docket No. 3123-324

ON PETITION

This is a decision on the petition under 37 CFR 1.137(b), filed on March 15, 2005, to revive the above-identified application. The delay in responding is sincerely regretted.

The application became abandoned for failure to respond to the non-final Office action mailed December 12, 2003. A Notice of Abandonment was mailed on December 13, 2004.

The petition satisfies the requirements of 37 CFR 1.137(b) in that petitioner has supplied (1) the reply in the form of an amendment; (2) the petition fee of $1,500; and (3) an adequate statement of unintentional delay. Therefore, the petition is **GRANTED**.

In accordance with 37 CFR 1.34(a), the Power of Attorney filed on April 20, 2007 has been accepted and made of record.

This application file is being referred to Technology Center Art Unit 2651, for review of the amendment filed with the instant petition.

Telephone inquiries concerning this decision should be directed to the undersigned at (571) 272-3226.

Andrea Smith
Petitions Examiner
Office of Petitions

Pet. Dec.

UNITED STATES PATENT and TRADEMARK OFFICE

COMMERCE FOR PATENTS
UNITED STATES PATENT AND TRADEMARK OFFICE
P.O. BOX 1450
ALEXANDRIA, VA22313-1450 20231
WWW.USPTO.GOV

Mailed: JUL - 6 2004

~~MAY 12 2004~~

DWW

Paper No.

In re application of
Kellogg et al.
Serial No. 09/570,492
Filed: May 12, 2000
For: CENTRIPETALLY MOTIVATED MICROFLUIDICS SYSTEM FOR PERFORMING IN VITRO HYBRIDIZATION AND AMPLIFICATION OF NUCLEIC ACIDS

DECISION ON PETITION

This is a decision on the REQUEST TO RESCIND ABANDONMENT, filed December 31, 2003 for failure to respond to the office action dated June 4, 2003. Applicants assert that a proper, timely response was mailed on December 4, 2003.

DECISION

Since petitioner asserts that a timely response was mailed to the USPTO, the request is accepted as a petition under 37 C.F.R. 1.181 (no fee). A review of the petitioner's evidence provided with the instant petition indicates that the request has merit. The submitted evidence is a copy of the return postcard sent with the response (Exhibit B) and the stamped postcard (Exhibit C) with the date received by the USPTO, which indicates that a response was timely filed on December 4, 2003.

Therefore, the Notice of Abandonment dated December 15, 2003 is hereby withdrawn. Hence, the case is returned to pending status. The application shall be returned to the LIE for entering of the response to the Non-Final rejection. After such is completed, the case will be returned to the examiner for prompt consideration.

The Petition is **GRANTED**.

JMStone

Jacqueline Stone, Director
Technology Center 1700
Chemical and Materials Engineering

McDonnell Boehnen Hulbert & Berghoff
300 South Wacker Drive
32nd Floor
Chicago, Illinois 60606

UNITED STATES PATENT AND TRADEMARK OFFICE

COMMISSIONER FOR PATENTS
UNITED STATES PATENT AND TRADEMARK OFFICE
WASHINGTON, D.C. 20231
www.uspto.gov

Paper No. 9

John L. Isaac, Esq.
Isaac & Associates
143 Union Blvd., Suite 900
Lakewood, CO 80228-1829

COPY MAILED

FEB 1 1 2003

OFFICE OF PETITIONS

In re Application of
Ray Thomas Bishop
Application No. 09/570,503
Filed: May 13, 2000
Attorney Docket Number: 7074.02.01

ON PETITION

This is a decision on the petition filed January 8, 2003, under 37 CFR 1.137(a) to revive the above-identified application.

The petition to revive under 37 CFR § 1.137(a) is **DISMISSED**.

Any request for reconsideration must be submitted within TWO (2) MONTHS from the mail date of this decision. Extensions of time under 37 CFR § 1.136(a) are permitted. The reconsideration request should include a cover letter entitled "Renewed Petition under 37 CFR § 1.137(a)." This is **not** a final agency action within the meaning of 5 U.S.C. § 704.

This above-identified application became abandoned for failure to timely file a reply to the non-final Office Action of August 29, 2001. An incomplete request for a two month extension of time was submitted with an amendment on January 29, 2002. A Notice of Non-Compliant Amendment (37 CFR 1.121) was mailed on February 20, 2002 which set a reply period of thirty days (March 22, 2002) to supply the omitted clean version of the amended claim(s) pursuant to 37 CFR 1.121(c)(1)(I). This application became abandoned on November 30, 2001. A Notice of Abandonment was mailed on April 9, 2002.

PETITION TO REVIVE UNDER 37 CFR § 1.137(a)

A grantable petition under 37 CFR § 1.137(a) must be accompanied by:
(1) the required reply,[1]
(2) the petition fee,
(3) a showing <u>to the satisfaction of the Commissioner</u> that the <u>entire</u> delay in filing the required reply from the due date for the reply until the filing of a grantable petition pursuant to this paragraph was <u>unavoidable</u>, and
(4) a terminal disclaimer and fee if the application was filed on or before June 8, 1995 or if the application is a design application.

The instant petition lacks item (3).

As to item (3), the showing of record is not sufficient to establish to the satisfaction of

[1] In a nonprovisional application abandoned for failure to prosecute, the required reply may be met by the filing of a continuing application. In an application or patent, abandoned or lapsed for failure to pay the issue fee or any portion thereof, the required reply must be the payment of the issue fee or any outstanding balance thereof.

the Commissioner that the delay was unavoidable within the meaning of 37 CFR §1.137(a).

The Office may revive an abandoned application if the delay in responding to the relevant outstanding office requirement is shown to the satisfaction of the Commissioner to have been "unavoidable." See, 37 CFR § 1.137(a)(3). Decisions on reviving abandoned applications have adopted the reasonably prudent person standard in determining if the delay was unavoidable. Ex parte Pratt, 1887 Dec. Comm'r Pat. 31, 32-33 (Comm'r Pat. 1887) (the term "unavoidable" is applicable to ordinary human affairs, and requires no more greater care or diligence than is generally used and observed by prudent and careful men in relation to their most important business."); In re Mattullath, 38 App. D.C. 497, 514-15 (D.C. Cir. 1912); Ex parte Henrich, 1913 Dec. Comm'r Pat. 139, 141 (Comm'r Pat. 1913). In addition, decisions on revival are made on a "case by case basis, taking all the facts and circumstances into account." Smith v. Mossinghoff, 671 F.2d 533, 538, 213 USPQ 977, 982 (D.C. Cir. 1982). A petition to revive an application as unavoidably abandoned cannot be granted where petitioner has failed to meet his or her burden of establishing the cause of the unavoidable delay. Haines v. Quigg, 673 F. Supp. 314, 5 USPQ2D 1130 (N.D. Ind. 1987).

The showing of record is inadequate to establish unavoidable delay within the meaning of 35 U.S.C. § 133 and 37 CFR 1.137(a).[2] Specifically, an application is "unavoidably" abandoned only where petitioner, or counsel for petitioner, takes all action necessary for a proper response to the outstanding Office action, but through the intervention of unforeseen circumstances, such as failure of mail, telegraph, facsimile, or the negligence of otherwise reliable employees, the response is not timely received in the Office.[3]

In the present petition, petitioner has not presented sufficient showing of unavoidable delay. Petitioner asserts the application was abandoned because petitioner's response to the August 29, 2001 Office Action, while received by the U.S. Patent and Trademark Office, was not forwarded to the examiner. Petitioner further states he placed a stop payment on the $200 check he provided to obtain a two month extension of time because the check was never presented for payment. In support of petitioner's assertion a USPTO stamped post card receipt has been provided.

A review of the official record indicates a response to the non-final Office Action was indeed received along with a request for two month extension of time on January 29, 2002. Petitioner submitted a check in the amount of $200.00 to attain a two month extension of time. Contrary to petitioner's records the check was presented for payment but was returned for insufficient funds. Thus, the amendment submitted on January 29, 2002 was untimely. Petitioner has not provided a sufficient showing to establish unavoidable delay.

Although petitioner indicates a change of correspondence address was submitted on January 29, 2002, a review of the official record does not show such a request.[4] However, the request to change correspondence address submitted with the petition

---

[2] See MPEP 711(c)(III)(C)(2) for a discussion of the requirements for a showing of unavoidable delay.

[3] Ex parte Pratt, 1887 Dec. Comm'r Pat. 31 (Comm'r Pat. 1887).

[4] Petitioner is reminded he is under a duty to promptly notify the patent office of any change of correspondence address. See MPEP 711.03 (C)(III)(2). Petitioner did not inform the USPTO of his change address for over a year.

has been entered and made of record.

Petitioner submitted a payment for a two (2) month extension of time with the instant petition. However, pursuant to 37 CFR 1.136, an extension of time must be filed prior to the expiration of the maximum extendable period for reply. See In re Application of S., 8 USPQ2d 1630, 1631 (Comm'r Pats. 1988) Petitioner's six (6) month maximum extendable period expired on March 1, 2001. Petitioner is ineligible for any extensions of time. The application is being forwarded to the Office of Finance, Refund Section to credit the $200.00 extension of time fee in the form of a treasury check.

Alternative Venue

Petitioner may wish to consider filing a petition to revive based on unintentional abandonment under 37 CFR 1.137(b). A grantable petition pursuant to 37 CFR § 1.137(b) must be accompanied by the required reply, the required petition fee, and a statement that the **entire** delay in filing the required reply from the due date for the reply until the filing of a grantable petition pursuant to 37 CFR § 1.137(b) was unintentional.

The filing of a petition under 37 CFR § 1.137(b) cannot be intentionally delayed, and therefore, must be filed promptly. A person seeking revival due to unintentional delay cannot make a statement that the delay was unintentional unless the entire delay, including the delay from the date it was discovered that the application was abandoned until the filing of the petition to revive under 37 CFR § 1.137(b), was unintentional. A statement that the delay was unintentional is not appropriate if petitioner intentionally delayed the filing of a petition for revival under 37 CFR § 1.137(b).

Further correspondence with respect to this matter should be addressed as follows:

By mail: Commissioner for Patents
Box DAC
Washington, D.C. 20231

By facsimile: (703) 308-6916
Attn: Office of Petitions

By hand: Office of Petitions
2201 South Clark Place
Crystal Plaza 4, Suite 3C23
Arlington, VA 22202

Telephone inquiries should be directed to Petitions Attorney Charlema R. Grant at (703) 306-0251.

Beverly M. Flanagan
Supervisory Petitions Examiner
Office of Petitions

Charlema R. Grant
Petitions Attorney
Office of Petitions

UNITED STATES PATENT AND TRADEMARK OFFICE

COMMISSIONER FOR PATENTS
UNITED STATES PATENT AND TRADEMARK OFFICE
WASHINGTON, D.C. 20231
www.uspto.gov

#12

Paper No. 12

John L. Isaac, Esq.
Isaac & Associates
143 Union Blvd., Suite 900
Lakewood, CO 80228-1829

COPY MAILED

APR 2 2 2003

OFFICE OF PETITIONS

In re Application of
Ray Thomas Bishop
Application No. 09/570,503
Filed: May 13, 2000
Attorney Docket Number: 7074.02.01

ON PETITION

This is a decision on the petition under 37 CFR 1.137(b), filed August 24, 2001, to revive the above-identified application.

This above-identified application became abandoned for failure to timely file a reply to the non-final Office Action of August 29, 2001. An incomplete request for a two month extension of time was submitted with an amendment on January 29, 2002. A Notice of Non-Compliant Amendment (37 CFR 1.121) was mailed on February 20, 2002 which set a reply period of thirty days (March 22, 2002) to supply the omitted clean version of the amended claim(s) pursuant to 37 CFR 1.121(c)(1)(I). This application became abandoned on November 30, 2001. A Notice of Abandonment was mailed on April 9, 2002. A petition filed under 37 CFR 1.137(a) was dismissed on February 11, 2003

This Petition is hereby **Granted**.

The office hereby acknowledges the receipt of the Amendment submitted with the instant petition.

This application is being forwarded to Technology Center 3600 for further processing.

Telephone inquiries concerning this matter should be directed to the undersigned at (703) 306-0251.

Charlema R. Grant
Petitions Attorney
Office of Petitions

UNITED STATES PATENT AND TRADEMARK OFFICE

Commissioner for Patents
United States Patent and Trademark Office
P.O. Box 1450
Alexandria, VA 22313-1450
www.uspto.gov

REED SMITH, LLP
TWO EMBARCADERO CENTER
SUITE 2000
SAN FRANCISCO, CA 94111

COPY MAILED

DEC 28 2005

OFFICE OF PETITIONS

In re Application of

Feng, et al.

Application No. 09/570,709

Filed: May 15, 2000

Attorney Docket No. 21891.01600

DECISION ON PETITION

This is a decision on the petition under 37 CFR §1.137(b), November 7, 2005, to revive the above-identified application.

The petition is **dismissed**.

Any request for reconsideration of this decision must be submitted within TWO (2) MONTHS from the mail date of this decision. Extensions of time under 37 CFR 1.136(a) are permitted. The reconsideration request should include a cover letter entitled "Renewed Petition" under 37 CFR 1.137(b)."

This application became abandoned for failure to file a proper and timely response to the final Office action mailed February 5, 2004, which set a shortened statutory period for reply of three-months from its mailing date. A response was filed on August 9, 2004, with a request for an extension of time within the third month. An Advisory Action mailed October 4, 2004, indicated that the August 9, 2004, response failed to place the application in condition for allowance. The application became abandoned on August 6, 2004. A Notice of Abandonment was mailed June 1, 2005.

Effective December 1, 1997, the provisions of 37 CFR 1.137(b) now provide that where the delay in reply was unintentional, a petition may be filed to revive an abandoned application or a lapsed patent pursuant to 37 CFR 1.137(b). A grantable petition pursuant to 37 CFR 1.137(b) must be accompanied by:

(1) the required reply, unless previously filed. In a non-provisional application abandoned for failure to prosecute, the required reply may be met by the filing of a continuing application. In an application or patent, abandoned or lapsed for failure to pay the issue fee, or any portion thereof, the required reply must be the payment of the issue fee or any outstanding balance thereof.

(2) the petition fee as set forth in 37 CFR 1.17(m);

(3) a statement that the entire delay in filing the required reply from the due date for the reply until the filing of a grantable petition pursuant to 37 CFR 1.137(b) was unintentional. The Commissioner may require additional information where there is a question whether the delay was unintentional; and

(4) any terminal disclaimer (and fee set forth in 37 CFR 1.20(d)) required pursuant to 37 CFR 1.137(c).

The petition does not satisfy item (1) above.

In the instant petition, petitioner maintains that the response filed August 9, 2004, in the form of a declaration under 37 CFR 1.131 placed the application in condition for allowance. Petitioner again filed the declaration with the petition as the reply required by 37 CFR 1.137(b). The undersigned consulted with the Technology Center 2100, Group Art Unit (GAU) 2123 regarding the adequacy of the declaration under 37 CFR 1.131 and was advised that the declaration is deficient and does not place the application in condition for allowance. The petition must be dismissed because a proper reply to the final Office action has not been filed. Petitioner should contact GAU 2123 to discuss any concerns regarding the adequacy of the declaration under 37 CFR 1.131 or the preparation of reply to the final Office action.

Further correspondence with respect to this matter should be addressed as follows:

By mail: Commissioner for Patents
United States Patent and Trademark Office
Box 1450
Alexandria, VA 22313-1450

By facsimile: (571) 273-8300
Attn: Office of Petitions

Telephone inquiries concerning this decision may be directed to the undersigned at (571) 272-3222.

Kenya A. McLaughlin

Kenya A. McLaughlin
Petitions Attorney
Office of Petitions

UNITED STATES PATENT AND TRADEMARK OFFICE

Commissioner for Patents
United States Patent and Trademark Office
P.O. Box 1450
Alexandria, VA 22313-1450
www.uspto.gov

REED SMITH, LLP
TWO EMBARCADERO CENTER
SUITE 2000
SAN FRANCISCO, CA 94111

COPY MAILED

APR 19 2006

OFFICE OF PETITIONS

In re Application of

Feng, et al.

Application No. 09/570,709

Filed: May 15, 2000

Attorney Docket No. 21891.01600

: DECISION ON PETITION

This is a decision on the renewed petition under 37 CFR 1.137(b), filed March 31, 2006, to revive the above-identified application.

The renewed petition is **GRANTED**.

This application became abandoned for failure to file a proper and timely response to the final Office action mailed February 5, 2004, which set a shortened statutory period for reply of three-months from its mailing date. A response was filed on August 9, 2004, with a request for an extension of time within the third month. An Advisory Action mailed October 4, 2004, indicated that the August 9, 2004, response failed to place the application in condition for allowance. The application became abandoned on August 6, 2004. A Notice of Abandonment was mailed June 1, 2005. A petition under 37 CFR 1.137(b) was filed on November 7, 2005, and dismissed by a decision mailed December 28, 2005. The instant renewed petition was filed on March 31, 2006.

The Request for Continued Examination and amendment filed March 31, 2006, are noted.

The amount of $1,500.00 will be refunded to deposit account 50-2603 as it appears that the fee for the instant petition was charged twice. There is no fee of a renewed petition under 37 CFR 1.137(b).

The application file is being forwarded to Technology Center 2100, GAU 2123 for further processing.

Telephone inquiries concerning this decision should be directed to the undersigned at (571) 272-3222.

Kenya A. McLaughlin
Petitions Attorney
Office of Petitions

UNITED STATES PATENT AND TRADEMARK OFFICE

Commissioner for Patents
United States Patent and Trademark Office
P.O. Box 1450
Alexandria, VA 22313-1450
www.uspto.gov

REED SMITH, LLP
TWO EMBARCADERO CENTER
SUITE 2000
SAN FRANCISCO, CA 94111

COPY MAILED

MAR 1 3 2008

OFFICE OF PETITIONS

In re Application of	:	
FENG, Dan et al.	:	
Application No. 09/570,709	:	DECISION ON PETITION
Filed: May 15, 2000	:	TO WITHDRAW
Attorney Docket No. **7058652001**	:	FROM RECORD
	:	

This is a decision on the Request to Withdraw as attorney or agent of record under 37 C.F.R. § 1.36(b), filed December 13, 2007.

The request is **NOT APPROVED** as moot.

A review of the file record indicates that the power of attorney to REED SMITH, LLP has been revoked by the assignee of the patent application on December 21, 2007. Accordingly, the request to withdraw under 37 C.F.R. § 1.36(b) is moot.

All future communications from the Office will continue to be directed to the below-listed address until otherwise notified by applicant.

Telephone inquires concerning this decision should be directed to Tredelle Jackson at 571-272-2783.

Tredelle D. Jackson
Petitions Examiner
Office of Petitions

cc: **BINGHAM MCCUTCHEN LLP**
THREE EMBARCADERO CENTER
SAN FRANCISCO CA 94111-4067

UNITED STATES PATENT AND TRADEMARK OFFICE

COMMISSIONER FOR PATENTS
UNITED STATES PATENT AND TRADEMARK OFFICE
WASHINGTON, D.C. 20231
www.uspto.gov

Paper No. 10

BLANK ROME COMISKY & MCCAULEY
900 17TH STREET, N.W., SUITE 1000
WASHINGTON, DC 20006

COPY MAILED

NOV 13 2002

OFFICE OF PETITIONS

ON PETITION

In re Application of :
Jeffrey Wayne Porter :
Application No. 09/570,772 :
Filed: May 11, 2000 :
Attorney Docket No. 114944-00103 :

This is a decision on the petition under 37 CFR 1.137(b), filed October 15, 2002, to revive the above-identified application.

The petition is **GRANTED**.

The above-identified application became abandoned for failure to reply in a timely manner to the non-final Office action mailed February 27, 2002, which set a shortened statutory period for reply of three (3) months. No extensions of time under the provisions of 37 CFR 1.136(a) were obtained. Accordingly, the above-identified application became abandoned on May 28, 2002.

Telephone inquiries concerning this decision should be directed to Wan Laymon at (703) 305-9282.

The application file is being forwarded to Technology Center AU 2876.

Wan Laymon
Petitions Examiner
Office of Petitions
Office of the Deputy Commissioner
for Patent Examination Policy

UNITED STATES PATENT AND TRADEMARK OFFICE

Commissioner for Patents
United States Patent and Trademark Office
Washington, D.C. 20231
www.uspto.gov

Paper No. 19

COPY MAILED

APR 2 3 2003

OFFICE OF PETITIONS

General Electric Company
Global Research Center
Patent Docket RM. 4A59
P. O. Box 8, Bldg. K-1 Ross
Niskayuna, NY 12309

In re Application of	:	
Daniel D. Harrison, et al.	:	
Application No. 09/570,835	:	ON PETITION
Filed: May 12, 2000	:	
Attorney Docket No. RD-25.842/USA	:	

This is in response to the petition under 37 CFR 1.47(a), filed November 4, 2002, which is being treated as a petition under 37 CFR 1.183 seeking waiver of the provisions of 37 CFR 1.67(a)(1) which states that a supplemental oath or declaration must be executed by all the named inventors.

The petition is **granted**.

MPEP § 603 provides that, "[w]hen an inventor who executed the original declaration is refusing or cannot be found to execute a required supplemental declaration, it is possible that the requirement may be suspended or waived in accordance with 37 CFR 1.183." Therefore, the submission of a petition under 37 CFR 1.47(a) is not the appropriate avenue of relief in this instance. Accordingly, the petition has been treated as a petition under 37 CFR 1.183 to waive the provisions of 37 CFR 1.67(a)(1) for a supplemental declaration executed by all the named inventors.

The Office action mailed August 26, 2002 stated that "a supplemental reissue oath/declaration under 37 CFR 1.175(b)(1) must be received before this reissue application can be allowed. For any error corrected, which is not covered by an oath or declaration, applicant MUST submit a supplemental oath or declaration prior to allowance."

In reply, the instant petition, along with a declaration executed by three of the four inventors, was submitted. The petition states that Mr. Anatha K. Pradeep cannot be located despite their efforts and evidence supporting such a statement has also been supplied.

Under the circumstances recounted in the instant petition, justice would be served by suspending the requirements of 37 CFR 1.67(a). Accordingly, the substitute declaration received November 4, 2002 and signed by three of the four named inventors is accepted as a proper oath under 37 CFR 1.67(a).

Any inquiries concerning this decision on petition may be directed to Marianne Morgan at (703) 306-3475. Any questions concerning the examination procedures or status of this application should be directed to Technology Center Art Unit 3661.

The application file does not indicate a change of address has been filed in this case, although the address given on the petition differs from the address of record. A change of address should be filed in this case in accordance with MPEP 601.03. A courtesy copy of this decision is being mailed to the address noted on the petition. However, until otherwise instructed, all future correspondence regarding this application will be mailed solely to the address of record.

The application file is being forwarded to Technology Center Art Unit 3661 for appropriate action on the reply submitted November 4, 2002.

Frances Hicks

Frances M. Hicks
Lead Petitions Examiner
Office of Petitions
Office of the Deputy Commissioner
for Patent Examination Policy

cc: Penny A. Clarke
General Electric Company
Building K1, Room 3A72
Schenectady, NY 12301

UNITED STATES PATENT AND TRADEMARK OFFICE

Commissioner for Patents
United States Patent and Trademark Office
P.O. Box 1450
Alexandria, VA 22313-1450
www.uspto.gov

Paper No. None

WOOD, HERRON & EVANS, L.L.P. (IBM)
2700 CAREW TOWER
441 VINE STREET
CINCINNATI OH 45202

COPY MAILED

MAR 27 2007

OFFICE OF PETITIONS

In re Application of
Cary Lee Bates et al.
Application No. 09/570,871
Filed: May 15, 2000
Attorney Docket No. RO999-231
Title: AUTOMATED GENERATION OF ALIASES BASED ON EMBEDDED ALIAS INFORMATION

DECISION ON PETITION
UNDER 37 C.F.R. §1.181

This is a decision on the petition filed on December 8, 2006, pursuant to 37 C.F.R. §1.181, requesting that the holding of abandonment in the above-identified application be withdrawn.

The above-identified application became abandoned for failure to reply in a timely manner to the non-final Office action, mailed May 18, 2006, which set a shortened statutory period for reply of three months. No response was received, and no extensions of time under the provisions of 37 C.F.R. §1.136(a) were requested. Accordingly, the above-identified application became abandoned on August 19, 2006. A notice of abandonment was mailed on November 28, 2006.

With the present petition, Petitioner has alleged that the mailing was not received. The showing required to establish nonreceipt of an Office communication must include a statement from the practitioner stating that the Office communication was not received by the practitioner and attesting to the fact that a search of the file jacket and docket records indicates that the Office communication was not received. In addition, a copy of the docket record where the non-received Office communication

would have been entered had it been received and docketed must be attached to and referenced in practitioner's statement[1].

Petitioner has met the requirements of Delgar v. Schuyler, 172 USPQ 513 (D.D.C. 1971), in that he has asserted that the Office communication was not received, that he has searched both the file jacket and the docket record, and he has included a copy of the latter.

Considering the facts and circumstances of the delay at issue, as set forth on petition, it is concluded that Petitioner has met his burden of establishing that the mailing was not received.

Accordingly, the petition under 37 C.F.R. §1.181(a) is **GRANTED**. The holding of abandonment is **WITHDRAWN**.

The Technology Center will be notified of this decision. The Technology Center's support staff will notify the Examiner of this decision, so that the amendment that was received with the present petition can be processed.

Telephone inquiries regarding this decision should be directed to the undersigned at (571) 272-3225[2]. All other inquiries concerning examination procedures or status of the application should be directed to the Technology Center.

Paul Shanoski

Paul Shanoski
Senior Attorney
Office of Petitions
United States Patent and Trademark Office

---

1 See MPEP 711.03(c).
2 Petitioner will note that all practice before the Office should be in writing, and the action of the Office will be based exclusively on the written record in the Office. See 37 C.F.R. §1.2. As such, Petitioner is reminded that no telephone discussion may be controlling or considered authority for Petitioner's further action(s).

UNITED STATES PATENT AND TRADEMARK OFFICE

Commissioner for Patents
United States Patent and Trademark Office
P.O. Box 1450
Alexandria, VA 22313-1450
www.uspto.gov

WOOCHOON W. PARK
LADAS & PARRY
224 SOUTH MICHIGAN AVE
CHICAGO, IL 60604

COPY MAILED

MAR 0 8 2006

OFFICE OF PETITIONS

In re Patent No. 6,965,568 :
Issue Date: November 15, 2005 :
Application No. 09/570,892 :
Filed: May 15, 2000 :
Attorney Docket No. CU-2199 :

ON PETITION

This is a decision on the petition filed January 17, 2005, which is being treated as a request under 37 CFR 3.81(b) to correct the name of the assignee on the front page of the above-identified patent by way of a Certificate of Correction.

The petition is **GRANTED**.

The request was accompanied by a certificate of correction (and fee) as required by 37 CFR 3.81(b) and the processing fee set forth in 37 CFR 1.17(i). Further, Office assignment records reflect that IWICS INC. is the assignee of record and that the assignment was submitted for recordation as set forth in 37 CFR 3.11 before issuance of the patent. Accordingly, as the request complies with the provisions of 37 CFR 3.81(b), it would be appropriate for a certificate of correction to be processed.

The patent file is being forwarded to the Certificates of Correction Branch for issuance of the requested Certificate of Correction.

Telephone inquiries concerning this decision may be directed to Denise Pothier at (571) 272-4787. Inquiries regarding the issuance of a certificate of correction should be directed to the Certificate of Correction Branch at (703) 305-8309.

Frances Hicks

Frances Hicks
Petitions Examiner
Office of Petitions

UNITED STATES PATENT AND TRADEMARK OFFICE

COMMISSIONER FOR PATENTS
UNITED STATES PATENT AND TRADEMARK OFFICE
P.O. BOX 1450
ALEXANDRIA, VA 22313-1450
www.uspto.gov

APR - 5 2004

HUMAN GENOME SCIENCES INC.
ATTN: MARK J. HYMAN
9410 KEY WEST AVENUE
ROCKVILLE, MD 20850

In re Application of	:	
Gentz et al.	:	
Serial No.: 09/571,013	:	WITHDRAWAL OF ABANDONMENT
Filing Date: May 15, 2000	:	
Attorney Docket No. PF111U3C1		

This letter is in response to the Petition under 37 CFR ¶ 1.181, filed August 19, 2003, to withdraw the notice of abandonment.

A review of the file history shows that the Office mailed a Notice of Abandonment on November 11, 2003. A letter rescinding the Notice of Abandonment was mailed March 3, 2004.

This Petition was filed August 19, 2003, but has only recently been matched to the file, the Office regrets the delay in response.

DECISION

The petition is **DISMISSED** in view of the letter mailed mailed November 8, 2003 rescinding the notice of abandonment.

Should there be any questions with regard to this letter, please contact Special Program Examiner Julie Burke by letter addressed to the Director, Technology Center 1600, PO Box 1450, Alexandria, VA 22313-1450 or by telephone at (571) 272-0512 or by facsimile transmission at (703) 872-9306.

J. Burke for

Jasemine Chambers
Director, Technology Center 1600

UNITED STATES PATENT AND TRADEMARK OFFICE

COMMISSIONER FOR PATENTS
UNITED STATES PATENT AND TRADEMARK OFFICE
WASHINGTON, D.C. 20231
www.uspto.gov

Paper No. 12

Keith R. Haupt
Wood, Herron & Evans
2700 Carew Tower
Cincinnati, OH 45202

COPY MAILED

AUG 1 4 2002

OFFICE OF PETITIONS

In re Application of	:	
Christopher M. Relyea, et al.	:	
Application No. 09/571,021	:	ON PETITION
Filed: May 15, 2000	:	
Attorney Docket No. N/A	:	

This is a decision on the petition under 37 CFR 1.137(b), filed June 19, 2002, to revive the above-identified application.

The petition is **GRANTED**.

The above-identified application became abandoned for failure to reply within the meaning of 37CFR 1.113 in a timely manner to the non-final Office action mailed October 4, 2000, which set a shortened statutory period for reply of three (3) months. A three(3) months extension of time under the provisions of 37 CFR 1.136(a) was obtained. Accordingly, the application became abandoned on April 5, 2001.

Telephone inquiries concerning this decision should be directed to Cheryl Gibson-Baylor at (703)308-5111, or in her absence, Sherry Brinkley at (703)305-9220.

The application file is being forwarded to Technology Center 3600, Art Unit 3636.

Cheryl Gibson-Baylor
Petitions Examiner
Office of Petitions
Office of the Deputy Commissioner
for Patent Examination Policy

Sherry Brinkley
Petitions Examiner

cc: Motorola, Inc.
Law Department
8000 West Sunrise Boulevard
Fort Lauderdale, FL 33322

UNITED STATES PATENT AND TRADEMARK OFFICE

UNITED STATES DEPARTMENT OF COMMERCE
United States Patent and Trademark Office
Address: COMMISSIONER FOR PATENTS
P.O. Box 1450
Alexandria, Virginia 22313-1450
www.uspto.gov

HICKMAN PALERMO TRUONG & BECKER/ORACLE
2055 GATEWAY PLACE
SUITE 550
SAN JOSE, CA 95110-1083

Mail Date: 04/23/2010

Applicant	: Eric Sedlar	: DECISION ON REQUEST FOR
Patent Number	: 7620620	: RECALCULATION of PATENT
Issue Date	: 11/17/2009	: TERM ADJUSTMENT IN VIEW
Appliction No	: 09/571,060	: OF WYETH
Filed	: 05/15/2000	:
		:

The Patentee's Request for Recalculation is **DISMISSED.**

This Request is deemed ineligible for consideration for one or more of the following reasons:

(A). The patent for which PTA recalculation is requested is either a design or reissue application or is a reexamination proceeding;

(B). The patent for which PTA recalculation is requested resulted from a utility or plant application filed under 35 USC 111(a) before May 29, 2000 and no CPA filed in the application on/after May 29, 2000;

(C). The patent for which PTA recalculation is requested resulted from an international application in which the international filing date was before May 29, 2000 and no CPA filed in the application on/after May 29, 2000;

(D). The patent for which PTA recalculation is requested issued on/after March 2, 2010;

(E). The Request for Recalculation was filed more than 180 days after the grant date of the patent and the request was not filed within two months of a dismissal of a request for reconsideration of the of the patent term under 37 CFR 1.705(d);

(F). The Request for Recalculation is not solely limited to USPTO pre-Wyeth interpretation of 35 U.S.C. 154(b)(2)(A);

or

(G). A civil action was filed pursuant to 35 U.S.C. 154(b)(4)(A)concerning the same patent at issue in this request.

Patentee may file a reply to this decision dismissing the Request for Recalculation. Patentee must file such reply within one month or thirty days, whichever is longer, of the mail date of the decision dismissing the Request for Recalculation. No fee is required if patentee is asserting in the reply that the dismissal for ineligibility is improper.

Patentee should use document code PET.OP if electronically filing a reply to this dismissal. If the USPTO finds that the request was improperly deemed ineligible, the USPTO will mail applicant a recalculation determination.

Patentee should be aware that in order to preserve the right to review in the United States District Court for the District of Columbia of the USPTO patent term adjustment determination, patentee must ensure that he or she also take the steps required under 35 U.S.C. 154(b)(4)(A). Nothing in the request for recalculation should be construed as providing an alternative time frame for commencing a civil action under 35 U.S.C. 154 (b)(4)(A).

Any questions concerning this decision should be directed to the Office of Patent Legal Administration at 571-272-7702.

UNITED STATES PATENT AND TRADEMARK OFFICE

Commissioner for Patents
United States Patent and Trademark Office
P.O. Box 1450
Alexandria, VA 22313-1450
www.uspto.gov

SCHWEGMAN, LUNDEBERG, WOESSNER & KLUTH, P.A.
P.O. BOX 2938
MINNEAPOLIS MN 55402

COPY MAILED

DEC 0 1 2006

OFFICE OF PETITIONS

In re Application of	:	
Minyu Li, et al.	:	
Application No. 09/571,121	:	DECISION ON PETITION
Filed: May 12, 2000	:	TO WITHDRAW
Attorney Docket No. 730.015US1	:	FROM RECORD
	:	

This is a decision on the Request to Withdraw as attorney or agent of record under 37 C.F.R. § 1.36(b) filed August 30, 2006.

The request is **DISMISSED** as moot.

A review of the file record indicates that the power of attorney to Schwegman, Lundeberg, Woessner & Kluth, P.A. has been revoked by the assignee of the patent application on October 27, 2006. Accordingly, the request to withdraw under 37 C.F.R. § 1.36(b) is moot.

All future communications from the Office will continue to be directed to the below-listed address until otherwise notified by applicant.

Telephone inquires concerning this decision should be directed to April Wise at 571-272-1642.

April M. Wise
Petitions Examiner
Office of Petitions

cc: KINNEY & LANG, P.A.
312 SOUTH THIRD STREET
MINNEAPOLIS, MN 55415

UNITED STATES PATENT AND TRADEMARK OFFICE

COMMISSIONER FOR PATENTS
UNITED STATES PATENT AND TRADEMARK OFFICE
P.O. BOX 1450
ALEXANDRIA, VA 22313-1450
www.uspto.gov

ECOLAB INC.
MAIL STOP ESC-F7, 655 LONE OAK DRIVE
EAGAN MN 55121

COPY MAILED

MAR 18 2008

OFFICE OF PETITIONS

In re Application of :
Li, et al. :
Application No. 09/571,121 : ON PETITION
Filed: May 12, 2000 :
Attorney Docket No. 1360US01 :

This is a decision on the petition under 37 CFR 1.137(a), filed October 24, 2007, to revive the above-identified application.

The petition is **GRANTED.**

The application became abandoned May 23, 2007 for failure to timely submit a proper reply to the non-final Office action mailed February 22, 2007. The non-final Office action set a three month shortened statutory period of time for reply. No petition for extension of time was received. Notice of Abandonment was mailed September 7, 2007.

The petition satisfies the requirements of 37 CFR 1.137(a) in that petitioner has supplied (1) the required reply in the form of a reply to the non-final Office action; (2) the required petition fee; and (3) a showing to the satisfaction of the Director that the entire delay was unavoidable. Specifically, the delay in timely responding to the non-final Office action was a consequence of the Office's failure to enter the change of correspondence address/power of attorney filed October 27, 2007.

This application is being referred to Group Art Unit 1772.

Telephone inquiries concerning this decision should be directed to the undersigned at (571) 272-3205.

Alesia M. Brown
Petitions Attorney
Office of Petitions

UNITED STATES PATENT AND TRADEMARK OFFICE

COMMISSIONER FOR PATENTS
UNITED STATES PATENT AND TRADEMARK OFFICE
P.O. BOX 1450
ALEXANDRIA, VA 22313-1450
www.uspto.gov

David W. Lynch
Crawford Maunu PLLC
1270 Northland Drive, Suite 390
Mendota Heights, MN 55120

COPY MAILED

FEB 07 2005

OFFICE OF PETITIONS

In re Application of	:	
Danielle K. Dittrich, et al.	:	
Application No. 09/571,181	:	ON PETITION
Filed: May 16, 2000	:	
Attorney Docket No. BLD9-2000-0013US1	:	

This is a decision on the petition under 37 CFR 1.137(b), filed December 2, 2004, to revive the above-identified application.

The petition is **GRANTED**.

37 CFR 1.137(b)(3) requires a statement that the entire delay in filing the required reply from the due date for the reply until the filing of a grantable petition pursuant to 37 CFR 1.137(b) was unintentional. Since the statement contained in the instant petition varies from the language required by 37 CFR 1.137(b)(3), the statement is being construed as the statement required by 37 CFR 1.137(b)(3) and petitioner must notify the Office if this is **not** a correct interpretation of the statement contained in the instant petition.

Telephone inquiries concerning this decision should be directed to the undersigned at (703) 306-3475.

The application file is being referred to Technology Center 2600 for processing the Request for Continued Examination under 37 CFR 1.114 filed with the instant petition.

Marianne E. Jenkins
Petitions Examiner
Office of Petitions
Office of the Deputy Commissioner
for Patent Examination Policy

UNITED STATES PATENT AND TRADEMARK OFFICE

Commissioner for Patents
United States Patent and Trademark Office
P.O. Box 1450
Alexandria, VA 22313-1450
www.uspto.gov
DIW Jul-05

LEYDIG, VOIT & MAYER, LTD.
TWO PRUDENTIAL PLAZA, SUITE 4900
180 NORTH STETSON AVENUE
CHICAGO IL 60601-6780

COPY MAILED

JUL 14 2005

OFFICE OF PETITIONS

In re Application of	:	
Wang et al.	:	
Application No. 09/571,313	:	ON PETITION
Filed: 16 May, 2000	:	
Atty Docket 2026-4209US2	:	

This is a decision on the paper filed on 19 May, 2005, which is treated as a petition under 37 CFR 1.182, to correct the spelling of the first named inventor's first name.

The petition is **GRANTED**.

The inventor's name has been corrected.

As a review of the declaration under 37 CFR 1.63 reveals that the inventor's name as listed thereon is correct. As such, the error necessitating the petition was that of the Office. As such, no fee is due.

Office PALM records have been corrected to reflect the correct invention title. A corrected Filing Receipt is attached.

The requested correction will be printed on the patent if this can be accomplished without substantial disruption to the issue process. However, if the printing of the patent has progressed to the point where the requested data cannot be included in the printed patent, petitioners can request a Certificate of Correction under 37 CFR 1.322.

The application file is being referred to the Publishing Division for processing into a patent.

Telephone inquiries concerning this matter may be directed to the undersigned at 571-272-3231.

Douglas I. Wood
Senior Petitions Attorney
Office of Petitions

cc: Corrected Filing Receipt

UNITED STATES PATENT AND TRADEMARK OFFICE

Commissioner for Patents
United States Patent and Trademark Office
P.O. Box 1450
Alexandria, VA 22313-1450
www.uspto.gov

James H. Wynn
Lord Bissell & Brook
300 Suth Grand Avenue
Los Angeles, CA 90071

COPY MAILED

APR 14 2008

OFFICE OF PETITIONS

In re Application of	:	
Tsutomu Kadotani et al.	:	
Application No. 09/571,321	:	DECISION ON PETITION
Filed: May 15, 2000	:	TO WITHFRAW
Attorney Docket No. 000628	:	FROM RECORD
	:	

This is a decision on the Request to Withdraw as attorney or agent of record under 37 CFR 1.136(b) filed June 2, 2006.

The request is **NOT APPROVED** because it is moot.

A review of the file record indicates that the power of attorney to James H. Wynn has been revoked by the assignee of the patent application on July 28, 2006. Accordingly, the request to withdraw under 37 CFR 1.136(b) is moot.

All future communications from the Office will continue to be directed to the below-listed address until otherwise notified by applicant.

Telephone inquiries concerning this decision should be directed to Carl Friedman at 571-272-6842.

David Bucci
Petitions Examiner
Office of Petitions

Cc: Keith D. Parr at Lord, Bissell & Brook LLP
111 South Wacker Drive
Chicago IL 60606

MAS

UNITED STATES PATENT AND TRADEMARK OFFICE

Commissioner for Patents
United States Patent and Trademark Office
P.O. Box 1450
Alexandria, VA 22313-1450
www.uspto.gov

VENABLE, BAETJER, HOWARD AND
CIVILETTI, LLP
P.O. BOX 34385
WASHINGTON DC 20043-9998

COPY MAILED

MAR 0 4 2005

OFFICE OF PETITIONS

ON PETITION

In re Application of
Shin Ishibashi et al
Application No. 09/571,334
Filed: May 15, 2000
Attorney Docket No. 31238-160444

This is a decision on the petition, filed March 3, 2005, under 37 CFR 1.313(c)(2) to withdraw the above-identified application from issue after payment of the issue fee.

The petition is **GRANTED.**

The above-identified application is withdrawn from issue for consideration of a submission under 37 CFR 1.114 (request for continued examination). See 37 CFR 1.313(c)(2).

Petitioner is advised that the issue fee paid on December 6, 2004 in the above-identified application cannot be refunded. If, however, the above-identified application is again allowed, petitioner may request that it be applied towards the issue fee required by the new Notice of Allowance.[1]

Telephone inquiries should be directed to the undersigned at (571) 272-3208.

The examiner of Technology Center AU 2874 will consider the request for continued examination under 37 CFR 1.114.

Karen Creasy

Karen Creasy
Petitions Examiner
Office of Petitions
Office of the Deputy Commissioner
for Patent Examination Policy

RECEIVED
MAR 7 2005
VENABLE IP DOCKETING DEPARTMENT

[1] The request to apply the issue fee to the new Notice may be satisfied by completing and returning the new Issue Fee Transmittal Form PTOL-85(b), which includes the following language thereon: "Commissioner for Patents is requested to apply the Issue Fee and Publication Fee (if any) or re-apply any previously paid issue fee to the application identified above." Petitioner is advised that, whether a fee is indicated as being due or not, the Issue Fee Transmittal Form must be completed and timely submitted to avoid abandonment. Note the language in bold text on the first page of the Notice of Allowance and Fee(s) Due (PTOL-85).

COMPUTER UPDATED

UNITED STATES PATENT AND TRADEMARK OFFICE

Commissioner for Patents
United States Patent and Trademark Office
P.O. Box 1450
Alexandria, VA 22313-1450
www.uspto.gov

Copy Only

VENABLE, BAETJER, HOWARD AND CIVILETTI, LLP
P.O. BOX 34385
WASHINGTON DC 20043-9998

COPY MAILED

MAR 0 4 2005

OFFICE OF PETITIONS

ON PETITION

In re Application of :
Shin Ishibashi et al :
Application No. 09/571,334 :
Filed: May 15, 2000 :
Attorney Docket No. 31238-160444 :

This is a decision on the petition, filed March 3, 2005, under 37 CFR 1.313(c)(2) to withdraw the above-identified application from issue after payment of the issue fee.

The petition is **GRANTED**.

The above-identified application is withdrawn from issue for consideration of a submission under 37 CFR 1.114 (request for continued examination). See 37 CFR 1.313(c)(2).

Petitioner is advised that the issue fee paid on December 6, 2004 in the above-identified application cannot be refunded. If, however, the above-identified application is again allowed, petitioner may request that it be applied towards the issue fee required by the new Notice of Allowance.[1]

Telephone inquiries should be directed to the undersigned at (571) 272-3208.

The examiner of Technology Center AU 2874 will consider the request for continued examination under 37 CFR 1.114.

Karen Creasy

Karen Creasy
Petitions Examiner
Office of Petitions
Office of the Deputy Commissioner
for Patent Examination Policy

---

[1] The request to apply the issue fee to the new Notice may be satisfied by completing and returning the new Issue Fee Transmittal Form PTOL-85(b), which includes the following language thereon: "Commissioner for Patents is requested to apply the Issue Fee and Publication Fee (if any) or re-apply any previously paid issue fee to the application identified above." Petitioner is advised that, whether a fee is indicated as being due or not, the Issue Fee Transmittal Form **must** be completed and timely submitted to avoid abandonment. Note the language in bold text on the first page of the Notice of Allowance and Fee(s) Due (PTOL-85).

UNITED STATES PATENT AND TRADEMARK OFFICE

MAS

Commissioner for Patents
United States Patent and Trademark Office
P.O. Box 1450
Alexandria, VA 22313-1450
www.uspto.gov

OIPE IAP42
SEP 19 2007
PATENT & TRADEMARK OFFICE

VENABLE, BAETJER, HOWARD AND
CIVILETTI, LLP
P.O. BOX 34385
WASHINGTON DC 20043-9998

COPY MAILED

MAR 04 2005

OFFICE OF PETITIONS

ON PETITION

In re Application of :
Shin Ishibashi et al :
Application No. 09/571,334 :
Filed: May 15, 2000 :
Attorney Docket No. 31238-160444 :

This is a decision on the petition, filed March 3, 2005, under 37 CFR 1.313(c)(2) to withdraw the above-identified application from issue after payment of the issue fee.

The petition is **GRANTED.**

The above-identified application is withdrawn from issue for consideration of a submission under 37 CFR 1.114 (request for continued examination). See 37 CFR 1.313(c)(2).

Petitioner is advised that the issue fee paid on December 6, 2004 in the above-identified application cannot be refunded. If, however, the above-identified application is again allowed, petitioner may request that it be applied towards the issue fee required by the new Notice of Allowance.[1]

Telephone inquiries should be directed to the undersigned at (571) 272-3208.

The examiner of Technology Center AU 2874 will consider the request for continued examination under 37 CFR 1.114.

Karen Creasy

Karen Creasy
Petitions Examiner
Office of Petitions
Office of the Deputy Commissioner
for Patent Examination Policy

RECEIVED
MAR 7 - 2005
VENABLE IP DOCKETING DEPARTMENT

[1] The request to apply the issue fee to the new Notice may be satisfied by completing and returning the new Issue Fee Transmittal Form PTOL-85(b), which includes the following language thereon: "Commissioner for Patents is requested to apply the Issue Fee and Publication Fee (if any) or re-apply any previously paid issue fee to the application identified above." Petitioner is advised that, whether a fee is indicated as being due or not, the Issue Fee Transmittal Form **must** be completed and timely submitted to avoid abandonment. Note the language in bold text on the first page of the Notice of Allowance and Fee(s) Due (PTOL-85).

COMPUTER ENTERED

UNITED STATES PATENT AND TRADEMARK OFFICE

Commissioner for Patents
United States Patent and Trademark Office
P.O. Box 1450
Alexandria, VA 22313-1450
www.uspto.gov

GERALD L. FELLOWS
MICHAEL BEST & FRIEDRICH LLP
100 EAST WISCONSIN AVENUE
MILWAUKEE, WI 53202

COPY MAILED

MAR 3 0 2005

OFFICE OF PETITIONS

In re Patent No. 6,786,070 :
Issue Date: September 7, 2004 :
Application No. 09/571,340 :
Filed: May 16, 2000 :
Attorney Docket No. 8780-9010-00 :

ON PETITION

This is a decision on the petition filed December 14, 2004, which is being treated under 37 CFR 1.181, to correct the assignee data on the front page of the above-identified patent.

The petition is granted.

In view of the Office error, no petition fee is necessary.

The file is being forwarded to the Certificates of Correction Branch for issuance of a Certificate of Correction.

Telephone inquiries concerning this matter may be directed to the undersigned at (571) 272-3208.

Karen Creasy

Karen Creasy
Petitions Examiner
Office of Petitions
Office of the Deputy Commissioner
for Patent Examination Policy

UNITED STATES PATENT AND TRADEMARK OFFICE

COMMISSIONER FOR PATEN
UNITED STATES PATENT AND TRADEMARK OFFI
WASHINGTON, D.C. 2023
www.uspto.g

MAILED

JUN 2 3 2003

Technology Center 2100

Paper No. 8

George O. Saile & Associates
28 Davis Avenue
Poughkeepsie, New York 12603

In re Application of: Meng-Fan Chang	)	DECISION ON PETITION
Application No. 09/571,373	)	UNDER 37 C.F.R. § 1.8 TO
Filed: May 15, 2000	)	ACCEPT PAPERS AS TIMELY
For: SKEW-FREE CONTROL OF A	)	FILED AND TO WITHDRAW
MULTI-BLOCK SRAM	)	HOLDING OF ABANDONMENT

This is a decision on the petition filed May 23, 2003 under 37 C.F.R. § 1.181 requesting the Withdrawal of the Holding of Abandonment of the above identified application. The communication is treated as a petition under 37 C.F.R. § 1.8(b) to accept papers as timely filed and as a petition under 37 C.F.R. § 1.181 requesting the Withdrawal of the Holding of Abandonment.(See MPEP § 711.03(c)).

The petition is **DISMISSED**.

This application was held abandoned for failure to respond in a timely manner to the Office Action mailed June 19, 2002 A Notice of Abandonment was mailed March 21, 2003.

37 C.F.R. § 1.8(b) states:

> (b) In the event that correspondence is considered timely filed by being mailed or transmitted in accordance with paragraph (a) of this section, but not received in the Patent and Trademark Office, and the application is held to be abandoned or the proceeding dismissed, terminated, or decided with prejudice, the correspondence will be considered timely if the party who forwarded such correspondence:
>
> (1) Informs the Office of the previous mailing or transmission of the correspondence promptly after becoming aware that the Office has no evidence of receipt of the correspondence,
>
> (2) Supplies an additional copy of the previously mailed or transmitted correspondence and certificate, and
>
> (3) Includes a statement which attests on a personal knowledge basis or to the satisfaction of the Commissioner to the previous timely mailing or transmission. If the correspondence was sent by facsimile transmission, a copy of the sending unit's report confirming transmission may be used to support this statement.

In the instant case, the petition does not comply with the requirements set forth in 37 C.F.R. § 1.8(b)(2) and §1.8(b)(3). The petition does not attest to the transmission of the Response on a ***personal knowledge*** basis. In addition, although the petition indicates that the dated amendment was attached, no such amendment was found.

The petition is **DISMISSED**. The application file is being forwarded to the Files Repository.

If the petitioner desires further review of this Decision, Applicant should consider filing a Request for Reconsideration within 2 months of the mailing date of this Decision.

Applicant should consider filing a petition under 37 CFR 1.137 (accompanied by the appropriate petition fee) to revive the abandoned application.

Inquiries related to this decision should be directed to Pinchus M. Laufer at 703-306-4160.

Pinchus M. Laufer

Pinchus M. Laufer
Special Programs Examiner
Technology Center 2100
Computer Architecture, Software, and Information Security
(703) 306-4160

UNITED STATES PATENT AND TRADEMARK OFFICE

Commissioner for Patents
United States Patent and Trademark Office
P.O. Box 1450
Alexandria, VA 22313-1450
www.uspto.gov

Paper 14

DUANE MORRIS, LLP
IP DEPARTMENT
30 SOUTH 17TH STREET
PHILADELPHIA PA 19103-4196

COPY MAILED

NOV 16 2006

OFFICE OF PETITIONS

In re Application of
Meng-Fan Chang
Application No. 09/571,373
Filed: May 15, 2000
Attorney Docket No. TSMC99-363

ON PETITION

This is a decision on the "Request for Reconsideration of Petition under 37 CFR 1.137(b), filed August 27, 2003, which is treated as a petition under 37 CFR 1.181 to withdraw the holding of abandonment for the above-identified application.[1]

The petition to withdraw the holding of abandonment is **GRANTED**.

The application was held abandoned on September 20, 2002 for failure to file a timely response to the Final Office Action mailed June 19, 2002, which set a three (3) month shortened period for reply. No extensions of time in accordance with 37 CFR 1.136(a) were obtained. Accordingly, a Notice of Abandonment was mailed March 21, 2003.

Petitioner asserts that a proper response, was filed on August 19, 2002. In support, petitioner submits a copy of the reply said to have been filed, which includes a certificate of mailing pursuant to 37 CFR 1.8 and a statement from the Attorney of Record that to the best of his knowledge, the amendment had been mailed.

The evidence submitted corroborates a timely response to the Final Office Action. Accordingly, the holding of abandonment is withdrawn and the Notice of Abandonment is vacated. No petition fee Is due and none has been charged.

This matter is being referred to Technology Center 2186 for appropriate action on the amendment filed August 19, 2002, a copy of which was submitted August 27, 2003 with the instant petition.

Telephone inquiries concerning this matter should be directed to the undersigned Petitions Attorney at (571) 272-3212.

Patricia Faison-Ball

Patricia Faison-Ball
Senior Petitions Attorney
Office of Petitions

---

[1]While petitioners requested a withdrawal of the holding of abandonment, petitioners improperly titled the petition under 37 CFR 1.137(b).

UNITED STATES PATENT AND TRADEMARK OFFICE

Commissioner for Patents
United States Patent and Trademark Office
P.O. Box 1450
Alexandria, VA 22313-1450
www.uspto.gov

COPY MAILED

AUG 29 2007

OFFICE OF PETITIONS

DUANE MORRIS, LLP
IP DEPARTMENT
30 SOUTH 17TH STREET
PHILADELPHIA, PA 19103-4196

In re Application of	:	
Meng-Fan CHANG	:	
Application No. 09/571,373	:	DECISION ON PETITION
Filed: May 15, 2000	:	
Attorney Docket No. TSMC99-363	:	

This is a decision on the petition under the unintentional provisions of 37 CFR 1.137(b), filed February 22, 2007, to revive the above-identified application.

The petition is **GRANTED**.

The application became abandoned for failure to timely file a reply within the meaning of 37 CFR 1.113 to the final Office action of June 19, 2002. The proposed reply required for consideration of a petition to revive must be a Notice of Appeal (and appeal fee required by 37 CFR 41.20(b)(2), an amendment that *prima facie* places the application in condition for allowance, a Request for Continued Examination and submission (37 CFR 1.114), or the filing of a continuing application under 37 CFR 1.53(b). See MPEP 711.03(c)(III)(A)(2). No extensions of time pursuant to the provisions of 37 CFR 1.136(a) were obtained. Accordingly, the date of abandonment of this application is September 20, 2002.

The petition satisfies the requirements of 37 CFR 1.137(b) in that petitioner has supplied (1) the reply in the form of a Request for Continued Examination (RCE) and fee of $790, and the submission required by 37 CFR 1.114; (2) the petition fee of $1,500; and (3) a proper statement of unintentional delay. Accordingly, the reply to the final Office Action of June 19, 2002 is accepted as having been unintentionally delayed.

Telephone inquiries concerning this decision should be directed to Michelle R. Eason at (571) 272-4231.

This application is being referred to Technology Center AU 2186 for processing of the RCE and for appropriate action by the Examiner in the normal course of business on the amendment submitted in accordance with 37 CFR 1.114.

Francis Ducho for

David A. Bucci
Petitions Examiner
Office of Petitions

UNITED STATES PATENT AND TRADEMARK OFFICE

COMMISSIONER FOR PATENTS
UNITED STATES PATENT AND TRADEMARK OFFICE
P.O. BOX 1450
ALEXANDRIA, VA 22313-1450
www.uspto.gov

Paper No. 29

Wilson Sonsini Goodrich & Rosati
650 Page Mill Road
Palo Alto, CA 94304-1050

COPY MAILED

MAY 1 4 2004

OFFICE OF PETITIONS

In re Application of	:	
John Ellenby, et al.	:	
Application No. 09/571,394	:	ON PETITION
Filed: May 15, 2000	:	
Attorney Docket No. 7952-712	:	

This is a decision on the petition under 37 CFR 1.137(b), filed via certificate of mailing on March 31, 2004, to revive the above-identified application.

The petition is **GRANTED**.

Telephone inquiries concerning this decision should be directed to the undersigned at (703) 306-3475.

The application file is being forwarded to Technology Center 2600 for processing the Request for Continued Examination under 37 CFR 1.114 filed with the instant petition.

Marianne E. Morgan
Petitions Examiner
Office of Petitions
Office of the Deputy Commissioner
for Patent Examination Policy

UNITED STATES PATENT AND TRADEMARK OFFICE

Commissioner for Patents
United States Patent and Trademark Office
P.O. Box 1450
Alexandria, VA 22313-1450
www.uspto.gov

MORGAN LEWIS & BOCKIUS LLP
1111 PENNSYLVANIA AVENUE NW
WASHINGTON DC 20004

COPY MAILED
OCT 0 4 2006
OFFICE OF PETITIONS

In re Application of	:	
Ellenby et al.	:	DECISION ON
Application No.: 09/571,394	:	
Filing Date: May 15, 2000	:	PETITION UNDER
Docket No.: 7952-712	:	
For: Electro-Optic Vision Systems	:	37 CFR 1.137(b)

This is a decision on Petition Under 37 CFR 1.137(b), filed on August 17, 2006.

The petition is **GRANTED**.

The above-identified application became abandoned for failure to submit the issue fee in a timely manner, in reply to the Notice of Allowance mailed March 21, 2006, which set a statutory period for reply of three (3) months. Accordingly, the above-identified application became abandoned at midnight on June 21, 2006. A Notice of Abandonment was mailed on August 3, 2006.

Petitioner has met the requirements for revival under 37 CFR 1.137(b). Petitioner has submitted the reply in the form of the Issue Fee and Publication Fee (if required), paid the petition fee and made the required statement of unintentional delay. No Terminal Disclaimer is required since this application was filed after June 8, 1995. Accordingly, the Issue Fee payment is accepted as having been unintentionally delayed.

This application is being referred to the Publishing Division.

George Dombroske
PCT Legal Examiner
Office of PCT Legal Administration
on behalf of
Office of Petitions

Telephone: 571-272-3283
Facsimile: 571-273-0459

UNITED STATES PATENT AND TRADEMARK OFFICE

UNDER SECRETARY OF COMMERCE FOR INTELLECTUAL PROPERTY AND
DIRECTOR OF THE UNITED STATES PATENT AND TRADEMARK OFFICE
WASHINGTON, D.C. 20231
www.uspto.gov

FEB 12 2003
RECEIVED
REHRIG PACIFIC COMPANY

FEB 19 2003

Paper No. 18

In re Application of
Gerald R. Koefelda *et al*
Application No. 09/571,425
Filed: May 15, 2000
Attorney Docket No. RPC 0493 PUS

DECISION ON PETITION

Due: 3-12-03

This is a decision on the petition filed on January 21, 2003 by which petitioners request supervisory review of the examiner's action regarding the appeal brief and examiner's answer in this application. The petition is considered pursuant to 37 CFR 1.181, and no fee is required. A refund of the $130.00 petition fee tendered with the petition will be credited to Deposit Account No. 50-1984.

The petition is granted.

Appellants' brief on appeal was timely filed on October 25, 2002. The examiner felt that the appeal brief did not adequately address the matter of which claims on appeal stood together and which did not as required by 37 CFR 37 CFR 1.192(c)(7 and 8) and as discussed at MPEP § 1206. The examiner then promulgated an examiner's answer in which it is declared that all of the appealed claims "stand or fall together."

A review of the appeal brief shows that there is some ambiguity if the "Grouping of Claims" section on page 3 of the appeal brief is read literally and without reference to the arguments presented later in the appeal brief. However, it was improper for the examiner to take the action that he did. As discussed in MPEP § 1206, 37 CFR 1.192(d) states, *inter alia*,

> "If a brief is filed which does not comply with all the requirements of paragraph (c) of this section, appellant will be notified of the reasons for non-compliance and provide with a period of one month with which to file an amended brief." (Emphasis supplied.)

Given that the appeal brief is, at worst, ambiguous on the matter of claims standing or falling together, the examiner should have prepared form PTOL-462, "Notification of Non-Compliance With 37 CFR 1.192(c)", explaining the deficiency and offering appellant the one month period of time to correct the problem.

Accordingly, the examiner's answer dated November 14, 2002, paper No. 15, is hereby VACATED. Therefore, the reply brief attached to the instant petition will not be entered. Petitioners are given a period of ONE MONTH or THIRTY DAYS from the mailing date of this Decision, whichever is longer, in which to file a corrected appeal brief in triplicate. This period may be extended pursuant to 37 CFR 1.136. Failure to timely file the corrected appeal brief in triplicate will result in dismissal of the appeal. After the corrected appeal brief is filed, the examiner will treat this application as special and prepare an examiner's answer addressing the corrected appeal brief, or take such other action as may be appropriate.

The application is being forwarded to the Supervisory Patent Examiner of Art Unit 3727 who should see that the above mentioned refund is made.

PETITION GRANTED.

E. Rollins-Cross, Director, Patent
Examining Groups 3710 and 3720

BROOKS & KUSHMAN
1000 TOWN CENTER 22ND FL
SOUTHFIELD, MI 48075

Exhibit B

UNITED STATES PATENT AND TRADEMARK OFFICE

FEB 12 2003

UNDER SECRETARY OF COMMERCE FOR INTELLECTUAL PROPERTY AND
DIRECTOR OF THE UNITED STATES PATENT AND TRADEMARK OFFICE
WASHINGTON, D.C. 20231
www.uspto.gov

Paper No. 18

In re Application of
Gerald R. Koefelda *et al*
Application No. 09/571,425
Filed: May 15, 2000
Attorney Docket No. RPC 0493 PUS

: DECISION ON PETITION

This is a decision on the petition filed on January 21, 2003 by which petitioners request supervisory review of the examiner's action regarding the appeal brief and examiner's answer in this application. The petition is considered pursuant to 37 CFR 1.181, and no fee is required. A refund of the $130.00 petition fee tendered with the petition will be credited to Deposit Account No. 50-1984.

The petition is granted.

Appellants' brief on appeal was timely filed on October 25, 2002. The examiner felt that the appeal brief did not adequately address the matter of which claims on appeal stood together and which did not as required by 37 CFR 37 CFR 1.192(c)(7 and 8) and as discussed at MPEP § 1206. The examiner then promulgated an examiner's answer in which it is declared that all of the appealed claims "stand or fall together."

A review of the appeal brief shows that there is some ambiguity if the "Grouping of Claims" section on page 3 of the appeal brief is read literally and without reference to the arguments presented later in the appeal brief. However, it was improper for the examiner to take the action that he did. As discussed in MPEP § 1206, 37 CFR 1.192(d) states, *inter alia,*

> "If a brief is filed which does not comply with all the requirements of paragraph (c) of this section, appellant **will** be notified of the reasons for non-compliance and provide with a period of one month with which to file an amended brief." (Emphasis supplied.)

Given that the appeal brief is, at worst, ambiguous on the matter of claims standing or falling together, the examiner should have prepared form PTOL-462, "Notification of Non-Compliance With 37 CFR 1.192(c)", explaining the deficiency and offering appellant the one month period of time to correct the problem.

Accordingly, the examiner's answer dated November 14, 2002, paper No. 15, is hereby VACATED. Therefore, the reply brief attached to the instant petition will not be entered. Petitioners are given a period of ONE MONTH or THIRTY DAYS from the mailing date of this Decision, whichever is longer, in which to file a corrected appeal brief in triplicate. This period may be extended pursuant to 37 CFR 1.136. Failure to timely file the corrected appeal brief in triplicate will result in dismissal of the appeal. After the corrected appeal brief is filed, the examiner will treat this application as special and prepare an examiner's answer addressing the corrected appeal brief, or take such other action as may be appropriate.

The application is being forwarded to the Supervisory Patent Examiner of Art Unit 3727 who should see that the above mentioned refund is made.

PETITION GRANTED.

E. Rollins-Cross, Director, Patent
Examining Groups 3710 and 3720

BROOKS & KUSHMAN
1000 TOWN CENTER 22ND FL
SOUTHFIELD, MI 48075

UNITED STATES PATENT AND TRADEMARK OFFICE

Commissioner for Patents
United States Patent and Trademark Office
P.O. Box 1450
Alexandria, VA 22313-1450
www.uspto.gov

HICKMAN PALERMO TRUONG & BECKER, LLP
2055 GATEWAY PLACE
SUITE 550
SAN JOSE, CA 95110

COPY MAILED

JAN 2 5 2006

OFFICE OF PETITIONS

In re Application of Sedlar :
Application No. 09/571,508 : Decision on Petition
Filing Date: May 15, 2000 :
Attorney Docket No. 50277-0299 :

This is a decision in response to the petition filed under 37 CFR 1.183 on September 14, 2005.

The petition is **dismissed**.

Facts:

Applicant filed a Notice of Appeal on March 10, 2003.

An appeal brief was filed on May 6, 2003.

A supplemental appeal brief was filed on June 16, 2003.

An IDS was filed on July 7, 2003.

On September 4, 2003, the examiner mailed an Examiner's Answer. The examiner also notified petitioner the July 7, 2003 IDS had been entered into the file and considered.

Petitioner filed a reply brief on October 14, 2003.

On January 5, 2004, the examiner notified petitioner the reply brief had been considered and the file would be forwarded to the Board of Patent Appeals and Interferences for a decision on the appeal.

Petitioner filed an IDS on February 20, 2004.

On March 23, 2004, the BPAI properly remanded the application to the examiner to consider the February 20, 2004 IDS.

On April 8, 2004, the examiner notified petitioner the February 20, 2004 IDS had been considered.

On May 14, 2004, petitioner filed a new IDS.

On September 2, 2004, a paper was filed listing related applications.

On January 6, 2005, the examiner notified petitioner the May 14, 2004 IDS had been considered. The examiner made no reference to the September 2, 2004 paper at that time.

On August 30, 2005, the examiner notified petitioner the September 2, 2004 paper had been considered. The examiner referred to the paper as an IDS and stated the requirements of 37 CFR 1.97 had been met.

The instant petition was filed on September 14, 2005.

Discussion of Remand Procedures at the USPTO:

When an applicant files an IDS after an application has been sent to the BPAI, the application is remanded to the examiner.

After consideration of an IDS, the examiner notifies the applicant and BPAI the IDS has been considered. For files electronically scanned into Image File Wrappers, such as the instant application, the examiner sends a message within the IFW program to "BPAI.Inbox" alerting the board to the fact the IDS has been considered. Upon receipt of the message, the application is thereafter docketed as an appeal with the BPAI unless the examiner has reopened prosecution.

Analysis:

Petitioner requests two forms of relief:

(1) the application be returned to the BPAI and docketed for appeal, and
(2) the application be considered by the BPAI even if applicants file an IDS at a time the application is before the Board of Appeals.

As to (1), a petition is unnecessary. The examiner has considered each IDS filed. The next step to be taken is for the examiner to notify the BPAI that each IDS has been considered and hte application should be docketed as an appeal with the BPAI. A petition under 37 CFR 1.183 is unnecessary to have the examiner take such action.

As to (2), the Office hesitates to grant a waiver on any possible future conduct of applicants. The next IDS could list only single reference with the reference only having a minimal chance of being material to the patentability of the subject matter in the application. In the alternative, the next IDS may list a very large number of references with the references having a very high chance of being material to the patentability of the subject matter in the application. The Office will not render a decision on facts not currently before the Office.

If an IDS is filed in the future along with a petition requesting the IDS not result in a remand, the BPAI, not the Office of Petitions, will have jurisdiction over the petition. 37 CFR 41.35 permits

the BPAI to relinquish jurisdiction to the examiner or to remand a matter to the examiner.[1] 37 CFR 41.3 states the BPAI has jurisdiction over petitions related to 37 CFR 41.35.[2]

37 CFR 41.3 states:

> ... This section covers petitions on matters pending before the Board (§§ 41.35, 41.64, 41.103, and 41.205); otherwise, see §§ 1.181 to 1.183 of this title....
>
> Petition fee. The fee set in § 41.20(a) must accompany any petition under this section except no fee is required for a petition under this section seeking supervisory review....
>
> Except as otherwise provided in this part or as the Board may authorize in writing, a party may:
>
> (i) File the petition within 14 days from the date of the action from which the party is requesting relief, and
>
> (ii) File any request for reconsideration of a petition decision within 14 days of the decision on petition or such other time as the Board may set.

Conclusion:

The examiner will be notified of this decision so that the examiner can notify the BPAI that each IDS which has been filed has been considered and the application is ready for docketing as an appeal.

Telephone inquiries regarding this communication should be directed to Petitions Attorney Steven Brantley at (571) 272-3203.

Charles Steven Brantley
Senior Petitions Attorney
Office of Petitions

---

[1] See Rules of Practice Before the Board of Patent Appeals and Interferences, 69 Fed. Reg. 49959 (Aug. 12, 2004).

[2] See Rules of Practice Before the Board of Patent Appeals and Interferences, 69 Fed. Reg. 49959 (Aug. 12, 2004).

SPE RESPONSE FOR CERTIFICATE OF CORRECTION

Paper No.: X

DATE : **September 14,2007**

TO SPE OF : ART UNIT **1763**

SUBJECT : Request for Certificate of Correction for Appl. No.: **09/571,523** Patent No.: **6461976 B1**

A response is requested with respect to a request for a certificate of correction.

With respect to the change(s) requested to correct Office and/or Applicant's errors, should the patent read as shown in the certificate of correction attached herewith or the COCIN document(s), in IFW images for the above-identified patented application? No new matter should be introduced, nor should the scope or meaning of the claims be changed.

[redacted]

DO NOT SENT TO ATTORNEY

If the response is for a paper file wrapper, please complete the response and forward the response with the paper file wrapper, to the employee (named below), within 7 days, to:

Certificates of Correction Branch (CofC)
South Tower - 9A22
Palm Location 7580

LAMONTE NEWSOME
Certificates of Correction Branch
703-308-9390 ext. 112

Thank You For Your Assistance

The request for issuing the above-identified correction(s) is hereby:
Note your decision on the appropriate box.

☒ **Approved**	**All** changes apply.
☐ **Approved In Part**	Specify below which changes **do not** apply.
☐ **Denied**	State the reasons for denial below.

Comments: Copies of references by Muller et al. Prince and Truesdale et al which were originally listed on Form PTO-1449 of May16, 2000 were submitted by the applicant on 2/2/01. Examiner considered these referenced in the office action of 7/18/01; however, the examiner inadvertently failed to list all the references on the Form PTO-892 of 7/18/01. Therefore, the request for certificate of correction is approved.

pl

PARVIZ HASSANZADEH
SUPERVISORY PATENT EXAMINER
SPE

1763
Art Unit

PTOL-306 (REV. 7/03)

UNITED STATES PATENT AND TRADEMARK OFFICE

Commissioner for Patents
United States Patent and Trademark Office
P.O. Box 1450
Alexandria, VA 22313-1450
www.uspto.gov

HEIMBECHER & ASSOCIATES
390 UNION BLVD., SUITE 650
LAKEWOOD, CO 80228-6512

COPY MAILED

OCT 12 2005

OFFICE OF PETITIONS

In re Application of	:	
Frank C. Christofferson et al	:	
Application No. 09/571,577	:	ON PETITION
Filed: May 15, 2000	:	
Attorney Docket No. 4939.02	:	

This is a decision on the petition under 37 CFR 1.313(c)(2), filed October 3, 2005, to withdraw the above-identified application from issue after payment of the issue fee.

The petition is **GRANTED**.

The above-identified application is withdrawn from issue for consideration of a submission under 37 CFR 1.114 (request for continued examination). See 37 CFR 1.313(c)(2).

Petitioner is advised that the issue fee paid on August 4, 2005 in the above-identified application cannot be refunded. If, however, the above-identified application is again allowed, petitioner may request that it be applied towards the issue fee required by the new Notice of Allowance. [1]

The correspondence filed October 3, 2005 is not signed by an attorney of record. However, in accordance with 37 CFR 1.34(a), the signature of John P. Schaub appearing on the correspondence shall constitute a representation to the United States Patent and Trademark Office that he is authorized to represent the particular party in whose behalf he acts. However, if Mr. Schaub desires to receive correspondence regarding this file, the appropriate power of attorney documentation must be submitted. A courtesy copy of this decision is being mailed to Mr. Schaub, the petitioner herein. However, until otherwise instructed, all future correspondence regarding this application file will be directed solely to the above-noted correspondence address of record.

---

[1] The request to apply the issue fee to the new Notice may be satisfied by completing and returning the new Issue Fee Transmittal Form PTOL-85(b), which includes the following language thereon: "Commissioner for Patents is requested to apply the Issue Fee and Publication Fee (if any) or re-apply any previously paid issue fee to the application identified above." Petitioner is advised that, whether a fee is indicated as being due or not, the Issue Fee Transmittal Form **must** be completed and timely submitted to avoid abandonment. Note the language in bold text on the first page of the Notice of Allowance and Fee(s) Due (PTOL-85).

Telephone inquiries should be directed to Wan Laymon at (571) 272-3220.

This matter is being referred to Technology Center AU 2642 for processing of the request for continued examination under 37 CFR 1.114.

Wan Laymon
Wan Laymon
Petitions Examiner
Office of Petitions

cc: THELEN REID & PRIEST
P.O. BOX 640640
SAN JOSE, CA 95164-0640

UNITED STATES PATENT AND TRADEMARK OFFICE

Commissioner for Patents
United States Patent and Trademark Office
P.O. Box 1450
Alexandria, VA 22313-1450
www.uspto.gov

MAY 10 2005

#17

Wood Phillips Vansanten Clark & Mortimer
500 W Madison Street
Suite 3800
Chicago, IL 60661

In re Application of
Nobutaka Osako et al
Application No. 09/571,640
Filed: May 15, 2000
For: POWER TRANSMISSION BELT AND METHOD OF MANUFACTURING THE POWER TRANSMISSION BELT

DECISION ON PETITION TO WITHDRAW THE HOLDING OF ABANDONMENT

This is a decision on applicants' Petition to Withdraw the Holding of Abandonment under 37 CFR 1.181, filed in the United States Patent and Trademark Office on May 18, 2004.

The petition is **DENIED**.

A review of the file record reveals that on April 3, 2003 an examiner's amendment/Notice of Allowability and Notice of Allowance were mailed to applicants. Applicants filed a Request for Continued Examination (RCE) on July 3, 2003. However, the RCE was improper and a notice to that effect was sent to applicants on August 29, 2003. With no issue fee having been paid the application was properly abandoned on April 8, 2004.

Applicants argue that the RCE was proper. Applicants assert that the letter submitted with the RCE and indicating that certified copies of the priority documents will be submitted at a later date constitutes a proper submission in accordance with 37 CFR 114(c).

A proper submission as defined in 37 CFR 1.114(c) includes but is not limited to an information disclosure statement, an amendment, new arguments or new evidence in support of patentability. The letter indicating the future submission of priority documents is asserted by applicants as falling within this definition. 37 CFR 1.114(d) states in part that "...the submission will be entered and considered ..." [emphasis added]. To be "considered" by the examiner infers that some action would be taken by the examiner in response to the submission. If the letter submitted by applicants were considered to be a proper submission the examiner would be expected to provide a response thereto. However, the examiner when faced with how to respond to the "submission' provided,

by applicants, could not respond in any meaningful way since there is nothing in the letter warranting a response by the examiner. The examiner could not respond to a possible future act. In this specific case, a proper submission would have been the actual submission of the priority documents. The letter which accompanied the RCE was correctly treated as not being a proper submission within the meaning of 37 CFR 1.114(c) and as a result the RCE itself was correctly held to be improper. Thus, there is no Office error and the application is properly abandoned.

Applicants may wish to consider filing a petition to revive under 37 CFR 1.137(a) (unavoidable delay) or 37 CFR 1.137(b) (unintentional delay) as discussed below.

I. Unavoidable Delay

> A grantable petition to revive an abandoned application under 37 CFR 1.137(a) must be accompanied by: (1) the required reply (unless previously filed), which may be met by the filing of a continuing application in a nonprovisional application abandoned for failure to prosecute; (2) the petition fee required by 37 CFR 1.17(l); and (3) an adequate showing to the satisfaction of the Commissioner that the entire delay in filing the required reply from the due date for the reply until the filing of a grantable petition pursuant to 37 CFR 1.137(a) was unavoidable.

The showing requirement can be met by submission of statements of fact establishing that the delay in filing the reply was unavoidable. This includes a satisfactory showing that the cause of the delay resulting in failure to reply in a timely fashion to the Office action was unavoidable. Diligence during the time period between abandonment and filing of the petition to revive must also be shown.

As an alternative to filing a petition for unavoidable abandonment, a petition for revival of an application abandoned unintentionally under 37 CFR 1.137(b) might be appropriate.

II. Unintentional Delay

> A grantable petition to revive an abandoned application under 37 CFR 1.137(b) must be accompanied by: (1) the required reply (unless previously filed), which may be met by the filing of a continuing application in a nonprovisional application abandoned for failure to prosecute; (2) the petition fee required by 37 CFR 1.17(m); and (3) a statement that the entire delay in filing the required reply from the due date for the reply until the filing of a grantable petition pursuant to 37 CFR 1.137(b) was unintentional.

The petition fee required by law for filing a petition under unavoidable standard is $500. The fee for a petition under the unintentional standard is $1,500. If applicants have, or can qualify as a "small entity" and do so prior to or together with the payment of the fee, the fee will be one-half of the amount indicated.

If not previously filed, the reply to the outstanding Office action must accompany the petition to revive. The required items should be promptly submitted under a cover letter entitled "Petition to Revive."

Further correspondence with respect to a petition to revive should be addressed as follows:

By mail:	Mail Stop PETITION Commissioner for Patents Post Office Box 1450 Alexandria, VA 22313-1450
By hand:	Customer Service Window Randolph Building 401 Dulany St. Alexandria, VA 22314
By FAX:	(703) 872-9306 ATTN: Office of Petitions

Telephone inquiries should be directed to the Office of Petitions Staff at (571) 272-3282.

Randolph A. Reese

Randolph A. Reese
Special Programs Examiner
Technology Center 3600
(571) 272-6619

RAR/jwk: 5/9/05

UNITED STATES PATENT AND TRADEMARK OFFICE

Commissioner for Patents
United States Patent and Trademark Office
P.O. Box 1450
Alexandria, VA 22313-1450
www.uspto.gov

WOOD PHILLIPS VANSANTEN CLARK &
MORTIMER
500 W MADISON STREET
SUITE 3800
CHICAGO IL 60661

COPY MAILED

AUG 29 2005

OFFICE OF PETITIONS

In re Application of	:
Richard Phillips et al	:
Application No. 09/571,640	: DECISION GRANTING PETITION
Filed: May 15, 2000	: UNDER 37 CFR 1.137(b)
Attorney Docket No. 00650P0223OUS	:

This is a decision on the petition under 37 CFR 1.137(b), filed June 15, 2005, to revive the above-identified application.

The petition is **GRANTED**.

The petition satisfies the conditions for revival pursuant to the provisions of 37 CFR 1.137(b) in that (1) the reply (2) the petition fee; and (3) the required statement of unintentional delay have been received. Accordingly, the reply is accepted as having been unintentionally delayed.

Telephone inquiries concerning this decision should be directed to the undersigned at (571) 272-3208.

The application file is being forwarded to Technology Center AU 3682 to consider the Request for Continued Examination under 37 CFR 1.114.

Karen Creasy

Karen Creasy
Petitions Examiner
Office of Petitions
Office of the Deputy Commissioner
for Patent Examination Policy

UNITED STATES PATENT AND TRADEMARK OFFICE

UNITED STATES DEPARTMENT OF COMMERCE
United States Patent and Trademark Office
Address: COMMISSIONER FOR PATENTS
P.O. Box 1450
Alexandria, Virginia 22313-1450
www.uspto.gov

HAMILTON & TERRILE, LLP
P.O. BOX 203518
AUSTIN, TX 78720

Mail Date: 04/22/2010

Applicant	: Gunter Leeb	: DECISION ON REQUEST FOR
Patent Number	: 7653583	: RECALCULATION of PATENT
Issue Date	: 01/26/2010	: TERM ADJUSTMENT IN VIEW
Appliction No	: 09/571,799	: OF WYETH
Filed	: 05/16/2000	:
		:

The Patentee's Request for Recalculation is **DISMISSED.**

This Request is deemed ineligible for consideration for one or more of the following reasons:

(A). The patent for which PTA recalculation is requested is either a design or reissue application or is a reexamination proceeding;

(B). The patent for which PTA recalculation is requested resulted from a utility or plant application filed under 35 USC 111(a) before May 29, 2000 and no CPA filed in the application on/after May 29, 2000;

(C). The patent for which PTA recalculation is requested resulted from an international application in which the international filing date was before May 29, 2000 and no CPA filed in the application on/after May 29, 2000;

(D). The patent for which PTA recalculation is requested issued on/after March 2, 2010;

(E). The Request for Recalculation was filed more than 180 days after the grant date of the patent and the request was not filed within two months of a dismissal of a request for reconsideration of the of the patent term under 37 CFR 1.705(d);

(F). The Request for Recalculation is not solely limited to USPTO pre-Wyeth interpretation of 35 U.S.C. 154(b)(2)(A);

or

(G). A civil action was filed pursuant to 35 U.S.C. 154(b)(4)(A)concerning the same patent at issue in this request.

Patentee may file a reply to this decision dismissing the Request for Recalculation. Patentee must file such reply within one month or thirty days, whichever is longer, of the mail date of the decision dismissing the Request for Recalculation. No fee is required if patentee is asserting in the reply that the dismissal for ineligibility is improper.

Patentee should use document code PET.OP if electronically filing a reply to this dismissal. If the USPTO finds that the request was improperly deemed ineligible, the USPTO will mail applicant a recalculation determination.

Patentee should be aware that in order to preserve the right to review in the United States District Court for the District of Columbia of the USPTO patent term adjustment determination, patentee must ensure that he or she also take the steps required under 35 U.S.C. 154(b)(4)(A). Nothing in the request for recalculation should be construed as providing an alternative time frame for commencing a civil action under 35 U.S.C. 154 (b)(4)(A).

Any questions concerning this decision should be directed to the Office of Patent Legal Administration at 571-272-7702.

UNITED STATES PATENT AND TRADEMARK OFFICE

COMMISSIONER FOR PATENTS
UNITED STATES PATENT AND TRADEMARK OFFICE
P.O. BOX 1450
ALEXANDRIA, VA 22313-1450
www.uspto.gov

MAR 10 2005

MAILED

MAR 10 2005

OFFICE OF THE DIRECTOR
TC 3600

Daffer McDaneil LLP
P.O. Box 684908
Austin, TX 78768

In re Application of
Artur P. Balasinski
Application No. 09/571,826
Filed: May 16, 2002
For: SCHEME FOR EVALUATING COSTS AND/OR BENEFITS OF MANUFACTURING TECHNOLOGIES

DECISION ON PETITION TO WITHDRAW THE HOLDING OF ABANDONMENT

This is in response to the Petition to Withdraw the Holding of Abandonment filed in the United States Patent and Trademark Office on October 12, 2004.

The petition is **GRANTED** in view of the following evidence of timely filing:

☐ Postcard receipt dated_____.

☐ USPTO return facsimile receipt dated _____.

☐ Certificate of Mailing/Transmission signed on _____. and supported by a statement under 37 C.F.R. 1.8(b)(3).

☐ Hand Delivery Receipt of the specific documents submitted dated _____.

☐ Certificate of Transmission of CPA under 37 C.F.R. 1.6 filed on _____.

☐ Express Mail Receipt under 37 C.F.R. 1.10 dated _____.

☒ Originally sent response, filed April 16, 2004, with a Certificate of Mailing dated April 13, 2004, has been found in the application file.

This application is being forwarded to the Supervisory Legal Instruments Examiner for withdrawal of the abandonment and then to the examiner for prompt action.

KJD/rwg: 2/02/05

KENNETH J. DORNER
SPECIAL PROGRAMS EXAMINER
TECHNOLOGY CENTER 3600

UNITED STATES PATENT AND TRADEMARK OFFICE

Commissioner for Patents
United States Patent and Trademark Office
P.O. Box 1450
Alexandria, VA 22313-1450
www.uspto.gov

Paper No.

Paul E. Kudirka, Esq.
KUDIRKA & JOBSE, LLP
One State Street, Suite 800
Boston, MA 02109

MAILED

JUL 2 8 2005

Technology Center 2100

In re Application of:
Walter E. Tuvell and Nimisha Asthagiri
Application No. 09/571,851
Filed: May 12, 2000
For: METHOD AND APPARATUS FOR MANAGING SECURE COLLABORATIVE TRANSACTIONS

DECISION ON REQUEST TO WITHDRAW AS ATTORNEY OR AGENT

This is a decision on the Request To Withdraw from Representation filed June 23, 2005.

A grantable request to withdraw as attorney of record should indicate thereon the present mailing addresses of the attorney(s) who is/are withdrawing from the record and of the applicant. The request for withdrawal must be signed by every attorney seeking to withdraw or contain a clear indication that one attorney is signing on behalf of another/others. A request to withdraw will not be approved unless at least 30 (thirty) days would remain between the date of approval and the later of the expiration date of a time to file a response or the expiration date of the maximum time period which can be extended under 37 C.F.R. ∋ 1. 136(a). The effective date of withdrawal being the date of decision and not the date of request. See M.P.E.P. ∋ 402.06. 37 C.F.R. ∋ 1.36 further requires that the applicant or patent owner be notified of the withdrawal of the attorney or agent.

The request filed June 23, 2005 meets all the requirements. Accordingly the request is **GRANTED**.

All future communications from the Office will be directed to the below-listed address until otherwise notified by applicant. This correspondence address is provided by the withdrawn attorney(s). Applicant is reminded of the obligation to promptly notify the Patent and Trademark Office (Office) of any change in correspondence address to ensure receipt of all communications from the Office.

James R. Matthews

for Vincent N. Trans
Special Program Examiner
Technology Center 2100
Computer Architecture, Software, and
Information Security
(571) 272-3613

cc: Kymerie Schmidt
MICROSOFT CORPORATION
One Microsoft Way
Redmond, WA 98052-6399

UNITED STATES PATENT AND TRADEMARK OFFICE

COMMISSIONER FOR PATENTS
UNITED STATES PATENT AND TRADEMARK OFFICE
P.O. BOX 1450
ALEXANDRIA, VA 22313-1450
www.uspto.gov

Scott C. Harris
FISH & RICHARDSON, P.C.
12390 El Camino Real
San Diego, CA 92130-2081

MAILED

MAY 3 1 2005

Technology Center 2100

In re Application of: Green, et al. Application No. 09/571,876 Filed: May 11, 2000 For: COLOR MONITORING AND ANALYSIS FOR COLOR VISION DEFICIENT INDIVIDUALS	**DECISION ON PETITION UNDER 37 C.F.R. § 1.84(a)(2) TO ACCEPT COLOR DRAWINGS**

This is a decision on the petition under 37 C.F.R. § 1.84(a)(2), filed April 23, 2004, requesting acceptance of color drawings.

The petition requests that the color drawings, be accepted in lieu of black and white drawings.

The Petition is **DISMISSED**.

A grantable petition under 37 C.F.R. § 1.84(a)(2) must be accompanied by a fee set forth under 37 C.F.R. § 1.17(h), 3 (three) sets of the color drawings in question, and the specification must contain, or be amended to contain, the following language as the first paragraph in that portion of the specification relating to the brief description of the drawings:

"The patent or application file contains at least one drawing executed in color. Copies of this patent ***or patent application publication*** *with color drawing(s) will be provided by the Patent and Trademark Office upon request and payment of the necessary fee."*

The petition was filed with no fee paid.

The petition is **DISMISSED**.

Petitioner is given one opportunity to perfect the petition. Any request for reconsideration must be filed within TWO MONTHS of the mail date of this decision.

Brian L. Johnson
~~Supervisory~~ Special Patent Examiner
Technology Center 2100
Computer Architecture, Software and Information Security
571-272-3935

UNITED STATES PATENT AND TRADEMARK OFFICE

COMMISSIONER FOR PATENTS
UNITED STATES PATENT AND TRADEMARK OFFICE
P.O. BOX 1450
ALEXANDRIA, VA 22313-1450
www.uspto.gov

Scott C. Harris
Fish & Richardson, PC
12390 El Camino Real
San Diego, CA 92130-2081

MAILED

NOV 0 8 2005

TECHNOLOGY CENTER 2100

In re Application of: Green, et al. Application No. 09/571,876 Filed: May 11, 2000 For: COLOR MONITORING AND ANALYSIS FOR COLOR VISION DEFICIENT INDIVIDUALS	)	**DECISION ON PETITION UNDER 37 C.F.R. § 1.84(a)(2) TO ACCEPT COLOR DRAWINGS**

This is a decision on the Request for Reconsideration of a petition under 37 C.F.R. § 1.84(a)(2), filed August 1, 2005, requesting acceptance of color drawings. The original petition, filed April 23, 2004 (copy filed May 17, 2004) was dismissed in a decision mailed May 31, 2005.

The petition requests that the color drawings, although not specifically identified, be accepted in lieu of black and white drawings.

A grantable petition under 37 C.F.R. § 1.84(a)(2) must be accompanied by a fee set forth under 37 C.F.R. § 1.17(h), three (3) sets of the color drawings in question, a black and white photocopy of said drawings, and the specification must contain, or be amended to contain, the following language as the first paragraph in that portion of the specification relating to the brief description of the drawings:

*"The patent or application file contains at least one drawing executed in color. Copies of this patent (**or patent application publication**) with color drawing(s) will be provided by the Patent and Trademark Office upon request and payment of the necessary fee."*

The petition was filed with the required fee and 3 (three) sets of color drawings. The specification at page 2, lines 9-12 did contain the required notification described above.

The petition is **GRANTED**.

The application is being forwarded to the Office of Patent Publications to complete issue processing.

Brian L. Johnson
Special Programs Examiner
Technology Center 2100
Computer Architecture, Software and Information Security
(571) 272-3595

UNITED STATES PATENT AND TRADEMARK OFFICE

COMMISSIONER FOR PATENTS
UNITED STATES PATENT AND TRADEMARK OFFICE
P.O. BOX 1450
ALEXANDRIA, VA 22313-1450
www.uspto.gov

Scott Harris
Fish & Richardson, PC
12390 El Camino Real
San Diego, CA 92130-2081

MAILED

NOV 08 2005

TECHNOLOGY CENTER 2100

In re Application of: Green, et al.
Application No. 09/571,876
Filed: May 11, 2000
For: COLOR MONITORING AND ANALYSIS FOR COLOR VISION DEFICIENT INDIVIDUALS

DECISION ON PETITION UNDER 37 C.F.R. § 1.84(a)(2) TO ACCEPT COLOR DRAWINGS

This is a decision on the Request for Reconsideration of a petition under 37 C.F.R. § 1.84(a)(2), filed August 1, 2005, requesting acceptance of color drawings. The original petition, filed April 23, 2004 (copy filed May 17, 2004) was dismissed in a decision mailed May 31, 2005.

The petition requests that the color drawings, although not specifically identified, be accepted in lieu of black and white drawings.

A grantable petition under 37 C.F.R. § 1.84(a)(2) must be accompanied by a fee set forth under 37 C.F.R. § 1.17(h), three (3) sets of the color drawings in question, a black and white photocopy of said drawings, and the specification must contain, or be amended to contain, the following language as the first paragraph in that portion of the specification relating to the brief description of the drawings:

*"The patent or application file contains at least one drawing executed in color. Copies of this patent (**or patent application publication**) with color drawing(s) will be provided by the Patent and Trademark Office upon request and payment of the necessary fee."*

The petition was filed with the required fee and 3 (three) sets of color drawings. The specification at page 2, lines 9-12 did contain the required notification described above.

The petition is **GRANTED**.

The application is being forwarded to the Office of Patent Publications to complete issue processing.

Brian L. Johnson
Special Programs Examiner
Technology Center 2100
Computer Architecture, Software and Information Security

UNITED STATES PATENT AND TRADEMARK OFFICE

Commissioner for Patents
United States Patent and Trademark Office
P.O. Box 1450
Alexandria, VA 22313-1450
www.uspto.gov

In re Patent No. 6382815
Issue Date: May 7,2002
Application No. 09571986
Filed: May 16,2000
Attorney Docket No. 22435-P001US

:
:DECISION GRANTING PETITION
:UNDER 37 CFR 1.378(c)
:

This is a decision on the electronic petition, filed July 9,2010 ,under 37 CFR 1.378(c) to accept the unintentionally delayed payment of the 7.5 year maintenance fee for the above-identified patent.

The petition is **GRANTED**.

The maintenance fee is accepted, and the above-identified patent reinstated as of July 9,2010 .
This decision also constitutes notice that the fee has been accepted. An electronic copy of the petition and this decision has been created as an entry in the Image File Wrapper. Nevertheless, petitioner should print and retain an independent copy.

Telephone inquiries related to this electronic decision should be directed to the Electronic Business Center at 1-866-217-9197.

PTO/SB/66 (03-09)
Approved for use through 03/31/2012. OMB 0651-0016
U.S. Patent and Trademark Office: U.S. DEPARTMENT OF COMMERCE
Under the Paperwork Reduction Act of 1995, no persons are required to respond to a collection of information unless it displays valid OMB control number.

PETITION TO ACCEPT UNINTENTIONALLY DELAYED PAYMENT OF MAINTENANCE FEE IN AN EXPIRED PATENT (37 CFR 1.378(c))

Patent Number	Issue Date (YYYY-MM-DD)	Application Number	Filing Date (YYYY-MM-DD)	Docket Number (if applicable)
6382815	2002-05-07	09571986	2000-05-16	6104-00201

CAUTION: Maintenance fee (and surcharge, if any) payment must correctly identify: (1) the patent number and (2) the application number of the actual U.S. application leading to issuance of that patent to ensure the fee(s) is/are associated with the correct patent. 37 CFR 1.366(c) and (d).

SMALL ENTITY
☒ Patentee claims, or has previously claimed, small entity status. See 37 CFR 1.27.

LOSS OF ENTITLEMENT TO SMALL ENTITY STATUS
☐ Patentee is no longer entitled to small entity status. See 37 CFR 1.27(g)

NOT Small Entity		Small Entity	
Fee	Code	Fee	Code
○ 3 ½ year	(1551)	○ 3 ½ year	(2551)
○ 7 ½ year	(1552)	◉ 7 ½ year	(2552)
○ 11 ½ year	(1553)	○ 11 ½ year	(2553)

SURCHARGE
The surcharge required by 37 CFR 1.20(i)(2) (Fee Code 1558) must be paid as a condition of accepting unintentionally delayed payment of the maintenance fee.

MAINTENANCE FEE (37 CFR 1.20(e)-(g))
The appropriate maintenance fee must be submitted with this petition.

STATEMENT
THE UNDERSIGNED CERTIFIES THAT THE DELAY IN PAYMENT OF THE MAINTENANCE FEE TO THIS PATENT WAS UNINTENTIONAL

PETITIONER(S) REQUEST THAT THE DELAYED PAYMENT OF THE MAINTENANCE FEE BE ACCEPTED AND THE PATENT REINSTATED

THIS PORTION MUST BE COMPLETED BY THE SIGNATORY OR SIGNATORIES

37 CFR 1.378(d) states: "Any petition under this section must be signed by an attorney or agent registered to practice before the Patent and Trademark Office, or by the patentee, the assignee, or other party in interest."

I certify, in accordance with 37 CFR 1.4(d)(4) that I am

◉ An attorney or agent registered to practice before the Patent and Trademark Office

○ A sole patentee

○ A joint patentee; I certify that I am authorized to sign this submission on behalf of all the other patentees.

○ A joint patentee; all of whom are signing this e-petition

○ The assignee of record of the entire interest

Patent Practitioner			
A signature of the applicant or representative is required in accordance with 37 CFR 1.33 and 10.18. Please see 37 CFR 1.4(d) for the form of the signature			
Signature	/Eric B. Meyertons/	Date (YYYY-MM-DD)	2010-07-08
Name	Eric B. Meyertons	Registration Number	34876

This collection of information is required by 37 CFR 1.378(c). The information is required to obtain or retain a benefit by the public which is to file (and by the USPTO to process) an application. Confidentiality is governed by 35 U.S.C. 122 and 37 CFR 1.11 and 1.14. This collection is estimated to take 1 hour to complete, including gathering, preparing, and submitting the completed application form to the USPTO. Time will vary depending upon the individual case. Any comments on the amount of time you require to complete this form and/ or suggestions for reducing this burden, should be sent to the Chief Information Officer, U.S. Patent and Trademark Office, U.S. Department of Commerce, P.O. Box 1450, Alexandria, VA 22313-1450. DO NOT SEND FEES OR COMPLETED FORMS TO THIS ADDRESS. **This form can only be used when in conjunction with EFS-Web. If this form is mailed to the USPTO, it may cause delays in reinstating the patent.**

Privacy Act Statement

The Privacy Act of 1974 (P.L. 93-579) requires that you be given certain information in connection with your submission of the attached form related to a patent application or patent. Accordingly, pursuant to the requirements of the Act, please be advised that: (1) the general authority for the collection of this information is 35 U.S.C. 2(b)(2); (2) furnishing of the information solicited is voluntary; and (3) the principal purpose for which the information is used by the U.S. Patent and Trademark Office is to process and/or examine your submission related to a patent application or patent. If you do not furnish the requested information, the U.S. Patent and Trademark Office may not be able to process and/or examine your submission, which may result in termination of proceedings or abandonment of the application or expiration of the patent.

The information provided by you in this form will be subject to the following routine uses:

1. The information on this form will be treated confidentially to the extent allowed under the Freedom of Information Act (5 U.S.C. 552) and the Privacy Act (5 U.S.C. 552a). Records from this system of records may be disclosed to the Department of Justice to determine whether the Freedom of Information Act requires disclosure of these records.

2. A record from this system of records may be disclosed, as a routine use, in the course of presenting evidence to a court, magistrate, or administrative tribunal, including disclosures to opposing counsel in the course of settlement negotiations.

3. A record in this system of records may be disclosed, as a routine use, to a Member of Congress submitting a request involving an individual, to whom the record pertains, when the individual has requested assistance from the Member with respect to the subject matter of the record.

4. A record in this system of records may be disclosed, as a routine use, to a contractor of the Agency having need for the information in order to perform a contract. Recipients of information shall be required to comply with the requirements of the Privacy Act of 1974, as amended, pursuant to 5 U.S.C. 552a(m).

5. A record related to an International Application filed under the Patent Cooperation Treaty in this system of records may be disclosed, as a routine use, to the International Bureau of the World Intellectual Property Organization, pursuant to the Patent Cooperation Treaty.

6. A record in this system of records may be disclosed, as a routine use, to another federal agency for purposes of National Security review (35 U.S.C. 181) and for review pursuant to the Atomic Energy Act (42 U.S.C. 218(c)).

7. A record from this system of records may be disclosed, as a routine use, to the Administrator, General Services, or his/her designee, during an inspection of records conducted by GSA as part of that agency's responsibility to recommend improvements in records management practices and programs, under authority of 44 U.S.C. 2904 and 2906. Such disclosure shall be made in accordance with the GSA regulations governing inspection of records for this purpose, and any other relevant (i.e., GSA or Commerce) directive. Such disclosure shall not be used to make determinations about individuals.

8. A record from this system of records may be disclosed, as a routine use, to the public after either publication of the application pursuant to 35 U.S.C. 122(b) or issuance of a patent pursuant to 35 U.S.C. 151. Further, a record may be disclosed, subject to the limitations of 37 CFR 1.14, as a routine use, to the public if the record was filed in an application which became abandoned or in which the proceedings were terminated and which application is referenced by either a published application, an application open to public inspections or an issued patent.

9. A record from this system of records may be disclosed, as a routine use, to a Federal, State, or local law enforcement agency, if the USPTO becomes aware of a violation or potential violation of law or regulation.

UNITED STATES PATENT AND TRADEMARK OFFICE

UNITED STATES DEPARTMENT OF COMMERCE
United States Patent and Trademark Office
Address: COMMISSIONER FOR PATENTS
P.O. Box 1450
Alexandria, Virginia 22313-1450
www.uspto.gov

March 24, 2004

Michael A. Slavin
McHale & Slavin
2855 PGA Blvd.
Palm Beach Gardens, FL 33140

In re application of
Gary Garcia DECISION ON PETITION
Serial No.: 09/572,012
Filed: May 16, 2000
For: MOBILE RECYCLE BIN

This is a decision on the petitions received by fax on February 11, 2004, to withdraw the holding of abandonment in the above-identified application.

The above-identified application became abandoned for failure to reply within the meaning of 37 C.F.R. 1.113 in timely manner to the Notice to File Missing Parts of Application mailed October 3, 2000. Which set a shortened statutory period for reply of two (2) months. Accordingly, this application became abandoned December 5, 2000. The notice of abandonment was mailed July 9, 2001.

On February 11, 2004, the office received a communication from the attorney of record. Enclosed was an acknowledgement that the attorney responded to the Notice to File Missing Parts on November 30, 2000.

The evidence submitted is sufficient to establish that the petitioners responded to the Notice to File Missing Parts on November 30, 2000.

The petition is hereby GRANTED.

The application will be completed with the documents received on February 11, 2004.

The office regrets any inconvenience this may have caused the client.

Telephone inquiries concerning this matter may be directed to Doshie E. Day at (703) 308-3640.

Doshie Day

Doshie E. Day
Program Management Assistant
Office Initial Patent Examination

UNITED STATES PATENT AND TRADEMARK OFFICE

Commissioner for Patents
United States Patent and Trademark Office
P.O. Box 1450
Alexandria, VA 22313-1450
www.uspto.gov

CAMPBELL STEPHENSON ASCOLESE, LLP
4907 SPICEWOOD SPRINGS ROAD
BUILDING 4, SUITE 201
AUSTIN, TX 78759

COPY MAILED
APR 25 2006
OFFICE OF PETITIONS

In re Application of :
Shmuel Shaffer et al. :
Application No. 09/572,199 : ON PETITION
Filed: May 17, 2000 :
Attorney Docket No.: M-8116US :

This is a decision on the petition filed February 13, 2006, under 37 CFR 1.181 to withdraw the holding of abandonment for the above-identified application.

The petition under 37 CFR 1.181 is **GRANTED**.

The application was held abandoned on November 28, 2005, for failure to timely submit the issue fee, as required by the Notice of Allowance and Issue Fee Due mailed on August 25, 2005. A three (3) month period for reply was set. Accordingly, a Notice of Abandonment was mailed on January 30, 2006.

Petitioner asserts that the issue fee transmittal and an authorization to charge the issue were mailed November 1, 2005 and received by the USPTO on November 3, 2005, before the due date.

In support, petitioner has submitted, *inter alia*, a copy of the issue fee transmittal form with the certificate of mail dated November 1, 2005 and a post card receipt date stamped November 3, 2005 by the USPTO. For payment of the issue fee, the copy of the issue fee transmittal form provided authorized the issue fee to be charged to Deposit Account No. 50-2306.

A search of the application file and the USPTO records reveals that in fact, the Issue Fee Transmittal and authorization to charge petitioner's deposit account are of record, timely received. In view thereof, the Notice of Abandonment was erroneously mailed.

Accordingly, the Notice of Abandonment mailed on January 30, 2006 is hereby withdrawn. No petition fee is necessary and none has been charged.

This matter will be referred to the Publishing Division to be processed into a patent.

Telephone inquiries concerning this matter may be directed to the undersigned Petitions Attorney at (571) 272-3212.

Patricia Faison-Ball

Patricia Faison-Ball
Senior Petitions Attorney
Office of Petitions

UNITED STATES PATENT AND TRADEMARK OFFICE

COMMISSIONER FOR PATENTS
UNITED STATES PATENT AND TRADEMARK OFFICE
WASHINGTON, D.C. 20231
WWW.USPTO.GOV

JJG: 05-02

Paper No: 18

COPY MAILED

MAY 0 9 2002

OFFICE OF PETITIONS

BROMBERG & SUNSTEIN LLP
125 SUMMER STREET
BOSTON MA 02110-1618

In re Application of:
Gilcher, et al.
Filed: 17 May, 2000
Application No. 09/572,357
Attorney Docket No. 1611/179

DECISION ON PETITION

This is a decision on the petition filed herein on 1 February, 2002, under 37 C.F.R. §1.137(b)[1] (as to unintentional delay) to revive the above-identified application.

The petition is **GRANTED**.[2]

The record indicates that:

- the instant application went abandoned when Petitioner failed to respond to the Notice of Allowance and Issue Fee Due mailed on 24 September, 2001, and due under a non-extendable deadline on or before 24 December, 2001;
- the Application went abandoned after midnight 24 December, 2001;
- it appears that no Notice of Abandonment was mailed in this matter;
- the instant petition (with fee) was filed on 1 February, 2002, with payment of the Issue Fee and fees for copies.

This application is being forwarded to Publications Branch to be processed into a patent.

---

[1] Effective December 1, 1997, the provisions of 37 C.F.R. §1.137(b) now provide that where the delay in reply was unintentional, a petition may be filed to revive an abandoned application or a lapsed patent pursuant to 37 C.F.R. §1.137(b). a grantable petition filed under the provisions of 37 C.F.R. §1.137(b) must be accompanied by:
(1) the required reply, unless previously filed. In a nonprovisional application abandoned for failure to prosecute, the required reply may be met by the filing of a continuing application. In an application or patent, abandoned or lapsed for failure to pay the issue fee or any portion thereof, the required reply must be the payment of the issue fee or any outstanding balance thereof.
(2) the petition fee as set forth in 37 C.F.R. §1.17(m);
(3) a statement that the entire delay in filing the required reply from the due date for the reply until the filing of a grantable petition pursuant to 37 C.F.R. §1.137(b) was unintentional. The Commissioner may require additional information where there is a question whether the delay was unintentional; and
(4) any terminal disclaimer (and fee set forth in 37 C.F.R. §1.20(d)) required pursuant to 37 C.F.R. §1.137(c). (Emphasis supplied.)

[2] The petition fee, Issue Fee and fee for copies previously has been paid.

Telephone inquiries concerning this decision may be directed to the undersigned, Office of Petitions, at (703) 305-9199.

John J. Gillon, Jr.
Senior Attorney
Office of Petitions
Office of the Deputy Commissioner
for Patent Examination Policy

UNITED STATES PATENT AND TRADEMARK OFFICE

Commissioner for Patents
United States Patent and Trademark Office
Washington, D.C. 20231
www.uspto.gov

Paper No. 14

STERNE KESSLER GOLDSTEIN & FOX PLLC
1100 NEW YORK AVENUE, NW
SUITE 600
WASHINGTON, DC 20005-3934

COPY MAILED

AUG 3 2001

OFFICE OF PETITIONS
A/C PATENTS

In re Application of
Zagury, Rappaport and Carcagno
Application No. 09/572,451
Filed: May 17, 2000
For: ANTI-RETROVIRAL IMMUNOGENS, PREPARATION AND USE

DECISION GRANTING PETITION UNDER 37 CFR 1.47(a)

This is in response to the petition under 37 CFR 1.47(a), filed December 22, 2000. The application file was recently forwarded to the Office of Petitions for review of the petition. The Office sincerely apologizes for the delay.

The petition is **granted**.

Petitioner has shown that the non-signing inventors have refused to join in the filing of the above-identified application after having been presented with the application papers. Specifically, the declaration of facts of Jorge A. Goldstein, Esquire established that the inventors were mailed the application papers, including the specification, claims and drawings, but failed to respond to the request that they sign the declaration.

The above-identified application and papers have been reviewed and found in compliance with 37 CFR 1.47(a). This application is hereby accorded Rule 1.47(a) status.

As provided in Rule 1.47(c), this Office will forward notice of this application's filing to the non-signing inventors at the addresses given in the present petition. Notice of the filing of this application will also be published in the Official Gazette.

The application file is being forwarded to the Office of Initial Patent Examination for further processing.

Telephone inquiries regarding this decision should be directed to the undersigned at (703) 306-5589.

Christina T. Tartera

Christina T. Tartera
Petitions Attorney
Office of Petitions
Office of the Deputy Commissioner
for Patent Examination Policy

UNITED STATES PATENT AND TRADEMARK OFFICE

Commissioner for Patents
United States Patent and Trademark Office
Washington, D.C. 20231
www.uspto.gov

Jay Rappaport
10 East Lodges Lane
Balacynwyd, PA 19004

COPY MAILED

AUG 3 2001

OFFICE OF PETITIONS
A/C PATENTS

In re Application of
Zagury, Rappaport and Carcagno
Application No. 09/572,451
Filed: May 17, 2000
For: ANTI-RETROVIRAL
IMMUNOGENS, PREPARATION AND
USE

LETTER

Dear Dr. Rappaport:

You are named as a joint inventor in the above-identified United States patent application filed under the provisions of 35 U.S.C. 116 (United States Code) and 37 CFR 1.47(a), Rules of Practice in Patent Cases. Should a patent be granted on the application you will be designated therein as a joint inventor.

As a named inventor you are entitled to inspect any paper in the file wrapper of the application, order copies of all or any part thereof (at a prepaid cost per 37 CFR 1.19) or make your position of record in the application. Alternatively, you may arrange to do any of the preceding through a registered patent attorney or agent presenting written authorization from you. If you care to join the application, counsel of record (see below) would presumably assist you. Joining in the application would entail the filing of an appropriate oath or declaration by you pursuant to 37 CFR 1.63.

Telephone inquiries regarding this communication should be directed to Petitions Attorney Christina T. Tartera at (703) 306-5589. Requests for information regarding your application should be directed to the File Information Unit at (703) 308-2733. Information regarding how to pay for and order a copy of the application, or a specific paper in the application, should be directed to Certification Division at (703) 308-9726 or 1-800-972-6382 (outside the Washington D.C. area).

Christina T. Tartera

Christina T. Tartera
Petitions Attorney
Office of Petitions
Office of the Deputy Commissioner
for Patent Examination Policy

STERNE KESSLER GOLDSTEIN & FOX PLLC
1100 NEW YORK AVENUE, NW
SUITE 600
WASHINGTON, DC 20005-3934

UNITED STATES PATENT AND TRADEMARK OFFICE

Commissioner for Patents
United States Patent and Trademark Office
Washington, D.C. 20231
www.uspto.gov

Jean-Francois Zagury
117, rue Vielle du Temple
F-75003
Paris, France AIR MAIL

COPY MAILED

AUG 3 2001

OFFICE OF PETITIONS
A/C PATENTS

In re Application of
Zagury, Rappaport and Carcagno
Application No. 09/572,451
Filed: May 17, 2000
For: ANTI-RETROVIRAL IMMUNOGENS, PREPARATION AND USE

LETTER

Dear Dr. Zagury:

You are named as a joint inventor in the above-identified United States patent application filed under the provisions of 35 U.S.C. 116 (United States Code) and 37 CFR 1.47(a), Rules of Practice in Patent Cases. Should a patent be granted on the application you will be designated therein as a joint inventor.

As a named inventor you are entitled to inspect any paper in the file wrapper of the application, order copies of all or any part thereof (at a prepaid cost per 37 CFR 1.19) or make your position of record in the application. Alternatively, you may arrange to do any of the preceding through a registered patent attorney or agent presenting written authorization from you. If you care to join the application, counsel of record (see below) would presumably assist you. Joining in the application would entail the filing of an appropriate oath or declaration by you pursuant to 37 CFR 1.63.

Telephone inquiries regarding this communication should be directed to Petitions Attorney Christina T. Tartera at (703) 306-5589. Requests for information regarding your application should be directed to the File Information Unit at (703) 308-2733. Information regarding how to pay for and order a copy of the application, or a specific paper in the application, should be directed to Certification Division at (703) 308-9726 or 1-800-972-6382 (outside the Washington D.C. area).

Christina T. Tartera

Christina T. Tartera
Petitions Attorney
Office of Petitions
Office of the Deputy Commissioner
for Patent Examination Policy

STERNE KESSLER GOLDSTEIN & FOX PLLC
1100 NEW YORK AVENUE, NW
SUITE 600
WASHINGTON, DC 20005-3934

UNITED STATES DEPARTMENT OF COMMERCE
Patent and Trademark Office
ASSISTANT SECRETARY AND COMMISSIONER
OF PATENTS AND TRADEMARKS
Washington, DC 20231

RJH
Paper No. 18

OCT 29 2001

In re Application of:
ZAGURY ET AL.
Serial No.: 09/572,451
Filed: May 17, 2000
For: Anti-retroviral Immunogens, Preparation and Use

DECISION ON PETITION

This is a decision on the petition under 37 CFR 1.102 and MPEP 708.02, filed August 23, 2000, to render the application special for examination purposes because the invention relates to the prevention and treatment of HIV/AIDS (MPEP 708.02 (X)).

The petition has been reviewed and it is found to be in compliance with the requirements for special status as set forth in 37 CFR 1.102(d) and in Section 708.02(X) of the Manual of Patent Examining Procedure.

Subject alone to diligent prosecution by the applicants, this application will continue to be treated special throughout the entire prosecution in the Patent and Trademark Office.

The petition is GRANTED.

John Doll, Director
Technology Center 1600

STERNE KESSLER GOLDSTEIN & FOX PLLC
SUITE 600
1100 NEW YORK AVENUE N W
WAHINGTON, DC 20005-3934

UNITED STATES PATENT AND TRADEMARK OFFICE

Commissioner for Patents
United States Patent and Trademark Office
P.O. Box 1450
Alexandria, VA 22313-1450
www.uspto.gov

MARTIN & FERRARO LLP
1557 LAKE O'PINES STREET, NE
HARTVILLE, OH 44632

COPY MAILED

JUL 14 2005

OFFICE OF PETITIONS

ON PETITION

In re Application of :
Gary K. Michelson :
Application No. 09/572,518 :
Filed: May 17, 2000 :
Attorney Docket No. 101.0094-00000

This is a decision on the petition, filed July 14, 2005 under 37 CFR 1.313(c)(2), to withdraw the above-identified application from issue after payment of the issue fee.

The petition is **GRANTED**.

The above-identified application is withdrawn from issue for consideration of a submission under 37 CFR 1.114 (request for continued examination). See 37 CFR 1.313(c)(2).

Petitioner is advised that the issue fee paid on March 16, 2005 in the above-identified application cannot be refunded. If, however, the above-identified application is again allowed, petitioner may request that it be applied towards the issue fee required by the new Notice of Allowance.[1]

Telephone inquiries should be directed to Irvin Dingle at (571) 272-3210.

This matter is being referred to Technology Center AU 3738 for processing of the request for continued examination under 37 CFR 1.114 and for consideration of the concurrently filed amendment.

Irvin Dingle
Petitions Examiner
Office of Petitions
Office of the Deputy Commissioner
for Patent Examination Policy

---

[1] The request to apply the issue fee to the new Notice may be satisfied by completing and returning the new Issue Fee Transmittal Form PTOL-85(b), which includes the following language thereon: Commissioner for Patents is requested to apply the Issue Fee and Publication Fee (if any) or re-apply any previously paid issue fee to the application identified above. Petitioner is advised that, whether a fee is indicated as being due or not, the Issue Fee Transmittal Form **must** be completed and timely submitted to avoid abandonment. Note the language in bold text on the first page of the Notice of Allowance and Fee(s) Due (PTOL-85).

UNITED STATES PATENT AND TRADEMARK OFFICE

Commissioner for Patents
United States Patent and Trademark Office
P.O. Box 1450
Alexandria, VA 22313-1450
www.uspto.gov

WOLF, GREENFIELD & SACKS, P.C.
600 ATLANTIC AVENUE
BOSTON, MA 02210-2206

MAILED

APR 19 2010

OFFICE OF PETITIONS

In re Patent No. 6,941,339 :
Issue Date: September 6, 2005 :
Application No. 09/572,634 : ON PETITION
Filed: May 17, 2000 :
Attorney Docket No: M1252.90001US00 :

This is a decision on the petition filed January 26, 2010 and resubmitted February 25, 2010 under 37 CFR 1.378(c)[1], to accept the delayed payment of the maintenance fee for the above-identified patent.

The petition is **GRANTED.**

The patent issued on September 6, 2005. The first maintenance fee due could have been paid during the period from September 6, 2008 to March 6, 2009 or, with a surcharge during the period from March 7, 2009 to September 6, 2009. Accordingly, this patent expired on September 6, 2009 for failure to timely remit the first maintenance fee.

Accordingly, the maintenance fee in this case is hereby accepted and the above-identified patent is hereby reinstated as of the mail date of this decision. Fees in the amount of $490.00 for the first maintenance fee and $1,640.00 for the surcharge have been applied.

Additionally, there is no indication that petitioner herein was ever empowered to handle matters related to this patent. If petitioner desires to receive future correspondence regarding this patent, the appropriate power of attorney documentation must be submitted. If the new power of attorney and/or change of address is signed by an assignee, the assignee must comply with the requirements of 37 CFR 3.73(b). This decision will be mailed to petitioner, however, all future correspondence will be mailed solely to the correspondence address of record. If petitioner desires to receive future correspondence regarding any Maintenance Fee Reminder or any other matter which **may** be mailed concerning this patent, a Fee Address should be submitted to Maintenance Fee Division.

Telephone inquiries concerning this matter may be directed to the undersigned Petitions Attorney at (571) 272-3212.

Patricia Faison-Ball
Senior Petitions Attorney
Office of Petitions

---

[1] 37 CFR 1.378(c) provides that a petition to accept an unintentionally delayed payment of a maintenance fee must be filed within twenty-four months of the six-month grace period provided in § 1.362(e) and must include:
(1) The required maintenance fee set forth in § 1.20(e) through (g);
(2) The surcharge set forth in § 1.20(l)(2); and
(3) A statement that the delay in payment of the maintenance fee was unintentional.

UNITED STATES PATENT AND TRADEMARK OFFICE

Commissioner for Patents
United States Patent and Trademark Office
P.O. Box 1450
Alexandria, VA 22313-1450
www.uspto.gov

BIRCH STEWART KOLASCH & BIRCH LLP
P.O. BOX 747
FALLS CHURCH, VA 22040-0747

COPY MAILED

JAN 12 2005

OFFICE OF PETITIONS

In re Application of	:	
Sang On Park et al	:	
Application No. 09/572,855	:	ON PETITION
Filed: May 18, 2000	:	
Attorney Docket No. 0465-0700P-SP	:	

This is a decision on the petition under 37 CFR 1.137(b), filed December 14, 2004, to revive the above-identified application.

The petition is **GRANTED**.

The two-month period for filing an appeal brief in triplicate (accompanied by the fee required by 37 CFR 1.17(c)), runs from the date of this decision.

The above-identified application became abandoned for failure to reply in a timely manner to the final Office action mailed May 10, 2004, which set a shortened statutory period for reply of three (3) months. No extensions of time under the provisions of 37 CFR 1.136(a) were obtained. Accordingly, the above-identified application became abandoned on August 11, 2004.

Telephone inquiries concerning this decision should be directed to Irvin Dingle at (571) 272-3210.

The application is being forwarded to Technology Center AU 2653 for further processing.

Irvin Dingle
Petitions Examiner
Office of Petitions
Office of the Deputy Commissioner
for Patent Examination Policy

UNITED STATES PATENT AND TRADEMARK OFFICE

COMMISSIONER FOR PATENTS
UNITED STATES PATENT AND TRADEMARK OFFICE
P.O. BOX 1450
ALEXANDRIA, VA 22313-1450
www.uspto.gov

Paper No. 10

STANLEY B. GREEN
CONNOLLY BOVE LODGE & HUTZ LLP
1990 M STREET, N.W., SUITE 800
WASHINGTON, DC 20036-3425

COPY MAILED

JAN 14 2004

OFFICE OF PETITIONS

In re Application of
Lawrence Ausubel
Application No. 09/573,007
Filed: May 18, 2000
Attorney Docket No. 3788-7008

NOTICE

This is a notice regarding your request for acceptance of a fee deficiency submission under 37 CFR 1.28. On September 1, 1998, the Court of Appeals for the Federal Circuit held that 37 CFR 1.28(c) is the sole provision governing the time for correction of the erroneous payment of the issue fee as a small entity. **See DH Technology v. Synergystex International, Inc. 154 F.3d 1333, 47 USPQ2d 1865 (Fed. Cir. Sept. 1, 1998).**

The Office no longer investigates or rejects original or reissue applications under 37 CFR 1.56. **1098 Off. Gaz. Pat. Office 502 (January 3, 1989).** Therefore, nothing in this Notice is intended to imply that an investigation was done.

Your fee deficiency submission under 37 CFR 1.28 is hereby **ACCEPTED**.

Inquiries related to this communication should be directed to the Office of Petitions Staff at (703) 305-9285.

Further correspondence with respect to this matter should be addressed as follows:

By mail: Mail Stop PETITION
Commissioner for Patents
Post Office Box 1450
Alexandria, VA 22313-1450

Effective December 1, 2003, the Office of Petitions can no longer receive hand-carried correspondence, or facsimile transmissions of correspondence. The centralized location for hand-carried correspondence is the Customer Window located at:

2011 South Clark Place
Crystal Plaza Two, Lobby
Arlington, VA 22202

The centralized facsimile number is **(703) 872-9306.**

This file is being forwarded to Technology Center AU 3628.

Irvin Dingle
Petitions Examiner
Office of Petitions
Office of the Deputy Commissioner
for Patent Examination Policy

UNITED STATES DEPARTMENT OF COMMERCE
Patent and Trademark Office

Address : COMMISSIONER OF PATENTS AND TRADEMARKS
Washington, D.C. 20231

SERIAL NUMBER	FILING DATE	FIRST NAMED APPLICANT	ATTORNEY DOCKET NO.
09/573,080	05/16/00	KNOLL J	30307

HM22/0921

TRACEY S TRUITT
2405 GRAND BOULEVARD
SUITE 400
KANSAS CITY MO 64108

EXAMINER	
MYERS, C	
ART UNIT	PAPER NUMBER
1655	14

DATE MAILED: 09/21/01

The decision on the petition filed in the above entitled application is as follows:

☐ Delay in Prosecution Held Unavoidable (35 U.S.C. 133),

Petition Granted _____

☐ Delayed Payment of Issue Fee Accepted (35 U.S.C. 151),

Petition Granted _____

☒ Petition Granted 1.84(a)(2)

☐ Petition Denied _____

☐ Petition Dismissed _____

By direction of the Deputy
Assistant Commissioner for Patents

_____

W. Gary Jones
Supervisory Patent Examiner
Technology Center 1600

09/573,080

UNITED STATES PATENT AND TRADEMARK OFFICE

COMMISSIONER FOR PATENTS
UNITED STATES PATENT AND TRADEMARK OFFICE
P.O. BOX 1450
ALEXANDRIA, VA 22313-1450
www.uspto.gov

Steven I. Weisburd, Esq.
Dickstein Shapiro Morin & Oshinsky, LLP
1177 Avenue of the Americas, 41st Floor
New York, NY 10036-2714

MAILED

JUN 22 2004

DIRECTOR'S OFFICE
TECHNOLOGY CENTER 3600

In re Application of
Craig E. Stokum et al.
Application No. 09/573,297
Filed: May 18, 2000
For: FINANCING INFORMATION PROCESSING SYSTEM AND METHOD

DECISION ON PETITION TO WITHDRAW THE HOLDING OF ABANDONMENT

This is in reply to the petition to withdraw the holding of abandonment under 37 CFR 1.181, filed in the United States Patent and Trademark Office, on March 29, 2004.

The petition is **GRANTED** in view of the following evidence of timely filing :

☐ Postcard receipt being dated_____.

☐ USPTO return facsimile receipt dated _____ which identifies the application by serial number and the type of Response that was filed on that date.

☒ Certificate of Mailing/Transmission signed on September 4, 2003 and supported by a statement under 37 C.F.R. 1.8(b)(3).

☐ Hand Delivery Receipt of the specific documents submitted dated _____.

☐ Certificate of Transmission of CPA under 37 C.F.R. 1.6 filed on _____.

☐ Express Mail Receipt under 37 C.F.R. 1.10 dated _____.

This application is being forwarded to the Supervisory Legal Instruments Examiner for entry of the response filed with the petition, then to the examiner for prompt action on the response.

SNM/mjz: 6/3/04

STEVEN N. MEYERS
SPECIAL PROGRAM EXAMINER
TECHNOLOGY CENTER 3600

UNITED STATES PATENT AND TRADEMARK OFFICE

COMMISSIONER FOR PATENTS
UNITED STATES PATENT AND TRADEMARK OFFICE
P.O. BOX 1450
ALEXANDRIA, VA 22313-1450
www.uspto.gov

KATTEN MUCHIN ROSENMAN LLP
575 MADISON AVENUE
NEW YORK, NY 10022-2585

COPY MAILED
SEP 0 7 2006
OFFICE OF PETITIONS

In re Application of	:	
Natsuko Nobukuni, et al.	:	
Application No. 09/573,319	:	ON PETITION
Filed: May 18, 2000	:	
Attorney Docket No.: SAN17.343	:	

This is a decision on the petition, filed August 31, 2006, under 37 CFR 1.313(c)(2) to withdraw the above-identified application from issue after payment of the issue fee.

The petition is **GRANTED**.

The above-identified application is withdrawn from issue for consideration of a submission under 37 CFR 1.114 (request for continued examination). See 37 CFR 1.313(c)(2).

Petitioner is advised that the issue fee paid on June 28, 2006, in the above-identified application cannot be refunded. If, however, the above-identified application is again allowed, petitioner may request that it be applied towards the issue fee required by the new Notice of Allowance. [1]

Telephone inquiries relating to this decision should be directed to the undersigned at (571) 272-3204.

The application is being referred to Technology Center AU 1774 for further processing of the request for continued examination under 37 CFR 1.114.

Sherry D. Brinkley
Petitions Examiner
Office of Petitions

[1]The request to apply the issue fee to the new Notice may be satisfied by completing and returning the new Issue Fee Transmittal Form PTOL-85(b), which includes the following language thereon: "Commissioner for Patents is requested to apply the Issue Fee and Publication Fee (if any) or re-apply any previously paid issue fee to the application identified above." Petitioner is advised that, whether a fee is indicated as being due or not, the Issue Fee Transmittal Form **must** be completed and timely submitted to avoid abandonment. Note the language in bold text on the first page of the Notice of Allowance and Fee(s) Due (PTOL-85).

UNITED STATES PATENT AND TRADEMARK OFFICE

COMMISSIONER FOR PATENTS
UNITED STATES PATENT AND TRADEMARK OFFICE
P.O. BOX 1450
ALEXANDRIA, VA 22313-1450
www.uspto.gov

Paper No. 29

STERNE, KESSLER, GOLDSTEIN & FOX PLLC
1100 New York Avenue, N.W.
Washington, DC 20005

JAN 16 2004

In re Application of:
Haideh Khorramabadi
Serial No.: 09/573,356
Filed: May 17, 2000
Attorney Docket No.: **1875.138000A**

DECISION ON PETITION TO WITHDRAW HOLDING OF ABANDONMENT

This is the petition filed on November 03, 2003, under 37 C.F.R. § 1.181, to withdraw the holding of abandonment of the above-identified application. No fee is required.

The petition is **GRANTED**.

The application was held abandoned for failure to timely file a proper reply to the Office letter mailed on April 07, 2003. A Notice of Abandonment was mailed on October 03, 2003.

Petitioner asserts that on March 17, 2003, a communication including a Request for Continued Examination (RCE), and Information Disclosure Statement (IDS), a form PTO-1449, copies of three (3) cited references, a Request for Corrected Official Filing Receipt with a marked-up copy, an amendment under 37 C.F.R. § 1.111 and a Credit Card Payment form were filed. To support this assertion, petitioner has submitted a copy of the communication along with a copy of a return postcard, which acknowledges receipt of a communication on March 17, 2003.

A review of the application file record reveals that the above-identified response having been acknowledged as being received in the PTO on March 17, 2003, is not of record in the application file and cannot be located. However, M.P.E.P. § 503 states, "A postcard receipt which itemizes and properly identifies the items which are being filed serves as *prima facie* evidence of receipt in the PTO of all the items listed thereon on the date stamped thereon by the PTO." Accordingly, it is concluded that the response was timely received in the PTO but lost somewhere after receipt thereof.

A further review of the application file reveals that the Office letter mailed on April 07, 2003, was sent to an incorrect correspondence address. Accordingly, it cannot be presumed that the Office action reached practitioner at the correspondence address of record. It appears that the issues raised by the Office letter were rendered moot by the filing of the RCE. As such, the

Office letter mailed April 07, 2003, is hereby vacated and the requirements made therein are withdrawn. A copy of the letter is included with this decision for the petitioner's records.

For the above stated reason, the petition is granted. The Notice of Abandonment is hereby vacated and the holding of abandonment withdrawn. The application is restored to pending status.

The copy of the response submitted with the petition on November 03, 2003, is accepted since the response originally submitted was apparently lost.

The application file is being forwarded to the Technology Center 2800 support staff for processing the RCE. From there, the application will be forwarded to the examiner for taking appropriate action.

Inquiries regarding this decision should be directed to Clayton E. LaBalle at (703) 308-0519.

Sharon A. Gibson, Director
Technology Center 2800
Semiconductors, Electrical and Optical
Systems and Components

Enclosure: copy of Office letter mailed April 07, 2003

UNITED STATES PATENT AND TRADEMARK OFFICE

Commissioner for Patents
United States Patent and Trademark Office
PO Box 1450
Arlington, VA 22313-1450
www.uspto.gov

Paper No. 22

COPY MAILED

SEP 2 2 2003

OFFICE OF PETITIONS

Katten Muchin Zavis Rosenman
575 Madison Avenue
New York, NY 10022-2585

In re Application of :
Emilio et al. :
Application No. 09/573,454 :
Filed: May 17, 2000 :
Attorney Docket No. BMEP 18.856 :

ON PETITION

This is a decision on the petition under 37 CFR 1.137(b), filed September 8, 2003, to revive the above-identified application.

The petition is **GRANTED**.

The above-identified application became abandoned for failure to reply within the meaning of 37 CFR 1.113 in a timely manner in reply to the final Office action mailed December 31, 2002, which set a shortened statutory period for reply of three months. No extensions of time under the provisions of 37 CFR 1.136 have been obtained. Accordingly, the application became abandoned on March 31, 2003.

This application is being forwarded to Technology Center AU 1644 for processing the Request for Continued Examination pursuant to 37 CFR 1.114 filed with the instant petition.

Telephone inquiries regarding this decision may be directed to the undersigned at (703) 308-6911.

Latrice Bond

Latrice Bond
Paralegal Specialist
Office of Petitions
Office of the Deputy Commissioner
for Patent Examination Policy

SPE RESPONSE FOR CERTIFICATE OF CORRECTION

Paper No.: _____

DATE : November 28, 2006

TO SPE OF : ART UNIT 1643

SUBJECT : Request for Certificate of Correction for Appl. No.: 09/573473 patent No.: 7,094,873

Please respond to this request for a certificate of correction within 7 days.

Please review the requested changes/corrections as shown in the **COCIN** document(s) in the IFW application image. No new matter should be introduced, nor should the scope or meaning of the claims be changed.

Please complete the response (see below) and forward the completed response to scanning using document code **COCX**.

Magdalene Talley

Certificates of Correction Branch

703-308-9390 ext. 116

Thank You For Your Assistance

The request for issuing the above-identified correction(s) is hereby:

Note your decision on the appropriate box.

- [x] **Approved** — All changes apply.
- [ ] **Approved in Part** — Specify below which changes **do not** apply.
- [ ] **Denied** — State the reasons for denial below.

Comments: _____

LARRY R. HELMS, PH.D.
SUPERVISORY PATENT EXAMINER

SPE — **Art Unit** 1643

UNITED STATES DEPARTMENT OF COMMERCE
Patent and Trademark Office
ASSISTANT SECRETARY AND COMMISSIONER
OF PATENTS AND TRADEMARKS
Washington, D.C. 20231

In re Application of Dollins et al.
Serial No. 09/573,490
Filed: 06/16/2000
For: Indicia-Coded Electrical Cable

: DECISION ON PETITION UNDER
: 37 CFR 1.97(d)

This is a decision on the petition for consideration of the Information Disclosure Statement filed 09/18/2003 under 37 CFR 1.97(d).

The petition is denied.

Information Disclosure Statements filed after mailing of either a final action or a Notice of Allowance, but prior to or simultaneously with payment of the issue fee, will be considered by the examiner provided the statement is accompanied by:

1. A certification as specified in 37 CFR 1.97(e)
2. A petition requesting consideration of the Information Disclosure Statement, and
3. The petition fee set forth in 37 CFR 1.17 (I)(1)

In this instance, the petitioner has failed to provide numbers 1 and 3 above. The Information Disclosure Statement will be placed in the file, but will not be considered.

Dean A. Reichard 8/21/03

Dean A. Reichard, Supervisory Patent Examiner
Technology Center 2800
(703)308-3682

JUL 25 2001

UNITED STATES PATENT AND TRADEMARK OFFICE

COMMISSIONER FOR PATENTS
UNITED STATES PATENT AND TRADEMARK OFFICE
WASHINGTON, DC 20231
www.uspto.gov

Sarah B. Adriano
Mandel & Adriano
35 No. Arroyo Parkway, Suite 60
Pasadena, California 91103

In re Application of
Ke Shuai et al.
Application No.: 09/573,651
PCT No.: PCT/US98/25316
Int. Filing Date: 27 November 1998
Priority Date: 28 November 1997
Attorney's Docket No.: 30435.59USWO
For: PIAS MOLECULES THAT RECOGNIZE AND BIND STAT PROTEINS AND USES THEREOF

DECISION

This decision is in response to the "Response to Notice to File Missing Parts of Nonprovisional Application Under 37 C.F.R. §1.53(b) and Petition to Correct Filing Receipt and Acknowledge Application as Based Upon International Application No. PCT/US98/25316" filed 13 November 2000 and the "Status Inquiry" filed the 12 March 2001, requesting that the present application be treated as a filing under 35 U.S.C. 371.

BACKGROUND

On 27 November 1998, applicant filed international application PCT/US98/25316 which claimed priority to an earlier United States application having a filing date of 28 November 1997. A Demand for international preliminary examination, in which the United States was elected, was filed on 22 June 1999. Accordingly, the thirty-month period for paying the basic national stage in the United States expired 28 May 2000.

On 18 May 2000, applicant filed in the United States Patent and Trademark Office (USPTO) a transmittal letter, a copy of the international application, a small entity statement, a sequence listing in paper form and computer readable form and the basic national fee. Applicant enclosed a check in the amount of $239 which included a basic fee of $48, a $65 surcharge for furnishing the oath/declaration later that 30 months from the earliest priority date and extra claim fees of $126. The application was processed under 35 U.S.C. §111(a).

On 26 October 2000, the USPTO mailed applicant a "NOTICE TO FILE MISSING PARTS OF NONPROVISIONAL APPLICATION Filed Under 37 CFR 1.53(b)."

On13 November 2000, applicant filed a "Response to Notice to 'File Missing Parts of Nonprovisional Application Under 37 C.F.R §1.53(b) and Petition to Correct Filing Receipt and Acknowledge Application as Based Upon International Application No. PCT/US98/25316.". This response was accompanied by, *inter alia,* a transmittal sheet and a declaration.

DISCUSSION

118 OG 49 indicates:

"The Patent and Trademark Office is continuing to receive application papers which do not clearly identify whether the papers (1) are being submitted to enter the national stage of the Patent Cooperation Treaty (PCT) under 35 U.S.C. 371 or (2) are being filed as a regular national application under 35 U.S.C. 111...

...To clearly indicate an international application is being filed under 35 U.S.C. 371 the applicant should use the "Transmittal Letter for the United States Designated Office" (Form PTO-1390) as the transmittal letter.

Alternatively, one of the following indications may be used:

1) the applicant shall clearly state in the transmittal or cover letter that he or she is filing under 35 U.S.C. 371 or entering the national stage under the PCT; or

2) the applicant clearly identifies in the oath or declaration the specification to which it is directed by referring to a particular international application by PCT Serial Number and International Filing Date and that he or she is executing the declaration as, and seeking a U.S. Patent as, the inventor of the invention described in the identified international application."

On 18 May 2000, applicant filed a "TRANSMITTAL LETTER TO THE UNITED STATES DESIGNATED/ELECTED OFFICE (DO/EO/US) CONCERNING A FILING UNDER 35 U.S.C. 371" (Form PTO-1390). There are no conflicting instructions. It is clear from the transmittal letter that applicant intended to file a National Stage application under 35 U.S.C. 371.

With respect to the fees, applicant submitted a check at the time of filing for $239. An additional $434 was charged to applicant's Deposit Account. These fees will be applied to the national stage fees.

CONCLUSION

For reasons above, the petition to treat the present application as filed under 35 U.S.C. 371 is **GRANTED**. The "NOTICE TO FILE MISSING PARTS OF NONPROVISIONAL APPLICATION Filed Under 37 CFR 1.53(b)" is hereby **VACATED**.

This application is being forwarded to the United States Designated/Elected Office for processing under 35 U.S.C. 371.

Debra S. Brittingham
PCT Legal Office
DSB/BM:dsb

Tel: (703) 308-3401
Fax: (703) 308-6459

Boris Milef
PCT Legal Examiner
PCT Legal Office

08 AUG 2003

UNITED STATES PATENT AND TRADEMARK OFFICE

COMMISSIONER FOR PATENTS
UNITED STATES PATENT AND TRADEMARK OFFICE
P.O. BOX 1450
ALEXANDRIA, VA 22313-1450
www.uspto.gov

Mandel & Adriano
55 South Lake Avenue, Suite 710
Pasadena, CA 91101

In re Application of SHUAI et al :
U.S. Application No.: 09/573,651 :
PCT Application No.: PCT/US98/25316 :
Int. Filing Date: 27 November 1998 : DECISION
Priority Date Claimed: 28 November 1997 :
Attorney Docket No.: 30435.59USWO :
For: PIAS MOLECULES THAT RECOGNIZE :
AND BIND STAT PROTEINS AND USES :
THEREOF :

This is in response to applicant's communication filed 12 July 2003.

BACKGROUND

On 18 May 2000, applicant filed national stage papers in the United States Designated/Elected Office (DO/EO/US) including, *inter alia*, the basic national fee and a sequence listing in paper and computer readable form.

On 26 October 2000, the USPTO mailed a Notice to File Missing Parts of Nonprovisional Application, which indicated that an oath or declaration must be filed.

On 13 November 2000, applicant filed executed declarations.

On 19 November 2001, the USPTO mailed a Notification of Defective Response, which indicated that an oath or declaration and a sequence listing in computer readable form must be submitted.

On 12 July 2003, applicant filed the present communication including copies of all correspondence for the purpose of reconstructing a lost application file.

On 14 July 2003, the USPTO mailed a Notice of Abandonment.

DISCUSSION

The original application file has been located. Upon review of the application file, the Notification of Defective Response and the Notice of Abandonment were sent in error.

CONCLUSION

For the reasons above, the Notification of Defective Response mailed 19 November 2001 and the Notice of Abandonment mailed 14 July 2003 are hereby VACATED.

The application has an International Filing Date under 35 U.S.C. 363 of 27 November 1998, and a date under 35 U.S.C. 371(c) of 13 November 2000.

This application is being forwarded to the United States Designated/Elected Office (DO/EO/US) for further processing in accordance with this decision.

Bryan Tung
PCT Legal Examiner
PCT Legal Office

Telephone: 703-308-6614
Facsimile: 703-308-6459

10 AUG 2004

UNITED STATES PATENT AND TRADEMARK OFFICE

COMMISSIONER FOR PATENTS
UNITED STATES PATENT AND TRADEMARK OFFICE
P.O. BOX 1450
ALEXANDRIA, VA 22313-1450
www.uspto.gov

Mandel & Adriano
55 South Lake Avenue, Suite 710
Pasadena, CA 91101

In re Application of SHUAI et al	:	
U.S. Application No.: 09/573,651	:	
PCT Application No.: PCT/US98/25316	:	
Int. Filing Date: 27 November 1998	:	DECISION
Priority Date Claimed: 28 November 1997	:	
Attorney Docket No.: 30435.59USWO	:	
For: PIAS MOLECULES THAT RECOGNIZE	:	
AND BIND STAT PROTEINS AND USES	:	
THEREOF	:	

This is in response to applicant's communication filed 26 July 2004, which is being treated as a petition under 37 CFR 1.181. No petition fee is due.

BACKGROUND

On 18 May 2000, applicant filed national stage papers in the United States Designated/Elected Office (DO/EO/US) including, *inter alia*, the basic national fee and a sequence listing in paper and computer readable form.

On 26 October 2000, the USPTO mailed a Notice to File Missing Parts of Nonprovisional Application, which indicated that an oath or declaration must be filed.

On 13 November 2000, applicant filed executed declarations.

On 19 November 2001, the USPTO mailed a Notification of Defective Response, which indicated that an oath or declaration and a sequence listing in computer readable form must be submitted.

On 12 July 2003, applicant filed a communication including copies of all correspondence for the purpose of reconstructing a lost application file.

On 14 July 2003, the USPTO mailed a Notice of Abandonment.

On 08 August 2003, this Office mailed a decision vacating the Notification of Defective Response and the Notice of Abandonment.

On 27 August 2003, the DO/EO/US mailed a Notification to Comply with Requirements for Patent Applications Containing Nucleotide and/or Amino Acid Sequence Disclosures (Form PCT/DO/EO/922).

On 27 October 2003, applicant purportedly filed a response to the 27 August 2003 notification.

On 26 July 2004, applicant filed the present petition under 37 CFR 1.181.

DISCUSSION

The evidence of record is sufficient to establish that the response was originally filed on 27 October 2003. Specifically, the copy of the return postcard, which includes the response in its itemized contents and which bears a USPTO date stamp of 27 October 2003, serves as *prima facie* evidence that the response was received by the USPTO on 27 October 2003.

CONCLUSION

For the reasons above, the petition under 37 CFR 1.181 is granted.

The application has an International Filing Date under 35 U.S.C. 363 of 27 November 1998, and a date under 35 U.S.C. 371(c) of 13 November 2000.

This application is being forwarded to the United States Designated/Elected Office (DO/EO/US) for further processing in accordance with this decision, including checking the paper and electronic copies of the sequence listing for compliance.

Bryan Tung
PCT Legal Examiner
PCT Legal Office

Telephone: 703-308-6614
Facsimile: 703-308-6459

Mandel & Adriano :626-395-0694

*** Transmit Conf. Report ***

P.1 Dec 19 2001 15:21

Fax/Phone Number	Mode	Start	Time	Page	Result	Note
17033086459	NORMAL	19,15:21	0'45"	2	* O K	

MANDEL & ADRIANO

INTELLECTUAL PROPERTY ATTORNEYS

35 N. ARROYO PARKWAY, SUITE 60
PASADENA, CALIFORNIA 91103
PHONE 626/395-7801
FAX 626/395-0694

FACSIMILE TRANSMISSION

To: PCT Legal Office
Title:
Institution: United States Patent and Trademark Office
Group Art Unit:
U.S. Serial No.: 09/573,651
Facsimile No.: 703/308-6459
Total No. of pages: 2

From: Sarah B. Adriano
Date: December 19, 2001
Dkt. No.: 30435.59USWO

Certificate under 37 C.F.R. §1.8: I hereby certify that this paper and the attachments herewith are being deposited by facsimile with the Assistant Commissioner of Patents and Trademarks, Washington DC 20231 on December 19, 2001.

JUL 25 2001

UNITED STATES PATENT AND TRADEMARK OFFICE

COMMISSIONER FOR PATENTS
UNITED STATES PATENT AND TRADEMARK OFFICE
WASHINGTON, DC 20231
www.uspto.gov

Sarah B. Adriano
Mandel & Adriano
35 No. Arroyo Parkway, Suite 60
Pasadena, California 91103

JUL 31 2001

In re Application of
Ke Shuai et al.
Application No.: 09/573,651
PCT No.: PCT/US98/25316
Int. Filing Date: 27 November 1998
Priority Date: 28 November 1997
Attorney's Docket No.: 30435.59USWO
For: PIAS MOLECULES THAT RECOGNIZE AND BIND STAT PROTEINS AND USES THEREOF

DECISION

This decision is in response to the "Response to Notice to File Missing Parts of Nonprovisional Application Under 37 C.F.R. §1.53(b) and Petition to Correct Filing Receipt and Acknowledge Application as Based Upon International Application No. PCT/US98/25316" filed 13 November 2000 and the "Status Inquiry" filed the 12 March 2001, requesting that the present application be treated as a filing under 35 U.S.C. 371.

BACKGROUND

On 27 November 1998, applicant filed international application PCT/US98/25316 which claimed priority to an earlier United States application having a filing date of 28 November 1997. A Demand for international preliminary examination, in which the United States was elected, was filed on 22 June 1999. Accordingly, the thirty-month period for paying the basic national stage in the United States expired 28 May 2000.

On 18 May 2000, applicant filed in the United States Patent and Trademark Office (USPTO) a transmittal letter, a copy of the international application, a small entity statement, a sequence listing in paper form and computer readable form and the basic national fee. Applicant enclosed a check in the amount of $239 which included a basic fee of $48, a $65 surcharge for furnishing the oath/declaration later that 30 months from the earliest priority date and extra claim fees of $126. The application was processed under 35 U.S.C. §111(a).

On 26 October 2000, the USPTO mailed applicant a "NOTICE TO FILE MISSING PARTS OF NONPROVISIONAL APPLICATION Filed Under 37 CFR 1.53(b)."

On13 November 2000, applicant filed a "Response to Notice to 'File Missing Parts of Nonprovisional Application Under 37 C.F.R §1.53(b) and Petition to Correct Filing Receipt and Acknowledge Application as Based Upon International Application No. PCT/US98/25316.". This response was accompanied by, *inter alia*, a transmittal sheet and a declaration.

DISCUSSION

118 OG 49 indicates:

> "The Patent and Trademark Office is continuing to receive application papers which do not clearly identify whether the papers (1) are being submitted to enter the national stage of the Patent Cooperation Treaty (PCT) under 35 U.S.C. 371 or (2) are being filed as a regular national application under 35 U.S.C. 111...
>
> ...To clearly indicate an international application is being filed under 35 U.S.C. 371 the applicant should use the "Transmittal Letter for the United States Designated Office" (Form PTO-1390) as the transmittal letter.
>
> Alternatively, one of the following indications may be used:
>
> 1) the applicant shall clearly state in the transmittal or cover letter that he or she is filing under 35 U.S.C. 371 or entering the national stage under the PCT; or
>
> 2) the applicant clearly identifies in the oath or declaration the specification to which it is directed by referring to a particular international application by PCT Serial Number and International Filing Date and that he or she is executing the declaration as, and seeking a U.S. Patent as, the inventor of the invention described in the identified international application."

On 18 May 2000, applicant filed a "TRANSMITTAL LETTER TO THE UNITED STATES DESIGNATED/ELECTED OFFICE (DO/EO/US) CONCERNING A FILING UNDER 35 U.S.C. 371" (Form PTO-1390). There are no conflicting instructions. It is clear from the transmittal letter that applicant intended to file a National Stage application under 35 U.S.C. 371.

With respect to the fees, applicant submitted a check at the time of filing for $239. An additional $434 was charged to applicant's Deposit Account. These fees will be applied to the national stage fees.

CONCLUSION

For reasons above, the petition to treat the present application as filed under 35 U.S.C. 371 is **GRANTED**. The "NOTICE TO FILE MISSING PARTS OF NONPROVISIONAL APPLICATION Filed Under 37 CFR 1.53(b)" is hereby **VACATED**.

This application is being forwarded to the United States Designated/Elected Office for processing under 35 U.S.C. 371.

Debra S. Brittingham
PCT Legal Office
DSB/BM:dsb

Tel: (703) 308-3401
Fax: (703) 308-6459

Boris Milef
PCT Legal Examiner
PCT Legal Office

EXHIBIT C

Copy of the Decision from USPTO for U.S. Serial No. 09/573,651 dated July 25, 2001

JUL 25 2001

UNITED STATES PATENT AND TRADEMARK OFFICE

COMMISSIONER FOR PATENTS
UNITED STATES PATENT AND TRADEMARK OFFICE
WASHINGTON, DC 20231
www.uspto.gov

Sarah B. Adriano
Mandel & Adriano
35 No. Arroyo Parkway, Suite 60
Pasadena, California 91103

JUL 31 2001

In re Application of
Ke Shuai et al.
Application No.: 09/573,651
PCT No.: PCT/US98/25316
Int. Filing Date: 27 November 1998
Priority Date: 28 November 1997
Attorney's Docket No.: 30435.59USWO
For: PIAS MOLECULES THAT RECOGNIZE AND BIND STAT PROTEINS AND USES THEREOF

DECISION

This decision is in response to the "Response to Notice to File Missing Parts of Nonprovisional Application Under 37 C.F.R. §1.53(b) and Petition to Correct Filing Receipt and Acknowledge Application as Based Upon International Application No. PCT/US98/25316" filed 13 November 2000 and the "Status Inquiry" filed the 12 March 2001, requesting that the present application be treated as a filing under 35 U.S.C. 371.

BACKGROUND

On 27 November 1998, applicant filed international application PCT/US98/25316 which claimed priority to an earlier United States application having a filing date of 28 November 1997. A Demand for international preliminary examination, in which the United States was elected, was filed on 22 June 1999. Accordingly, the thirty-month period for paying the basic national stage in the United States expired 28 May 2000.

On 18 May 2000, applicant filed in the United States Patent and Trademark Office (USPTO) a transmittal letter, a copy of the international application, a small entity statement, a sequence listing in paper form and computer readable form and the basic national fee. Applicant enclosed a check in the amount of $239 which included a basic fee of $48, a $65 surcharge for furnishing the oath/declaration later that 30 months from the earliest priority date and extra claim fees of $126. The application was processed under 35 U.S.C. §111(a).

On 26 October 2000, the USPTO mailed applicant a "NOTICE TO FILE MISSING PARTS OF NONPROVISIONAL APPLICATION Filed Under 37 CFR 1.53(b)."

On13 November 2000, applicant filed a "Response to Notice to 'File Missing Parts of Nonprovisional Application Under 37 C.F.R §1.53(b) and Petition to Correct Filing Receipt and Acknowledge Application as Based Upon International Application No. PCT/US98/25316.". This response was accompanied by, *inter alia*, a transmittal sheet and a declaration.

DISCUSSION

118 OG 49 indicates:

> "The Patent and Trademark Office is continuing to receive application papers which do not clearly identify whether the papers (1) are being submitted to enter the national stage of the Patent Cooperation Treaty (PCT) under 35 U.S.C. 371 or (2) are being filed as a regular national application under 35 U.S.C. 111...
>
> ...To clearly indicate an international application is being filed under 35 U.S.C. 371 the applicant should use the "Transmittal Letter for the United States Designated Office" (Form PTO-1390) as the transmittal letter.
>
> Alternatively, one of the following indications may be used:
>
> 1) the applicant shall clearly state in the transmittal or cover letter that he or she is filing under 35 U.S.C. 371 or entering the national stage under the PCT; or
>
> 2) the applicant clearly identifies in the oath or declaration the specification to which it is directed by referring to a particular international application by PCT Serial Number and International Filing Date and that he or she is executing the declaration as, and seeking a U.S. Patent as, the inventor of the invention described in the identified international application."

On 18 May 2000, applicant filed a "TRANSMITTAL LETTER TO THE UNITED STATES DESIGNATED/ELECTED OFFICE (DO/EO/US) CONCERNING A FILING UNDER 35 U.S.C. 371" (Form PTO-1390). There are no conflicting instructions. It is clear from the transmittal letter that applicant intended to file a National Stage application under 35 U.S.C. 371.

With respect to the fees, applicant submitted a check at the time of filing for $239. An additional $434 was charged to applicant's Deposit Account. These fees will be applied to the national stage fees.

CONCLUSION

For reasons above, the petition to treat the present application as filed under 35 U.S.C. 371 is **GRANTED**. The "NOTICE TO FILE MISSING PARTS OF NONPROVISIONAL APPLICATION Filed Under 37 CFR 1.53(b)" is hereby **VACATED**.

This application is being forwarded to the United States Designated/Elected Office for processing under 35 U.S.C. 371.

Debra S. Brittingham
PCT Legal Office
DSB/BM:dsb

Tel: (703) 308-3401
Fax: (703) 308-6459

Boris Milef
PCT Legal Examiner
PCT Legal Office

Under the Paperwork Reduction Act of 1995, no persons are required to respond to a collection of information unless it displays valid OMB control number.

PETITION TO ACCEPT UNINTENTIONALLY DELAYED PAYMENT OF MAINTENANCE FEE IN AN EXPIRED PATENT (37 CFR 1.378(c))

Patent Number	Issue Date (YYYY-MM-DD)	Application Number	Filing Date (YYYY-MM-DD)	Docket Number (if applicable)
6,534,324	2003-03-18	09/573,717	2000-05-12	20207-100US

CAUTION: Maintenance fee (and surcharge, if any) payment must correctly identify: (1) the patent number and (2) the application number of the actual U.S. application leading to issuance of that patent to ensure the fee(s) is/are associated with the correct patent. 37 CFR 1.366(c) and (d).

SMALL ENTITY
☒ Patentee claims, or has previously claimed, small entity status. See 37 CFR 1.27.

LOSS OF ENTITLEMENT TO SMALL ENTITY STATUS
☐ Patentee is no longer entitled to small entity status. See 37 CFR 1.27(g)

NOT Small Entity		Small Entity	
Fee	Code	Fee	Code
○ 3 ½ year	(1551)	◉ 3 ½ year	(2551)
○ 7 ½ year	(1552)	○ 7 ½ year	(2552)
○ 11 ½ year	(1553)	○ 11 ½ year	(2553)

SURCHARGE
The surcharge required by 37 CFR 1.20(i)(2) (Fee Code 1558) must be paid as a condition of accepting unintentionally delayed payment of the maintenance fee.

MAINTENANCE FEE (37 CFR 1.20(e)-(g))
The appropriate maintenance fee must be submitted with this petition.

STATEMENT
THE UNDERSIGNED CERTIFIES THAT THE DELAY IN PAYMENT OF THE MAINTENANCE FEE TO THIS PATENT WAS UNINTENTIONAL

PETITIONER(S) REQUEST THAT THE DELAYED PAYMENT OF THE MAINTENANCE FEE BE ACCEPTED AND THE PATENT REINSTATED

THIS PORTION MUST BE COMPLETED BY THE SIGNATORY OR SIGNATORIES

37 CFR 1.378(d) states: "Any petition under this section must be signed by an attorney or agent registered to practice before the Patent and Trademark Office, or by the patentee, the assignee, or other party in interest."

I certify, in accordance with 37 CFR 1.4(d)(4) that I am

◉ An attorney or agent registered to practice before the Patent and Trademark Office

○ A sole patentee

○ A joint patentee; I certify that I am authorized to sign this submission on behalf of all the other patentees.

○ A joint patentee; all of whom are signing this e-petition

○ The assignee of record of the entire interest

Patent Practitioner			
A signature of the applicant or representative is required in accordance with 37 CFR 1.33 and 10.18. Please see 37 CFR 1.4(d) for the form of the signature			
Signature	/Bernard L. Kleinke/	Date (YYYY-MM-DD)	2008-01-25
Name	Bernard L. Kleinke	Registration Number	22123

This collection of information is required by 37 CFR 1.378(c). The information is required to obtain or retain a benefit by the public which is to file (and by the USPTO to process) an application. Confidentiality is governed by 35 U.S.C. 122 and 37 CFR 1.11 and 1.14. This collection is estimated to take 1 hour to complete, including gathering, preparing, and submitting the completed application form to the USPTO. Time will vary depending upon the individual case. Any comments on the amount of time you require to complete this form and/ or suggestions for reducing this burden, should be sent to the Chief Information Officer, U.S. Patent and Trademark Office, U.S. Department of Commerce, P.O. Box 1450, Alexandria, VA 22313-1450. DO NOT SEND FEES OR COMPLETED FORMS TO THIS ADDRESS. **This form can only be used when in conjunction with EFS-Web. If this form is mailed to the USPTO, it may cause delays in reinstating the patent.**

Privacy Act Statement

The Privacy Act of 1974 (P.L. 93-579) requires that you be given certain information in connection with your submission of the attached form related to a patent application or patent. Accordingly, pursuant to the requirements of the Act, please be advised that: (1) the general authority for the collection of this information is 35 U.S.C. 2(b)(2); (2) furnishing of the information solicited is voluntary; and (3) the principal purpose for which the information is used by the U.S. Patent and Trademark Office is to process and/or examine your submission related to a patent application or patent. If you do not furnish the requested information, the U.S. Patent and Trademark Office may not be able to process and/or examine your submission, which may result in termination of proceedings or abandonment of the application or expiration of the patent.

The information provided by you in this form will be subject to the following routine uses:

1. The information on this form will be treated confidentially to the extent allowed under the Freedom of Information Act (5 U.S.C. 552) and the Privacy Act (5 U.S.C. 552a). Records from this system of records may be disclosed to the Department of Justice to determine whether the Freedom of Information Act requires disclosure of these record s.

2. A record from this system of records may be disclosed, as a routine use, in the course of presenting evidence to a court, magistrate, or administrative tribunal, including disclosures to opposing counsel in the course of settlement negotiations.

3. A record in this system of records may be disclosed, as a routine use, to a Member of Congress submitting a request involving an individual, to whom the record pertains, when the individual has requested assistance from the Member with respect to the subject matter of the record.

4. A record in this system of records may be disclosed, as a routine use, to a contractor of the Agency having need for the information in order to perform a contract. Recipients of information shall be required to comply with the requirements of the Privacy Act of 1974, as amended, pursuant to 5 U.S.C. 552a(m).

5. A record related to an International Application filed under the Patent Cooperation Treaty in this system of records may be disclosed, as a routine use, to the International Bureau of the World Intellectual Property Organization, pursuant to the Patent Cooperation Treaty.

6. A record in this system of records may be disclosed, as a routine use, to another federal agency for purposes of National Security review (35 U.S.C. 181) and for review pursuant to the Atomic Energy Act (42 U.S.C. 218(c)).

7. A record from this system of records may be disclosed, as a routine use, to the Administrator, General Services, or his/her designee, during an inspection of records conducted by GSA as part of that agency's responsibility to recommend improvements in records management practices and programs, under authority of 44 U.S.C. 2904 and 2906. Such disclosure shall be made in accordance with the GSA regulations governing inspection of records for this purpose, and any other relevant (i.e., GSA or Commerce) directive. Such disclosure shall not be used to make determinations about individuals.

8. A record from this system of records may be disclosed, as a routine use, to the public after either publication of the application pursuant to 35 U.S.C. 122(b) or issuance of a patent pursuant to 35 U.S.C. 151. Further, a record may be disclosed, subject to the limitations of 37 CFR 1.14, as a routine use, to the public if the record was filed in an application which became abandoned or in which the proceedings were terminated and which application is referenced by either a published application, an application open to public inspections or an issued patent.

9. A record from this system of records may be disclosed, as a routine use, to a Federal, State, or local law enforcement agency, if the USPTO becomes aware of a violation or potential violation of law or regulation.

UNITED STATES PATENT AND TRADEMARK OFFICE

Commissioner for Patents
United States Patent and Trademark Office
P.O. Box 1450
Alexandria, VA 22313-1450
www.uspto.gov

In re Patent No. 6534324
Issue Date: March 18,2003
Application No. 09573717
Filed: May 12,2000
Attorney Docket No. 20207-100

:

:DECISION GRANTING PETITION
:UNDER 37 CFR 1.378(c)

:

This is a decision on the electronic petition, filed January 25,2008 ,under 37 CFR 1.378(c) to accept the unintentionally delayed payment of the 3.5 year maintenance fee for the above-identified patent.

The petition is GRANTED.

The maintenance fee is accepted, and the above-identified patent reinstated as of January 25,2008 . This decision also constitutes notice that the fee has been accepted. An electronic copy of the petition and this decision has been created as an entry in an Image File Wrapper. Nevertheless, petitioner should print and retain an independent copy

Telephone inquires related to this electronic decision should be directed to the Electronic Business Center at 1-866-217-9197.

UNITED STATES PATENT AND TRADEMARK OFFICE

COMMISSIONER FOR PATENTS
UNITED STATES PATENT AND TRADEMARK OFFICE
P.O. BOX 1450
ALEXANDRIA, VA 22313-1450
www.uspto.gov

ALLEN C TURNER
TRASK BRITT
PO BOX 2550
SALT LAKE CITY, UT 84110

COPY MAILED

OCT 0 8 2004

OFFICE OF PETITIONS

In re Application of :
Abraham Bout, et al. :
Application No. 09/573,740 :
Filed: May 18, 000 :
Attorney Docket No. 4070.1US :

ON PETITION

This is a decision on the petition, filed September 30, 2004, under 37 CFR 1.313(c)(2) to withdraw the above-identified application from issue after payment of the issue fee.

The petition is **GRANTED**.

The above-identified application is withdrawn from issue for consideration of a submission under 37 CFR 1.114 (request for continued examination). See 37 CFR 1.313(c)(2).

Petitioner is advised that the issue fee paid on August 16, 2004 in the above-identified application cannot be refunded. If, however, the above-identified application is again allowed, petitioner may request that it be applied towards the issue fee required by the new Notice of Allowance. [1]

Telephone inquiries relating to this decision should be directed to the undersigned at (703) 305-9220.

The application is being referred to Technology Center AU 1635 for further processing of the request for continued examination under 37 CFR 1.114 filed September 30, 2004.

Sherry D. Brinkley
Petitions Examiner
Office of Petitions
Office of the Deputy Commissioner
for Patent Examination Policy

[1]The request to apply the issue fee to the new Notice may be satisfied by completing and returning the new Issue Fee Transmittal Form PTOL-85(b), which includes the following language thereon: "Commissioner for Patents is requested to apply the Issue Fee and Publication Fee (if any) or re-apply any previously paid issue fee to the application identified above." Petitioner is advised that, whether a fee is indicated as being due or not, the Issue Fee Transmittal Form **must** be completed and timely submitted to avoid abandonment. Note the language in bold text on the first page of the Notice of Allowance and Fee(s) Due (PTOL-85).

UNITED STATES PATENT AND TRADEMARK OFFICE

Commissioner for Patents
United States Patent and Trademark Office
P.O. Box 1450
Alexandria, VA 22313-1450
www.uspto.gov

CHRISTENSEN O'CONNOR JOHNSON KINDNESS
1420 FIFTH AVENUE, SUITE 2800
SEATTLE, WA 98101-2347

FAX RECEIVED
CANCELLED
FEB 08 2005

OFFICE OF PETITIONS

COPY MAILED
FEB 08 2005
OFFICE OF PETITIONS

In re Application of	:	
Gary S. Burd et al	:	
Application No. 09/573,769	:	ON PETITION
Filed: May 18, 2000	:	
Attorney Docket No.	:	
144237.1/40062.46US01		

This is a decision on the petition under 37 CFR 1.137(b), filed January 21, 2005, to revive the above-identified application.

The petition is **GRANTED**.

The above-identified application became abandoned for failure to submit the issue fee in a timely manner in reply to the Notice of Allowance mailed September 30, 2004, which set a statutory period for reply of three (3) months. Accordingly, the above-identified application became abandoned on December 31, 2004.

Telephone inquiries concerning this decision should be directed to Wan Laymon at (571) 272-3220.

This matter is being referred to Technology Center 2154.

Wan Laymon
Wan Laymon
Petitions Examiner
Office of Petitions
Office of the Deputy Commissioner
for Patent Examination Policy

UNITED STATES PATENT AND TRADEMARK OFFICE

COMMISSIONER FOR PATENTS
UNITED STATES PATENT AND TRADEMARK OFFICE
P.O. BOX 1450
ALEXANDRIA, VA 22313-1450
www.uspto.gov

MICROSOFT CORPORATION
ATTN: PATENT GROUP DOCKETING DEPARTMENT
ONE MICROSOFT WAY
REDMOND, WA 98052-6399

COPY MAILED

SEP 21 2005

OFFICE OF PETITIONS

In re Application of :
Gary S. Burd, et al. :
Application No. 09/573,769 : ON PETITION
Filed: May 18, 2000 :
Attorney Docket No.: MS 144237.1/40062.46US01:

This is a decision on the petition, filed December 28, 2005, under 37 CFR 1.313(a) to withdraw the above-identified application from issue.

37 CFR 1.313(a) states that an application may be withdrawn from issue for further action at the initiative the applicant provided a petition under this section is filed, including the fee set forth in 1.17(h) and a showing of good and sufficient reason why withdrawal of the application from issue is necessary.

Petitioners request that the application be withdrawn from issue to permit consideration of a request to correct inventorship in compliance with 37 CFR 1.48.

The petition is **DISMISSED AS MOOT**.

A review of the record discloses that petitioners' request to correct inventorship was granted in communication mailed by the examiner on September 15, 2005. Accordingly, withdrawal of the application from issue for this reason is unnecessary.

Telephone inquiries regarding this decision may be directed to the undersigned at (571) 272-3204.

The application is being referred to the Office of Publications for further processing.

Sherry D. Brinkley
Petitions Examiner
Office of Petitions

SPE RESPONSE FOR CERTIFICATE OF CORRECTION

DATE : 2/4/10 Paper No.: —

TO SPE OF : ART UNIT 2169

SUBJECT : Request for Certificate of Correction for Appl. No.: 9/573280 Patent No.: 7650355 B1

Please respond to this request for a certificate of correction within 7 days.

FOR IFW FILES:

Please review the requested changes/corrections as shown in the **COCIN** document(s) in the IFW application image. No new matter should be introduced, nor should the scope or meaning of the claims be changed.

Please complete the response (see below) and forward the completed response to scanning using document code **COCX**.

FOR PAPER FILES:

Please review the requested changes/corrections as shown in the attached certificate of correction. Please complete this form (see below) and forward it with the file to:

Certificates of Correction Branch (CofC)
Randolph Square – 9D10-A
Palm Location 7580

Virginia Tolbert
Certificates of Correction Branch
571-272-0460

Thank You For Your Assistance

The request for issuing the above-identified correction(s) is hereby:
Note your decision on the appropriate box.

- ☑ **Approved** — All changes apply.
- ☐ **Approved in Part** — Specify below which changes **do not** apply.
- ☐ **Denied** — State the reasons for denial below.

Comments: _____

2/25/10

PTOL-306 (REV. 7/03) U.S. DEPARTMENT OF COMMERCE Patent and Trademark Office

UNITED STATES PATENT AND TRADEMARK OFFICE

Commissioner for Patents
United States Patent and Trademark Office
P.O. Box 1450
Alexandria, VA 22313-1450
www.uspto.gov

HOGAN & HARTSON L.L.P.
1999 AVENUE OF THE STARS
SUITE 1400
LOS ANGELES CA 90067

COPY MAILED

SEP 21 2007

OFFICE OF PETITIONS

In re Patent No. 7,080,255 :
Issue Date: July 18, 2006 :
Application No. 09/573, 915 : ON PETITION
Filed: May 18, 2006 :
Attorney Docket No. 81800.0123 :

This is a decision on the petition filed July 17, 2007, which is being treated as a request under 37 CFR 3.81(b)[1] to correct the name of the assignee on the front page of the above-identified patent by way of a Certificate of Correction.

The request is **GRANTED**.

Telephone inquiries concerning this decision may be directed to the undersigned at (571) 272-3215. Inquiries regarding the issuance of a certificate of correction should be directed to the Certificate of Correction Branch at (571) 272-4200.

The Certificates of Correction Branch will be notified of this decision granting the petition under 37 CFR 3.81(b) and directing issuance of the requested Certificate of Correction.

Charlema Grant
Petitions Attorney
Office of Petitions

[1] *See* MPEP 1309, subsection II; and Official Gazette of June 22, 2004.

Laura Moskowitz
202-857-3224

09/574,012

SPE RESPONSE FOR CERTIFICATE OF CORRECTION

Paper No.: _____

DATE : 10/31/05

TO SPE OF : ART UNIT 2853

SUBJECT : Request for Certificate of Correction on Patent No.: 6,536,861

A response is requested with respect to the accompanying request for a certificate of correction.

Please complete this form and return with file, within 7 days to:
Certificates of Correction Branch - ~~PK 3-915~~ SOUTH TOWER 9A22
Palm location **7580** - Tel. No. 305-8309

With respect to the change(s) requested, correcting Office and/or Applicant's errors, should the patent read as shown in the certificate of correction? No new matter should be introduced, nor should the scope or meaning of the claims be changed.

Thank You For Your Assistance

Nonyma
Certificates of Correction Branch

The request for issuing the above-identified correction(s) is hereby:
Note your decision on the appropriate box.

- ☒ Approved — All changes apply.
- ☐ Approved in Part — Specify below which changes do not apply.
- ☐ Denied — State the reasons for denial below.

Comments:

Based upon accompanying petition to enter and on evidence of communication between Applicant and Examiner.

STEPHEN MEIER
SUPERVISORY PATENT EXAMINER
SPE

~~2814~~ 2853
Art Unit

PTOL-306 (REV. 7/03)

U.S. DEPARTMENT OF COMMERCE Patent and Trademark Office

BEST AVAILABLE COPY

UNITED STATES PATENT AND TRADEMARK OFFICE

Commissioner for Patents
United States Patent and Trademark Office
P.O. Box 1450
Alexandria, VA 22313-1450
www.uspto.gov

COPY MAILED
DEC 1 2 2006
OFFICE OF PETITIONS

SUGHRUE MION ZION MACPEAK & SEAS
2100 PENNSYLVANIA AVENUE NW
WASHINGTON DC 20037-3202

In re Application of	:	
Minoru Usui et al	:	
Application No. 09/574,015	:	ON PETITION
Filed: May 19, 2000	:	
Attorney Docket No. Q59278	:	

This is a decision on the petition, filed December 11, 2006, under 37 CFR 1.313(c)(2) to withdraw the above-identified application from issue after payment of the issue fee.

The petition is **GRANTED**.

The above-identified application is withdrawn from issue for consideration of a submission under 37 CFR 1.114 (request for continued examination). See 37 CFR 1.313(c)(2).

Petitioner is advised that the issue fee paid on November 14, 2006 in the above-identified application cannot be refunded. If, however, the above-identified application is again allowed, petitioner may request that it be applied towards the issue fee required by the new Notice of Allowance.[1]

Telephone inquiries should be directed to the undersigned at (571) 272-3208.

The examiner of Technology Center AU 2856 will consider the request for continued examination under 37 CFR 1.114.

Karen Creasy
Petitions Examiner
Office of Petitions

---

[1] The request to apply the issue fee to the new Notice may be satisfied by completing and returning the new Issue Fee Transmittal Form PTOL-85(b), which includes the following language thereon: "Commissioner for Patents is requested to apply the Issue Fee and Publication Fee (if any) or re-apply any previously paid issue fee to the application identified above." Petitioner is advised that, whether a fee is indicated as being due or not, the Issue Fee Transmittal Form **must** be completed and timely submitted to avoid abandonment. Note the language in bold text on the first page of the Notice of Allowance and Fee(s) Due (PTOL-85).

SPE RESPONSE FOR CERTIFICATE OF CORRECTION

Paper No.: —

DATE : 8/31/09

TO SPE OF : ART UNIT 2454

SUBJECT : Request for Certificate of Correction for Appl. No.: 9/574165 Patent No.: 7013340 B1

Please respond to this request for a certificate of correction within 7 days.

FOR IFW FILES:

Please review the requested changes/corrections as shown in the **COCIN** document(s) in the IFW application image. No new matter should be introduced, nor should the scope or meaning of the claims be changed.

Please complete the response (see below) and forward the completed response to scanning using document code **COCX**.

FOR PAPER FILES:

Please review the requested changes/corrections as shown in the attached certificate of correction. Please complete this form (see below) and forward it with the file to:

Certificates of Correction Branch (C of C)
Randolph Square 9D62-B
Palm Location 7580

Virginia Tolbert
Certificates of Correction Branch
703-756-1591

Thank You For Your Assistance

The request for issuing the above-identified correction(s) is hereby:
Note your decision on the appropriate box.

- [X] **Approved** — **All** changes apply.
- [ ] **Approved in Part** — Specify below which changes **do not** apply.
- [ ] **Denied** — State the reasons for denial below.

Comments: _____

/Nathan j. Flynn/
Nathan J. Flynn
SPE 2454

SPE **Art Unit**

UNITED STATES PATENT AND TRADEMARK OFFICE

COMMISSIONER FOR PATENTS
UNITED STATES PATENT AND TRADEMARK OFFICE
WASHINGTON, D.C. 20231
www.uspto.gov

Paper No. 13

ExxonMobil Chemical Company
Law Technology, PO Box 2149
Baytown, TX 77522-2149

COPY MAILED
SEP 1 2 2002
OFFICE OF PETITIONS

In re Application of
Paul K. Ladwig et al.
Application No. 09/574,261
Filed: May 19, 2000
Attorney Docket No. MAC-0015

ON PETITION

This is a decision on the petition under 37 CFR 1.137(b), filed August 29, 2002, to revive the above-identified application.

The petition is **GRANTED**.

The application became abandoned for failure to respond in a timely manner to the Non-Final Office action mailed October 3, 2001, which set a shortened statutory period of three months. No extensions of time under the provisions of 37 CFR 1.136(a) were obtained. Accordingly, the application became abandoned on January 4, 2002.

The file will be forwarded to Technology Center AU 1764 for further processing.

Telephone inquiries concerning this decision should be directed to Latrice Bond at (703) 308-6911.

Latrice Bond

Latrice Bond
Paralegal Specialist
Office of Petitions
Office of the Deputy Commissioner
for Patent Examinatin Policy

UNITED STATES PATENT AND TRADEMARK OFFICE

COMMISSIONER FOR PATENTS
UNITED STATES PATENT AND TRADEMARK OFFICE
WASHINGTON, D.C. 20231
www.uspto.gov
AMB 11-02

Paper No. 10

COPY MAILED

NOV 18 2002

OFFICE OF PETITIONS

Exxon Chemical Company
P O Box 2149
Baytown, TX 77522

In re Application of
Mohr, et al.
Application No. 09/574,432
Filed: May 20, 2000
Attorney Docket No. 99B014/2

ON PETITION

This is a decision on the petition under 37 CFR 1.137(b), filed October 7, 2002, to revive the above-identified application.

The petition is **DISMISSED**.

A grantable petition pursuant to 37 C.F.R. § 1.137(b) must be accompanied by: (1) the required reply to the outstanding Office action or notice, unless previously filed; (2) the petition fee as set forth in 37 C.F.R. § 1.17(m); (3) a statement that the entire delay in filing the required reply from the due date for the reply until the filing of a grantable petition pursuant to 37 C.F.R. § 1.137(b) was unintentional; and (4)any terminal disclaimer (and fee set forth in 37 C.F.R. § 1.20(d)) required pursuant to 37 C.F.R. § 1.137(c).

The fee payment referenced in the petition does not appear in the official application file. Payment of the petition fee for consideration under 37 CFR 1.137(b) is a prerequisite for treat on the merits of the instant petition. The Office will not reach the merits of any petition under 37 CFR 1.137(b) lacking the requisite fee.

Accordingly, the instant petition is **DISMISSED**.

Any renewed petition must be accompanied by the **required** petition fee.

Further correspondence with respect to this matter should be addressed as follows:

By mail: Commissioner for Patents
Box DAC
Washington, DC 20231

By facsimile: (703) 308-6916

By hand: Office of Petitions

2201 South Clark Place
Crystal Plaza 4, Suite 3C23
Arlington, VA 22202

Telephone inquiries concerning this matter may be directed to the undersigned at (703) 305-0310.

Alesia M. Brown
Petitions Attorney
Office of Petitions
Office of the Deputy Commissioner
for Patent Examination Policy

UNITED STATES PATENT AND TRADEMARK OFFICE

COMMISSIONER FOR PATENTS
UNITED STATES PATENT AND TRADEMARK OFFICE
WASHINGTON, D.C. 20231
www.uspto.gov
AMB 01-03

Paper No. 13

Exxon Chemical Company
P O Box 2149
Baytown, TX 77522

COPY MAILED

JAN 07 2003

OFFICE OF PETITIONS

In re Application of	:	
Mohr, et al.	:	
Application No. 09/574,432	:	ON PETITION
Filed: May 20, 2000	:	
Attorney Docket No. 99B014/2	:	

This is a decision on the renewed petition under 37 CFR 1.137(b), filed December 24, 2002, to revive the above-identified application.

The petition is **GRANTED**.

The application became abandoned December 11, 2001 for failure to timely submit a response to the non-final Office action mailed September 10, 2001. The non-final Office action set a three (3) month shortened statutory period of time for reply. No extensions of time in accordance with 37 CFR 1.136(a) were received. Notice of Abandonment was mailed April 8, 2002. A petition under 37 CFR 1.137(b) was filed October 7, 2002 and dismissed November 18, 2002.

This application is being forwarded to Technology Center 1700 for further processing.

Telephone inquiries concerning this matter may be directed to the undersigned at (703) 305-0310.

Alesia M. Brown
Petitions Attorney
Office of Petitions
Office of the Deputy Commissioner
for Patent Examination Policy

UNITED STATES PATENT AND TRADEMARK OFFICE

Commissioner for Patents
United States Patent and Trademark Office
P.O. Box 1450
Alexandria, VA 22313-1450
www.uspto.gov

Paper No. 24

Samuel B. Stone
Orrick Herrington & Sutcliffe
4 Park Plaza, Suite 1600
Irvine, Ca 92614-2558

COPY MAILED

OCT 2 2 2003

OFFICE OF PETITIONS

In re Application of :
J. Stuart Cumming :
Application No. 09/574,441 :
Filed: May 19, 2000 :
Attorney Docket No. 13533.4024 :

ON PETITION

This is a decision on the petition under 37 CFR 1.137(b), filed September 29, 2003, to revive the above-identified application.

The petition is GRANTED.

The above-identified application became abandoned for failure to reply within the meaning of 37 CFR 1.113 in a timely manner in reply to the final Office action mailed February 28, 2003, which set a shortened statutory period for reply of three months from the mail date of the Notice. A one (1) month extension of time under the provisions of 37 CFR 1.136 was submitted on June 30, 2003, via certificate of mailing on June 27, 2003. Accordingly, the application became on June 28, 2003.

An extension of time under 37 CFR 1.136 must be filed prior to the expiration of the maximum extendable period for reply. See In re Application of S., 8 USPQ2d 1630, 1631 (Comm'r Pats. 1988). Accordingly, since the $465 extension of time submitted with the petition on September 29, 2003 was subsequent to the maximum extendable period for reply, this fee is unnecessary and will be credited to petitioner's deposit account.

The application is being forwarded to Technology Center AU 3738 for processing the Request for Continued Examination under 37 CFR 1.114 filed with the instant petition.

Telephone inquiries concerning this decision should be directed to Latrice Bond at (703) 308-6911.

Latrice Bond

Latrice Bond
Paralegal Specialist
Office of Petitions
Office of the Deputy Commissioner
for Patent Examination Policy

UNITED STATES PATENT AND TRADEMARK OFFICE

Commissioner for Patents
United States Patent and Trademark Office
P.O. Box 1450
Alexandria, VA 22313-1450
www.uspto.gov

CHIEF PATENT COUNSEL
SMITH & NEPHEW, INC.
1450 BROOKS ROAD
MEMPHIS, TN 38116

COPY MAILED

JUN 28 2007

OFFICE OF PETITIONS

In re Application of	:
Roger J. Talish et al	:
Application No. 09/574,461	: DECISION GRANTING PETITION
Filed: May 18, 2000	: UNDER 37 CFR 1.313(c)(2)
Attorney Docket No. 601-61	:

This is a decision on the petition, filed June 21, 2007, under 37 CFR 1.313(c)(2) to withdraw the above-identified application from issue after payment of the issue fee.

The petition is **GRANTED**.

The above-identified application is withdrawn from issue for consideration of a submission under 37 CFR 1.114 (request for continued examination). See 37 CFR 1.313(c)(2).

Petitioner is advised that the issue fee paid on September 11, 2006 in the above-identified application cannot be refunded. If, however, the above-identified application is again allowed, petitioner may request that it be applied towards the issue fee required by the new Notice of Allowance.[1]

Telephone inquiries should be directed to the undersigned at (571) 272-3218.

This matter is being referred to Technology Center AU 3768 for processing of the request for continued examination under 37 CFR 1.114 and for consideration of the Information Disclosure Statement.

Frances Hicks
Petitions Examiner
Office of Petitions

C:\Documents and Settings\fhicks\My Documents\470\june10\574461.wpd

---

[1] *The request to apply the issue fee to the new Notice may be satisfied by completing and returning the new Part B – Fee(s) Transmittal Form (along with any balance due at the time of submission). Petitioner is advised that the Issue Fee Transmittal Form must be completed and timely submitted to avoid abandonment.*

UNITED STATES PATENT AND TRADEMARK OFFICE

UNDER SECRETARY OF COMMERCE FOR INTELLECTUAL PROPERTY AND
DIRECTOR OF THE UNITED STATES PATENT AND TRADEMARK OFFICE
WASHINGTON, DC 20231
www.uspto.gov

JAMES E. PARSONS
SKJERVEN MORRILL et al
25 METRO DRIVE, SUITE 700
SAN JOSE, CA 95110-1349

PATENT & TRADEMARK OFFICE

AUG 1 2 2001

LICENSING & REVIEW

In re:	SHIN et al	:	DECISION ON REQUEST
Serial No.:	09/574,541	:	UNDER 37 CFR 5.25
Filing date:	5/19/2000		
Docket No:	AB-975 US		

Title: SEMICONDUCTOR PACKAGE AND METHOD FOR FABRICATING THE SAME

In view of the communication(s) filed September 29, 2000, it has been determined that a retroactive license for foreign filing under 35 U.S.C. 184 be granted with respect to the filings listed below. The petition complies with 37 C.F.R. 5.25 in that there is an adequate showing that the subject matter in question was not under secrecy order, that the license was diligently sought after discovery of the proscribed foreign filing, and that the material was filed abroad without the required license under 37 C.F.R. 5.11 first having been obtained through error and without deceptive intent.

Country	**Date**
KOREA	May 20, 1999
KOREA	September 7, 1999
KOREA	September 7, 1999

Approved:

Ian J. Lobo
Patent Examiner
Group 3600
(703) 306-4161

UNITED STATES PATENT AND TRADEMARK OFFICE

UNITED STATES DEPARTMENT OF COMMERCE
United States Patent and Trademark Office
Address: COMMISSIONER FOR PATENTS
P.O. Box 1450
Alexandria, Virginia 22313-1450
www.uspto.gov

APPLICATION NO.	FILING DATE	FIRST NAMED INVENTOR	ATTORNEY DOCKET NO.	CONFIRMATION NO.
09/574,555	05/17/2000	Robert Rennard	59-027	7586

22898 7590 06/16/2010
LAW OFFICES OF MIKIO ISHIMARU
333 W. EL CAMINO REAL
SUITE 330
SUNNYVALE, CA 94087

EXAMINER
BEAULIEU, YONEL

ART UNIT	PAPER NUMBER
3661	

MAIL DATE	DELIVERY MODE
06/16/2010	PAPER

Please find below and/or attached an Office communication concerning this application or proceeding.

The time period for reply, if any, is set in the attached communication.

SPE RESPONSE FOR CERTIFICATE OF CORRECTION

Paper No.:20100614

DATE : June 15, 2010

TO SPE OF : ART UNIT 3661

SUBJECT : Request for Certificate of Correction on Patent No.: 6405123

A response is requested with respect to the accompanying request for a certificate of correction.

Please complete this form and return with file, within **7** days to:
Certificates of Correction Branch - PK 3-910
Palm location **7590** - Tel. No. 305-8201

With respect to the change(s) requested, correcting Office and/or Applicant's errors, should the patent read as shown in the certificate of correction? No new matter should be introduced, nor should the scope or meaning of the claims be changed.

Thank You For Your Assistance **Certificates of Correction Branch**

The request for issuing the above-identified correction(s) is hereby:
Note your decision on the appropriate box.

☒ **Approved** **All** changes apply.

☐ **Approved in Part** Specify below which changes **do not** apply.

☐ **Denied** State the reasons for denial below.

Comments:

SPE: /Thomas G. Black/ **Art Unit** 3661

UNITED STATES PATENT AND TRADEMARK OFFICE

Commissioner for Patents
United States Patent and Trademark Office
P.O. Box 1450
Alexandria, VA 22313-1450
www.uspto.gov

DLA PIPER US LLP
2000 UNIVERSITY AVENUE
E. PALO ALTO CA 94303-2248

COPY MAILED

MAY 1 2 2008

OFFICE OF PETITIONS

In re Application of	:	
McLean et al.	:	
Application No. 09/574,569	:	DECISION ON PETITION
Filed: May 17, 2000	:	
Attorney Docket No. 350725-991100	:	

This is a decision on the petition under the unintentional provisions of 37 CFR 1.137(b), filed April 1, 2008, to revive the above-identified application.

The petition is **GRANTED**.

This application became abandoned for failure to timely submit corrected formal drawings on or before February 21, 2008, as required by the Notice of Allowance and Fee(s) Due and the Notice of Allowability, mailed November 21, 2007. Accordingly, the date of abandonment of this application is February 22, 2007.

The petition satisfies the requirements of 37 CFR 1.137(b) in that petitioner has supplied (1) the reply in the form of corrected formal drawings , (2) the petition fee of $770; and (3) a proper statement of unintentional delay.

Telephone inquiries concerning this decision should be directed to Ramesh Krishnamurthy at (571) 272 - 4914.

This application is being referred to the Office of Data Management for processing into a patent.

Anthony Knight for
David Bucci
Petitions Examiner
Office of Petitions

UNITED STATES PATENT AND TRADEMARK OFFICE

COMMISSIONER FOR PATENTS
UNITED STATES PATENT AND TRADEMARK OFFICE
P.O. BOX 1450
ALEXANDRIA, VA 22313-1450
www.uspto.gov

APR 09 2004

Philips Intellectual Property & Standards
P.O. Box 3001
Briarcliff Manor, NY 10510

Paper No.

In re Application of Anthony Picardo et al Serial No. : 09/574,688 Filed : May 17, 2000 For : Smart Medical Connector System and Method of Use	DECISION ON PETITION TO WITHDRAW HOLDING OF ABANDONMENT

This is a decision on petitioner's request filed February 3, 2004, to review the holding of abandonment mailed January 7, 2004 for failure to respond to the Office action mailed June 26, 2003. There is no fee required for this petition.

In support of the request, petitioner has submitted a copy of a response to a restriction requirement, the response bearing a certificate of facsimile transmission dated July 15, 2003. Petitioner has also included a copy of the Auto-Reply Facsimile Transmission from the Patent Office confirming transmission of the papers in question on July 15, 2003, and a statement from the person who facsimiled the response attesting to the submission of the response.

In view of the above, the Notice of Abandonment mailed January 7, 2004 is in error and is hereby vacated. The holding of abandonment is withdrawn. Upon the mailing of this decision, the application will be forwarded to the Examiner via the Legal Instruments Examiner for entry and consideration of the response filed July 15, 2003.

Summary: Holding of Abandonment Withdrawn.

John E. Kittle, Director
Groups 3730 and 3760
Phone: (703) 308-0873

ak/3/30/04

UNITED STATES PATENT AND TRADEMARK OFFICE

Commissioner for Patents
United States Patent and Trademark Office
P.O. Box 1450
Alexandria, VA 22313-1450
www.uspto.gov

ISHIMARU & ZAHRT LLP
333 W. EL CAMINO REAL
SUITE 330
SUNNYVALE CA 94087

COPY MAILED
FEB 01 2007
OFFICE OF PETITIONS

In re Patent No. 6,434,221 :
Issue Date: August 13, 2002 :
Application No. 09/574,696 : NOTICE
Filed: May 17, 2000 :
Attorney Docket No. 21-001 :

This is a notice regarding your request for acceptance of a fee deficiency submission under 37 CFR 1.28. On September 1, 1998, the Court of Appeals for the Federal Circuit held that 37 CFR 1.28(c) is the sole provision governing the time for correction of the erroneous payment of the issue fee as a small entity. **See DH Technology v. Synergystex International, Inc. 154 F.3d 1333, 47 USPQ2d 1865 (Fed. Cir. Sept. 1, 1998).**

The Office no longer investigates or rejects original or reissue applications under 37 CFR 1.56. **1098 Off. Gaz. Pat. Office 502 (January 3, 1989)**. Therefore, nothing in this Notice is intended to imply that an investigation was done.

Your fee deficiency submission under 37 CFR 1.28 is hereby **ACCEPTED**. Deposit account no. 50-0374 will be charged $450.00.

This application is no longer entitled to small entity status. Accordingly, all future fees paid in this application must be paid at the large entity rate.

Inquiries related to this communication should be directed to the undersigned at (571) 272-3230.

Shirene Willis Brantley
Senior Petitions Attorney
Office of Petitions

UNITED STATES PATENT AND TRADEMARK OFFICE

Commissioner for Patents
United States Patent and Trademark Office
Washington, D.C. 20231
www.uspto.gov

Paper No. 7

Robert C. Strawbrich
c/o Skjerven, Morrill, MacPherson
Franklin & Friel, LLP
25 Metro Drive - Suite 700
San Jose, CA 95110

COPY MAILED

JUL 11 2001

OFFICE OF PETITIONS
A/C PATENTS

In re Application of
Branislav Petrovic
Application No. 09/574,707
Filed: May 18, 2000
Attorney Docket No. M-9522 US

ON PETITION

This is a decision on the petition under 37 CFR 1.137(b), filed June 11, 2001, to revive the above-identified application.

The petition is **GRANTED**.

The above-identified application became abandoned for failure to reply in a timely manner to the Notice to File Missing Parts of Application (Notice) mailed July 31, 2000. The Notice set a period for reply of two (2) months from the mail date of the Notice. No extensions of time under the provisions of 37 CFR 1.136(a) were obtained. Accordingly, the above-identified application became abandoned after midnight September 30, 2000.

37 CFR 1.137(b)(3) requires a statement that the entire delay in filing the required reply from the due date for the reply until the filing of a grantable petition pursuant to 37 CFR 1.137(b) was unintentional. Since the statement contained in the instant petition varies from the language required by 37 CFR 1.137(b)(3), the statement contained in the instant petition is being construed as the statement required by 37 CFR 1.137(b)(3) and petitioner must notify the Office if this is **not** a correct interpretation of the statement contained in the instant petition.

The application file is being forwarded to the Office of Initial Patent Examination for further processing.

Telephone inquiries concerning this decision should be directed to Andrea Coram at (703) 308-6711.

Andrea Coram
Petitions Examiner
Office of Petitions
Office of the Deputy Commissioner
for Patent Examination Policy

SPE RESPONSE FOR CERTIFICATE OF CORRECTION

Paper No.: _____

DATE : 11/29/2005

TO SPE OF : ART UNIT 2600(2674)

SUBJECT : Request for Certificate of Correction on Patent No.: 6,956,562

A response is requested with respect to the accompanying request for a certificate of correction.

Please complete this form and return with file, within **7** days to:
Certificates of Correction Branch - PK 3-922
Palm location **7580** - Tel. No. 305-8309

With respect to the change(s) requested, correcting Office and/or Applicant's errors, should the patent read as shown in the certificate of correction? No new matter should be introduced, nor should the scope or meaning of the claims be changed.

Okay for changes to claim 47 as requested in C of C?

Ernest C. White, LIE305-8339
Certificates of Correction Branch

Thank You For Your Assistance

The request for issuing the above-identified correction(s) is hereby:
Note your decision on the appropriate box.

- ☑ **Approved** — **All** changes apply.
- ☐ **Approved in Part** — Specify below which changes **do not** apply.
- ☐ **Denied** — State the reasons for denial below.

Comments:

Does not change scope of claim.

BIPIN SHALWALA
SUPERVISORY PATENT EXAMINER
TECHNOLOGY CENTER 2600
SPE

2629
Art Unit

PTOL-306 (REV. 7/03)

U.S. DEPARTMENT OF COMMERCE Patent and Trademark Office

Approved 8/1/06 AE

PTO/SB/44 (04-04)
Approved for use through 04/30/2007. OMB 0651-0033
Patent and Trademark Office: U.S. DEPARTMENT OF COMMERCE
Under the Paperwork Reduction Act of 1995, no persons are required to respond to a collection of information unless it displays a valid OMB control number.
(Also Form PTO-1050)

UNITED STATES PATENT AND TRADEMARK OFFICE
CERTIFICATE OF CORRECTION

PATENT NO : 6,956,562

DATED : October 18, 2005

INVENTOR(S): O'Hara et al.

It is certified that an error appears in the above-identified patent and that said Letters Patent are hereby corrected as shown below:

In the Claims:

Claim 47, column 6, line 63, "A handheld computer comprising:" should read -- A handheld computer configured for:--.

MAILING ADDRESS OF SENDER:
Hickman Palermo Truong & Becker LLP
2055 Gateway Place, Suite 550
San Jose, CA 95110

PATENT NO: 6,956,562

No. of additional copies

⇨ 1

The collection of information is required by 37 CFR 1.322, 1.323, and 1.324. The information is required to obtain or retain a benefit by the public which is to file (and by the USPTO to process) an application. Confidentiality is governed by 35 U.S.C. 122 and 37 CFR 1.14. This collection is estimated to take 1.0 hour to complete, including gathering, preparing, and submitting the completed application form to the USPTO. Time will vary depending upon the individual case. Any comments on the amount of time you require to complete this form and/or suggestions for reducing this burden, should be sent to the Chief Information Officer, U.S. Patent and Trademark Office, U.S. Department of Commerce, P.O. Box 1450, Alexandria, VA 22313-1450. DO NOT SEND FEES OR COMPLETE FORMS TO THIS ADDRESS. SEND TO: Attention Certificate of Corrections Branch, Commissioner for Patents, P.O. Box 1450, Alexandria, VA 22313-1450.

If you need assistance in completing the form, call 1-800-PTO-9199 and selection option 2.

UNITED STATES PATENT AND TRADEMARK OFFICE

Commissioner for Patents
United States Patent and Trademark Office
P.O. Box 1450
Alexandria, VA 22313-1450
www.uspto.gov

JOHN W. BRANCH
DARBY & DARBY, P.C.
P.O. BOX 770
CHURCH STREET STATION
NEW YORK, NY 10008-0770

MAILED

MAY 20 2009

OFFICE OF PETITIONS

In re Application of	:	
Plotnikov et al.	:	
Application No. 09/574738	:	
Filing or 371(c) Date: 05/17/2000	:	ON PETITION
Title of Invention:	:	
METHOD AND APPARATUS FOR	:	
ACCESSING A COMPUTER BEHIND	:	
A FIREWALL	:	

This is a decision on the petition under 37 CFR 1.137(a), filed December 11, 2008, to revive the above-identified application.

The petition is granted.

The above-identified application became abandoned for failure to timely and properly reply to the non-final Office action, mailed May 21, 2004. The Office action set a three (3) month period for reply from the mail date of the Office action. Extensions of time were available under 37 CFR 1.136(a). No reply having been received, the application became abandoned on August 22, 2004. A Notice of Abandonment was mailed December 14, 2004.

Applicant files the present petition and includes an Amendment in response to the Office action. The petition satisfies the conditions for revival pursuant to the provisions of 37 CFR 1.137(a) in that (1) the reply in the form of an Amendment; (2) the petition fee; and (3) the required showing of unavoidable delay. Accordingly, the reply is accepted as having been unavoidably delayed.

The application is being referred to Technology Center Art Unit 2132 for processing of the Amendment filed with the petition in due course.

Telephone inquiries concerning this decision should be directed to the undersigned at (571) 272-3232.

/Derek L. Woods/
Derek L. Woods
Attorney
Office of Petitions

UNITED STATES PATENT AND TRADEMARK OFFICE

Commissioner for Patents
United States Patent and Trademark Office
P.O. Box 1450
Alexandria, VA 22313-1450
www.uspto.gov

SAWYER LAW GROUP LLP
PO BOX 51418
PALO ALTO CA 94303

COPY MAILED

JUN 21 2007

OFFICE OF PETITIONS

In re Application of	:
Charles Barry et al	:
Application No. 09/574,745	: DECISION GRANTING PETITION
Filed: May 18, 2000	: UNDER 37 CFR 1.137(b)
Attorney Docket No. M8875/2666P	:

This is a decision on the petition under 37 CFR 1.137(b), filed March 1, 2007, to revive the above-identified application.

The petition is **GRANTED**.

The petition satisfies the conditions for revival pursuant to the provisions of 37 CFR 1.137(b) in that (1) the reply in the form of corrected drawings; (2) the petition fee; and (3) the required statement of unintentional delay have been received. Accordingly, the reply to the Notice of Allowability of August 8, 2005 and the Notice of January 24, 2006, is accepted as having been unintentionally delayed.

Telephone inquiries concerning this decision should be directed to the undersigned at (571) 272-3208.

This matter is being referred to Patent Publication and for review of the drawings filed March 1, 2007.

Karen Creasy

Karen Creasy
Petitions Examiner
Office of Petitions

SPE RESPONSE FOR CERTIFICATE OF CORRECTION 09574791

Paper No.: _____

DATE : 04/21/2006

TO SPE OF : ART UNIT 2600 (2616)

SUBJECT : Request for Certificate of Correction on Patent No.: ~~[illegible]~~ 6,956,989

A response is requested with respect to the accompanying request for a certificate of correction.

Please complete this form and return with file, within **7** days to:
Certificates of Correction Branch - PK 3-922
Palm location **7580** - Tel. No. 305-8309

With respect to the change(s) requested, correcting Office and/or Applicant's errors, should the patent read as shown in the certificate of correction? No new matter should be introduced, nor should the scope or meaning of the claims be changed.

Ok to enter data in item 56 as requested in C of C?

Ernest C. White, LIE305-8339
Certificates of Correction Branch

Thank You For Your Assistance

The request for issuing the above-identified correction(s) is hereby:
Note your decision on the appropriate box.

- ☑ **Approved** — All changes apply.
- ☐ **Approved in Part** — Specify below which changes **do not** apply.
- ☐ **Denied** — State the reasons for denial below.

Comments:

HUY D. VU
SUPERVISORY PATENT EXAMINER
TECHNOLOGY CENTER 2600
SPE

2616
Art Unit

PTOL-306 (REV. 7/03)

U.S. DEPARTMENT OF COMMERCE Patent and Trademark Office

UNITED STATES PATENT AND TRADEMARK OFFICE

Commissioner for Patents
United States Patent and Trademark Office
P.O. Box 1450
Alexandria, VA 22313-1450
www.uspto.gov

IP ADMINISTRATION, LEGAL DEPARTMENT, MS35
HEWLETT-PACKARD COMPANY
P.O. BOX 272400
FORT COLLINS CO 80527-2400

COPY MAILED

MAY 1 3 2005

OFFICE OF PETITIONS

In re Application of	:	
James M. Rehg et al	:	
Application No. 09/574,866	:	ON PETITION
Filed: May 19, 2000	:	
Attorney Docket No. 200308344-1	:	

This is a decision on the petition, filed May 12, 2005, under 37 CFR 1.313(c)(2) to withdraw the above-identified application from issue after payment of the issue fee.

The petition is **GRANTED**.

The above-identified application is withdrawn from issue for consideration of a submission under 37 CFR 1.114 (request for continued examination). See 37 CFR 1.313(c)(2).

Petitioner is advised that the issue fee paid on March 29, 2005 in the above-identified application cannot be refunded. If, however, the above-identified application is again allowed, petitioner may request that it be applied towards the issue fee required by the new Notice of Allowance.[1]

The instant petition under 37 CFR 1.313(c)(2), the RCE and the Drawings, filed on May 12, 2005, are not signed by an attorney of record. However, in accordance with 37 CFR 1.34(a), the signature of Caroline M. Fleming appearing on the correspondence shall constitute a representation to the United States Patent and Trademark Office that she is authorized to represent the particular party in whose behalf he act. However, if Ms. Fleming desires to receive correspondence regarding this file, the appropriate power of attorney documentation must be submitted. A

---

[1] The request to apply the issue fee to the new Notice may be satisfied by completing and returning the new Issue Fee Transmittal Form PTOL-85(b), which includes the following language thereon: "Commissioner for Patents is requested to apply the Issue Fee and Publication Fee (if any) or re-apply any previously paid issue fee to the application identified above." Petitioner is advised that, whether a fee is indicated as being due or not, the issue Fee Transmittal Form **must** be completed and timely submitted to avoid abandonment. Note the language in bold text on the first page of the Notice of Allowance and Fee(s) Due (PTOL-85).

courtesy copy of this decision is being mailed to Ms. Fleming, the petitioner herein. Until otherwise instructed, all future correspondence regarding this application file will be directed solely to the above-noted correspondence address of record.

Telephone inquiries should be directed to the undersigned at (571) 272-3208.

This matter is being referred to Technology Center Art Unit 2127 for processing of the request for continued examination under 37 CFR 1.114 filed May 12, 2005.

Karen Creasy

Karen Creasy
Petitions Examiner
Office of Petitions
Office of the Deputy Commissioner
for Patent Examination Policy

cc:
HAMILTON BROOK SMITH AND REYNOLDS
530 VIRGINIA ROAD, P.O. BOX 9133
CONCORD, MA 01450

UNITED STATES DEPARTMENT OF COMMERCE
Patent and Trademark Office
ASSISTANT SECRETARY AND COMMISSIONER OF
PATENTS AND TRADEMARKS
Washington, D.C. 20231

Paper No. 3

COPY MAILED

JUN 08 2000

SPECIAL PROGRAMS OFFICE
DAC FOR PATENTS

STRIKER, STRIKER & STENBY
103 EAST NECK ROAD
HUNTINGTON, NEW YORK 11743

In re Application of
Ali Bindernagel
Application No. 09/575,001
Filed: October 31, 1997

DECISION GRANTING PETITION

This is a decision on the petition filed October 4, 1999 to accord a filing date of October 31, 1997 in the above continuing application.

The petition is **granted** to the extent that the application will be accorded a filing date of November 3, 1997, the date of receipt in the Patent and Trademark Office.

Telephone inquiries concerning this matter should be directed to the Karen Creasy at (703) 305-8859.

The application file is being forwarded to Initial Patent Examination. Thereafter, the file will be forwarded to Technology Center 3200 for further processing under 1.62(g).

Brian Hearn
Special Projects Examiner
Office of Petitions
Office of the Deputy Assistant Commissioner
for Patent Policy and Projects

UNITED STATES PATENT AND TRADEMARK OFFICE

Commissioner for Patents
United States Patent and Trademark Office
Washington, D.C. 20231
www.uspto.gov

Paper No. 6

COPY MAILED

APR 19 2001

OFFICE OF PETITIONS
A/C PATENTS

STRIKER STRIKER & STENBY
103 EAST NECK ROAD
HUNTINGTON , NY 11743

In re Application of :
Bindernagel, et al. :
Application No. 09/575,001 :
Filed: November 3, 1997 :
Title of Invention: :
ARRANGEMENT FOR INCLINED :
ROLLING OF TUBE-SHAPED OR BAR :
SHAPED ROLLING PRODUCTS :

DECISION ON PETITION

This is a decision on the Petition filed January 26, 2001, under 37 CFR 1.53, requesting that the above-identified application be accorded a filing date.

This Petition is hereby **granted**.

The application, a continuation application filed under 37 CFR 1.62, was mailed to this office on October 31, 1997, but was not processed. Subsequently, on October 4, 1999, a Petition to Accord Continuation Patent Application a Filing Date, was filed. That Petition was granted by this Office in a Decision mailed on June 8, 2000, the filing date being the date the application papers were received by this Office.

Subsequent to the Decision granting the Petition, on September 5, 2000, the Initial Patent Examination Division mailed a Notice of Incomplete Nonprovisional Application (hereinafter "Notice"), requiring a specification and at least one claim, and stating that the filing date of the application would be the date of receipt of the specification and claim.

Petitioner responded with the instant Petition, requesting withdrawal of the Notice. In support, petitioner correctly avers that the continuation application was filed under 37 CFR 1.62, as such, no specification is required. The Notice was mailed in error and is vacated.

No fee is required and none has been charged.

The application will be forwarded to the Initial Patent Examination Division for further processing as a **continuation application under 37 CFR 1.62, with a filing date of November 3, 1997**.

Telephone inquiries concerning this matter should be directed to Petitions Attorney Derek L. Woods at (703) 305-0014.

Beverly M. Flanagan
Supervisory Petitions Examiner
Office of Petitions
Office of the Deputy Commissioner
for Patent Examination Policy

UNITED STATES PATENT AND TRADEMARK OFFICE

Commissioner for Patents
United States Patent and Trademark Office
P.O. Box 1450
Alexandria, VA 22313-1450
www.uspto.gov

MORRISON & FOERSTER LLP
3811 VALLEY CENTRE DRIVE, SUITE 500
SAN DIEGO, CA 92130-2332

COPY MAILED

DEC 15 2004

OFFICE OF PETITIONS

In re Application of	:	
Babu J. Mavunkel et al	:	
Application No. 09/575,060	:	NOTICE
Filed: May 19, 2000	:	
Attorney Docket No. 21900-20290.00	:	

This is a notice regarding your request for acceptance of a fee deficiency submission under 37 CFR 1.28. On September 1, 1998, the Court of Appeals for the Federal Circuit held that 37 CFR 1.28(c) is the sole provision governing the time for correction of the erroneous payment of the issue fee as a small entity. **See DH Technology v. Synergystex International, Inc. 154 F.3d 1333, 47 USPQ2d 1865 (Fed. Cir. Sept. 1, 1998).**

The Office no longer investigates or rejects original or reissue applications under 37 CFR 1.56. **1098 Off. Gaz. Pat. Office 502 (January 3, 1989).** Therefore, nothing in this Notice is intended to imply that an investigation was done.

Your fee deficiency submission under 37 CFR 1.28 is hereby **ACCEPTED.**

This application no longer qualifies for small entity status. Accordingly, all future fees must be paid at the large entity rate.

Inquiries related to this communication should be directed to the undersigned at (571) 272-3218.

Frances Hicks

Frances Hicks
Petitions Examiner
Office of Petitions
Office of the Deputy Commissioner
for Patent Examination Policy

UNITED STATES PATENT AND TRADEMARK OFFICE

Commissioner for Patents
United States Patent and Trademark Office
P.O. Box 1450
Alexandria, VA 22313-1450
www.uspto.gov

TOWNSEND AND TOWNSEND AND CREW LLP
TWO EMBARCADERO CENTER, EIGHTH FLOOR
SAN FRANCISCO, CA 94111-3834

COPY MAILED

JUN 28 2005

OFFICE OF PETITIONS

In re Application of	:	
Stephan R. Targan et al	:	
Application No. 09/575,061	:	DECISION GRANTING PETITION
Filed: May 19, 2000	:	UNDER 37 CFR 1.137(b)
Attorney Docket No. P-PM 4097	:	

This is a decision on the petition under 37 CFR 1.137(b), filed February 8, 2005, to revive the above-identified application.

The petition is **GRANTED**.

The petition satisfies the conditions for revival pursuant to the provisions of 37 CFR 1.137(b) in that (1) the reply in the form of a Request for Continued Examination (RCE); (2) the petition fee of $750; and (3) the required statement of unintentional delay have been received. Accordingly, the reply to the final Office action of April 19, 2004 is accepted as having been unintentionally delayed.

It is not apparent whether petitioner herein was in a position to have firsthand or direct knowledge of the facts and circumstances of the delay at issue, since petitioner was not an attorney of record at the time the application became abandoned. Nevertheless, such statement is being treated as having been made as the result of a reasonable inquiry into the facts and circumstances of such delay. See 37 CFR 10.18(b) and Changes to Patent Practice and Procedure; Final Rule Notice, 62 Fed. Reg. 53131, 53178 (October 10, 1997), 1203 Off. Gaz. Pat. Office 63, 103 (October 21, 1997). In the event that such an inquiry has not been made, petitioner must make such an inquiry. If such inquiry results in the discovery that it is not correct that the entire delay in filing the required reply from the due date for the reply until the filing of a grantable petition pursuant to 37 CFR 1.137(b) was unintentional, petitioner must notify the Office.

An extension of time under 37 CFR 1.136 must be filed prior to the expiration of the maximum extendable period for reply. See In re Application of S., 8 USPQ2d 1630, 1631 (Comm'r Pats. 1988). Accordingly, since the $60 extension of time fee submitted with the

petition on February 8, 2005 was subsequent to the maximum extendable period for reply, this fee is unnecessary and will be credited to petitioner's deposit account.

Telephone inquiries concerning this decision should be directed to the undersigned at (571) 272-3218.

The application file is being forwarded to Technology Center AU 1641 for processing the RCE and for such further action as the nature of the case requires.

Frances Hicks
Petitions Examiner
Office of Petitions

UNITED STATES PATENT AND TRADEMARK OFFICE

COMMISSIONER FOR PATENTS
UNITED STATES PATENT AND TRADEMARK OFFICE
P.O. BOX 1450
ALEXANDRIA, VA 22313-1450
www.uspto.gov

Paper No. 6

MAIL

MAY 12 2004

DIRECTOR OFFICE
TECHNOLOGY CENTER 2600

SILVERBROOK RESEARCH PTY LTD
393 DARLING STREET
BALMAIN 2041 AU AUSTRALIA

In re Application of:
Paul Lapstun, et al.
Application No. 09/575,109
Filed: May 23, 2000
For: PRINTED PAGE TAG ENCODER

DECISION
ON PETITION

This is a response to the request for withdrawal of the Notice of Abandonment, filed March 9, 2004 which is treated as a petition to Withdraw the Holding of Abandonment, no fee is required pursuant to 37 C.F.R. § 1.181.

This application was held abandoned for failure to respond to the Office Action mailed on July 7, 2003. A Notice of Abandonment was mailed February 24, 2004.

Petitioner alleges to have timely filed a response by facsimile transmission to the Office Action on October 7, 2003. Petitioner provided with the petition, copies of a Facsimile Transmission Report, a Facsimile Transmittal Form, and a copy of the alleged timely Response.

37 C.F.R. § 1.8(b) states that in the event that correspondence is considered timely filed by being mailed or transmitted in accordance with paragraph (a) of this section, but not received in the Patent and Trademark Office, and the application is held to be abandoned or the proceeding dismissed, terminated, or decided with prejudice, the correspondence will be considered timely if the party who forwarded such correspondence:

(1) Informs the Office of the previous mailing or transmission of the correspondence promptly after becoming aware that the Office has no evidence of receipt of the correspondence,

(2) Supplies an additional copy of the previously mailed or transmitted correspondence and certificate, and

(3) Includes a statement which attests on a personal knowledge basis or to the satisfaction of the Commissioner to the previous timely mailing or transmission. If the correspondence was sent by facsimile transmission, a copy of the sending unit's report confirming transmission may be used to support this statement. [emphasis added]

Although the petition lacked a personal statement by Simon Robert Walmsley or Paul Lapstun, i.e., the individuals that signed the certification of transmission, Petitioner does provide a copy of the facsimile transmittal report which confirms transmission to a U.S. Patent and Trademark Office facsimile number.

Accordingly, the petition is **Granted**. The Notice of Abandonment is vacated and the holding of abandonment withdrawn.

The application will be forwarded to the Technology Center's technical support staff for entry of petition the response. From there, the file will be forwarded to the examiner for consideration in due course.

Dwayne D. Bost
Special Program Examiner
Technology Center 2600
Communications

UNITED STATES PATENT AND TRADEMARK OFFICE

COMMISSIONER FOR PATENTS
UNITED STATES PATENT AND TRADEMARK OFFICE
P.O. BOX 1450
ALEXANDRIA, VA 22313-1450
www.uspto.gov

Paper No. 6
MAIL

MAY 1 2 2004

DIRECTOR OFFICE
TECHNOLOGY CENTER 2600

SILVERBROOK RESEARCH PTY LTD
393 DARLING STREET
BALMAIN 2041 AU AUSTRALIA

In re Application of:
Robert Simon Walmsley
Application No. 09/575,110
Filed: May 23, 2000
For: PRINT ENGINE/CONTROLLER WITH COLOR MASK

DECISION
ON PETITION

This is a response to the request for withdrawal of the Notice of Abandonment, filed March 9, 2004 which is treated as a petition to Withdraw the Holding of Abandonment, no fee is required pursuant to 37 C.F.R. § 1.181.

This application was held abandoned for failure to respond to the Office Action mailed on July 7, 2003. A Notice of Abandonment was mailed February 24, 2004.

Petitioner alleges to have timely filed a response by facsimile transmission to the Office Action on October 7, 2003. In support this position, Petitioner provides with the petition, copies of a Facsimile Transmission Report, a Facsimile Transmittal Form, and a copy of the alleged timely Response.

37 C.F.R. § 1.8(b) states that in the event that correspondence is considered timely filed by being mailed or transmitted in accordance with paragraph (a) of this section, but not received in the Patent and Trademark Office, and the application is held to be abandoned or the proceeding dismissed, terminated, or decided with prejudice, the correspondence will be considered timely if the party who forwarded such correspondence:

(1) Informs the Office of the previous mailing or transmission of the correspondence promptly after becoming aware that the Office has no evidence of receipt of the correspondence,

(2) Supplies an additional copy of the previously mailed or transmitted correspondence and certificate, and

(3) Includes a statement which attests on a personal knowledge basis or to the satisfaction of the Commissioner to the previous timely mailing or transmission. If the correspondence was sent by facsimile transmission, a copy of the sending unit's report confirming transmission may be used to support this statement. [emphasis added]

The petition has not included a statement from Simon Robert Walmsley attesting on a personal knowledge basis to the previous timely mailing or transmission on October 7, 2003. However, petitioner does provide a copy of the facsimile transmittal report which confirms transmission to a U.S. Patent and Trademark Office facsimile number, signed by Simon Robert Walmsley.

Accordingly, the petition is **Granted**. The Notice of Abandonment is vacated and the holding of abandonment withdrawn.

The application will be forwarded to the Technology Center's technical support staff for entry of petition the response. From there, the file will be forwarded to the examiner for consideration in due course.

Dwayne D. Bost
Special Program Examiner
Technology Center 2600
Communications

UNITED STATES PATENT AND TRADEMARK OFFICE

COMMISSIONER FOR PATENTS
UNITED STATES PATENT AND TRADEMARK OFFICE
WASHINGTON, DC 20231
www.uspto.gov

MAIL

Paper No. 10

KIA SILVERBROOK
SILVERBROOK RESEARCH
393 DARLING ST. BALMAIN
NSW 2041 AUSTRALIA

APR 1 4 2003

DIRECTOR OFFICE
TECHNOLOGY CENTER 2600

In re Application of:
Kia Silverbrook et al
Application No. 09/575, 116
Filed: May 23, 2000
For: **METHOD AND SYSTEM FOR DELIVERY OF A GREETING CARD**

DECISION ON PETITION TO MAKE SPECIAL

This is a decision on the petition to make special filed on May 23, 2000, under MPEP 708.02 V: Environmental Quality and MPEP 708.02 VI: Energy.

A petition to make special under the Manual of Patent Examination Procedure (hereinafter "M.P.E.P.") §708.02 V must be accompanied by a statement by a registered practitioner, assignee, or applicant explaining how the invention materially enhances the quality of the environment of mankind by contributing to the restoration or maintenance of the basic life-sustaining natural elements, i.e., air, water, and soil. A petition to make special under M.P.E.P. §708.02 VI must be accompanied by a statement explaining how the invention materially contributes to the discovery or development of energy resources or the more efficient utilization and conservation of energy resources. No fee is required.

The petition was accompanied by a declaration by applicant explaining how the claimed invention for delivering of a greeting card via a computer system would conserve energy sources and maintains natural elements by ***potentially*** reducing the use of paper. These statements do not explain how the specific invention ***directly*** contributes to the restoration, maintenance, development, conservation, and more efficient utilization of the basic life-sustaining natural elements and energy sources as required.

Accordingly, the petition is **DENIED.**

Should petitioner desire reconsideration, he/she should supplement this petition by a declaration or statement giving the information as outlined above. Any request for reconsideration must be filed within **TWO MONTHS** of the date of this decision.

The application file is being forwarded to the Technology Center's Central Files area to await examination in due course.

Krista Zele
Special Program Examiner
Technology Center 2600
Communications
(703) 305-4701

UNITED STATES PATENT AND TRADEMARK OFFICE

Commissioner for Patents
United States Patent and Trademark Office
P.O. Box 1450
Alexandria, VA 22313-1450
www.uspto.gov

Paper No. 7

SILVERBROOK RESEARCH PTY LTD
393 DARLING STREET
BALMAIN NSW 2-041 AU AUSTRALIA

COPY MAILED

FEB 17 2006

OFFICE OF PETITIONS

ON PETITION

In re Application of :
Simon Robert Walmsley :
Application No. 09/575,120 :
Filed: May 23, 2000 :
Attorney Docket No. PP16US

This is a decision on the petition under 37 CFR 1.181(a) to withdraw the holding of abandonment, filed November 23, 2005.

The petition under 37 CFR 1.181(a) to withdraw the holding of abandonment is **granted**.

The above-identified application became abandoned for failure to reply to the non-final Office action mailed July 1, 2003, which set a shortened statutory period for reply of three-months from its mailing date. No response was received within the allowable period, and the application became abandoned on October 2, 2003. A Notice of Abandonment was mailed on February 24, 2005.

Petitioner argues that a reply the non-final Office action was transmitted via facsimile on September 25, 2003, and received by the Office. As evidence of the same, petitioner provides a copy of the certificate of transmittal under 37 CFR 1.8 noting that a response was sent on August 25, 2005, and a copy of the transmission sheet indicating that 7 pages were transmitted to a USPTO facsimile.

Based on the aforementioned, it appears that the application was improperly held abandoned as a proper response was transmitted prior to expiration of the statutory period for reply. The holding of abandonment is withdrawn, accordingly.

The application file is being forwarded Technology Center 2600, GAU 2622, for further processing.

Kenya A. McLaughlin

Kenya A. McLaughlin
Petitions Attorney
Office of Petitions

UNITED STATES PATENT AND TRADEMARK OFFICE

Commissioner for Patents
United States Patent and Trademark Office
Washington, D.C. 20231
www.uspto.gov

Paper No. 6

MAIL

JUN 14 2001

DIRECTOR OFFICE
TECHNOLOGY CENTER 2600

SILVERBROOK RESEARCH PTY LTD
393 DARLING STREET
BALMAIN, AUX 2041

In re Application of
Paul Lapstun et al.
Application No. 09/575,131
Filed: May 23, 2000
For: METHOD AND SYSTEM FOR DELIVERY OF MAIL

DECISION ON PETITION
TO MAKE SPECIAL

This is a decision on the petition filed May 23, 2000, to make the above-identified application special pursuant to M.P.E.P. § 708.02 (V) and (VI).

In accordance with M.P.E.P. § 708.02, Item V, an application may be granted special status provided that the invention materially enhances the quality of the environment of mankind by contributing to the restoration or maintenance of the basic life-sustaining natural elements, i.e., air, water, and soil.

As well, in accordance with M.P.E.P. § 708.02, Item VI, an application may be granted special status provided that the invention materially contributes to (A) the discovery or development of energy resources, or (B) the more efficient utilization and conservation of energy resources. Examples of inventions in category (A) would be developments in fossil fuels (natural gas, coal, and petroleum), nuclear energy, solar energy, etc. Category (B) would include inventions relating to the reduction of energy consumption in combustion systems, industrial equipment, household appliances, etc.

A petition to accord "special" status requires a statement under 37 CFR 1.102 by the applicant, assignee, or an attorney/agent registered to practice before the PTO explaining how in this case (1) the inventions contribute to the restoration or maintenance of one of these life-sustaining elements and (2) explaining how the invention materially contributes to category (A) or (B) set forth in Item VI above. No fee is required for these such petitions, 37 CFR 1.102(c).

For the above stated reasons, the petition is **GRANTED**.

The application will retain its special status throughout its entire course of prosecution in the Patent and Trademark Office, including appeal, if any to the Board of Patent Appeals and Interferences, subject only to diligent prosecution by the applicant.

The application file will be forwarded to the examiner for expedited prosecution.

Kenneth A. Wieder
Special Program Examiner
Technology Center 2600
Communications
(703) 305-4710

UNITED STATES PATENT AND TRADEMARK OFFICE

COMMISSIONER FOR PATENTS
UNITED STATES PATENT AND TRADEMARK OFFICE
P.O. BOX 1450
ALEXANDRIA, VA 22313-1450
www.uspto.gov

MAIL Paper No. 8

OCT 15 2004

DIRECTOR OFFICE
TECHNOLOGY CENTER 2600

SILVERBROOK RESEARCH PTY LTD
393 DARLING STREET
BALMAIN 2041 AU AUSTRALIA

In re Application of:
Kia Silverbrook, et al.
Application No. 09/575,134
Filed: May 23, 2000
For: EFFECTS MODULE FOR COMPACT PRINTER SYSTEM

DECISION ON PETITION

This is a decision on the petition, filed on May 18, 2004 which is treated as a Petition to Withdraw the Holding of Abandonment pursuant to MPEP §711.03 and 37 C.F.R. §1.181(a). No fee is required.

*The petition is **granted**.*

This application became abandoned for failure to timely file a response to the Office action mailed July 3, 2003, which set a shortened statutory period of three (3) months to reply. A Notice of Abandonment was mailed on April 7, 2004.

Petitioner alleges to have timely filed a proper response to the Office action mailed July 30, 2003. In support, petitioner has provided as evidence, a copy of the response to said Office action, a transmittal letter which referenced the response and which included a Certificate of Facsimile Transmission report dated September 9, 2003. Also included with the response is a copy of a Facsimile Transmission Report indicating that an 11-page document from Petitioner was transmitted to the U.S. Patent and Trademark Office on September 8, 2003.

37 C.F.R. § 1.8 Certificate of mailing or transmission states in part:
(a) Except in the cases enumerated in paragraph (a)(2) of this section, correspondence required to be filed in the Patent and Trademark Office within a set period of time will be considered as being timely filed if the procedure described in this section is followed. The actual date of receipt will be used for all other purposes.
(1) Correspondence will be considered as being timely filed if:
(i) The correspondence is mailed or transmitted prior to expiration of the set period of time by being:
(A) Addressed as set out in § 1.1(a) and deposited with the U.S. Postal Service with sufficient postage as first class mail; or
(B) Transmitted by facsimile to the Patent and Trademark Office in accordance with § 1.6(d); and
(ii) The correspondence includes a certificate for each piece of correspondence stating the date of deposit or transmission. The person signing the certificate should have reasonable basis to expect that the correspondence would be mailed or transmitted on or before the date indicated. [emphasis added]

Petitioner is also the one who executed the certificate of transmission, thus satisfying the personal statement requirement. Although the telephone number used to transmit the response was not an official Office facsimile number for submission of communications, the facsimile number was provided to Applicants by the examiner within the Office action mailed July 30, 2003. Accordingly, it is deemed that the original response was transmitted to the Office and subsequently misplaced.

The Notice of Abandonment is vacated and the holding of abandonment withdrawn.

The application file is being forwarded to the technical support staff for entry of the copy of the original response filed via facsimile transmission, and from there will be forwarded to the Examiner for appropriate action in due course.

For future reference, Applicants might want to note that all future facsimile transmissions to the Office should be to the Official Fax number for the entire Patent and Trademark Office (i.e., 703-872-9306).

Dwayne D. Bost
Special Program Examiner
Technology Center 2600
Communications

UNITED STATES PATENT AND TRADEMARK OFFICE

Commissioner for Patents
United States Patent and Trademark Office
Washington, D.C. 20231
www.uspto.gov

Paper No. MAIL

MAY 1 8 2001

DIRECTOR OFFICE
TECHNOLOGY CENTER 2600

SILVERBROOK RESEARCH PTY LTD
393 DARLING STREET
BALMAIN, AUX 2041

In re Application of
Paul Lapstun et al.
Application No. 09/575, 139
Filed: May 23, 2000
For: METHOD AND SYSTEM FOR DELIVERY OF A FACSIMILE

DECISION ON PETITION TO MAKE SPECIAL

This is a decision on the petition filed May 23, 2000, to make the above-identified application special pursuant to M.P.E.P. § 708.02 (V) and (VI).

In accordance with M.P.E.P. § 708.02, Item V, an application may be granted special status provided that the invention materially enhances the quality of the environment of mankind by contributing to the restoration or maintenance of the basic life-sustaining natural elements, i.e., air, water, and soil.

As well, in accordance with M.P.E.P. § 708.02, Item VI, an application may be granted special status provided that the invention materially contributes to (A) the discovery or development of energy resources, or (B) the more efficient utilization and conservation of energy resources. Examples of inventions in category (A) would be developments in fossil fuels (natural gas, coal, and petroleum), nuclear energy, solar energy, etc. Category (B) would include inventions relating to the reduction of energy consumption in combustion systems, industrial equipment, household appliances, etc.

A petition to accord "special" status requires a statement under 37 CFR 1.102 by the applicant, assignee, or an attorney/agent registered to practice before the PTO explaining how in this case (1) the inventions contribute to the restoration or maintenance of one of these life-sustaining elements and (2) explaining how the invention materially contributes to category (A) or (B) set forth in Item VI above. No fee is required for these such petitions, 37 CFR 1.102(c).

For the above stated reasons, the petition is **GRANTED**.

The application will retain its special status throughout its entire course of prosecution in the Patent and Trademark Office, including appeal, if any to the Board of Patent Appeals and Interferences, subject only to diligent prosecution by the applicant.

The application file will be forwarded to the examiner for expedited prosecution.

Kenneth A. Wieder
Special Program Examiner
Technology Center 2600
Communications
(703) 305-4710

UNITED STATES PATENT AND TRADEMARK OFFICE

Commissioner for Patents
United States Patent and Trademark Office
P.O. Box 1450
Alexandria, VA 22313-1450
www.uspto.gov

SILVERBROOK RESEARCH PTY LTD
393 DARLING STREET
BALMAIN 2041
AUSTRALIA

COPY MAILED

MAR 2 2 2005

OFFICE OF PETITIONS

In re Application of	:	
Lapstun et al.	:	
Application No. 09/575,139	:	ON PETITION
Filed: May 23, 2000	:	
Attorney Docket No. NPA019US	:	

This is a decision on the petition under 37 C.F.R. § 1.137(b), filed March 14, 2005, to revive the above-identified application.

The petition is **GRANTED.**

This application became abandoned for failure to timely reply to the final Office action mailed July 28, 2003. A two-month extension of time under the provisions of 37 CFR 1.136(a) was obtained. Accordingly, this application became abandoned on December 29, 2003. A Notice of Abandonment was mailed February 11, 2005.

Petitioner has met the requirements to revive the above-identified application pursuant to 37 CFR 1.137(b).

This matter is being referred to Technology Center 2600 for processing of the Request for Continued Examination under 37 CFR 1.114 filed with the instant petition.

Telephone inquiries regarding this decision should be directed to the undersigned at (571) 272-3282.

Liana Chase
Petitions Examiner
Office of Petitions
Office of the Deputy Commissioner
for Patent Examination Policy

#2

In the United States Patent and Trademark Office

Docket Number: NPA035 US

Application Filed: May 23, 2000

Applicant Name: Silverbrook Research Pty. Ltd.

Title: Method and System for Printing a Photograph

RECEIVED
MAR 3 0 2004
DIRECTOR OFFICE
TECHNOLOGY CENTER 2000

Petition to Make Special

Assistant Commisioner for Patents
Washington, District of Columbia 20231

Sir,

Applicant hereby respectfully petitions that the above application be made special under MPEP Sec. 708.02 for the following reasons; attached is a declaration in support thereof:

V. Environmental Quality Will Be Enhanced

VI. Energy Savings Will Result

Very respectfully,

Kia Silverbrook

Silverbrook Research
393 Darling St. Balmain
NSW 2041 Australia

Ph. +61 2 9818 6633
email: kia@silverbrook.com.au

In the United States Patent and Trademark Office

Docket Number: NPA035US
Application filed: 23 May 2000
Applicant: Silverbrook Research

Declaration in Support of Accompanying Petition to Make Special

In support of the accompanying Petition to Make Special, applicant declares as follows:
1. Silverbrook Research is the applicant in the above identified patent application.
2. The present invention is part of a multi-facetted effort to develop a new form of information distribution. The system, collectively called "Netpage", has the potential to substantially reduce energy use, transportation requirements, and paper use, giving environmental benefits such as reduction of carbon emissions, maintenance of biodiversity, and a reduction in pollution. These benefits fall under two reasons to make special under MPEP Sec. 708.02, as explained below.

Reason V – Enhancement of Environmental Quality

Netpage can significantly reduce the use of paper in many industries. Some examples are:

- Approximately 40% of all magazines printed remain unsold or are otherwise junked before they reach a reader. This inefficiency in inherent in the 'print and distribute' system that must be used by commercial printers due to the current absence of a viable digital home magazine printing technology. Most magazines also have many more pages than are likely to be read. Netpage allows only those pages which are of interest to the reader to be printed. This number of pages will vary from reader to reader, but may be around one quarter as many as are in current magazines. Thus, if Netpage is used for magazine distribution, the paper use may be reduced by around 90%.
- Newspapers – In 1986, US newspapers used 13 million tons of paper. A substantial majority of newspaper pages go unread, as they are not printed selectively for each reader. A customized newspaper need only have a small fraction of the pages of a traditional newspaper, and can therefore use proportionally less paper.
- Direct mail – the typical response rate for direct mail such as brochures and catalogs is around 2%. This means that 98% of all of the paper used in direct mail is wasted. Studies have shown that by targeting direct mail only to those who are in the appropriate demographic, the amount of paper use can be reduced to around 10% of a 'scattershot' approach. Netpage uses extensive demographic interest profiles to allow efficient delivery of direct mail to only those people who are likely to be interested.
- Netpage prints on both sides of the page simultaneously. This almost halves the amount of paper used compared to single sided printing, as is typically used with computer printers.

Reason VI – Energy Savings

The energy savings from a reduction in paper use are substantial. The primary energy cost of manufacturing paper in 1998 was around 17.8 gigaJoules per tonne [1]. Using this figure, the 13 million tons of paper used by US newspapers in 1986 would have required around 230 petaJoules to manufacture. This is equal to a continuous consumption of 7.4 gigaWatts over the year.
If the amount of paper in those newspapers was halved by using the Netpage system disclosed herein, the power savings in the US would be around 3.7 gigaWatts, equal to the output of about four full scale nuclear, coal, or natural gas electricity generating plants.
Similar energy savings can be achieved for magazines, direct mail, and other printed media.

Netpage can also operate as a 'web browser' using the interactive paper technology developed as part of this project. Most of the everyday functions of current computer based web browsers can be achieved using interactive paper, reducing the need for personal computers to operate as browsers.

The Memjet™ printing technology invented for this project has an energy consumption of around 120 nanoJoules per printed drop, compared with several microJoules per drop for thermal inkjet technologies. This dramatic reduction in energy allows a Netpage printer to consume typically less than 50 Joules to print a full color double sided sheet of paper. Unlike a computer screen, once the page is printed, there is no further energy consumption to keep the images displayed.
The Netpage printer goes into 'sleep' mode when not printing, with very low power consumption.

By comparison, estimates of the annual energy use of a household personal computer range from 130 to 262 kilowatt-hours (468 to 943 megaJoules) per year [2]. This is sufficient energy for a Netpage printer to print around 24 million pages.

However, a PC based web browser does not require sheets of paper to operate. For a balanced comparison with PCs, the energy cost of manufacturing this paper must be taken into account. An energy cost of 17.8 gigaJoules per tonne of paper equates to 53.69 kiloJoules per letter sized 50 GSM sheet. Including the 50 Joules required for a Netpage printer to print the sheet results in a total of 53.74 kiloJoules.

A magazine-quality double-sided sheet of paper can display around 10 computer screens worth of information. The time taken for someone to read 10 screens of information is approximately 10 minutes. A typical desktop personal computer consumes around 200 Watts, so 10 minutes operation results in an energy consumption of 120 kiloJoules. Therefore, the energy cost of both manufacturing the paper sheet and printing it may be around half the energy used in reading the equivalent information on a computer screen.

As computers currently consume around 2% of the entire US electricity supply [2], and as internet access is a major and growing application of computers, substantial energy savings are possible by replacing the PC with more energy efficient means of internet access.

[1] Paper Federation of Great Britain

[2] Statement of Jay E. Hakes, Administrator, Energy Information Administration, Department of Energy, before the Subcommittee on National Economic Growth, Natural Resources, and Regulatory Affairs, Committee on Government Reform, United States House of Representatives, February 2, 2000

I further declare that all statements made herein of my own knowledge are true and that all statements made upon information and belief are believed to be true, and further that these statements were made with the knowledge that willful false statements and the like so made are punishable by fine or imprisonment, or both, under Section 1001 of Title 18 of the United States Code, and that such willful false statements may jeopardize the validity of the application and any patent issuing therefrom.

Very respectfully,

Kia Silverbrook

Silverbrook Research
393 Darling St
Balmain NSW 2041
Australia

UNITED STATES PATENT AND TRADEMARK OFFICE

COMMISSIONER FOR PATENTS
UNITED STATES PATENT AND TRADEMARK OFFICE
P.O. BOX 1450
ALEXANDRIA, VA 22313-1450
www.uspto.gov

Paper No. 5

MAIL

JUL - 7 2004

DIRECTOR OFFICE
TECHNOLOGY CENTER 2600

SILVERBROOK RESEARCH PTY LTD
393 DARLING STREET
BALMAIN 2041 AU AUSTRALIA

In re Application of
Paul Lapstun, et al
Application No. 09/575,145
Filed: May 23, 2000
For: METHOD AND SYSTEM FOR PRINTING A PHOTOGRAPH

DECISION ON PETITIONS TO MAKE SPECIAL

This is a decision on the petition under 37 C.F.R. § 1.102, filed May 23, 2000, to make the above-identified application special.

Petitioner requests that the above-identified application be made special under the accelerated examination procedure set forth in M.P.E.P. § 708.02, Section V: Environment and Section VI: Energy.

A grantable petition to make an application special under 37 C.F.R. § 1.102 and in accordance with M.P.E.P. § 708.02, Section V, for an invention which materially enhances the quality of the environment of mankind by contributing to the restoration or maintenance of the basic life-sustaining elements - air, water and soil, must be accompanied by statements under 37 C.F.R. § 1.102 by the applicant or his/her attorney or agent explaining how the invention contributes to the restoration or maintenance of one of these life sustaining elements; and Section VI, must be accompanied by a showing that the application is for an invention which materially contributes to (A) the discovery or development of energy resources, or (B) the more efficient utilization and conservation of energy resources. Examples of inventions in category (A) would be developments in fossil fuels (natural gas, coal, and petroleum), nuclear energy, solar energy, etc. Category (B) would include inventions relating to the reduction of energy consumption in combustion systems, industrial equipment, household appliances etc. Such petitions should be accompanied by statements under 37 C.F.R. § 1.102 by the applicant, assignee, or an attorney/agent registered to practice before the Office explaining how the invention materially contributes to category (A) or (B) set forth above.

The petition was accompanied by the following statement by applicant: "The system, collectively called "Netpage", has the potential to substantially reduce energy use, transportation requirements, and paper use, giving environmental benefits such as reduction of carbon emissions, maintenance of biodiversity, and a reduction in pollution".

While Applicant's invention may potentially result in environmentally sound practices, no evidence has been provided whereby the invention directly contributes to the restoration or maintenance of the basic-life sustaining natural elements, as required by special status, section V.

Similarly, no evidence has been presented which demonstrates the direct correlation between the use of Applicant's invention and the conservation of resources. Petitioner alleges that "If the amount of paper in those newspapers was halved by using the Netpage system disclosed herein, the power savings in the US would be around 3.7 gigaWatts, equal to the output of about four full scale nuclear, coal, or natural gas electricity generating plants". Petitioner's statements are based upon supposition regarding implementation and/or utilization. No evidence has been provided which demonstrates the direct correlation between use of the claimed system and reduction of energy consumption. In other words, if Applicant's invention were implemented, there is no evidence that paper usage would actually decrease. Petitioner's statements of reduction of energy consumption is based upon a supposition.

For the above stated reasons, the petition to make the subject application special is **DENIED**.

Should Petitioner desire reconsideration, he/she should supplement this petition by a declaration or statement giving the information as outlined above. Any request for reconsideration must filed within TWO MONTHS of the date of this decision.

Alternatively, Petitioner may also consider requesting special status under MPEP 708.02, section VIII.

The application will be forwarded to the examiner for consideration of the application's priority on their docket and await action in its regular turn.

Dwayne D. Bost
Special Program Examiner
Technology Center 2600
Communications

UNITED STATES PATENT AND TRADEMARK OFFICE

COMMISSIONER FOR PATENTS
UNITED STATES PATENT AND TRADEMARK OFFICE
WASHINGTON, D.C. 20231
www.uspto.gov

Paper No. 4

KIA SILVERBROOK
SILVERBROOK RESEARCH
393 DARLING ST. BALMAIN
NSW 2041 AUSTRALIA

MAIL

MAR 2 6 2001

DIRECTOR OFFICE
TECHNOLOGY CENTER 2600

In re Application of:
Kia Silverbrook, et al
Application No.: 09/575,148
Filed: May 23, 2000
For: METHOD AND SYSTEM FOR DELIVERY OF A BROCHURE

DECISION ON PETITION TO MAKE SPECIAL

This is a decision on the petition, filed May 4, 2000, under 37 C.F.R. § 1.102(c) and M.P.E.P. 708.02(V) and (VI): Environmental Quality and Energy, respectively, to make the above-identified application special.

A grantable petition under 37 C.F.R. § 1.102(c), M.P.E.P. § 708.02, Section V, must be accompanied by a statement under 37 C.F.R. § 1.102 by the applicant, assignee, or an attorney/agent registered to practice before the Patent and Trademark Office explaining how the invention materially contributes to the restoration or maintenance of the basic life-sustaining natural elements. No fee for such a petition is required.

A grantable petition under 37 C.F.R. § 1.102(c), M.P.E.P. § 708.02, Section VI, must be accompanied by a statement under 37 C.F.R. § 1.102 by the applicant, assignee, or an attorney/agent registered to practice before the Patent and Trademark Office explaining how the invention materially contributes to (a) the discovery or development of energy resources or (b) the more efficient utilization and conservation of energy resources. No fee for such a petition is required.

The petition does not include statements *from the applicant, assignee, or attorney/agent registered to practice before the Patent and Trademark Office* ***explaining how the invention directly contributes the restoration or maintenance of the basic life-sustaining natural elements; and how the invention contrtbutes to the discovery or development of energy sources or the more efficient utilization and conservation of energy sources.*** The statements made by the applicant are speculative assertions as to how the application would conserve energy sources and maintain natural elements by ***potentially*** reducing the use of paper. These statements do not explain how the specific invention ***directly*** contributes to the restoration, maintenance, development, conservation, and more efficient utilization of the basic life-sustaining natural elements and energy sources as required.

The petition is **DENIED.**

Should petitioner desire reconsideration, he/she should supplement this petition by a declaration or statement giving the information as outlined above. Any request for reconsideration must be filed within **TWO MONTHS** of the date of this decision.

The application file is being forwarded to the Technology Center's Central Files area to await examination in due course.

Kenneth A. Wieder
Special Program Examiner
Technology Center 2600
Communications
(703) 305-4710

UNITED STATES PATENT AND TRADEMARK OFFICE

Commissioner for Patents
United States Patent and Trademark Office
P.O. Box 1450
Alexandria, VA 22313-1450
www.uspto.gov

Paper No. 012405

Kia Silverbrook
Silverbrook Research Pty Ltd
393 Darling Street
Balmain AU AUSTRALIA

AIRMAIL

FEB 3 2005

In re Application of:
LAPSTUN *et al.*
Serial No.: 09/575,154
Filed: May 23, 2000
Attorney Docket No.: **NPT001US**

DECISION ON PETITION TO WITHDRAW HOLDING OF ABANDONMENT

This is a response to the communication filed on March 08, 2004, that is being treated as a petition to withdraw the holding of abandonment in the above-identified application.

The petition is granted to the extent that the proposed after final amendment has been considered but denied as to withdrawal of the holding of abandonment.

This application became abandoned for failure to timely respond to the final Office action mailed July 03, 2003.

The petitioner asserts that a timely response was sent via facsimile on September 03, 2003. To support this assertion, petitioner has provided a copy of a response including an amendment to the specification and claims, a copy of the facsimile confirmation sheet from petitioner's machine and a Certificate of Facsimile Transmission dated September 03,2003.

The petition meets the conditions to establish timeliness under 37 CFR § 1.8(b) in that (1) the Office was promptly informed of the previous timely mailing, (2) a copy of the previously mailed correspondence with certificate of mailing thereon has been supplied, and (3) the petition includes a statement which attests on a personal knowledge basis of the previous timely mailing or transmission.

It is hereby accepted that a response to the Office action of July 03, 2003, was timely mailed but lost after being deposited with the USPS. Accordingly, the proposed after final amendment has been forwarded to the examiner for consideration.

Consideration of proposed after final amendments are addressed in 37 CFR § 1.113, 37 CFR §1.116, and MPEP 714.13 reproduced, in part, below:

37 CFR § 1.113 (c) states, in part, the following:

"(c) reply to a final rejection or action must include cancellation of or appeal from the rejection of, each rejected claim. If any claim stands allowed, the reply to a final rejection or action must comply with any requirements or objections as to form."

37 CFR § 1.116 (b) and (c) state, in part, the following:

"(b) ... amendments may be made canceling claims or complying with any requirement of form expressly set forth in a previous Office action. Amendments presenting rejected claims in better form for consideration on appeal may be admitted. The admission of, or refusal to admit, and amendment after a final rejection, a final action, an action closing prosecution, or any related proceedings will not operate to relieve the application or patent under reexamination from its condition as subject to appeal or to save the application from abandonment..."

"(c) If amendments touching the merits of the application or patent under reexamination are presented after final rejection, or after appeal has been taken, or when such amendment might not otherwise be proper, they may be admitted upon a showing of good and sufficient reasons why they are necessary and were not earlier presented."

Section 714.13 of the MPEP states, in part, the following:

"An amendment filed at any time after final rejection but before an appeal brief is filed, may be entered upon or after filing of an appeal brief provided the total effect of the amendment is to (A) remove issues for appeal, and/or (B) adopt examiner suggestions."

* * *

"It should be noted that under 37 CFR 1.181(f), the filing of a 37 CFR 1.181 petition will not stay the period for reply to an examiner's action which may be running against an application. See MPEP § 1207 for appeal and post-appeal procedure."

Under current practice, the proposed after final amendment would be entered if it *prima facie* placed the application in condition for allowance. The examiner, after consideration of the proposed after final amendment has determined that the proposed amendment did not *prima facie* place the application in condition for allowance for the reasons set forth in the Advisory Action mailed concurrently herewith.

In view of the above stated reasons, the application remains abandoned and the petition to withdraw the holding of abandonment for the above-identified application is denied.

Any request for reconsideration must be filed within TWO MONTHS of the date of this decision.

Petitioner may wish to consider filing a petition under 37 CFR 1.137(a) or (b) requesting that the application be revived.

Inquiries regarding this decision should be directed to Clayton E. LaBalle at (571) 272-1594.

Janice A. Falcone, Director
Technology Center 2800
Semiconductors, Electrical and Optical
Systems and Components

UNITED STATES PATENT AND TRADEMARK OFFICE

Commissioner for Patents
United States Patent and Trademark Office
P.O. Box 1450
Alexandria, VA 22313-1450
www.uspto.gov

Kia Silverbrook
Silverbrook Research Pty Ltd
393 Darling Street
Balmain AU AUSTRALIA

COPY MAILED

MAR 2 8 2005

OFFICE OF PETITIONS

In re Application of :
Lapstun, et al. :
Application No. 09/575,154 : ON PETITION
Filed: may 23, 2000 :
Attorney Docket No. NPT001US :

This is a decision on the petition under 37 CFR 1.137(a), filed March 11, 2005, to revive the above-identified application.

The petition is **GRANTED.**

The above-cited application became abandoned for failure to file a timely and proper response to the final office action mailed July 3, 2003. The final Office action set a shortened statutory period for reply of three months from its mailing date. No response was believed to have been received within the allowable period, and the application became abandoned on October 4, 2003. A Notice of Abandonment was mailed on February 24, 2004.

The record reflects that a petition to withdraw the holding of abandonment was filed on March 8, 2004, asserting that an amendment responsive to the final Office action was filed on September 3, 2003, via facsimile. A certificate of transmission, pursuant to 37 CFR 1.8, accompanied the petition. The petition was dismissed by a decision mailed February 8, 2005, because the amendment failed to place the application in condition for allowance. It is noted that petitioner relies, in part, on the decision of February 8, 2005, in making the instant argument that the abandonment of the application was unavoidable. Accordingly, for purposes of the record, it is important to note that the Director of Technology Center 2800 erred in indicating that the evidence supported petitioner's contention that alleged reply of September 3, 2003, was lost after being deposited with the United States Postal Service. In fact, record demonstrates that the amendment was filed via facsimile as the petition to withdraw the holding of abandonment was accompanied by a certificate of transmission indicating that the amendment was transmitted via facsimile on September 3, 2003, not by mail.

Based on the evidence presented and the papers filed on March 8, 2005, it is believed that the abandonment of the application was unavoidable as a response was filed via facsimile, on September 3, 2003, but subsequently lost by the Patent and Trademark Office.

The Request for Continued Examination, filed March 11, 2005, is noted and made of record.

The application is being directed to Technology Center 2800, GAU 2876 for further processing.

Telephone inquiries concerning this matter may be directed to the undersigned at (571) 272-3222.

Kenya A. McLaughlin

Kenya A. McLaughlin
Petitions Attorney
Office of Petitions

UNITED STATES PATENT AND TRADEMARK OFFICE

COMMISSIONER FOR PATENT
UNITED STATES PATENT AND TRADEMARK OFFIC
WASHINGTON, D.C. 20231
www.uspto.go

MAILED

MAR 31 2003

Technology Center 2100

Paper No. 5

Silverbrook Research Pty. LTD
393 Darling Street
Balmain, New South Wales 2041
AUSTRALIA

In re Application of: Kia Silverbrook et al.	)	DECISION ON PETITION TO MAKE
Application No. 09/575,159	)	SPECIAL UNDER 37 C.F.R. §1.102(c)
Filed: May 23, 2000	)	AND MPEP § 708.02 (V) AND (VI):
For: METHOD AND SYSTEM FOR	)	ENVIRONMENTAL QUALITY AND
PROVIDING INFORMATION IN A	)	ENERGY
DOCUMENT	)	

This is a decision on the petition, filed March 12, 2003 under 37 C.F.R. §1.102(c) and M.P.E.P. §708.02(V): Environmental Quality, and M.P.E.P. §708.02(VI): Energy, to make the above-identified application special.

The Petition is **DISMISSED**.

I. Environmental Quality

A grantable petition under 37 C.F.R. §1.102(c), and M.P.E.P. §708.02, Section V, must be accompanied by the showing that the application is for an invention which will materially enhance the quality of the environment of mankind by contributing to the restoration or maintenance of the basic life-sustaining natural elements, i.e., air, water, and soil. A petition under M.P.E.P. § 708.02, Section V, should be accompanied by statements under 37 C.F.R. §1.102 by the applicant or assignee or statements by an attorney/agent registered to practice before the Patent and Trademark Office explaining how the invention materially contributes to the restoration or maintenance of one of these life-sustaining elements. No fee for such a petition is required. (See 37 C.F.R. §1.102(c) and M.P.E.P. §708.02(V))

Applicants state that their invention, "a new form of information distribution" will reduce paper use and transportation thus resulting in reduction of carbon emissions and pollution.

The relevant portion of 37 C.F.R. §1.102(c) states: ".. or that the invention will materially enhance the quality of the environment". That is, the invention must have a substantial direct impact on the quality of the environment.

Applicant's showing does not establish that the application is for an invention which will materially enhance the quality of the environment of mankind by contributing to the restoration or maintenance

of the basic life-sustaining natural elements, i.e., air, water, and soil. The invention as characterized by applicant is directed to an *information distribution system*. In particular, this application is directed to customizing the content of advertising based on demographics. A byproduct of this system is the possible reduction in the use of paper by substituting web-based advertising for direct mail advertising. Should paper use go down, the environmental and energy costs of paper production and disposal would be reduced. This incidental byproduct is not adequate to meet the requirement of the section cited above.

II. Energy

A grantable petition under 37 C.F.R. §1.102(c), and M.P.E.P. §708.02, Section VI, must be accompanied by the showing that the application is for an invention which will materially contribute to the development or conservation of energy resources. A petition under M.P.E.P. § 708.02, Section V, should be accompanied by statements under 37 C.F.R. §1.102 by the applicant or assignee or statements by an attorney/agent registered to practice before the Patent and Trademark Office explaining how the invention materially contributes to the development or conservation of energy resources. No fee for such a petition is required. (See 37 C.F.R. §1.102(c) and M.P.E.P. §708.02(V))

Applicant's representation of the reduced (per/printed drop) energy consumption of the Memjet™ printing technology as compared to inkjet technology would meet the standard for a grantable petition under this section. However, the claimed invention is directed to a security protocol for authorizing printing of a publication at a printer, not to the printing technology.

Accordingly, the Petition is **DISMISSED**. The application file is being forwarded to Central Files to await examination in its proper turn based on its effective filing date.

If the petitioner desires further review of this Decision, applicant should consider filing a Request for Reconsideration within 2 months of the mailing date of this Decision.

Pinchus M. Laufer
Special Programs Examiner
Technology Center 2100
Computer Architecture, Software, and Information Security
(703) 306-4160

SPE RESPONSE FOR CERTIFICATE OF CORRECTION

Paper No.: _____

DATE : 1/31/05

TO SPE OF : ART UNIT 2130

SUBJECT : Request for Certificate of Correction on Patent No.: 6,822,639

A response is requested with respect to the accompanying request for a certificate of correction.

Please complete this form and return with file, within **7** days to:
Certificates of Correction Branch - PK 3-915
Palm location **7580** - Tel. No. 305-8309

With respect to the change(s) requested, correcting Office and/or Applicant's errors, should the patent read as shown in the certificate of correction? No new matter should be introduced, nor should the scope or meaning of the claims be changed.

Thank You For Your Assistance

Certificates of Correction Branch

The request for issuing the above-identified correction(s) is hereby:
Note your decision on the appropriate box.

- ☐ **Approved** — All changes apply.
- ☐ **Approved in Part** — Specify below which changes **do not** apply.
- ☐ **Denied** — State the reasons for denial below.

Comments:

_____

_____

_____

_____

_____

SPE _____ **Art Unit** _____

SPE RESPONSE FOR CERTIFICATE OF CORRECTION

Paper No.: _____

DATE : 1/31/05

TO SPE OF : ART UNIT 2130

SUBJECT : Request for Certificate of Correction on Patent No.: 6,822,639

A response is requested with respect to the accompanying request for a certificate of correction.

Please complete this form and return with file, within 7 days to:
Certificates of Correction Branch - PK 3-915
Palm location **7580** - Tel. No. 305-8309

With respect to the change(s) requested, correcting Office and/or Applicant's errors, should the patent read as shown in the certificate of correction? No new matter should be introduced, nor should the scope or meaning of the claims be changed.

ARG

Certificates of Correction Branch

Thank You For Your Assistance

The request for issuing the above-identified correction(s) is hereby:
Note your decision on the appropriate box.

- ☐ **Approved** — All changes apply.
- ☑ **Approved in Part** — Specify below which changes do not apply.
- ☐ **Denied** — State the reasons for denial below.

Comments:

6,315,699 is not an assignment to Silverbrook Research PTY LTD:

6,315,699 should be 6,315,399

11/27/2005

BIPIN SHALWALA
SPE
SUPERVISORY PATENT EXAMINER
TECHNOLOGY CENTER 2600

Art Unit

U.S. DEPARTMENT OF COMMERCE Patent and Trademark Off

PTOL-306 (REV. 7/03)