UNITED STATES PATENT AND TRADEMARK OFFICE

Commissioner for Patents
United States Patent and Trademark Office
P.O. Box 1450
Alexandria, VA 22313-1450
www.uspto.gov

JUL 14 2005

BROWDY AND NEIMARK, P.L.L.C.
624 NINTH STREET, NW
SUITE 300
WASHINGTON DC 20001-5303

In re Application of	:
Daniel Zagury et al	:
Serial No.: 09/763,369	: SUSPENSION OF ACTION
Filed: May 22, 2001	:
Attorney Docket No.: ZAGURY3A	:

This is in reply to the petition under 37 CFR 1.103 to suspend action on this application at applicant's request for a period of three months, filed June 15, 2005.

A review of the file history shows that applicants replied to the non-Final Office action mailed December 16, 2004, on June 15, 2005, including a request and fee for a three month extension of time. Applicants request that action on this application be suspended for three months in order to comply with the examiner's suggestions discussed at a personal interview held on May 4, 2005, and which may show the unexpected properties looked for by the examiner.

§ 1.103 Suspension of action by the Office.

(a) Suspension for cause . On request of the applicant, the Office may grant a suspension of action by the Office under this paragraph for good and sufficient cause. The Office will not suspend action if a reply by applicant to an Office action is outstanding. Any petition for suspension of action under this paragraph must specify a period of suspension not exceeding six months. Any petition for suspension of action under this paragraph must also include:
(1) A showing of good and sufficient cause for suspension of action; and
(2) The fee set forth in § 1.17(g), unless such cause is the fault of the Office.

Applicants' petition states that they are presently conducting experiments in order to comply with the examiner's suggestions noted above. Applicants indicate that insufficient time remained in the response period in order to complete the experiments and data analysis.

In view of the above reason the petition is **GRANTED for three months from the date of mailing of this decision, as requested.**

The petition fee paid of $130.00 was insufficient. The correct petition fee is $200.00 and the difference will be charged to applicants' Deposit Account No. 02-4035, as directed.

Should there be any questions with respect to this action, please contact William R. Dixon, Jr., by mail addressed to: Director, Technology Center 1600, P. O. BOX 1450, ALEXANDRIA, VA 22313-1450, or by telephone at 571-272-0519 or by facsimile transmission at the Office general facsimile number, 571-273-8300.

George C. Elliott
Director, Technology Center 1600

UNITED STATES PATENT AND TRADEMARK OFFICE

COMMISSIONER FOR PATENTS
UNITED STATES PATENT AND TRADEMARK OFFICE
P.O. BOX 1450
ALEXANDRIA, VA 22313-1450
www.uspto.gov

APR - 6 2004

BROWDY AND NEIMARK, P.L.L.C.
624 NINTH STREET, NW
SUITE 300
WASHINGTON DC 20001-5303

In re Application of	:
Falk Fish	:
Serial No.: 09/763,415	: PETITION DECISION
Filed: May 16, 2001	:
Attorney Docket No.: FISH-4	:

This is in response to the petition under 37 CFR 1.181, filed September 30, 2003, for withdrawal of abandonment of the above identified application based on filing of a timely reply.

A review of the file history shows that the examiner mailed a Final Office action to applicant on March 20, 2003, setting a three month shortened statutory period for reply. Applicants replied with an amendment on July 21, 2003, including a one month extension of time (refaxed on August 19, 2003). The amendment did not place the application in condition for allowance and an Advisory action was prepared, but never mailed to applicant (a copy is enclosed with this decision). A Notice of Abandonment was mailed to applicant on September 16, 2003, when no further reply was filed. This Notice was mailed prematurely – one week before abandonment occurred by action of law. Applicant filed RCE papers on September 22, 2003, accompanied by a further two month extension of time request and fee and the RCE filing fee. The reply has now been located and placed in the file. In view of the Office error and timely reply the Notice of Abandonment was mailed in error and is withdrawn and the application is restored to pending status with the mailing of this decision.

However, applicant's request for refund of the second and third month extension of time fees is not approved. Refund of such fees would only be approved if the reply to the Final Office action were filed within two months of the mail date thereof. Request for patent term adjustment is premature as the application has not been found allowable.

The petition is **GRANTED**.

The application will be forwarded for entry of the RCE papers and then to the examiner for further action.

Should there be any questions about this decision please contact William R. Dixon, Jr., by letter addressed to Director, TC 1600, at the address listed above, or by telephone at 703-308-3824 or by facsimile sent to the general Office facsimile number 703-872-9306.

Bruce M. Kisliuk
Director, Technology Center 1600

Advisory Action	Application No.	Applicant(s)	
	09/763,415	FISH, FALK	
	Examiner	Art Unit	
	Ja-Na A Hines	1645	

--The MAILING DATE of this communicati n appears on the cover sheet with the c rrespondence address --

THE REPLY FILED 19 August 2003 FAILS TO PLACE THIS APPLICATION IN CONDITION FOR ALLOWANCE. Therefore, further action by the applicant is required to avoid abandonment of this application. A proper reply to a final rejection under 37 CFR 1.113 may only be either: (1) a timely filed amendment which places the application in condition for allowance; (2) a timely filed Notice of Appeal (with appeal fee); or (3) a timely filed Request for Continued Examination (RCE) in compliance with 37 CFR 1.114.

PERIOD FOR REPLY [check either a) or b)]

a) ☒ The period for reply expires 4 months from the mailing date of the final rejection.

b) ☐ The period for reply expires on: (1) the mailing date of this Advisory Action, or (2) the date set forth in the final rejection, whichever is later. In no event, however, will the statutory period for reply expire later than SIX MONTHS from the mailing date of the final rejection. ONLY CHECK THIS BOX WHEN THE FIRST REPLY WAS FILED WITHIN TWO MONTHS OF THE FINAL REJECTION. See MPEP 706.07(f).

Extensions of time may be obtained under 37 CFR 1.136(a). The date on which the petition under 37 CFR 1.136(a) and the appropriate extension fee have been filed is the date for purposes of determining the period of extension and the corresponding amount of the fee. The appropriate extension fee under 37 CFR 1.17(a) is calculated from: (1) the expiration date of the shortened statutory period for reply originally set in the final Office action; or (2) as set forth in (b) above, if checked. Any reply received by the Office later than three months after the mailing date of the final rejection, even if timely filed, may reduce any earned patent term adjustment. See 37 CFR 1.704(b).

1.☐ A Notice of Appeal was filed on _____. Appellant's Brief must be filed within the period set forth in 37 CFR 1.192(a), or any extension thereof (37 CFR 1.191(d)), to avoid dismissal of the appeal.

2.☒ The proposed amendment(s) will not be entered because:

(a) ☒ they raise new issues that would require further consideration and/or search (see NOTE below);

(b) ☐ they raise the issue of new matter (see Note below);

(c) ☒ they are not deemed to place the application in better form for appeal by materially reducing or simplifying the issues for appeal; and/or

(d) ☐ they present additional claims without canceling a corresponding number of finally rejected claims.

NOTE: *See Continuation Sheet*.

3.☐ Applicant's reply has overcome the following rejection(s): _____.

4.☐ Newly proposed or amended claim(s) _____ would be allowable if submitted in a separate, timely filed amendment canceling the non-allowable claim(s).

5.☐ The a)☐ affidavit, b)☐ exhibit, or c)☐ request for reconsideration has been considered but does NOT place the application in condition for allowance because: _____.

6.☐ The affidavit or exhibit will NOT be considered because it is not directed SOLELY to issues which were newly raised by the Examiner in the final rejection.

7.☐ For purposes of Appeal, the proposed amendment(s) a)☐ will not be entered or b)☐ will be entered and an explanation of how the new or amended claims would be rejected is provided below or appended.

The status of the claim(s) is (or will be) as follows:

Claim(s) allowed: *None*.

Claim(s) objected to: *None*.

Claim(s) rejected: *1-12*.

Claim(s) withdrawn from consideration: _____.

8.☐ The proposed drawing correction filed on _____ is a)☐ approved or b)☐ disapproved by the Examiner.

9.☐ Note the attached Information Disclosure Statement(s)(PTO-1449) Paper No(s). _____.

10.☐ Other: _____

Continuation of 2. NOTE: The after final amendment will not be entered because it raises issues that require further search and consideration. Originally the claims were drawn to a method for determining the level of an analyte; and now the claims are drawn to determining the level of glucose. Thus, the method now reictes the gluclose limitation Furthermore, the claims now limit the sample to being of hair or urine, whereas previously there was no limitation on the sample type. Thus the claims are now limited in the both the type of analyte determined and the sample type.

Applicant argues that the claims do not require a specific detection steps. However, it is the examiner's position that the claims fail to specifically state what measurement techniques are being employed. Merely stating that determination will occur without describing the steps is inadequate, and applicants arguments are not persaussive. There is no recitation of how the analyte, now glucose will be measured. There is no contact step wherein the hair or urine sample is contacted with the reagents required to determine the volume or amount of blood or glucose. There is no detection step which detects the volume or amount of blood and analyte. There is still no correlation step which correlates determining the amount of analyte and blood in a sample to the level of analyte in the blood of the sample donor. The claims must positively recite method steps. Despite applicants argument that one of skill in the art could figure out which detection steps are necessary to determine the different levels needing comparison, the claims still amount to gaps between the steps since there is no contacting step or detection step that would enable the measurement of glucose from a sample. Therefore, the rejections are maintained.

NOV 0 2 2001

UNITED STATES PATENT AND TRADEMARK OFFICE

COMMISSIONER FOR PATENTS
UNITED STATES PATENT AND TRADEMARK OFFICE
WASHINGTON, D.C. 20231
www.uspto.gov

James M. Moore
Pearne & Gordon LLP
526 Superior Avenue East
Suite 1200
Cleveland, Ohio 44114-1484

In re Application of SAVARD Serial No.: 09/763,507 PCT No.: PCT/FR98/01854 Int. Filing Date: 26 August 1998 Priority Date: 26 August 1998 Atty Docket No.: 33354 For: REAR DERAILLEUR FOR A BICYCLE	DECISION ON PETITION UNDER 37 CFR 1.47(b)

This decision is in response to the petition under 37 CFR 1.47(b) filed 25 July 2001 to accept the application without the signature of inventor Frank Savard.

BACKGROUND

On 26 August 1998, applicant filed international application PCT/FR98/01854. A copy of the international application was communicated to the United States Patent and Trademark Office from the International Bureau on 09 March 2000. A Demand for international preliminary examination, in which the United States was elected was filed prior to the expiration of nineteen months from the priority date. Accordingly, the thirty-month period for paying the basic national fee in the United States expired at midnight on 26 February 2001.

On 23 February 2001, applicant filed a transmittal letter for entry into the national stage in the United States, which was accompanied by the requisite basic national fee as required by 35 U.S.C. 371(c)(1); a translation of the International Application into English and a FIRST preliminary amendment. An oath or declaration as required by 35 U.S.C. 371 (c)(4) was not filed.

On 21 March 2001, applicant was mailed a NOTIFICATION OF MISSING REQUIREMENTS UNDER 35 U.S.C. 371 (Form PCT/DO/EO/905) informing applicant of the need to provide an oath or declaration of the inventors, in compliance with 37 CFR 1.497(a) and (b), identifying the application by the International application number and international filing date. Applicant was given one month to respond and advised that this time period could be extended with a proper petition and payment of fees.

On 25 July 2001, applicant responded with the present petition accompanied by a petition for a three-month extension of time and payment of the $890.00 extension fee.

DISCUSSION

A petition under 37 CFR 1.47(b) must be accompanied by: (1) the requisite petition fee under 37 CFR 1.17(I); (2) factual proof that the inventor refuses to execute the application or cannot be reached after diligent effort; (3) a statement of the last known address of the non-signing inventor; (4) an oath or declaration executed by the 37 CFR 1.47(b) applicant on behalf of and as an agent for the non-signing inventor; (5) proof of proprietary interest in the application; and, (6) a showing that such action is necessary to preserve the rights of the parties or to prevent irreparable damages. With the filing of the present petition and papers, applicant has satisfied items (1) and (3).

Regarding item (2) above, petitioner has not provided any evidence to show that Mr. Savard has been provided with a complete set of the application papers as required under the Manual of Patent Examining Procedure (MPEP) section 409.03 (d). While applicant has provided the letter from Mr. Savard stating his refusal to execute the declaration, nowhere in the petition of accompanying papers is it stated that a complete set of papers (namely, specification, including claims, drawings and oath or declaration) was presented to Mr. Savard. In view of the above, item (2) has not been satisfied. In order to satisfy this requirement, such a statement must be signed by someone with first hand knowledge and must set forth specific facts as to the attempts to obtain Mr. Savard's signature, including presenting him with a complete set of application papers and his subsequent refusal.

As to Item (4), it is not possible to accept the enclosed declaration at this time as it is unclear that Shimano corporation owns the rights to the present application. While applicant has provided declarations stating that this is the case, applicant has not provided any of the documentation referenced in the declarations. Specifically, applicant needs to provide documentation of Shimano's purchase of the present patent.

Regarding Items (5) and (6), as detailed above, applicant has not made a proper showing as to the proprietary rights of Shimano corporation to the present application.

CONCLUSION

Applicant's petition under 37 CFR 1.47(b) is **DISMISSED**.

If reconsideration on the merits of this petition is desired, a proper response must be filed within **TWO (2) MONTHS** from the mailing date of this decision. Any reconsideration request should include a cover letter entitled, "Renewed Petition Under 37 CFR 1.47(b)." No additional petition fee is required. Extension of time may be obtained under 37 CFR 1.136(a).

Should status under 37 CFR 1.47(b) not be successfully completed, the international application will be viewed as having become abandoned with respect to the United States of America.

Any further correspondence with respect to this matter should be directed to the Assistant Commissioner for Patents, Box PCT, Washington, D.C. 20231, with the contents of the letter directed to the attention of the PCT Legal Office.

Richard Cole
Legal Examiner
PCT Legal Office

Derek A. Putonen
Petitions Attorney
PCT Legal Office
Tel: (703) 305-0130
Fax: (703) 308-6459

05 JUN 2002
UNITED STATES PATENT AND TRADEMARK OFFICE

COMMISSIONER FOR PATENTS
UNITED STATES PATENT AND TRADEMARK OFFICE
WASHINGTON, D.C. 20231
www.uspto.gov

Steven J. Solomon
Pearne & Gordon LLP
526 Superior Avenue East
Suite 1200
Cleveland, Ohio 44114-1484

In re Application of	:	
SAVARD	:	DECISION ON PETITION
Serial No.: 09/763,507	:	
PCT No.: PCT/FR98/01854	:	UNDER 37 CFR 1.47(b)
Int. Filing Date: 26 August 1998	:	
Priority Date: 26 August 1998	:	
Atty Docket No.: 33354	:	
For: REAR DERAILLEUR FOR A BICYCLE	:	

This decision is in response to the "Letter and Renewed Petition Under 37 CFR 1.47(b)" filed 11 March 2002 in the United States Patent and Trademark Office (USPTO) to accept the application without the signature of inventor Frank Savard.

BACKGROUND

On 02 November 2001, applicant was mailed a decision dismissing applicant's petition under 37 CFR 1.47(b). Applicant was afforded two months to file any request for reconsideration and advised that extensions of time were available pursuant to 37 CFR 1.136(a).

On 11 March 2002, applicant filed the present renewed petition accompanied by a request for a two-month extension of time and payment of the appropriate extension fee. With the filing of the request for a two-month extension, payment of fee and certification that the papers were deposited for mailing on 26 February 2002, the response is considered to be timely filed.

DISCUSSION

A petition under 37 CFR 1.47(b) must be accompanied by: (1) the requisite petition fee under 37 CFR 1.17(I); (2) factual proof that the inventor refuses to execute the application or cannot be reached after diligent effort; (3) a statement of the last known address of the non-signing inventor; (4) an oath or declaration executed by the 37 CFR 1.47(b) applicant on behalf of and as an agent for the non-signing inventor; (5) proof of proprietary interest in the application; and, (6) a showing that such action is necessary to preserve the rights of the parties or to prevent irreparable damages. Applicant previously satisfied items (1) and (3).

Regarding item (2) above, applicant has presently provided a declaration from an individual with first-hand knowledge that inventor Savard has been presented with a complete set of application papers and a declaration for execution and refused to execute said declaration

absent compensation. As such, applicant has satisfied item (2).

As to Item (4), as applicant has provided sufficient documentation as to the ownership rights of the present application it is now proper to accept the declaration executed on behalf of inventor Savard and on behalf of the corporation, Shimano, Inc.

Regarding Items (5) and (6), as detailed above, applicant has now made a proper showing as to the proprietary rights of Shimano corporation to the present application.

CONCLUSION

Applicant's petition under 37 CFR 1.47(b) is **GRANTED**.

The application has an international filing date of 26 August 1998 under 35 U.S.C. 363, and will be given a date of **25 July 2001** under 35 U.S.C. 371(c).

As provided in 37 CFR 1.47(b), a notice of the filing of this application will be forwarded to the non-signing inventors at their last known addresses of record.

A notice of the filing of the application under 37 CFR 1.47(a) will be published in the Official Gazette.

This application is being returned to the DO/EO/US for processing in accordance with this decision.

Leonard Smith
Legal Examiner
PCT Legal Office

Derek A. Putonen
Petitions Attorney
PCT Legal Office
Tel: (703) 305-0130
Fax: (703) 308-6459

UNITED STATES PATENT AND TRADEMARK OFFICE

COMMISSIONER FOR PATENTS
UNITED STATES PATENT AND TRADEMARK OFFICE
WASHINGTON, D.C. 20231
www.uspto.gov

Mr. Franck Savard
11 Lotissement des Tertres
F-22400 Planguenoual
France

In re Application of :
SAVARD :
Serial No.: 09/763,507 :
PCT No.: PCT/FR98/01854 :
Int. Filing Date: 26 August 1998 :
Priority Date: 26 August 1998 :
Atty Docket No.: 33354 :
For: REAR DERAILLEUR FOR A BICYCLE :

Dear Mr. Savard:

You are named as an inventor in the above identified United States patent application, filed under the provisions of 37 CFR 1.47(a) and 35 U.S.C. 118. Should a patent be granted, you will be designated as an inventor.

As a named inventor, you are entitled to inspect any paper in the file wrapper of the application, order copies of all or any part thereof (at a prepaid cost per 37 CFR 1.19) or to make your position of record in the application. Alternately, you may arrange to do any of the preceding through a registered patent agent or attorney presenting written authorization from you. If you care to join in the application, counsel of record (see below) would presumably assist you. Joining in the application would entail the filing of the appropriate oath or declaration by you pursuant to 37 CFR 1.63.

Leonard Smith
Legal Examiner
PCT Legal Office

Derek A. Putonen
Petitions Attorney
PCT Legal Office

Steven J. Solomon
Pearne & Gordon LLP
526 Superior Avenue East
Suite 1200
Cleveland, Ohio 44114-1484

31 MAR 2003

UNITED STATES PATENT AND TRADEMARK OFFICE

COMMISSIONER FOR PATENTS
UNITED STATES PATENT AND TRADEMARK OFFICE
WASHINGTON, D.C. 20231
www.uspto.gov

Steven J. Solomon
Pearne & Gordon LLP
526 Superior Avenue East
Suite 1200
Cleveland, Ohio 44114-1484

In re Application of SAVARD Serial No.: 09/763,507 PCT No.: PCT/FR98/01854 Int. Filing Date: 26 August 1998 Priority Date: 26 August 1998 Atty Docket No.: 33354 For: REAR DERAILLEUR FOR A BICYCLE	DECISION ON REQUEST FOR CORRECTED FILING RECEIPT

This decision is in response to applicant's "Petition to Correct Notice of Acceptance and Filing Receipt" filed 11 February 2003, requesting the United States Patent and Trademark Office correct the filing receipt for the above captioned application to read "Applicants: Franck Savard."

After careful review of the above captioned file, applicants' request is **GRANTED**.

The filing receipt and the "Notification of Acceptance of Application Under 35 U.S.C. 371 and 37 CFR 1.494 or 1.495" (Form DO/EO/903) mailed 20 November 2002 are hereby **VACATED**.

This application is being returned to the United States Designated/Elected Office (US/DO/EO) for further processing in accordance with this decision, namely the issuance of a corrected filing receipt and "Notification of Acceptance of Application Under 35 U.S.C. 371 and 37 CFR 1.494 or 1.495" (Form DO/EO/903) indicating the applicant as "Franck Savard."

Richard Cole
PCT Legal Examiner
PCT Legal Office

Derek A. Putonen
Attorney Advisor
PCT Legal Office
Tel: (703) 305-0130
Fax: (703) 308-6459

UNITED STATES PATENT AND TRADEMARK OFFICE

Commissioner for Patents
United States Patent and Trademark Office
P.O. Box 1450
Alexandria, VA 22313-1450
www.uspto.gov

Paper No. 12

LIU & LIU
444 S. FLOWER STREET
SUITE 1750
LOS ANGELES, CA 90071

COPY MAILED

OCT 26 2005

OFFICE OF PETITIONS

In re Application of	:	
Rhee et al	:	
Application No. 09/763,589	:	
Filed: February 23, 2001	:	
For: METHOD AND DEVICE FOR GENERATING	:	ON PETITION
VOICE/TEXT/IMAGE COMMERCIAL INFORMATION	:	
RINGBACK TONE DURING COMMUNICATION WAIT	:	

This correspondence is in response to the petition to revive an application abandoned unavoidably under 37 CFR 1.137(a), filed April 13, 2004. The petition is properly treated as a petition under 37 CFR 1.181, to withdraw the holding of abandonment. The delay in treating this petition is regretted.

A Decision on Petition is **held in abeyance** pending resolution of the ownership question.

Background

The above-identified application became abandoned for failure to timely and properly reply to the final Office action, mailed November 18, 2003. The Notice set a three (3) month period for reply. No reply having been received, the application became abandoned on February 19, 2004. A Notice of Abandonment was mailed September 22, 2004.

The instant petition

Applicant files the instant petition wherein Applicant asserts that that a Revocation of Power of Attorney and Power of Attorney were filed in this Office on June 30, 2003. In support of this assertion, Applicant files a copy of his return-receipt postcard evidencing receipt of Change of a Revocation of Power of Attorney and Power of Attorney; Statement Under 37 CFR 3.73(b), and Copies of Assignment.

Review of the File

A review of the application file reveals that the Applicant was filed on February 23, 2001, by the firm of Lee & Hong, 221 N. Figeuroa Street, Los Angeles, CA 90012-2601. The Declaration and Power of Attorney filed with the application directed correspondence to Lee & Hong P.C., 221 N. Figeuroa Street, 11th Floor, Los Angeles, CA 90012-2601. A Notice of Acceptance of Application Under 35 U.S.C. 371 and 37 CFR 1.494 or 1.495 was mailed to Lee & Hong at 221 N. Figeuroa Street, Los Angeles, CA 90012-2601 on November 17, 1999.

On July 25, 2002 (Certificate of Mailing dated July 18, 2002), the firm of Lee & Hong filed a Request for a Corrected Filing Receipt, requesting correction of the title from "rinback" to "ringback".

Thereafter, an assignment was recorded on January 7, 2003, wherein inventors Hyoung Chan Rhee and Jong Su Hong assigned their rights in the application to Ringfree Co., LTD., and identifying Lee & Hong P.C., 221 N. Figeuroa Street, 11th Floor, Los Angeles, CA 90012, as the correspondence address.

A second assignment was recorded on February 10, 2003, wherein inventor Hyoung Chan Rhee, in his capacity as President/Representative Director of Ringfree Co., LTD., assigned the rights of the invention to Ringfree International Corporation ("Ringfree").

Ringfree then revoked the power of attorney and changed the correspondence address

On June 24, 2003, the firm of Liu & Liu, filed a Revocation of Power of Attorney and Power of Attorney, executed by Richard Bertsch in his capacity as President/CEO of Ringfree International Corporation. The petition was accompanied by a Statement Under 37 CFR 3.73(b), evidencing Mr. Bertsch's authority to act on behalf of the assignee. The petition was also accompanied by a copy of both assignments.

This Office failed to enter the change

On November 13, 2003, an Information Disclosure Statement ("IDS") was filed by the original firm of Lee, Hong, Dogerman,

Kang & Schmadeka, 801 N. Figueroa Street, 14th Floor, Los Angeles, CA 90017-5554[1].

On November 18, 2003 this Office mailed the final Office action to Lee & Hong at 221 N. Figeuroa Street, 11th Floor, Los Angeles, CA 90012.

On May 17, 2004 (Certificate of Mailing dated May 12, 2004), a Petition and Fee to Void Assignment was filed by Lee, Hong, Dogerman, Kang & Schmadeka, 801 N. Figueroa Street, 14th Floor, Los Angeles, CA 90017[2].

On May 18, 2004, this Office mailed a Notice Regarding Change of Power of Attorney to Lee & Hong, and a Notice of Acceptance of Power of Attorney to Liu & Liu.

On September 10, 2004, Liu & Liu filed correspondence requesting withdrawal of the abandonment of the application based upon the Revocation of Power of Attorney and Power of Attorney filed June 24, 2003.

On September 22, 2004, a Notice of Abandonment was mailed to Liu & Liu.

On April 13, 2005, Liu & Liu files the instant petition; however, the correspondence address listed on the petition is 444 S. Flower Street, Suite 1750, Los Angeles, CA 90071, which is different from the correspondence address of record.

Conclusion

In view of the Petition and Fee to Void Assignment filed May 17, 2004, "the ownership established as controlling is contested on the record". The Manual of Patent Examining Procedure ("MPEP") provides that where

> the ownership established as controlling is contested on the record by another party who has submitted a conflicting 37 CFR 3.73(b) statement, then the application or other proceeding shall be forwarded by the

[1] Office records do not indicate that a Revocation of Power of Attorney/Power of Attorney or a Change of Correspondence Address was filed by Lee & Hong or Lee, Hong, Dogerman, Kang & Schmadeka.

[2] A Decision of this petition is also being held in abeyance until the ownership issue has been resolved.

Office official in charge of the application or other proceeding to the Office of Patent Legal Administration for resolution of the ownership question.

Accordingly, the application file is being forwarded to the Office of Patent Legal Administration for resolution of the ownership question.

Further correspondence with respect to this Decision should be addressed as follows:

By mail: Commissioner for Patents
PO Box 1450
Alexandria, VA 22313-1450

By FAX: (571) 273-8300
Attn: Office of Petitions

By hand: Customer Service Window
Randolph Building
401 Dulany Street
Alexandria, VA 22314

Telephone inquiries concerning this matter should be directed to the undersigned at (571) 272-3232.

Derek L. Woods
Attorney
Office of Petitions
Office of the Deputy Commissioner
for Patent Examination Policy

Cc: Lee, Hong, Dogerman,
Kang & Schmadeka
801 N. Figueroa Street
14th Floor
Los Angeles, CA 90017

UNITED STATES PATENT AND TRADEMARK OFFICE

Commissioner for Patents
United States Patent and Trademark Office
P.O. Box 1450
Alexandria, VA 22313-1450
www.uspto.gov

Paper No. 13

Lee, Hong, Degerman, Kang & Schmadeka
801 N. Figueroa Street
14th Floor
Los Angeles, CA 90017

WEN LIU
444 S. Flower Street
Suite 1750
Los Angeles, CA 90071

Wen Liu
Liu & Liu
811 West Seventh Street
Suite 1100
Los Angeles CA 90017

COPY MAILED

MAR 0 3 2006

OFFICE OF PETITIONS

In re Application of Rhee, et al Application No. 09/763,589 PCT No.:PCT/KR99/00690 Int. Filing Date: 17 November 1999 Priority Date: 19 July 1999 Attorney's Docket No. 2048-3-02 For: METHOD AND DEVICE FOR GENERATING VOICE/TEXT/IMAGE COMMERCIAL INFORMATION RINGBACK TONE DURING COMMUNICATION WAIT	DECISION ON PETITION TO VOID ASSIGNMENT

The instant application has been forwarded to the Office of Patent Legal Administration (OPLA) for a decision on a May 17, 2004 PETITION ... TO VOID ASSIGNMENT. For the reasons discussed below, the petition is taken as a petition under 37 CFR 1.181(a)(3) for supervisory review of: (1) the recording of an assignment document, and (2) the revocation of the initial (inventors') power of attorney and granting of a subsequent (assignee's) power of attorney.

OPLA is charged with the responsibility of resolving conflicts in assignments where establishment of the appropriate assignee is required to determine which party may take action pursuant to 37 CFR 3.71 to conduct prosecution of an application and appoint a power of attorney and thereby also establish a correspondence address. See MPEP 324, IX Conflicting 37 CFR 3.73(b) Statements. While the referred to Manuel section specifically address conflicts between two or more statements under 37 CFR 3.73(b), it is equally applicable to a conflict between inventors and an assignee as to who is entitled to conduct prosecution. Accordingly, OPLA will decide the present Petition to Void Assignment.

The petition to void assignment is dismissed, for the reasons set forth below.

I. Review of Salient Facts

The instant national stage 35 U.S.C. 371 application papers were submitted on February 23, 2001, and included a Declaration and Power of Attorney pursuant to § 1.63 signed by the two named inventors: Hyoung Chan Rhee (Rhee) and Jong Su Hong (Hong). The inventors provided a power of attorney in-part to Jonathan Y. Kang of Lee & Hong P.C..

On June 30, 2003, a REVOCATION OF PRIOR POWER OF ATTORNEY AND POWER OF ATTORNEY was submitted by the assignee withdrawing the previous power of attorney (which was granted by the inventors via the 37 CFR 1.63 declaration of February 23, 2001) and granting a *new* power of attorney to include Wen Liu of LIU & LIU.

On November 18, 2003, a first Office action on the merits was mailed, setting a 3 month shortened statutory period for reply. The first Office was mailed to the correspondence address as directed by the original power of attorney of February 23, 2001 of the inventors and not as directed by the subsequent June 30, 2003 revocation and new power of attorney of the assignee.

On May 17, 2004 the instant PETITION ... TO VOID ASSIGNMENT was submitted, the apparent purpose of which is to void the subsequent power of attorney granted by the assignee and thereby reinvigorate the initial power of attorney granted by the inventors.[1]

Belatedly, the Office on May 18, 2004, based on the June 30, 2003 Revocation, mailed a NOTICE REGARDING CHANGE IN POWER OF ATTORNEY noting the loss of power of attorney to the practitioners in the office of Lee & Hong (appointed by the inventors) and mailed a NOTICE OF ACCEPTANCE OF POWER OF ATTORNEY to practitioners in the office of Liu & Liu (appointed by the assignee).

II. Petition to Void Assignment

The June 30, 2003 revocation and new power of attorney was made pursuant to 37 CFR 3.71, which permits the assignee of an application to conduct prosecution via appointment of a power of attorney, and change the correspondence address. An assignee seeking to conduct prosecution pursuant to § 3.71 must comply with 37 CFR 3.73(b), which requires that the assignee be established by documentary evidence of the chain of title from the original owners, i.e., the inventors, to the assignee seeking to conduct prosecution. The documentary evidence may be either a copy of the relevant assignment(s), or a reference to the reel(s) and frame number(s) where the assignment(s) are recorded in the Office.

The June 30, 2003 paper included:

1. a copy of an executed assignment (initial assignment) from the two original named inventors, Rhee and Hong to RINGFREE CO., LTD,[2] and

---

[1] The instant petition, in the alternative or in addition to the voiding of the subsequent power of attorney, requests voiding of the assignment from the two inventors to Ringfree Company Limited. Petition at page 1, first paragraph, second sentence.

[2] The assignment has been subsequently recorded at reel 013630, frame 0427, attachment to the May 17, 2004 Petition.

2. a copy of an assignment from Ringfree Company Ltd. to Ringfree International Corporation (a subsequent assignment), the assignee seeking to conduct prosecution pursuant to § 3.71, and a reference to a reel and frame number where the subsequent assignment is recorded.

The May 17, 2004 Petition[3] to Void Assignment, submitted by a practitioner representing the inventors,[4] requests that the Office "void and nullify" both assignments used to support the June 30, 2003 revocation and appointment of a power of attorney.[5] The argument presented, however, only relates to the "subsequent assignment,"[6] which is the assignment from Ringfree Company Ltd. to Ringfree International Corporation. It is asserted that the "subsequent assignment" was "fraudulently procured" and is the subject of pending litigation in the Republic of Korea.

It is further asserted that the inventorship requires correction by the addition of four inventors.[7] A reference is made to four affidavits by the four alleged additional inventors concerning inventorship. Four attached affidavits by these alleged inventors state that since (the subsequent) transfer to Ringfree-International Corp. was "made without any agreement and signing of the undersigned inventors upon the transfer, it is gravely disqualified." The inventors to be added call for the "transfer record of the U.S. Patent and Trademark Office ... be deleted and abolished ...."

III. Decision on Petition to Void Assignment

It appears that petitioner is first explicitly requesting that the assignment records of the Office be either expunged of the "subsequent assignment" (from Ringfree Company Ltd. To Ringfree International Corporation), or that some indication be placed on or with the "subsequent assignment" to note that it is void or has been nullified. If such action were taken, it could presumably be used by petitioner in an effort to justify its second *sub silentio* request that the June 30, 2003 revocation of power of attorney and appointment of a new power of attorney be rescinded as not supported by appropriate documentary evidence.

The petition will therefore be treated as a petition under 37 CFR 1.181(a)(3) as a request for supervisory review of: (1) recording the subsequent assignment, and (2) the May 18, 2004 actions of revoking the initial (inventors') power of attorney and granting the later (assignee) power of attorney. As no argument of invalidity has been presented in regard to the initial assignment, its recording and reliance upon to support the § 3.71 action by the assignee is not contested.

Timeliness of Petition: Preliminarily, 37 CFR 1.181(f) provides that "[a]ny petition under this part not filed within two months of the mailing date of the action or notice from which relief is

---

[3]A $130 petition fee was stated to be submitted pursuant to § 1.17(h).

[4]The practitioner, Amit Sheth, was not listed in the power granted in the original § 1.63 declaration, although the firm the practitioner is a member of, Lee, Hong, Degermen, Kang & Schmadeka, is somewhat similar to the firm the initially named practitioner were members of, Lee & Hong P.C.

[5]Page 1 of the Petition, first paragraph.

[6]Page 2 of the Petition, paragraphs 1 and 3.

[7]Page 2 of the Petition, second paragraph.

requested may be dismissed as untimely ...." The actions by the Office complained of are the Office's recording of the subsequent assignment (from Ringfree Company Ltd. To Ringfree International Corporation) on February 10, 2003,[8] and presumably the May 18, 2004 notifications regarding the revocation and granting of a power of attorney. As the February 10, 2003 recording of the subsequent assignment was more than two months prior to the May 17, 2004 petition, the petition is untimely in regard to the recording of the subsequent assignment. The May 17, 2004 petition on behalf of the inventors curiously also results in a complaint of an Office action on May 18, 2004 (the mailing of the power of attorney notifications) that occurred subsequent to the petition. As it does not appear from the record that the inventors had knowledge of the June 30, 2003 revocation and appointment more than two months prior to the May 18, 2004 notifications mailed by the Office,[9] the May 17, 2004 petition will be treated as timely in regard to any requested review of the June 30, 2003 revocation and appointment.

Relief Requested as To Recorded Assignments: As pointed out, the May 17, 2004 petition in-part seeks review of the Office's recordation of the "subsequent assignment" from Ringfree Company Ltd. to Ringfree International Corporation. Since the petition is not timely as to the relief requested with respect to the "subsequent assignment" being voided (for the reasons given immediately above), the petition is dismissed as to that avenue of relief.

The following information is further to be noted:

The recordation of assignments by the Office is "merely a ministerial act; it is not an Office determination of the validity of the assignment document nor the effect of the assignment document on the ownership of the patent property." MPEP 301, V., Making the Assignment of Record. Thus, the Office will not give effect to any challenge to the validity of an assignment and to requests that the assignment be voided and nullified for the purpose of recording an assignment.[10] Thus, even had the petition been timely as to this aspect of relief requested, such relief would not have been available.

As pointed out above, petitioner asserts that the "subsequent assignment" was "fraudulently procured" and is the subject of pending litigation in the Republic of Korea. Should such litigation be resolved favorably to petitioner, petitioner would be free to record the decision rendered in the Republic Korea litigation, if it is deemed to bear on the ownership issue.

Relief Requested as To Prosecution by Assignee: As pointed out, the May 17, 2004 petition in-part appears to request review of the Office's permitting Ringfree International Corporation to conduct prosecution pursuant to § 3.71 based on impropriety of documentary evidence provided pursuant to § 3.73(b), more specifically the "subsequent assignment" from Ringtone Company Ltd. to Ringtone International Corporation.

Although the Office will not make a substantive determination of the effectiveness of an

---

[8]Copy of subsequent assignment attached to the Petition, reel 013739, frame 0194.

[9]For example, there is no indication in the record that the assignee served the § 3.71 papers on the inventors or otherwise informed them of its intentions or the filing of the § 3.71 papers.

[10]MPEP 323.01(d) and the references therein to MPEP 323.01(a)(c) relate to the expungement of the link between an assignment record and an application due to typographical errors on the part of the party submitting the assignment, which is not the case herein.

assignment for the purpose of recording an assignment, the Office "[w]hen necessary ... will determine what effect a[n assignment] document has, including whether a party has the authority to take an action in a matter pending before the Office." MPEP 317.03.

Pursuant to MPEP 324, part IX:

> "Generally, where there are two or more conflicting 37 CFR 3.73(b) statements in an application, the ownership entity that filed that application will be permitted to conduct the prosecution, and the other party that submitted a 37 CFR 3.73(b) statement to establish its ownership may wish to consider filing an application under 37 CFR 1.47."

On their face, the June 30, 2003 papers revoking power of attorney and granting a new power of attorney based on Ringtone International Corporation being the assignee of the entire right, title and interest of the instant application appear appropriate and compliant with the requirements of §§ 3.71 and 3.73, to permit the current assignee Ringfree International Corporation to conduct prosecution and appoint a power of attorney. Accordingly, the Office on May 18, 2004, based on the June 30, 2003 Revocation, mailed a NOTICE REGARDING CHANGE IN POWER OF ATTORNEY noting the loss of power of attorney to the practitioners in the office of Lee & Hong (appointed by the inventors) and mailed a NOTICE OF ACCEPTANCE OF POWER OF ATTORNEY to practitioners in the office of Liu & Liu (appointed by the assignee). A review of Office PALM data reveals that power of attorney is currently given to Wen Liu and Jason Truong with a correspondence address to Liu & Liu based on the June 30, 2003 revocation of power of attorney and appointment of a new power of attorney.

The inventors are now, however, challenging the right to ownership of the present patent application property, stating that they own the present patent application property. Inventors are the *de facto* owners of the property where they have not assigned away the rights thereto. Accordingly, if indeed the inventors have not assigned away their property rights, there would be no need for a 37 CFR 3.73(b) statement, and the inventors would stand in the position stated MPEP 324, part IX to provide a conflicting statement of ownership despite the absence of a 37 CFR 3.73(b) statement. Given that the instant national stage 35 U.S.C. 371 application papers included a Declaration and Power of Attorney pursuant to § 1.63 signed by the two named inventors, appointing in-part to Jonathan Y. Kang of Lee & Hong P.C., the application can be stated to have been filed at least in part by the inventors. Accordingly, the inventorship-ownership entity that filed that application would ordinarily be permitted to conduct the prosecution, and the assignee that submitted a 37 CFR 3.73(b) statement to establish its ownership would be permitted to file its own application under 37 CFR 1.47.

In this instance, however, the inventors have not established any present ownership rights in the application property. No argument has been presented that the initial assignment from the two original named inventors, Rhee and Hong to RINGFREE CO., LTD is invalid. Although the instant petition requests alternative or additional relief of the voiding of the assignment from the two inventors to Ringfree Company Limited, [11] no argument is presented to support that request for relief.[12] Absent such an argument, *and a reasonable basis to support the argument*, it must be

---

[11] Petition at page 1, first paragraph, second sentence.

[12] Although petitioner has alleged that there may be four additional inventors, who petitioner would argue not to have participated in the original assignment, these alleged inventors are not named inventors, and as such have no rights in controlling prosecution. It is only the two named inventors that control, and they have assigned their rights away.

concluded that the inventors are not the owners of the instant application property. Thus, the June 30, 2003 papers are the only papers in the application filed by a party that has established its ownership in the application property. Accordingly, Ringfree International Corporation is entitled to conduct prosecution and appoint a power of attorney. Thus, the petition as it relates to the current power of attorney in the instant application is dismissed.[13]

Additional Points of Note: As to the request for review of the May 18, 2004 notices regarding revocation and grant of a power of attorney based on the effectiveness of the subsequent assignment,[14] the following is to be noted:

1. The statement by counsel that the "subsequent assignment" was fraudulently procured is a mere allegation unsupported by facts.

2. The statement by the four individuals alleged to be inventors that the transfer was made without the agreement of these individuals is ineffective, as their agreement would not be required until such time as these individuals were actually established as named inventors; yet, it has not even been established by factual evidence that these individuals deserved to be named as inventors. The allegation that there may be four additional inventors is not a determining factor as to the existence of an appropriate assignee,[15] until such inventors are in fact added to the application, by an appropriate request for correction of the inventorship entity and an Office grant of that request.[16] [17]

---

[13] The request for a phone call should the petition be found to be inadequately supported is noted, however, in view of the issues presented and the lack of any basis to overturn the acceptance of the current power of attorney given by the assignee, such phone call is not seen to be productive.

[14]There is no allegation that the "subsequent assignment" was not signed by an appropriate party, nor are there any facts set forth attacking the initial assignment.

[15] Or as to the involvement of an assignee in the prosecution of an application.

[16]See, for example, MPEP 201.03, II., D., Written Consent of Assignee. Where a correction of inventorship is requested, only the written consent thereto of the original named inventors is required and not of inventors to be added.

[17]The allegation of the existence of four unnamed inventors can, however, present an issue pursuant to 35 U.S.C. 102(f) until such time that either (a) it is clarified that the party controlling prosecution believes that the inventorship need not be corrected, or (b) a request for correction of inventorship pursuant to § 1.48(a) is filed. This would be an issue for the examiner to review and determine whether, for example, it would be appropriate to issue (1) a provisional rejection under 35 U.S.C. 102(f) based on the statements in the four affidavits attached to the May 17, 2004 Petition (giving the assignee the opportunity to rebut), or (2) a requirement for information pursuant to 37 CFR 1.105 based on the statements in the four affidavits. It is noted that the petition appears to imply that it would not be possible for the assignee to consent to inventorship correction due to the pending litigation in the Republic of Korea.

3. The existence of pending litigation in the Republic Korea, as alleged by counsel, has not been established, nor has any of the issues or facts established therein been made of record and cannot support an attack on the validity of the "subsequent assignment." Moreover, at best, the litigation is apparently still pending and final findings of fact and law have not been made.

IV. Correspondence Address

The current correspondence address of record, which address appears in Office PALM data, was set by the June 30, 2003 revocation and appointment of power of attorney and is:

Wen Liu
Liu & Liu
811 West Seventh Street; Suite 1100
Los Angeles, California 90017

It is noted that the October 26, 2005 decision ON PETITION was mailed to the following address, which address was present in an April 13, 2004 petition by the assignee of record to revive the application:

LIU & LIU
444 S. Flower Street
Suite 1750
Los Angeles, CA 90071

As a courtesy, the instant decision is being mailed to both assignee addresses. All future papers will be mailed to the correspondence address of record, which is the West Seventh Street address absent an explicit change in correspondence address to the Flower Street address.

V. Conclusion

1. The May 17, 2004 petition is dismissed.

2. A decision to withdraw the notice of abandonment in the application is being mailed on even date.

3. Telephone inquiries related to this decision should be directed to the undersigned, at 571-272-7707, or in his absence to Kenneth M. Schor at 571-272-7710.

Hiram H. Bernstein
Senior Legal Advisor
Office of Patent Legal Administration
(571) 272-7707

UNITED STATES PATENT AND TRADEMARK OFFICE

Commissioner for Patents
United States Patent and Trademark Office
P.O. Box 1450
Alexandria, VA 22313-1450
www.uspto.gov

Paper No. 14

WEN LIU
444 S. Flower Street
Suite 1750
Los Angeles, CA 90071

Wen Liu
Liu & Liu
811 West Seventh Street
Suite 1100
Los Angeles CA 90017

COPY MAILED

MAR 0 3 2006

OFFICE OF PETITIONS

In re Application of Rhee, et al Application No. 09/763,589 PCT No.:PCT/KR99/00690 Int. Filing Date: 17 November 1999 Priority Date: 19 July 1999 Attorney's Docket No. 1141/201 For: METHOD AND DEVICE FOR GENERATING VOICE/TEXT/IMAGE COMMERCIAL INFORMATION RINGBACK TONE DURING COMMUNICATION WAIT	DECISION ON PETITION TO WITHDRAW NOTICE OF ABANDONMENT

The instant application was forwarded to the Office of Patent Legal Administration (OPLA) for a decision on a May 17, 2004 PETITION ... TO VOID ASSIGNMENT, which has been rendered in a separate paper of even date. To expedite placement of this application back into prosecution, an April 13, 2005 petition under 37 CFR 1.137(a), to revive the instant application as unavoidably abandoned, previously treated as a petition to withdraw a notice of abandonment and held in abeyance pending a decision on the petition to void assignment in an October 26, 2005 decision on the petition, will also be treated by OPLA.

The petition to withdraw the notice of abandonment is Granted.

I. Brief Review of Facts

The instant national stage 35 U.S.C. 371 application papers were submitted on February 23, 2001, which included a Declaration and Power of Attorney pursuant to § 1.63 signed by the two named inventors: Hyoung Chan Rhee (Rhee) and Jong Su Hong (Hong). The inventors provided a power of attorney in-part to Jonathan Y. Kang of Lee & Hong P.C.

On June 30, 2003 a REVOCATION OF PRIOR POWER OF ATTORNEY AND POWER OF ATTORNEY was submitted by the assignee withdrawing the previous power of attorney (granted in the February 23, 2001 § 1.63 declaration by the inventors) and granting a new power of

attorney to Wen Liu of LIU & LIU.

On November 18, 2003 a first Office action on the merits, setting a 3 month shortened statutory period for reply, was mailed and sent as directed by the original power of attorney of February 23, 2001 of the inventors and not as directed by the subsequent June 30, 2003 revocation and new power of attorney of the assignee.

Belatedly, the Office on May 18, 2004, based on the June 30, 2003 Revocation, mailed a NOTICE REGARDING CHANGE IN POWER OF ATTORNEY noting the loss of power of attorney to the practitioners in the office of Lee & Hong (appointed by the inventors) and mailed a NOTICE OF ACCEPTANCE OF POWER OF ATTORNEY noting the grant of a power of attorney to practitioners in the office of LIU & LIU (appointed by the assignee).

On September 22, 2004 the Office mailed to Wen Liu a practitioner in the Office of LIU & LIU a Notice of Abandonment based on the failure to receive a reply to the Office action of November 18, 2003 (notwithstanding a September 10, 2004 paper from Wen Liu noting that he had been advised the application was abandoned, and that the Office action causing the abandonment was not mailed to the correct correspondence address based on the June 30, 2003 new appointment of a power of attorney).

On April 13, 2005 the instant petition for revival of the application pursuant to § 1.137(a) was submitted along with a reply to the outstanding Office action.

On October 26, 2005 the Office of Petitions determined that the § 1.137(a) petition to revive the abandoned application was properly treated as a petition to withdraw the holding of abandonment pursuant to 37 CFR 1.181(a)(3). This petition was then held in abeyance pending the outcome of another petition on behalf of the inventors in effect challenging the appropriateness of the assignee and the power of attorney set forth by that assignee.

II. Decision on Petition to Withdraw Notice of Abandonment

The Office in a decision of even date, having determined that a power of attorney as provided by the assignee is appropriate, will now address the petition to withdraw the notice of abandonment submitted on behalf of the assignee along with a $250 petition fee.

A § 1.181 petition does not require a petition fee. As an authorization has not been provided to credit any excess fees to a deposit account, a refund of the $ 250 § 1.137(a) petition fee may be timely requested pursuant to § 1.26(b) by separate letter with a copy of this decision to Finance Branch.

As the underlying Office action causing issuance of the Notice of Abandonment was not mailed by the Office to the correct correspondence address to a practitioner in the Office of LIU & LIU, but was instead mailed to a previous correspondence address to a practitioner in the Office of Lee & Hong[1], the petition is granted.

As the April 13, 2004 petition was accompanied by a RESPONSE TO OFFICE ACTION, the application is in condition for further examination.

---

[1]The petition to revive states that a copy of the Office action was not forwarded, at page 3.

III. Correspondence Address

The current correspondence address of record and which appears in Office PALM data was set by the June 30, 2003 revocation and appointment of power of attorney and is:

Wen Liu
Liu & Liu
811 West Seventh Street; Suite 1100
Los Angeles, California 90017

It is noted that the October 26, 2005 decision ON PETITION was mailed to the following address, which address was present in the April 13, 2005 petition to revive the application:

LIU & LIU
444 S. Flower Street
Suite 1750
Los Angeles, CA 90071

As a courtesy, the instant decision is being mailed to both addresses. All future papers will be mailed to the correspondence address of record, which is the West Seventh Street address absent an explicit change in correspondence address to the Flower Street address.

IV. Forwarding of Application

The application is being forwarded to TC Art Unit 2642 for an action on the merits in response to applicant's reply of April 13, 2005.

Hiram H. Bernstein
Senior Legal Advisor
Office of Patent Legal Administration
(571) 272-7707

UNITED STATES PATENT AND TRADEMARK OFFICE

UNITED STATES DEPARTMENT OF COMMERCE
United States Patent and Trademark Office
Address: COMMISSIONER FOR PATENTS
P.O. Box 1450
Alexandria, Virginia 22313-1450
www.uspto.gov

BACON & THOMAS, PLLC
625 SLATERS LANE
FOURTH FLOOR
ALEXANDRIA, VA 22314-1176

Mail Date: 04/23/2010

Applicant	: Harald Vater	: DECISION ON REQUEST FOR
Patent Number	: 7602916	: RECALCULATION of PATENT
Issue Date	: 10/13/2009	: TERM ADJUSTMENT IN VIEW
Appliction No	: 09/763,621	: OF WYETH
Filed	: 04/26/2001	:
		:

The Patentee's Request for Recalculation is **DISMISSED.**

This Request is deemed ineligible for consideration for one or more of the following reasons:

(A). The patent for which PTA recalculation is requested is either a design or reissue application or is a reexamination proceeding;

(B). The patent for which PTA recalculation is requested resulted from a utility or plant application filed under 35 USC 111(a) before May 29, 2000 and no CPA filed in the application on/after May 29, 2000;

(C). The patent for which PTA recalculation is requested resulted from an international application in which the international filing date was before May 29, 2000 and no CPA filed in the application on/after May 29, 2000;

(D). The patent for which PTA recalculation is requested issued on/after March 2, 2010;

(E). The Request for Recalculation was filed more than 180 days after the grant date of the patent and the request was not filed within two months of a dismissal of a request for reconsideration of the of the patent term under 37 CFR 1.705(d);

(F). The Request for Recalculation is not solely limited to USPTO pre-Wyeth interpretation of 35 U.S.C. 154(b)(2)(A);

or

(G). A civil action was filed pursuant to 35 U.S.C. 154(b)(4)(A)concerning the same patent at issue in this request.

Patentee may file a reply to this decision dismissing the Request for Recalculation. Patentee must file such reply within one month or thirty days, whichever is longer, of the mail date of the decision dismissing the Request for Recalculation. No fee is required if patentee is asserting in the reply that the dismissal for ineligibility is improper.

Patentee should use document code PET.OP if electronically filing a reply to this dismissal. If the USPTO finds that the request was improperly deemed ineligible, the USPTO will mail applicant a recalculation determination.

Patentee should be aware that in order to preserve the right to review in the United States District Court for the District of Columbia of the USPTO patent term adjustment determination, patentee must ensure that he or she also take the steps required under 35 U.S.C. 154(b)(4)(A). Nothing in the request for recalculation should be construed as providing an alternative time frame for commencing a civil action under 35 U.S.C. 154 (b)(4)(A).

Any questions concerning this decision should be directed to the Office of Patent Legal Administration at 571-272-7702.

JAN 2 9 2002

UNITED STATES PATENT AND TRADEMARK OFFICE

Commissioner for Patents
United States Patent and Trademark Office
Washington, D.C. 20231
www.uspto.gov

Charles W. Fallow
SHOEMAKER AND MATTARE
2001 Jefferson Davis Highway, Suite 1203
Arlington, VA 22202

In re Application of
PETERSEN, Michael *et al*
Application No.: 09/763,635
PCT No.: PCT/EP00/05532
Int. Filing Date: 15 June 2000
Priority Date: 16 July 1999
Attorney's Docket No.: 4988
For: METHOD AND AUXILIARY DEVICE FOR LEASING THREADS INTO GUIDE ELEMENTS . . .

DECISION

The decision is in response to the papers submitted via facsimile on 16 October 2001 which are treated as a petition under 37 CFR 1.181. No fee is required.

BACKGROUND

On 03 May 2001, the United States Designated/Elected Office (DO/EO/US) mailed a Notification of Missing Requirements Under 35 U.S.C. 371 (Form PCT/DO/EO/905) indicating that a declaration in compliance with 37 CFR 1.497, an English translation, a surcharge fee, and a processing fee must be provided. Applicants were given two-months to respond with extensions of time available pursuant to 37 CFR 1.136(a).

On 23 May 2001, applicants filed an executed declaration, a check of $170.00 for the surcharge fee and assignment fee, and granted authorization to charge Deposit Account No. 19-2110 for any deficiencies if necessary.

On 16 October 2001, applicants filed the instant petition which was accompanied by, *inter alia*, copies of the documents purportedly filed 23 May 2001, a copy of a check receipt for $170.00 dated "05/23/01," and a stamped postcard receipt.

DISCUSSION

Applicants submitted the instant petition via facsimile on 16 October 2001. Applicants claim that an executed declaration, an assignment, and a check of $170.00 were submitted in response to the Form PCT/DO/EO/905 mailed 03 May 2001.

MPEP § 503 lists procedures to ensure receipt of any paper filed in the USPTO. Applicants must enclose a self-addressed postcard identifying all of the papers filed.

The USPTO will stamp the receipt date on the card and place it on the outgoing mail. The identifying data on the card must clearly identify the paper for which receipt is requested. A postcard receipt which itemizes and properly identifies the papers which are being filed serves as *prima facie* evidence of receipt in the USPTO of all the items listed thereon on the date stamped thereon by the USPTO.

Applicants included a date stamped filing receipt with the papers filed on 16 October 2001. A review of the above-identified application reveals that a signed declaration in compliance with 37 CFR 1.497 was located in the file. The declaration was dated 23 May 2001. Further, a check of financial records for the above-identified application show that a surcharge fee of $130.00 and an assignment fee of $40.00 was received in the USPTO on 23 May 2001.

Accordingly, the instant petition is not required to demonstrate that those papers were filed in the above-captioned application on 23 May 2001.

However, the Form PCT/DO/EO/905 mailed to applicants indicated that an English translation of the International Application ("IA") and a $130.00 processing fee pursuant to 37 CFR 1.492(f) was also required. A review of the above-captioned file and the filing receipt dated "MAY 23 2001" reveal that an English translation and processing fee were not submitted on 23 May 2001. Moreover, a search of the application file did not locate an English translation. Further, a check of the transmittal letter (Form PTO-1390) reveals that Box No. 6 which indicates whether a translation of the IA into English pursuant to 35 U.S.C. 371(c)(2) was provided with the documents filed, was not checked. Therefore, it is clear that an English translation of the IA has not been provided.

The $130.00 processing fee has been charged to Deposit Account No. 19-2110.

DECISION

The petition pursuant to 37 CFR 1.181 is dismissed as **MOOT**.

This application will be forwarded to the DO/EO/US for the mailing a Notification of Defective Response (Form PCT/DO/EO/916) indicating that a translation of the IA is still required.

Richard Cole
PCT Legal Examiner
PCT Legal Office

James Thomson
Attorney Advisor
PCT Legal Office

Tel.: (703) 308-6457

UNITED STATES PATENT AND TRADEMARK OFFICE

COMMISSIONER FOR PATENTS
UNITED STATES PATENT AND TRADEMARK OFFICE
WASHINGTON, D.C. 20231
www.uspto.gov

Paper No. 14

Jones Volentine
12200 Sunrise Valley Drive, Suite 150
Reston, VA 20191

COPY MAILED

APR 0 7 2003

OFFICE OF PETITIONS

In re Application of
Giles et al.
Application No. 09/763,641
Filed: March 29, 2001
Attorney Docket No. WLJ.072

ON PETITION

This is a decision on the petition under 37 C.F.R. § 1.137(b), filed March 28, 2003, to revive the above-identified application.

The petition is **granted.**

This application became abandoned for failure to timely reply within three months to the final Office action mailed June 18, 2002. No extensions of time under the provisions of 37 CFR 1.136(a) were obtained. Accordingly, this application became abandoned on September 19, 2002. A Notice of Abandonment was mailed on March 11, 2003.

Petitioner has met the requirements to revive the above-identified application pursuant to 37 CFR 1.137(b).

The Notice of Appeal filed March 28, 2003, has been entered and made of record. Accordingly, the 2-month period for filing the appeal brief, in triplicate, accompanied by the fee required by law, runs from the date of this decision.

The file is now being forwarded to Technology Center 2800.

Telephone inquiries should be directed to Petitions Attorney Steven Brantley at (703) 306-5683.

Charles Steven Brantley
Petitions Attorney
Office of Petitions

UNITED STATES PATENT AND TRADEMARK OFFICE

Commissioner for Patents
United States Patent and Trademark Office
P.O. Box 1450
Alexandria, VA 22313-1450
www.uspto.gov

VOLENTINE FRANCOS, & WHITT
ONE FREEDOM SQUARE
11951 FREEDOM DRIVE SUITE 1260
RESTON VA 20190

COPY MAILED

NOV 16 2006

OFFICE OF PETITIONS

In re Application of
Katherine Giles et al
Application No. 09/763,641
Filed: March 29, 2001
Attorney Docket No. WLJ.072

DECISION GRANTING PETITION
UNDER 37 CFR 1.137(b)

This is a decision on the petition under 37 CFR 1.137(b), filed July 7, 2006, to revive the above-identified application.

The petition is **GRANTED**.

The petition satisfies the conditions for revival pursuant to the provisions of 37 CFR 1.137(b) in that (1) the reply in the form of an RCE and an IDS (2) the petition fee; and (3) the required statement of unintentional delay have been received. Accordingly, the reply to the Final Rejection of March 10, 2005, is accepted as having been unintentionally delayed.

Telephone inquiries concerning this decision should be directed to the undersigned at (571) 272-3208.

This matter is being referred to Technology Center AU 2812.

Karen Creasy

Karen Creasy
Petitions Examiner
Office of Petitions

UNITED STATES PATENT AND TRADEMARK OFFICE

Commissioner for Patents
United States Patent and Trademark Office
P.O. Box 1450
Alexandria, VA 22313-1450
www.uspto.gov

VOLENTINE FRANCOS, & WHITT
ONE FREEDOM SQUARE
11951 FREEDOM DRIVE SUITE 1260
RESTON VA 20190

COPY MAILED
NOV 16 2006
OFFICE OF PETITIONS

In re Application of	:
Katherine Giles et al	:
Application No. 09/763,641	: DECISION GRANTING PETITION
Filed: March 29, 2001	: UNDER 37 CFR 1.137(b)
Attorney Docket No. WLJ.072	:

This is a decision on the petition under 37 CFR 1.137(b), filed July 7, 2006, to revive the above-identified application.

The petition is **GRANTED**.

The petition satisfies the conditions for revival pursuant to the provisions of 37 CFR 1.137(b) in that (1) the reply in the form of an RCE and an IDS (2) the petition fee; and (3) the required statement of unintentional delay have been received. Accordingly, the reply to the Final Rejection of March 10, 2005, is accepted as having been unintentionally delayed.

Telephone inquiries concerning this decision should be directed to the undersigned at (571) 272-3208.

This matter is being referred to Technology Center AU 2812.

Karen Creasy

Karen Creasy
Petitions Examiner
Office of Petitions

SPE RESPONSE FOR CERTIFICATE OF CORRECTION

Paper No.: _____

DATE : 08/07/07

TO SPE OF : ART UNIT 1625

SUBJECT : Request for Certificate of Correction for Appl. No.: **09/763704** Patent No.: **7030063**

Please respond to this request for a certificate of correction within 7 days.

Please review the requested changes/corrections as shown in the **COCIN** document(s) in the IFW application image. No new matter should be introduced, nor should the scope or meaning of the claims be changed.

Please complete the response (see below) and forward the completed response to scanning using document code **COCX**.

Angela Green
Certificates of Correction Branch
703.308.9380 ext. 123

Thank You For Your Assistance

The request for issuing the above-identified correction(s) is hereby:
Note your decision on the appropriate box.

- [x] **Approved** — **All** changes apply.
- [ ] **Approved in Part** — Specify below which changes **do not** apply.
- [ ] **Denied** — State the reasons for denial below.

Comments: _____

SPE

1625
Art Unit

PTOL-306 (REV. 7/03)

U.S. DEPARTMENT OF COMMERCE Patent and Trademark Office

UNITED STATES PATENT AND TRADEMARK OFFICE

COMMISSIONER FOR PATENTS
UNITED STATES PATENT AND TRADEMARK OFFICE
WASHINGTON, D.C. 20231
www.uspto.gov

Paper No. 10

Powell, Goldstein, Frazer & Murphy, LLP
P.O. Box 97223
Washington, DC 20090-7223

COPY MAILED

FEB 27 2003

OFFICE OF PETITIONS

In re Application of	:	
Helen Biddiscombe	:	
Application No. 09/763,723	:	ON PETITION
Filed: February 27, 2001	:	
Attorney Docket No. 6001-011	:	

This is a decision on the petition under 37 CFR 1.137(b), filed February 19, 2003, to revive the above-identified application.

The petition is **GRANTED**.

The above-identified application became abandoned for failure to reply in a timely manner to the non-final Office action mailed March 20, 2002, which set a shortened statutory period for reply of three (3) months. No extensions of time under the provisions of 37 CFR 1.136(a) were obtained. Accordingly, the above-identified application became abandoned after midnight June 20, 2002.

The application is being forwarded to Technology Center 1700 for further processing.

Telephone inquiries concerning this decision should be directed to Andrea Smith at (703) 308-6711.

Andrea Smith
Petitions Examiner
Office of Petitions
Office of the Deputy Commissioner
for Patent Examination Policy

UNITED STATES PATENT AND TRADEMARK OFFICE

Commissioner for Patents
United States Patent and Trademark Office
P.O. Box 1450
Alexandria, VA 22313-1450
www.uspto.gov

BARBARA E. JOHNSON
700 KOPPERS BUILDING
436 SEVENTH AVENUE
PITTSBURGH, PA 15219-1818

COPY MAILED

AUG 0 2 2005

OFFICE OF PETITIONS

In re Application of
Thorvald Eelco WALLAART et al
Application No. 09/763,822
Filed: April 24, 2001
Attorney Docket No. 0702-010272

DECISION ON PETITION
UNDER 37 CFR 1.137(b)

This is a decision on the petition under 37 CFR 1.137(b), filed July 13, 2005, to revive the above-identified application.

The petition is **GRANTED**.

The above-identified application became abandoned for failure to reply in a timely manner to the non-final Office action mailed December 1, 2004, which set a shortened statutory period for reply of three (3) months. No extensions of time under the provisions of 37 CFR 1.136(a) were obtained. Accordingly, the application became abandoned on March 2, 2005.

The petition satisfies the conditions for revival pursuant to the provisions of 37 CFR 1.137 (b) in that (1) the reply in the form of an Amendment; (2) the petition fee of $1,500; and (3) the required statement of unintentional delay have been received. Accordingly, the reply to the non-final Office action of December 1, 2004 is accepted as having been unintentionally delayed.

An extension of time under 37 CFR 1.136 must be filed prior to the expiration of the maximum extendable period for reply. See In re Application of S., 8 USPQ2d 1630, 1631 (Comm'r Pats. 1988). Accordingly, since the $1,020 extension of time submitted with the petition on July 13, 2005 was subsequent to the maximum extendable period for reply, this fee is unnecessary and will be credited to petitioner's deposit account.

Telephone inquiries concerning this decision should be directed to Amelia Au at (571) 272-7414. All other inquiries concerning either the examination or status of the application should be directed to the Technology Center.

The application file is being referred to Technology Center Art Unit 1652 for appropriate action on the concurrently filed amendment.

Frances Hicks
Lead Petitions Examiner
Office of Petitions
Office of the Deputy Commissioner
for Patent Examination Policy

UNITED STATES PATENT AND TRADEMARK OFFICE

Commissioner for Patents
United States Patent and Trademark Office
P.O. Box 1450
Alexandria, VA 22313-1450
www.uspto.gov

PHILIPS INTELLECTUAL
PROPERTY & STANDARDS
P.O. BOX 3001
BRIARCLIFF MANOR, NY 10510

COPY MAILED

JUN 30 2006

OFFICE OF PETITIONS

In re Application of

Herrmann, et al.

Application No. 09/763,845

Filed: February 27, 2001

Attorney Docket No. PHD 99,088

DECISION ON PETITION

This is a decision on the petition under 37 CFR 1.137(b), filed May 10, 2006, to revive the above-identified application.

The petition is **GRANTED**.

The above-cited application became abandoned for failure to timely seek judicial review after the Board of Patent Appeals and Interferences decision affirming the examiner's rejection was mailed on February 23, 2006. The application became abandoned on April 23, 2006. A Notice of Abandonment was mailed on May 1, 2006.

The Request for Continued Examination, filed April 28, 2006, is noted, and with a duplicate submission filed May 10, 2006.

The application is being forwarded to Technology Center 2600, GAU 2611 for further processing.

Telephone inquiries concerning this decision should be directed to the undersigned at (571) 272-3222.

Kenya A. McLaughlin
Petitions Attorney
Office of Petitions

MAY 29 2001

UNITED STATES PATENT AND TRADEMARK OFFICE

Commissioner for Patents
United States Patent and Trademark Office
Washington, D.C. 20231
www.uspto.gov

ARMSTRONG, WESTERMAN, HATTORI, MCLELAND & NAUGHTON
1725 K Street N.W.
Suite 1000
Washington DC 20006

In re Application of	:	
MIKAMI, Ikuko	:	
U.S. Application No.: 09/763,882	:	DECISION ON PETITION
PCT No.: PCT/JP00/04094	:	UNDER 37 CFR 1.182
International Filing Date: 22 June 2000	:	
Priority Date: 30 June 1999	:	
Attorney's Docket No.: 001084	:	
For: MOTHER'S MILK PAD	:	

This decision is issued in response to applicant's "Petition Under 37 CFR 1.182 To Correct Transmittal Letter To The United States Designated Office" filed on 16 May 2001. Deposit Account No. 01-2340 has been charged the required petition fee.

BACKGROUND

On 22 June 2000, applicant filed international application PCT/JP00/04094 which claimed a priority date of 30 June 1999 and which designated the United States. On 04 January 2001, a copy of the international application was communicated to the United States Patent And Trademark Office ("USPTO") by the International Bureau ("IB").

A Demand was not filed with the International Preliminary Examining Authority electing the United States prior to the expiration of nineteen months from the priority date. As a result, the deadline for payment of the basic national fee was twenty months from the priority date, i.e., 28 February 2001.

On 28 February 2001, applicant filed a transmittal letter under attorney docket number 001084 for entry into the national stage in the United States accompanied by, among other materials, a translation into English of PCT/JP00/04094 and payment of the basic national fee. However, the transmittal letter incorrectly identified the international application number as PCT/JP00/01963. The transmittal letter also lists the international filing date and the priority date for PCT/JP00/01963.

On 16 May 2001, applicant filed the petition considered herein. The petition seek to correct the errors in the transmittal letter filed on 28 February 2001 to make clear that the application is intended to be the national stage of international application PCT/JP00/04094.

DISCUSSION

In the present petition, applicant asserts that the documents filed on 28 February 2001 under attorney docket number 001084 and assigned application number 09/763,882 were intended to initiate the national stage in the United States for international application PCT/JP00/04094, as evidenced by, among other things, the references to inventor Ikuko Mikami and the title "BREAST PAD" in the transmittal letter and the inclusion with the transmittal letter of a specification, drawings, and claims corresponding to PCT/JP00/04094. The petition asserts that the references to PCT/JP00/01963 on the Form PTO-1390 transmittal letter were the result of an error which should be corrected to identify the proper international application, PCT/JP00/04094, the proper international filing date, 22 June 2000, and the proper priority date, 30 June 1999.

Based on a review of the documents filed on 28 February 2001 and the statements contained in the present petition, it is concluded that the papers filed under attorney docket number 001084 and assigned application number 09/763,882 represent the national stage filing for international application PCT/JP00/04094.

CONCLUSION

The petition under 37 CFR 1.182 is **GRANTED.**

Accordingly, the present application will be treated as the U.S. national stage of PCT/JP00/04094. The Form PTO-1390 transmittal letter filed on 28 February 2001 will be replaced with the corrected transmittal letter included with the present petition.

Pursuant to applicant's authorizations, Deposit Account No. 01-2340 has been charged the $130 as the petition fee.

This application file has been forwarded to the national Stage Processing Branch of the PCT Operations Division for further processing in accord with this decision, including the mailing of a Notification Of Missing Requirements (Form PCT/DO/EO/905) requiring submission of an executed declaration in compliance with 37 CFR 1.497.

Leonard Smith
PCT Legal Examiner
PCT Legal Office

Richard M. Ross
PCT Petitions Attorney
PCT Legal Office
Telephone: (703) 308-6155
Facsimile: (703) 308-6459

RMR/LS:rmr

UNITED STATES PATENT AND TRADEMARK OFFICE

COMMISSIONER FOR PATENTS
UNITED STATES PATENT AND TRADEMARK OFFICE
P.O. BOX 1450
ALEXANDRIA, VA 22313-1450
www.uspto.gov

Laurence B Bond
Trask Britt
PO Box 2550
Salt Lake City, UT 84110

COPY MAILED
NOV 23 2004
OFFICE OF PETITIONS

In re Patent No. 6,758,971 :
Issued: July 6, 2004 :
Application No. 09/763,903 : NOTICE
Filed: February 26, 2001 :
Attorney Docket No. 3746.1 :

This is a notice regarding your request for acceptance of a fee deficiency submission under 37 CFR 1.28(c), filed October 4, 2004.

As set forth at 37 CFR 1.28(c), the deficiency is based on the amount of the fee, for other than a small entity, in effect at the time the deficiency is paid in full." Accordingly, the fee deficiency submission under 37 CFR 1.28 is hereby **accepted**.

The change of status to a large entity has been entered and made of record.

This file is being forwarded to the Office of Initial Patent Examination for further processing.

Telephone inquiries regarding this decision should be directed to the undersigned at (571) 272-3205.

Alesia M. Brown
Senior Petitions Attorney
Office of Petitions

UNITED STATES PATENT AND TRADEMARK OFFICE

Commissioner for Patents
United States Patent and Trademark Office
P.O. Box 1450
Alexandria, VA 22313-1450
www.uspto.gov

In re Patent No. 6551626
Issue Date: April 22,2003
Application No. 09763912
Filed: February 23,2001
Attorney Docket No. MPG-102(2429

:

:DECISION GRANTING PETITION
:UNDER 37 CFR 1.378(c)

:

This is a decision on the electronic petition, filed September 10,2007,under 37 CFR 1.378(c) to accept the unintentionally delayed payment of the 3.5 year maintenance fee for the above-identified patent.

The petition is GRANTED.

The maintenance fee is accepted, and the above-identified patent reinstated as of September 10,2007. This decision also constitutes notice that the fee has been accepted. An electronic copy of the petition and this decision has been created as an entry in an Image File Wrapper. Nevertheless, petitioner should print and retain an independent copy

Telephone inquires related to this electronic decision should be directed to the Electronic Business Center at 1-866-217-9197.

Under the Paperwork Reduction Act of 1995, no persons are required to respond to a collection of information unless it displays valid OMB control number.

PETITION TO ACCEPT UNINTENTIONALLY DELAYED PAYMENT OF MAINTENANCE FEE IN AN EXPIRED PATENT (37 CFR 1.378(c))

Patent Number	Issue Date (YYYY-MM-DD)	Application Number	Filing Date (YYYY-MM-DD)	Docket Number (if applicable)
6551626	2003-04-22	09763912	2001-02-23	MIH-17520

CAUTION: Maintenance fee (and surcharge, if any) payment must correctly identify: (1) the patent number and (2) the application number of the actual U.S. application leading to issuance of that patent to ensure the fee(s) is/are associated with the correct patent. 37 CFR 1.366(c) and (d).

SMALL ENTITY
☒ Patentee claims, or has previously claimed, small entity status. See 37 CFR 1.27.

LOSS OF ENTITLEMENT TO SMALL ENTITY STATUS
☐ Patentee is no longer entitled to small entity status. See 37 CFR 1.27(g)

NOT Small Entity		Small Entity	
Fee	Code	Fee	Code
○ 3 ½ year	(1551)	◉ 3 ½ year	(2551)
○ 7 ½ year	(1552)	○ 7 ½ year	(2552)
○ 11 ½ year	(1553)	○ 11 ½ year	(2553)

SURCHARGE
The surcharge required by 37 CFR 1.20(i)(2) (Fee Code 1558) must be paid as a condition of accepting unintentionally delayed payment of the maintenance fee.

MAINTENANCE FEE (37 CFR 1.20(e)-(g))
The appropriate maintenance fee must be submitted with this petition.

STATEMENT
THE UNDERSIGNED CERTIFIES THAT THE DELAY IN PAYMENT OF THE MAINTENANCE FEE TO THIS PATENT WAS UNINTENTIONAL

PETITIONER(S) REQUEST THAT THE DELAYED PAYMENT OF THE MAINTENANCE FEE BE ACCEPTED AND THE PATENT REINSTATED

THIS PORTION MUST BE COMPLETED BY THE SIGNATORY OR SIGNATORIES

37 CFR 1.378(d) states: "Any petition under this section must be signed by an attorney or agent registered to practice before the Patent and Trademark Office, or by the patentee, the assignee, or other party in interest."

I certify, in accordance with 37 CFR 1.4(d)(4) that I am

◉ An attorney or agent registered to practice before the Patent and Trademark Office

○ A sole patentee

○ A joint patentee; I certify that I am authorized to sign this submission on behalf of all the other patentees.

○ A joint patentee; all of whom are signing this e-petition

○ The assignee of record of the entire interest

Patent Practitioner			
A signature of the applicant or representative is required in accordance with 37 CFR 1.33 and 10.18. Please see 37 CFR 1.4(d) for the form of the signature			
Signature	/Randolph E. Digges, III/	Date (YYYY-MM-DD)	2007-09-10
Name	Randolph E. Digges, III	Registration Number	40590

This collection of information is required by 37 CFR 1.378(c). The information is required to obtain or retain a benefit by the public which is to file (and by the USPTO to process) an application. Confidentiality is governed by 35 U.S.C. 122 and 37 CFR 1.11 and 1.14. This collection is estimated to take 1 hour to complete, including gathering, preparing, and submitting the completed application form to the USPTO. Time will vary depending upon the individual case. Any comments on the amount of time you require to complete this form and/ or suggestions for reducing this burden, should be sent to the Chief Information Officer, U.S. Patent and Trademark Office, U.S. Department of Commerce, P.O. Box 1450, Alexandria, VA 22313-1450. DO NOT SEND FEES OR COMPLETED FORMS TO THIS ADDRESS. **This form can only be used when in conjunction with EFS-Web. If this form is mailed to the USPTO, it may cause delays in reinstating the patent.**

Privacy Act Statement

The Privacy Act of 1974 (P.L. 93-579) requires that you be given certain information in connection with your submission of the attached form related to a patent application or patent. Accordingly, pursuant to the requirements of the Act, please be advised that: (1) the general authority for the collection of this information is 35 U.S.C. 2(b)(2); (2) furnishing of the information solicited is voluntary; and (3) the principal purpose for which the information is used by the U.S. Patent and Trademark Office is to process and/or examine your submission related to a patent application or patent. If you do not furnish the requested information, the U.S. Patent and Trademark Office may not be able to process and/or examine your submission, which may result in termination of proceedings or abandonment of the application or expiration of the patent.

The information provided by you in this form will be subject to the following routine uses:

1. The information on this form will be treated confidentially to the extent allowed under the Freedom of Information Act (5 U.S.C. 552) and the Privacy Act (5 U.S.C. 552a). Records from this system of records may be disclosed to the Department of Justice to determine whether the Freedom of Information Act requires disclosure of these record s.

2. A record from this system of records may be disclosed, as a routine use, in the course of presenting evidence to a court, magistrate, or administrative tribunal, including disclosures to opposing counsel in the course of settlement negotiations.

3. A record in this system of records may be disclosed, as a routine use, to a Member of Congress submitting a request involving an individual, to whom the record pertains, when the individual has requested assistance from the Member with respect to the subject matter of the record.

4. A record in this system of records may be disclosed, as a routine use, to a contractor of the Agency having need for the information in order to perform a contract. Recipients of information shall be required to comply with the requirements of the Privacy Act of 1974, as amended, pursuant to 5 U.S.C. 552a(m).

5. A record related to an International Application filed under the Patent Cooperation Treaty in this system of records may be disclosed, as a routine use, to the International Bureau of the World Intellectual Property Organization, pursuant to the Patent Cooperation Treaty.

6. A record in this system of records may be disclosed, as a routine use, to another federal agency for purposes of National Security review (35 U.S.C. 181) and for review pursuant to the Atomic Energy Act (42 U.S.C. 218(c)).

7. A record from this system of records may be disclosed, as a routine use, to the Administrator, General Services, or his/her designee, during an inspection of records conducted by GSA as part of that agency's responsibility to recommend improvements in records management practices and programs, under authority of 44 U.S.C. 2904 and 2906. Such disclosure shall be made in accordance with the GSA regulations governing inspection of records for this purpose, and any other relevant (i.e., GSA or Commerce) directive. Such disclosure shall not be used to make determinations about individuals.

8. A record from this system of records may be disclosed, as a routine use, to the public after either publication of the application pursuant to 35 U.S.C. 122(b) or issuance of a patent pursuant to 35 U.S.C. 151. Further, a record may be disclosed, subject to the limitations of 37 CFR 1.14, as a routine use, to the public if the record was filed in an application which became abandoned or in which the proceedings were terminated and which application is referenced by either a published application, an application open to public inspections or an issued patent.

9. A record from this system of records may be disclosed, as a routine use, to a Federal, State, or local law enforcement agency, if the USPTO becomes aware of a violation or potential violation of law or regulation.

UNITED STATES PATENT AND TRADEMARK OFFICE

UNITED STATES DEPARTMENT OF COMMERCE
United States Patent and Trademark Office
Address: COMMISSIONER FOR PATENTS
P.O. Box 1450
Alexandria, Virginia 22313-1450
www.uspto.gov

APPLICATION NO.	FILING DATE	FIRST NAMED INVENTOR	ATTORNEY DOCKET NO.	CONFIRMATION NO.
09/764,001	01/17/2001	John Wilhelm Geus	VER-110AX	3521

207 7590 06/18/2004

WEINGARTEN, SCHURGIN, GAGNEBIN & LEBOVICI LLP
TEN POST OFFICE SQUARE
BOSTON, MA 02109

EXAMINER
LANGEL, WAYNE A

ART UNIT	PAPER NUMBER
1754	

DATE MAILED: 06/18/2004

Please find below and/or attached an Office communication concerning this application or proceeding.

UNITED STATES PATENT AND TRADEMARK OFFICE

Technology Center 1700

Mailed: APR 9 2004

rvk
Paper No. 23

In re application of:
John Geus et al
Serial No.: 09/764,001
Filed: January 17, 2001
For: CATALYST AND METHOD FOR THE SELECTIVE OXIDATION OF SULFUR COMPOUNDS TO ELEMENTAL SULFUR

DECISION ON PETITION

This is a decision to the PETITION TO WITHDRAW ABANDONMENT, filed November 24, 2003. The petition requests that the abandonment, as set forth in the Notice of Abandonment of November 05, 2003, for failure to timely file a Notice of Appeal (i.e. a proper response to the Office letter dated February 27, 2003). The petitioner asserts that applicants timely filed a Request for Continued Examination (RCE) together with a Petition for Extension of Time and a Request for Suspension of Action on June 24, 2003.

DECISION

The instant request is accepted as a timely petition under 37 C.F.R. 1.181 (no fee).

A review of the petitioner's evidence provided with the instant petition indicates that the request has merit. The evidence presented is sufficient to establish that the applicants did indeed file the proper response to the Office letter of February 27, 2003 in a timely manner. The submitted evidence are copies of a Request For Continued Examination, a Petition for Extension of Time for one month and a Request for Suspension of Action by facsimile on June 24, 2003 and a copy of the Auto-Reply Facsimile Transmission indicating receipt by the USPTO on June 24, 2003.

Therefore, the Notice of Abandonment is hereby withdrawn. Hence, the case is returned to pending status. The application will be forwarded to the Technical Support Staff for processing the RCE and the Request for Suspension of Action filed June 24, 2003.

The Petition is **GRANTED**.

J Moore

Jacqueline Stone, Director
Technology Center 1700
Chemical and Materials Engineering

WEINGARTEN, SCHURGIN, GAGNEBIN & LEBOVICI LLP
TEN POST OFFICE SQUARE
BOSTON, MA 02109

#3
Pet. Denied

UNITED STATES DEPARTMENT OF COMMERCE
Patent and Trademark Office
Address: COMMISSIONER OF PATENTS AND TRADEMARKS
Washington, D.C. 20231

SERIAL NUMBER	FILING DATE	FIRST NAMED APPLICANT	ATTORNEY DOCKET NO.
09/764,004	**25-Apr-01**	**EARL M. ORTT**	**0275D-299CPA**

Title: ANCHORING SYSTEM FOR INJECTION MOLDED MAGNETS ON A FLUX RING OR MOTOR HOUSING

Art Unit	Paper Number

Correspondence Address:
W. R. DUKE TAYLOR
HARNESS, DICKEY & PIERCE
P. O. BOX 828
BLOOMFIELD HILLS, MI. 48303

PATENT & TRADEMARK OFFICE
RECEIVED
NOV - 2 2001
LICENSING & REVIEW

Please find attached a communication from the Examiner regarding the Petition for Retroactive License under 37 CFR 5.25.

2001

UNITED STATES DEPARTMENT OF COMMERCE
Patent and Trademark Office

Address: COMMISSIONER OF PATENTS AND TRADEMARKS
Washington, D.C. 20231

In re:	Earl M. Ortt	: DECISION ON REQUEST FOR
Serial No:	09/764,004	: RETROACTIVE LICENSE UNDER
Filed:	January 17, 2001	: 37 CFR 5.25
Docket:	0275D-299CP	

Title: ANCHORING SYSTEM FOR INJECTION MOLDED MAGNETS ON A FLUX RING OR MOTOR HOUSING

This is in response to the petition filed 25 April 2001 for a retroactive license.

37 CFR 5.25 requires the following:

(1) A listing of each of the foreign countries in which the unlicensed patent application material was filed.

(2) The dates on which the material was filed in each country,

(3) A verified statement (oath or declaration) containing:

(i) An averment that the subject matter in question was not under a secrecy order at the time it was filed abroad, and that it is not currently under a secrecy order,

(ii) A showing that the license has been diligently sought after discovery of the proscribed foreign filing, and

(iii) An explanation of why the material was filed abroad through error and without deceptive intent without the required license under § 5.11 first having been obtained, and

(4) The required fee (§ 1.17(h)).

The petition is Denied at this time in that the petition is defective in that the requirements set forth in 37 C.F.R 5.25 (a)(3)(iii) have not been satisfied.

Specifically, Affiant Mary Harmon avers that she was unaware that a foreign filing license was not obtained prior to filing the foreign patent applications. However, this does not suffice as a proscribed foreign filing since the circumstances surrounding the error are unclear without the full context of what normal procedures are, i.e., who is responsible for obtaining the license, what steps are taken to insure that a license is obtained prior to a foreign filing, etc. If outside counsel, W. R. Duke Taylor, Harness, Dickey & Pierce, P.L.C. were responsible for obtaining such a license, then it is incumbent that a verified statement, setting forth the facts, from such counsel be part of the retroactive license request.

Accordingly, the provisions of 37 CFR 5.25 having not been fully met, the petition is denied, and in the absence of any response within 60 days of the mailing data of this letter, such denial will be made final and the final action under 35 USC 185 will be taken. Extensions of time may be had under 37 C.F.R. 1.136(a).

Ian J. Lobo
Patent Examiner
Special Laws and Administration, Group 3600
(703) 306-4161

UNITED STATES DEPARTMENT OF COMMERCE
Patent and Trademark Office
Address: COMMISSIONER OF PATENTS AND TRADEMARKS
Washington, D.C. 20231

SERIAL NUMBER	REQUEST DATE	FIRST NAMED APPLICANT	ATTORNEY DOCKET NO.
09/764,004	**4/25/01**	**EARL M. ORTT**	**0275D-299CPA**

Title: **ANCHORING SYSTEM FOR INJECTION MOLDED MAGNETS ON FLUX RING OR MOTOR HOUSING**

Art Unit	Paper Number

Correspondence Address:
W. R. DUKE TAYLOR
HARNESS, DICKEY & PIERCE
P. O. BOX 828
BLOOMFIELD HILLS, MI. 48303

PATENT & TRADEMARK OFFICE
MAILED
AUG - 2 2002
LICENSING & REVIEW

Licensee under 35 U.S.C. 184 is hereby granted to file in any foreign country a patent application and any amendments thereto corresponding to the subject matter of this U.S. application identified above and/or any material accompanying the petition. This license is conditioned upon modification of any applicable secrecy order and is subject to revocation without notice.

License Number: 529,277

Grant Date: 02-Aug-02

This license is granted retroactively to the date(s) and the country(s) indicated on the attached decision.

Approved

for Commissioner of Patents and Trademar

This license empowers the filing, the causation and the authorization of the filing of a foreign application or applications on the subject matter identified above, subsequent forwarding of all duplicate and formal papers and the prosecution of such aplication or applications.

This license is granted under 37 CFR 5.15(a).

This license is to be retained by the licensee and may be used at anytime on or after the date thereof. This license is not retroactive unless specifically indicated.

The grant of this license does not in any way lesson the responsibility of the licensee for the security of the subject matter as imposed by any Government contract or the provisions of existing laws relating to espionage and the national security or the export of technical data. Licensees should apprise themselves of current regulations, especially with respecct to certain countries, of other agencies, particularly the Department of the Treasury; Office of Munitions Control, Department of State (with respect to Arms, Munitions and Implements of War); the Bureau of Trade Regulation, Office of Export Adminstration, Department of Commerce; and the Department of Energy.

LICENSE FOR FOREIGN FILING

[Title 35, United States Code (1952) Sections 184, 185, 186]

UNITED STATES PATENT AND TRADEMARK OFFICE

UNDER SECRETARY OF COMMERCE FOR INTELLECTUAL PROPERTY AND
DIRECTOR OF THE UNITED STATES PATENT AND TRADEMARK OFFICE
WASHINGTON, DC 20231
www.uspto.gov

W. R. DUKE TAYLOR
HARNESS, DICKEY & PIERCE
P. O. BOX 828
BLOOMFIELD HILLS, MI. 48303

In re:	Earl M. Ortt	:	DECISION ON REQUEST
Serial No.:	09/764,004	:	UNDER 37 CFR 5.25
Filing date:	Jan. 17, 2001		
Docket No:	0275D-299CP		

Title: ANCHORING SYSTEM FOR INJECTION MOLDED MAGNETS ON A FLUX RING OR MOTOR HOUSING

In view of the communication(s) filed July 25, 2002, it has been determined that a retroactive license for foreign filing under 35 U.S.C. 184 be granted with respect to the filings listed below. The petition complies with 37 C.F.R. 5.25 in that there is an adequate showing that the subject matter in question was not under secrecy order, that the license was diligently sought after discovery of the proscribed foreign filing, and that the material was filed abroad without the required license under 37 C.F.R. 5.11 first having been obtained through error and without deceptive intent.

Country	Date
Taiwan	Jan. 19, 2001
China	Jan. 19, 2001
Switzerland	Jan. 26, 2001
Germany	Jan. 26, 2001
EPO	Jan. 26, 2001

Approved:

Ian J. Lobo
Patent Examiner
Group 3600
(703) 306-4161

UNITED STATES PATENT AND TRADEMARK OFFICE

Commissioner for Patents
United States Patent and Trademark Office
P.O. Box 1450
Alexandria, VA 22313-1450
www.uspto.gov

HARNESS DICKEY & PIERCE PLC
PO BOX 828
BLOOMFIELD HILLS MI 48303

COPY MAILED

MAR 17 2006

OFFICE OF PETITIONS

In re Application of
Earl M. Ortt :
Application No. 09/764,004 : DECISION ON
Filed: January 17, 2001 : PETITION
Attorney Docket No. 02750-000299/CPA :

This is in response to the petition, filed November 14, 2003, to revive an unintentionally abandoned application under 37 CFR 1.137(b). The petition was recently forwarded to the Office of Petitions for consideration.

The petition under 37 CFR 1.137(b) is **GRANTED**.

The above-identified application became abandoned for failure to timely pay the issue fee as required by the Notice of Allowance mailed on February 7, 2003. This notice set a statutory period for reply of three months. No issue fee having been received, the above-identified application became abandoned on May 8, 2003. A Notice of Abandonment was mailed on August 27, 2003.

With the instant petition, petitioner paid the petition fee together with the issue fee, and made the proper statement of unintentional delay.

The application is being forwarded to the Office of Patent Publication for processing into a patent.

Telephone inquiries related to this decision should be directed to the undersigned at (571)272-3207.

Cliff Congo
Petitions Attorney
Office of Petitions

UNITED STATES PATENT AND TRADEMARK OFFICE

COMMISSIONER FOR PATENTS
UNITED STATES PATENT AND TRADEMARK OFFICE
WASHINGTON, DC 20231
www.uspto.gov

Paper No. 10

SKJERVEN MORRILL LLP
25 METRO DRIVE
SUITE 700
SAN JOSE CA 95110

MAILED

MAR 1 3 2003

Technology Center 2600

In re Application Serial No.:

09/764,026

ON REQUEST TO
WITHDRAW AS ATTORNEY

It is noted that a first petition filed October 31, 2002 has an improper Correspondence Address, therefore the first petition is dismissed in favor of the second petition filed December 24, 2002 which has been provided with the proper new Correspondence Address.

The Request to Withdraw as Attorney is **GRANTED**.

Further communications will be directed to the address listed below until such a time as applicant properly notifies the Patent and Trademark Office of a change of address. This address has been provided by the withdrawing attorney(s).

Krista Zele
Special Program Examiner
Technology Center 2600
Communications
(703) 305-4701

cc: Alan MacPherson
MacPherson Kwok Chen & Heid LLP
2001 Gateway Place, Suite 195
San Jose, CA 95110

UNITED STATES PATENT AND TRADEMARK OFFICE

Commissioner for Patents
United States Patent and Trademark Office
P.O. Box 1450
Alexandria, VA 22313-1450
www.uspto.gov

STEVEN I. WEISBURD
DICKSTEIN SHAPIRO MORIN & OSHINSKY
1177 AVENUE OF THE AMERICAS
41ST FLOOR
NEW YORK NY 10036-2714

COPY MAILED

JUL 16 2004

OFFICE OF PETITIONS

In re Application of	:	
Masayuki Atokawa et al	:	
Application No. 09/764,046	:	ON PETITION
Filed: January 17, 2001	:	
Attorney Docket No. P/1071-1244	:	

This is a decision on the petition, filed July 15, 2004, under 37 CFR 1.313(c)(2) to withdraw the above-identified application from issue after payment of the issue fee.

The petition is **GRANTED.**

The above-identified application is withdrawn from issue for consideration of a submission under 37 CFR 1.114 (request for continued examination). See 37 CFR 1.313(c)(2).

Petitioner is advised that the issue fee paid on July 2, 2004 in the above-identified application cannot be refunded. If, however, the above-identified application is again allowed, petitioner may request that it be applied towards the issue fee required by the new Notice of Allowance.[1]

Telephone inquiries should be directed to the undersigned at (703) 305-8859.

The examiner of Technology Center AU 2817 will consider the request for continued examination under 37 CFR 1.114.

Karen Creasy

Karen Creasy
Petitions Examiner
Office of Petitions
Office of the Deputy Commissioner
for Patent Examination Policy

---

[1] The request to apply the issue fee to the new Notice may be satisfied by completing and returning the new Issue Fee Transmittal Form PTOL-85(b), which includes the following language thereon: "Commissioner for Patents is requested to apply the Issue Fee and Publication Fee (if any) or re-apply any previously paid issue fee to the application identified above." Petitioner is advised that, whether a fee is indicated as being due or not, the Issue Fee Transmittal Form **must** be completed and timely submitted to avoid abandonment. Note the language in bold text on the first page of the Notice of Allowance and Fee(s) Due (PTOL-85).

UNITED STATES PATENT AND TRADEMARK OFFICE

Commissioner for Patents
United States Patent and Trademark Office
P.O. Box 1450
Alexandria, VA 22313-1450
www.uspto.gov

SUGHRUE MION ZINN MacPEAK & SEAS
2100 PENNSYLVANIA AVENUE NW
WASHINGTON, DC 20037

COPY MAILED

OCT 28 2005

OFFICE OF PETITIONS

In re Application of	:
Masahiko Miyashita et al	:
Application No. 09/764,083	: DECISION GRANTING PETITION
Filed: January 19, 2001	: UNDER 37 CFR 1.313(c)(2)
Attorney Docket No. Q62754	:

This is a decision on the petition, filed October 26, 2005, under 37 CFR 1.313(c)(2) to withdraw the above-identified application from issue after payment of the issue fee.

The petition is **GRANTED**.

The above-identified application is withdrawn from issue for consideration of a submission under 37 CFR 1.114 (request for continued examination). See 37 CFR 1.313(c)(2).

Petitioner is advised that the issue fee paid on September 19, 2005 in the above-identified application cannot be refunded. If, however, the above-identified application is again allowed, petitioner may request that it be applied towards the issue fee required by the new Notice of Allowance.[1]

Telephone inquiries should be directed to the undersigned at (571) 272-3218.

This matter is being referred to Technology Center AU 2616 for processing of the request for continued examination under 37 CFR 1.114 and for consideration of the Information Disclosure Statement.

Frances Hicks
Petitions Examiner
Office of Petitions

---

[1] *The request to apply the issue fee to the new Notice may be satisfied by completing and returning the new Issue Fee Transmittal Form PTOL-85(b) (along with any balance due or the amount due at the time of payment), which includes the following language thereon: "Commissioner for Patents is requested to apply the Issue Fee and Publication Fee (if any) or re-apply any previously paid issue fee to the application identified above." Petitioner is advised that, whether a fee is indicated as being due or not, the Issue Fee Transmittal Form* ***must*** *be completed and timely submitted to avoid abandonment. Note the language in bold text on the first page of the Notice of Allowance and Fee(s) Due (PTOL-85).*

SPE RESPONSE FOR CERTIFICATE OF CORRECTION 7057999 B2

Paper No.: _____

DATE : 1/29/07

TO SPE OF : ART UNIT 2627

SUBJECT : Request for Certificate of Correction for Appl. No.: 9/764158 Patent No.: 7057999B2

Please respond to this request for a certificate of correction within 7 days.

Please review the requested changes/corrections as shown in the **COCIN** document(s) in the IFW application image. No new matter should be introduced, nor should the scope or meaning of the claims be changed.

Please complete the response (see below) and forward the completed response to scanning using document code **COCX**.

Virginia Tolbert
Certificates of Correction Branch

703-308-9390 ext. 113

Thank You For Your Assistance

The request for issuing the above-identified correction(s) is hereby:
Note your decision on the appropriate box.

- [X] **Approved** — **All** changes apply.
- [ ] **Approved in Part** — Specify below which changes **do not** apply.
- [ ] **Denied** — State the reasons for denial below.

Comments: _____

ALI NEYZARI
PRIMARY PATENT EXAMINER
2-8-07

SPE

2627
Art Unit

2/16/07

UNITED STATES PATENT AND TRADEMARK OFFICE

COMMISSIONER FOR PATENTS
UNITED STATES PATENT AND TRADEMARK OFFICE
P.O. BOX 1450
ALEXANDRIA, VA 22313-1450
www.uspto.gov

Paper No. 7

NAVAL RESEARCH LABORATORY
CODE 1008.2
4555 OVERLOOK AVE., SW
WASHINGTON, DC 20375-5320

COPY MAILED
NOV 21 2003
OFFICE OF PETITIONS

In re Application of	:	
Lynn K. Kurihara et al	:	
Application No. 09/764,161	:	ON PETITION
Filed: January 19, 2001	:	
Attorney Docket No. N.C. 80,242	:	

This is a decision on the petition under 37 CFR 1.137(b), filed November 10, 2003, to revive the above-identified application.

The petition is **GRANTED**.

The above-identified application became abandoned for failure to reply in a timely manner to the Notice to File Missing Parts of Application (Notice) mailed March 26, 2001. The Notice set a period for reply of two (2) months from the mail date of the Notice. No extensions of time under the provisions of 37 CFR 1.136(a) were obtained. Accordingly, the above-identified application became abandoned on May 27, 2001.

Telephone inquiries concerning this decision should be directed to Wan Laymon at (703) 305-9282.

The application file is being forwarded to the Office of Initial Patent Examination.

Wan Laymon

Wan Laymon
Petitions Examiner
Office of Petitions
Office of the Deputy Commissioner
for Patent Examination Policy

UNITED STATES PATENT AND TRADEMARK OFFICE

Commissioner for Patents
United States Patent and Trademark Office
Washington, D.C. 20231
www.uspto.gov

Paper No. 7

MARK J. BURNS
HAUGEN LAW FIRM PLLP
1130 TCF TOWER
121 SOUTH EIGHTH STREET
MINNEAPOLIS MN 55402

COPY MAILED

JUL 2 2 2002

OFFICE OF PETITIONS

In re Application of Michael Z. VanErdewyk Application No. 09/764,175 Filed: January 17, 2001 Attorney Docket No. 2000-0755.ORI	DECISION GRANTING PETITION UNDER 37 CFR 1.137(f)

This is a decision on the petition, filed June 19, 2002, to revive the instant nonprovisional application under the unintentional provisions of 37 CFR 1.137(f).

The petition is **GRANTED**.

Petitioner states that the instant nonprovisional application is the subject of an application filed in a foreign country on January 17, 2002. However, the U.S. Patent and Trademark Office was unintentionally not notified of this filing within 45 days subsequent to the filing of the subject application in a foreign country.

In view of the above, this application became abandoned pursuant to 35 U.S.C. § 122(b)(2)(B)(iii) and 37 CFR 1.213(c) for failure to timely notify the Office of the filing of an application in a foreign country, or under a multilateral international agreement, that requires publication of applications 18 months after filing.

A petition under 37 CFR 1.137(f) must be accompanied by:

(1) the reply which is met by the notification of such filing in a foreign country or under a multinational treaty;

(2) the petition fee as set forth in 37 CFR 1.17(m); and

(3) a statement that the entire delay in filing the required reply from the due date of the reply until the filing of a grantable petition was unintentional.

The instant petition has been found to be in compliance with 37 CFR 1.137(f). Accordingly, the failure to timely notify the Office of a foreign or international filing within 45 days after the date of filing of such foreign or international application as provided by 35 U.S.C. § 122(b)(2)(B)(iii) and 37 CFR 1.213(c) is accepted as having been unintentionally delayed.

The previous Request and Certification under 35 U.S.C. § 122(b)(2)(B)(i) has been rescinded. A Corrected Filing Receipt which sets forth the projected publication date of October 31, 2002 accompanies this decision on petition.

Any inquiries concerning this decision may be directed to the undersigned at (703) 305-8680.

This application is being forwarded to Technology Center Art Unit 1744 for examination in due course.

Frances Hicks

Frances Hicks
Petitions Examiner
Office of Petitions
Office of the Deputy Commissioner
for Patent Examination Policy

ATTACHMENT: Corrected Filing Receipt

UNITED STATES PATENT AND TRADEMARK OFFICE

COMMISSIONER FOR PATENTS
UNITED STATES PATENT AND TRADEMARK OFFICE
WASHINGTON, D.C. 20231
www.uspto.gov

KM:09-01

Paper No. 7

JOHN G. RAUCH
BRINKS HOFER GILSON & LIONE
P.O. BOX 10395
CHICAGO, IL 60610

COPY MAILED

SEP 27 2001

OFFICE OF PETITIONS

In re Application of:
Rafie, et al.
Application No. 09/764,202
Filed: 17 January, 2001
Attorney Docket No. 10506/3

ON PETITION

This is in response to the petition under 37 C.F.R. §1.47(b)[1] filed herein on 23 July, 2001, and treated as a petition under 37 C.F.R. §1.47(a).

The petition is **DISMISSED**.

Any request for reconsideration of this decision must be submitted within TWO (2) MONTHS from the mail date of this decision. Extensions of time under 37 C.F.R. §1.136(a) are permitted. Any response should be entitled "Request for Reconsideration of Petition Under 37 C.F.R. §1.47(a)" and may include an oath or declaration executed by the inventor.

Failure to respond will result in abandonment of the application.

---

[1] The regulations at 37 C.F.R. 1.47 provide:

§ 1.47 Filing when an inventor refuses to sign or cannot be reached.

(a) If a joint inventor refuses to join in an application for patent or cannot be found or reached after diligent effort, the application may be made by the other inventor on behalf of himself or herself and the nonsigning inventor. The oath or declaration in such an application must be accompanied by a petition including proof of the pertinent facts, the fee set forth in §1.17(h), and the last known address of the nonsigning inventor. The nonsigning inventor may subsequently join in the application by filing an oath or declaration complying with §1.63.

(b) Whenever all of the inventors refuse to execute an application for patent, or cannot be found or reached after diligent effort, a person to whom an inventor has assigned or agreed in writing to assign the invention, or who otherwise shows sufficient proprietary interest in the matter justifying such action, may make application for patent on behalf of and as agent for all the inventors. The oath or declaration in such an application must be accompanied by a petition including proof of the pertinent facts, a showing that such action is necessary to preserve the rights of the parties or to prevent irreparable damage, the fee set forth in §1.17(h), and the last known address of all of the inventors. An inventor may subsequently join in the application by filing an oath or declaration complying with §1.63.

(c) The Office will send notice of the filing of the application to all inventors who have not joined in the application at the address(es) provided in the petition under this section, and publish notice of the filing of the application in the *Official Gazette*. The Office may dispense with this notice provision in a continuation or divisional application, if notice regarding the filing of the prior application was given to the nonsigning inventor(s).

[47 Fed. Reg. 41275, Sept. 17, 1982, effective Oct. 1, 1982; 48 Fed. Reg. 2709, Jan. 20, 1983, effective Feb. 27, 1983; revised, 62 Fed. Reg. 53131, Oct. 10, 1997, effective Dec. 1, 1997; revised, 65 Fed. Reg. 54604, Sept. 8, 2000, effective Nov. 7, 2000]

BACKGROUND

The record indicates that:

- this application was filed on 17 January, 2001, without an oath or declaration;
- a Notice to File Missing Parts of Nonprovisional Application was mailed on 27 April, 2001, requiring an executed oath or declaration, and the surcharge set forth in 37 C.F.R. §1.16(e);
- a declaration executed by Inventors Rafie, Hwang, and Lu, the required surcharge, and a petition with attachments were filed on 23 July, 2001.

ANALYSIS

Petitioner has failed to:

- provide the last known address for Tushar Shah;
- establish that the inventor has been presented with the full application and has refused to sign the declaration (the proof of the pertinent events must be made by a statement of someone with first hand knowledge of the events with support of the registered practitioner prosecuting this matter) or cannot be reached.

A copy of the application papers must be sent to the last known address of the non-signing inventor with a request that he/she sign the declaration for the patent application. A forwarding address should be requested, if the papers are returned, and other attempts to locate the inventor, e.g. through e-mail or the telephone, continue to fail, then applicant will have established that the inventor cannot be reached. Alternatively, an oath or declaration for the patent application in compliance with 37 C.F.R. §§1.63 and 1.64 must be presented. The declaration must set forth the inventor's residence, citizenship and post office address.

The statement of fact of Richard Silverstein states that correspondence was forwarded to Mr. Shah's current place of employment and to Mr. Shah's attorney, and that he received signed acknowledgments of receipt of the correspondence. However, the statement does not specify what documents

were included in the correspondence. Further, delivery of the correspondence to an employer and attorney does not establish that the correspondence was sent or given to the non-signing inventor.

The summary of the meeting between Josef Berger and Andrew Fine on 14 May, 2001, given by Mr. Silverstein in his statement, is insufficient to establish that the non-signing inventor orally refused to sign the declaration, because there is no evidence on the record that Mr. Berger, Mr. Fine, or Mr. Silverstein have first-hand knowledge of the refusal of Mr. Shah to sign the declaration.

Further correspondence with respect to this matter should be addressed as follows:

By mail: Commissioner of Patents and Trademarks
Box DAC
Washington, D.C. 20231

By FAX: (703) 308-6916
Attn: Office of Petitions

By hand: Crystal Plaza Four, Suite CP4-3C23
2201 South Clark Place
Arlington, VA 22202

Telephone inquiries concerning this matter may be directed to Kathy Matecki at (703) 305-1645.

John J. Gillon, Jr.
Attorney
Office of Petitions
Office of the Deputy Commissioner
for Patent Examination Policy

UNITED STATES PATENT AND TRADEMARK OFFICE

COMMISSIONER FOR PATENTS
UNITED STATES PATENT AND TRADEMARK OFFICE
WASHINGTON, D.C. 20231
www.uspto.gov

Paper No. 7

GRAY CARY WARE & FREIDENRICH LLP
1755 EMBARCADERO ROAD
PALO ALTO, CA 94303-3340

COPY MAILED

FEB 2 5 2003

OFFICE OF PETITIONS

In re Application of :
Vincent Marinkovich :
Application No. 09/764,224 :
Filed: January 16, 2001 :
Attorney Docket No. 1130295-900111 :

ON PETITION

This is a decision on the petition under 37 CFR 1.137(b), filed January 21, 2003, to revive the above-identified application.

The petition is **GRANTED**.

The above-identified application became abandoned for failure to reply in a timely manner to the Notice to File Missing Parts of Nonprovisional Application mailed March 29, 2001. The Notice set a period for reply of two (2) months from the mail date of the Notice. No extensions of time under the provisions of 37 CFR 1.136(a) were obtained. Accordingly, the above-identified application became abandoned on May 30, 2001.

The Power of Attorney and Change of Correspondence Address has been accepted and recorded.

Telephone inquiries concerning this decision should be directed to the undersigned at (703) 306-5594.

The application file is being forwarded to the Office of Initial Patent Examination for further processing.

Retta Williams

Retta Williams
Petitions Examiner
Office of Petitions
Office of the Deputy Commissioner
for Patent Examination Policy

UNITED STATES PATENT AND TRADEMARK OFFICE

COMMISSIONER FOR PATENTS
UNITED STATES PATENT AND TRADEMARK OFFICE
WASHINGTON, D.C. 20231
www.uspto.gov

Paper No. 5

DOCKET ADMINISTRATOR (ROOM 3C-512)
LUCENT TECHNOLOGIES INC.
600 MOUNTAIN AVENUE
P.O. BOX 636
MURRAY HILL, NJ 07974-0636

COPY MAILED

AUG 1 0 2001

OFFICE OF PETITIONS

In re Application of
Thomas C. Bressoud, et al.
Application No. 09/764,247
Filed: January 17, 2001
Attorney Docket No. 1-1-1-1

ON PETITION

This is a decision on the petition under 37 CFR 1.182, filed April 9, 2001, to change the order of the names of the inventors.

The petition is granted.

The order of the names of the inventors has been changed as follows:

1. Thomas C. Bressoud
2. Lorenzo Alvisi
3. Ayman M. El-Khashab
4. Phoebe K. Weidmann

Telephone inquires related to this decision should be directed to the undersigned at (703) 305-9220. Telephone inquiries related to OIPE processing should be directed to their hotline at (703) 308-1202.

This application is being returned to Initial Patent Examination Division (OIPE) for further processing using the declaration filed June 11, 2001.

Sherry D. Brinkley
Petitions Examiner
Office of Petitions
Office of the Deputy Commissioner
for Patent Examination Policy

UNITED STATES PATENT AND TRADEMARK OFFICE

UNITED STATES DEPARTMENT OF COMMERCE
United States Patent and Trademark Office
Address: COMMISSIONER FOR PATENTS
P.O. Box 1450
Alexandria, Virginia 22313-1450
www.uspto.gov

November 3, 2003

C. Irvin McClelland
Oblon, Spivak, McClelland,
Maier & Neustadt
1940 Duke St.
Alexandria, VA 22314

In re application of:
Takahiro Yoshikawa DECISION ON PETITION
Serial No.: 09/764,261
Filed: January 19, 2001
For: IMAGE FORMING APPARATUS

This is a decision on the petition received on April 1, 2003, to withdraw the holding of abandonment in the above-identified application.

The above-identified application became abandoned for failure to reply within the meaning of 37 C.F.R. 1.113 in timely manner to the Notice to File Missing Parts of Application mailed February 28, 2001. Which set a shortened statutory period for reply of two (2) months. Accordingly, this application became abandoned May 1, 2001.

On April 1, 2003, the office received a communication from the attorney of record. Enclosed was an acknowledgement that the attorney never received the Notice of Missing Parts mailed February 28, 2001.

The evidence submitted is sufficient to establish that the petitioners never received the Notice of Missing Parts mailed February 28, 2001.

The petition is hereby Granted.

Enclosed is a new Notice to File Missing Parts giving counsel 2 months from the date of the notice to respond.

The office regrets any inconvenience this may have caused the client.

Telephone inquiries concerning this matter may be directed to Doshie E. Day (703) 308-3640.

Doshie E. Day
Program Management Assistant
Office Initial Patent Examination

Enclosure: 1

UNITED STATES PATENT AND TRADEMARK OFFICE

UNITED STATES DEPARTMENT OF COMMERCE
United States Patent and Trademark Office
Address: COMMISSIONER FOR PATENTS
P.O. Box 1450
Alexandria, Virginia 22313-1450
www.uspto.gov

November 3, 2003

C. Irvin McClelland
Oblon, Spivak, McClelland,
Maier & Neustadt
1940 Duke St.
Alexandria, VA 22314

In re application of:
Takahiro Yoshikawa DECISION ON PETITION
Serial No.: 09/764,261
Filed: January 19, 2001
For: IMAGE FORMING APPARATUS

This is a decision on the petition received on April 1, 2003, to withdraw the holding of abandonment in the above-identified application.

The above-identified application became abandoned for failure to reply within the meaning of 37 C.F.R. 1.113 in timely manner to the Notice to File Missing Parts of Application mailed February 28, 2001. Which set a shortened statutory period for reply of two (2) months. Accordingly, this application became abandoned May 1, 2001.

On April 1, 2003, the office received a communication from the attorney of record. Enclosed was an acknowledgement that the attorney never received the Notice of Missing Parts mailed February 28, 2001.

The evidence submitted is sufficient to establish that the petitioners never received the Notice of Missing Parts mailed February 28, 2001.

The petition is hereby Granted.

Enclosed is a new Notice to File Missing Parts giving counsel 2 months from the date of the notice to respond.

The office regrets any inconvenience this may have caused the client.

Telephone inquiries concerning this matter may be directed to Doshie E. Day (703) 308-3640.

Doshie E. Day
Program Management Assistant
Office Initial Patent Examination

Enclosure: 1

UNITED STATES PATENT AND TRADEMARK OFFICE

COMMISSIONER FOR PATENTS
UNITED STATES PATENT AND TRADEMARK OFFICE
P.O. BOX 1450
ALEXANDRIA, VA 22313-1450
www.uspto.gov

Paper No. 16

PENROSE LUCA ALBRIGHT, ESQ.
MASON, MASON & ALBRIGHT
P.O. BOX 2246
ARLINGTON, VA 22202-0246

COPY MAILED

DEC 15 2003

OFFICE OF PETITIONS

In re Application of
Karel, Van Den Berg
Application No. 09/764,292
Filed: March 14, 2001
Attorney Docket No. 8553/206

ON PETITION

This is a decision on the petition under 37 C.F.R. § 1.137(b), filed November 26, 2003, to revive the above-identified application.

The petition is **granted.**

This application became abandoned for failure to timely reply within three months to the non-final Office action mailed March 27, 2002. A three month extension of time was submitted on September 27, 2002. Accordingly, this application became abandoned on September 28, 2002. A Notice of Abandonment was mailed on March 4, 2003.

Petitioner has met the requirements to revive the above-identified application pursuant to 37 CFR 1.137(b).

The file is now being forwarded to Technology Center 3600 for further examination on the merits.

Telephone inquiries should be directed to Paralegal Liana Chase at (703) 306-0482.

Karen Creasy

Karen Creasy
Petitions Examiner
Office of Petitions
Office of the Deputy Commissioner
for Patent Examination Policy

UNITED STATES PATENT AND TRADEMARK OFFICE

Commissioner for Patents
United States Patent and Trademark Office
P.O. Box 1450
Alexandria, VA 22313-1450
www.uspto.gov

HOWREY LLP-EU
C/O IP DOCKETING DEPARTMENT
2941 FAIRVIEW PARK DR., SUITE 200
FALLS CHURCH VA 22042

COPY MAILED

MAR 19 2009

OFFICE OF PETITIONS

In re Application of	:	
Van Den Berg Karel	:	
Application No. 09/764,292	:	NOTICE
Filed: March 14, 2001	:	
Attorney Docket No. 8553/206	:	

This is a notice regarding your request for acceptance of a fee deficiency submission under 37 CFR 1.28.

The Office no longer investigates or rejects original or reissue patent under 37 CFR 1.56. **1098 Off. Gaz. Pat. Office 502 (January 3, 1989)**. Therefore, nothing in this Notice is intended to imply that an investigation was done.

Your fee deficiency submission under 37 CFR 1.28 is hereby **ACCEPTED**.

This patent is no longer entitled to small entity status. Accordingly, all future fees paid in this patent must be paid at the large entity rate.

Inquiries related to this communication should be directed to Terri Williams at (571) 272-2991.

Chris Bottorff
Petitions Examiner
Office of Petitions

UNITED STATES PATENT AND TRADEMARK OFFICE

COMMISSIONER FOR PATENTS
UNITED STATES PATENT AND TRADEMARK OFFICE
WASHINGTON, D.C. 20231
www.uspto.gov

Paper No. 6

J. MICHAEL MARTINEZ DE ANDINO, ESQ.
HUNTON & WILLIAMS
RIVERFRONT PLAZA, EAST TOWER
951 EAST BYRD STREET
RICHMOND, VA 23219-4074

COPY MAILED

JUL 27 2001

OFFICE OF PETITIONS
A/C PATENTS

In re Application of
Jonathan Schull
Application No. 09/764,293
Filed: January 19, 2001
Attorney Docket No. 58587.000003

DECISION DISMISSING PETITION

This is a decision on the petition filed April 5, 2001, requesting that the above-identified application be accorded a filing date of January 19, 2001, with page 8 of the specification as part of the original disclosure.

On January 19, 2001, applicant filed the above-identified application. However, on February 15, 2001, the Office of Initial Patent Examination mailed a "Notice to File Corrected Application Papers" (Notice), stating that the application had been accorded a filing date of January 19, 2001, and requiring applicant to submit substitute drawings in compliance with 37 CFR 1.84. Additionally, the Notice advised applicant that page 8 of the specification appeared to have been omitted.

In response, on April 5, 2001, applicant filed, inter alia, the present petition, a $130.00 petition fee, and a copy of one (1) page of specification. Applicant explained:

> The present application is a continuation of application Serial No. 08/631,411, which was prepared by Applicant himself and filed on April 12, 1996. The specification of the '411 application included an uncaptioned figure in the body of the specification as page 8. Although submitted as a page of the specification, this page was not numbered. A separate drawing sheet was not submitted at the time of filing. When the present continuation application was filed, the filing papers included a copy of the parent application as-filed. This copy thus included the same un-numbered page 8. A separate copy of this page was also submitted as an informal drawing sheet.
>
> Based on the above, the Applicant submits that the present application as filed on January 19, 2001 was complete and was not missing a page as asserted in the Notice to File Corrected Application Papers. The Applicant therefore requests that the entire application be afforded a filing date of January 19, 2001.

Petition dated 04/05/01, p. 2.

It is obvious from the petition that page 8 of the specification was not actually missing on January 19, 2001. Rather, the page of specification was simply unlabeled as a result of applicant's filing error. However, the Notice to File Corrected Application Papers mailed February 15, 2001, was correct in stating that page 8 of the specification appeared to have been omitted. Therefore, the requirement for the submission of the omitted item set forth in the Notice was proper and will not be withdrawn.

Accordingly, the petition is dismissed.

The $130.00 petition fee will not be refunded because the present petition was not necessitated by any error on the part of the Office.

The application is being returned to the Office of Initial Patent Examination for further processing with a filing date of January 19, 2001, using the 28 pages of specification filed on that date.

Any inquiries related to this decision should be directed to Petitions Attorney Christina T. Tartera at (703) 306-5589.

Beverly M. Flanagan
Supervisory Petitions Examiner
Office of Petitions
Office of the Deputy Commissioner
for Patent Examination Policy

CTT

#11
DW

UNITED STATES PATENT AND TRADEMARK OFFICE

UNDER SECRETARY OF COMMERCE FOR INTELLECTUAL PROPERTY AND
DIRECTOR OF THE UNITED STATES PATENT AND TRADEMARK OFFICE
WASHINGTON, DC 20231
www.uspto.gov

MAR 13 2003

J. Michael Martinez de Andino
Hunton & Williams
Riverfront Plaza, East Tower
951 East Byrd Street
Richmond, VA 23219-4074

MAILED
MAR 13 2003
OFFICE OF THE DIRECTOR
TC 3600

In re application of
Jonathan Schull
Application No. 09/764,293 :
Filed: January 19, 2001 :
For: METHOD FOR ADAPTING A SOFTWARE PRODUCT TO AN ENVIRONMENT :

DECISION ON REQUEST FOR WITHDRAWAL OF ATTORNEY

This is a decision on the request filed on November 6, 2002, under 37 CFR 1.36 and MPEP 402.06, requesting permission to withdraw as the attorney of record in the above-identified application.

The request is **NOT APPROVED.**

Under 37 CFR 1.36 an attorney may withdraw only upon application to and approval by the Commissioner. It should be noted that a withdrawal is effective when approved, not when filed. Besides giving due notice to his or her client and delivering to the client all papers and property to which the client is entitled as specified under 37 CFR 10.40, approval of such a request requires that the following conditions be met:

A) Each attorney of record must sign the notice of withdrawal, or the notice must contain a clear indication of one attorney signing on behalf of another, because the Office does not recognize law firms;

B) A proper reason for the withdrawal as enumerated in 37 CFR 10.40(b) or subsection (1)-(6) of 37 CFR 10.40(c) must be provided; and

C) If withdrawal is requested in accordance with 37 CFR 10.40(c) above, there must be at least 30 days between approval of the withdrawal and the later of the expiration date of a time period for reply or the expiration date of the period which can be obtained by a petition and fee for extension of time under 37 CFR 1.136(a).

The request to withdraw as attorney is not accepted in the above-identified application because the request lacks condition B) above.

As to condition B), given the statement included in the request that, "SoftLock no longer has ownership rights in the application, and the assignee of those ownership rights refuses to grant or confirm our power to continue to prosecute the Application"; it is not clear that the statement satisfies one of the valid reasons for withdrawal under 37 CFR 10.40 (b)(1)-(4) or (c)(1)-(6). Simply because a company has filed for bankruptcy or the Trustee has indicated that he would not provide or confirm power of attorney, that does not automatically meet one of the acceptable reasons for an attorney withdrawal. Applicant's attorney is correct that the power of attorney is not automatically revoked by a change in ownership, but it is not agreed that the continued withholding of a new power of attorney (power which the current attorney already has) is tantamount to a revocation, nor is it grounds under 37 CFR 10.40 for withdrawal. Condition B) can be met by clearly specifying one of the valid reasons for withdrawal under 37 CFR 10.40 (b)(1)-(4) or (c)(1)-(6).

Steven N. Meyers
Special Programs Examiner
Patent Technology Center 3600
(703) 308-3868
(703) 605-0586 (facsimile)

SNM/tpl: 3/12/03

UNITED STATES PATENT AND TRADEMARK OFFICE

COMMISSIONER FOR PATENTS
UNITED STATES PATENT AND TRADEMARK OFFICE
P.O. BOX 1450
ALEXANDRIA, VA 22313-1450
www.uspto.gov

JAN - 6 2004

Paper No. 13

In re Application of
Shozo Oguri *et al*
Application No. 09/764,318
Filed: January 19, 2001
Attorney Docket No. 2001.0046A

: DECISION ON PETITION

This is a decision on the petition filed on November 28, 2003 by which petitioners request withdrawal of the examiner's holding that this application stands abandoned for failure to file a proper and timely reply to the Office action dated May 2, 2003. The petition is considered pursuant to 37 CFR 1.181, and no fee is required.

The petition is dismissed.

Petitioners allege that this application is not abandoned because a timely and proper reply to the Office letter in question was in fact filed on July 29, 2003, a date within the time set by the Office letter in question for filing a reply thereto. In support of this allegation, petitioners have supplied a copy of a post card receipt showing that an amendment and formal drawings were in fact filed in the Office on July 29, 2003.

Petitioner has not, however, furnished a copy of the reply (and formal drawings) filed on July 29, 2003. Absent a copy of the reply, it is not possible to determine whether the reply was in fact a proper reply to the Office letter in question. See 37 CFR 1.135(b). Accordingly, there is presently insufficient evidence bearing on the question of whether a timely and proper reply to the Office letter dated May 2, 2003 was in fact filed.

Petitioner may file a renewed petition to withdraw the holding of abandonment, without fee. The renewed petition must be filed within two months of the date of this Decision. See 37 CFR 1.181(f).

The application is being retained in Technology Center 3700 pending further action by petitioner.

PETITION DISMISSED.

E. Rollins-Cross, Director
Technology Center 3700

Wenderoth, Lind & Ponack, L.L.P.
2033 K Street N.W.
Suite 800
Washington, DC 20006-1021

UNITED STATES PATENT AND TRADEMARK OFFICE

COMMISSIONER FOR PATENTS
UNITED STATES PATENT AND TRADEMARK OFFICE
P.O. BOX 1450
ALEXANDRIA, VA 22313-1450
www.uspto.gov

MAR -2 2004

Paper No. 15

In re Application of
Shozo Oguri *et al*
Application No. 09/764,318
Filed: January 19, 2001
Attorney Docket No. 2001.0046A

: DECISION ON
: RENEWED PETITION

This is a decision on the renewed petition filed on January 13, 2004 by which petitioners again request withdrawal of the examiner's holding that this application stands abandoned for failure to file a proper and timely reply to the Office action dated May 2, 2003. The petition is considered pursuant to 37 CFR 1.181, and no fee is required.

The renewed petition is granted.

Petitioners again allege that this application is not abandoned because a timely and proper reply to the Office letter in question was in fact filed on July 29, 2003, a date within the time set by the Office letter in question for filing a reply thereto. In support of this renewed allegation, petitioners have now supplied a copy of the reply and a copy of formal drawings filed with the reply, together with a copy of a post card receipt as submitted with the original petition showing that the reply and the formal drawings were in fact filed in the Office on July 29, 2003.

Accordingly, the Notice of Abandonment is hereby vacated, the holding of abandonment is withdrawn, and the application is restored to pending status. The application is being forwarded to the examiner for action on the reply filed on July 29, 2003.

PETITION GRANTED.

E. Rollins-Cross, Director
Technology Center 3700

Wenderoth, Lind & Ponack, L.L.P.
2033 K Street N.W.
Suite 800
Washington, DC 20006-1021

UNITED STATES PATENT AND TRADEMARK OFFICE

COMMISSIONER FOR PATENTS
UNITED STATES PATENT AND TRADEMARK OFFICE
P.O. BOX 1450
ALEXANDRIA, VA 22313-1450
www.uspto.gov

Paper No. 13

MAILED

NOV 13 2003

Technology Center 2100

VAN PELT & YI LLP
10050 N. Foothill Blvd.
Suite 200
Cupertino, CA 95014

In re Application of Uri ZERNIK, et al Application No. 09/764,336 Filed: January 16, 2001 For: INTERFACE FOR PRESENTING INFORMATION	: : : : :	DECISION ON REQUEST FOR WITHDRAWAL AS ATTORNEY

This is a decision on the Request To Withdraw from Representation filed September 3, 2003.

A Revocation And Substitution Of Power Of Attorney Under 37 CFR § 1. 36 was filed on September 30, 2003. The Power Of Attorney revoked all prior Powers Of Attorney and appointed The Glenn Patent Group as the attorneys of record of the instant application. The Power Of Attorney of September 30, 2003 was accepted. Accordingly, all communications from the U.S. Patent and Trademark Office to applicant are to be conducted by Michael A. Glenn, et al.

For the above stated reasons, the request is **DISMISSED AS MOOT**.

No further communication to you regarding this application will be made.

For Vincent N. Trans
Special Programs Examiner
Technology Center 2100
Computer Architecture, Software and
Information Security
(703) 305-9750

cc: GLENN PATENT GROUP
3475 Edison Way
Suite L
Menlo Park, CA 94025

UNITED STATES PATENT AND TRADEMARK OFFICE

Commissioner for Patents
United States Patent and Trademark Office
P.O. Box 1450
Alexandria, VA 22313-1450
www.uspto.gov

JJGJR.: 06-06

Paper No:__

MORGAN LEWIS & BOCKIUS LLP
1111 PENNSYLVANIA AVENUE NW
WASHINGTON DC 20004

COPY MAILED

JUN 12 2006

OFFICE OF PETITIONS

In re Application of	:	
Muller, et al.	:	DECISION
Application No. 09/764,366	:	
Filing Date: 18 January, 2001	:	
Attorney Docket No.: 060967-0014	:	

This is a decision on the petition filed on 17 March, 2006, as a request for withdrawal of the holding of abandonment under 37 C.F.R. §1.181.

For the reasons set forth below, the petition as considered under 37 C.F.R. §1.181 is **DISMISSED**.

NOTES:

(1) Any petition (and fee) for reconsideration of this decision must be submitted within two (2) months from the mail date of this decision. Extensions of time under 37 C.F.R. §1.136(a) are permitted. The reconsideration request should include a cover letter entitled "Renewed Petition under 37 C.F.R. §1.181."

(It is noted, however, that Petitioner may be unable to present a satisfactory showing to support a petition under 37 C.F.R. §1.181, and Petitioner's only alternative will be to file a petition under 37 C.F.R. §1.137(b).)

(2) Thereafter, there will be no further reconsideration of this matter.

BACKGROUND

The record reflects that:

- Petitioner failed to reply timely and properly to the non-final Office action mailed 25 March, 2005, with reply due absent an extension of time on or before Monday, 27 June, 2005;
- the application went abandoned by operation of law after midnight 25 June, 2005;
- the Office mailed the Notice of Abandonment on 7 October, 2005;
- on Monday, 26 September, Petitioner filed the instant petition and alleged the timely filing of a reply in the form of an amendment filed over a 26 September, 2005, certificate of mailing (with request and fee for extension of time), and provided a copy thereof, with a portion of a date stamped receipt card (see: MPEP §503[1]);

---

[1] MPEP §503 provides in pertinent part:

§503 Application Number and Filing Receipt

* * *

A return postcard should be attached to *each* patent application for which a receipt is desired. It is important that the return postcard itemize all of the components of the application. If the postcard does not itemize each of the components of the application, it will not serve as evidence that any component which was not itemized was received by the United States Patent and Trademark Office (USPTO). It should be recognized that the identification of an application by application number does not necessarily signify that the USPTO has accepted the application as complete (37 C.F.R. §1.53(a)).

* * *

RETURN POSTCARD

If a receipt of any item (e.g., paper or fee) filed in the USPTO is desired, it may be obtained by enclosing with the paper a self-addressed postcard specifically identifying the item. The USPTO will stamp the receipt date on the postcard and place it in the outgoing mail. A postcard receipt which itemizes and properly identifies the items which are being filed serves as *prima facie* evidence of receipt in the USPTO of all the items listed thereon on the date stamped thereon by the USPTO.

The identifying data on the postcard should be so complete as to clearly identify the item for which receipt is requested. For example, the postcard should identify the applicant's name, application number (if known), confirmation number (if known), filing date, interference number, title of the invention, etc. The postcard should also identify the type of paper being filed, e.g., new application, affidavit, amendment, notice of appeal, appeal brief, drawings, fees, motions, supplemental oath or declaration, petition, etc., and the number of pages being submitted. If a new application is being filed, all parts of the application being submitted should be separately listed on the postcard, e.g., the number of pages of specification (including written description, claims and abstract), number of claims, number of sheets of drawings, number of pages of oath/declaration, number of pages of cover sheet (provisional application).

The postcard receipt will not serve as *prima facie* evidence of receipt of any item which is not adequately itemized on the postcard. For example, merely listing on the postcard "a complete application" or "patent application" will not serve as a proper receipt for each of the required components of an application (e.g., specification (including claims), drawings (if necessary), oath or declaration and the application filing fee) or missing portions (e.g., pages, sheets of drawings) of an application if one of the components or portion of a component is found to be missing by the USPTO. Each separate component should be specifically and properly itemized on the postcard. Furthermore, merely incorporating by reference in the postcard receipt, the items listed in a transmittal letter will not serve as *prima facie* evidence of receipt of those items.

The person receiving the item(s) in the USPTO will check the listing on the postcard against the item(s) being filed to be sure they are properly identified and that all the items listed on the postcard are presently being submitted to the USPTO. If any of the items listed on the postcard are not being submitted to the USPTO, those items will be crossed off and the post-card initialed by the person receiving the items. Upon return of a postcard receipt from the USPTO, the postcard receipt should be promptly reviewed by the person who filed the items to ensure that every item specifically denoted on the postcard was received by the USPTO. If the postcard receipt has been annotated to indicate that a particular item denoted on the postcard was not received by the USPTO, the postcard receipt will not serve as *prima facie* evidence of receipt of that item in the USPTO. (Emphasis supplied.)

- Petitioner's problem herein, however, is that Petitioner has ignored the requirement for pleading the instant petition within two (2) months of the act complained of[2]–failing satisfaction of the Rule, Petitioner's alternatives are petitions under 37 C.F.R. §1.137(a) or (b).

STATUTES, REGULATIONS AND ANALYSIS

Congress has authorized the Commissioner to "revive an application if the delay is shown to the satisfaction of the Commissioner to have been "unavoidable." 35 U.S.C. §133 (1994).[3]

The regulations at 37 C.F.R. §1.137(a) and (b) set forth the requirements for a petitioner to revive a previously unavoidably or unintentionally, respectively, abandoned application under this congressional grant of authority.

The language of 35 U.S.C. §133 and 37 C.F.R. §1.137(a) is clear, unambiguous, and without qualification: the delay in tendering the reply to the outstanding Office action, as well as filing

---

[2] The regulations at 37 C.F.R. §1.181 provide:

§ 1.181 Petition to the Director.
(a) Petition may be taken to the Director:
(1) From any action or requirement of any examiner in the *ex parte* prosecution of an application, or in *ex parte* or *inter partes* prosecution of a reexamination proceeding which is not subject to appeal to the Board of Patent Appeals and Interferences or to the court;
(2) In cases in which a statute or the rules specify that the matter is to be determined directly by or reviewed by the Director; and
(3) To invoke the supervisory authority of the Director in appropriate circumstances. For petitions involving action of the Board of Patent Appeals and Interferences, see § 41.3 of this title.
(b) Any such petition must contain a statement of the facts involved and the point or points to be reviewed and the action requested. Briefs or memoranda, if any, in support thereof should accompany or be embodied in the petition; and where facts are to be proven, the proof in the form of affidavits or declarations (and exhibits, if any) must accompany the petition.
(c) When a petition is taken from an action or requirement of an examiner in the *ex parte* prosecution of an application, or in the *ex parte* or *inter partes* prosecution of a reexamination proceeding, it may be required that there have been a proper request for reconsideration (§ 1.111) and a repeated action by the examiner. The examiner may be directed by the Director to furnish a written statement, within a specified time, setting forth the reasons for his or her decision upon the matters averred in the petition, supplying a copy to the petitioner.
(d) Where a fee is required for a petition to the Director the appropriate section of this part will so indicate. If any required fee does not accompany the petition, the petition will be dismissed.
(e) Oral hearing will not be granted except when considered necessary by the Director.
(f) The mere filing of a petition will not stay any period for reply that may be running against the application, nor act as a stay of other proceedings. Any petition under this part not filed within two months of the mailing date of the action or notice from which relief is requested may be dismissed as untimely, except as otherwise provided. This two-month period is not extendable.
(g) The Director may delegate to appropriate Patent and Trademark Office officials the determination of petitions.
[24 FR 10332, Dec. 22, 1959; 34 FR 18857, Nov. 26, 1969; paras. (d) and (g), 47 FR 41278, Sept. 17, 1982, effective Oct. 1, 1982; para. (a), 49 FR 48416, Dec. 12, 1984, effective Feb. 11, 1985; para. (f) revised, 65 FR 54604, Sept. 8, 2000, effective Nov. 7, 2000; paras. (a) and (c) revised, 65 FR 76756, Dec. 7, 2000, effective Feb. 5, 2001; paras. (a), (a)(2)-(3), (c)-(e) & (g) revised, 68 FR 14332, Mar. 25, 2003, effective May 1, 2003; para. (a)(3) revised, 69 FR 49959, Aug. 12, 2004, effective Sept. 13, 2004] (Emphasis supplied.)

[3] 35 U.S.C. §133 provides:
35 U.S.C. §133 Time for prosecuting application.
Upon failure of the applicant to prosecute the application within six months after any action therein, of which notice has been given or mailed to the applicant, or within such shorter time, not less than thirty days, as fixed by the Commissioner in such action, the application shall be regarded as abandoned by the parties thereto, unless it be shown to the satisfaction of the Commissioner that such delay was unavoidable.

the first petition seeking revival, must have been unavoidable for the reply now to be accepted on petition.[4]

Delays in responding properly raise the question whether delays are unavoidable.[5] Where there is a question whether the delay was unavoidable, Petitioners must meet the burden of establishing that the delay was unavoidable within the meaning of 35 U.S.C. §133 and 37 C.F.R. §1.137(a).[6] And the Petitioner must be diligent in attending to the matter.[7] Failure to do so does not constitute the care required under Pratt, and so cannot satisfy the test for diligence and due care.

(By contrast, unintentional delays are those that do not satisfy the very strict statutory and regulatory requirements of unavoidable delay, and also, by definition, are not intentional.[8]))

Allegations as to the Request to
Withdraw the Holding of Abandonment

The courts have determined the construct for properly supporting a petition seeking withdrawal of a holding of abandonment.[9]

The commentary at MPEP §711.03(c) provides:

* * *

> **B. Petition To Withdraw Holding of Abandonment Based on Evidence That a Reply Was Timely Mailed or Filed**
>
> 37 C.F.R. §1.10(c) through §1.10(e) and §1.10(g) set forth procedures for petitioning the Director of the USPTO to accord a filing date to correspondence as of the date of deposit of the

---

[4] Therefore, by example, an unavoidable delay in the payment of the Filing Fee might occur if a reply is shipped by the US Postal Service, but due to catastrophic accident, the delivery is not made.

[5] See: *Changes to Patent Practice and Procedure*; *Final Rule Notice*, 62 *Fed. Reg.* at 53158-59 (October 10, 1997), 1203 *Off. Gaz. Pat. Office* at 86-87 (October 21, 1997).

[6] See: In re Application of G, 11 USPQ2d 1378, 1380 (Comm'r Pats. 1989).

[7] See: Diligence in Filing Petitions to Revive and Petitions to Withdraw the Holding of Abandonment, 1124 Off. Gaz. Pat. Office 33 (March 19, 1991). It was and is Petitioner's burden to exercise diligence in seeking either to have the holding of abandonment withdrawn or the application revived. See 1124 Off. Gaz. Pat. Office supra.

[8] Therefore, by example, an unintentional delay in the reply might occur if the reply and transmittal form are to be prepared for shipment by the US Postal Service, but other pressing matters distract one's attention and the mail is not timely deposited for shipment.

[9] See: Delgar v. Schulyer, 172 USPQ 513 (D.D.C. 1971).

correspondence as "Express Mail." A petition to withdraw the holding of abandonment relying upon a timely reply placed in "Express Mail" must include an appropriate petition under 37 C.F.R. §1.10(c), (d), * (e), or (g) (see MPEP § 513). When a paper is shown to have been mailed to the Office using the "Express Mail" procedures, the paper must be entered in PALM with the "Express Mail" date.

Similarly, applicants may establish that a reply was filed with a postcard receipt that properly identifies the reply and provides *prima facie* evidence that the reply was timely filed. See MPEP § 503. For example, if the application has been held abandoned for failure to file a reply to a first Office action, and applicant has a postcard receipt showing that an amendment was timely filed in response to the Office action, then the holding of abandonment should be withdrawn upon the filing of a petition to withdraw the holding of abandonment. When the reply is shown to have been timely filed based on a postcard receipt, the reply must be entered into PALM using the date of receipt of the reply as shown on the post card receipt.

Where a certificate of mailing under 37 C.F.R. §1.8, but not a postcard receipt, is relied upon in a petition to withdraw the holding of abandonment, see 37 C.F.R. §1.8(b) and MPEP § 512. As stated in 37 C.F.R §1.8(b)(3) the statement that attests to the previous timely mailing or transmission of the correspondence must be on a personal knowledge basis, or to the satisfaction of the Director of the USPTO. If the statement attesting to the previous timely mailing is not made by the person who signed the Certificate of Mailing (i.e., there is no personal knowledge basis), then the statement attesting to the previous timely mailing should include evidence that supports the conclusion that the correspondence was actually mailed (e.g., copies of a mailing log establishing that correspondence was mailed for that application). When the correspondence is shown to have been timely filed based on a certificate of mailing, the correspondence is entered into PALM with the actual date of receipt (i.e., the date that the duplicate copy of the papers was filed with the statement under 37 C.F.R. §1.8).

37 C.F.R. §1.8(b) also permits applicant to notify the Office of a previous mailing or transmission of correspondence and submit a

> statement under 37 C.F.R. 1.8(b)(3) accompanied by a duplicate copy of the correspondence when a reasonable amount of time (e.g., more than one month) has elapsed from the time of mailing or transmitting of the correspondence. Applicant does not have to wait until the application becomes abandoned before notifying the Office of the previous mailing or transmission of the correspondence. Applicant should check the private Patent Application Information Retrieval (PAIR) system for the status of the correspondence before notifying the Office. See MPEP § 512.
>
> * * *

Moreover, the regulation requires that relief be sought within two (2) months of the act complained of.

Thus, Petitioner appears not to have satisfied the showing requirements described above.

CONCLUSION

Because it appears that Petitioner has not satisfied the burdens set forth in Delgar v. Schulyer, the petition as considered under 37 C.F.R. §1.181 hereby is **dismissed**.

ALTERNATIVE VENUE

Petitioner's only alternative to irretrievable abandonment may be a petition alleging unavoiable or unintentional delay under 37 C.F.R. §1.137(a) or (b).[10]

Petitioner may wish to file such a petition to the Commissioner requesting revival of an application abandoned due to unintentional delay. (See: http://www.uspto.gov/web/offices/pac/mpep/documents/0700_711_03_c.htm#sect711.03c)

A petition to revive on the grounds of unintentional delay must be filed promptly and such petition must be accompanied by the reply (the amendment), the petition fee, and a statement that "the entire delay in filing the required reply from the due date for the reply until the filing of a grantable petition was unintentional." (The statement is in the form available online.)

---

[10] The regulations at 37 C.F.R. §1.183 sets forth that waiver of the rules is "subject to such other requirements as may be imposed."

Further correspondence with respect to this matter should be addressed as follows:[11]

By mail: Commissioner for Patents[12]
P.O. Box 1450
Alexandria, VA 22313-1450

By FAX: IFW Formal Filings
(571) 273-8300
ATTN.: Office of Petitions

By hand: Mail Stop: Petition
Customer Service Window
Randolph Building
401 Dulany Street
Alexandria, VA 22314

Telephone inquiries concerning this decision may be directed to the undersigned at (571) 272-3214.

John J. Gillon, Jr.
Senior Attorney
Office of Petitions

[11] On July 15, 2005, the Central Facsimile (FAX) Number changed to (571) 273-8300. The old FAX number no longer is in service and (571) 273-8300 will be the only facsimile number recognized for centralized delivery. (For further information. see: http://www.uspto.gov/web/offices/pac/dapp/opla/preognotice/cfax062005.pdf.)

[12] To determine the appropriate addresses for other subject-specific correspondence, refer to the USPTO Web site at www.uspto.gov.

UNITED STATES PATENT AND TRADEMARK OFFICE

Commissioner for Patents
United States Patent and Trademark Office
P.O. Box 1450
Alexandria, VA 22313-1450
www.uspto.gov

JJGJR.: 08-07

Paper No:__

COPY MAILED

AUG 27 2007

OFFICE OF PETITIONS

MORGAN LEWIS & BOCKIUS LLP
1111 PENNSYLVANIA AVENUE NW
WASHINGTON DC 20004

In re Application of	:	
Muller, et al.	:	DECISION
Application No. 09/764,366	:	
Filing Date: 18 January, 2001	:	
Attorney Docket No.: 060967-0014	:	

This is a decision on the petition filed on 14 August, 2006, as a request for withdrawal of the holding of abandonment under 37 C.F.R. §1.181, alternatively, to revive the instant application under 37 C.F.R. §1.137(a) as having been abandoned due to unavoidable delay.

The Office regrets the delay in addressing this matter, however, the instant petition was presented to the attorneys in the Office of Petitions only at this writing.[1]

For the reasons set forth below, the petition as considered under 37 C.F.R. §1.181 is **DISMISSED**, however, the petition under 37 C.F.R. §1.137(a) is **GRANTED**.

BACKGROUND

The record reflects that:

- Petitioner failed to reply timely and properly to the non-final Office action mailed 25

[1] **NOTE: Monitoring of the status of applications on PAIR can inform one's management of application responses and provide an indication when mailings of Office actions should be expected. Status Inquiries filed at three (3) or four (4) month intervals provide a demonstration of diligence and attention in supporting a petition seeking relief under 37 C.F.R. §1.181.**

March, 2005, with reply due absent an extension of time on or before Monday, 27 June, 2005;

- the application went abandoned by operation of law after midnight 25 June, 2005;
- the Office mailed the Notice of Abandonment on 7 October, 2005;
- on 17 March, 2006, Petitioner filed the original petition and alleged the timely filing of a reply in the form of an amendment filed over a 26 September, 2005, certificate of mailing (with request and fee for extension of time), and provided a copy thereof, with a portion of a date stamped receipt card (see: MPEP §503[2])–Petitioner's problem, however, was that Petitioner ignored the requirement for pleading the original petition within two (2) months of the act complained of[3]–failing satisfaction of the Rule, Petitioner's alternatives

---

[2] MPEP §503 provides in pertinent part:

§503 Application Number and Filing Receipt

* * *

A return postcard should be attached to *each* patent application for which a receipt is desired. It is important that the return postcard itemize all of the components of the application. If the postcard does not itemize each of the components of the application, it will not serve as evidence that any component which was not itemized was received by the United States Patent and Trademark Office (USPTO). It should be recognized that the identification of an application by application number does not necessarily signify that the USPTO has accepted the application as complete (37 C.F.R. §1.53(a)).

* * *

RETURN POSTCARD

If a receipt of any item (e.g., paper or fee) filed in the USPTO is desired, it may be obtained by enclosing with the paper a self-addressed postcard specifically identifying the item. The USPTO will stamp the receipt date on the postcard and place it in the outgoing mail. A postcard receipt which itemizes and properly identifies the items which are being filed serves as *prima facie* evidence of receipt in the USPTO of all the items listed thereon on the date stamped thereon by the USPTO.

The identifying data on the postcard should be so complete as to clearly identify the item for which receipt is requested. For example, the postcard should identify the applicant's name, application number (if known), confirmation number (if known), filing date, interference number, title of the invention, etc. The postcard should also identify the type of paper being filed, e.g., new application, affidavit, amendment, notice of appeal, appeal brief, drawings, fees, motions, supplemental oath or declaration, petition, etc., and the number of pages being submitted. If a new application is being filed, all parts of the application being submitted should be separately listed on the postcard, e.g., the number of pages of specification (including written description, claims and abstract), number of claims, number of sheets of drawings, number of pages of oath/declaration, number of pages of cover sheet (provisional application).

The postcard receipt will not serve as *prima facie* evidence of receipt of any item which is not adequately itemized on the postcard. For example, merely listing on the postcard "a complete application" or "patent application" will not serve as a proper receipt for each of the required components of an application (e.g., specification (including claims), drawings (if necessary), oath or declaration and the application filing fee) or missing portions (e.g., pages, sheets of drawings) of an application if one of the components or portion of a component is found to be missing by the USPTO. Each separate component should be specifically and properly itemized on the postcard. Furthermore, merely incorporating by reference in the postcard receipt, the items listed in a transmittal letter will not serve as *prima facie* evidence of receipt of those items.

The person receiving the item(s) in the USPTO will check the listing on the postcard against the item(s) being filed to be sure they are properly identified and that all the items listed on the postcard are presently being submitted to the USPTO. If any of the items listed on the postcard are not being submitted to the USPTO, those items will be crossed off and the post-card initialed by the person receiving the items. Upon return of a postcard receipt from the USPTO, the postcard receipt should be promptly reviewed by the person who filed the items to ensure that every item specifically denoted on the postcard was received by the USPTO. If the postcard receipt has been annotated to indicate that a particular item denoted on the postcard was not received by the USPTO, the postcard receipt will not serve as *prima facie* evidence of receipt of that item in the USPTO. (Emphasis supplied.)

[3] The regulations at 37 C.F.R. §1.181 provide:

§ 1.181 Petition to the Director.

(a) Petition may be taken to the Director:

were petitions under 37 C.F.R. §1.137(a) or (b), and for those reasons the petition was dismissed on 12 June, 2006;

- the instant petitions seek to overcome these deficiencies, and while the delay between the act complained of and the seeking of relief bars relief under the provisions of 37 C.F.R. §1.181, as indicated above, relief is available under 37 C.F.R. §1.137, and Petitioner has alleged unavoidable delay under 37 C.F.R. §1.137(a), filed a petition and fee therefor, made a showing in satisfaction thereof, and has submitted a reply in the form of an amendment.

Out of an abundance of caution, Petitioners always are reminded that the filing of a petition under 37 C.F.R. §1.181 does not toll any periods that may be running any action by the Office and a petition seeking relief under the regulation must be filed within two (2) months of the act complained of (see: 37 C.F.R. §1.181(f)); and those registered to practice *and* all others who make representations before the Office must inquire into the underlying facts of representations made to the Office and support averments with the appropriate documentation–since all owe to the Office the continuing duty to disclose.[4]

---

(1) From any action or requirement of any examiner in the *ex parte* prosecution of an application, or in *ex parte* or *inter partes* prosecution of a reexamination proceeding which is not subject to appeal to the Board of Patent Appeals and Interferences or to the court;
(2) In cases in which a statute or the rules specify that the matter is to be determined directly by or reviewed by the Director; and
(3) To invoke the supervisory authority of the Director in appropriate circumstances. For petitions involving action of the Board of Patent Appeals and Interferences, see § 41.3 of this title.
(b) Any such petition must contain a statement of the facts involved and the point or points to be reviewed and the action requested. Briefs or memoranda, if any, in support thereof should accompany or be embodied in the petition; and where facts are to be proven, the proof in the form of affidavits or declarations (and exhibits, if any) must accompany the petition.
(c) When a petition is taken from an action or requirement of an examiner in the *ex parte* prosecution of an application, or in the *ex parte* or *inter partes* prosecution of a reexamination proceeding, it may be required that there have been a proper request for reconsideration (§ 1.111) and a repeated action by the examiner. The examiner may be directed by the Director to furnish a written statement, within a specified time, setting forth the reasons for his or her decision upon the matters averred in the petition, supplying a copy to the petitioner.
(d) Where a fee is required for a petition to the Director the appropriate section of this part will so indicate. If any required fee does not accompany the petition, the petition will be dismissed.
(e) Oral hearing will not be granted except when considered necessary by the Director.
(f) The mere filing of a petition will not stay any period for reply that may be running against the application, nor act as a stay of other proceedings. Any petition under this part not filed within two months of the mailing date of the action or notice from which relief is requested may be dismissed as untimely, except as otherwise provided. This two-month period is not extendable.
(g) The Director may delegate to appropriate Patent and Trademark Office officials the determination of petitions.
[24 FR 10332, Dec. 22, 1959; 34 FR 18857, Nov. 26, 1969; paras. (d) and (g), 47 FR 41278, Sept. 17, 1982, effective Oct. 1, 1982; para. (a), 49 FR 48416, Dec. 12, 1984, effective Feb. 11, 1985; para. (f) revised, 65 FR 54604, Sept. 8, 2000, effective Nov. 7, 2000; paras. (a) and (c) revised, 65 FR 76756, Dec. 7, 2000, effective Feb. 5, 2001; paras. (a), (a)(2)-(3), (c)-(e) & (g) revised, 68 FR 14332, Mar. 25, 2003, effective May 1, 2003; para. (a)(3) revised, 69 FR 49959, Aug. 12, 2004, effective Sept. 13, 2004] (Emphasis supplied.)

[4] See supplement of 17 June, 1999. The Patent and Trademark Office is relying on petitioner's duty of candor and good faith and accepting a statement made by Petitioner. See Changes to Patent Practice and Procedure, 62 Fed. Reg. at 53160 and 53178, 1203 Off. Gaz. Pat. Office at 88 and 103 (responses to comments 64 and 109)(applicant obligated under 37 C.F.R. §10.18 to inquire into the underlying facts and circumstances when providing statements to the Patent and Trademark Office).

Specifically, the regulations at 37 C.F.R. §10.18 provide:

§ 10.18 Signature and certificate for correspondence filed in the Patent and Trademark Office.
(a) For all documents filed in the Office in patent, trademark, and other non-patent matters, except for correspondence that is required to be

STATUTES, REGULATIONS AND ANALYSIS

Congress has authorized the Commissioner to "revive an application if the delay is shown to the satisfaction of the Commissioner to have been "unavoidable." 35 U.S.C. §133 (1994).[5]

The regulations at 37 C.F.R. §1.137(a) and (b) set forth the requirements for a petitioner to revive a previously unavoidably or unintentionally, respectively, abandoned application under this congressional grant of authority.

The language of 35 U.S.C. §133 and 37 C.F.R. §1.137(a) is clear, unambiguous, and without qualification: the delay in tendering the reply to the outstanding Office action, as well as filing the first petition seeking revival, must have been unavoidable for the reply now to be accepted on

---

signed by the applicant or party, each piece of correspondence filed by a practitioner in the Patent and Trademark Office must bear a signature by such practitioner complying with the provisions of §1.4(d), §1.4(e), or § 2.193(c)(1) of this chapter.
(b) By presenting to the Office (whether by signing, filing, submitting, or later advocating) any paper, the party presenting such paper, whether a practitioner or non-practitioner, is certifying that—

(1) All statements made therein of the party's own knowledge are true, all statements made therein on information and belief are believed to be true, and all statements made therein are made with the knowledge that whoever, in any matter within the jurisdiction of the Patent and Trademark Office, knowingly and willfully falsifies, conceals, or covers up by any trick, scheme, or device a material fact, or makes any false, fictitious or fraudulent statements or representations, or makes or uses any false writing or document knowing the same to contain any false, fictitious or fraudulent statement or entry, shall be subject to the penalties set forth under 18 U.S.C. 1001, and that violations of this paragraph may jeopardize the validity of the application or document, or the validity or enforceability of any patent, trademark registration, or certificate resulting therefrom; and

(2) To the best of the party's knowledge, information and belief, formed after an inquiry reasonable under the circumstances, that —

(i) The paper is not being presented for any improper purpose, such as to harass someone or to cause unnecessary delay or needless increase in the cost of prosecution before the Office;

(ii) The claims and other legal contentions therein are warranted by existing law or by a nonfrivolous argument for the extension, modification, or reversal of existing law or the establishment of new law;

(iii) The allegations and other factual contentions have evidentiary support or, if specifically so identified, are likely to have evidentiary support after a reasonable opportunity for further investigation or discovery; and

(iv) The denials of factual contentions are warranted on the evidence, or if specifically so identified, are reasonably based on a lack of information or belief.

(c) Violations of paragraph (b)(1) of this section by a practitioner or non-practitioner may jeopardize the validity of the application or document, or the validity or enforceability of any patent, trademark registration, or certificate resulting therefrom. Violations of any of paragraphs (b)(2)(i) through (iv) of this section are, after notice and reasonable opportunity to respond, subject to such sanctions as deemed appropriate by the Commissioner, or the Commissioner's designee, which may include, but are not limited to, any combination of —

(1) Holding certain facts to have been established;
(2) Returning papers;
(3) Precluding a party from filing a paper, or presenting or contesting an issue;
(4) Imposing a monetary sanction;
(5) Requiring a terminal disclaimer for the period of the delay; or
(6) Terminating the proceedings in the Patent and Trademark Office.

(d) Any practitioner violating the provisions of this section may also be subject to disciplinary action. See § 10.23(c)(15).
[Added 50 FR 5175, Feb. 6, 1985, effective Mar. 8, 1985; para. (a) revised, 58 FR 54494, Oct. 22, 1993, effective Nov. 22, 1993; paras. (a) & (b) revised, paras. (c) & (d) added, 62 FR 53131, Oct. 10, 1997, effective Dec. 1, 1997; para. (a) revised, 69 FR 56481, Sept. 21, 2004, effective Oct. 21, 2004]

[5] 35 U.S.C. §133 provides:
35 U.S.C. §133 Time for prosecuting application.
Upon failure of the applicant to prosecute the application within six months after any action therein, of which notice has been given or mailed to the applicant, or within such shorter time, not less than thirty days, as fixed by the Commissioner in such action, the application shall be regarded as abandoned by the parties thereto, unless it be shown to the satisfaction of the Commissioner that such delay was unavoidable.

petition.[6]

Delays in responding properly raise the question whether delays are unavoidable.[7] Where there is a question whether the delay was unavoidable, Petitioners must meet the burden of establishing that the delay was unavoidable within the meaning of 35 U.S.C. §133 and 37 C.F.R. §1.137(a).[8] And the Petitioner must be diligent in attending to the matter.[9] Failure to do so does not constitute the care required under Pratt, and so cannot satisfy the test for diligence and due care.

(By contrast, unintentional delays are those that do not satisfy the very strict statutory and regulatory requirements of unavoidable delay, and also, by definition, are not intentional.[10]))

Allegations as to the Request to Withdraw the Holding of Abandonment

The courts have determined the construct for properly supporting a petition seeking withdrawal of a holding of abandonment.[11] (See also: the Commentary at MPEP §711.03(c).[12])

---

[6] Therefore, by example, an unavoidable delay in the payment of the Filing Fee might occur if a reply is shipped by the US Postal Service, but due to catastrophic accident, the delivery is not made.

[7] See: *Changes to Patent Practice and Procedure*; *Final Rule Notice*, 62 *Fed. Reg.* at 53158-59 (October 10, 1997), 1203 *Off. Gaz. Pat. Office* at 86-87 (October 21, 1997).

[8] See: In re Application of G, 11 USPQ2d 1378, 1380 (Comm'r Pats. 1989).

[9] See: Diligence in Filing Petitions to Revive and Petitions to Withdraw the Holding of Abandonment, 1124 Off. Gaz. Pat. Office 33 (March 19, 1991). It was and is Petitioner's burden to exercise diligence in seeking either to have the holding of abandonment withdrawn or the application revived. See 1124 Off. Gaz. Pat. Office supra.

[10] Therefore, by example, an unintentional delay in the reply might occur if the reply and transmittal form are to be prepared for shipment by the US Postal Service, but other pressing matters distract one's attention and the mail is not timely deposited for shipment.

[11] See: Delgar v. Schulyer, 172 USPQ 513 (D.D.C. 1971).

[12] The Commentary at MPEP §711.03(c) provides:

* * *

B. Petition To Withdraw Holding of Abandonment Based on Evidence That a Reply Was Timely Mailed or Filed

37 C.F.R. §1.10(c) through §1.10(e) and §1.10(g) set forth procedures for petitioning the Director of the USPTO to accord a filing date to correspondence as of the date of deposit of the correspondence as "Express Mail." A petition to withdraw the holding of abandonment relying upon a timely reply placed in "Express Mail" must include an appropriate petition under 37 C.F.R. §1.10(c), (d), * (e), or (g) (see MPEP § 513). When a paper is shown to have been mailed to the Office using the "Express Mail" procedures, the paper must be entered in PALM with the "Express Mail" date.

Similarly, applicants may establish that a reply was filed with a postcard receipt that properly identifies the reply and provides *prima facie* evidence that the reply was timely filed. See MPEP § 503. For example, if the application has been held abandoned for failure to file a reply to a first Office action, and applicant has a postcard receipt showing that an amendment was timely filed in response to the Office action, then the holding of abandonment should be withdrawn upon the filing of a petition to withdraw the holding of abandonment. When the reply is shown to have been timely filed based

Moreover, the regulation requires that relief be sought within two (2) months of the act complained of.

Again, Petitioner appears not to have satisfied the delay/timing requirements described above.

As to Allegations
of Unavoidable Delay

The requirements for a grantable petition under 37 C.F.R. §1.137(a) are the petition and fee, a showing of unavoidable delay, a proper reply, and–where appropriate--a terminal disclaimer and fee.

It appears that Petitioner has satisfied the requirements of the regulation.

CONCLUSION

Because it appears that Petitioner has not satisfied the burdens set forth in Delgar v. Schulyer, the petition as considered under 37 C.F.R. §1.181 hereby is **dismissed**, however, the instant petition under 37 C.F.R. §1.137(a) is **granted**.

The instant application is released to Technology Center 3600 for further processing in due course.

.

While telephone inquiries regarding this decision may be directed to the undersigned at (571)

---

on a postcard receipt, the reply must be entered into PALM using the date of receipt of the reply as shown on the post card receipt.

Where a certificate of mailing under 37 C.F.R. §1.8, but not a postcard receipt, is relied upon in a petition to withdraw the holding of abandonment, see 37 C.F.R. §1.8(b) and MPEP § 512. As stated in 37 C.F.R §1.8(b)(3) the statement that attests to the previous timely mailing or transmission of the correspondence must be on a personal knowledge basis, or to the satisfaction of the Director of the USPTO. If the statement attesting to the previous timely mailing is not made by the person who signed the Certificate of Mailing (i.e., there is no personal knowledge basis), then the statement attesting to the previous timely mailing should include evidence that supports the conclusion that the correspondence was actually mailed (e.g., copies of a mailing log establishing that correspondence was mailed for that application). When the correspondence is shown to have been timely filed based on a certificate of mailing, the correspondence is entered into PALM with the actual date of receipt (i.e., the date that the duplicate copy of the papers was filed with the statement under 37 C.F.R. §1.8).

37 C.F.R. §1.8(b) also permits applicant to notify the Office of a previous mailing or transmission of correspondence and submit a statement under 37 C.F.R. 1.8(b)(3) accompanied by a duplicate copy of the correspondence when a reasonable amount of time (e.g., more than one month) has elapsed from the time of mailing or transmitting of the correspondence. Applicant does not have to wait until the application becomes abandoned before notifying the Office of the previous mailing or transmission of the correspondence. Applicant should check the private Patent Application Information Retrieval (PAIR) system for the status of the correspondence before notifying the Office. See MPEP § 512.

* * *

272-3214, it is noted that all practice before the Office is in writing (see: 37 C.F.R. §1.2[13]) and the proper authority for action on any matter in this regard are the statutes (35 U.S.C.), regulations (37 C.F.R.) and the commentary on policy (MPEP). Therefore, no telephone discussion may be controlling or considered authority for Petitioner's action(s).

John J. Gillon, Jr.
Senior Attorney
Office of Petitions

[13] The regulations at 37 C.F.R. §1.2 provide:
§1.2 Business to be transacted in writing.
All business with the Patent and Trademark Office should be transacted in writing.The personal attendance of applicants or their attorneys or agents at the Patent and Trademark Office is unnecessary. The action of the Patent and Trademark Office will be based exclusively on the written record in the Office. No attention will be paid to any alleged oral promise, stipulation,or understanding in relation to which there is disagreement or doubt.

UNITED STATES PATENT AND TRADEMARK OFFICE

Commissioner for Patents
United States Patent and Trademark Office
Washington, D.C. 20231
www.uspto.gov

Paper No. 12

Swabey Ogilvy Renault
1981 McGill College, Suite 1600
Montreal Quebec, Canada
H3A 2Y3

COPY MAILED

SEP 2 7 2002

OFFICE OF PETITIONS

In re Application of Chong G. Wang et al. Application No. 09/764,417 Filed: January 19, 2001 Attorney Docket No. 15716-1US-CC:1cl	DECISION DISMISSING PETITION UNDER 37 CFR 1.78(A)(6)

This is a decision on the petition under 37 CFR 1.78(A)(6), filed June 5, 2002, to accept an unintentionally delayed claim under 35 U.S.C.§ 119(e) for the benefit of prior filed provisional Application No. 60/180,795, filed February 7, 2000.

The petition is DISMISSED AS MOOT.

A petition under 37 CFR 1.78(a)(6) is only applicable to those applications filed on or after November 29, 2000.

Along with the instant petition under 37 CFR 1.78(a)(6), petitioner has submitted an amendment to the first sentence of the specification following the title to include a reference to prior-filed provisional Application No. 60/180,795, filed February 7, 2000.

The instant pending nonprovisional application was filed on January 19, 2001, within twelve months of the filing date of prior filed provisional application Application No. 60/180,795, which was filed on February 7, 2000, and for which priority is claimed. While a reference to the prior-filed provisional application was not included in an ADS or in the first sentence of the specification following the title, reference nevertheless was made in the transmittal letter accompanying the instant application on January 19, 2001.

The current procedure where a claim for priority under 37 CFR 1.78(a)(5) is not included in the first sentence of the specification or in an ADS but does appear either in the oath or declaration or a transmittal letter filed with the application and the Office notes the claim for priority, no petition will be required to accept a late claim for priority. This is because the application would

have been scheduled for publication on the basis of the information concerning the claim submitted elsewhere in the application within the time period set forth in 37 CFR 1.78(a)(5). However, on the other hand, if the USPTO does not note the claim for priority to the provisional application in the oath or declaration or transmittal letter submitted with the application, a petition will be required to accept a late claim for priority under 37 CFR 1.78(a)(6). In the instant case, the Office noted the claim for priority of provisional Application No. 60/180,795 in the patent application transmittal letter, as shown by its inclusion on the filing receipt.

In view of the above, the $1280 petition fee will be credited to petitioner's deposit account.

Any questions concerning this decision on petition may be directed to the undersigned at (703) 308-6911. All other inquiries concerning either the examination procedures or status of the application should be directed to the Technology Center.

This application is being forwarded to Technology Center AU 1614 for processing the amendment filed June 5, 2002 and for consideration by the examiner of the claim under 35 U.S.C. § 119(e) and 37 CFR 1.78(a)(5) for the benefit of prior filed provisional Application No. 60/180,795, filed February 7, 2000.

Telephone inquiries regarding this decision may be directed to the undersigned at (703) 308-6911.

Latrice Bond

Latrice Bond
Paralegal Specialist
Office of Petitions
Office of the Deputy Commissioner
for Patent Examination Policy

Frances Hicks

Frances Hicks
Lead Petitions Examiner
Office of Petitions
Office of the Deputy Commissioner
for Patent Examination Policy

UNITED STATES PATENT & TRADEMARK OFFICE
Washington, D.C. 20231

REQUEST FOR PATENT FEE REFUND

1 Date of Request: 9/20/02 | 2 Serial/Patent # 09/764,417

3 Please refund the following fee(s):		4 PAPER NUMBER	5 DATE FILED	6 AMOUNT
	Filing			$
	Amendment			$
	Extension of Time			$
	Notice of Appeal/Appeal			$
X	Petition	#11	06.05.02	$ 1280.
	Issue			$
	Cert of Correction/Terminal Disc.			$
	Maintenance			$
	Assignment			$
	Other			$

7 TOTAL AMOUNT OF REFUND $ 1280.

8 TO BE REFUNDED BY:

	Treasury Check
X	Credit Deposit A/C #:

9 19--5113

10 REASON:

	Overpayment
	Duplicate Payment
	No Fee Due (Explanation):

Petition Dismissed as moot

11 REFUND REQUESTED BY:

TYPED/PRINTED NAME: Latrice Ford TITLE: PA

SIGNATURE: Latrice Ford PHONE: 308-6911

OFFICE: Office of Petitions

****

THIS SPACE RESERVED FOR FINANCE USE ONLY:

APPROVED: Alicia Tullo DATE: 9/27/02

Instructions for completion of this form appear on the back. After completion, attach white and yellow copies to the official file and mail or hand-carry to:

Office f Finance
Refund Branch
Crystal Park One, Room 802B

FORM PTO 1577
(01/90)

BEST AVAILABLE COPY

UNITED STATES
PATENT AND
TRADEMARK OFFICE

UNDER SECRETARY OF COMMERCE FOR INTELLECTUAL PROPERTY
AND DIRECTOR OF THE UNITED STATES PATENT AND TRADEMARK OFFICE
WASHINGTON, D.C. 20231
WWW.USPTO.GOV

SEP - 3 2003

Anna M. Nelson
MERCHANT & GOULD P.C.
P.O.Box 2903
Minneapolis, Minnesota 55402-0903

In re Application of	:	
Wang et al	:	
Serial No.: 09/764,417	:	WITHDRAWAL OF ABANDONMENT
Filed: January 19, 2001	:	
Attorney Docket No.: 14330.1US01	:	

This is in response to applicants' petition under 37 CFR § 1.181, filed August 25, 2003, requesting revival of the above-identified application based on timely filing of a response to the Final Office Action.

A review of the file history indicates the examiner mailed a Final Office Action on October 15, 2002, setting a three month statutory period from the mailing date of the action. Upon failure to receive a reply the application was held abandoned by Notice of Abandonment mailed August 13, 2003. Applicants state they filed a Request for Three Month Extension of Time and a Request for Continued Examination (RCE) on April 14, 2003. Applicants also provide a postcard stamped by the Office on April 14, 2003 indicating receipt of the Request for Three Month Extension of Time and the RCE. Upon further examination of the file it is found that the CPA was never matched with the file. Based on the statements and evidence provided it is concluded that applicants timely filed a reply to the Final Office Action. In view thereof, the Notice of Abandonment is withdrawn and the application is restored to a pending status with the mailing of this decision.

Applicants' petition is **GRANTED**.

As applicants have included a copy of the Request for RCE the application will be forwarded for completion of processing of the RCE request.

Should there be any questions regarding this decision, please contact Cecilia Tsang by telephone at (703) 308-0254 or by facsimile transmission at (703) 305-7230.

Cecilia Tsang for
Bruce Kisliuk
Director, Technology Center 1600

0976 4419

SPE RESPONSE FOR CERTIFICATE OF CORRECTION

Paper No.: _____

DATE : 6/21/2005

TO SPE OF : ART UNIT 1600(1637)

SUBJECT : Request for Certificate of Correction on Patent No.: 6,737,238 B2

A response is requested with respect to the accompanying request for a certificate of correction.

Please complete this form and return with file, within **7** days to:
Certificates of Correction Branch - PK 3-922
Palm location **7580** - Tel. No. 305-8309

With respect to the change(s) requested, correcting Office and/or Applicant's errors, should the patent read as shown in the certificate of correction? No new matter should be introduced, nor should the scope or meaning of the claims be changed.

*** okay to enter changes in cofc request ?**

Ernest C. White, LIE305-8339
Certificates of Correction Branch

Thank You For Your Assistance

The request for issuing the above-identified correction(s) is hereby:
Note your decision on the appropriate box.

- ☑ **Approved** — **All** changes apply.
- ☐ **Approved in Part** — Specify below which changes **do not** apply.
- ☐ **Denied** — State the reasons for denial below.

Comments:
A review of prosecution history clearly shows Applicants did NOT claim priority to JP 11-110049. Other changes are minor grammatical changes that do not affect scope or meaning of the claims.

KENNETH R. HORLICK, PRIMARY EXAMINER

Ken Horlick for Gary Benzion — SPE

1637 — Art Unit

PTOL-306 (REV. 7/03) — U.S. DEPARTMENT OF COMMERCE Patent and Trademark Office

KENNETH R. HORLICK, PH.D
PRIMARY EXAMINER
Kenneth R. Horlick 9/6/07

UNITED STATES PATENT AND TRADEMARK OFFICE

Commissioner for Patents
United States Patent and Trademark Office
Washington, D.C. 20231
www.uspto.gov

GKN
03100.015258
ndy

Paper No. 17

FITZPATRICK CELLA HARPER & SCINTO
30 ROCKEFELLER PLAZA
NEW YORK NY 10112

COPY MAILED

APR 03 2003

OFFICE OF PETITIONS

DECISION ON PETITION

In re Application of
Tadashi Okamoto, Nobuko Yamamoto, and Tomohiro Suzuki
Application No. 09/764,420
Date Deposited: January 19, 2001
Attorney Docket No. 35.C15258
Title: PROBE BOUND SUBSTRATE, PROCESS FOR MANUFACTURING SAME, PROBE ARRAY, METHOD OF DETECTING TARGET SUBSTANCE, METHOD OF SPECIFYING NUCLEOTIDE SEQUENCE OF SINGLE-STRANDED NUCLEIC ACID IN SAMPLE, AND QUANTITATIVE DETERMINATION OF TARGET SUBSTANCE IN SAMPLE

RECEIVED
APR 11 2003
FITZPATRICK, CELLA, HARPER & SCINTO

This is a decision on the petition under 37 CFR 1.53(b), filed on January 28, 2003, requesting that the above-identified application be accorded a filing date of January 19, 2001.

The application was filed on January 19, 2001, in a language other than English, without an accompanying translation. On March 30, 2001, Initial Patent Examination Division (OIPE) mailed a Filing Receipt which indicated that the application had been accorded a filing date of January 19, 2001, as well as a Notice to File Missing Parts (Notice) indicating that petitioner was required to file an executed oath or declaration, the late filing fee associated with the late filing of an oath of declaration, an English translation of the application along with a statement that the translation is accurate. This Notice set a two month period for reply, with extensions of time obtainable under §1.136(a).

On May 25, 2001, an English translation was received.

On July 30, 2001, the Office mailed an updated filing receipt, indicating that the application had been accorded a filing date of May 25, 2001.

Petitioners allege that the application is entitled to a filing date of January 19, 2001.

The Office will accord a filing date to an application meeting the requirements of 35 USC 111(a), even though some or all of the application papers, including the written description and the claims, are in a language other than English and hence does not comply with 37 CFR 1.52. A review of the application file reveals that the application as filed,[1] though in Japanese, was entitled to and was accorded a filing date of January 19, 2001.

Applicants timely and properly replied to the "Notice to File Missing Parts of Application - Filing Date Granted," supplying the required English translations with a declaration attesting to the accuracy of the translations. Accordingly, there does not appear to have been a basis for, and thus, the Office erred in changing the filing date of this application to May 25, 2001.

In view thereof, the petition is **GRANTED**.

Given the basis for granting the petition, no petition fee is required and none has been charged.

The application is being forwarded to the Office of Initial Patent Examination (OIPE) for:

> further processing with a filing date of January 19, 2001, using the application papers received in the Office on that date and the English translations thereof filed May 25, 2001; and
>
> withdrawal of the updated filing receipt mailed July 30, 2001, and issuance of a corrected filing receipt, indicating a filing date of January 19, 2001.

Applicant will receive appropriate notifications regarding the fees owed, if any, and other information in due course from OIPE.

---

[1] In support thereof, petitioner submitted a copy of their receipt identifying this application by serial number, itemizing 54 pages of Specification, 2 pages of Drawings, and an Application Data Sheet as being received in the United States Patent and Trademark Office with a date-stamp of January 19, 2001, and lacking any notation of non-receipt of any item listed. A postcard receipt which itemizes and properly identifies the items which are being filed serves as *prima facie* evidence of receipt in the Office of all items listed thereon on the date stamped thereon by the Office. See MPEP 503.

Telephone inquiries related to this decision should be directed to Attorney Paul Shanoski at 703-305-0011.

Beverly M. Flanagan
Supervisory Petitions Examiner
Office of Petitions
Office of the Deputy Commissioner
for Patent Examination Policy

UNITED STATES PATENT AND TRADEMARK OFFICE

Commissioner for Patents
United States Patent and Trademark Office
P.O. Box 1450
Alexandria, VA 22313-1450
www.uspto.gov

Heller Ehrman LLP
4350 La Jolla Village Drive, 7th Floor
San Diego, CA 92122

COPY MAILED

SEP 29 2008

OFFICE OF PETITIONS

In re Application of	:	
Edward W. Merrill, et al.	:	
Application No. 09/764,445	:	DECISION ON PETITION
Filed: January 19, 2001	:	TO WITHDRAW
Attorney Docket No. 37697-0033	:	FROM RECORD
	:	

This is a decision on the Request to Withdraw as attorney or agent of record under 37 C.F.R. § 1.36(b), filed August 29, 2008.

The request is **APPROVED**.

A grantable request to withdraw as attorney/agent of record must be signed by every attorney/agent seeking to withdraw or contain a clear indication that one attorney is signing on behalf of another/others. A request to withdraw will not be approved unless at least 30 (thirty) days would remain between the date of approval and the later of the expiration date of a time to file a response or the expiration date of the maximum time period which can be extended under 37 C.F.R. § 1.136(a).

The request was signed by Leslie B. Overman on behalf of all attorneys of record. All attorneys/agents have been withdrawn. Applicant is reminded that there is no attorney of record at this time.

The request to change the correspondence of record is not acceptable as the requested correspondence address is not that of: (1) the first named signing inventor; or (2) an intervening assignee of the entire interest under 37 C.F.R 3.71. All future communications from the Office will be directed to the first named signing inventor at the first copied address below until otherwise properly notified by the applicant.

There is an outstanding Office action mailed August 6, 2008 that requires a reply from the applicant.

Telephone inquiries concerning this decision should be directed to Terri Williams at 571-272-2991.

T. Williams

Terri Williams
Petitions Examiner
Office of Petitions

cc: **Edward W. Merrill**
90 Somerset Street
Belmont, MA 02378

cc: **Proskauer Rose LLP**
1001 Pennsylvania Ave., N.W.
Suite 400 South
Washington, DC 20004

UNITED STATES PATENT AND TRADEMARK OFFICE

UNITED STATES DEPARTMENT OF COMMERCE
United States Patent and Trademark Office
Address: COMMISSIONER FOR PATENTS
P.O. Box 1450
Alexandria, Virginia 22313-1450
www.uspto.gov

APPLICATION NUMBER	FILING OR 371(C) DATE	FIRST NAMED APPLICANT	ATTY. DOCKET NO./TITLE
09/764,445	01/19/2001	Edward W. Merrill	37697-0033

CONFIRMATION NO. 8881

POWER OF ATTORNEY NOTICE

26633
HELLER EHRMAN LLP
4350 La Jolla Village Drive, 7th Floor
San Diego, CA 92122

OC000000032308563

Date Mailed: 09/26/2008

NOTICE REGARDING CHANGE OF POWER OF ATTORNEY

This is in response to the Power of Attorney filed 08/29/2008.

- The withdrawal as attorney in this application has been accepted. Future correspondence will be mailed to the new address of record. 37 CFR 1.33.

/tswilliams/

Office of Data Management, Application Assistance Unit (571) 272-4000, or (571) 272-4200, or 1-888-786-0101

#9
DW

UNITED STATES PATENT AND TRADEMARK OFFICE

UNDER SECRETARY OF COMMERCE FOR INTELLECTUAL PROPERTY AND
DIRECTOR OF THE UNITED STATES PATENT AND TRADEMARK OFFICE
WASHINGTON, DC 20231
www.uspto.gov

MAR 31 2003

MAILED

MAR 31 2003

OFFICE OF THE DIRECTOR
TC 3600

Lawson, Philpot & Perrson, P.C.
67 Water Street, Suite 110
Laconia, NH 03246

In re Application of
John W. Rocheleau
Application No. 09/764,473
Filed: January 17, 2001
For: PIPE FLANGE AND PIPING SYSTEM

DECISION ON PETITION
TO WITHDRAW THE
HOLDING OF ABANDONMENT

This is in response to applicant's correspondence filed in the United States Patent and Trademark Office on December 5, 2002 and supplemented by facsimile on March 21, 2003. This correspondence is being treated as a petition to withdraw the holding of abandonment.

The petition is **GRANTED**.

A review of the file record indicates that the application was held abandoned for failing to file a timely response to an Office communication dated April 3, 2002, and a notice to that effect was mailed to the applicant on November 6, 2002.

Applicant's petition includes a copy of a Notice of Appeal bearing a Certificate of Mailing date of August 28, 2002. A statement by Michael J. Perrson was received on March 21, 2003, which attests to the personal knowledge of mailing the response on the date indicated on the Certificate of Mailing. This is sufficient evidence of a timely response.

Since a timely response to the Office action was filed, the holding of abandonment is withdrawn and the application is restored to pending status. The application is being forwarded to the Supervisory Legal Instruments Examiner for treatment of the Notice of Appeal and entry of the Amendment after Final Rejection filed with the petition, and then to the Examiner for prompt action on the merits of the application.

Steven N. Meyers, Special Program Examiner
Patent Technology Center 3600
Telephone No.: (703) 308-3868
Facsimile No.: (703) 605-0586

SNM/tpl: 3/26/03

UNITED STATES PATENT AND TRADEMARK OFFICE

Commissioner for Patents
United States Patent and Trademark Office
P.O. Box 1450
Alexandria, VA 22313-1450
www.uspto.gov

Paper No. 22

COPY MAILED

JAN 12 2006

OFFICE OF PETITIONS

Lawson & Persson PC
67 Water Street Suite 103
Laconia NH 03246

In re Patent No. 6,742,816
Issue Date: June 1, 2004
Application No. 09/764,473
Filed: January 17, 2001
Inventor: Rocheleau

: ON PETITION

This patented file has come to the attention of this office by way of the communication that apparently was originally entrusted to the mails on or about February 17, 2004, and resubmitted July 8, 2005, which is being treated as a petition under 37 CFR 1.181(no fee) requesting that former counsel of record be reinstated as counsel of record. The USPTO sincerely regrets the delay in treating this petition.

The petition is granted.

The unfortunately favorable treatment by the USPTO on February 9, 2004, of the request for revocation and power of attorney to Barry G. Magidoff, Paul Sutton, Claude Narcisse, and Eli Weiss, (collectively, "Magidoff") filed by or on behalf of Taco, Inc. ("Taco") on December 11, 2003, is **vacated as granted in error**.

The power of attorney is restored to Michael Persson, sole. The "power" given to Magidoff by Taco has been revoked and all improperly recognized counsel have been removed from the list of counsel of record herein. The correspondence address was previously changed to that given above. The USPTO error is regretted. On a one time basis only, a courtesy copy of this decision is being sent to Taco via Magidoff. The USPTO will not undertake dual correspondence.

Petitioner requests that Mr. Persson be reinstated as attorney of record in that the named inventor has never executed an assignment of this application to Taco. Therefore, petitioner asserts, there is no assignee who could intervene and any such intervention was defective and should not have caused a revocation of the power previously granted to Persson. Unfortunately, the original petition has not been found in the file and cannot be located. It is noted that the USPTO correspondence address records show that the correspondence address was changed from that associated with Magidoff to that given above on June 23, 2004.

Inspection of the record reveals that Mr. John Rocheleau, the sole named inventor, appointed Michael Persson as his sole registered representative in the combined declaration and power of attorney filed January 17, 2001. Accordingly, Rocheleau is presumed, in the absence of an assignment, to be the owner of this application. See 37 CFR 3.73(a). There is nothing in the record of this file, or in the assignment records of the USPTO showing that Persson has subsequently conveyed his right title and interest in this patent to any other party, including

either Becca Toools, Inc., ("Becca") or Taco. Accordingly Rocheleau retains his right to appoint and revoke a power of attorney, and his power to Persson should stand unrevoked.

Under 37 CFR 3.73, the assignee of the entire interest may prosecute an application to the exclusion of the named inventor, or any previous assignee, and also revoke, or appoint, a power of attorney in the application or patent. This, however is contingent upon the putative assignee establishing its ownership of the application to the satisfaction of the Director. See 37 CFR 3.73(b). Ownership is established by submitting to the Office, in the Office file related to the matter in which action is sought to be taken, documentary evidence of a chain of title from the original owner to the assignee (*e.g.*, a copy of an executed assignment submitted for recording) or by specifying (*e.g.*, reel and frame number) where such evidence is recorded in the Office. Id. The submission establishing ownership must be signed by a party authorized to act on behalf of the assignee. Id.; see also MPEP 324. Inspection of the submission filed December 11, 2003 by Magidoff on behalf of Taco reveals that it facially lacks compliance with foregoing requirements of the regulation. As such, it was error for the USPTO to have accepted that Taco was the assignee of the entire interest much less changed the correspondence address and recognized the power to Magidoff.

A review of the assignment records of the USPTO indicates that the same 34 pages of documents have been twice recorded against the instant application at real 14152, frames 276 and 359, which purport to show a chain of title from Rocheleau to Becca and from Becca to Taco. While the documents were recorded against this application by Magidoff as "assignments", such recordation as an "assignment" was simply predicated upon the assertions made on the assignment recordation cover sheet tendered and executed by Magidoff pursuant to 37 CFR 3.31. However, as set forth in 37 CFR 3.54, and MPEP 317.03, the recordation of a document proffered as an "assignment" is **not** a determination by the Office of the validity of the document or the effect that document has on the title to an application or patent. As further noted by the foregoing authorities, when, as here, it becomes necessary, the USPTO will determine what effect a document has, including whether a party has the authority to take an action in a matter pending before the Office. See also MPEP 324.

Inspection of the copy of the the most relevant of the recorded documents, which is captioned as "Exclusive License and Option Agreement" ("Agreement") pursuant to 37 CFR 3.54 reveals that the Agreement is clearly self-styled (at frames 277 and 362) as a "License" Agreement. It is well settled that a license is merely a promise by the licensor [Becca] not to sue the licensee [Taco] for infringement, and, as such, title to the case does not change hands. Spindelfabrik Suessen-Schurr v. Schubert & Salzer, 829 F.2d. 1075, 1081, 4 USPQ2d 1044, 1048 (Fed. Cir. 1987), *cert. denied*, 116 S.Ct. 274 (1995). This characterization is reinforced by the express reservation clauses at paragraphs 6.1 and 6.2 (recorded at reel 14152 frames 282 and 365) wherein Becca (Rocheleau here acting as president of Becca) expressly retained legal title to the application and the sole right to initiate suit for infringement, and did not transfer any right, title, or interest to Taco. Thus, while there is no evidence of record at the USPTO that Rocheleau ever conveyed his right title and interest herein to Becca, the record is further conspicuously absent of any evidence that either Rocheleau or Becca manifested any intent whatsoever to further convey any interest to Taco. Thus, even if the submission filed December 11, 2003, by Magidoff on behalf of Taco had contended that the chain of title from Rocheleau [to Becca] to Taco was evidenced by the documents recorded at reel 14152 frames 276 *et seq.* and 359 *et seq.*, the recorded documents themselves would not have established

that Taco was the assignee of the entire interest, such that Taco could appoint and/or revoke a power of attorney, much less change the correspondence address.

This patent file is being returned to the Files Repository.

Inquiries related to this decision should be directed to the undersigned at (571) 272-3217.

Brian Hearn
Petitions Examiner
Office of Petitions

cc:

Barry G. Magidoff (for Taco)
Greenberg Traurig
885 Third Avenue
New York, New York 10022

UNITED STATES PATENT AND TRADEMARK OFFICE

COMMISSIONER FOR PATENTS
UNITED STATES PATENT AND TRADEMARK OFFICE
P.O. BOX 1450
ALEXANDRIA, VA 22313-1450
WWW.USPTO.GOV

Paper No. 4

BLAKELY SOKOLOFF TAYLOR & ZAFMAN
12400 WILSHIRE BOULEVARD
SEVENTH FLOOR
LOS ANGELES CA 90025

COPY MAILED

JUN 2 7 2003

OFFICE OF PETITIONS

In re Application of
Kari T. Teraslinna
Application No. 09/764,486
Filed: January 9, 2001
Attorney Docket No. 05043P011

DECISION ON PETITION
UNDER 37 CFR 1.137(b)

This is a decision on the petition, filed May 21, 2003, under 37 CFR 1.137(f), which is being treated as a petition under 37 CFR 1.137(b) to revive the instant nonprovisional application.

The petition is dismissed as **MOOT**.

In the instant application, the Office was notified within forty-five (45) days, of the foreign filing of an application. Therefore, this application is not regarded as abandoned. As such, the filing of a petition to revive is unnecessary and is dismissed as involving a moot issue. See Notice published on www.USPTO.gov on June 6, 2003, which clarifies the USPTO's interpretation of the provisions of 35 U.S.C. § 122(b)(2)(B)(ii)-(iv).

Since this application is not in fact abandoned for the reason stated above, the petition fee of $1300 is being credited to Deposit Account No. 02-2666 as authorized.

This application is being forwarded to Technology Center Art Unit 2157 for examination in due course.

Any inquiries concerning this decision may be directed to the undersigned at (703) 305-8859.

Karen Creasy

Karen Creasy
Petitions Examiner
Office of Petitions
Office of the Deputy Commissioner
for Patent Examination Policy

UNITED STATES PATENT AND TRADEMARK OFFICE

COMMISSIONER FOR PATENTS
UNITED STATES PATENT AND TRADEMARK OFFICE
WASHINGTON, D.C. 20231
www.uspto.gov

Paper No. 5

MAILED

JUN 0 3 2003

Technology Center 2100

OPPENHEIMER WOLFF & DONNELLY LLP
1400 Page Mill Road
Palo Alto, CA 94304-1124

In re Application of: Christopher R. Sheedy, et al.
Application No. 09/764,526
Filed: January 17, 2001
For: METHOD AND APPARATUS FOR VERSIONING STATICALLY BOUND FILES

DECISION ON REQUEST FOR WITHDRAWAL AS ATTORNEY

This is a decision on the Request To Withdraw from Representation filed May 16, 2003.

A grantable request to withdraw as attorney of record should indicate thereon the present mailing addresses of the attorney(s) who is/are withdrawing from the record and of the applicant. The request for withdrawal must be signed by every attorney seeking to withdraw or contain a clear indication that one attorney is signing on behalf of another/others. A request to withdraw will not be approved unless at least 30 (thirty) days would remain between the date of approval and the later of the expiration date of a time to file a response or the expiration date of the maximum time period which can be extended under 37 C.F.R. § 1. 136(a). The effective date of withdrawal being the date of decision and not the date of request. See M.P.E.P. § 402.06. 37 C.F.R. § 1.36 further requires that the applicant or patent owner be notified of the withdrawal of the attorney or agent.

The request is **GRANTED**.

All future communications from the Office will be directed to the below-listed address until otherwise notified by applicant. This correspondence address is provided by the withdrawn attorney(s). Applicant is reminded of the obligation to promptly notify the Patent and Trademark Office (Office) of any change in correspondence address to ensure receipt of all communications from the Office.

Serial No. 09/764,526
Decision on Petition

For Vincent N. Trans
Special Programs Examiner
Technology Center 2100
Computer Architecture and Software
(703) 305-9750

cc: HEWLETT-PACKARD COMPANY
Intellectual Property Administration
P.O. Box 272400
Fort Collins, CO 80527-2400
Attn: Bill Streeter

SPE RESPONSE FOR CERTIFICATE OF CORRECTION

DATE : 8/31/09 **Paper No.:** —

TO SPE OF : ART UNIT 2438

SUBJECT : Request for Certificate of Correction for Appl. No.: 9/764536 Patent No.: 6952772 B2

Please respond to this request for a certificate of correction within 7 days.

FOR IFW FILES:

Please review the requested changes/corrections as shown in the **COCIN** document(s) in the IFW application image. No new matter should be introduced, nor should the scope or meaning of the claims be changed.

Please complete the response (see below) and forward the completed response to scanning using document code **COCX**.

FOR PAPER FILES:

Please review the requested changes/corrections as shown in the attached certificate of correction. Please complete this form (see below) and forward it with the file to:

Certificates of Correction Branch (CofC)
Randolph Square – 9D10-A
Palm Location 7580

Virginia Tolbert
Certificates of Correction Branch
571-272-0460

Thank You For Your Assistance

The request for issuing the above-identified correction(s) is hereby:
Note your decision on the appropriate box.

- XXX ☐ **Approved** — **All** changes apply.
- ☐ **Approved in Part** — Specify below which changes **do not** apply.
- ☐ **Denied** — State the reasons for denial below.

Comments: ALL Approved

/Gilberto Barron Jr/ SPE 2432 6/21/2010

UNITED STATES PATENT AND TRADEMARK OFFICE

COMMISSIONER FOR PATENTS
UNITED STATES PATENT AND TRADEMARK OFFICE
P.O. BOX 1450
ALEXANDRIA, VA 22313-1450
WWW.USPTO.GOV

Paper No. 7

IBM Corporation
3039 Cornwallis Road
Dept. T81/Bldg. 503
P.O. Box 12195
Research Triangle Park, NC 27709

COPY MAILED

JUL 23 2003

OFFICE OF PETITIONS

In re Application of :
John R. Hind, et. al. :
Application No. 09/764,541 :
Filed: January 17, 2001 :
Attorney Docket No. RSW920010013US1 :

ON PETITION

This is a decision on the petition under 37 CFR 1.137(b), filed July 7, 2003, and supplemented on July 17, 2003, to revive the above-identified application.

The above-identified application became abandoned for failure to reply in a timely manner to the Notice to File Corrected Application Papers mailed March 30, 2001. The Notice set a period for reply of two (2) months from the mail date of the Notice. No extensions of time under the provisions of 37 CFR 1.136(a) were obtained. Accordingly, the above-identified application became abandoned after midnight May 30, 2001.

In response to the Notice to File Corrected Application Papers, petitioner submitted nine (9) sheets of drawings containing figures 1-9.

The petition is **GRANTED**.

The application is being forwarded to the Office of Initial Patent Examination for further processing.

Telephone inquiries concerning this decision should be directed to Andrea Smith at (703) 308-6711.

Andrea Smith
Petitions Examiner
Office of Petitions
Office of the Deputy Commissioner
for Patent Examination Policy

UNITED STATES PATENT AND TRADEMARK OFFICE

COMMISSIONER FOR PATENTS
UNITED STATES PATENT AND TRADEMARK OFFICE
WASHINGTON, DC 20231
www.uspto.gov

MAIL Paper No. 7

JUL 11 2002

DIRECTOR OFFICE
TECHNOLOGY CENTER 2600

Myers Bigel Sibley & Sajovec
Post Office Drawer 37428
Raleigh, NC 27627

In re Application of
William J. Grasty, Jr.
Application No. 09/764,544
Filed: 1/18/2001
Attorney Docket No. 9204-5
For: VIDEO AMPLIFIER CIRCUITS FOR MULTI-OUTPUT DISTRIBUTION OF VIDEO SIGNALS

DECISION ON REQUEST TO WITHDRAW AS ATTORNEY

This is a decision on the request to withdraw as attorney of record filed June 11, 2002.

A grantable request to withdraw as attorney of record should indicate thereon the present mailing addresses of the attorney(s) who is/are withdrawing from the record and of the applicant. The request for withdrawal must be signed by every attorney seeking to withdraw or contain a clear indication that one attorney is signing on behalf of another/others. A request to withdraw will not be approved unless at least 30 (thirty) days would remain between the date of approval and the later of the expiration date of a time to file a response or the expiration date of the maximum time period which can be extended under 37 C.F.R. § 1.136(a). The effective date of withdrawal being the date of decision and not the date of request. See M.P.E.P. § 402.06. 37 C.F.R. § 1.36 further requires that the applicant or patent owner be notified of the withdrawal of the attorney or agent.

The request meets all the above-listed requirements. The request is **GRANTED**.

All future communications from the Office will be directed to the address listed below until otherwise notified by applicant. Applicant is reminded of the obligation to promptly notify the Patent and Trademark Office of any change in correspondence address to ensure receipt of all communications from the Office.

Reinhard J. Eisenzopf
Special Program Examiner
Technology Center 2600
Communications
(703) 305-4711

cc: Don Witmer
Chairman and Chief Executive Officer Home Director
C/O Digital Interiors Inc
7132 Santa Teresa BLvd
San Jose CA 95139

SPE RESPONSE FOR CERTIFICATE OF CORRECTION

Paper No.: _____

DATE : 2/21/2007

TO SPE OF : ART UNIT 2800 (2811)

SUBJECT : Request for Certificate of Correction on Patent No.: 6,710,405

A response is requested with respect to the accompanying request for a certificate of correction.

Please complete this form and forward within **7** days to: **Scanning customer Support**

Send copy also via PTO mail to:
Certificates of Correction Branch – 2900 South Tower 9A39A
Palm location **7580** - Tel. No. 308-8309

With respect to the change(s) requested, correcting Office and/or Applicant's errors, should the patent read as shown in the certificate of correction? No new matter should be introduced, nor should the scope or meaning of the claims be changed.

Ernest C. White, LIE - 308-9390x122
Certificates of Correction Branch

Thank You For Your Assistance

The request for issuing the above-identified correction(s) is hereby:
Note your decision on the appropriate box.

- ☐ **Approved** — **All** changes apply.
- ☒ **Approved in Part** — Specify below which changes **do not** apply.
- ☐ **Denied** — State the reasons for denial below.

Comments: The changes in Item (54) and claims 19, 20, 21, 22, 23 (column 11, line 15), 24, 25 , 28 and 30 are denied.

SPE Lynne A. Gurley

Art Unit 2811

I hereby certify that this correspondence is being filed via EFS-Web with the United States Patent and Trademark Office on 1/24/07

TOWNSEND and TOWNSEND and CREW LLP

By: Tiffany Wu

PATENT
Attorney Docket No. 011775-010200US

IN THE UNITED STATES PATENT AND TRADEMARK OFFICE

In re application of:

Vladimir Tsukanov et al.

Patent No.: 6,710,405
(Appln. No.: 09/764,545)

Filed: January17, 2001

For: NON-UNIFORM POWER SEMICONDUCTOR AND METHOD FOR MAKING

Examiner: LOKE, STEVEN HO YIN

Art Unit: 2811

REQUEST FOR CERTIFICATE OF CORRECTION

Commissioner for Patents
P.O. Box 1450
Alexandria, VA 22313-1450

Sir:

Pursuant to 37 CFR §1.323, Applicant respectfully requests issuance of a Certificate of Correction correcting errors inadvertently left uncorrected by Applicant and typographical errors made at the time of printing of the patent for the above-referenced U.S. Patent. The desired corrections are set forth on form PTO/SB/44, enclosed.

Please deduct the fee, pursuant to 37 CFR §1.20(a), of $100.00 from deposit account 20-1430 and any additional fees associated with this Certificate. .

Respectfully submitted,

George B. F. Yee
Reg. No. 37,478

TOWNSEND and TOWNSEND and CREW LLP
Two Embarcadero Center, Eighth Floor
San Francisco, California 94111-3834
(415) 576-0200
Fax (415) 576-0300
GBFY/tfwrev. 10/03

60964851 v1

UNITED STATES PATENT AND TRADEMARK OFFICE
CERTIFICATE OF CORRECTION

PATENT NO. : 6,710,405 B1

APPLICATION NO.: 09/764,545

ISSUE DATE : March 23, 2004

INVENTOR(S) : Vladimir Tsukanov and Nathan Zommer

It is certified that an error appears or errors appear in the above-identified patent and that said Letters Patent is hereby corrected as shown below:

Title Page:

At Item (75), please delete "Nathan Zommer, Los Altos, CA (US); Vladimir Tsukanov, Mountain View, CA (US)" and insert -- Vladimir Tsukanov, Mountain View, CA (US); Nathan Zommer, Los Altos, CA (US)--. Yes

At Item (54), please delete "DEVICE" and insert --AND METHOD FOR MAKING--. No

In the Claims:

Claim 19, Column 11, Line 4, please delete "1" and insert --10--. No
Claim 20, Column 11, Line 7, please delete "1" and insert --10--. No
Claim 21, Column 11, Line 10, please delete "1" and insert --10--. No
Claim 22, Column 11, Line 12, please delete "1" and insert --10--. No
Claim 23, Column 11, Line 15, please delete "6" and insert --10--. No
Claim 23, Column 11, Line 16, please delete "consuming" and insert --consume--. Yes
Claim 24, Column 11, Line 18, please delete "1" and insert --10--. No
Claim 25, Column 11, Line 22, please delete "1" and insert --10--. No
Claim 28, Column 12, Line 3, please delete "1" and insert --10--. No
Claim 30, Column 12, Line 3, please delete "1" and insert --29--. No

MAILING ADDRESS OF SENDER (Please do not use customer number below):

TOWNSEND AND TOWNSEND AND CREW LLP
Two Embarcadero Center, Eighth Floor
San Francisco, CA 94111-3834

SPE RESPONSE FOR CERTIFICATE OF CORRECTION

Paper No.: _____

DATE : 9/6/2005

TO SPE OF : ART UNIT 2800 (2811)

SUBJECT : Request for Certificate of Correction on Patent No.: 6,710,405

Attn: Lynne Gurley

A response is requested with respect to the accompanying request for a certificate of correction.

Please complete this form and forward within **7** days to: **Scanning customer Support**

Send copy also via PTO mail to:
Certificates of Correction Branch – 2900 South Tower 9A39A
Palm location **7580** - Tel. No. 308-8309

With respect to the change(s) requested, correcting Office and/or Applicant's errors, should the patent read as shown in the certificate of correction? No new matter should be introduced, nor should the scope or meaning of the claims be changed.

Ok to make changes in dependency as requested in COCIN? **(Reconsideration)**

Ernest C. White, LIE - 308-9390x122
Certificates of Correction Branch

Thank You For Your Assistance

The request for issuing the above-identified correction(s) is hereby:
Note your decision on the appropriate box.

- ☒ **Approved** — **All** changes apply.
- ☐ **Approved in Part** — Specify below which changes **do not** apply.
- ☐ **Denied** — State the reasons for denial below.

Comments:

Lynne A. Gurley SPE AU 2811

UNITED STATES PATENT AND TRADEMARK OFFICE

Commissioner for Patents
United States Patent and Trademark Office
P.O. Box 1450
Alexandria, VA 22313-1450
www.uspto.gov

Paper No. 13

DEREK S. JENNINGS
INTELLECTUAL PROPERTY LAW DEPT.
IBM CORPORATION
P.O. BOX 218
YORKTOWN, NY 10598

COPY MAILED
MAY 0 5 2004
OFFICE OF PETITIONS

In re Application of
Takatoshi Tsujimura et al
Application No. 09/764,621
Filed: January 18, 2001
Attorney Docket No. JP919990067US1

ON PETITION

This is a decision on the petition under 37 CFR 1.137(b), filed April 27, 2004, to revive the above-identified application.

The petition is **GRANTED**.

The above-identified application became abandoned for failure to reply in a timely manner to the non-final Office action mailed July 22, 2003, which set a shortened statutory period for reply of three (3) months. No extensions of time under the provisions of 37 CFR 1.136(a) were obtained. Accordingly, the above-identified application became abandoned on October 23, 2003.

It is not apparent whether the person signing the statement of unintentional delay was in a position to have firsthand or direct knowledge of the facts and circumstances of the delay at issue. Nevertheless, such statement is being treated as having been made as the result of a reasonable inquiry into the facts and circumstances of such delay. See 37 CFR 10.18(b) and Changes to Patent Practice and Procedure; Final Rule Notice, 62 Fed. Reg. 53131, 53178 (October 10, 1997), 1203 Off. Gaz. Pat. Office 63, 103 (October 21, 1997). In the event that such an inquiry has not been made, petitioner must make such an inquiry. If such inquiry results in the discovery that it is not correct that the entire delay in filing the required reply from the due date for the reply until the filing of a grantable petition pursuant to 37 CFR 1.137(b) was unintentional, petitioner must notify the Office.

There is no indication that the person signing the instant petition was ever given a power of attorney or authorization of agent to prosecute the above-identified application. If the person signing the instant petition desires to receive future

correspondence regarding this application, the appropriate power of attorney or authorization of agent must be submitted. While a courtesy copy of this decision is being mailed to the person signing the instant petition, all future correspondence will be directed to the address of currently of record until such time as appropriate instructions are received to the contrary.
Telephone inquiries concerning this decision should be directed to Wan Laymon at (703) 305-9282.

The application file is being forwarded to Technology Center AU 2871.

Wan Laymon

Wan Laymon
Petitions Examiner
Office of Petitions
Office of the Deputy Commissioner
for Patent Examination Policy

cc: McGINN & GIBB
8321 OLD COURTHOUSE ROAD
SUITE 200
VIENNA, VA 22182-3817

UNITED STATES PATENT AND TRADEMARK OFFICE

COMMISSIONER FOR PATENTS
UNITED STATES PATENT AND TRADEMARK OFFICE
P.O. BOX 1450
ALEXANDRIA, VA 22313-1450
www.uspto.gov

Paper No. 8

Bruce D. Jobse, Esq.
KUDIRKA & JOBSE, LLP
One State Street
Suite 800
Boston, MA 02109

MAILED
MAR 0 8 2004
Technology Center 2100

In re Application of:
Nathan Fullerton, et al.
Application No. 09/764,633
Filed: January 18, 2000
For: METHOD AND APPARATUS FOR DELIVERY AND PRESENTATION OF DATA

DECISION ON REQUEST TO WITHDRAW AS ATTORNEY OR AGENT

This is a decision on the Request To Withdraw from Representation filed February 26, 2004.

A grantable request to withdraw as attorney of record should indicate thereon the present mailing addresses of the attorney(s) who is/are withdrawing from the record and of the applicant. The request for withdrawal must be signed by every attorney seeking to withdraw or contain a clear indication that one attorney is signing on behalf of another/others. A request to withdraw will not be approved unless at least 30 (thirty) days would remain between the date of approval and the later of the expiration date of a time to file a response or the expiration date of the maximum time period which can be extended under 37 C.F.R. § 1. 136(a). The effective date of withdrawal being the date of decision and not the date of request. See M.P.E.P. § 402.06. 37 C.F.R. § 1.36 further requires that the applicant or patent owner be notified of the withdrawal of the attorney or agent.

The request filed February 26, 2004 meets all the requirements. Accordingly the request is **GRANTED**.

All future communications from the Office will be directed to the below-listed address until otherwise notified by applicant. This correspondence address is provided by the withdrawn attorney(s). Applicant is reminded of the obligation to promptly notify the Patent and Trademark Office (Office) of any change in correspondence address to ensure receipt of all communications from the Office.

James R. Matthews

For Vincent N. Trans
Special Program Examiner
Technology Center 2100
Computer Architecture, Software, and
Information Security
703-305-9750

cc: Mr. Irv Yacht
Chief Executive Officer
IDEAL CONDITIONS, INC.
10646 Boca Woods Lane
Boca Raton, FL 33428

UNITED STATES PATENT AND TRADEMARK OFFICE

COMMISSIONER FOR PATENTS
UNITED STATES PATENT AND TRADEMARK OFFICE
P.O. BOX 1450
ALEXANDRIA, VA 22313-1450
WWW.USPTO.GOV

Paper No. 13

CRYOVAC, INC.
PO BOX 464
DUNCAN, SC 29334

COPY MAILED

AUG 0 4 2003

OFFICE OF PETITIONS

In re Application of
Ramesh et al.
Application No. 09/764,673
Filed: January 18, 2001
Attorney Docket No. 42035-06

ON PETITION

This decision concerns the June 27, 2003 "Petition under 37 CFR 1.181 for Recision of Notice of Abandonment."

The petition is **GRANTED.**

On November 20, 2002, a non-final Office action was mailed, setting forth a 3-month shortened statutory reply period.

On June 18, 2003, a Notice of Abandonment was mailed, stating that the application had become abandoned for failure to timely respond to the November 20, 2002 non-final Office Action.

The instant petition asserts that a reply to the November 20, 2002 non-final Office Action was mailed on March 20, 2003 along with a request for a 1-month extension of the time and the extension-of-time fee, and, according to Assignee's postcard receipt date-stamped by the USPTO, was received in the USPTO on March 26, 2003.

The Office has located in the application file an amendment bearing a March 20, 2003 Certificate of Mailing, and a "Request for Extension of Time under 37 CFR 1.136(a)," authorizing the USPTO to charge the $110 1-month extension-of-time fee to Deposit Account No. 07-1765. The fee was processed on March 31, 2003.

In view of the above, the petition is granted. No petition fee is owed.

The holding of abandonment in this application is withdrawn.

The June 18, 2003 Notice of Abandonment is hereby vacated.

The application file is being forwarded to Technology Center 3700 for review of the amendment filed on March 26, 2003.

Telephone inquiries should be directed to the undersigned at (703) 308-0763.

RC Tang
Petitions Attorney
Office of Petitions

UNITED STATES PATENT AND TRADEMARK OFFICE

COMMISSIONER FOR PATENTS
UNITED STATES PATENT AND TRADEMARK OFFICE
P.O. BOX 1450
ALEXANDRIA, VA 22313-1450
www.uspto.gov

MAGINOT, MOORE & BECK LLP
BANK ONE CENTER/TOWER
111 MONUMENT CIRCLE, STE. 3000
INDIANAPOLIS, IN 46204-5115

COPY MAILED

AUG 0 4 2005

OFFICE OF PETITIONS

In re Application of	:	
David W. Bell	:	ON PETITION
Application No. 09/764,691	:	
Filed: January 18, 2001	:	
Attorney Docket Number:	:	
1920-0005	:	

This is a decision on the Petition under 37 CFR 1.137(a), filed December 10, 2004 (Certificate of Mailing dated December 7, 2004, to revive the above-identified application. The delay in treating this petition is regretted.

This Petition is hereby **granted**.

The above-identified application became abandoned for failure to timely and properly reply to the Notice of Allowance and Issue Fee Due, mailed August 26, 2004. The Notice set a non-extendable three (3) month period for reply. No response having been received, the application became abandoned November 27, 2004. The mailing of this Decision precedes the mailing of a Notice of Abandonment.

With the instant petition, Applicant has demonstrated that the abandonment of the application was unavoidable, thus satisfying the requirements of a grantable petition under 37 CFR 1.137(a). Applicant has also included the issue fee. Accordingly, the petition is granted.

This application is being referred to Publishing Division for processing into a patent.

Telephone inquiries concerning this decision should be directed to the undersigned at (703) 305-0014.

Derek L. Woods
Petitions Attorney
Office of Petitions

UNITED STATES PATENT AND TRADEMARK OFFICE

COMMISSIONER FOR PATENTS
P.O. BOX 1450
ALEXANDRIA, VA 22313-1450
www.uspto.gov

SEP - 2 2003

Paper No. 24

In re Application of
Patrick H. Wnek
Application No. 09/764,718
Filed: January 18, 2001
Attorney Docket No. 5887.00

: DECISION ON PETITION

This is a decision on the petition filed on August 7, 2003 by which petitioner requests withdrawal of the examiner's holding that this application stands abandoned as a result of the dismissal of petitioner's appeal, no claims standing allowed after that dismissal. No fee is required for this petition.

The petition is granted.

A review of the record shows that after filing a notice of appeal on January 8, 2003, petitioner timely filed an appeal brief. The examiner held the brief to be defective for failure to comply with the requirements of 37 CFR 1.192(c)(6)-(9), specifically identifying the reasons for this holding. The examiner's letter notifying petitioner of this circumstance was mailed on June 3, 2003, and the period for reply thereto was set to expire one month therefrom, and was stated to be subject to the extension of time provisions of 37 CFR 1.136. See paper No. 18. See also 37 CFR 1.192(d). See also the discussion regarding the response period as set forth *infra*.

The record further shows that petitioner filed a reply to paper No. 18, and included therewith a corrected appeal brief. This reply was timely filed on June 23, 2003, and was entered in the record as paper No. 19. The examiner thereafter held the corrected appeal brief to be defective "for at least the reason that applicant submits a revised brief which is not compliant with 37 CFR 1.192(C) (*sic*, "1.192(c)") for the same reasoning has (*sic*, "as") presented in the Notification of Non-compliance mailed June 3, 2003 because the arguments section is not separated by separate headings for each issue on appeal." The examiner also pointed out that the revised appeal brief lacked an argument in support of the patentability of each claim stated by petitioner to not stand or fall with the other claims grouped together in a single ground of rejection. As a result of the failure of petitioner to supply an acceptable corrected brief, the examiner dismissed the appeal and held the application to have become abandoned. See paper Nos. 20 and 21.

The examiner's holding of abandonment was in error, because at the time that the examiner promulgated paper Nos. 20 and 21, the application was not abandoned. Paper No. 18, the examiner's original notice that the appeal brief filed on March 17, 2003 was informal under 37 CFR 1.192(c)(6)-(9) set a **time period** for response in accordance with 37 CFR 1.192(d). That period was stated to be:

> "the longest of any of the following three **TIME PERIODS: (1) ONE MONTH or THIRTY DAYS** from the mailing date of this Notification, whichever is longer; (2) **TWO MONTHS** from the date of the notice of appeal; or (3) within the period for reply to the action from which this appeal was taken." (Emphasis in the original.)

Paper No. 18 also stated:

> "**EXTENSIONS OF THESE TIME PERIODS MAY BE GRANTED UNDER 37 CFR 1.136.**" (Emphasis in the original.)

In addition, 37 CFR 1.191(d) reads, *inter alia*, "The time periods set forth in §§ 1.191 and 1.192 are subject to the provisions of § 1.136 for patent applications ... ."

Applying these principles, it is clear that the application was pending due to the timely filing of paper No. 19, the corrected appeal brief. The longest period of time to be selected from the options provided by paper No. 18, the notice to petitioner that the corrected appeal brief was defective, would have been one month from June 23, 2003. Therefore, the Notice of Abandonment was prematurely mailed. Further, petitioner has attached three copies of another corrected appeal brief to the petition, and the application also contains an authorization to charge any additional 37 CFR 1.17 fees to Deposit Account 04-1415. Therefore, this corrected appeal brief is timely filed since it has been received prior to November 23, 2003 with a constructive petition for a one month extension of time.

Accordingly, the Notice of Abandonment is hereby vacated, the holding of abandonment is withdrawn, and the application is restored to pending status. The application is being forwarded to the Head Supervisory Applications Examiner to charge Deposit Account 04-1415 in the amount of $110.00 for a one month extension of time. Thereafter, the application will be forwarded to the examiner for action on the appeal brief filed on August 7, 2003.

PETITION GRANTED.

E. Rollins-Cross, Director, Patent
Examining Groups 3710 and 3720

Dorsey & Whitney, LLP
Intellectual Property Department
370 Seventeenth Street
Suite 4700
Denver, CO 80202-5647

UNITED STATES PATENT AND TRADEMARK OFFICE

COMMISSIONER FOR PATENTS
UNITED STATES PATENT AND TRADEMARK OFFICE
P.O. BOX 1450
ALEXANDRIA, VA 22313-1450
www.uspto.gov

WOMBLE CARLYLE SANDRIDGE &
RICE, PLLC
P.O. BOX 7037
ATLANTA, GA 30357-0037

COPY MAILED

MAY 2 0 2005

OFFICE OF PETITIONS

In re Application of :
Patrick H. Wnek :
Application No. 09/764,718 : ON PETITION
Filed: January 18, 2001 :
Attorney Docket No. 5887.00 :

This is a decision in response to the petition under 37 CFR 1.137(b), filed March 14, 2005, to revive the above-identified application.

The petition is **granted**.

A final Office action was mailed October 17, 2002. In response to the final Office action, Applicant filed a Notice of Appeal which was received in the Office on January 16, 2003. The deadline for filing the appeal brief was April 17, 2002.

On March 17, 2003, Applicant filed a request for a two (2) month extension-of-time and an Appeal Brief. The Appeal Brief was defective. Applicant was so notified in a Notification of Noncompliance with 37 CFR 1.192(c), mailed June 3, 2003. Applicant filed a Response to Notification of Non-Compliance With 37 CFR 1.192(c) on June 23, 2003 which included a Replacement Appeal Brief. The Replacement Appeal Brief was also not in compliance with 37 CFR 1.192(c). Applicant was so notified in an Office communication mailed July 21, 2003. The Office communication also informed Applicant that the application was now abandoned. *See* MPEP §§ 706.07(h) and 1215.01.

Applicant filed a petition to withdraw the holding of abandonment of the application, along with a Second Replacement Applicant's Brief on Appeal, on August 7, 2003. In the petition applicant argued that the "replacement Brief filed on June 23, 2003" complied with 37 CFR 1.192(c)(7). The petition was granted in a Decision mailed September 2, 2003, because a review of the file revealed that Applicant's time to file an appeal brief included extensions-of-time under 37 CFR 1.136, and the

maximum period to file an appeal brief had not expired. As such, the application was not abandoned.

The Second Replacement Applicant's Brief on Appeal, filed August 7, 2003, failed to place the application in condition for allowance. Applicant was so notified in an Advisory Action mailed October 29, 2003. Applicant was further advised that the time for filing an appeal brief continued to run from the filing of the Notice of Appeal. A Notice of Abandonment was mailed on October 15, 2004. The Notice of Abandonment included an Office communication informing Applicant that the application was abandoned for failure to timely file a proper Appeal Brief.

With the instant petition, Applicant has filed a Request for Continued Examination ("RCE") and a submission in the form of an Amendment.

The petition fee, $1500.00, and RCE filing fee, $790.00, have been charged to deposit account 09-0528 as authorized in the Fee Transmittal filed with the petition.

This application is being returned to Technology Center 3727 for processing of the RCE and Amendment in due course.

Telephone inquiries related to this decision may be directed to the undersigned at (571) 272-3232.

Derek L. Woods
Petitions Attorney
Office of Petitions

UNITED STATES PATENT AND TRADEMARK OFFICE

Commissioner for Patents
United States Patent and Trademark Office
P.O. Box 1450
Alexandria, VA 22313-1450
www.uspto.gov

AKERMAN SENTERFITT
ESPERANTE BUILDING, SUITE 400
222 LAKEVIEW AVENUE
P.O. BOX 3188
WEST PALM BEACH, FL 33402-3188

COPY MAILED

MAR 1 0 2006

OFFICE OF PETITIONS

In re Application of	:	
John David Bacchiaz et al	:	
Application No. 09/764,729	:	ON PETITION
Filed: January 17, 2001	:	
Attorney Docket No. 9300-1		

This is a decision on the petition filed, March 2, 2006 under 37 CFR 1.313(c)(2) to withdraw the above-identified application from issue after payment of the issue fee.

The petition is **GRANTED**.

The above-identified application is withdrawn from issue for consideration of a submission under 37 CFR 1.114 (request for continued examination). See 37 CFR 1.313(c)(2).

Petitioner is advised that the issue fee paid on October 6, 2005 in the above-identified application cannot be refunded. If, however, the above-identified application is again allowed, petitioner may request that it be applied towards the issue fee required by the new Notice of Allowance.[1]

Telephone inquiries should be directed to Irvin Dingle at (571) 272-3210.

This matter is being referred to Technology Center AU 2635 for processing of the request for continued examination under 37 CFR 1.114 and for consideration of the concurrently filed Information Disclosure Statement.

Irvin Dingle
Petitions Examiner
Office of Petitions

---

[1] The request to apply the issue fee to the new Notice may be satisfied by completing and returning the new Issue Fee Transmittal Form PTOL-85(b), which includes the following language thereon: Commissioner for Patents is requested to apply the Issue Fee and Publication Fee (if any) or re-apply any previously paid issue fee to the application identified above. Petitioner is advised that, whether a fee is indicated as being due or not, the Issue Fee Transmittal Form **must** be completed and timely submitted to avoid abandonment. Note the language in bold text on the first page of the Notice of Allowance and Fee(s) Due (PTOL-85).

UNITED STATES PATENT AND TRADEMARK OFFICE

Commissioner for Patents
United States Patent and Trademark Office
Washington, D.C. 20231
www.uspto.gov
DIW 11-01

Paper No. 7

FITZPATRICK CELLA HARPER & SCINTO
30 ROCKEFELLER PLAZA
NEW YORK, NY 10112

COPY MAILED

NOV 29 2001

OFFICE OF PETITIONS

In re Application of	:	
Glenn McGarry	:	
Application No. 09/764,782	:	DECISION REFUSING STATUS
Filed: 17 January, 2001	:	UNDER 37 CFR 1.47(a)
Attorney Docket No. 2785.100	:	

This is in response to the petition filed under 37 CFR 1.47(a) on 15 October, 2001.

The petition is **DISMISSED**.

Rule 47 applicant is given TWO MONTHS from the mailing date of this decision to reply, correcting the below-noted deficiencies. Any reply should be entitled "Request for Reconsideration of Petition Under 37 CFR 1.47(a)," and should only address the deficiencies noted below, except that the reply may include an oath or declaration executed by the non-signing inventor. **FAILURE TO RESPOND WILL RESULT IN ABANDONMENT OF THE APPLICATION.** Extensions of time may be obtained in accordance with 37 CFR 1.136(a).

The above-identified application was filed on 17 January, 2001, without an executed oath or declaration. Accordingly, on 7 May, 2001,[1] a Notice to File Missing Parts of Nonprovisional Application was mailed, requiring a signed oath or declaration and a surcharge for its late filing. In response, on 15 October,

[1]It is noted that the Notice to File Missing Parts contained in the official file shows a mailing date of 7 March, 2001. Apparently, the actual Notice sent to applicant was mailed on 7 May, 2001, however.

2001 (certificate of mailing date 9 October, 2001), the present petition was filed, accompanied by a request and payment of the fee for a three (3) month extension of time, a declaration naming Glenn McGarry and Wesley Fedorchak as joint inventors and signed by joint inventor McGarry on behalf of himself and joint inventor Fedorchak, and payment of the petition fee and surcharge.

Petitioners assert that Fedorchak has refused orally to sign the declaration.

A grantable petition under 37 CFR 1.47(a) requires:

(1) proof that the non-signing inventor cannot be reached or located, notwithstanding diligent effort, or refuses to sign the oath or declaration after having been presented with the application papers (specification, claims and drawings);

(2) an acceptable oath or declaration in compliance with 35 U.S.C. §§ 115 and 116;

(3) the petition fee;

(4) a surcharge of $130 or $65 (small entity) if the petition and/or declaration is not filed at the time of filing the application, and

(5) a statement of the last known address of the non-signing inventor.

The petition lacks item (1). In regards to item (1), petitioners have not submitted sufficient evidence to prove that a copy of the application was sent or given to the non-signing inventor. Petitioners must show proof that a copy of the application (specification including claims, drawings, if any, and the Declaration) were sent or given to the non-signing inventor for review.[2] Petitioners should provide a copy of the cover letter transmitting the application papers to the non-signing inventor or details given in an affidavit or declaration of facts by a person having first hand knowledge of the details.

The declaration of registered patent attorney Douglas Sharott, in which attorney Sharott states that a copy of the application was sent to Fedorchak, is not sufficient to show that a copy of the application was mailed because it is unclear whether Sharott has first-hand knowledge of the mailing. Petitioners should provide a copy of the cover letter transmitting the application papers (specification, including claims, drawings, if any, and the declaration) to the non-signing inventor or details given in affidavit or declaration of facts by a person having first hand

[2] MPEP 409.03(d).

knowledge of the details.

Petitioners must also present proof that the non-signing inventor refuses to sign the declaration after being sent or given a copy of the application papers. If there is a written refusal, a copy of the written refusal should be submitted with any renewed petition. If the refusal was made orally to a person, then that person must provide details of the refusal in an affidavit or declaration of facts.

Additionally, it is noted that the mailing address listed in the declaration for both joint inventors is 1 World Trade Center, 38th Floor, New York, NY. In view of the terrorist attacks on September 11, 2001, it is obvious that this is no longer a valid address. Petitioners should submit a new oath or declaration listing the current mailing addresses for the inventors.

Further correspondence with respect to this matter should be addressed as follows:

By mail: Assistant Commissioner for Patents
Box DAC
Washington, D.C. 20231

By FAX: (703) 308-6916
Attn: Office of Petitions

By hand: Crystal Plaza Four, Suite 3C23
2201 S. Clark Place
Arlington, VA

Telephone inquiries related to this decision should be directed to the undersigned at 703-308-6918.

D Wood

Douglas I. Wood
Petitions Attorney
Office of Petitions
Office of the Deputy Commissioner
for Patent Examination Policy

UNITED STATES PATENT AND TRADEMARK OFFICE

Commissioner for Patents
United States Patent and Trademark Office
Washington, D.C. 20231
www.uspto.gov
DIW 11-01

OIPE JC139
JAN 29 2002
PATENT & TRADEMARK OFFICE

Paper No. 7

FITZPATRICK CELLA HARPER & SCINTO
30 ROCKEFELLER PLAZA
NEW YORK, NY 10112

2785.100
DDS
1/29/02
12/11/01 mg

COPY MAILED

NOV 29 2001

OFFICE OF PETITIONS

In re Application of	:	
Glenn McGarry	:	
Application No. 09/764,782	:	DECISION REFUSING STATUS
Filed: 17 January, 2001	:	UNDER 37 CFR 1.47(a)
Attorney Docket No. 2785.100	:	

This is in response to the petition filed under 37 CFR 1.47(a) on 15 October, 2001.

The petition is **DISMISSED**.

Rule 47 applicant is given TWO MONTHS from the mailing date of this decision to reply, correcting the below-noted deficiencies. Any reply should be entitled "Request for Reconsideration of Petition Under 37 CFR 1.47(a)," and should only address the deficiencies noted below, except that the reply may include an oath or declaration executed by the non-signing inventor. **FAILURE TO RESPOND WILL RESULT IN ABANDONMENT OF THE APPLICATION.** Extensions of time may be obtained in accordance with 37 CFR 1.136(a).

The above-identified application was filed on 17 January, 2001, without an executed oath or declaration. Accordingly, on 7 May, 2001,[1] a Notice to File Missing Parts of Nonprovisional Application was mailed, requiring a signed oath or declaration and a surcharge for its late filing. In response, on 15 October,

[1] It is noted that the Notice to File Missing Parts contained in the official file shows a mailing date of 7 March, 2001. Apparently, the actual Notice sent to applicant was mailed on 7 May, 2001, however.

RECEIVED

FEB 01 2002

OFFICE OF PETITIONS
DEPUTY A/C PATENTS

2001 (certificate of mailing date 9 October, 2001), the present petition was filed, accompanied by a request and payment of the fee for a three (3) month extension of time, a declaration naming Glenn McGarry and Wesley Fedorchak as joint inventors and signed by joint inventor McGarry on behalf of himself and joint inventor Fedorchak, and payment of the petition fee and surcharge.

Petitioners assert that Fedorchak has refused orally to sign the declaration.

A grantable petition under 37 CFR 1.47(a) requires:

(1) proof that the non-signing inventor cannot be reached or located, notwithstanding diligent effort, or refuses to sign the oath or declaration after having been presented with the application papers (specification, claims and drawings);

(2) an acceptable oath or declaration in compliance with 35 U.S.C. §§ 115 and 116;

(3) the petition fee;

(4) a surcharge of $130 or $65 (small entity) if the petition and/or declaration is not filed at the time of filing the application, and

(5) a statement of the last known address of the non-signing inventor.

The petition lacks item (1). In regards to item (1), petitioners have not submitted sufficient evidence to prove that a copy of the application was sent or given to the non-signing inventor. Petitioners must show proof that a copy of the application (specification including claims, drawings, if any, and the Declaration) were sent or given to the non-signing inventor for review.[2] Petitioners should provide a copy of the cover letter transmitting the application papers to the non-signing inventor or details given in an affidavit or declaration of facts by a person having first hand knowledge of the details.

The declaration of registered patent attorney Douglas Sharott, in which attorney Sharott states that a copy of the application was sent to Fedorchak, is not sufficient to show that a copy of the application was mailed because it is unclear whether Sharott has first-hand knowledge of the mailing. Petitioners should provide a copy of the cover letter transmitting the application papers (specification, including claims, drawings, if any, and the declaration) to the non-signing inventor or details given in affidavit or declaration of facts by a person having first hand

---

[2] MPEP 409.03(d).

knowledge of the details.

Petitioners must also present proof that the non-signing inventor refuses to sign the declaration after being sent or given a copy of the application papers. If there is a written refusal, a copy of the written refusal should be submitted with any renewed petition. If the refusal was made orally to a person, then that person must provide details of the refusal in an affidavit or declaration of facts.

Additionally, it is noted that the mailing address listed in the declaration for both joint inventors is 1 World Trade Center, 38th Floor, New York, NY. In view of the terrorist attacks on September 11, 2001, it is obvious that this is no longer a valid address. Petitioners should submit a new oath or declaration listing the current mailing addresses for the inventors.

Further correspondence with respect to this matter should be addressed as follows:

By mail: Assistant Commissioner for Patents
Box DAC
Washington, D.C. 20231

By FAX: (703) 308-6916
Attn: Office of Petitions

By hand: Crystal Plaza Four, Suite 3C23
2201 S. Clark Place
Arlington, VA

Telephone inquiries related to this decision should be directed to the undersigned at 703-308-6918.

D Wood

Douglas I. Wood
Petitions Attorney
Office of Petitions
Office of the Deputy Commissioner
for Patent Examination Policy

UNITED STATES PATENT AND TRADEMARK OFFICE

Commissioner for Patents
United States Patent and Trademark Office
Washington, D.C. 20231
www.uspto.gov
DIW 03-02

Paper No. 10

FITZPATRICK CELLA HARPER & SCINTO
30 ROCKEFELLER PLAZA
NEW YORK, NY 10112

COPY MAILED

MAR 2 5 2002

OFFICE OF PETITIONS

In re Application of	:	
McGarry et al.	:	
Application No. 09/764,782	:	DECISION ACCORDING STATUS
Filed: 17 January, 2001	:	UNDER 37 CFR 1.47(a)
Attorney Docket No. 2785.100	:	

This is in response to the renewed petition filed under 37 CFR 1.47(a) on 29 January, 2002.

The petition is **GRANTED**.

Petitioner has shown that the non-signing inventor, Wesley Fedorchak, has refused to join in the filing of the above-identified application after having been mailed a copy of the application papers. However, joint inventor Fedorchak has not returned an executed declaration naming him as a joint inventor along with Glenn McGarry.

The above-identified application and papers have been reviewed and found in compliance with 37 CFR 1.47(a). This application is hereby accorded Rule 1.47(a) status.

As provided in Rule 1.47(c), this Office will forward notice of this application's filing to the non-signing inventor at the address given in the declaration. Notice of the filing of this application will also be published in the Official Gazette.

The application will be forwarded to the Office of Initial Patent Examination for further processing.

Telephone inquiries related to this decision should be directed to the undersigned at 703-308-6918.

D Wood

Douglas I. Wood
Petitions Attorney
Office of Petitions
Office of the Deputy Commissioner
for Patent Examination Policy

UNITED STATES PATENT AND TRADEMARK OFFICE

Commissioner for Patents
United States Patent and Trademark Office
Washington, D.C. 20231
www.uspto.gov
DIW 03-02

Wesley Fedorchak
3708 Northgate Wood Ct.
Walnut Creek, CA 94598

COPY MAILED
MAR 2 5 2002
OFFICE OF PETITIONS

In re Application of
McGarray et al.
Application No. 09/764,782
Filed: 17 January, 2001
For: SYSTEM FOR CAPTURING TRADE INFORMATION

Dear Mr. Fedorchak:

You are named as a joint inventor in the above identified United States patent application, filed under the provisions of 35 U.S.C. 116 (United States Code), and 37 CFR 1.47(a), Rules of Practice in Patent Cases. Should a patent be granted on the application you will be designated therein as a joint inventor.

As a named inventor you are entitled to inspect any paper in the file wrapper of the application, order copies of all or any part thereof (at a prepaid cost per 37 CFR 1.19) or make your position of record in the application. Alternatively, you may arrange to do any of the preceding through a registered patent attorney or agent presenting written authorization from you. If you care to join the application, counsel of record (see below) would presumably assist you. Joining in the application would entail the filing of an appropriate oath or declaration by you pursuant to 37 CFR 1.63.

Telephone inquiries regarding this communication should be directed to Petitions Attorney Douglas I. Wood at 703/308-6918. Requests for information regarding your application should be directed to the File Information Unit at 703/308-2733. Information regarding how to pay for and order a copy of the application, or a specific paper in the application, should be directed to Certification Division at 703/308-9726 or 1-800-972-6382 (outside the Washington D.C. area).

Beverly M. Flanagan
Supervisory Petitions Examiner
Office of Petitions
Office of the Deputy Commissioner
for Patent Examination Policy

FITZPATRICK CELLA HARPER & SCINTO
30 ROCKEFELLER PLAZA
NEW YORK, NY 10112

UNITED STATES PATENT AND TRADEMARK OFFICE

Commissioner for Patents
United States Patent and Trademark Office
P.O. Box 1450
Alexandria, VA 22313-1450
www.uspto.gov

BUCHANAN INGERSOLL, P.C.
ONE OXFORD CENTRE
301 GRANT STREET, 20TH FLOOR
PITTSBURGH, PA 15219

COPY MAILED

APR 1 1 2005

OFFICE OF PETITIONS

BEST AVAILABLE COPY

In re Application of
Julie A. Schwartz et al
Application No. 09/764,787
Filed: January 17, 2001
Attorney Docket No. 0002.US00

ON PETITION

This is a decision on the petition under 37 CFR 1.313(c)(2), filed April 8, 2005, to withdraw the above-identified application from issue after payment of the issue fee.

The petition is **GRANTED**.

The above-identified application is withdrawn from issue for consideration of a submission under 37 CFR 1.114 (request for continued examination). See 37 CFR 1.313(c)(2).

Petitioner is advised that the issue fee paid on January 21, 2005 in the above-identified application cannot be refunded. If, however, the above-identified application is again allowed, petitioner may request that it be applied towards the issue fee required by the new Notice of Allowance.[1]

Telephone inquiries should be directed to Wan Laymon at (571) 272-3220.

This matter is being referred to Technology Center AU 3629 for processing of the request for continued examination under 37 CFR 1.114.

Wan Laymon
Wan Laymon
Petitions Examiner
Office of Petitions
Office of the Deputy Commissioner
for Patent Examination Policy

---

[1] The request to apply the issue fee to the new Notice may be satisfied by completing and returning the new Issue Fee Transmittal Form PTOL-85(b), which includes the following language thereon: "Commissioner for Patents is requested to apply the Issue Fee and Publication Fee (if any) or re-apply any previously paid issue fee to the application identified above." Petitioner is advised that, whether a fee is indicated as being due or not, the Issue Fee Transmittal Form must be completed and timely submitted to avoid abandonment. Note the language in bold text on the first page of the Notice of Allowance and Fee(s) Due (PTOL-85).

UNITED STATES PATENT AND TRADEMARK OFFICE

COMMISSIONER FOR PATENTS
UNITED STATES PATENT AND TRADEMARK OFFICE
WASHINGTON, D.C. 20231
www.uspto.gov

Paper No. 6

KEVIN J. ZILKA
SILICON VALLEY IP GROUP
P.O. BOX 721120
SAN JOSE, CA 95172-1120

COPY MAILED

APR 0 4 2002

OFFICE OF PETITIONS

In re Application of :
Roger Knobbe et al. :
Application No. 09/764,807 :
Filed: January 16, 2001 :
Attorney Docket No. NAI1P070/99.067.01 :

NOTICE

This is a notice regarding your request for acceptance of a fee deficiency submission under 37 CFR 1.28. On September 1, 1998, the Court of Appeals for the Federal Circuit held that 37 CFR 1.28(c) is the sole provision governing the time for correction of the erroneous payment of the issue fee as a small entity. **See DH Technology v. Synergystex International, Inc. 154 F.3d 1333, 47 USPQ2d 1865 (Fed. Cir. Sept. 1, 1998).**

The Office no longer investigates or rejects original or reissue applications under 37 CFR 1.56. **1098 Off. Gaz. Pat. Office 502 (January 3, 1989)**. Therefore, nothing in this Notice is intended to imply that an investigation was done.

Your fee deficiency submission under 37 CFR 1.28 is hereby **ACCEPTED**.

Inquiries related to this communication should be directed to the Office of Petitions Staff at (703) 305-9285.

This file is being forwarded to Technology Center 2600.

Irvin Dingle
Petitions Examiner
Office of Petitions
Office of the Deputy Commissioner
for Patent Examination Policy

UNITED STATES PATENT AND TRADEMARK OFFICE

Commissioner for Patents
United States Patent and Trademark Office
P.O. Box 1450
Alexandria, VA 22313-1450
www.uspto.gov

JIM SIMPSON
EDP BIOTECH CORPORATION
P.O. BOX 14156
KNOXVILLE, TN 37914

MAILED

MAR 15 2010

OFFICE OF PETITIONS

In re Application of	:	
Nancy Tommye JORDAN, et al	:	
Application No. 09/764,826	:	DECISION ON REQUEST FOR
Filed: January 17, 2001	:	REVOCATION OF POWER
Attorney Docket No. 03073.0001US2	:	OF ATTORNEY
	:	

This is a decision on the Request to Revoke the attorney or agent of record under 37 C.F.R. § 1.36(a), filed December 18, 2009.

The request is APPROVED.

A power of attorney, pursuant to § 1.32(b), may be revoked at any stage in the proceeding of a case by an applicant for patent (§ 1.41(b)) or an assignee of the entire interest of the applicant under § 3.71(b). Fewer than all of the applicants (or by fewer than the assignee of the entire interest of the applicant) may only revoke the power of attorney upon a showing of sufficient cause, and payment of the petition fee set forth § 1.17(h). For the assignee to take action a proper statement under § 3.73(b) is required.

All future communications from the Office will be directed to the address indicated below until otherwise properly notified.

Telephone inquiries concerning this decision should be directed to the undersigned at 571-272-6735.

/Diane C. Goodwyn/
Diane C. Goodwyn
Petitions Examiner
Office of Petitions

cc: LAW OFFICE OF VAN R. IRION, PLLC
9040 EXECUTIVE PARK DRIVE, SUITE 223
KNOXVILLE, TN 37923

UNITED STATES PATENT AND TRADEMARK OFFICE

Commissioner for Patents
United States Patent and Trademark Office
P.O. Box 1450
Alexandria, VA 22313-1450
www.uspto.gov

MAILED

MAR 15 2010

OFFICE OF PETITIONS

LAW OFFICE OF
VAN R. IRION, PLLC
9040 EXECUTIVE PARK DRIVE,
SUITE 223
KNOXVILLE, TN 37923

In re Patent No. 6,787,324	:	
Issue Date: September 7, 2004	:	
Application No. 09/764,826	:	ON PETITION
Filed: January 17, 2001	:	
Attorney Docket No. 03073-0001U2	:	

This is a decision on the petition under 37 CFR 1.378(c), filed December 18, 2009, to accept the delayed payment of a maintenance fee for the above-identified patent.

The petition is **DISMISSED**.

Any petition for reconsideration of this decision must be accompanied by the petition fee of $400 as set forth in 37 CFR 1.17(f). The petition for reconsideration must include the lacking item(s) noted below, since, after a decision on the petition for reconsideration, no further reconsideration or review of the matter will be undertaken by the Director.

A petition to accept the unintentionally delayed payment of a maintenance fee under 35 U.S.C. 41(c) and 37 CFR 1.378(c) must be accompanied by: (1) a statement that the delay was unintentional; (2) payment of the appropriate maintenance fee, unless previously submitted; and (3) payment of the surcharge set forth in 37 CFR 1.20(i)(2). This petition lacks item (3) above.

With respect to item 3: A review of the Office record shows that the surcharge submitted with the petition filed December 18, 2009 is insufficient, the current surcharge is $1640. The instant petition lacks the complete required surcharge as set forth in 37 CFR 1.20(i)(2). No consideration on the merits can be given until the required fee deficiency is remitted.

It is not apparent whether the person signing the statement of unintentional delay was in a position to have firsthand or direct knowledge of the facts and circumstances of the delay at issue. Nevertheless, such statement is being treated as having been made as the result of a reasonable inquiry into the facts and circumstances of such delay. In the event that such an inquiry has not been made, petitioner must make such an inquiry. If such inquiry results in the discovery that the delay in paying the maintenance fee under 37 CFR 1.378(c) was intentional, petitioner must notify the Office.

If reconsideration of this decision is desired, a petition for reconsideration under 37 CFR 1.378(e) must be filed within **TWO (2) MONTHS** from the mail date of this decision. No extension of this two-month time limit can be granted under 37 CFR 1.136(a) or (b). This is **not** a final agency action within the meaning of 5 U.S.C. § 704.

Further correspondence with respect to this matter should be addressed as follows:

By Mail: Mail Stop PETITION
Commissioner for Patents
Post Office Box 1450
Alexandria, VA 22313-1450

By hand: U. S. Patent and Trademark Office
Customer Service Window, Mail Stop Petitions
Randolph Building
401 Dulany Street
Alexandria, VA 22314

The centralized facsimile number is (571) 273-8300.

Telephone inquiries should be directed to the undersigned at 571-272-6735.

/Diane C. Goodwyn/
Diane C. Goodwyn
Petitions Examiner
Office of Petitions

UNITED STATES PATENT AND TRADEMARK OFFICE

Commissioner for Patents
United States Patent and Trademark Office
P.O. Box 1450
Alexandria, VA 22313-1450
www.uspto.gov

LAW OFFICE OF VAN R. IRION, PLLC
9040 EXECUTIVE PARK DRIVE, SUITE 223
KNOXVILLE TN 37923

MAILED

MAY 27 2010

OFFICE OF PETITIONS

In re Patent No. 6,787,324
Issue Date: September 7, 2004
Application No. 09/764,826
Filed: January 17, 2001
Attorney Docket No. UNPI-EDP-1007

ON PETITION

This is a decision on the renewed petition under 37 CFR 1.378(c), filed May 14, 2010, to accept the unintentionally delayed payment of a maintenance fee for the above-identified patent.

The petition is **GRANTED**.

This patent expired on September 7, 2008, for failure to pay the three and one-half year maintenance fee. Since this petition was submitted within twenty-four months after the six-month grace period provided in 37 CFR 1.362(e), the petition was timely filed under the provisions of 37 CFR 1.378(c).

The maintenance fee is hereby accepted and the above-identified patent is reinstated as of the mail date of this decision.

Telephone inquiries concerning this decision should be directed to the undersigned at (571) 272-6735.

The patent file is being referred to Files Repository.

/DCG/
Diane C. Goodwyn
Petitions Examiner
Office of Petitions

UNITED STATES PATENT AND TRADEMARK OFFICE

COMMISSIONER FOR PATENT
UNITED STATES PATENT AND TRADEMARK OFFIC
WASHINGTON, D.C. 20231
www.uspto.go

HUMAN GENOME SCIENCES INC
9410 KEY WEST AVENUE
ROCKVILLE MD 20850

COPY MAILED

NOV 2 5 2002

OFFICE OF PETITIONS

Applicant: Rosen et al.
Appl. No.: 09/764,861
Filing Date: January 17, 2001
Title: NUCLEIC ACIDS, PROTEINS, AND ANTIBODIES
Attorney Docket No.: PTZ04
Pub. No.: US 2002/0086811 A1
Pub. Date: July 4, 2002

This is a decision on the request for corrected patent application publication under 37 CFR 1.221(b), filed on September 3, 2002, supplemented with a copy of the filing receipt received via facsimile transmission on November 22, 2002, for the above-identified application.

The request is granted.

The corrected patent application publication will be published in due course.

The application is being forwarded to the Office of PreGrant Publication (PG-PUB) in Crystal Park 3-905 for further processing.

Inquires concerning this communication should be directed to Mark Polutta at (703) 308-8122 (voice) or (703) 746-3465 (facsimile).

Mark O. Polutta
Office of Patent Legal Administration
Office of the Deputy Commissioner
for Patent Examination Policy

4
#8

OIPE JC111
DEC 14 2001
PATENT & TRADEMARK OFFICE

IN THE UNITED STATES PATENT AND TRADEMARK OFFICE

In re application of: ROSEN et al.

Application Serial No.: 09/764,872 Group Art Unit: 1614

Filed: January 17, 2001 Examiner: Not assigned

For: Nucleic Acids, Proteins and Antibodies Attorney Docket No.: PA125

RESPONSE AND PETITION TO NOTICE OF OMITTED ITEM(S) IN A NONPROVISIONAL APPLICATION

RECEIVED
DEC 3 1 2001
OFFICE OF PETITIONS

Commissioner For Patents
Washington, D.C. 20231

09764872 .121401

Sir:

In response to the Notice of Omitted Item(s) In A Nonprovisional Application dated October 15, 2001, submitted herewith is a copy of page 448, as well as a copy of the postcard date-stamped January 17, 2001 by the Patent and Trademark Office, confirming that 555 pages of the specification were received. Likewise enclosed is a copy of the Notice of Omitted Item(s) in a Nonprovisional Application. Applicants believe that page 448 was part of the application as originally filed and therefore request a refund of the $130.00 petition fee.

The Commissioner is hereby authorized to charge the required petition fee of $130.00, and any other fees deemed necessary, to Deposit Account No. 08-3425.

Respectfully submitted,

Dated: December 14, 2001

Kenley K. Hoover (Reg. No. 40,302)
Attorney for Applicants

Human Genome Sciences, Inc.
9410 Key West Avenue
Rockville, Maryland 20850
301-610-5771 (telephone)

Adjustment date: 03/22/2002 AKELLEY
12/18/2001 AGDITOM 00000027 083425 09764872
01 FC:122 130.00 CR

KKH/rmr

03CO

PTO/SB/17 (10-01)
Approved for use through 10/31/2002. OMB 0651-0032
Patent and Trademark Office: U.S. DEPARTMENT OF COMMERCE

Under the Paperwork Reduction Act of 1995, no persons are required to respond to a collection of information unless it displays a valid OMB control number.

FEE TRANSMITTAL for FY 2002

Patent fees are subject to annual revision.

OIPE JC177 DEC 14 2001 PATENT & TRADEMARK OFFICE

Total amount of payment **$130.00**

Complete if Known	
Application Number	09/764,872
Filing Date	January 17, 2001
First Named Inventor	ROSEN et al.
Examiner Name	Not assigned
Group Art Unit	1614
Attorney Docket Number	PA125

METHOD OF PAYMENT

1. ☒ The Commissioner is hereby authorized to charge indicated fees and credit any overpayments to:

Deposit Account Number **08-3425**

Deposit Account Name **Human Genome Sciences, Inc.**

☒ Charge Any Additional Fee Required Under 37 CFR §§ 1.16 and 1.17

☐ Applicant claims small entity status. See 37 CFR 1.27

2. ☐ **Payment Enclosed:**
☐ Check ☐ Credit Card ☐ Money Order ☐ Other*

FEE CALCULATION

1. BASIC FILING FEE

Large Entity Fee Code	Large Entity Fee ($)	Small Entity Fee Code	Small Entity Fee ($)	Fee Description	Fee Paid
101	740	201	370	Utility filing fee	
106	330	206	165	Design filing fee	
107	510	207	255	Plant filing fee	
108	740	208	370	Reissue filing fee	
114	160	214	80	Provisional filing fee	
				SUBTOTAL (1)	**$0.00**

2. EXTRA CLAIM FEES

			Extra Claims	Fee from below	Fee Paid
Total Claims		-20**		$18.00	
Independent Claims		-3**		$84.00	
Multiple Dependent				$280.00	

Large Entity Fee Code	Large Entity Fee ($)	Small Entity Fee Code	Small Entity Fee ($)	
103	18	203	9	Claims in excess of 20
102	84	202	42	Independent claims in excess of 3
104	280	204	140	Multiple dependent claim, if not paid
108	84	209	42	** Reissue independent claims over original patent
110	18	210	9	** Reissue claims in excess of 20 and over original patent

SUBTOTAL (2) **$0.00**

** *or number previously paid, if greater; For Reissues, see above*

FEE CALCULATION (continued)

3. ADDITIONAL FEES

Large Entity Fee Code	Large Entity Fee ($)	Small Entity Fee Code	Small Entity Fee ($)	Fee Description	Fee Paid
105	130	205	65	Surcharge - late filing fee or oath	
127	50	227	25	Surcharge - late provisional filing fee or cover sheet	
139	130	139	130	Non-English specification	
147	2,520	147	2,520	For filing a request for *ex parte* reexamination	
112	920*	112	920*	Requesting publication of SIR prior to Examiner action	
113	1,840*	113	1,840*	Requesting publication of SIR after Examiner action	
115	110	215	55	Extension for reply within first month	
116	400	216	200	Extension for reply within second month	
117	920	217	460	Extension for reply within third month	
118	1,440	218	720	Extension for reply within fourth month	
128	1,960	228	980	Extension for reply within fifth month	
119	320	219	160	Notice of appeal	
120	320	220	160	Filing a brief in support of an appeal	
121	280	221	140	Request for oral hearing	
138	1,510	138	1,510	Petition to institute a public use hearing	
140	110	240	55	Petition to revive - unavoidable	
141	1,280	241	640	Petition to revive - unintentional	
142	1,280	242	640	Utility issue fee (or reissue)	
143	460	243	230	Design issue fee	
144	620	244	310	Plant issue fee	
122	130	122	130	Petitions to the Commissioner	130.00
123	50	123	50	Processing fee under 37 CFR 1.17(q)	
126	180	126	180	Submission of Information Disclosure Statement	
581	40	581	40	Recording each patent assignment per property (times number of properties)	
146	740	246	370	Filing a submission after final rejection (37 CFR § 1.129(a))	
149	740	249	370	For each additional invention to be examined (37 CFR § 1.129(b))	
179	740	279	370	Request for Continued Examination (RCE)	
169	900	169	900	Request for expedited examination of a design application	
145	100	145	100	Certificate of correction	
148	110	248	55	Statutory disclaimer	
561	3	561	3	Printed copy of patent, regular service	
Other fee (specify):					
Other fee (specify):					
				SUBTOTAL (3)	**$130.00**

* Reduced by Basic Filing Fee Paid

Complete *(if applicable)*

Submitted By

Name *(Print/Type)* Kenley K. Hoover	Registration No.: 40,302	Telephone	(301) 610-5771
Signature:		Date: December 14, 2001	

WARNING: Information on this form may become public. Credit card information should not be included on this form. Provide credit card information and authorization on PTO-2038.

Burden Hour Statement: This form is estimated to take 0.2 hours to complete. Time will vary depending upon the needs of the individual case. Any comments on the amount of time you are required to complete this form should be sent to the Chief Information Officer, Patent and Trademark Office, Washington, DC 20231. DO NOT SEND FEES OR COMPLETED FORMS TO THIS ADDRESS. SEND TO: Commissioner for Patents, Washington, DC 20231.

UNITED STATES PATENT AND TRADEMARK OFFICE

COMMISSIONER FOR PATENTS
UNITED STATES PATENT AND TRADEMARK OFFICE
WASHINGTON, D.C. 20231
www.uspto.gov

APPLICATION NUMBER	FILING/RECEIPT DATE	FIRST NAMED APPLICANT	ATTORNEY DOCKET NUMBER
09/764,872	01/17/2001	Craig A. Rosen	PA125

CONFIRMATION NO. 6983

FORMALITIES LETTER

OC000000006900979

22195
HUMAN GENOME SCIENCES INC
9410 KEY WEST AVENUE
ROCKVILLE, MD 20850

OIPE JC177
DEC 14 2001
PATENT & TRADEMARK OFFICE

Date Mailed: 10/15/2001

NOTICE OF OMITTED ITEM(S) IN A NONPROVISIONAL APPLICATION

FILED UNDER 37 CFR 1.53(b)

A filing date has been accorded to the above-identified nonprovisional application papers; however, the following item(s) appear to have been omitted from the application:

- Page(s) **Page 448** of the specification (description and claims).

I. Should applicant contend that the above-noted omitted item(s) was in fact deposited in the U.S. Patent and Trademark Office (USPTO) with the nonprovisional application papers, a copy of this Notice and a petition (and $130.00 petition fee *(37 CFR 1.17(h))*) with evidence of such deposit **must** be filed within **TWO MONTHS** of the date of this Notice. The petition fee will be refunded if is determined that the item(s) was received by the USPTO.

II. Should applicant desire to supply the omitted item(s) and accept the date that such omitted item(s) was filed in the USPTO as the filing date of the above-identified application, a copy of this Notice, the omitted item(s) (with a supplemental oath or declaration in compliance with 37 CFR 1.63 and 1.64 referring to such items), and a petition under 37 CFR 1.182 (with the $130.00 petition fee *(37 CFR 1.17(h))* requesting the later filing date **must** be filed within **TWO MONTHS** of the date of this Notice.

III. The failure to file a petition (and petition fee) under the above options (I) or (II) within **TWO MONTHS** of the date of this Notice (37 CFR 1.181(f)) will be treated as a constructive acceptance by the applicant of the application as deposited in the USPTO. **THIS TWO MONTH PERIOD IS NOT EXTENDABLE UNDER 37 CFR 1.136(a) or (b)**. In the absence of a timely filed petition in reply to this Notice, the application will maintain a filing date as of the date of deposit of the application papers in the USPTO, and original application papers (*i.e.*, the original disclosure of the invention) will include only those application papers present in the USPTO on the date of deposit.

In the event that applicant elects not to take action pursuant to options (I) or (II) above (thereby constructively electing option (III)), amendment of the specification to renumber the pages consecutively and cancel incomplete sentences caused by any omitted page(s), and/or amendment of the specification to cancel all references to any omitted drawing(s), relabel the drawing figures to be numbered consecutively (if necessary), and correct the references in the specification to the drawing figures to correspond with any relabelled drawing figures, is required. Any drawing changes should be accompanied by a copy of the drawing figures showing the proposed changes in red ink. Such amendment and/or correction to the drawing figures, if necessary, should be by way of preliminary amendment submitted prior to the first Office action to avoid delays in the prosecution of the application.

A copy of this notice MUST be returned with the reply.

Customer Service Center
Initial Patent Examination Division (703) 308-1202
PART 2 - COPY TO BE RETURNED WITH RESPONSE

09764872.121401

UNITED STATES PATENT AND TRADEMARK OFFICE

COMMISSIONER FOR PATENTS
UNITED STATES PATENT AND TRADEMARK OFFICE
WASHINGTON, D.C. 20231
www.uspto.gov

HUMAN GENOME SCIENCES INC
9410 KEY WEST AVENUE
ROCKVILLE MD 20850

PROCESSED BY
PG PUB DIVISION

MAR 20 2003

Applicant: Rosen et al.
Appl. No.: 09/764,886
Filing Date: January 17, 2001
Title: NUCLEIC ACIDS, PROTEINS, AND ANTIBODIES
Attorney Docket No.: PTZ02
Pub. No.: US 2002/0086822 A1
Pub. Date: July 4, 2002

This is a decision on the request for corrected patent application publication under 37 CFR 1.221(b), filed via facsimile transmission on September 4, 2002 for the above-identified application.

The request is granted.

The corrected patent application publication will be published in due course.

The application is being forwarded to the Office of PreGrant Publication (PG-PUB) in Crystal Park 3-905 for further processing.

Inquires concerning this communication should be directed to Mark Polutta at (703) 308-8122 (voice) or (703) 746-3465 (facsimile).

Mark O. Polutta
Office of Patent Legal Administration
Office of the Deputy Commissioner
for Patent Examination Policy

UNITED STATES PATENT AND TRADEMARK OFFICE

COMMISSIONER FOR PATENTS
UNITED STATES PATENT AND TRADEMARK OFFICE
WASHINGTON, D.C. 20231
www.uspto.gov

Paper No. 6

JAQUELIN K. SPONG
16075 OVERLOOK DRIVE
LOS GATOS, CA 95030

COPY MAILED

MAR 1 0 2003

OFFICE OF PETITIONS

In re Application of
Rybnicek et al.
Application No. 09/764,919
Filed: January 17, 2001
Attorney Docket No. IMT-MAGMOTOR

ON PETITION

This is a decision on the petition under 37 C.F.R. § 1.137(b), filed November 21, 2002, to revive the above-identified application.

The petition is **granted.**

The above-identified application became abandoned for failure to reply in a timely manner to the Notice to File Missing Parts of Application (Notice) mailed April 27, 2001. The Notice set a period for reply of two (2) months from the mail date of the Notice. No extensions of time under the provisions of 37 CFR 1.136(a) were obtained. Accordingly, the above-identified application became abandoned on June 28, 2001.

Petitioner has met the requirements to revive the above-identified application pursuant to 37 CFR 1.137(b).

The file is now being forwarded to the Office of Initial Patent Examination.

Telephone inquiries should be directed to Petitions Attorney Steven Brantley at (703) 306-5683.

Charles Steven Brantley
Petitions Attorney
Office of Petitions

7

Docket No.: IMT-MagMotor

ASSIGNMENT

(For Execution Prior To Filing Patent Application)

PATENT

In consideration of good and valuable consideration, the receipt of which is hereby acknowledged, the undersigned, John Wesley Stocker,

hereby sell, assign, and transfer to Applied Magnetics Corporation dba Innovative Micro Technology, a corporation of Delaware having a principal place of business at 75 Robin Hill Road, Goleta, CA, ("Assignee"), and its successors, assigns, and legal representatives, the entire right, title, and interest for the United States and all foreign countries, in and to any and all improvements that are disclosed in the application for the United States patent that has been executed by the undersigned prior hereto or concurrently herewith on the dates indicated below and is entitled

LOW INERTIA LATCHING MICROACTUATOR

and in and to said application and all divisional applications, continuation applications, continued prosecution applications, continuation-in-part applications, substitute applications, renewal applications, reissue applications, reexaminations, extensions, and all other patent applications that have been or shall be filed in the United States and all foreign countries on any of said improvements; and in and to all original patents, reissued patents, reexamination certificates, and extensions, that have been or shall be issued in the United States and all foreign countries on said improvements; and in and to all rights of priority resulting from the filing of said United States application;

agree that said Assignee may apply for and receive a patent or patents for said improvements in its own name; and that, when requested, without charge to, but at the expense of, said Assignee, its successors, assigns, and legal representatives, to carry out in good faith the intent and purpose of this Assignment, the undersigned will execute all divisional applications, continuation applications, continued prosecution applications, continuation-in-part applications, substitute applications, renewal applications, reissue applications, reexaminations, extensions and all other patent applications on any and all said improvements; execute all rightful oaths, assignments, powers of attorney, and other papers; communicate to said Assignee, its successors, assigns, and representatives all facts known to the undersigned relating to said improvements and the history thereof; and generally assist said Assignee, its successors, assigns, or representatives in securing and maintaining proper patent protection for said improvements and for vesting title to said improvements, and all applications for patents and all patents on said improvements, in said Assignee, its successors, assigns, and legal representatives; and

covenant with said Assignee, its successors, assigns, and legal representatives that no assignment, grant, mortgage, license, or other agreement affecting the rights and property herein conveyed has been made to others by the undersigned, and that full right to convey the same as herein expressed is possessed by the undersigned.

RECEIVED
NOV 2 2 2002
OFFICE OF PETITIONS

Each Inventor: Please Sign <u>and Date</u> Below:

Nov 5, 2002	[signature]	11/05/02, 20___	
Date	Name:	Date	
_____, 20____	_____	_____, 20____	
Date	Name:	Date	
_____, 20____	_____	_____, 20____	
Date	Name:	Date	
_____, 20____	_____	_____, 20____	
Date	Name:	Date	
_____, 20____	_____	_____, 20____	
Date	Name:	Date	
_____, 20____	_____	_____, 20____	
Date	Name:	Date	

<u>Assignment Document Return Address</u>:
Dr. John S. Foster
Innovative Micro Technology
75 Robin Hill Road
Goleta, CA
93117

UNITED STATES PATENT AND TRADEMARK OFFICE

COMMISSIONER FOR PATENTS
UNITED STATES PATENT AND TRADEMARK OFFICE
WASHINGTON, D.C. 20231
www.uspto.gov

Paper No. 4

LEE & HAYES PLLC
SUITE 500
421 W RIVERSIDE AVENUE
SPOKANE, WA 99201

COPY MAILED

NOV 2 0 2001

OFFICE OF PETITIONS

In re Application of	:	
Murli D. Satagopan et al	:	DECISION GRANTING
Application No. 09/764,956	:	PETITION
Filed: January 17, 2001	:	
Attorney Docket No. MS1-678US	:	

This is a decision on the paper styled "Request For Correction Of Filing Receipt" filed on October 5, 2001, which is being treated as a petition under 1.10(c), requesting that the above-identified application be accorded a filing date of Janaury 17, 2001, rather than the presently accorded filing date of Janaury 18, 2001.

Petitioners allege that the application was deposited in "Express Mail" service with the U.S. Postal Service, on Janaury 17, 2001. In support, petitioners provided a copy of the Express Mail label, receipt no. EL685270815US, showing a Date-In of January 17, 2001. The same Express Mail number appears on the original transmittal letter submitted with the present application. Petitioners request that the application be accorded a filing date of Janaury 17, 2001.

The Office considers the date the paper or fee is shown to have been deposited as "Express Mail" to be the "Date In" on the Express Mail label, MPEP 513. That is the date that verifies that the package was actually mailed. In view of the above, the evidence is convincing that the application was deposited as "Express Mail" with the US Postal Service on Janaury 17, 2001.

The petition is granted. A copy of the corrected Filing Receipt is enclosed.

The application is being returned to Technology Center AU 2154 for examination in due course.

Telephone inquires specific to this matter should be directed to Wan Laymon at (703) 306-5685.

Sherry Brinkley
Petitions Examiner
Office of Petitions
Office of the Deputy Commissioner
for Patent Examination Policy

Enclosure: Corrected Filing Receipt

UNITED STATES PATENT AND TRADEMARK OFFICE

COMMISSIONER FOR PATENTS
UNITED STATES PATENT AND TRADEMARK OFFICE
P.O. BOX 1450
ALEXANDRIA, VA 22313-1450
WWW.USPTO.GOV

Paper No. 9

AGILENT TECHNOLOGIES
Legal Department, 51U-PD
Intellectual Property Administration
P.O. Box 58043
Santa Clara CA 95052-8043

COPY MAILED

MAY 19 2003

OFFICE OF PETITIONS

In re Application of
Holcombe
Application No. 09/764,972
Filed: January 18, 2001
Attorney Docket No. 10004174-1
FOR: METHOD FOR CONSTRUCTING A FLEX-RIGID LAMINATE PROBE

DECISION DISMISSING PETITION

This is a decision on the petition under 37 CFR 1.137(a), filed April 28, 2003 (certificate of mailing date April 21, 2003), to revive the above-identified application.

The petition under 37 CFR 1.137(a) is **DISMISSED**.

Any further petition to revive the above-identified application must be submitted within TWO (2) MONTHS from the mail date of this decision. Extensions of time under 37 CFR 1.136(a) are permitted. The reconsideration request should include a cover letter entitled "Petition under 37 CFR 1.137." This is **not** final agency action within the meaning of 5 U.S.C. § 704.

The above-identified application became abandoned for failure to timely reply to the Restriction Requirement, mailed August 27, 2002, which set an extendable period for reply of one (1) month. Having obtained no extensions of time under 37 CFR 1.136(a), this application became abandoned on September 28, 2002 for failing to reply. A Notice of Abandonment was mailed on March 12, 2003.

The application file does not indicate a change of address has been filed in this case, although the address given on the petition differs from the address of record. A change of address should be filed in this case in accordance with MPEP 601.03. A courtesy copy of this decision is being mailed to the address noted on the petition. However, until otherwise instructed, all future correspondence regarding this application will be mailed solely to the address of record.

A grantable petition to revive an abandoned application under 37 CFR 1.137(a) must be accompanied by (1) the required reply, unless previously filed. In a nonprovisional application

abandoned for failure to prosecute, the required reply may be met by the filing of a continuing application. In an application or patent, abandoned or lapsed for failure to pay the issue fee or any portion thereof, the required reply must be the payment of the issue fee or any outstanding balance thereof; (2) the petition fee as set forth in § 1.17(l); (3) a showing to the satisfaction of the Commissioner that the entire delay in filing the required reply from the due date for the reply until the filing of a grantable petition pursuant to this paragraph was unavoidable; and (4) any terminal disclaimer (and fee as set forth in § 1.20 (d)) required pursuant to paragraph (c) of this section. This petition does not satisfy requirement (3).

With respect to (3), the showing of record is inadequate to establish unavoidable delay within the meaning of 37 CFR 1.137(a). Specifically, an application is "unavoidably" abandoned only where petitioner, or counsel for petitioner, takes all action necessary for a proper response to the outstanding Office action, but through the intervention of unforeseen circumstances, such as failure of mail, telegraph, telefacsimile, or the negligence of otherwise reliable employees, the response is not timely received in the Office. Ex parte Pratt, 1887 Dec. Comm'r Pat. 31 (Comm'r Pat. 1887).

The Commissioner may revive an abandoned application if the delay in responding to the relevant outstanding Office requirement is shown to the satisfaction of the Commissioner to have been "unavoidable". 35 USC § 133. Decisions on reviving abandoned applications have adopted the reasonably prudent person standard in determining if the delay was unavoidable. Ex parte Pratt, 1887 Dec. Comm'r Pat. 31, 32-33 (Comm'r Pat. 1887)(the term 'unavoidable' "is applicable to ordinary human affairs, and requires no more or greater care or diligence than is generally used and observed by prudent and careful men in relation to their most important business"); In re Mattullath, 38 App. D.C. 497, 514-15 (D.C. Cir. 1912); Ex parte Henrich, 1913 Dec. Comm'r Pat. 139, 141 (Comm'r Pat. 1913). In addition, decisions on revival are made on a "case-by-case basis, taking all the facts and circumstances into account." Smith v. Mossinghoff, 671 F.2d 533, 538, 213 USPQ 977, 982 (D.C. Cir. 1982). Finally, a petition to revive an application as unavoidably abandoned cannot be granted where a petitioner has failed to meet his or her burden of establishing the cause of the unavoidable delay. Haines v. Quigg, 673 F. Supp. 314, 5 USPQ2d 1130 (N.D. Ind. 1987).

Petitioner states that "the reply to the Restriction Requirement was overlooked due to the Divisional being filed. This was an administrative error."

Administrative error may be a basis for finding unavoidable delay, however petitioner has not provided adequate support to prove administrative error.

Petitioner has not explained how in-coming correspondence from the Office is processed, by whom it is processed, how due dates are docketed, and by whom they are docketed. Petitioner must supply information regarding the training provided to the personnel responsible for the docketing, degree of supervision of their work, and checks on the described work which were used to assure proper execution of assigned tasks. The persons who would have processed the correspondence at issue and

docketed due dates must provide statements.

If petitioner is alleging that the delay was caused by a misinterpretation of patent rules or simple forgetfulness, then delay was not unavoidable. A delay resulting from the lack of knowledge or improper application of the patent statute, rules of practice or the MPEP does not constitute an "unavoidable" delay. See Haines v. Quigg, 673 F. Supp. 314, 317, 5 USPQ2d 1130, 1132 (N.D. Ind. 1987), Vincent v. Mossinghoff, 230 USPQ 621, 624 (D.D.C. 1985); Smith v. Diamond, 209 USPQ 1091 (D.D.C. 1981); Potter v. Dann, 201 USPQ 574 (D.D.C. 1978); Ex parte Murray, 1891 Dec. Comm'r Pat. 130, 131 (1891). Preoccupation with other matters which took precedence over the above-identified application does not constitute unavoidable delay. See Smith v. Mossinghoff, 671 F.2d 533, 538, 213 USPQ 977, 982 (D.C. Cir. 1982).

ALTERNATIVE VENUE

Petitioner should consider filing a petition stating that the delay was unintentional. Public Law 97-247, § 3, 96 Stat. 317 (1982), which revised patent and trademark fees, amended 35 U.S.C. § 41(a)(7) to provide for the revival of an "unintentionally" abandoned application without a showing that the delay in prosecution or in late payment of an issue fee was "unavoidable." This amendment to 35 U.S.C. § 41(a)(7) has been implemented in 37 CFR 1.137(b).

The filing of a petition under 37 CFR 1.137(b) cannot be intentionally delayed and therefore must be filed promptly. A person seeking revival due to unintentional delay can not make a statement that the delay was unintentional unless the entire delay, including the delay from the date it was discovered that the application was abandoned until the filing of the petition to revive under 37 CFR 1.137(b), was unintentional. A statement that the delay was unintentional is not appropriate if petitioner intentionally delayed the filing of a petition for revival under 37 CFR 1.137(b).

Further correspondence with respect to this matter should be addressed as follows:

By mail: Mail Stop PETITION
Commissioner for Patents
Post Office Box 1450
Alexandria, VA 22313-1450

By facsimile: (703) 308-6916
Attn: Office of Petitions

By hand: Office of Petitions
2201 South Clark Place
Crystal Plaza 4, Suite 3C23
Arlington, VA 22202

Telephone inquiries concerning this decision should be directed to the undersigned at (703) 308-6712.

E. Shirene Willis

E. Shirene Willis
Senior Petitions Attorney
Office of Petitions

Enclosures: blank PTO/SB/64-- PETITION FOR REVIVAL OF AN APPLICATION ABANDONED UNINTENTIONALLY UNDER 37 CFR 1.137(b)

Privacy Act Statement

cc: REGAN L. TRUMPER
AGILENT TECHNOLOGIES, INC.
815 SW 14TH STREET
LOVELAND CO 80537

UNITED STATES PATENT AND TRADEMARK OFFICE

COMMISSIONER FOR P
UNITED STATES PATENT AND TRADEMARK
P.O. Box
ALEXANDRIA, VA 22313
www.us

Paper No. 12

AGILENT TECHNOLOGIES
Legal Department, 51U-PD
Intellectual Property Administration
P.O. Box 58043
Santa Clara CA 95052-8043

COPY MAILED

JUN 23 2003

OFFICE OF PETITIONS

In re Application of
Holcombe
Application No. 09/764,972
Filed: January 18, 2001
Attorney Docket No. 10004174-1
FOR: METHOD FOR CONSTRUCTING A FLEX-RIGID LAMINATE PROBE

DECISION GRANTING PETITION

This is a decision on the petition under 37 CFR 1.137(b), filed June 2, 2003 (certificate of mailing date May 27, 2003), to revive the above-identified application.

The application file does not indicate a change of address has been filed in this case, although the address given on the petition differs from the address of record. A change of address should be filed in this case in accordance with MPEP 601.03. A courtesy copy of this decision is being mailed to the address noted on the petition.

The above-identified application became abandoned for failure to timely reply to the Restriction Requirement, mailed August 27, 2002, which set an extendable period for reply of one (1) month. Having obtained no extensions of time under 37 CFR 1.136(a), this application became abandoned on September 28, 2002 for failing to reply. A Notice of Abandonment was mailed on March 12, 2003. A petition to revive under 37 CFR 1.137(a), filed April 28, 2003 (certificate of mailing date April 21, 2003), was dismissed on May 19, 2003 for failure to show the entire delay in reply to the August 27, 2002 Restriction Requirement was unavoidable.

Applicant has submitted a reply in the form of an amendment, an acceptable statement of the unintentional nature of the delay in responding to the August 27, 2002 Restriction Requirement, and the petition fee.

The petition under 37 CFR 1.137(b) is **GRANTED**.

After the mailing of this decision the application will be forwarded to Technology Center 2800's technical support staff for entry of the amendment filed April 28, 2003 (certificate of mailing date April 21, 2003) and resubmitted June 2, 2003 (certificate of mailing date May 27, 2003).

Telephone inquiries concerning this decision should be directed to the undersigned at (703) 308-6712.

E. Shirene Willis
Senior Petitions Attorney
Office of Petitions

cc: REGAN L. TRUMPER
AGILENT TECHNOLOGIES, INC.
815 SW 14TH STREET
LOVELAND CO 80537

UNITED STATES PATENT AND TRADEMARK OFFICE

Commissioner for Patents
United States Patent and Trademark Office
P.O. Box 1450
Alexandria, VA 22313-1450
www.uspto.gov

JJGJr: 09-05

Paper No: __

COPY MAILED

SEP 12 2005

OFFICE OF PETITIONS

PATTON BOGGS LLP
2550 M STREET, N. W.
WASHINGTON DC 20037

In re Application of	:	
Denson, et al.	:	
Application No. 09/765,039	:	DECISION ON PETITION
Filed: 19 January, 2001	:	
Attorney Docket No.: 12913.101	:	

This is a decision on the petition filed on 21 July, 2001, under 37 C.F.R. §1.47(a), but was received into the Office of Petitions only as of this writing.

The petition is **GRANTED**.

BACKGROUND AND ANALYSIS

The record reflects that:

- the instant application was filed on 19 January, 2001, absent, *inter alia*, a fully executed oath/declaration;
- on 2 March, 2001, the Office mailed a Notice of Missing Parts, indicating therein, *inter alia*, a two-month period for reply absent extension of time;
- on 2 July, Petitioner Laurence E. Stein (Reg. No. 35,371) filed an oath/declaration, and on 21 July, 2001, Petitioner further replied with an oath/declaration signed by co-inventor Curiel (on behalf of himself and), but without the signature of non-signing inventors

Janice D. Denson (Ms. Denson), Bernard J. Lidestri (Mr. Lidestri), Gregory D. Manoni (Mr. Manoni), Jerry Ahart (Mr. Ahart), Michael J. Caughey (Mr. Caughey) and Tamara O. Petroff (Ms. Petroff), and with a statement by Petitioner as to the process of sending the entire application (description, claims, abstract and drawings) for review, with the oath/declaration for signature, and supported said statement with a copy of the transmittal letter.

Lastly, Petitioner has submitted a declaration in compliance with 37 C.F.R. §1.63 and §1.64 and Petitioner has shown that such action is necessary to prevent irreparable damage.

This application and papers have been reviewed and found in compliance with 37 C.F.R. §1.47(a).

This application hereby is **ACCORDED status under 37 C.F.R. §1.47(a)**.

As provided under 37 C.F.R. §1.47(a), the Office will forward notice of this application's filing to the non-signing inventor at the address given in the petition.

Notice of the filing of this application also will be published in the Official Gazette.

This file is released to OIPE for processing as necessary to reflect the instant decision before being released for examination in due course.

Telephone inquiries concerning this decision may be directed to the undersigned at (571) 272-3214.

John J. Gillon, Jr.
Senior Attorney
Office of Petitions

UNITED STATES PATENT AND TRADEMARK OFFICE

COMMISSIONER FOR PATENTS
UNITED STATES PATENT AND TRADEMARK OFFICE
P.O. BOX 1450
ALEXANDRIA, VA 22313-1450
WWW.USPTO.GOV

Paper No. 5

FUESS & DAVIDENAS
17258 AMARILLO RD
RAMONA CA 92065

COPY MAILED

JUL 1 4 2003

OFFICE OF PETITIONS

In re Application of
Tony Yaksh
Application No. 09/765,063
Filed: January 17, 2001
Attorney Docket No. SD98-024

DECISION ON PETITION

This is a decision on the petition filed July 1, 2003, pursuant to 37 CFR 1.137(b), to revive the above-identified application.

The petition is **GRANTED**.

The above-identified application became abandoned for failure to timely reply to the Notice to File Missing Parts of Nonprovisional Application, mailed February 28, 2001. This Notice set a period for reply of two months from the mail date of the Notice to submit an executed oath or declaration (and surcharge for its late filing), together with the statutory filing fee. No extensions of time under the provisions of 37 CFR 1.136(a) were obtained. No reply having been received, the above-identified application became abandoned on April 29, 2001. A Notice of Abandonment was mailed on August 26, 2001.

With the instant petition, petitioner paid the statutory filing fee and submitted an executed declaration (with surcharge for its late filing), paid the petition fee, and made the proper statement of unintentional delay.

As petitioner previously paid the petition fee on May 30, 2003, the $650 petition fee submitted with the petition on July 1, 2003 will be refunded to petitioner under separate cover.

The application file is being forwarded to the Office of Initial Patent Examination for pre-examination processing.

Telephone inquiries related to this decision should be directed to the undersigned at (703) 305-0272.

Cliff Congo
Petitions Attorney
Office of Petitions

UNITED STATES PATENT AND TRADEMARK OFFICE

COMMISSIONER FOR PATENTS
UNITED STATES PATENT AND TRADEMARK OFFICE
WASHINGTON, D.C. 20231
www.uspto.gov

Paper No. 8

PILLSBURY WINTHROP LLP
EAST TOWER, NINTH FLOOR
1100 NEW YORK AVENUE, N.W.
WASHINGTON, DC 20005-3918

COPY MAILED
FEB 7 2002
OFFICE OF PETITIONS

COPY MAILED
CANCELLED
FEB 8 2002
OFFICE OF PETITIONS

In re Application of
Rajiv Anand et al.
Application No. 09/765,079
Filed: January 17, 2001
For: INTELLIGENT ALERTS

: DECISION NOTING JOINDER OF
: INVENTOR AND PETITION UNDER
: 37 CFR 1.47(a) MOOT

This is in response to the petition under 37 CFR 1.47(a), filed October 5, 2001. Papers filed on October 5, 2001 and January 29, 2002, included a Declaration signed by previously nonsigning inventor Rajiv Anand in compliance with 37 CFR 1.63.

In view of the joinder of the inventor, further consideration under 37 CFR 1.47(a) is moot; this application does not have any rule 1.47(a) status and no such status should appear on the file wrapper. This application need not be returned to this office for any further consideration under 37 CFR 1.47(a).

This application is being forwarded to the Initial Patent Examination Unit.

Inquiries related to this decision may be addressed to Irvin Dingle at (703) 306-5684.

Frances Hicks

Frances Hicks
Lead Petitions Examiner
Office of Petitions
Office of the Deputy Commissioner
for Patent Examination Policy

UNITED STATES PATENT AND TRADEMARK OFFICE

COMMISSIONER FOR PATENTS
UNITED STATES PATENT AND TRADEMARK OFFICE
P.O. BOX 1450
ALEXANDRIA, VA 22313-1450
www.uspto.gov

Paper No.

GENERAL INSTRUMENT
CORPORATION DBA THE CONNECTED
HOME SOLUTIONS BUSINESS OF
MOTOROLA, INC.
101 TOURNAMENT DRIVE
HORSHAM, PA 19044

COPY MAILED
MAY 15 2006
OFFICE OF PETITIONS

In re Application of	:	
Alexander Medvinsky	:	DECISION ON
Application No. 09/765,108	:	PETITION
Filed: January 16, 2001	:	
Attorney Docket No. D2538	:	

This is a decision on the PETITION FOR REVIVAL OF AN APPLICATION FOR PATENT ABANDONED UNINTENTIONALLY UNDER 37 CFR 1.137(b), filed February 17, 2006.

The petition is **GRANTED**.

The above-identified application was abandoned for failure to timely file a proper reply to the final Office action mailed April 22, 2005. This Office action set a shortened statutory period for reply of three (3) months from the mail date of the action. An amendment, made timely by an accompanying petition and extension of time for response within the first month, was filed on July 29, 2005. However, the reply was determined by the examiner to not place the application in condition for allowance (Advisory Action mailed August 23, 2005). No proper reply having been received and no further extension of time obtained the application became abandoned effective August 23, 2005. The instant petition precedes the mailing of a courtesy Notice of Abandonment.

On petition, petitioner submitted a Request for Continued Examination (RCE) and submission under §1.114 (in the form of a request to consider the arguments previously submitted July 29, 2005); paid the petition fee; and made the required statement of unintentional delay.

Technology Center AU 2136 has been advised of this decision. The application is, thereby, forwarded to the examiner for consideration of the RCE and submission submitted on petition filed February 17, 2006.

The petition also includes a fee of $900 for extension for response within the third month. The maximum period for extension for response to the Notice ended on October 22, 2005. Thereafter, no extension of time could be obtained. As no extension of time is obtainable, the fee for such extension is being refunded to Deposit Account NO. 50-2117, as authorized.

Telephone inquiries concerning this decision should be directed to the undersigned at (571) 272-3219.

Nancy Johnson
Senior Petitions Attorney
Office of Petitions

UNITED STATES PATENT AND TRADEMARK OFFICE

Commissioner for Patents
United States Patent and Trademark Office
P.O. Box 1450
Alexandria, VA 22313-1450
www.uspto.gov

STANDLEY LAW GROUP LLP
495 METRO PLACE SOUTH
SUITE 210
DUBLIN OH 43017

COPY MAILED
APR 04 2007
OFFICE OF PETITIONS

In re Application of	:	
Karl Lang	:	
Application No.: 09/765112	:	ON PETITION
Filing or 371(c) Date: 01/18/2001	:	
Attorney Docket Number: MTI1877-141	:	

This is a decision on the Petition for Revival of an Application for Patent Abandoned Unintentionally Under 37 C.F.R. § 1.137(b), filed December 22, 2006.

This Petition is hereby **granted**.

Background

The above-identified application became abandoned for failure to timely reply to the non-final office action, mailed February 23, 2006. The Office action set a three (3) period for reply. Extensions of time under 37 CFR 1.136(a) were available. No reply having been received, the application became abandoned on May 24, 2006. A Notice of Abandonment was mailed September 27, 2006.

Applicant files the instant petition and Amendment in response to the Office action. Accordingly, the petition is granted.

This application is being referred to Technology Center Art Unit 1743 for processing of the Amendment filed with the petition in due course.

Telephone inquiries concerning this decision should be directed to the undersigned at (571) 272-3232.

Derek L. Woods
Attorney
Office of Petitions

UNITED STATES PATENT AND TRADEMARK OFFICE

COMMISSIONER FOR PATENTS
UNITED STATES PATENT AND TRADEMARK OFFICE
P.O. BOX 1450
ALEXANDRIA, VA 22313-1450
www.uspto.gov

Paper No. 10

THOMAS W. HANSON, LLC
3990 S. CHEROKEE ST.
ENGLEWOOD, CO 80110

COPY MAILED
MAR 0 9 2004
OFFICE OF PETITIONS

In re Application of	:	
Richard Naimish	:	DECISION ON PETITION
Application No. 09/765,174	:	
Filed: January 18, 2001	:	
Attorney Docket No. Roh-N	:	

This is a decision on the "PETITION UNDER 37 CFR 137(A) FOR REVIVAL OF AN ABANDONED APPLICATION WHERE THE DELAY WAS UNAVOIDABLE," filed March 1, 2004.

The petition is **DISMISSED**.

Any request for reconsideration must be submitted within **TWO (2) MONTHS** from the mail date of this decision. Extensions of time under 37 C.F.R. § 1.136(a) are permitted. The reconsideration request should include a cover letter entitled "Renewed Petition under 37 C.F.R. § 1.137(a)" or "Renewed Petition under 37 C.F.R. § 1.137(b)," as appropriate.

The above-identified application became abandoned for failure to file a timely and proper reply to the non-final Office action mailed November 20, 2002. This Office action set a three-month shortened statutory period for reply, with extensions of time obtainable under § 1.136(a) or (b). No reply having been received, the above-identified application became abandoned on February 21, 2003. A Notice of Abandonment was mailed on December 17, 2003.

In response, petitioner filed the instant petition. Therein, petitioner submitted evidence to show that a response was timely deposited into the Express Mail service of the United States Postal Service on February 13, 2003. However, petitioner acknowledges that the Express mail number was not, as required for a showing of timely deposit under § 1.10, entered on the original transmittal, but rather was affixed to the file copy.

Decisions on reviving abandoned applications on the basis of "unavoidable" delay have adopted the reasonably prudent person standard in determining if the delay was unavoidable:

> The word unavoidable' . . . is applicable to ordinary human affairs, and requires no more or greater care or diligence

> than is generally used and observed by prudent and careful men in relation to their most important business. It permits them in the exercise of this care to rely upon the ordinary and trustworthy agencies of mail and telegraph, worthy and reliable employees, and such other means and instrumentalities as are usually employed in such important business. If unexpectedly, or through the unforeseen fault or imperfection of these agencies and instrumentalities, there occurs a failure, it may properly be said to be unavoidable, all other conditions of promptness in its rectification being present.

In re Mattullath , 38 App. D.C. 497, 514-15 (1912)(quoting Pratt, 1887 Dec. Comm'r Pat. 31, 32-33 (1887)); see also Winkler v. Ladd, 221 F. Supp. 550, 552, 138 USPQ 666, 667-68 (D.D.C. 1963), aff 'd, 143 USPQ 172 (D.C. Cir. 1963); Ex parte Henrich, 1913 Dec. Comm'r Pat. 139, 141 (1913). In addition, decisions on revival are made on a "case-by-case basis, taking all the facts and circumstances into account." Smith v. Mossinghoff, 671 F.2d 533, 538, 213 USPQ 977, 982 (D.C. Cir. 1982). Finally, a petition cannot be granted where a petitioner has failed to meet his or her burden of establishing that the delay was "unavoidable." Haines v. Quigg, 673 F. Supp. 314, 316-17, 5 USPQ2d 1130, 1131-32 (N.D. Ind. 1987).

As a "reasonably prudent person" would file papers or fees in compliance with 37 CFR 1.8 or 1.10 to ensure their timely filing in the USPTO, as well as preserve adequate evidence of such filing, a delay caused by an applicant's failure to file papers or fees in compliance with 37 CFR 1.8 and 1.10 does not constitute "unavoidable" delay. See Krahn v. Commissioner, 15 USPQ2d 1823, 1825 (E.D. Va. 1990). Here, petitioner has some evidence that a paper, including a $126 fee, was deposited in the USPS on February 13, 2003. In fact, the $126 fee is, of record, in the application with a mailroom date of February 13, 2003. However, given that the Express Mail number was not placed on the amendment, petitioner does not have adequate evidence of the timely filing of the amendment in compliance with § 1.10. Moreover, the Office considers the filing of correspondence under 37 CFR 1.10 without the number of the "Express Mail" mailing label thereon an oversight that can be avoided by the exercise of reasonable care, requests for waiver of this requirement will not be granted on petition. Absent persuasive evidence that the amendment was filed in compliance with § 1.10, the delay in replying is not found "unavoidable" within the meaning of § 1.137(a).

Petitioner is not precluded from seeking revival of this application under 37 CFR 1.137(b)[1].

---

[1] A grantable petition under § 1.137(b) must be accompanied by: (1) the reply required to the outstanding Office action or notice, unless previously filed; (2) the petition fee set forth in 37 C.F.R. § 1.17(m); (3) a statement that the entire delay in filing the required reply from the due date for the reply until the filing of a grantable petition pursuant to this paragraph was unintentional; and (4) any terminal disclaimer (and fee as set forth in § 1.20(d)) required pursuant to § 1.137(d).

Further correspondence with respect to this matter should be addressed as follows:

By mail: Mail Stop Petition
Commissioner for Patents
P.O. Box 1450
Alexandria, VA 22313-1450

By FAX: (703) 872-9306
ATTN: NANCY JOHNSON
SENIOR PETITIONS ATTORNEY

By hand: CUSTOMER SERVICE WINDOW
2011 South Clark Place
Crystal Plaza Two Lobby
Arlington, VA 22202

Telephone inquiries related to this decision may be directed to the undersigned at (703) 305-0309.

Nancy Johnson

Nancy Johnson
Senior Petitions Attorney
Office of Petitions

UNITED STATES PATENT AND TRADEMARK OFFICE

Commissioner for Patents
United States Patent and Trademark Office
P.O. Box 1450
Alexandria, VA 22313-1450
www.uspto.gov

Paper No. 13

THOMAS W. HANSON, LLC
3990 S. CHEROKEE ST.
ENGLEWOOD, CO 80110

COPY MAILED

MAY 2 1 2004

OFFICE OF PETITIONS

In re Application of :
Richard Naimish :
Application No. 09/765,174 :
Filed: January 18, 2001 :
Attorney Docket No. Roh-N :

DECISION ON PETITION

This is a decision on the "PETITION TO WITHDRAW HOLDING OF ABANDONMENT" filed March 29, 2004.

It is noted that this petition follows the filing of a PETITION UNDER 37 CFR 137(A) FOR REVIVAL OF AN ABANDONED APPLICATION WHERE THE DELAY WAS UNAVOIDABLE," filed March 1, 2004, and a decision mailed March 9, 2004 dismissing that petition. Further, this petition relies on substantially the same arguments and evidence presented on petition under § 1.137(a).

The petition is **DENIED**.

The above-identified application became abandoned for failure to file a timely and proper reply to the non-final Office action mailed November 20, 2002. This Office action set a three-month shortened statutory period for reply, with extensions of time obtainable under § 1.136(a) or (b). No reply having been received, the above-identified application became abandoned on February 21, 2003. A Notice of Abandonment was mailed on December 17, 2003.

The prior petition under § 1.137(a) was dismissed on the basis that petitioner had not shown that an amendment was filed in compliance with 37 CFR 1.10, and that the failure to do so and to preserve evidence of having done so is not "unavoidable" within the meaning of § 1.137(a). See Krahn v. Commissioner, 15 USPQ2d 1823, 1825 (E.D. Va. 1990). In fact, petitioner indicated that the paper was not filed in compliance with § 1.10. 37 CFR 1.10(b) provides that the paper(s) or fee(s) that constitute the correspondence should also include the "Express Mail" mailing label number thereon. Specifically, petitioner stated that "The Express Mail number was not entered on the original Transmittal, but was affixed to the file copy in accordance with internal procedures." (Petitioner thereby admitted that the transmittal submitted on petition showing the Express Mail mailing number is not a true copy of the transmittal as filed with the Office).

On instant petition, petitioner has made the same arguments except he has deleted the admission that the transmittal did not bear the Express Mail mailing number. In addition, he has

included a copy of an informal communication from Tamara McClure of the USPTO, with a Revenue Accounting and Management report, acknowledging that a fee of $126 was received in the Office with a mail room date of February 13, 2003; and a copy of the amendment. Petitioner maintains that the evidence now shows that the response was both submitted to and received by the USPTO prior to the due date for the response.

For the reasons set forth in the decision dismissing the petition under § 1.137(a) mailed March 9, 2004, petitioner's evidence is unpersuasive that the amendment was timely filed in compliance with § 1.10. The amendment does not include the Express Mail mailing label number. Given petitioner's admissions, the copy of transmittal submitted cannot be relied on as a true copy of any original transmittal submitted. Thus, it is not persuasive evidence of timely filing under § 1.8 or § 1.10. See § 1.8(a)(1)(i)(A) and § 1.8(b). (It is further noted that the petition does not include a statement which attests on a personal knowledge basis of the previous timely mailing by Express Mail).

As previously stated, receipt of a paper including the $126 fee does not establish receipt of any amendment applicant intended to file with the fee. Further, petitioner has not submitted a itemized date-stamped return postcard receipt showing that the amendment was among the papers deposited on February 13, 2003. In view thereof, the petition must be denied.

Further correspondence with respect to this matter should be addressed as follows:

By mail: Mail Stop Petition
Commissioner for Patents
P.O. Box 1450
Alexandria, VA 22313-1450

By FAX: (703) 872-9306
ATTN: NANCY JOHNSON
SENIOR PETITIONS ATTORNEY

By hand: CUSTOMER SERVICE WINDOW[1]
2011 South Clark Place
Crystal Plaza Two Lobby
Arlington, VA 22202

---

[1] Effective June 5, 2004, patent correspondence delivered by hand or delivery services, other than the USPS, to the Customer Window must be addressed as follows:

U.S. Patent and Trademark Office
220 20th Street S.
Customer Window, Mail Stop _____
Crystal Plaza Two, Lobby, Room 1B03
Arlington, VA 22202

Telephone inquiries related to this decision may be directed to the undersigned at (703) 305-0309.

Nancy Johnson
Senior Petitions Attorney
Office of Petitions

UNITED STATES PATENT AND TRADEMARK OFFICE

Commissioner for Patents
United States Patent and Trademark Office
P.O. Box 1450
Alexandria, VA 22313-1450
www.uspto.gov

Paper No. 15

THOMAS W. HANSON, LLC
3990 S. CHEROKEE ST.
ENGLEWOOD, CO 80110

COPY MAILED

JUN 2 4 2004

OFFICE OF PETITIONS

In re Application of	:	
Richard Naimish	:	DECISION ON PETITION
Application No. 09/765,174	:	
Filed: January 18, 2001	:	
Attorney Docket No. Roh-N	:	

This is a decision on the "REQUEST TO RECONSIDER DENIAL OF PETITION TO WITHDRAW HOLDING OF ABANDONMENT," filed June 15, 2004.

The petition is **GRANTED**.

The above-identified application became abandoned for failure to file a timely and proper reply to the non-final Office action mailed November 20, 2002. This Office action set a three-month shortened statutory period for reply, with extensions of time obtainable under § 1.136(a) or (b). No reply having been received, the above-identified application became abandoned on February 21, 2003. A Notice of Abandonment was mailed on December 17, 2003.

An initial petition under § 1.137(a) was filed on March 1, 2004. By decision mailed March 9, 2004, the petition was dismissed. A petition to withdraw holding of abandonment was filed on March 29, 2004. By decision mailed May 21, 2004, the petition was denied. Petitioner failed to establish by virtue of compliance with 37 C.F.R. § 1.8 or § 1.10, or by virtue of *prima facie* evidence in the form of an itemized and date-stamped postcard that the amendment was timely filed. The requirements of § 1.10 were at issue because on petition under § 1.137(a), applicant proffered an "Express Mail Post Office to Addressee" label (and other evidence relative to a showing under § 1.10) to establish timely filing. However, petitioner did not meet the requirements of § 1.10[1]. The issue was further confused by petitioner

[1] § 1.10 (e) Any person mailing correspondence addressed as set out in § 1.1(a) to the Office with sufficient postage utilizing the "Express Mail Post Office to Addressee" service of the USPS but not received by the Office, may petition the Commissioner to consider such correspondence filed in the

submitting a copy of the amendment, which admittedly unlike the original met the requirements of § 1.10. Specifically, it included the Express Mail mailing label number. It was then unclear as to what other extent the copy was unlike the original.

37 C.F.R. § 1.8 and postcard evidence were at issue because those are the other means by which an applicant can establish timely filing. However, petitioner also did not meet the requirements of § 1.8(b)[2] to show that the amendment should be considered

---

Office on the USPS deposit date, provided that:

(1) The petition is filed promptly after the person becomes aware that the Office has no evidence of receipt of the correspondence;

(2) The number of the "Express Mail" mailing label was placed on the paper(s) or fee(s) that constitute the correspondence prior to the original mailing by "Express Mail";

(3) The petition includes a copy of the originally deposited paper(s) or fee(s) that constitute the correspondence showing the number of the "Express Mail" mailing label thereon, a copy of any returned postcard receipt, a copy of the "Express Mail" mailing label showing the "date-in," a copy of any other official notation by the USPS relied upon to show the date of deposit, and, if the requested filing date is a date other than the "date-in" on the "Express Mail" mailing label or other official notation entered by the USPS, a showing pursuant to paragraph (d)(3) of this section that the requested filing date was the date the correspondence was deposited in the "Express Mail Post Office to Addressee" service prior to the last scheduled pickup for that day; and

(4) The petition includes a statement which establishes, to the satisfaction of the Commissioner, the original deposit of the correspondence and that the copies of the correspondence, the copy of the "Express Mail" mailing label, the copy of any returned postcard receipt, and any official notation entered by the USPS are true copies of the originally mailed correspondence, original "Express Mail" mailing label, returned postcard receipt, and official notation entered by the USPS.

However, see also MPEP 513. 37 CFR 1.10(e) applies only in those situations in which the correspondence at issue was lost in toto (i.e., the entire correspondence was not delivered to the Office). Where there is a dispute as to the contents of correspondence submitted to the Office (e.g., an applicant asserts that three sheets of drawings were submitted under 37 CFR 1.10 with an application, but the Office records indicate receipt of only two sheets of drawings with the application), an applicant may not rely upon the provisions of 37 CFR 1.10(e) to establish what document(s) and/or fee(s) were filed in the Office with such correspondence. Rather, where the records of the Office (e.g., the file of the application) contain any document(s) or fee(s) corresponding to the contents of the correspondence at issue, the Office will rely upon its official record of the contents of such correspondence in absence of convincing evidence (e.g., a postcard receipt under MPEP § 503 containing specific itemization of the document(s) or fee(s) purported to have been filed with the correspondence at issue) that the Office received and misplaced any document(s) or fee(s) that is not among the official records of the Office.

[2] 37 CFR § 1.8 (b) In the event that correspondence is considered timely filed by being mailed or transmitted in accordance with paragraph (a) of this section, but not received in the Patent and Trademark Office, and the application is held to be abandoned or the proceeding is dismissed,

timely filed. Moreover, petitioner argued that the amendment was among the papers received in the Office on February 14, 2003, but did not provide an itemized and date-stamped return postcard receipt to establish that the amendment was among the items received in the Office on February 14, 2003. On these bases, the prior petitions were properly dismissed or denied. (Petitioner should have properly filed the initial petition under § 1.181 as a petition to withdraw the holding of abandonment on the basis that the amendment should be considered timely filed pursuant to § 1.8(b), and included the showing under § 1.8(b) on petition under § 1.181. The petition under § 1.137(a) could have been included as an alternative basis for relief if the petition under § 1.181 failed).

Nonetheless, on instant request for reconsideration, petitioner has provided additional clarification regarding the nature of the copy of response submitted. In addition, petitioner has submitted a statement attesting on a personal knowledge basis to the previous timely mailing of the response. Accordingly, it is concluded that the amendment should be considered timely filed pursuant to 37 C.F.R. § 1.8(b).

In view thereof, the holding of abandonment is hereby withdrawn.

The application is being forwarded to Technology Center 2837 for consideration of the amendment submitted on petition March 1, 2004 (Paper No. 9).

Telephone inquiries related to this decision may be directed to the undersigned at (703) 305-0309.

Nancy Johnson
Senior Petitions Attorney
Office of Petitions

---

terminated, or decided with prejudice, the correspondence will be considered timely if the party who forwarded such correspondence: (1) Informs the Office of the previous mailing or transmission of the correspondence promptly after becoming aware that the Office has no evidence of receipt of the correspondence; (2) Supplies an additional copy of the previously mailed or transmitted correspondence and certificate; and (3) Includes a statement which attests on a personal knowledge basis or to the satisfaction of the Commissioner to the previous timely mailing or transmission. If the correspondence was sent by facsimile transmission, a copy of the sending unit's report confirming transmission may be used to support this statement.

UNITED STATES PATENT AND TRADEMARK OFFICE

Commissioner for Patents
United States Patent and Trademark Office
P.O. Box 1450
Alexandria, VA 22313-1450
www.uspto.gov

NOV 19 2004

Paper No. 11172004

GENOMICS INSTITUTE OF THE
NOVARTIS RESEARCH FOUNDATION
10675 JOHN JAY HOPKINS DRIVE, SUITE E225
SAN DIEGO CA 92121-1127

In re Application of BROCK et al.	:	
Application No.: 09/765,207	:	**WITHDRAWAL FROM ISSUE**
Filed: January 17, 2001	:	*37 CFR 1.313*
Attorney Docket No. P0021US00	:	

The above-identified application is withdrawn from issue after payment of the issue fee due to unpatentability of one or more claims. See 37 C.F.R. ɜ 1.313(b)(3).

The above-identified application is hereby withdrawn from issue.

The issue fee is refundable upon request. If, however, the application is again found allowable, the issue fee can be applied toward payment of the issue fee in the amount identified on the new Notice of Allowance and Fee(s) Due upon written request. This request and any balance due must be received on or before the due date noted in the new Notice of Allowance and Fee(s) Due in order to prevent abandonment of the application.

Telephone inquiries should be directed Hezron Williams, Supervisory Patent Examiner, at (571) 272-2208.

The examiner will notify applicant of the new status of this application in an Office action to be issued promptly.

Howard N. Goldberg, Group Director
Technology Center 2800
Semiconductors, Electrical and Optical
Systems and Components

UNITED STATES PATENT AND TRADEMARK OFFICE

Commissioner for Patents
United States Patent and Trademark Office
P.O. Box 1450
Alexandria, VA 22313-1450
www.uspto.gov

KEVIN M .FARRELL, PIERCE ATWOOD
ONE NEW HAMPSHIRE AVENUE
SUITE 350
PORTSMOUTH, NH 03801

COPY MAILED

APR 0 6 2005

OFFICE OF PETITIONS

In re Application of :
Howard Milne Chandler :
Application No. 09/765,217 :
Filed: January 18, 2001 :
Attorney Docket No. 0141-2005 :

ON PETITION

This is a decision on the petition, filed March 31, 2005, which is being treated under 37 CFR 1.313(c)(2) to withdraw the above-identified application from issue after payment of the issue fee. This is also a decision on the petition, filed March 31, 2005, under 37 CFR 1.78(a)(3), requesting acceptance of an unintentionally delayed claim under 35 U.S.C. § 120 for the benefit of the prior-filed nonprovisional Application No. 08/944,858, filed October 6, 1997, as set forth in the amendment filed concurrently with the instant petition.

The petitions are **GRANTED**.

Discussion of Petition under 37 CFR 1.313(c))(2)

The above-identified application is withdrawn from issue for consideration of a submission under 37 CFR 1.114 (request for continued examination). See 37 CFR 1.313(c)(2).

Petitioner is advised that the issue fee paid on March 11, 2005 in the above-identified application cannot be refunded. If, however, the above-identified application is again allowed, petitioner may request that it be applied towards the issue fee required by the new Notice of Allowance.[1]

Discussion of Petition under 37 CFR 1.78(a)(3)

A petition for acceptance of a claim for late priority under 37 CFR 1.78(a)(3) is only applicable to

[1] The request to apply the issue fee to the new Notice may be satisfied by completing and returning the new Issue Fee Transmittal Form PTOL-85(b), which includes the following language thereon: "Commissioner for Patents is requested to apply the Issue Fee and Publication Fee (if any) or re-apply any previously paid issue fee to the application identified above." Petitioner is advised that, whether a fee is indicated as being due or not, the Issue Fee Transmittal Form **must** be completed and timely submitted to avoid abandonment. Note the language in bold text on the first page of the Notice of Allowance and Fee(s) Due (PTOL-85).

those applications filed on or after November 29, 2000. Further, the petition is appropriate only after the expiration of the period specified in 37 CFR 1.78(a)(2)(ii). In addition, the petition under 37 CFR 1.78(a)(3) must be accompanied by:

(1) the reference required by 35 U.S.C. § 120 and 37 CFR 1.78(a)(2)(i) of the prior-filed application, unless previously submitted;
(2) the surcharge set forth in § 1.17(t); and
(3) a statement that the entire delay between the date the claim was due under 37 CFR 1.78(a)(2)(ii) and the date the claim was filed was unintentional. The Commissioner may require additional information where there is a question whether the delay was unintentional.

The instant pending application was filed on January 18, 2001, and was pending at the time of filing of the instant petition. A reference to the prior-filed nonprovisional application has been included in an amendment to the first sentence of the specification following the title, as required by 37 CFR 1.78(a)(2)(iii).

The instant nonprovisional application was filed after November 29, 2000, and the claim herein for the benefit of priority to the prior-filed nonprovisional application is submitted after expiration of the period specified in 37 CFR 1.78(a)(2)(ii). Also, the reference to the prior-filed nonprovisional application was submitted during the pendency of the instant nonprovisional application, for which the claim for benefit of priority is sought. *See* 35 U.S.C. § 120. Accordingly, having found that the instant petition for acceptance of an unintentionally delayed claim for the benefit of priority under 35 U.S.C. § 120 to the prior-filed nonprovisional application satisfies the conditions of 37 CFR 1.78(a)(3), the petition is granted.

The granting of the petition to accept the delayed benefit claim to the prior-filed application under 37 CFR 1.78(a)(3) should not be construed as meaning that the instant application is entitled to the benefit of the prior-filed application. In order for the instant application to be entitled to the benefit of the prior-filed application, all other requirements under 35 U.S.C. § 120 and 37 CFR 1.78(a)(1) and (a)(2) must be met. Similarly, the fact that the corrected Filing Receipt accompanying this decision on petition includes the prior-filed application should not be construed as meaning that applicants are entitled to the claim for benefit of priority to the prior-filed application noted thereon. Accordingly, the examiner will, in due course, consider this benefit claim and determine whether the instant application is entitled to the benefit of the earlier filing date.

A corrected Filing Receipt, which includes the priority claim to the prior-filed nonprovisional application, accompanies this decision on petition.

After this decision is mailed, deposit account No. 50-0282 will be charged a total of $1,895.00 – $130 for the petition to withdraw from issue, $1,370.00 for an unintentionally delayed claim for priority and $395 for the RCE.

Any inquiries concerning this decision may be directed to Wan Laymon at (571) 272-3220.

This matter is being referred to Technology Center Art Unit 1641 for appropriate action on the amendment filed March 31, 2005, including consideration by the examiner of applicants' entitlement to claim benefit of priority under 35 U.S.C. § 120 to the prior-filed nonprovisional application.

Frances Hicks

Frances Hicks
Lead Petitions Examiner
Office of Petitions
Office of the Deputy Commissioner
for Patent Examination Policy

ATTACHMENT: Corrected Filing Receipt

UNITED STATES PATENT AND TRADEMARK OFFICE

COMMISSIONER FOR PATENTS
UNITED STATES PATENT AND TRADEMARK OFFICE
WASHINGTON, D.C. 20231
www.uspto.gov

Mailed

MAY 2 5 2001

Technology Center 2100

Paper No. 3

Anthony R. Barkume
Greenberg Traurig
200 Park Avenue
Met Life Building
New York, New York 10166-3104

In re Application of: David Gould et al.	)	
Application No.: 09/765,244	)	**DECISION ON REQUEST FOR**
Filed: January 18, 2001	)	**WITHDRAWAL AS ATTORNEY**
For: PREPAID CASH EQUIVALENT	)	
CARD AND SYSTEM	)	

This is a decision on the Request To Withdraw from Representation filed February 12, 2001.

A grantable request to withdraw as attorney of record should indicate thereon the present mailing addresses of the attorney(s) who is/are withdrawing from the record and of the applicant. The request for withdrawal must be signed by every attorney seeking to withdraw or contain a clear indication that one attorney is signing on behalf of another/others. A request to withdraw will not be approved unless at least 30 (thirty) days would remain between the date of approval and the later of the expiration date of a time to file a response or the expiration date of the maximum time period which can be extended under 37 C.F.R. § 1. 136(a). The effective date of withdrawal being the date of decision and not the date of request. See M.P.E.P. § 402.06. 37 C.F.R. § 1.36 further requires that the applicant or patent owner be notified of the withdrawal of the attorney or agent.

The request meets all the criteria listed above. Accordingly the request is **GRANTED**.

All future communications from the Office will be directed to the below-listed address until otherwise notified by applicant. This correspondence address is provided by the withdrawn attorney(s). Applicant is reminded of the obligation to promptly notify the Patent and Trademark Office (Office) of any change in correspondence address to ensure receipt of all communications from the Office.

Pinchus M. Laufer

Pinchus M. Laufer
Special Programs Examiner
Technology Center 2100
Computer Architecture, Software, and Electronic Commerce
(703) 306-4160

cc: David Gould
122 East 42nd Street
Suite 1733
New York, New York 10168

UNITED STATES
PATENT AND
TRADEMARK OFFICE

UNDER SECRETARY F C MMERCE F R INTELLECTUAL PR PERTY
AND DIRECTOR OF THE UNITED STATES PATENT AND TRADEMARK OFFICE
WASHINGTON, D.C. 20231
WWW.USPTO.GOV

#7

MAR 1 3 2003

HUMAN GENOME SCIENCES INC
9410 KEY WEST AVENUE
ROCKVILLE MD 20850

In re Application of	:
Gil H. Choi et al	:
Serial No.: 09/765,271	: WITHDRAWAL OF ABANDONMENT
Filed: January 22, 2001	:
Attorney Docket No.: PB340P2C3	:

This is in response to the petition under 37 CFR 1.181, filed January 28, 2003, requesting withdrawal of the holding of abandonment of the above identified application.

A review of the file history shows that the Office mailed a first Office action to applicants on June 7, 2002, setting a one month shortened statutory period for reply. Applicants replied on October 7, 2002 (facsimile transmission date) and the reply was received by the Office as evidenced by an Office return fax transmission. The reply, consisting of a request for a three month extension of time and fee therefor, has not been located. The examiner mailed a Notice of Abandonment to applicants on January 9, 2003, indicating no reply had been received. The copy of the reply which accompanied the petition will be used in lieu of the original reply. In view the timely reply the Notice of Abandonment mailed January 9, 2003, is considered to have been mailed in error and is hereby withdrawn.

Applicants' petition is **GRANTED**.

The application will be forwarded to the examiner for further consideration.

Should there be any questions with regard to this letter please contact William R. Dixon, Jr. by letter addressed to the Director, Technology Center 1600, Washington, DC 20231, or by telephone at (703) 308-3824 or by facsimile transmission at (703) 305-7230.

Jasemine C. Chambers
Director, Technology Center 1600

UNITED STATES PATENT AND TRADEMARK OFFICE

COMMISSIONER FOR PATENTS
UNITED STATES PATENT AND TRADEMARK OFFICE
P.O. BOX 1450
ALEXANDRIA, VA 22313-1450
www.uspto.gov

STAAS & HALSEY LLP
SUITE 700
1201 NEW YORK AVENUE, N.W.
WASHINGTON, DC 20005

COPY MAILED

AUG 3 1 2006

OFFICE OF PETITIONS

In re Application of	:	
Nagashima et al.	:	
Application No. 09/765,380	:	DECISION ON PETITION
Filed: January 22, 2001	:	UNDER 37 CFR 1.55(c)
Attorney Docket No. 1080.1045CIPD3	:	

This is a decision on the petition under 37 CFR 1.55(c), filed March 8, 2006, to accept an unintentionally delayed claim under 35 U.S.C. § 119(a)-(d) for benefit of priority to the filing date of foreign Japanese Application No. 9-171782, filed June 27, 1997.

The petition is **DISMISSED AS MOOT**.

The petition is accompanied by an oath or declaration (37 CFR 1.63(c)(2)) which includes a reference to the above-noted foreign application(s). In this instance, a reference was made on filing in the oath, to the above-noted foreign application application.

In view of the above, the $1370.00 petition fee submitted is unnecessary and will be refunded to petitioner's deposit account in due course.

Any questions concerning this decision on petition may be directed to Derek Woods at (571) 272-3232. All other inquiries concerning either the examination procedures or status of the application should be directed to the Technology Center.

This application is being referred to Technology Center AU 2191 for consideration by the examiner of applicant's entitlement to claim benefit of priority under 35 U.S.C. § 119(a)-(d) to the prior-filed application(s).

Frances Hicks
Lead Paralegal
Office of Petitions

UNITED STATES PATENT AND TRADEMARK OFFICE

Commissioner for Patents
United States Patent and Trademark Office
P.O. Box 1450
Alexandria, VA 22313-1450
www.uspto.gov

COPY MAILED

JUL 0 8 2005

OFFICE OF PETITIONS

SUGHRUE MION ZINN MACPEAK & SEAS LLP
2100 PENNSYLVANIA AVENUE NW
WASHINGTON, DC 20037-3213

In re Application of	:	
Taku Ishizawa et al	:	
Application No. 09/765,411	:	DECISION GRANTING PETITION
Filed: January 22, 2001	:	UNDER 37 CFR 1.313(c)(2)
Attorney Docket No. Q62798	:	

This is a decision on the petition, filed July 7, 2005, under 37 CFR 1.313(c)(2) to withdraw the above-identified application from issue after payment of the issue fee.

The petition is **GRANTED**.

The above-identified application is withdrawn from issue for consideration of a submission under 37 CFR 1.114 (request for continued examination). See 37 CFR 1.313(c)(2).

Petitioner is advised that the issue fee paid on June 21, 2005 in the above-identified application cannot be refunded. If, however, the above-identified application is again allowed, petitioner may request that it be applied towards the issue fee required by the new Notice of Allowance.[1]

Telephone inquiries should be directed to the undersigned at (571) 272-3218.

This matter is being referred to Technology Center AU 2861 for processing of the request for continued examination under 37 CFR 1.114 and for consideration of the Information Disclosure Statement.

Frances Hicks
Petitions Examiner
Office of Petitions

---

[1] *The request to apply the issue fee to the new Notice may be satisfied by completing and returning the new Issue Fee Transmittal Form PTOL-85(b), which includes the following language thereon: "Commissioner for Patents is requested to apply the Issue Fee and Publication Fee (if any) or re-apply any previously paid issue fee to the application identified above." Petitioner is advised that, whether a fee is indicated as being due or not, the Issue Fee Transmittal Form* ***must*** *be completed and timely submitted to avoid abandonment. Note the language in bold text on the first page of the Notice of Allowance and Fee(s) Due (PTOL-85).*

UNITED STATES PATENT AND TRADEMARK OFFICE

COMMISSIONER FOR PATENTS
UNITED STATES PATENT AND TRADEMARK OFFICE
P.O. BOX 1450
ALEXANDRIA, VA 22313-1450
www.uspto.gov

APR 14 2004

PATREA L. PABST
HOLLAND & KNIGHT LLP
SUITE 2000, ONE ATLANTIC CENTER
1201 WEST PEACHTREE STREET, N.E.
ATLANTA GA 30309-3400

In re Application of	:
Jack E. Arbiser	:
Serial No.: 09/765,491	: PETITION DECISION
Filed: January 18, 2001	:
Attorney Docket No.: EU 98055	:

This is in response to the petition under 37 CFR 1.144, filed February 4, 2004, requesting withdrawal of an improper restriction requirement.

BACKGROUND

A review of the file history shows that this application was filed under 35 U.S.C. 111 on January 18, 2001, as a Continuation of SN 09/345,712 and contained claims 4-6 and 10-17 as amended by preliminary amendment. In a first Office action, mailed July 27, 2001, the examiner set forth a restriction requirement dividing the claims into two groups, as follows:

Group I, claims 4-6, 10-12 and 17, drawn to a method of inhibiting skin disorders;
Group II, claims 13-16, drawn to a pharmaceutical composition containing a curcumin.

The examiner set forth appropriate reasoning for dividing the claims,

Applicant replied on September 4, 2001, electing group I with traverse arguing that the method of use and the composition should be examined together and would not be a burden on the examiner to do so.

The examiner mailed a new Office action to applicant on November 21, 2001, acknowledging applicants election of Group I and responded to the traversal, but maintained the requirement. The examiner also set forth rejections for obvious double patenting, for indefiniteness under 35 U.S.C. 112, second paragraph, for anticipation under 35 U.S.C. 102(b) over Aggarwal et al and Andrulis, Jr., et al, and for obviousness under 35 U.S.C. 103(a) over JP 10120558, Aggarwal et al, applicant's admissions and Pharmacotherapy.

Applicant replied on March 21, 2003, amending claims 4, 10 and 17, canceling claims 13-16 and adding claim 18. Each of the rejections were addressed appropriately.

The examiner mailed a new non-Final Office action to applicant on August 13, 2002. The examiner presented a new rejection under 35 U.S.C. 112, second paragraph, for indefiniteness, and a new rejection under 35 U.S.C. 103(a) over Sukhatme, Doland's Medical Dictionary, Galardy and O'Reilly. Claims 10-12 and 18 were indicated as allowable.

Applicant replied on November 13, 2002, and amended claims 4, 6 and 17 and added claim 19, and responded to the rejections of record.

On February 12, 2003, the examiner mailed a new non-Final Office action to applicant requiring an election of species in claims 4, 10 and 17, stating that they are directed to a number of species which are independent and distinct from each other. No rejections were made and no claims indicated allowable.

Applicant replied on March 12, 2003, electing a curcuminoid as the species to be examined and traversed the requirement and in addition filed a petition to the Director to withdraw the requirement arguing primarily that it was too late in the prosecution to make such a requirement.

The examiner in the next Office action, mailed November 4, 2003, held claims 4-6 and 17 withdrawn from consideration and examined claims 10-12 and 18-19. The examiner responded to the traversal by maintaining the requirement on the basis that a restriction requirement may be made at any time during the prosecution of an application. The petition was dismissed as premature by the examiner. Claims 10-12 and 18 were rejected under 35 U.S.C. 103(a) as unpatentable over Galardy, AlAlousi et al (sic Alousi) and Arbiser et al in view of Thaloor et al. Claims 10, 12 and 19 were rejected under 35 U.S.C. 103(a) as unpatentable over Arbiser et al in view of Thaloor et al

Applicants replied on February 4, 2004, by filing this petition and by filing a amendment on March 1, 2004. The amendment has not been considered by the examiner.

DISCUSSION

Applicant does not argue the initial restriction requirement between method and compositions and has acquiesced therein by canceling claims to the non-elected invention. Applicant, however, strenuously traverses the election of species requirement first set forth in the fourth Office action. Applicant argues that an election of species should be set forth in the first Office action. While this is not necessarily an absolute requirement, an election of species should be set forth as early as possible in the prosecution, not as here, after significant consideration on the merits has occurred.

Applicant also argues that the species on which the election of species is based have been in the claims with little change from filing and that at least two Office actions treated all of the species

on their merits. Since they were examined on their merits it would be improper to now divide them by requiring an election between them for examination purposes.

The examiner has argued in response to the above that a restriction requirement may be made at any time during prosecution. While this is not incorrect, an election of species requirement is not a true restriction requirement, but merely a tool an examiner can use in cooperation with an applicant to determine where a search and examination of an invention should begin. Restriction requires that the divided inventions be independent and distinct. Election of species requires only that they be independent of each other. They are not distinct in the usual sense since they are directed to the same category of invention (e.g. compounds, method of use of a compound, etc.). In view of the prosecution history of this application the examiner's election of species requirement was inappropriate since all species had, or should have, been considered and examined in the first Office action on the merits.

DECISION

The petition is **GRANTED.**

The application will be forwarded to the examiner for further consideration, including the amendment filed March 1, 2004, not inconsistent with this decision and withdrawal of the election of species requirement.

No fee is required for this petition and the petition fee paid of $130.00 will be credited to applicant's Deposit Account No. 50-1868, as directed.

Should there be any questions about this decision please contact William R. Dixon, Jr., by letter addressed to Director, TC 1600, at the address listed above, or by telephone at 571-272-0519 or by facsimile sent to the general Office facsimile number, 703-872-9306.

Josemia C. Chambers for

Bruce M. Kisliuk
Director, Technology Center 1600

SPE RESPONSE FOR CERTIFICATE OF CORRECTION

DATE : 4309 Paper No.: _____

TO SPE OF : ART UNIT 3763

SUBJECT : Request for Certificate of Correction for Appl. No.: 09/765498 Patent No.: 7018363

Please respond to this request for a certificate of correction within 7 days.

FOR IFW FILES: Should COC be approved

Please ~~review the~~ requested changes/corrections as shown in the **COCIN** document(s) in the IFW application image. No new matter should be introduced, nor should the scope or meaning of the claims be changed.

Please complete the response (see below) and forward the completed response to scanning using document code **COCX**.

FOR PAPER FILES:

Please review the requested changes/corrections as shown in the attached certificate of correction. Please complete this form (see below) and forward it with the file to:

Certificates of Correction Branch (CofC)
South Tower - 9A22
Palm Location 7580

E Young
Certificates of Correction Branch
703-308-9390 ext. 117

Thank You For Your Assistance

The request for issuing the above-identified correction(s) is hereby:
Note your decision on the appropriate box.

- ☐ **Approved** — **All** changes apply.
- ☐ **Approved in Part** — Specify below which changes **do not** apply.
- ☐ **Denied** — State the reasons for denial below.

Comments: _____

_____ **SPE** _____ **Art Unit**

UNITED STATES PATENT AND TRADEMARK OFFICE

COMMISSIONER FOR PATENTS
UNITED STATES PATENT AND TRADEMARK OFFICE
P.O. BOX 1450
ALEXANDRIA, VA 22313-1450
www.uspto.gov

Paper No. 14

MAIL

FEB 03 2004

DIRECTOR OFFICE
TECHNOLOGY CENTER 2600

SHERIDAN ROSS PC
1560 BROADWAY
SUITE 1200
DENVER CO 80202

In re Application of
Kober et al.
Application No. 09/765,553
Filed: January 18, 2001
For: RAKE ERCEIVER FOR SPREAD SPECTRUM SIGNAL DEMODULATION

DECISION ON REQUEST TO WITHDRAW FROM RECORD

This is a decision on the request to withdraw as attorney/agent of record filed on December 1, 2003.

A grantable request to withdraw as attorney/agent of record must:
(1) indicate the present mailing address of the attorney(s)/agent(s) who seek(s) to withdraw, and
(2) be signed by each attorney/agent seeking to withdraw or clearly be signed on their behalf, and
(3) be *approved* at least thirty (30) days prior to the maximum extendable period for response to any outstanding Office Action, and
(4) indicate the address to which future correspondence should be mailed.

Petitioner has satisfied the requirements for successfully requesting withdrawal of themselves as well as attorneys associated with customer number 22442. Accordingly, ***the request is granted.*** Future correspondence will be sent to the below listed address which has been provided by the withdrawing attorney(s).

Dwayne D. Bost
Special Program Examiner
Technology Center 2600
Communications
(703) 305-4778

cc: John Thomas, PhD
TensorComm, Inc.
1490 West 121st Avenue, Suite 105
Westminster, Colorado 80234

UNITED STATES PATENT AND TRADEMARK OFFICE

COMMISSIONER FOR PATENTS
UNITED STATES PATENT AND TRADEMARK OFFICE
P.O. BOX 1450
ALEXANDRIA, VA 22313-1450
www.uspto.gov

Jason E. Pauls
Foley & Lardner
Suite 3800
777 East Wisconsin Avenue
Milwaukee, WI 53202-5664

COPY MAILED

JUN 23 2005

OFFICE OF PETITIONS

In re Application of :
Keese : LETTER REGARDING PTA AND
Application No. 09/765,695 : CERTIFICATE OF CORRECTION
Filed: January 18, 2001 :
Atty. Dkt. No.: 1108334-0431 :

This letter is in response to the paper entitled "PATENT TERM ADJUSTMENT," filed March 3, 2005. The Office thanks patentees for their good faith and candor in bringing this to our attention.

The correct Patent Term Adjustment ("PTA") at the time of the issuance of the patent is 194 days.

The Office will adjust the PAIR screen to reflect that the Patent Term Adjustment (PTA) determination at the time of mailing of the Notice of Allowance and Issue Fee Due reflects an adjustment of 194 days. A copy of the updated PAIR screen showing the correct determination is enclosed.

Applicant indicates that an error appears in the calculation of PTA and suggests a PTA of 194 days, rather than 237 days, is appropriate.

A review of the application history reveals that the determination of patent term adjustment of 237 days is in error. An adjustment of 248 days in accordance with 37 CFR 1.702(a)(1) and 1.703(a)(1) can be attributed to the Office[1]. An additional adjustment of 17 days under 37 CFR 1.702(a)(2) and 1.703(a)(2) can be attributed to the Office[2].

---

[1] The adjustment began March 19, 2002, the day after the date that is fourteen months after the date on which the application was filed, and ended November 21, 2002, the date of mailing of non-final Office action.

[2] The adjustment began January 17, 2004, the day after the date that is four months after the date a reply under § 1.111 was filed, and ended February 2, 2004, the date of mailing of non-final Office action.

The adjustment totaling 265 days is reduced 28 days for applicant delay in accordance with 37 CFR 1.704(b)[3]. The adjustment is further reduced for applicant delay, as indicated by applicant, 43 days in accordance with 37 CFR 1.704(b)[4].

Hence, the patent term adjustment of 265 days appearing on the determination of patent term adjustment is in error as indicated by applicant.

As applicant is advising us of an error in providing too much patent term adjustment in this application, no fee is due in connection to this matter.

This application is being forwarded to the Publications Division for processing into a patent.

Telephone inquiries specific to this matter should be directed to Petitions Attorney Alesia M. Brown at (703) 305-0310.

Kery A. Fries
for

Karin Ferriter
Senior Legal Advisor
Office of Patent Legal Administration
Office of Deputy Commissioner
for Patent Examination Policy

Enclosure: Enclosure: Copy of Adjustment PAIR Calculation

---

[3] The reduction began February 22, 2003, the day after the date that is three months after the date of mailing of non-final Office action, and ended March 21, 2003, the date a response was filed.

[4] The reduction began May 3, 2004, the day after the date that is three months after the date of mailing of non-final Office action, and ended June 14, 2004, the date a response was submitted.

UNITED STATES
PATENT AND
TRADEMARK OFFICE

JUN 13 2002

UNDER SECRETARY OF COMMERCE FOR INTELLECTUAL PROPERTY
AND DIRECTOR OF THE UNITED STATES PATENT AND TRADEMARK OFFICE
WASHINGTON, D.C. 20231
WWW.USPTO.GOV

CAMPBELL & FLORES LLP
4370 LA JOLLA VILLAGE DRIVE
7TH FLOOR
SAN DIEGO CA 92122

#14

In re Application of	:
Daniel S. Sem	:
Serial No.: 09/765,696	: PETITION TO MAKE SPECIAL
Filed: January 19, 2001	:
Attorney Docket No.: P-TB 4567	:

This is in response to applicants' petition filed March 5, 2002, to make the above-identified application special under the provisions of 37 CFR 1.102(d). The petition is a copy of one filed September 21, 2001, which petition has not been correlated withthe file. The petitoin fee was submitted with the original petition.

Applicant has satisfied the provisions set forth in M.P.E.P. 708.02, XII. Therefor the petition is **GRANTED**.

The application will be forwarded to the examiner for action on the merits commensurate with this decision.

The request for an interview should be directed to the assigned examiner.

Should there be any questions with regard to this letter please contact William R. Dixon, Jr. by letter addressed to the Director, Technology Center 1600, Washington, DC 20231, or by telephone at (703) 308-3824 or by facsimile transmission at (703) 305-7230

William R. Dixon, Jr.
Special Program Examiner
Technology Center 1600

UNITED STATES PATENT AND TRADEMARK OFFICE

UNITED STATES DEPARTMENT OF COMMERCE
United States Patent and Trademark Office
Address: COMMISSIONER FOR PATENTS
P.O. Box 1450
Alexandria, Virginia 22313-1450
www.uspto.gov

NIXON PEABODY LLP - PATENT GROUP
1100 CLINTON SQUARE
ROCHESTER, NY 14604

Mail Date: 04/21/2010

Applicant	: Randy K. Young	: DECISION ON REQUEST FOR
Patent Number	: 7580488	: RECALCULATION of PATENT
Issue Date	: 08/25/2009	: TERM ADJUSTMENT IN VIEW
Appliction No	: 09/765,712	: OF WYETH AND NOTICE OF INTENT TO
Filed	: 01/19/2001	: ISSUE CERTIFICATE OF CORRECTION
		:

The Request for Recalculation is **GRANTED** to the extent indicated.

The patent term adjustment has been determined to be **1557** days. The USPTO will *sua sponte* issue a certificate of correction reflecting the amount of PTA days determined by the recalculation.

Prior to the issuance of the certificate of correction, the USPTO will afford patentee an opportunity to be heard and request reconsideration. Accordingly, patentee has **one month or thirty (30) days**, whichever is longer, to file a request for reconsideration of this patent term adjustment calculation. See 35 U.S.C. 154(b)(3)(B)(ii) and 37 CFR 1.322(a)(4). No extensions of time will be granted under 37 CFR 1.136.

Patentee should use document code PET.OP if electronically filing a request for reconsideration of this patent term adjustment calculation. The patentee must also include the information required by 37 CFR 1.705(b)(2) and the fee required by 37 CFR 1.18(e). If patentee does not file a timely request for reconsideration of this patent term adjustment calculation including the information required by 37 CFR 1.705(b)(2) and the fee required by 37 CFR 1.18(e), the USPTO will issue a certificate of correction reflecting the PTA determination noted above.

Patentee should be aware that in order to preserve the right to review in the United States District Court for the District of Columbia of the USPTO patent term adjustment determination, patentee must ensure that he or she also take the steps required under 35 U.S.C. 154(b)(4)(A) in a timely manner. Nothing in the request for recalculation should be construed as providing an alternative time frame for commencing a civil action under 35 U.S.C. 154(b)(4)(A).

Any questions concerning this decision should be directed to the Office of Patent Legal Administration at 571-272-7702.

UNITED STATES PATENT AND TRADEMARK OFFICE

COMMISSIONER FOR PATENTS
UNITED STATES PATENT AND TRADEMARK OFFICE
P.O. BOX 1450
ALEXANDRIA, VA 22313-1450
www.uspto.gov

PEPPER HAMILTON LLP
ONE MELLON CENTER, 50TH FLOOR
500 GRANT STREET
PITTSBURGH, PA 15219

COPY MAILED
MAY 31 2006
OFFICE OF PETITIONS

In re Application of	:	
Timothy Robinson	:	
Application No. 09/765,789	:	
Filed: January 19, 2001	:	ON PETITION
Attorney Docket Number:	:	
129510.00001	:	

This is a decision on the Petition, filed May 14, 2001, and re-filed and supplemented on April 28, 2006, requesting the application be accorded a filing date of January 19, 2001, including 4 sheets of drawing Figures described in the specification.

The petition is **dismissed**.

The application was filed on January 19, 2001. However, on March 14, 2001, the Office of Initial Patent Examination mailed a Notice of Omitted Item(s) in a Nonprovisional Application (hereinafter "Notice") stating that the application had been accorded a filing date; however, Figure 4 described in the specification appeared to have been omitted from the application.

Applicant responds with the instant petition wherein Applicant avers that 4 sheets of drawings, Figures 1-4, were originally filed with the application on January 19, 2001, and were received by this Office as evidenced by the return-receipt postcard. In support of this assertion, Applicant provides a copy of his return-receipt postcard, acknowledging receipt of, *inter alia*, 4 Figures, 4 sheets of informal drawings in the above-identified application by this Office on January 19, 2001[1].

[1] A review of the original petition papers filed on May 14, 2001 reveal that neither a copy of the return-receipt postcard, nor a copy of the missing drawing sheet/Figure, were filed at that time; however, Applicant has included the copy of the postcard (but not the drawing) with the re-filed petition.

"A postcard receipt which itemizes and properly identifies the papers which are being filed serves as prima facie evidence of receipt in the PTO of all items listed thereon by the PTO." MPEP § 503.

However, Applicant a review of the petition papers filed reveals that Applicant has failed to file a copy of the missing drawing Figure/sheet.

Accordingly, the petition is dismissed.

Applicant should file a request for reconsideration of the petition and include a copy of the missing Figure/sheet.

Telephone inquiries concerning this matter should be directed to the undersigned at (571) 272-3232.

Derek L. Woods
Attorney
Office of Petitions

UNITED STATES PATENT AND TRADEMARK OFFICE

COMMISSIONER FOR PATENTS
UNITED STATES PATENT AND TRADEMARK OFFICE
P.O. BOX 1450
ALEXANDRIA, VA 22313-1450
www.uspto.gov

PEPPER HAMILTON LLP
ONE MELLON CENTER, 50TH FLOOR
500 GRANT STREET
PITTSBURGH, PA 15219

COPY MAILED
JUN 0 8 2006
OFFICE OF PETITIONS

In re Application of	:	
Timothy Robinson	:	
Application No. 09/765,789	:	
Filed: January 19, 2001	:	ON PETITION
Attorney Docket Number:	:	
129510.00001	:	

This is a decision on the Petition, filed May 14, 2001; re-filed and supplemented on April 14, 2006, and again re-filed and supplemented with drawing Figure 4 on April 28, 2006, requesting the application be accorded a filing date of January 19, 2001, including 4 sheets of drawing Figures described in the specification. The petition is properly treated under 37 CFR 1.182. Applicant also requests re-publication of the application to include Figure 4. The request is properly treated under 37 CFR 1.221.

The petition is **granted-in-part**.

The application was filed on January 19, 2001. However, on March 14, 2001, the Office of Initial Patent Examination mailed a Notice of Omitted Item(s) in a Nonprovisional Application (hereinafter "Notice") stating that the application had been accorded a filing date; however, Figure 4 described in the specification appeared to have been omitted from the application.

Applicant responds with the instant petitions wherein Applicant avers that 4 sheets of drawings, Figures 1-4, were originally filed with the application on January 19, 2001, and were received by this Office as evidenced by the return-receipt postcard. In support of this assertion, Applicant provides a copy of his return-receipt postcard, acknowledging receipt of, *inter alia*, 4 Figures,

4 sheets of informal drawings in the above-identified application by this Office on January 19, 2001[1].

"A postcard receipt which itemizes and properly identifies the papers which are being filed serves as prima facie evidence of receipt in the PTO of all items listed thereon by the PTO." MPEP § 503.

The petition is **granted** to the extent that the copy of Figures 4 supplied with the instant petition will be made part of the application file.

The Request to Re-publish the Application

The instant request is that the application be republished because the patent application publication fails to contains a copy of Figure 4 (which Applicant has demonstrated receipt of by this Office on filing of the application.

Applicant is advised that 37 CFR 1.221 (b) is applicable "only when the Office makes a material mistake which is apparent from Office records…. Any request for a corrected publication or revised patent application publication other than provided as provided in paragraph (a) of this section must be filed within two months from the date of the patent application publication. This period is not extendable." A material mistake must affect the public's ability to appreciate the technical disclosure of the patent application publication, to determine the scope of the patent application publication, or to determine the scope of the provisional rights that an applicant may seek to enforce upon issuance of a patent. [2]

---

[1] A review of the original petition papers filed on May 14, 2001 reveal that neither a copy of the return-receipt postcard, nor a copy of the missing drawing sheet/Figure, were filed at that time. In the first-filed April 28, 2006 petition, Applicant included the copy of the postcard (but not the drawing) with the re-filed petition. The petition was dismissed in a Decision mailed May 31, 2006. With the second-filed April 28, 2006 petition, Applicant has included a copy of the missing drawing Figure.

[2] Changes to Implement Eighteen-Month Publication of Patent Applications, 65 FR 57023, 57038 (Sept. 20, 2000), 1239, Off. Gaz. Pat. Office Notices 63, 75 (Oct. 10, 2000) (final rule).

The request for corrected publication received on filing the instant petition, was not timely filed under 37 CFR 1.221(b)[3].

Moreover, the error in failing to print Figure 4 is an Office mistake, but it is not a material mistake under 37 CFR 1.221(b). The error does not affect the public's ability to appreciate the technical disclosure of the patent application publication, to determine the scope of the patent application publication, or to determine the scope of the provisional rights that an applicant may seek to enforce upon issuance of a patent.

Accordingly, the request to re-publish the application is dismissed.

The fee for the petition requesting republication of the application under 37 CFR 1.221 is $130.00. Applicant has submitted $130.00 for the petition under 37 CFR 1.182, which is unnecessary in view of the Office mistake. The fee has been applied to the fee for requesting republication of the application under 37 CFR 1.221. Applicant is also advised that the fee for a petition under 37 CFR 1.182 is $400.00.

The application will be referred to the Office of Initial Patent Examination for further processing as a nonprovisional application with a filing date of January 19, 2001, and an indication that 4 sheets of Drawings (Figures 1 through 4) were present on filing, using Figures 4 supplied with the instant petition.

Telephone inquiries concerning this matter should be directed to the undersigned at (571) 272-3232.

Derek L. Woods
Attorney
Office of Petitions

[3] The May 14, 2001 petition was not grantable as-filed, nor did it include a request to re-publish the application.

UNITED STATES PATENT AND TRADEMARK OFFICE

Commissioner for Patents
United States Patent and Trademark Office
P.O. Box 1450
Alexandria, VA 22313-1450
www.uspto.gov

BRINKS HOFER GILSON & LIONE
P.O. BOX 10395
CHICAGO IL 60610

COPY MAILED

JUN 2 0 2005

OFFICE OF PETITIONS

ON PETITION

In re Application of	:	
Stephan Doliov	:	
Application No. 09/765,802	:	
Filed: January 19, 2001	:	
Attorney Docket No. 9623/314	:	

This is a decision on the petition, filed June 9, 2005, under 37 CFR 1.313(c)(2) to withdraw the above-identified application from issue after payment of the issue fee.

The petition is **GRANTED.**

The above-identified application is withdrawn from issue for consideration of a submission under 37 CFR 1.114 (request for continued examination). See 37 CFR 1.313(c)(2).

Petitioner is advised that the issue fee paid on May 16, 2005 in the above-identified application cannot be refunded. If, however, the above-identified application is again allowed, petitioner may request that it be applied towards the issue fee required by the new Notice of Allowance.[1]

Telephone inquiries should be directed to the undersigned at (571) 272-3208.

The examiner of Technology Center AU 2165 will consider the request for continued examination under 37 CFR 1.114.

Karen Creasy

Karen Creasy
Petitions Examiner
Office of Petitions
Office of the Deputy Commissioner
for Patent Examination Policy

---

[1] The request to apply the issue fee to the new Notice may be satisfied by completing and returning the new Issue Fee Transmittal Form PTOL-85(b), which includes the following language thereon: "Commissioner for Patents is requested to apply the Issue Fee and Publication Fee (if any) or re-apply any previously paid issue fee to the application identified above." Petitioner is advised that, whether a fee is indicated as being due or not, the Issue Fee Transmittal Form **must** be completed and timely submitted to avoid abandonment. Note the language in bold text on the first page of the Notice of Allowance and Fee(s) Due (PTOL-85).

UNITED STATES PATENT AND TRADEMARK OFFICE

Commissioner for Patents
United States Patent and Trademark Office
P.O. Box 1450
Alexandria, VA 22313-1450
www.uspto.gov

BRINKS HOFER GILSON & LIONE
P.O. BOX 10395
CHICAGO, IL 60610

COPY MAILED

AUG 1 0 2005

OFFICE OF PETITIONS

In re Application of	:	
Stephan Doliov	:	
Application No. 09/765,802	:	DECISION ON APPLICATION
Filed: January 19, 2001	:	FOR
Attorney Docket No. 9623/314	:	PATENT TERM ADJUSTMENT
	:	

This is a decision on the "REQUEST FOR RECONSIDERATION OF PATENT TERM ADJUSTMENT UNDER 37 CFR §1.705(b)," filed May 16, 2005. Applicant requests that an additional 169 days be added to the patent term adjustment based on the Office taking in excess of three years to issue the patent[1].

The application for patent term adjustment is **DISMISSED**.

On February 23, 2005, the Office mailed the Determination of Patent Term Adjustment under 35 U.S.C. 154(b) in the above-identified application. The Notice stated that the patent term adjustment to date is 900 days. Applicant requests additional patent term for Office delay in issuing the patent.

Ordinarily, a decision on application for patent term adjustment based on the Office taking in excess of three years to issue the patent is held in abeyance until after the actual patent date. Knowledge of the actual date the patent issues is required to calculate the amount, if any, of additional patent term patentee is entitled to for Office failure to issue the patent within 3 years. See § 1.703(b). However, in this instance, such

[1] Otherwise, applicant agrees with the initial determination of patent term adjustment at the time of the mailing of the notice of allowance.

abeyance is not necessary because the end date for calculating the period of adjustment pursuant to §§ 1.702(b) and 1.703(b) is known.

The period of adjustment under 1.702(b) does not include:

> The number of days, if any, in the period beginning on the date on which a request for continued examination of the application under 35 U.S.C. 132(b) was filed and ending on the date the patent was issued.

Thus, the filing of the request for continued examination (RCE) (in an application filed on or after May 29, 2000) cuts off any additional PTA due to failure to issue a patent within three years of the actual filing date, but does not otherwise affect PTE or PTA. On June 9, 2005, applicant filed a RCE in the instant application. Accordingly, June 9, 2005 (not the patent issue date) is the end date for calculating the period of adjustment accrued for Office delay in issuing the patent within three years.

As of the filing of the RCE on June 9, 2005, the application had been pending 3 years and 507 days after its filing date. However, if an application is entitled to an adjustment under 35 U.S.C. 154(b)(1)(B), the entire period during which the application was pending (except for periods excluded under 35 U.S.C. 154(b)(1)(B)(i)-(iii)), and not just the period beginning three years after the actual filing date of the application, is the period of delay under 35 U.S.C. 154(b)(1)(B) in determining whether periods of delay overlap under 35 U.S.C. 154(b)(2)(A). Thus, any days of delay for Office issuance of the patent more than 3 years after the filing date of the application which overlap with the days of patent term adjustment accorded prior to the issuance of the patent will not result in any additional patent term adjustment. See 35 U.S.C. 154(b)(1)(B), 35 U.S.C. 154(b)(2)(A), and 37 CFR § 1.703(f). See also *Revision of Patent Term Extension and Patent Term Adjustment Provisions; Final Rule*, 69 Fed. Reg. 21704 (April 22, 2004). In this instance, the period of delay of 903 days attributable to grounds specified in § 1.702(a)(1) overlaps with the 507 days attributable to the delay in the issuance of the patent. Thus, the period of adjustment cannot exceed the actual number of days of delay of 903 days.

The Office acknowledges submission of the $200.00 fee set forth in 37 CFR 1.18(e). No additional fees are required.

The application is being forwarded to Technology Center AU 2165 for consideration of the Request for Continued Examination (RCE) filed June 9, 2005.

Telephone inquiries specific to this matter should be directed to Nancy Johnson, Senior Petitions Attorney, at (571) 272-3219.

Karin Ferriter
Senior Legal Advisor
Office of Patent Legal Administration
Office of Deputy Commissioner
for Patent Examination Policy

UNITED STATES PATENT AND TRADEMARK OFFICE

Commissioner for Patents
United States Patent and Trademark Office
P.O. Box 1450
Alexandria, VA 22313-1450
www.uspto.gov

BRINKS HOFER GILSON & LIONE
P.O. BOX 10395
CHICAGO, IL 60610

COPY MAILED
OCT 1 3 2006
OFFICE OF PETITIONS

In re Application of	:	
Stephan Doliov	:	
Application No. 09/765,802	:	DECISION ON APPLICATION
Filed: January 19, 2001	:	FOR
Attorney Docket No. 9623/314	:	PATENT TERM ADJUSTMENT
	:	

This is a decision on the "REQUEST FOR RECONSIDERATION OF PATENT TERM ADJUSTMENT UNDER 37 CFR §1.705(b)," filed December 27, 2005. Applicant requests that 900 days be awarded for Patent Term Adjustment, rather than the 883 days indicated in the PAIR system.

The application for patent term adjustment is **GRANTED to the extent indicated herein**.

The Office has updated the PAIR screen to reflect that the correct Patent Term Adjustment (PTA) determination at the time of the mailing of the Notice of Allowance is seven hundred eighty-two **(782)** days. A copy of the updated PAIR screen, showing the correct determination, is enclosed.

On October 4, 2005, the Office mailed the Determination of Patent Term Adjustment under 35 U.S.C. 154(b) in the above-identified application. The Notice stated that the patent term adjustment to date is 883 days. Applicants dispute the reduction of 17 days associated with the filing of a request for continued examination (RCE) on June 9, 2005. Applicants assert that in response to the Notice of Allowance mailed February 23,

2005, applicants paid the Issue Fee on May 11, 2005, which should have stopped the clock.

Applicants' arguments have been considered and found somewhat persuasive. With the payment of the Issue Fee on May 11, 2005, applicants filed a complete response to the Notice of Allowance mailed February 23, 2005. This was within the three-month period set forth in § 1.704(b). Thus, a 17-day reduction pursuant to § 1.704(b) is not warranted.

However, a reduction pursuant to § 1.704(c)(10) is warranted. 37 CFR 1.704(c) provides, in pertinent part, that:

> Circumstances that constitute a failure of the applicant to engage in reasonable efforts to conclude processing or examination of an application also include the following circumstances, which will result in the following reduction of the period of adjustment set forth in § 1.703 to the extent that the periods are not overlapping:
>
> (10) Submission of an amendment under § 1.312 or other paper after a notice of allowance has been given or mailed, in which case the period of adjustment set forth in § 1.703 shall be reduced by the lesser of:
>
> (i) The number of days, if any, beginning on the date the amendment under § 1.312 or other paper was filed and ending on the mailing date of the Office action or notice in response to the amendment under § 1.312 or such other paper; or
>
> (ii) Four months;

The record confirms that the withdrawal from issue, RCE and Information Disclosure Statement (IDS) were filed after the mailing of a notice of allowance. A review of the IDS confirms that it did not include a § 1.704(d) statement. The RCE and IDS were responded to with the mailing of a second Notice of Allowance on October 4, 2005. By definition, this is a failure to engage in reasonable efforts to conclude prosecution within the meaning of 1.704(c)(10). Thus, a period of reduction of 118 days, for the period beginning on June 9, 2005 and ending on October 4, 2005 is warranted.

It is noted that 2 other papers were filed after the mailing of the notice of allowance. On July 11, 2005, applicants filed a request for corrected filing receipt. Accompanying this paper was a showing that the paper was a copy of the request as previously filed (but not acted on) on May 10, 2001, prior to the mailing of the notice of allowance. On August 8, 2005, applicants filed another IDS. This IDS did include a § 1.704(d) statement. As such, no reduction under 1.704(c)(10) is warranted for the filing of these 2 papers.

In view thereof, the determination of patent term adjustment at the time of the mailing of the notice of allowance mailed October 4, 2005 is seven hundred eighty-two (782) days.

The Office acknowledges submission of the $200.00 fee set forth in 37 CFR 1.18(e). No additional fees are required.

The application is being forwarded to the Office of Patent Publication for issuance of the patent. The patent term adjustment indicated on the patent (as shown on the Issue Notification mailed about three weeks prior to patent issuance) will include any additional adjustment accrued both for Office delay in issuing the patent more than four months after payment of the issue fee and satisfaction of all outstanding requirements, and for the Office taking in excess of three years to issue the patent (to the extent that the three-year period does not overlap with periods already accorded).

Telephone inquiries specific to this matter should be directed to the undersigned at (571) 272-3219.

Nancy Johnson
Senior Petitions Attorney
Office of Petitions

Day : Thursday
Date: 10/5/2006

PALM INTRANET

Time: 12:47:38

PTA Calculations for Application: 09/765802			
Application Filing Date:	01/19/2001	PTO Delay (PTO):	903
Issue Date of Patent:		Three Years:	0
Pre-Issue Petitions:	0	Applicant Delay (APPL):	20
Post-Issue Petitions:	0	Total PTA (days):	782
PTO Delay Adjustment:	-101		

File Contents History

Number	Date	Contents Description	PTO	APPL	START
77	10/05/2006	ADJUSTMENT OF PTA CALCULATION BY PTO		118	
76	10/05/2006	ADJUSTMENT OF PTA CALCULATION BY PTO	17		
57	10/04/2005	MAIL NOTICE OF ALLOWANCE			
55	09/09/2005	CORRESPONDENCE ADDRESS CHANGE			
51	08/08/2005	REFERENCE CAPTURE ON IDS			
50	08/08/2005	INFORMATION DISCLOSURE STATEMENT (IDS) FILED			
49	08/10/2005	PETITION DECISION - DISMISSED			
48	08/09/2005	NOTICE OF ALLOWANCE DATA VERIFICATION COMPLETED			
46	07/11/2005	MISCELLANEOUS INCOMING LETTER			
45	07/11/2005	MISCELLANEOUS INCOMING LETTER			
44	07/11/2005	ISSUE REVISION COMPLETED			
43	07/11/2005	NOTICE OF ALLOWABILITY			
42	07/11/2005	DATE FORWARDED TO EXAMINER			
41	06/09/2005	REQUEST FOR CONTINUED EXAMINATION (RCE)		17	26
40	07/11/2005	DISPOSAL FOR A RCE/CPA/129 (EXPRESS ABANDONMENT IF CPA)			
39	06/09/2005	WORKFLOW - REQUEST FOR RCE - FINISH			
38	06/09/2005	WORKFLOW - REQUEST FOR RCE - FINISH			
37	06/20/2005	RECORD PETITION DECISION OF GRANTED TO WITHDRAW FROM ISSUE			
36	06/09/2005	PETITION ENTERED			
35	06/09/2005	WORKFLOW - REQUEST FOR RCE - BEGIN			
34	06/03/2005	CORRESPONDENCE ADDRESS CHANGE			
33	05/16/2005	PETITION ENTERED			

32	05/27/2005	RECEIPT INTO PUBS			
31	05/20/2005	MAIL MISCELLANEOUS COMMUNICATION TO APPLICANT			
30	05/19/2005	MISCELLANEOUS COMMUNICATION TO APPLICANT - NO ACTION COUNT			
29	05/16/2005	ISSUE FEE PAYMENT RECEIVED			
28	03/23/2005	WORKFLOW - FILE SENT TO CONTRACTOR			
27	03/02/2005	EXPORT TO INITIAL DATA CAPTURE			
26	02/23/2005	MAIL NOTICE OF ALLOWANCE			
25	02/22/2005	ISSUE REVISION COMPLETED			
24	02/22/2005	NOTICE OF ALLOWANCE DATA VERIFICATION COMPLETED			
23	02/22/2005	NOTICE OF ALLOWABILITY			
22	02/14/2005	IFW TSS PROCESSING BY TECH CENTER COMPLETE			
21	12/10/2004	REFERENCE CAPTURE ON IDS			
20	12/10/2004	INFORMATION DISCLOSURE STATEMENT (IDS) FILED		0	18
19	02/14/2005	DATE FORWARDED TO EXAMINER			
18	12/10/2004	RESPONSE AFTER NON-FINAL ACTION		3	15
17	12/10/2004	WORKFLOW INCOMING AMENDMENT IFW			
16	10/13/2004	CASE DOCKETED TO EXAMINER IN GAU			
15	09/07/2004	MAIL NON-FINAL REJECTION	903		-1
14	09/03/2004	NON-FINAL REJECTION			
13	08/09/2004	CASE DOCKETED TO EXAMINER IN GAU			
12	08/02/2004	TRANSFER INQUIRY TO GAU			
11	01/26/2004	INFORMATION DISCLOSURE STATEMENT (IDS) FILED			
10	09/03/2002	INFORMATION DISCLOSURE STATEMENT (IDS) FILED			
9	01/29/2002	INFORMATION DISCLOSURE STATEMENT (IDS) FILED			
8	05/14/2001	PRELIMINARY AMENDMENT			
7	05/14/2001	INFORMATION DISCLOSURE STATEMENT (IDS) FILED			
6	05/19/2001	CASE DOCKETED TO EXAMINER IN GAU			
5	03/14/2001	APPLICATION DISPATCHED FROM OIPE			
4	03/13/2001	CORRESPONDENCE ADDRESS CHANGE			
3	03/13/2001	CORRESPONDENCE ADDRESS CHANGE			
2	02/06/2001	IFW SCAN & PACR AUTO SECURITY REVIEW			

1	01/19/2001	INITIAL EXAM TEAM NN			

Search Another: Application# Search

EXPLANATION OF PTA CALCULATION

EXPLANATION OF PTE CALCULATION

To go back use Back button on your browser toolbar.

Back to PALM | ASSIGNMENT | OASIS | Home page

UNITED STATES PATENT AND TRADEMARK OFFICE

Commissioner for Patents
United States Patent and Trademark Office
P.O. Box 1450
Alexandria, VA 22313-1450
www.uspto.gov

ROBERT M BAUER, ESQ.
LACKENBACH SIEGEL, LLP
1 CHASE ROAD
SCARSDALE NY 10583

COPY MAILED
DEC 14 2006
OFFICE OF PETITIONS

In re Application of	:	
Alastalo et al.	:	
Application No. 09/765,850	:	ON PETITION
Filed: January 19, 2001	:	
Attorney Docket No. NC19047	:	

This is a decision on the petition under 37 C.F.R. § 1.137(b), filed October 28, 2004 (courtesy copy filed March 17, 2006), to revive the above-identified application.

The petition is **GRANTED.**

The petition satisfies the conditions for revival pursuant to the provisions of 37 CFR 1.137(b) in that (1) the reply in the form of the Issue Fee Transmittal with payment of the issue and publication fees; (2) the petition fee; and (3) the required statement of unintentional delay have been received. Accordingly, the response has been accepted as having been unintentionally delayed.

This matter is being referred to the Publishing Division for processing into a patent.

Telephone inquiries regarding this decision should be directed to the undersigned at (571) 272-3206.

Liana Walsh
Petitions Examiner
Office of Petitions

UNITED STATES PATENT AND TRADEMARK OFFICE

Commissioner for Patents
United States Patent and Trademark Office
Washington, D.C. 20231
www.uspto.gov

Paper No. 6

IRELL & MANELLA LLP
840 NEWPORT CENTER DRIVE
SUITE 400
NEWPORT BEACH , CA 92660

COPY MAILED

AUG 1 2001

OFFICE OF PETITIONS
A/C PATENTS

Reissue of Patent No. 5,867,343 :
Original Issue Date: February 2, 1999 :
Application No. 09/765,891 :
Filing Date: January 18, 2001 :
Attorney Docket Number: 155634-0012:
For: METHOD AND APPARATUS FOR STORING POSITION OFFSET INFORMATION ON A HARDDRIVE ASSEMBLY CYLINDER :

DECISION GRANTING PETITION UNDER 37 CFR 1.47(a)

This is in response to a Petition Under 37 CFR 1.47(a), filed July 16, 2001, in response to a Notice to File Missing Parts of Application - Filing Date Granted, to proceed with the above-identified patent application. A three (3) month extension of time was requested and is hereby granted.

The petition is **granted**.

The above-identified application and papers have been reviewed and found in compliance with 37 CFR 1.47(a). This application is hereby accorded Rule 1.47(a) status.

Petitioner has shown that the non-signing inventor, Jong-Ming Lin, refuses to sign the declaration after being presented with the above-identified application and declaration.

As provided in Rule 1.47(a), this Office will forward notice of this application's filing to the non-signing inventor at the address given in the Petition. Notice of the filing of this application will also be published in the Official Gazette.

Deposit account, number 09-0946, has been charged the petition fee OF $130.00 in accordance with the authorization in the petition.

The application file is being forwarded to Office of Initial Patent Examination for entry of Rule 47 status.

Telephone inquiries regarding this decision should be directed to Petitions Attorney Derek L. Woods at (703) 305-0014.

for

Beverly M. Flanagan
Supervisory Petitions Examiner
Office of Petitions
Office of the Deputy Commissioner
for Patent Examination Policy

UNITED STATES PATENT AND TRADEMARK OFFICE

Commissioner for Patents
United States Patent and Trademark Office
Washington, D.C. 20231
www.uspto.gov

Mr. Jong-Ming Lin
7950 Cranberry Circle
Cupertino, CA 95014

COPY MAILED

AUG 1 2001

OFFICE OF PETITIONS
A/C PATENTS

LETTER

Reissue of Patent No. 5,867,343 :
Original Issue Date: February 2, 1999 :
Application No. 09/765,891 :
Filing Date: January 18, 2001 :
Attorney Docket Number: 155634-0012 :
For: METHOD AND APPARATUS FOR STORING POSITION OFFSET INFORMATION ON A HARDDRIVE ASSEMBLY CYLINDER :

Dear Mr. Lin:

You are named as a joint inventor in the above-identified United States patent application filed under the provisions of 35 U.S.C. 116 (United States Code) and 37 CFR 1.47(a), Rules of Practice in Patent Cases. Should a patent be granted on the application you will be designated therein as a joint inventor.

As a named inventor you are entitled to inspect any paper in the file wrapper of the application, order copies of all or any part thereof (at a prepaid cost per 37 CFR 1.19) or make your position of record in the application. Alternatively, you may arrange to do any of the preceding through a registered patent attorney or agent presenting written authorization from you. If you care to join the application, counsel of record (see below) would presumably assist you. Joining in the application would entail the filing of an appropriate oath or declaration by you pursuant to 37 CFR 1.63.

Telephone inquiries regarding this communication should be directed to Petitions Attorney Derek L. Woods at (703) 305-0014. Requests for information regarding your application should be directed to the File Information Unit at (703) 308-2733. Information regarding how to pay for and order a copy of the application, or a specific paper in the application, should be directed to Certification Division at (703) 308-9726 or 1-800-972-6382 (outside the Washington D.C. area).

Beverly M. Flanagan
Supervisory Petitions Examiner
Office of Petitions
Office of the Deputy Commissioner
for Patent Examination Policy

UNITED STATES PATENT AND TRADEMARK OFFICE

Commissioner for Patents
United States Patent and Trademark Office
P.O. Box 1450
Alexandria, VA 22313-1450
www.uspto.gov

MAIL

JUN 0 3 2005

DIRECTOR OFFICE
TECHNOLOGY CENTER 2600

MICHAEL D. STEIN
WOODCOCK, WASHBURN, KURTZ, MACKIEWICZ & NORRIS
ONE LIBERTY PLACE
46TH FLOOR
PHILADELPHIA, PA 19103

In re Application of :
Paul A Kline :
Application No. 09/765,910 :
Filed: January 19, 2001 :
For: METHOD OF ISOLATING DATA IN A POWERLINE COMMUNICATION NETWORK :

DECISION ON REQUEST TO WITHDRAW AS ATTORNEY

This is a decision on the request for withdrawal as attorney/agent and change of correspondence address filed on April 8, 2005.

A grantable request to withdraw as attorney/agent of record must do the following:
(1) indicate the present mailing address of the attorney(s)/agent(s) who seek(s) to withdraw, and
(2) be signed by each attorney/agent seeking to withdraw or clearly be signed on their behalf, and
(3) be *approved* at least thirty (30) days prior to the maximum extendable period for response to any outstanding Office Action, and
(4) indicate the address to which future correspondence should be mailed.

Requester meets the condition set forth above. Accordingly, the request is **GRANTED**.
All attorney/agents listed in the withdrawal have been withdrawn.

All future communications from the Office will be directed to the address listed below until otherwise notified by applicant. Applicant is reminded of the obligation to promptly notify the Patent and Trademark Office of any change in correspondence address to ensure receipt of all communications from the Office.

Kenneth Wieder
Special Program Examiner
Technology Center 2600
Communications
(571) 272-2986

cc: MANELLI DENISON & SELTER
2000 M STREET, N.W.
SUITE 700
WASHINGTON, D.C. 20036-3307

UNITED STATES PATENT AND TRADEMARK OFFICE

Commissioner for Patents
United States Patent and Trademark Office
P.O. Box 1450
Alexandria, VA 22313-1450
www.uspto.gov

BAKER & MCKENZIE LLP
1114 AVENUE OF THE AMERICAS
NEW YORK, NY 10036

COPY MAILED

OCT 24 2006

OFFICE OF PETITIONS

In re Application of
HOLE
Application No. 09/765,927
Filed: January 19, 2001
Attorney Docket No. 22048824-2

DECISION ON PETITION
TO WITHDRAW
FROM RECORD

This is a decision on the Request to Withdraw as attorney or agent of record under 37 C.F.R. § 1.36(b), filed August 25, 2006.

The request is **NOT APPROVED.**

A grantable request to withdraw as attorney/agent of record must be signed by every attorney/agent seeking to withdraw or contain a clear indication that one attorney is signing on behalf of another/others. A request to withdraw will not be approved unless at least 30 (thirty) days would remain between the date of approval and the later of the expiration date of a time to file a response or the expiration date of the maximum time period which can be extended under 37 C.F.R. § 1.136(a).

The request cannot be approved because no reasons for withdrawal have been provided. The Office cannot, at this time, determine whether practitioner's request is one of the mandatory or permissive reasons enumerated in 37 CFR 10.40. Any subsequent requests must include reasons for withdrawal. Please note that there is a space provided for on PTO/SB/83 (Request to Withdraw as Attorney or Agent) to supply practitioner's reasons

All future communications from the Office will continue to be directed to the above-listed address until otherwise notified by applicant.

Telephone inquiries concerning this decision should be directed to Patricia Volpe at 571-272- 6825.

David Ruggi
Petitions Examiner
Office of Petitions

cc: Baker & Botts
2001 Ross Avenue
Suite 800
Dallas, TX 75201

UNITED STATES PATENT AND TRADEMARK OFFICE

Commissioner for Patents
United States Patent and Trademark Office
Washington, D.C. 20231
www.uspto.gov

Paper No. 7

THOMAS C. FOLSOM
CHRISMAN, BYNUM & JOHNSON, P.C.
1900 FIFTEENTH STREET
BOULDER, CO 80302

COPY MAILED

JUL 30 2001

OFFICE OF PETITIONS
A/C PATENTS

In re Application of
Salim, et al.
Application No. 09/765,964
Filed: January 19, 2001
Attorney Docket No. 19382-004

DECISION ON PETITION

This is a decision on the petition filed May 29, 2001, under 37 C.F.R. §1.53(e)(2) to accord the above-identified application a filing date of January 19, 2001.

Application papers in the above-identified application were filed on January 19, 2001. However, on March 27, 2001, the Initial Patent Examination Division mailed a "Notice of Incomplete Nonprovisional Application," notifying applicant that the application papers had not been accorded a filing date because the application was deposited without drawings[1]. Applicant was also advised that the statutory basic filing fee, and oath or declaration were missing.

Petitioner asserts that the drawings were submitted with the originally filed patent application, and as evidenced by the postcard receipt were actually received by the Office. A copy of the complete nonprovisional patent application as filed was resubmitted on petition. In support of the petition, petitioner submitted a postcard receipt identifying this application, itemizing "Forty (40) sheets of drawings (Figures 1-38)" as enclosed, bearing a United States Patent and Trademark Office date-stamp of January 19, 2001, and lacking any notation of non-receipt of any item listed.

A postcard receipt which itemizes and properly identifies the items which are being filed serves as *prima facie* evidence of receipt in the Office of all items listed thereon on the date stamped thereon by the Office. See MPEP 503.

In view thereof, the petition is **GRANTED**.

Given the basis for granting the petition, no petition fee has been charged.

The statutory basic filing fee of $355, the executed declaration, and the surcharge for late filing under §1.16(e), submitted with the petition, are acknowledged and made of record.

The application is being forwarded to the Office of Initial Patent Examination (OIPE) for further processing with a filing date of January 19, 2001, using the application papers received in the Office on that date and the forty (40) sheets of drawings

[1] See 35 U.S.C. 111(a)(4).

in the Office on that date and the forty (40) sheets of drawings resubmitted on petition filed March 29, 2001. Applicant will receive appropriate notifications regarding the fees owed, if any, and other information in due course from OIPE.

Telephone inquiries related to this decision should be directed to Petitions Attorney Nancy Johnson at 703-305-0309.

for M. C. Antonakas

Beverly M. Flanagan
Supervisory Petitions Examiner
Office of Petitions
Office of the Deputy Commissioner
for Patent Examination Policy

UNITED STATES PATENT AND TRADEMARK OFFICE

COMMISSIONER FOR PATENTS
UNITED STATES PATENT AND TRADEMARK OFFICE
WASHINGTON, D.C. 20231
www.uspto.gov

MAIL

SEP 23 2003

DIRECTOR OFFICE
TECHNOLOGY CENTER 2100

Paper No. 12

IP Patents
FAEGRE & BENSON LLP
1900 Fifteenth Street
Boulder, CO 80302

In re Application of: Mohammad S. Salim, et al.	)	
Application No. 09/765,964	)	**DECISION ON REQUEST FOR**
Filed: January 19, 2001	)	**WITHDRAWAL AS ATTORNEY**
For: METHOD AND APPARATUS FOR IMPLEMENTING AN ACTIVE INFORMATION MODEL	)	

This is a decision on the Request To Withdraw from Representation filed May 28, 2003.

A grantable request to withdraw as attorney of record should indicate thereon the present mailing addresses of the attorney(s) who is/are withdrawing from the record and of the applicant. The request for withdrawal must be signed by every attorney seeking to withdraw or contain a clear indication that one attorney is signing on behalf of another/others. A request to withdraw will not be approved unless at least 30 (thirty) days would remain between the date of approval and the later of the expiration date of a time to file a response or the expiration date of the maximum time period which can be extended under 37 C.F.R. § 1. 136(a). The effective date of withdrawal being the date of decision and not the date of request. See M.P.E.P. § 402.06. 37 C.F.R. § 1.36 further requires that the applicant or patent owner be notified of the withdrawal of the attorney or agent.

The request is **GRANTED**.

All future communications from the Office will be directed to the below-listed address until otherwise notified by applicant. This correspondence address is provided by the withdrawn attorney(s). Applicant is reminded of the obligation to promptly notify the Patent and Trademark Office (Office) of any change in correspondence address to ensure receipt of all communications from the Office.

Vincent N. Trans
Special Programs Examiner
Technology Center 2100
Computer Architecture and Software
(703) 305-9750

cc: Mohammad S. Salim
2211 Bluebell Avenue
Boulder, CO 80302

UNITED STATES PATENT AND TRADEMARK OFFICE

Commissioner for Patents
United States Patent and Trademark Office
P.O. Box 1450
Alexandria, VA 22313-1450
www.uspto.gov

Paper No. 8

BAKER & MCKENZIE
PATENT DEPARTMENT
2001 ROSS AVENUE
SUITE 2300
DALLAS TX 75201

COPY MAILED

JUN 2 8 2004

OFFICE OF PETITIONS

In re Application of :
Bu et al. :
Application No. 09/765,966 :
Filed: January 19, 2001 :
Attorney Docket No. 87157656-002004 :

ON PETITION

This is a decision on the petition under 37 CFR 1.181, filed December 31, 2003, to withdraw the holding of abandonment.

The petition is **granted**.

This application became abandoned for failure to reply timely to the Notice to File Missing Parts in Nonprovisional Application mailed on February 27, 2001, which set a two-month extendable period to reply. Accordingly, this application became abandoned on April 28, 2001. A Notice of Abandonment was mailed on October 27, 2003.

Petitioner states that the client's Taipei address was shown as an address for the "Applicant" on an unofficial data sheet submitted on filing. Petitioner asserts that the transmittal sheet does not have a check in the checkbox for the official Application Data Sheet according to 37 CFR 1.76. Further, petitioner states that the designated correspondence address for the present application was on the original transmittal sheet upon filing.

A review of the record shows that petitioner identified customer number 022836 on the original transmittal sheet as the address of record at the time of filing. Unfortunately, the Office mistakenly entered the client's Taipei address as the correspondence address. Any inconvenience caused to petitioner is regretted.

In view of the above, the holding of abandonment is withdrawn and the application is returned to pending status.

The Office acknowledges receipt of the filing fee, claims fees, surcharge, and declaration on February 24, 2004.

This file is being forwarded to the Office of Initial Patent Examination for further processing.

Telephone inquiries should be directed to the undersigned at (703) 306-5589.

Christina Tartera Donnell

Christina Tartera Donnell
Petitions Attorney
Office of Petitions

UNITED STATES PATENT AND TRADEMARK OFFICE

COMMISSIONER FOR PATENTS
UNITED STATES PATENT AND TRADEMARK OFFICE
P.O. BOX 1450
ALEXANDRIA, VA 22313-1450
www.uspto.gov

MICHAEL SHARP
P.O. BOX 101
PORTER, TX 77365

COPY MAILED

APR 1 1 2006

OFFICE OF PETITIONS

In re Application of	:	
Michael A. Sharp	:	
Application No. 09/765,985	:	ON PETITION
Filed: January 19, 2001	:	
Attorney Docket No. N/A	:	

This is a decision on the petition under 37 CFR 1.137(b), filed by facsimile transmission on November 14, 2005 and supplemented on December 9, 2005, to revive the above-identified application.

The petition is **DISMISSED**.

A grantable petition under 37 CFR 1.137(b) must be accompanied by: (1) the required reply, unless previously filed; (2) the petition fee as set forth in 37 CFR 1.17(m); (3) a statement that the entire delay in filing the required reply from the due date for the reply until the filing of a grantable petition pursuant to 37 CFR 1.137(b) was unintentional; and (4) any terminal disclaimer (and fee as set forth in 37 CFR 1.20(d)) required by 37 CFR 1.137(d). Where there is a question as to whether either the abandonment or the delay in filing a petition under 37 CFR 1.137 was unintentional, the Commissioner may require additional information. See MPEP 711.03(c)(III)(C) and (D). The instant petition lacks item(s) (1).

A review of the record discloses that the application became abandoned for failure to reply to the Notice of Corrected Application Papers mailed May 15, 2001, requiring substitute drawings incompliance with 37 CFR 1.84. A Notice of Abandonment was mailed on March 26, 2003. On December 9, 2005, the instant petition was resubmitted to include, *inter alia*, the substitute drawings. However, the drawings are illegible. Therefore, petitioner must submit legible drawings that are in compliance with 37 CFR 1.84.

Any request for reconsideration of this decision must be submitted within **TWO (2) MONTHS** from the mail date of this decision. Extensions of time under 37 CFR 1.136(a) are permitted. The reconsideration request should include a cover letter entitled "Renewed Petition under 37 CFR 1.137(b)", along with the legible drawing sheets. This is **not** a final agency action within the meaning of 5 U.S.C. § 704.

Further correspondence with respect to this matter should be addressed as follows:

By Mail: Mail Stop PETITION
Commissioner for Patents
P. O. Box 1450
Alexandria, VA 22313-1450

By hand: U. S. Patent and Trademark Office
Customer Service Window, Mail Stop Petitions
Randolph Building
401 Dulany Street
Alexandria, VA 22314

The centralized facsimile number is **(571) 273-8300.**

Telephone inquiries concerning this decision should be directed to the undersigned at (571) 272-3226.

Andrea Smith
Petitions Examiner
Office of Petitions

UNITED STATES PATENT AND TRADEMARK OFFICE

Commissioner for Patents
United States Patent and Trademark Office
P.O. Box 1450
Alexandria, VA 22313-1450
www.uspto.gov

MICHAEL SHARP
P.O. BOX 101
PORTER, TX 77365

COPY MAILED
MAY 0 4 2006
OFFICE OF PETITIONS

In re Application of	:	
Michael A. Sharp	:	
Application No. 09/765,985	:	ON PETITION
Filed: January 19, 2001	:	
Attorney Docket No. 65-1	:	

This is a decision on the communication filed by facsimile transmission on April 11, 2006, which is being treated as a renewed petition under 37 CFR 1.137(b), to revive the above-identified application.

The petition satisfies the requirements of 37 CFR 1.137(b) in that petitioner has supplied the reply in the form of eight (8) sheets of legible drawings containing Figures 1-7. Therefore, the petition is **GRANTED**.

The application file is being referred to the Office of Initial Patent Examination for further processing.

Telephone inquiries concerning this decision should be directed to the undersigned at (571) 272-3226.

Andrea Smith
Petitions Examiner
Office of Petitions

UNITED STATES PATENT AND TRADEMARK OFFICE

COMMISSIONER FOR PATENTS
UNITED STATES PATENT AND TRADEMARK OFFICE
P.O. BOX 1450
ALEXANDRIA, VA 22313-1450
www.uspto.gov

MAIL

NOV 02 2005

DIRECTOR OFFICE
TECHNOLOGY CENTER 2600

SILICON VALLEY PATENT GROUP LLP
2350 MISSION COLLEGE BOULEVARD
SUITE 360
SANTA CLARA CA 95054

In re Application of
David Cornelius, et al.
Application No. 09/766,027
Filed: January 19, 2001
For: VOICE TRAFFIC THROUGH A FIREWALL

DECISION ON PETITION
TO WITHDRAW HOLDING OF
ABANDONMENT

This is a decision on the "Request for Entry of Attached Copy of Previously Filed Amendment" filed October 3, 2005 which is being treated as a Petition to Withdraw Holding of Abandonment pursuant to 37 C.F.R.§ 1.181(a). No fee is required.

The application was abandoned for failure to respond in a timely and effective manner to the non-final Office action mailed August 3, 2004. A Notice of Abandonment has not been mailed.

Petitioner asserts that a proper response was timely filed. In support of the petition, Petitioner has submitted, a copy of Applicant's reply and a date-stamped post card receipt evidencing receipt of the response within the United States Patent & Trademark Office on November 3, 2004.

The original correspondence filed was not matched with the file and cannot be located. However, M.P.E.P. §. 503 states, "[a] post card receipt which itemizes and properly identifies the papers which are being filed serves as *prima facie* evidence of receipt in the U.S.PTO of all the items listed thereon on the date stamped thereon by the PTO." Accordingly, it is concluded that the response was timely filed in the Patent and Trademark Office but not matched with the application file.

In view of the above stated reasons, the holding of abandonment is withdrawn.

The petition is **GRANTED.**

The application file will be forwarded TC2600's Technical Support Staff for entry of the reply; thereafter it will be forwarded to the examiner for consideration of the response in appropriate turn.

Krista Zele
Special Program Examiner
Technology Center 2600
Communications

UNITED STATES PATENT AND TRADEMARK OFFICE

Commissioner for Patents
United States Patent and Trademark Office
P.O. Box 1450
Alexandria, VA 22313-1450
www.uspto.gov

INTERVET INC.
PATENT DEPARTMENT
PO BOX 318
MILLSBORO DE 19966-0318

COPY MAILED

MAR 1 0 2006

OFFICE OF PETITIONS

ON PETITION

In re Application of :
Scot Shepard :
Application No. 09/766,043 :
Filed: January 19, 2001 :
Attorney Docket No. D/2001,690 US PD :

This is a decision on the petition under 37 CFR 1.181 to withdraw the holding of abandonment, filed June 13, 2005.

The petition to withdraw the holding of abandonment is **Dismissed**.

Any request for reconsideration should be filed within **TWO MONTHS** of the mailing date of this decision in order to be considered timely. 37 CFR 1.181(f). This time period may not be extended pursuant to 37 CFR 1.136.

This above-identified application became abandoned for failure to file a response to a Notice to File Corrected Application Papers which was mailed on February 18, 2003. The Notice to File Corrected Application Papers set an extendable two (2) month period for reply. No timely request for extension of time was obtained under the provisions of 37 CFR §1.136(a). Accordingly, this application became abandoned on April 19, 2003. A Notice of Abandonment was mailed on October 22, 2003.

Petitioner states the Notice to File Corrected application papers mailed on February 18, 2003 was never received. ~~Petitioner attest that the Notice was never received.~~ Petitioner further contends there are adequate policies and procedures in place to process mail.

The showing required to establish the failure to receive an Office communication must include a statement from the practitioner stating that the Office communication was not received by the practitioner and attesting to the fact that a search of the file jacket and docket records indicates that the Office communication was not received. A copy of the docket record where the non-received Office communication would have been entered had it been received and docketed must be attached to and referenced in practitioner's

statement.[1] The showing outlined above may not be sufficient if there are circumstances that point to a conclusion that the Notice may have been lost after receipt rather than a conclusion that the Notice was lost in the mail.
Although petitioner states that the Notice was not received, petitioner has failed to state he searched the file jacket and docket records. Petitioner has failed to provide any docket records which may support a finding that the Notice to File Corrected Application Papers was never received.

Any request for Patent Term Adjustment must be submitted in a separate paper pursuant to 37 CFR 1.4(c) and MPEP 2730.

Further correspondence with respect to this matter should be addressed as follows:

By mail:	Mail Stop Petition Commissioner for Patents P.O. Box 1450 Alexandria, VA 22313-1450
By facsimile:	(571) 273-8300
By delivery service: (FedEx, UPS, DHL, etc.)	U.S. Patent and Trademark Office Customer Service Window, Randolph Building 401 Dulany Street Alexandria, VA 22314

Telephone inquiries concerning this matter should be directed to the undersigned at (571) 272-3215.

Charlema R. Grant

Charlema R. Grant
Petitions Attorney
Office of Petitions

[1] M.P.E.P. § 711.03(c); See Notice entitled "Withdrawing the Holding of Abandonment When Office Actions Are Not Received," 1156 O.G. 53 (November 16, 1993).

UNITED STATES PATENT AND TRADEMARK OFFICE

Commissioner for Patents
United States Patent and Trademark Office
P.O. Box 1450
Alexandria, VA 22313-1450
www.uspto.gov

INTERVET INC.
PATENT DEPARTMENT
PO BOX 318
MILLSBORO DE 19966-0318

COPY MAILED
JUL 17 2006
OFFICE OF PETITIONS

In re Application of :
Scot Shepard :
Application No. 09/766,043 : ON PETITION
Filed: January 19, 2001 :
Attorney Docket No. D/2001,690 US PD :

This is a decision on the renewed petition under 37 CFR 1.181 to withdraw the holding of abandonment, filed March 20, 2006.

The petition to withdraw the holding of abandonment is **GRANTED**.

This above-identified application became abandoned for failure to file a response to a Notice to File Corrected Application Papers which was mailed on February 18, 2003. The Notice to File Corrected Application Papers set an extendable two (2) month period for reply. No timely request for extension of time was obtained under the provisions of 37 CFR §1.136(a). Accordingly, this application became abandoned on April 19, 2003. A Notice of Abandonment was mailed on October 22, 2003. A petition to withdraw the holding of abandonment was dismissed on March 10, 2006.

Petitioner states the Notice to File Corrected application papers mailed on February 18, 2003 was never received. Petitioner states a search of the file jacket and docket records confirms the Notice was not received. In support of petitioner's contention, a copy of the file jacket and docket records have been provided.

This application is being forwarded to the Office of Initial Patent Examination for further processing

Telephone inquiries concerning this matter should be directed to the undersigned at (571) 272-3215.

Charlema R. Grant

Charlema R. Grant
Petitions Attorney
Office of Petitions

UNITED STATES PATENT AND TRADEMARK OFFICE

Commissioner for Patents
United States Patent and Trademark Office
P.O. Box 1450
Alexandria, VA 22313-1450
www.uspto.gov

Paper No. 10

Nicholas DE SANTO
423 MT. LAKE RD
Great Meadows NJ 07838

COPY MAILED

FEB 29 2008

OFFICE OF PETITIONS

ON PETITION

In re Patent No.: 6,550,819 :
Issue Date: April 22, 2003 :
Application No.: 09/766,063 :
Filed: January 22, 2001 :
Attorney Docket No. AERO 3.0.-001

This is a decision on the petition, filed August 21, 2007, under 37 CFR 1.378(c) to accept the unintentionally delayed payment of maintenance fee for the above-identified patent.

The petition is **GRANTED**.

The patent issued April 22, 2003. The grace period for paying the 3.5-year maintenance fee expired at midnight April 22, 2007. Therefore, since the petition was filed within twenty-four months after the six-month grace period provided in 37 CFR 1.362(e), this petition was timely filed under the provisions of 37 CFR 1.378(c).

It is not apparent whether the person signing the statement of unintentional delay was in a position to have firsthand or direct knowledge of the facts and circumstances of the delay at issue. Nevertheless, such statement is being treated as having been made as the result of a reasonable inquiry into the facts and circumstances of such delay. In the event that such an inquiry has not been made, petitioner must make such an inquiry. If such inquiry results in the discovery that the delay in paying the maintenance fee under 37 CFR 1.378(c) was intentional, petitioner must notify the Office.

If petitioner desires to receive future correspondence regarding any Maintenance Fee Reminder which **may** be mailed concerning this patent, a Fee Address should be submitted to Maintenance Fee Division.

The maintenance fee of $450.00 and the surcharge of $1640.00 are accepted. The above-identified patent is hereby reinstated as of the mail date of this decision.

The file is being forwarded to the Files Repository.

Telephone inquiries concerning this matter may be directed to the undersigned at (571) 272-3222.

Kenya A. McLaughlin
Petitions Attorney
Office of Petitions

UNITED STATES PATENT AND TRADEMARK OFFICE

Commissioner for Patents
United States Patent and Trademark Office
P.O. Box 1450
Alexandria, VA 22313-1450
www.uspto.gov

Paper 12

KALOW & SPRINGUT LLP
488 MADISON AVENUE
19TH FLOOR
NEW YORK NY 10022

COPY MAILED

FEB 1 2 2007

OFFICE OF PETITIONS

In re Application of :
John D. Graham et al. :
Application No. 09/766,067 : ON PETITION
Filed: January 19, 2001 :
Attorney Docket No.: **GTC 0005-US** :

This is a decision on the petition filed September 15, 2006 under 37 CFR 1.137(b),[1] to revive the above-identified application.

The petition is **GRANTED**.

This application became abandoned for failure to timely reply to the non-Final Office Action mailed April 26, 2004. A shortened statutory period of three months was set for replying to the non-Final Office Action. No extensions of time having been requested, this application became abandoned July 27, 2004. Accordingly, a Notice of Abandonment was mailed on November 29, 2004.

This matter is being referred to Technology Center 2176 for appropriate action on the amendment filed September 15, 2006.

Telephone inquiries concerning this matter should be directed to the undersigned Petitions Attorney at (571) 272-3212.

Patricia Faison-Ball
Senior Petitions Attorney
Office of Petitions

---

[1]Effective December 1, 1997, the provisions of 37 CFR 1.137(b) now provide that where the delay in reply was unintentional, a petition may be filed to revive an abandoned application or a lapsed patent pursuant to 37 CFR 1.137(b). A grantable petition filed under the provisions of 37 CFR 1.137(b) must be accompanied by:

(1) the required reply, unless previously filed. In a nonprovisional application abandoned for failure to prosecute, the required reply may be met by the filing of a continuing application. In a nonprovisional application filed on or after June 8, 1995, and abandoned for failure to prosecute, the required reply may also be met by the filing of a request for continued examination in compliance with § 1.114. In an application or patent, abandoned or lapsed for failure to pay the issue fee or any portion thereof, the required reply must be the payment of the issue fee or any outstanding balance thereof. In an application abandoned for failure to pay the publication fee, the required reply must include payment of the publication fee.

(2) the petition fee as set forth in 37 CFR 1.17(m);

(3) a statement that the entire delay in filing the required reply from the due date for the reply until the filing of a grantable petition pursuant to 37 CFR 1.137(b) was unintentional. The Commissioner may required additional information where there is a question whether the delay was unintentional; and

(4) any terminal disclaimer (and fee as set forth in 37 CFR 1.20(d)) required pursuant to 37 CFR 1.137(c)).

UNITED STATES PATENT AND TRADEMARK OFFICE

COMMISSIONER FOR PATENTS
UNITED STATES PATENT AND TRADEMARK OFFICE
P.O. BOX 1450
ALEXANDRIA, VA 22313-1450
www.uspto.gov

SMYRSKI LAW GROUP, A PROFESSIONAL CORPORATION
3310 AIRPORT AVENUE, SW
SANTA MONICA, CA 90405

COPY MAILED

JUL 05 2007

OFFICE OF PETITIONS

In re Application of	:	
Lenny Lipton, et al.	:	
Application No. 09/766,130	:	ON PETITION
Filed: January 19, 2001	:	
Attorney Docket No. 300.57	:	

This is a decision on the petition under 37 CFR 1.137(b), filed February 16, 2007, to revive the above-identified application.

The petition is **GRANTED**.

The application became abandoned for failure to timely file a reply within the meaning of 37 CFR 1.113 to the final Office action of April 5, 2006. A notice of Abandonment was mailed on November 22, 2006. The proposed reply required for consideration of a petition to revive must be a Notice of Appeal (and appeal fee required by 37 CFR 41.20(b)(2), an amendment that *prima facie* places the application in condition for allowance, a Request for Continued Examination and submission (37 CFR 1.114), or the filing of a continuing application under 37 CFR 1.53(b). See MPEP 711.03(c)(III)(A)(2). On February 16, 2007, the present petition was filed.

The petition satisfies the requirements of 37 CFR 1.137(b) in that petitioner has supplied (1) the reply in the form of a Request for Continued Examination (RCE), including the fee of $395 and the submission required by 37 CFR 1.114; (2) the petition fee of $750; and (3) an adequate statement of unintentional delay.

The application is being referred to Technology Center AU 2629 for processing of the RCE and for appropriate action by the Examiner in the normal course of business on the amendment submitted in accordance with 37 CFR 1.114.

Telephone inquiries concerning this decision should be directed to the undersigned at (571) 272-3204. Inquiries relating to further prosecution should be directed to the Technology Center.

Sherry D. Brinkley
Petitions Examiner
Office of Petitions

UNITED STATES PATENT AND TRADEMARK OFFICE

Commissioner for Patents
United States Patent and Trademark Office
P.O. Box 1450
Alexandria, VA 22313-1450
www.uspto.gov

SCHWEITZER CORNMAN GROSS & BONDELL LLP
292 MADISON AVENUE - 19TH FLOOR
NEW YORK, NY 10017

COPY MAILED
SEP 0 8 2004
OFFICE OF PETITIONS

In re Application of	:
Sahasranamam R. Ullanoormadam	:
Application No. 09/766,158	: DECISION GRANTING PETITION
Filed: January 19, 2001	: UNDER 37 CFR 1.182
Attorney Docket No. 1490-001P/FS3	:

This is a decision on the petition under 37 CFR 1.182, filed August 20, 2004, to correct the inventor's name.

The petition is **granted**.

If the printing of this application has progressed to the point where the correction to the inventor's name cannot be included on the printed patent, petitioner may request a Certificate of Correction pursuant to the provisions of 37 CFR 1.323 and pay the required $100 fee therefor.

A corrected Filing Receipt with the desired correction to the inventor's name accompanies this decision on petition.

This matter is being referred to Publishing Division.

Frances Hicks
Frances Hicks
Petitions Examiner
Office of Petitions
Office of the Deputy Commissioner
for Patent Examination Policy

Enclosure: Corrected Filing Receipt

UNITED STATES PATENT AND TRADEMARK OFFICE

Commissioner for Patents
United States Patent and Trademark Office
P.O. Box 1450
Alexandria, VA 22313-145

NOV - 2 2004

MAILED
NOV - 2 2004
OFFICE OF THE DIRECTOR
TC 3600

PAUL HENTZEL
441 Nevada Avenue
Palo Alto, CA 94301-4122

In re application of
John J. Cahill et al
Application No. 09/766,171 :
Filed: January 22, 2001 :
For: METHOD OF ELECTRONICALLY RESERVING A SPACE FOR PARKING A VEHICLE :

DECISION ON REQUEST FOR WITHDRAWAL OF ATTORNEY

This is a decision on the request filed on September 21, 2004, under 37 CFR 1.36 and MPEP 402.06, requesting permission to withdraw as the attorney of record in the above-identified application.

The request is **NOT APPROVED**

Under 37 CFR 1.36 an attorney may withdraw only upon application to and approval by the Commissioner. It should be noted that a withdrawal is effective when approved, not when filed. Besides giving due notice to his or her client and delivering to the client all papers and property to which the client is entitled as specified under 37 CFR 10.40, approval of such a request requires that the following conditions be met:

A) Each attorney of record must sign the notice of withdrawal, or the notice must contain a clear indication of one attorney signing on behalf of another, because the Office does not recognize law firms;

B) A proper reason for the withdrawal as enumerated in 37 CFR 10.40(b) or subsection (1)-(6) of 37 CFR 10.40(c) must be provided; and

C) If withdrawal is requested in accordance with 37 CFR 10.40(c) above, there must be at least 30 days between approval of the withdrawal and the later of the expiration date of a time period for reply or the expiration date of the period which can be obtained by a petition and fee for extension of time under 37 CFR 1.136(a).

The request to withdraw as attorney is not accepted in the above-identified application because the request lacks condition B) above.

As to condition B) a proper reason for withdrawal as enumerated in 37 CFR 10.40(b) or subsection (1)-(6) of 37 CFR 10.40(c) must be provided.

Steven N. Meyers
Special Programs Examiner
Patent Technology Center 3600
(703) 308-3868

SNM/pav: 10/29/04

Under the Paperwork Reduction Act of 1995, no persons are required to respond to a collection of information unless it displays valid OMB control number.

PETITION TO ACCEPT UNINTENTIONALLY DELAYED PAYMENT OF MAINTENANCE FEE IN AN EXPIRED PATENT (37 CFR 1.378(c))

Patent Number	Issue Date (YYYY-MM-DD)	Application Number	Filing Date (YYYY-MM-DD)	Docket Number (if applicable)
6,488,527	2002-12-03	09766188	2001-01-18	AB-1112 US

CAUTION: Maintenance fee (and surcharge, if any) payment must correctly identify: (1) the patent number and (2) the application number of the actual U.S. application leading to issuance of that patent to ensure the fee(s) is/are associated with the correct patent. 37 CFR 1.366(c) and (d).

SMALL ENTITY
☒ Patentee claims, or has previously claimed, small entity status. See 37 CFR 1.27.

LOSS OF ENTITLEMENT TO SMALL ENTITY STATUS
☐ Patentee is no longer entitled to small entity status. See 37 CFR 1.27(g)

NOT Small Entity		Small Entity	
Fee	Code	Fee	Code
○ 3 ½ year	(1551)	◉ 3 ½ year	(2551)
○ 7 ½ year	(1552)	○ 7 ½ year	(2552)
○ 11 ½ year	(1553)	○ 11 ½ year	(2553)

SURCHARGE
The surcharge required by 37 CFR 1.20(i)(2) (Fee Code 1558) must be paid as a condition of accepting unintentionally delayed payment of the maintenance fee.

MAINTENANCE FEE (37 CFR 1.20(e)-(g))
The appropriate maintenance fee must be submitted with this petition.

STATEMENT
THE UNDERSIGNED CERTIFIES THAT THE DELAY IN PAYMENT OF THE MAINTENANCE FEE TO THIS PATENT WAS UNINTENTIONAL

PETITIONER(S) REQUEST THAT THE DELAYED PAYMENT OF THE MAINTENANCE FEE BE ACCEPTED AND THE PATENT REINSTATED

THIS PORTION MUST BE COMPLETED BY THE SIGNATORY OR SIGNATORIES

37 CFR 1.378(d) states: "Any petition under this section must be signed by an attorney or agent registered to practice before the Patent and Trademark Office, or by the patentee, the assignee, or other party in interest."

I certify, in accordance with 37 CFR 1.4(d)(4) that I am

◉ An attorney or agent registered to practice before the Patent and Trademark Office

○ A sole patentee

○ A joint patentee; I certify that I am authorized to sign this submission on behalf of all the other patentees.

○ A joint patentee; all of whom are signing this e-petition

○ The assignee of record of the entire interest

Patent Practitioner			
A signature of the applicant or representative is required in accordance with 37 CFR 1.33 and 10.18. Please see 37 CFR 1.4(d) for the form of the signature			
Signature	/Alan H. MacPherson/	Date (YYYY-MM-DD)	2008-11-25
Name	Alan H. MacPherson	Registration Number	24423

This collection of information is required by 37 CFR 1.378(c). The information is required to obtain or retain a benefit by the public which is to file (and by the USPTO to process) an application. Confidentiality is governed by 35 U.S.C. 122 and 37 CFR 1.11 and 1.14. This collection is estimated to take 1 hour to complete, including gathering, preparing, and submitting the completed application form to the USPTO. Time will vary depending upon the individual case. Any comments on the amount of time you require to complete this form and/ or suggestions for reducing this burden, should be sent to the Chief Information Officer, U.S. Patent and Trademark Office, U.S. Department of Commerce, P.O. Box 1450, Alexandria, VA 22313-1450. DO NOT SEND FEES OR COMPLETED FORMS TO THIS ADDRESS. **This form can only be used when in conjunction with EFS-Web. If this form is mailed to the USPTO, it may cause delays in reinstating the patent.**

Privacy Act Statement

The Privacy Act of 1974 (P.L. 93-579) requires that you be given certain information in connection with your submission of the attached form related to a patent application or patent. Accordingly, pursuant to the requirements of the Act, please be advised that: (1) the general authority for the collection of this information is 35 U.S.C. 2(b)(2); (2) furnishing of the information solicited is voluntary; and (3) the principal purpose for which the information is used by the U.S. Patent and Trademark Office is to process and/or examine your submission related to a patent application or patent. If you do not furnish the requested information, the U.S. Patent and Trademark Office may not be able to process and/or examine your submission, which may result in termination of proceedings or abandonment of the application or expiration of the patent.

The information provided by you in this form will be subject to the following routine uses:

1. The information on this form will be treated confidentially to the extent allowed under the Freedom of Information Act (5 U.S.C. 552) and the Privacy Act (5 U.S.C. 552a). Records from this system of records may be disclosed to the Department of Justice to determine whether the Freedom of Information Act requires disclosure of these record s.

2. A record from this system of records may be disclosed, as a routine use, in the course of presenting evidence to a court, magistrate, or administrative tribunal, including disclosures to opposing counsel in the course of settlement negotiations.

3. A record in this system of records may be disclosed, as a routine use, to a Member of Congress submitting a request involving an individual, to whom the record pertains, when the individual has requested assistance from the Member with respect to the subject matter of the record.

4. A record in this system of records may be disclosed, as a routine use, to a contractor of the Agency having need for the information in order to perform a contract. Recipients of information shall be required to comply with the requirements of the Privacy Act of 1974, as amended, pursuant to 5 U.S.C. 552a(m).

5. A record related to an International Application filed under the Patent Cooperation Treaty in this system of records may be disclosed, as a routine use, to the International Bureau of the World Intellectual Property Organization, pursuant to the Patent Cooperation Treaty.

6. A record in this system of records may be disclosed, as a routine use, to another federal agency for purposes of National Security review (35 U.S.C. 181) and for review pursuant to the Atomic Energy Act (42 U.S.C. 218(c)).

7. A record from this system of records may be disclosed, as a routine use, to the Administrator, General Services, or his/her designee, during an inspection of records conducted by GSA as part of that agency's responsibility to recommend improvements in records management practices and programs, under authority of 44 U.S.C. 2904 and 2906. Such disclosure shall be made in accordance with the GSA regulations governing inspection of records for this purpose, and any other relevant (i.e., GSA or Commerce) directive. Such disclosure shall not be used to make determinations about individuals.

8. A record from this system of records may be disclosed, as a routine use, to the public after either publication of the application pursuant to 35 U.S.C. 122(b) or issuance of a patent pursuant to 35 U.S.C. 151. Further, a record may be disclosed, subject to the limitations of 37 CFR 1.14, as a routine use, to the public if the record was filed in an application which became abandoned or in which the proceedings were terminated and which application is referenced by either a published application, an application open to public inspections or an issued patent.

9. A record from this system of records may be disclosed, as a routine use, to a Federal, State, or local law enforcement agency, if the USPTO becomes aware of a violation or potential violation of law or regulation.

UNITED STATES PATENT AND TRADEMARK OFFICE

Commissioner for Patents
United States Patent and Trademark Office
P.O. Box 1450
Alexandria, VA 22313-1450
www.uspto.gov

In re Patent No. 6488527
Issue Date: December 3,2002
Application No. 09766188
Filed: January 18,2001
Attorney Docket No. AB-1112 US

:
:DECISION GRANTING PETITION
:UNDER 37 CFR 1.378(c)
:

This is a decision on the electronic petition, filed November 25,2008 ,under 37 CFR 1.378(c) to accept the unintentionally delayed payment of the 3.5 year maintenance fee for the above-identified patent.

The petition is **GRANTED**.

The maintenance fee is accepted, and the above-identified patent reinstated as of November 25,2008 . This decision also constitutes notice that the fee has been accepted. An electronic copy of the petition and this decision has been created as an entry in the Image File Wrapper. Nevertheless, petitioner should print and retain an independent copy.

Telephone inquiries related to this electronic decision should be directed to the Electronic Business Center at 1-866-217-9197.

OIPE JC10 AUG 2 0 2001 PATENT & TRADEMARK OFFICE

"Express Mail" Label No. EL 903200153 US
Date of Deposit: August 20, 2001

I hereby certify that this correspondence is being deposited with the United States Postal Service "Express Mail Post Office to Address" service under 37 CFR 1.10 on the date indicated above and is addressed to:

Assistant Commission for Patents
Washington, DC 20231

TOWNSEND and TOWNSEND and CREW LLP

By: Maisie C. Livengood
Maisie C. Livengood

PATENT
Attorney Docket No.: 09/766,253
Client Reference No.: 018/180C

IN THE UNITED STATES PATENT AND TRADEMARK OFFICE

In re application of:

Cech et al.

Application No.: 09/766,253

Filed: January 19, 2001

For: NOVEL TELOMERASE

Art Unit: 1655

PRELIMINARY AMENDMENT -- SUBMISSION OF SEQUENCE LISTING UNDER 37 C.F.R. § 1.821

Box SEQUENCE
Assistant Commissioner for Patents
Washington, D.C. 20231

Sir:

In response to the Notice to File Corrected Application Papers, mailed April 19, 2001, Applicants hereby submit a paper copy of the Sequence Listing.

Please insert the enclosed pages 1 through 104 , that contain the sequence listing, after the drawings in the specification.

Applicants attest that the information contained in the Sequence Listing includes no new matter.

Respectfully submitted,

Scott Ausenhus

Scott L. Ausenhus
Reg. No. 42,271

TOWNSEND and TOWNSEND and CREW LLP
Two Embarcadero Center, 8th Floor
San Francisco, California 94111-3834
Tel: (303) 571-4000
Fax: (303) 571-4321
SLA:mcl
DE 7044605 v1

08-22-01 Sector #

OIPE JC10 AUG 2 0 2001 PATENT & TRADEMARK OFFICE

Please type a plus sign (+) inside this box → [+]

PTO/SB/21 (08-00)
Approved for use through 10/31/2002. OMB 0651-0031
U.S. Patent and Trademark Office: U.S. DEPARTMENT OF COMMERCE

Under the Paperwork Reduction Act of 1995, no persons are required to respond to a collection of information unless it displays a valid OMB control number.

TRANSMITTAL FORM

(to be used for all correspondence after initial filing)

Application Number	09/766,253
Filing Date	January 19, 2001
First Named Inventor	Cech
Group Art Unit	1655
Examiner Name	
Total Number of Pages in This Submission: 1	Attorney Docket Number: 015389002921

ENCLOSURES *(check all that apply)*

- [x] Fee Transmittal Form
  - [ ] Fee Attached
- [ ] Amendment / Response
  - [ ] After Final
  - [ ] Affidavits/declaration(s)
- [x] Extension of Time Request
- [ ] Express Abandonment Request
- [ ] Information Disclosure Statement
- [ ] Certified Copy of Priority Document(s)
- [ ] Response to Missing Parts/ Incomplete Application
  - [ ] Response to Missing Parts under 37 CFR 1.52 or 1.53
- [ ] Assignment Papers *(for an Application)*
- [x] Drawing(s)
- [ ] Licensing-related Papers
- [ ] Petition Routing Slip (PTO/SB/69) and Accompanying Petition
- [ ] Petition to Convert to a Provisional Application
- [ ] Power of Attorney, Revocation Change of Correspondence Address
- [ ] Terminal Disclaimer
- [ ] Request for Refund
- [ ] CD, Number of CD(s)
- [ ] After Allowance Communication to Group
- [ ] Appeal Communication to Board of Appeals and Interferences
- [ ] Appeal Communication to Group *(Appeal Notice, Brief, Reply Brief)*
- [ ] Proprietary Information
- [ ] Status Letter
- [x] Other Enclosure(s) *(please identify below)*:

Return Postcard; Preliminary Amendment; Request for Transfer of Computer Readable Form; Preliminary Amendment – Submission of Sequence Listing; replacement drawings; copy of Notice to File Corrected Application Papers

Remarks: The Commissioner is authorized to charge any additional fees to Deposit Account 20-1430.

SIGNATURE OF APPLICANT, ATTORNEY, OR AGENT

Firm and Individual name	Townsend and Townsend and Crew LLP Scott L. Ausenhus — Reg No. 42,271
Signature	Scott Ausenhus
Date	August 20, 2001

CERTIFICATE OF MAILING

Express Mail Label: EL 903200133 US

I hereby certify that this correspondence is being deposited with the United States Postal Service with "Express Mail Post Office to Address" service under 37 CFR 1.10 on this date August 20, 2001 and is addressed to:

Assistant Commissioner for Patents, Washington, D.C. 20231

Typed or printed name	Maisie C. Livengood		
Signature	Maisie C. Livengood	Date	August 20, 2001

Burden Hour Statement: This form is estimated to take 0.2 hours to complete. Time will vary depending upon the needs of the individual case. Any comments on the amount of time you are required to complete this form should be send to the Chief Information Officer, U.S. Patent and Trademark Office, Washington, DC 20231. DO NOT SEND FEES OR COMPLETED FORMS TO THIS ADDRESS. SEND TO: Assistant Commissioner for Patents, Washington, DC 20231.

DE 7045763 v1

EL903200133US

PTO/SB/17 (09-00)
Approved for use through 10/31/2002. OMB 0651-0032
Patent and Trademark Office: U.S. DEPARTMENT OF COMMERCE

Under the Paperwork Reduction Act of 1995, no persons are required to respond to a collection of information unless it displays a valid OMB control number.

FEE TRANSMITTAL for FY 2001

Patent fees are subject to annual revision.

OIPE JC10 AUG 2 0 2001 PATENT & TRADEMARK OFFICE

TOTAL AMOUNT OF PAYMENT ($) 390

Complete if Known	
Application Number	09/766,253
Filing Date	January 19, 2001
First Named Inventor	Cech
Examiner Name	
Group Art Unit	1655
Attorney Docket No.	015389-002921US

METHOD OF PAYMENT

1. ☒ The Commissioner is hereby authorized to charge indicated fees and credit any over payments to:

Deposit Account Number: 20-1430

Deposit Account Name: Townsend and Townsend and Crew LLP

☒ Charge Any Additional Fee Required Under 37 CFR 1.16 and 1.17

☐ Applicant claims small entity status. See 37 CFR 1.27

2. ☐ **Payment Enclosed:**

☐ Check ☐ Credit card ☐ Money Order ☐ Other

FEE CALCULATION

1. BASIC FILING FEE

Large Fee Code	Entity Fee ($)	Small Fee Code	Entity Fee ($)	Fee Description	Fee Paid
101	710	201	355	Utility filing fee	
106	320	206	160	Design filing fee	
107	490	207	245	Plant filing fee	
108	710	208	355	Reissue filing fee	
114	150	214	75	Provisional filing fee	

SUBTOTAL (1) ($)

2. EXTRA CLAIM FEES

			Extra Claims		Fee from below		Fee Paid
Total Claims		-20**	=		X	=	
Independent Claims		-3**	=		X	=	
Multiple Dependent					X	=	

Large Fee Code	Entity Fee ($)	Small Fee Code	Entity Fee ($)	Fee Description
103	18	203	9	Claims in excess of 20
102	80	202	40	Independent claims in excess of 3
104	270	204	135	Multiple dependent claim, if not paid
109	80	209	40	** Reissue independent claims over original patent
110	18	210	9	** Reissue claims in excess of 20 and over original patent

SUBTOTAL (2) ($)

**or number previously paid, if greater; For Reissues, see above

FEE CALCULATION (continued)

3. ADDITIONAL FEES

Large Fee Code	Entity Fee ($)	Small Fee Code	Entity Fee ($)	Fee Description	Fee Paid
105	130	205	65	Surcharge - late filing fee or oath	
127	50	227	25	Surcharge - late provisional filing fee or cover sheet.	
139	130	139	130	Non-English specification	
147	2,520	147	2,520	For filing a request for reexamination	
112	920*	112	920*	Requesting publication of SIR prior to Examiner action	
113	1,840*	113	1,840*	Requesting publication of SIR after Examiner action	
115	110	215	55	Extension for reply within first month	
116	390	216	195	Extension for reply within second month	390
117	890	217	445	Extension for reply within third month	
118	1,390	218	695	Extension for reply within fourth month	
128	1,890	228	945	Extension for reply within fifth month	
119	310	219	155	Notice of Appeal	
120	310	220	155	Filing a brief in support of an appeal	
121	270	221	135	Request for oral hearing	
138	1,510	138	1,510	Petition to institute a public use proceeding	
140	110	240	55	Petition to revive – unavoidable	
141	1,240	241	620	Petition to revive – unintentional	
142	1,240	242	620	Utility issue fee (or reissue)	
143	440	243	220	Design issue fee	
144	600	244	300	Plant issue fee	
122	130	122	130	Petitions to the Commissioner	
123	50	123	50	Petitions related to provisional applications	
126	180	126	180	Submission of Information Disclosure Stmt	
581	40	581	40	Recording each patent assignment per property (times number of properties)	
146	710	246	355	Filing a submission after final rejection (37 CFR § 1.129(a))	
149	710	249	355	For each additional invention to be examined (37 CFR § 1.129(b))	
179	710	279	355	Request for Continued Examination (RCE)	
169	900	169	900	Request for expedited examination of a design application	
Other fee (specify)					

The Commissioner is authorized to charge any additional fees to the above noted Deposit Account.

*Reduced by Basic Filing Fee Paid **SUBTOTAL (3)** ($)390

SUBMITTED BY				Complete *(if applicable)*	
Name (Print/Type)	Scott L. Ausenhus	*Registration No. (Attorney/Agent)*	42,271	*Telephone*	303-571-4000
Signature	Scott Ausenhus			*Date*	August 20, 2001

WARNING: Information on this form may become public. Credit card information should not be included on this form. Provide credit card information and authorization on PTO-2038.

Burden Hour Statement: This form is estimated to take 0.2 hours to complete. Time will vary depending upon the needs of the individual case. Any comments on the amount of time you are required to complete this form should be sent to the Chief Information Officer, Patent and Trademark Office, Washington, DC 20231. DO NOT SEND FEES OR COMPLETED FORMS TO THIS ADDRESS. SEND TO: Assistant Commissioner for Patents, Washington, DC 20231. DE 7045765 v1

UNITED STATES PATENT AND TRADEMARK OFFICE

COMMISSIONER FOR PATENTS
UNITED STATES PATENT AND TRADEMARK OFFICE
WASHINGTON, D.C. 20231
www.uspto.gov

APPLICATION NUMBER	FILING/RECEIPT DATE	FIRST NAMED APPLICANT	ATTORNEY DOCKET NUMBER
09/766,253	01/19/2001	Thomas R. Cech	015389-002921US

CONFIRMATION NO. 8469

FORMALITIES LETTER

OC000000005987269

20350
TOWNSEND AND TOWNSEND AND CREW
TWO EMBARCADERO CENTER
EIGHTH FLOOR
SAN FRANCISCO, CA 94111-3834

Date Mailed: 04/19/2001

NOTICE TO FILE CORRECTED APPLICATION PAPERS

Filing Date Granted

This application has been accorded an Application Number and Filing Date. The application, however, is informal since it does not comply with the regulations for the reason(s) indicated below. Applicant is given **TWO MONTHS** from the date of this Notice within which to correct the informalities indicated below. Extensions of time may be obtained by filing a petition accompanied by the extension fee under the provisions of 37 CFR 1.136(a)

The required item(s) identified below must be timely submitted to avoid abandonment:

- Substitute drawings in compliance with 37 CFR 1.84 because:
  - drawing sheets do not have the appropriate margin(s) (see 37 CFR 1.84(g)). Each sheet must include a top margin of at least 2.5 cm. (1 inch), a left side margin of at least 2.5 cm. (1 inch), a right side margin of at least 1.5 cm. (5/8 inch), and a bottom margin of at least 1.0 cm. (3/8 inch);

- This application clearly fails to comply with the requirements of 37 C.F.R. 1.821-1.825. Applicant's attention is directed to the final rulemaking notice published at 55 FR 18230 (May 1, 1990), and 1114 OG 29 (May 15, 1990). If the effective filing date is on or after July 1, 1998, see the final rulemaking notice published at 63 FR 29620 (June 1, 1998) and 1211 OG 82 (June 23, 1998). If the effective filing date is on or after September 8, 2000, see the final rulemaking notice published in the Federal Register at 65 FR 54604 (September 8, 2000) and 1238 OG 145 (September 19, 2000). Applicant must provide an initial computer readable form (CRF) copy of the "Sequence Listing", an initial paper or compact disc copy of the "Sequence Listing", as well as an amendment directing its entry into the application. Applicant must also provide a statement that the content of the sequence listing information recorded in computer readable form is identical to the written (on paper or compact disc) sequence listing and, where applicable, includes no new matter, as required by 37 CFR 1.821(e), 1.821 (f), 1.821(g), 1.825(b), or 1.825(d). If applicant desires the sequence listing in the instant application to be identical with that of another application on file in the U.S. Patent and Trademark Office, such request in accordance with 37 CFR 1.821(e) may be submitted in lieu of a new CRF.

For questions regarding compliance to these requirements, please contact:

- **For Rules Interpretation, call (703) 308-4216**
- **To Purchase PatentIn Software, call (703) 306-2600**
- **For PatentIn Software Program Help, call (703) 306-4119 or e-mail at patin21help@uspto.gov or patin3help@uspto.gov**

A copy of this notice MUST be returned with the reply.

Customer Service Center
Initial Patent Examination Division (703) 308-1202
PART 2 - COPY TO BE RETURNED WITH RESPONSE

UNITED STATES PATENT AND TRADEMARK OFFICE

COMMISSIONER FOR PATENTS
UNITED STATES PATENT AND TRADEMARK OFFICE
WASHINGTON, DC 20231
www.uspto.gov

APPLICATION NUMBER	FILING DATE	GRP ART UNIT	FIL FEE REC'D	ATTY.DOCKET.NO	DRAWINGS	TOT CLAIMS	IND CLAIMS
09/766,253	01/19/2001	1634	710	015389002921	59	10	3

CONFIRMATION NO. 8469

UPDATED FILING RECEIPT

OC000000007279737

22869
GERON CORPORATION
230 CONSTITUTION DRIVE
MENLO PARK, CA 94025

Date Mailed: 03/15/2002

RESPONSE TO REQUEST FOR CORRECTED FILING RECEIPT

Claims, Fees, and Inventors

In response to your request for a corrected Filing Receipt, the Office is unable to comply with the request because:

- [ ] The total number of claims appearing on the Filing Receipt does not include multiple dependent claims. The total fee appearing on the Filing Receipt includes the cost of multiple dependent claims that were present at the time the application was filed.
- [ ] The filing fee is correct. It may include additional claims fees and/or the surcharge under 37 CFR 1.16(e) for filing an oath/declaration or basic filing fee after the application filing date; or it may not reflect fees refunded to the applicant that were paid by mistake.
- [ ] The number of claims reflected on the filing receipt is correct. Upon review of the claims, it was found that there was a miscalculation by the applicant. This may be due to improperly presented multiple dependent claims, typographical error, misnumbering of the claims, or other oversight. An amendment may be necessary to correct the problem.
- [ ] The filing fee reflected on the filing receipt is correct. Applicant may have miscalculated the fees due.
- [ ] Applicant calculated fees as other than small entity; however, applicant asserted small entity status in the application. Therefore, fees were applied as small entity and the remainder was refunded to the applicant.
- [ ] The difference between the fees paid and the fees due was refunded to the applicant and will not be shown on the filing receipt.
- [ ] The inventor information may be truncated if the family name consists of more than 50 characters (letters and spaces combined) and if the given name consists of more than 50 characters (letters and spaces combined).

☐ The inventor's res[illegible]ce allows for up to 40 characters (letters [illegible] spaces combined).

☐ The inventor's residence will only include the city and state for U.S. residences or city and country for residences outside the U.S. (See MPEP 605.02).

☐ A petition to correct the inventorship is needed to make this change. See 37 CFR 1.48. For non-provisional applications, the petition should be directed to the Director of the examining group assigned to your application.

☐ Changes made after submission of an executed declaration to the inventor information other than correction of typographical errors must be submitted in the form of a substitute declaration. Change of inventorship requires a petition under 37 CFR 1.48.

☒ The number of drawings shown on the filing receipt reflects the number of drawing sheets submitted.

☐ The correspondence address was captured as directed by applicant on filing. If you wish correspondence to be directed otherwise, please submit a request for a change of address.

☐ The docket number allows a maximum of 25 characters.

☐ The person signing on behalf of the deceased inventor is reflected on the Filing Receipt as the legal representative.

☐ The filing date of a parent application cannot be changed by this request. A petition to correct the filing date in the parent application is required.

Customer Service Center
Office of Initial Patent Examination
(703) 308-1202

UNITED STATES PATENT AND TRADEMARK OFFICE

COMMISSIONER FOR PATENTS
UNITED STATES PATENT AND TRADEMARK OFFICE
P.O. BOX 1450
ALEXANDRIA, VA 22313-1450
www.uspto.gov

Paper No. 7

JAMES M. STIPEK
LATHROP & GAGE
SUITE 2800
2345 GRAND BOULEVARD
KANSAS CITY, MO 64108

COPY MAILED

OCT 3 1 2003

OFFICE OF PETITIONS

In re Application of	:	
Charles A. Jennings et al	:	
Application No. 09/766,278	:	DECISION GRANTING PETITION
Filed: January 19, 2001	:	UNDER 37 CFR 1.137(b)
Attorney Docket No. 389176	:	

This is a decision on the petition, filed October 16, 2003, which is being treated as a petition under 37 CFR 1.137(b) to revive the instant nonprovisional application for failure to timely notify the U.S. Patent and Trademark (USPTO) of the filing of an application in a foreign country, or under a multinational treaty that requires publication of applications eighteen months after filing. *See* 37 CFR 1.137(f).

The petition is **GRANTED**.

Petitioner states that the instant nonprovisional application is the subject of an application filed in an eighteen month publication country on January 18, 2002. However, the USPTO was unintentionally not notified of this filing within 45 days subsequent to the filing of the subject application in an eighteen month publication country.

In view of the above, this application became abandoned pursuant to 35 U.S.C. § 122(b)(2)(B)(iii) and 37 CFR 1.213(c) for failure to timely notify the Office of the filing of an application in a foreign country or under a multilateral international agreement that requires publication of applications 18 months after filing.

A petition to revive an application abandoned pursuant to 35 U.S.C. 122(b)(2)(B)(iii) for failure to notify the USPTO of a foreign filing must be accompanied by:

(1) the required reply which is met by the notification of such filing in a foreign country or under a multinational treaty;

(2) the petition fee as set forth in 37 CFR 1.17(m); and
(3) a statement that the entire delay in filing the required reply from the due date of the reply until the filing of a grantable petition was unintentional.

The instant petition has been found to be in compliance with 37 CFR 1.137(b). Accordingly, the failure to timely notify the USPTO of a foreign or international filing within 45 days after the date of filing of such foreign or international application as provided by 35 U.S.C. § 122(b)(2)(B)(iii) and 37 CFR 1.213(c) is accepted as having been unintentionally delayed.

The previous Request and Certification under 35 U.S.C. § 122(b)(2)(B)(i) has been rescinded. A Notice Regarding Rescission of Nonpublication Request which sets forth the projected publication date of February 5, 2004 accompanies this decision on petition.

Any inquiries concerning this decision may be directed to Wan Laymon at (703) 306-5685.

This application is being forwarded to Technology Center Art Unit 2611 for examination in due course.

Frances Hicks

Frances Hicks
Lead Petitions Examiner
Office of Petitions
Office of the Deputy Commissioner
for Patent Examination Policy

ATTACHMENT: Notice Regarding Rescission of Nonpublication Request

UNITED STATES PATENT AND TRADEMARK OFFICE

Commissioner for Patents
United States Patent and Trademark Office
Washington, D.C. 20231
www.uspto.gov

Paper No. 9

John S. Pratt, Esq.
Kilpatrick and Stockton, LLP
1100 Peachtree Street
Suite 2800
Atlanta, GA 30309-4530

COPY MAILED

JUN 1 8 2002

OFFICE OF PETITIONS

In re Application of
Mark Ryan, et al.
Application No. 09/766,295
Filed: January 19, 2001
Attorney Docket No. W2100/204330

DECISION GRANTING PETITION
UNDER 37 CFR 1.137(f)

This is a decision on the petition filed April 18, 2002 and supplemented on June 7, 2002, to revive the instant nonprovisional application under the unintentional provisions of 37 CFR 1.137(f).

The petition is **GRANTED**.

This application became abandoned pursuant to 35 USC 122(b)(2)(B)(iii) and 37 CFR 1.213(c) for failure to timely notify the Office of the filing of an application in a foreign country, or under a multilateral international agreement, that requires publication of applications 18 months after filing.

A petition under 37 CFR 1.137(f) must be accompanied by: (1) the reply which is met by notification of such filing in a foreign country or under a multinational treaty; (2) the petition fee as set forth in 37 CFR 1.17(m); and (3) a statement that the entire delay in filing the required reply from the due date for the reply until the filing of a grantable petition was unintentional. The Commissioner may require additional information where there is a question whether the delay was unintentional.

The instant petition has been found in compliance with the 37 CFR 1.137(f). Accordingly, the failure to timely notify the Office of a foreign or international filing within 45 days as provided by 35 USC 122(b)(2)(B)(iii) and 37 CFR 1.213(c) is accepted as having been unintentionally delayed.

The previous Request and Certification under 35 USC 122(b)(2)(B)(i) has been rescinded. A Corrected Filing Receipt which sets forth the projected publication date of September 19, 2002 accompanies this decision on petition.

Telephone inquiries concerning this decision should be directed to Marianne Morgan at (703) 306-3475.

This application is being forwarded to Technology Center Art Unit 2155 for examination in due course.

Frances M. Hicks
Lead Petitions Examiner
Office of Petitions
Office of the Deputy Commissioner
for Patent Examination Policy

ATTACHMENT: Corrected Filing Receipt

SPE RESPONSE FOR CERTIFICATE OF CORRECTION

Paper No.: _____

DATE : 6-6-07

TO SPE OF : ART UNIT 2131

SUBJECT : Request for Certificate of Correction for Appl. No.: 09/766343 Patent No.: 7159237

Please respond to this request for a certificate of correction within 7 days.

Please review the requested changes/corrections as shown in the **COCIN** document(s) in the IFW application image. No new matter should be introduced, nor should the scope or meaning of the claims be changed.

Should Coc be Approved

Please complete the response (see below) and forward the completed response to scanning using document code **COCX**.

Certificates of Correction Branch

703-308-9390 ext. 117

Thank You For Your Assistance

The request for issuing the above-identified correction(s) is hereby:

Note your decision on the appropriate box.

- ☒ Approved — All changes apply.
- ☐ Approved in Part — Specify below which changes do not apply.
- ☐ Denied — State the reasons for denial below.

Comments: _____

Kristine Kincaid

SPE

2139

Art Unit

UNITED STATES
PATENT AND
TRADEMARK OFFICE

UNDER SECRETARY OF COMMERCE FOR INTELLECTUAL PROPERTY
AND DIRECTOR OF THE UNITED STATES PATENT AND TRADEMARK OFFICE
WASHINGTON, D.C. 20231
WWW.USPTO.GOV

DEC - 9 2002

#7

MICHAEL L. GOLDMAN
NIXON PEABODY LLP
CLINTON SQUARE
P.O. BOX 31051
ROCHESTER NY 14603

In re Application of	:
Dewen Qui et al	:
Serial No.: 09/766,348	: WITHDRAWAL OF ABANDONMENT
Filed: January 19, 2001	:
Attorney Docket No.: 19603/2986	:

This is in response to applicants' petition under 37 CFR 1.181, filed October 29, 2002, requesting revival of the above-identified application based on non-receipt of an Office action.

A review of the file history shows the examiner mailed an Office action to applicants on March 11, 2002, setting a one month shortened statutory period for reply. Upon failure to receive a reply the application was held abandoned as of September 12, 2002, however a Notice of Abandonment has not yet been mailed to applicants. Applicants state that the Office action was never received and provide statements and docket record evidence of non-receipt in support thereof. In view thereof, the Notice of Abandonment is withdrawn and the application is restored to a pending status with the mailing of this decision.

Applicants' petition is **GRANTED**.

The application will be forwarded to the examiner for remailing of the last Office action.

Should there be any questions regarding this decision, please contact William R. Dixon, Jr., by mail addressed to Director, Technology Center 1600, Washington, D.C. 20231, or by telephone at (703) 308-3824 or by facsimile transmission at (703) 305-7230.

John Doll
Director, Technology Center 1600

UNITED STATES PATENT AND TRADEMARK OFFICE

Commissioner for Patents
United States Patent and Trademark Office
P.O. Box 1450
Alexandria, VA 22313-1450
www.uspto.gov

MUETING RAASCH & GEBHARDT, P.A.
P.O. BOX 581415
MINNEAPOLIS, MN 55458

COPY MAILED

AUG 3 1 2007

OFFICE OF PETITIONS

In re Patent No. 7,144,982 :
Issue Date: December 5, 2006 :
Application No. 09/766,353 : ON PETITION
Filed: January 19, 2001 :
Attorney Docket No. 110.01120101 :

This is a decision on the petition filed April 23, 2007, which is being treated as a petition under 37 CFR 3.81(b)[1] to correct assignee's name on the front page of the above-identified patent by way of a Certificate of Correction.

The petition is **granted.**

Telephone inquiries concerning this matter may be directed to the undersigned at (571) 272-3210. Any questions concerning the issuance of the Certificate of Correction should be directed to the Certificates of Correction Branch at (703) 305-8309.

This application is being forwarded to the Certificates of Correction Branch for issuance of the requested Certificate of Correction.

Irvin Dingle
Petitions Examiner
Office of Petitions

[1] See Official Gazette of June 22, 2004

UNITED STATES PATENT AND TRADEMARK OFFICE

Commissioner for Patents
United States Patent and Trademark Office
P.O. Box 1450
Alexandria, VA 22313-1450
www.uspto.gov

Patrea L. Pabst
Pabst Patent Group LLP
400 Colony Square, Suite 1200
1201 Peachtree Street
Atlanta, GA 30361

COPY MAILED

MAR 1 8 2008

OFFICE OF PETITIONS

In re Application of	:	
Solomon S. Steiner et al.	:	
Application No. 09/766,362	:	DECISION ON PETITION
Filed: January 19, 2001	:	TO WITHDRAW
Attorney Docket No. PDC 119	:	FROM RECORD
	:	

This is a decision on the Request to Withdraw as attorney or agent of record under 37 C.F.R. § 1.36(b), filed December 5, 2007.

The request is **NOT APPROVED** because it is moot.

A review of the file record indicates that the power of attorney to Pabst Patent Group LLP has been revoked by the assignee of the patent application on January 16, 2008. Accordingly, the request to withdraw under 37 C.F.R. § 1.36(b) is moot.

All future communications from the Office will continue to be directed to the below-listed address until otherwise notified by applicant.

Telephone inquires concerning this decision should be directed to Terri Williams at 571-272-2991.

T. Williams
Terri Williams
Petitions Examiner
Office of Petitions

cc: **Kirkpatrick & Lockhart Preston Gates Ellis LLP**
1900 Main Street, Suite 600
Irvine, CA 92614-7319

UNITED STATES PATENT AND TRADEMARK OFFICE

COMMISSIONER FOR PATENTS
UNITED STATES PATENT AND TRADEMARK OFFICE
P.O. BOX 1450
ALEXANDRIA, VA 22313-1450
www.uspto.gov

MAIL

JAN 21 2005

DIRECTOR OFFICE
TECHNOLOGY CENTER 2600

GEORGE L. WILLIAMSON
P.O. BOX 508
FAIRHOPE AL 36533-0508

In re Application of
Robert PERRAULT
Application No. 09/766,370
Filed: January 29, 2004
For: **MOISTURE DETECTOR**

DECISION ON PETITION
TO MAKE SPECIAL

This is a decision on the Request for Reconsideration on the denial of petition under 37 C.F.R. § 1.102, filed November 29, 2004, to make the above-identified application special.

Petitioner requests that the above-identified application be made special under the accelerated examination procedure set forth in M.P.E.P. § 708.02, Section V: Environment.

A grantable petition to make an application special under 37 C.F.R. § 1.102 and in accordance with M.P.E.P. § 708.02, Section V, for an invention which materially enhances the quality of the environment of mankind by contributing to the restoration or maintenance of the basic life-sustaining elements - air, water and soil, must be accompanied by statements under 37 C.F.R. § 1.102 by the applicant or his/her attorney or agent explaining how the invention contributes to the restoration or maintenance of one of these life sustaining elements.

The petition was accompanied by a declaration by the attorney of record indicating that the invention will enable a user to easily and cheaply detect moisture.

Petitioner has not shown how a detector can materially enhance the quality of the environment by only detecting an environmental occurrence. There is no showing that the detector of the instant invention can enhance the environment by contributing to the restoration or maintenance of the basic life sustaining elements.

Accordingly, the petition on request for reconsideration is **DENIED**.

Kenneth A. Wieder
Special Program Examiner
Technology Center 2600
Communications

UNITED STATES PATENT AND TRADEMARK OFFICE

COMMISSIONER FOR PATENTS
UNITED STATES PATENT AND TRADEMARK OFFICE
WASHINGTON, DC 20231
www.uspto.gov

Paper No. 4

Squire, Sanders & Dempsey L.L.P.
Two Renaissance Square
Suite 2700
40 North Central Avenue
Phoenix AZ 85004-4498

MAILED

FEB 1 4 2003

Technology Center 2600

In re Application of :
Hidemasa Funatsu :
Application No. 09/766,391 : DECISION ON REQUEST TO
Filed: January 19, 2001 : WITHDRAW AS ATTORNEY
For: **METHOD AND APPARATUS FOR IDENTIFYING COMMUNICATIONS IN AN ATM/CIRCUIT-SWITCHED COMMUNICATION NETWORK** :

This is a decision on the request to withdraw as attorney/agent of record filed on December 26, 2002.

A grantable request to withdraw as attorney/agent of record must:
(1) indicate the present mailing address of the attorney(s)/agent(s) who seek(s) to withdraw, and
(2) be signed by each attorney/agent seeking to withdraw or clearly be signed on their behalf, and
(3) be *approved* at least thirty (30) days prior to the maximum extendable period for response to any outstanding Office Action, and
(4) indicate the address to which future correspondence should be mailed.

Petitioner has met all of the above. Accordingly, the request is **GRANTED**.

All attorneys and agents of record in this application are removed from record.

All future communications from the Office will be directed to the address listed below until otherwise notified by applicant. Applicant is reminded of the obligation to promptly notify the Patent and Trademark Office of any change in correspondence address to ensure receipt of all communications from the Office.

Krista Zele
Special Program Examiner
Technology Center 2600
Communications
(703) 305-4701

cc: Tuaoi Communications, Inc.
2432 W. Peoria Avenue, Suite 1181
Phoenix, AZ 85029

UNITED STATES PATENT AND TRADEMARK OFFICE

COMMISSIONER FOR PATENT
UNITED STATES PATENT AND TRADEMARK OFFIC
WASHINGTON, D.C. 20231
www.uspto.go

FINNEGAN, HENDERSON, FARABOW, GARRETT &
DUNNER LLP
1300 I STREET, NW.
WASHINGTON DC 20005

COPY MAILED

APR 0 2 2003

OFFICE OF PETITIONS

Applicant: Douin et al.
Appl. No.: 09/766,403
Filing Date: January 22, 2001
Title: NANOEMULSIONS COMPRISING AT LEAST ONE AMPHIPHILIC LIPID, AT LEAST ONE OIL, AND AT LEAST ONE NONIONIC POLYMER, AND USES THEREOF
Attorney Docket No.: 5725.0833-00
Pub. No.: US 2002/0098215 A1
Pub. Date: July 25, 2002

This is a decision on the request for corrected patent application publication under 37 CFR 1.221(b), filed on September 20, 2002 for the above-identified application.

The request is granted.

The corrected patent application publication will be published in due course.

Inquires concerning this communication should be directed to Mark Polutta at (703) 308-8122 (voice) or (703) 746-3465 (facsimile).

Mark O. Polutta
Office of Patent Legal Administration
Office of the Deputy Commissioner
for Patent Examination Policy

UNITED STATES PATENT AND TRADEMARK OFFICE

JAN 11 2006

Commissioner for Patents
United States Patent and Trademark Office
P.O. Box 1450
Alexandria, VA 22313-1450
www.uspto.gov

MARK J. NUELL, PHD
BIRCH, STEWART, KOLASCH & BIRCH, LLP
8110 GATEHOUSE ROAD
SUITE 100 EAST
P.O. BOX 747
FALLS CHURCH, VIRGINIA 22040-0747

In re Application of	:
Ge Ruowen et al	:
Serial No.: 09/766,412	: PETITION DECISION
Filed: January 22, 2001	:
Attorney Docket No.: 1781-0215P	:

This letter is in response to the Petition under 37 C.F.R. 1.144, and 1.181 filed on November 15, 2005, to review the restriction requirement and withdraw Finality of the last Office action.

BACKGROUND

A review of the file history shows that this application was filed under 35 U.S.C. 111 and that the Office set forth a restriction requirement under 35 U.S.C. 121, of claims 1-24 in an office action mailed June 4, 2004. The groupings are reproduced below:

> Group I, claims 1-18, drawn to a peptide and pharmaceutical composition thereof;
>
> Group II, claims 19-21, drawn to a method for preventing or treating undesired angiogenesis by administering the peptide formulation of Group I;
>
> Group III, claims 22-24, drawn to a method for preventing or treating primary tumor growth or metastasis by administering the peptide formulation of Group I.

The Examiner supported this restriction between the peptide and pharmaceutical composition thereof, method for preventing or treating undesired angiogenesis by administering the peptide formulation of Group I and method for preventing or treating primary tumor growth or metastasis by administering the peptide formulation of Group I with appropriate reasoning.

The examiner then stated that Groups II and III are distinct inventions because, "...the different inventions use different methods of treatment."

The examiner also set forth a sequence election requirement stating that the multiple SEQ ID NOS represent sequences which are considered to be patentably distinct compounds. The sequences are patentably distinct because they are unrelated sequences and each unrelated sequence is considered a separate and distinct product, therefore, a further restriction is applied to each sequence.

Applicants elected group I, claims 1-18 and SEQ ID NO: 30 with traverse in the response filed on September 25, 2003.

The examiner addressed applicants' traversal of the restriction requirement by first confirming that applicant elected Group I and SEQ ID NO: 30. The examiner noted that applicants had amended the claims to provide for a method for preventing or treating undesired angiogenesis (Group II) and a method for preventing or treating primary tumor growth or metastasis of Group III along with the peptide of Group I by amending the claims to read as methods for preventing or treating primary tumor growth or metastasis by preventing undesired angiogenesis by administering the compound of Group I. As such, the examiner explained, the method of treating tumor growth appears to be a species of the method for preventing undesired angiogenesis. The examiner also stated that the sequences are patentably distinct because they are unrelated sequences and each unrelated sequence is considered a separate and distinct product, therefore, a further restriction is applied to each sequence. Thus, all SEQ ID NOS's other than SEQ ID NO: 30 are withdrawn from further consideration pursuant to 37 CFR 1.142 (b) as being drawn to nonelected inventions, there being no allowable generic or linking claim. The examiner then revised the restriction requirement in view of applicant's amendments and sent out the following new restriction requirement to replace the former one on February 20, 2004:

Restriction to one of the following inventions is required under 35 U.S.C. 121:

> Group I, claims 1-8, 13, 14, 19, 22, and 25-28, drawn to a plasminogen, pharmaceutical composition thereof and to a method for preventing or treating primary tumor growth or metastasis by preventing undesired angiogenesis;
>
> Group II, claims 1-8, 13, 14, 19, 22, and 25-28, drawn to endostatin, pharmaceutical composition thereof and to a method for preventing or treating primary tumor growth or metastasis by preventing undesired angiogenesis;
>
> Group III, claims 1-8, 13, 14, 19, 22, and 25-28, drawn to vascular endothelial growth factor (VEGF), pharmaceutical composition thereof and to a method for preventing or treating primary tumor growth or metastasis by preventing undesired angiogenesis;
>
> Group IV, claims 1-8, 13, 14, 19, 22, and 25-28, drawn to KDR/FLK-1 receptor protein, pharmaceutical composition thereof and to a method for preventing or treating primary tumor growth or metastasis by preventing undesired angiogenesis;

The examiner stated that the groups were unrelated since the compounds/compositions are not connected in design, operation or effect.

Applicants responded to the new requirement by electing Group II, with traverse. The traversal was on the grounds that the inventions of Groups I-IV as disclosed and claimed in this application would most efficiently be examined together. Applicants stated that since claims 9, 10, 15, 16, 20 and 23 were not restricted out that it was presumed that these claims would be examined along with Group II.

The examiner mailed a non-final office action to applicants on June 4, 2004, stating that the election of Group II was acknowledged and that although the compositions/compounds of Groups I-IV are used as pharmaceutical formulations for the same method of preventing or treating primary tumor growth or metastasis by preventing undesired angiogenesis, the compositions/compounds have different sources, structures resulting in different functions and different effects. The examiner in response to the applicants' remarks about claims 9, 10, 15, 16, 20 and 23 being examined along with Group II stated that SEQ ID NO: 30 will be examined and that all other SEQ ID NOs other than SEQ ID NO:30 are withdrawn from further consideration.

Applicants noted in their response to the above action that they elected SEQ ID NO:30 and that all of the claims (1,2,6-8, 10, 13-16, 19, 20, 22, 23, 25-29) all read on or relate to the elected species.

The examiner in an Office action mailed November 17, 2004, stated that claims 10, 15, 16, 20 and 23 are withdrawn as non-elected inventions. The examiner advised applicants to cancel these claims and then indicated that claims 1, 2, 6-8, 13, 14, 19, 25-27, and 29 were allowable.

Applicants in the next response indicated that each of claims 10, 15, 16, 20, 23 depends from allowed claim 1. Applicants then argued that since claim 1 is allowable the examiner must examine other species that are embraced by the generic claim, which includes the allowable sequence (SEQ ID NO :30).

In the Office action mailed April 8, 2005, the examiner indicated that claims 10, 15, 16, 20 and 23 are withdrawn as directed to a non-elected invention for the reasons of record. Next the examiner stated that the allowed claims were now no longer allowable due to non-compliance with 35 U.S.C. 112, first paragraph.

Applicants in response to the above action indicated that claims 1, 2, 6-8, 10, 13-16, 19, 20, 22, 23 and 25-29 all read on or relate to the elected sequence. The outstanding Office action indicated that claims 10, 15, 16, 20 and 23 were withdrawn from consideration. Applicants had elected SEQ ID NO: 30 which is recited in claim 25. Claim 25 depends from claim 10. In other words, claim 10 and claims 15, 16, 20 and 23 dependent thereon include the elected sequence. Applicants also added new claims 30-32 directed to SEQ ID NOS: 29, 31 and 32.

In the Final Office action mailed November 21, 2005, the examiner again asserted that claims 10, 15, 16, 20, 23, 25-28 and new claims 30-32 were withdrawn from further consideration. The examiner stated that new claims 30-32 were withdrawn because they were not in the original claims and that this was a case of election by original presentation since SEQ ID NOS: 29, 31 and 32 were originally non-elected. The examiner addressed applicants' argument that this was

not an election of species but a restriction limited to the SEQ ID NO: 30 and that applicants never challenged it in the previous Office actions.

This petition to review the finality of the restriction requirement and Finality of the Office action mailed September 21, 2005, was filed on November 15, 2005.

DISCUSSION

The application, file history and petition have been considered carefully. In the Petition, Applicants request consideration of claims 10,15, 16, 25 and 26 along with the other claims currently being examined.

Applicants also petition to withdraw the Final Office action of September 21, 2005 and to receive an Office action on the merits of claims 10, 15, 16, 25 and 26 along with the other claims being examined on their merits in this application. Applicants argue that under the Administrative Act they should have the other claims examined along with the claims of Group II examined. Applicants argue that it is a fact that the peptide having the amino acid sequence of SEQ ID NO: 30 which the examiner acknowledges is the elected sequence is a peptide which is a portion of an endostatin protein that has a length (13 amino acids) within the claim 1 range of 7 to 20 amino acids. The examiner is examining claim 1 ("A peptide comprising a portion of an endostatin protein, wherein said peptide is of length from 7-20 amino acids long") and claim 7 ("The peptide of claim 1 that has a length of 9 to 20 amino acids"). Applicant further argues that those peptides have lengths respectively of 13, 14, and 16 amino acids. It is not clear why the examiner is refusing to examine claim 25. If claim 23 were to be stated in the manner of claim 7, claim 25 would read "The peptide of claim 1 that has a length of 13 amino acids". Applicants then refer to 37 CFR 1.142 to support that claim 10 is not independent from claim 1 and that claim 10 expressly depends from claim 1. Applicants ask if the examiner were to find a reference which disclosed the subject matter of claim 25, would the examiner allow claim 1 as being drawn to subject matter which is patentably distinct from the subject matter disclosed in claim 25? Applicants therefore, conclude, that the restriction is improper.

Applicants are correct that the examiner has failed to apply a proper standard for restriction in this case. The examiner has failed to establish why claims 10, 15, 16, 25 and 26 were withdrawn from consideration. The reason for withdrawing these claims is incorrect. The claims do encompass applicants' claimed SEQ ID NO: 30 as argued. The examiner improperly omitted these claims from examination as they clearly encompass the elected sequence. The examiner clearly considered SEQ ID NO: 30 and it is not clear why the examiner excluded these claims.

The examiner was correct in stating that this is a restriction requirement for the sequence and **not** an election of species as applicant argued and the examiner was correct is stating that applicant never challenged the restriction to SEQ ID NO: 30.

Nevertheless, the applicant is still correct in that the withdrawn claims 10, 15, 16, 25 and 26 do contain the SEQ ID NO: 30 and thus should and will be re-joined with the elected group II claims.

For these reasons, claims 10, 15, 16, 25 and 26 will be rejoined with claims 1, 2, 6-8, 13, 14, 19, 22 and 29. The previous Office action is withdrawn as incomplete and a new office action considering claims 1, 2, 6-8, 10, 13-16, 19, 22, 25, 26, and 29 will be issued.

DECISION

The petition under 37 CFR 1.144 and 1.181 is **GRANTED** for the reasons set forth above.

Claims 10, 15, 16, 25 and 26 are rejoined with claims 1, 2, 6-8, 13, 14, 19, 22 and 29. The application will be forwarded to the examiner for preparation of a new Office action consistent with this petition decision. Applicants need not reply to the Office action mailed September 21, 2005, which has been withdrawn.

Should there be any questions regarding this decision, please contact Special Program Examiner William Dixon, by mail addressed to Director, Technology Center 1600, PO BOX 1450, ALEXANDRIA, VA 22313-1450, or by telephone at (571) 272-0519 or by Official Fax at 571-273-8300

Bruce M. Kisliuk
Director, Technology Center 1600

UNITED STATES PATENT AND TRADEMARK OFFICE

COMMISSIONER FOR PATENTS
UNITED STATES PATENT AND TRADEMARK OFFICE
P.O. BOX 1450
ALEXANDRIA, VA 22313-1450
www.uspto.gov

Paper No.

Glenn Patent Group
3475 Edison Way
Suite L
Menlo Park, CA 94025

COPY MAILED

MAY 1 1 2004

OFFICE OF PETITIONS

In re Application of :
Linda Hockersmith :
Application No. 09/766,427 : ON PETITION
Filed: January 18, 2001 :
Attorney Docket No. IMET0050 :

This is a decision on the petition under 37 CFR 1.137(b), filed March 9, 2004, to revive the above-identified application.

The petition is **GRANTED**.

This application is being revived solely for purposes of continuity. As continuity has been established by this decision, the application is again abandoned in favor of continuing application No. 10/746,352.

Pursuant to 37 CFR 1.136, an extension of time must be filed prior to the expiration of the maximum period obtainable for reply to avoid abandonment. Since the extension of time fee submitted with the present petition was subsequent to the six-month statutory period for reply, it is unnecessary and the fee has not been charged to petitioner's deposit account.

Telephone inquiries concerning this decision should be directed to the undersigned at (703) 306-3475.

The application file is being forwarded to the Files Repository.

Marianne E. Morgan
Petitions Examiner
Office of Petitions
Office of the Deputy Commissioner
for Patent Examination Policy

UNITED STATES PATENT AND TRADEMARK OFFICE

DIRECTOR FOR PATENTS
UNITED STATES PATENT AND TRADEMARK OFFICE
P.O. BOX 1450
ALEXANDRIA, VA 22313-1450
www.uspto.gov

GLENN PATENT GROUP
3475 EDISON WAY, SUITE L
MENLO PARK CA 94025

COPY MAILED

APR 2 2 2008

OFFICE OF PETITIONS

In re Application of	:	
Linda Hockersmith	:	
Application No. 09/766,427	:	ON PETITION
Filed: January 18, 2001	:	
Attorney Docket No. IMET0050	:	

This is a decision on the petition, filed January 9, 2008, to revive the above-identified application under the provisions of 37 CFR 1.137(b).

The petition is DISMISSED.

Any request for reconsideration of this decision must be submitted within TWO (2) MONTHS from the mail date of this decision. Extensions of time under 37 CFR 1.136(a) are permitted. The reconsideration request should include a cover letter entitled "Renewed Petition under 37 CFR 1.137(b)." This is **not** a final agency action within the meaning of 5 U.S.C. § 704.

This application initially became abandoned for a failure to reply within the meaning of 35 USC 133 to the final Office action of July 31, 2003, which set a shortened period for reply of three months. As no reply was filed, and no extensions of time were obtained, the application became abandoned at midnight October 31, 2003. On March 9, 2004, a petition was filed to revive the application under the provisions of 37 CFR 1.137(b) for the purpose of continuity only with Application No. 10/746,352 filed December 23, 2003. The petition was granted in a decision mailed May 11, 2004 and the application was again abandoned in favor of the continuing application. It is noted that a Status Letter was filed on October 17, 2006, followed by the present petition on January 1, 2008.

A grantable petition under 37 CFR 1.137(b) must be accompanied by: (1) the required reply, unless previously filed; (2) the petition fee as set forth in 37 CFR 1.17(m); (3) a statement that the entire delay in filing the required reply from the due date for the reply until the filing of a grantable petition pursuant to 37 CFR 1.137(b) was unintentional; and (4) any terminal disclaimer (and fee as set forth in 37 CFR 1.20(d)) required by 37 CFR 1.137(d). Where there is a question as to whether either the abandonment or the delay in filing a petition under 37 CFR 1.137 was unintentional, the Director may require additional information. See MPEP 711.03(c)(II)(C) and (D). The instant petition lacks item 3.

In this regard petitioner has not met his burden of proof to establish to the satisfaction of the Director that the entire delay in prosecution was herein unintentional within the meaning of 35 U.S.C. 41(a)(7) and 37 CFR 1.137(b). In fact, the showing of record is that applicant deliberately withheld a reply to the final Office action of July 31, 2003 in this application, since the original petition to revive was for copendency only with the continuing application. An intentional course of action is not rendered unintentional when, upon reconsideration, the applicant changes his or her mind as to the course of action that should have been taken, and now seeks, on petition to remit the deliberately withheld reply. Maldague, at 1478; Lawman, 73 USPQ2d at 1637-38; Lumenyte Int'l Corp. v. Cable Lite Corp., 1996 U.S. App. LEXlS 16400, 1996 WL 383927 (Fed. Cir. July 9, 1996) (unpublished).

Any renewed petition may be addressed as follows:

By Mail: Mail Stop PETITION
Commissioner for Patents
P. O. Box 1450
Alexandria, VA 22313-1450

By hand: U. S. Patent and Trademark Office
Customer Service Window, Mail Stop Petitions
Randolph Building
401 Dulany Street
Alexandria, VA 22314

The centralized facsimile number is **(571) 273-8300.**

Correspondence regarding this decision may also be filed through the electronic filing system of the USPTO.

Telephone inquiries concerning this decision should be directed to the undersigned at (571) 272-3204.

Sherry D. Brinkley
Petitions Examiner
Office of Petitions

UNITED STATES PATENT AND TRADEMARK OFFICE

Commissioner for Patents
United States Patent and Trademark Office
P.O. Box 1450
Alexandria, VA 22313-1450
www.uspto.gov

STEPHEN E. JOHNSON, ESQ.
ROHM AND HAAS COMPANY
100 INDEPENDENCE MALL WEST
PHILADELPHIA PA 19106-2399

COPY MAILED

JAN 26 2005

OFFICE OF PETITIONS

ON PETITION

In re Application of :
John M. Friel et al :
Application No. 09/766,435 :
Filed: January 19, 2001 :
Attorney Docket No. 6258-003 :

This is a decision on the petition, filed January 25, 2005, under 37 CFR 1.313(c)(2) to withdraw the above-identified application from issue after payment of the issue fee.

The petition is **GRANTED.**

The above-identified application is withdrawn from issue for consideration of a submission under 37 CFR 1.114 (request for continued examination). See 37 CFR 1.313(c)(2).

Petitioner is advised that the issue fee paid on August 23, 2004 in the above-identified application cannot be refunded. If, however, the above-identified application is again allowed, petitioner may request that it be applied towards the issue fee required by the new Notice of Allowance.[1]

Telephone inquiries should be directed to the undersigned at (571) 272-3208.

The examiner of Technology Center AU 3627 will consider the request for continued examination under 37 CFR 1.114.

Karen Creasy

Karen Creasy
Petitions Examiner
Office of Petitions
Office of the Deputy Commissioner
for Patent Examination Policy

---

[1] The request to apply the issue fee to the new Notice may be satisfied by completing and returning the new Issue Fee Transmittal Form PTOL-85(b), which includes the following language thereon: "Commissioner for Patents is requested to apply the Issue Fee and Publication Fee (if any) or re-apply any previously paid issue fee to the application identified above." Petitioner is advised that, whether a fee is indicated as being due or not, the Issue Fee Transmittal Form **must** be completed and timely submitted to avoid abandonment. Note the language in bold text on the first page of the Notice of Allowance and Fee(s) Due (PTOL-85).

UNITED STATES PATENT AND TRADEMARK OFFICE

COMMISSIONER FOR PATENTS
UNITED STATES PATENT AND TRADEMARK OFFICE
P.O. BOX 1450
ALEXANDRIA, VA 22313-1450
www.uspto.gov

THOMAS, KAYDEN, HORSTEMEYER & RISLEY, LLP
100 GALLERIA PARKWAY, NW
STE 1750
ATLANTA, GA 30339-5948

COPY MAILED

MAR 23 2007

OFFICE OF PETITIONS

In re Application of :
KIM et al :
Application No.: 09/766,473 : DECISION ON PETITION
Filing Date: January 19, 2001 : UNDER 37 CFR 1.78(a)(3)
Attorney Docket No.: MPAT.182C1 (050906-1050) :

This is a decision on the petition under 37 CFR 1.78(a)(3), filed November 30, 2006, to accept an unintentionally delayed claim under 35 U.S.C. 120 for the benefit of priority to the prior-filed nonprovisional application set forth in the amendment filed concurrently with the instant petition.

The petition is **GRANTED**.

The present nonprovisional application was filed after November 29, 2000, and the claim herein for the benefit of priority to the prior-filed nonprovisional applications is submitted after expiration of the period specified in 37 CFR 1.78(a)(2)(ii). Therefore, this is a proper petition under 37 CFR 1.78(a)(3).

A petition for acceptance of a late claim for priority under 37 CFR 1.78(a)(3) is only applicable to those applications filed on or after November 29, 2000. Further, the petition is appropriate only after the expiration of the period specified in 37 CFR 1.78(a)(2)(ii). In addition, the petition under 37 CFR 1.78(a)(3) must be accompanied by:

(1) the reference required by 35 U.S.C. 120 and 37 CFR 1.78(a)(2)(i) of the prior-filed application, unless previously submitted;
(2) the surcharge set forth in 37 CFR 1.17(t); and
(3) a statement that the entire delay between the date the claim was due under 37 CFR 1.78(a)(2)(ii) and the date the claim was filed was unintentional. The Director may require additional information where there is a question whether the delay was unintentional.

The petition complies with the requirements for a grantable petition under 37 CFR 1.78(a)(3) in that (1) a reference to the prior-filed nonprovisional application has been included in an

amendment to the first sentence of the specification following the title, as provided by 37 CFR 1.78(a)(2)(iii); (2) the surcharge fee required by 37 CFR 1.17(t) has been submitted; and (3) the petition contains a proper statement of unintentional delay. Accordingly, having found that the instant petition for acceptance of an unintentionally delayed claim for the benefit of priority under 35 U.S.C. 120 to the prior-filed nonprovisional application satisfies the conditions of 37 CFR 1.78(a)(3), the petition is granted.

The granting of the petition to accept the delayed benefit claim to the prior-filed application under 37 CFR 1.78(a)(3) should not be construed as meaning that this application is entitled to the benefit of the prior-filed application. In order for this application to be entitled to the benefit of the prior-filed application, all other requirements under 35 U.S.C. 120 and 37 CFR 1.78(a)(1) and (a)(2) must be met. Similarly, the fact that the corrected Filing Receipt accompanying this decision on petition includes the prior-filed application should not be construed as meaning that applicant is entitled to the claim for benefit of priority to the prior-filed application noted thereon. Accordingly, the examiner will, in due course, consider this benefit claim and determine whether this application is entitled to the benefit of the earlier filing date.

A corrected Filing Receipt, which includes the priority claim to the prior-filed nonprovisional application, accompanies this decision on petition.

Any inquiries concerning this decision may be directed to Bryan Lin at (571)272-3303. All other inquiries concerning either the examination procedures or status of the application should be directed to the Technology Center.

This matter is being referred to Technology Center Art Unit 2142 for appropriate action on the papers filed November 30, 2006, including consideration by the examiner of applicant's entitlement to claim benefit of priority under 35 U.S.C. 120 to the prior-filed nonprovisional application.

Bryan Lin

Bryan Lin
Legal Examiner
Office of PCT Legal Administration

Boris Milef
Legal Examiner
Office of Petitions

ATTACHMENT: Corrected Filing Receipt

UNITED STATES PATENT AND TRADEMARK OFFICE

UNITED STATES DEPARTMENT OF COMMERCE
United States Patent and Trademark Office
Address: COMMISSIONER FOR PATENTS
P.O. Box 1450
Alexandria, Virginia 22313-1450
www.uspto.gov

APPL NO.	FILING OR 371(c) DATE	ART UNIT	FIL FEE REC'D	ATTY.DOCKET NO	TOT CLMS	IND CLMS
09/766,473	01/19/2001	2142	1200	MPAT.182C1	11	5

CONFIRMATION NO. 1039

CORRECTED FILING RECEIPT

OC000000023173859

24504
THOMAS, KAYDEN, HORSTEMEYER & RISLEY, LLP
100 GALLERIA PARKWAY, NW
STE 1750
ATLANTA, GA 30339-5948

Date Mailed: 03/29/2007

Receipt is acknowledged of this regular Patent Application. It will be considered in its order and you will be notified as to the results of the examination. Be sure to provide the U.S. APPLICATION NUMBER, FILING DATE, NAME OF APPLICANT, and TITLE OF INVENTION when inquiring about this application. Fees transmitted by check or draft are subject to collection. Please verify the accuracy of the data presented on this receipt. **If an error is noted on this Filing Receipt, please mail to the Commissioner for Patents P.O. Box 1450 Alexandria Va 22313-1450. Please provide a copy of this Filing Receipt with the changes noted thereon. If you received a "Notice to File Missing Parts" for this application, please submit any corrections to this Filing Receipt with your reply to the Notice. When the USPTO processes the reply to the Notice, the USPTO will generate another Filing Receipt incorporating the requested corrections (if appropriate).**

Applicant(s)

Steven D. Kim, Agaura Hills, CA;
Lior Elazary, Agoura, CA;

Power of Attorney: The patent practitioners associated with Customer Number **24504**.

Domestic Priority data as claimed by applicant

This application is a CON of 09/565,270 05/05/2000 PAT 6,842,769

Foreign Applications

If Required, Foreign Filing License Granted: 03/06/2001

The country code and number of your priority application, to be used for filing abroad under the Paris Convention, is US09/766,473

Projected Publication Date: Not Applicable

Non-Publication Request: No

Early Publication Request: No

Title

System and method for managing server configurations

Preliminary Class

709

PROTECTING YOUR INVENTION OUTSIDE THE UNITED STATES

Since the rights granted by a U.S. patent extend only throughout the territory of the United States and have no effect in a foreign country, an inventor who wishes patent protection in another country must apply for a patent in a specific country or in regional patent offices. Applicants may wish to consider the filing of an international application under the Patent Cooperation Treaty (PCT). An international (PCT) application generally has the same effect as a regular national patent application in each PCT-member country. The PCT process **simplifies** the filing of patent applications on the same invention in member countries, but **does not result** in a grant of "an international patent" and does not eliminate the need of applicants to file additional documents and fees in countries where patent protection is desired.

Almost every country has its own patent law, and a person desiring a patent in a particular country must make an application for patent in that country in accordance with its particular laws. Since the laws of many countries differ in various respects from the patent law of the United States, applicants are advised to seek guidance from specific foreign countries to ensure that patent rights are not lost prematurely.

Applicants also are advised that in the case of inventions made in the United States, the Director of the USPTO must issue a license before applicants can apply for a patent in a foreign country. The filing of a U.S. patent application serves as a request for a foreign filing license. The application's filing receipt contains further information and guidance as to the status of applicant's license for foreign filing.

Applicants may wish to consult the USPTO booklet, "General Information Concerning Patents" (specifically, the section entitled "Treaties and Foreign Patents") for more information on timeframes and deadlines for filing foreign patent applications. The guide is available either by contacting the USPTO Contact Center at 800-786-9199, or it can be viewed on the USPTO website at http://www.uspto.gov/web/offices/pac/doc/general/index.html.

For information on preventing theft of your intellectual property (patents, trademarks and copyrights), you may wish to consult the U.S. Government website, http://www.stopfakes.gov. Part of a Department of Commerce initiative, this website includes self-help "toolkits" giving innovators guidance on how to protect intellectual property in specific countries such as China, Korea and Mexico. For questions regarding patent enforcement issues, applicants may call the U.S. Government hotline at 1-866-999-HALT (1-866-999-4158).

LICENSE FOR FOREIGN FILING UNDER
Title 35, United States Code, Section 184
Title 37, Code of Federal Regulations, 5.11 & 5.15

GRANTED

The applicant has been granted a license under 35 U.S.C. 184, if the phrase "IF REQUIRED, FOREIGN FILING LICENSE GRANTED" followed by a date appears on this form. Such licenses are issued in all applications where the conditions for issuance of a license have been met, regardless of whether or not a license may be required as set forth in 37 CFR 5.15. The scope and limitations of this license are set forth in 37 CFR 5.15(a) unless an earlier license has been issued under 37 CFR 5.15(b). The license is subject to revocation upon written notification. The date indicated is the effective date of the license, unless an earlier license of similar scope has been granted under 37 CFR 5.13 or 5.14.

This license is to be retained by the licensee and may be used at any time on or after the effective date thereof

unless it is revoked. This license is automatically transferred to any related applications(s) filed under 37 CFR 1.53(d). This license is not retroactive.

The grant of a license does not in any way lessen the responsibility of a licensee for the security of the subject matter as imposed by any Government contract or the provisions of existing laws relating to espionage and the national security or the export of technical data. Licensees should apprise themselves of current regulations especially with respect to certain countries, of other agencies, particularly the Office of Defense Trade Controls, Department of State (with respect to Arms, Munitions and Implements of War (22 CFR 121-128)); the Bureau of Industry and Security, Department of Commerce (15 CFR parts 730-774); the Office of Foreign Assets Control, Department of Treasury (31 CFR Parts 500+) and the Department of Energy.

NOT GRANTED

No license under 35 U.S.C. 184 has been granted at this time, if the phrase "IF REQUIRED, FOREIGN FILING LICENSE GRANTED" DOES NOT appear on this form. Applicant may still petition for a license under 37 CFR 5.12, if a license is desired before the expiration of 6 months from the filing date of the application. If 6 months has lapsed from the filing date of this application and the licensee has not received any indication of a secrecy order under 35 U.S.C. 181, the licensee may foreign file the application pursuant to 37 CFR 5.15(b).

UNITED STATES PATENT AND TRADEMARK OFFICE

COMMISSIONER FOR PATENTS
UNITED STATES PATENT AND TRADEMARK OFFICE
WASHINGTON, D.C. 20231
www.uspto.gov

Paper No. 9

Aaron L Patton
Suite 200
4401 Atlantic Avenue
Long Beach CA 90807

COPY MAILED

MAR 0 7 2003

OFFICE OF PETITIONS

In re Application of
Arturo Meza
Application No. 09/766,475
Filed: January 19, 2001
Attorney Docket No.

ON PETITION

This is a decision on the petition under 37 CFR § 1.137(b), filed March 6, 2003, to revive the above-identified application.

The petition is **granted**.

This application became abandoned for failure to respond in an appropriate and timely manner to the " Notice to File Corrected Application Papers" (the "Notice") mailed March 9, 2001, which set forth a two (2) month period for reply. The Notice required that substitute drawings being filed. No response was received within the allowable period and the application became abandoned on May 10, 2001. A Notice of Abandonment was mailed on September 3, 2002.

The substitute drawings filed March 6, 2003, are noted and made of record.

The application is being forward to the Office of Initial Patent Examination for further processing.

Telephone inquiries concerning this matter may be directed to the undersigned at (703) 305-0010.

Kenya A. McLaughlin

Kenya A. McLaughlin
Petitions Attorney
Office of Petitions

UNITED STATES PATENT AND TRADEMARK OFFICE

Commissioner for Patents
United States Patent and Trademark Office
P.O. Box 1450
Alexandria, VA 22313-1450
www.uspto.gov

032006

MAR 3 1 2006

Mark E. Courtney
Texas Instrument Incorporated
P.O. Box 655474, MS 3999
Dallas, Texas 75265

In re Application of Kian Teng Eng et al. Application No. 09/766,477 Filed: January 19, 2001 Attorney Docket No. TI-22944.2	: : : : :	DECISION ON PETITION UNDER 37 C.F.R. § 1.181

This is a decision on the petition filed June 27, 2005, under 37 C.F.R. § 1.181, requesting the Commissioner for Patents to compel the examiner to consider the request to declare an interference previously filed and declare an interference. The petition is before the Group Director of Technology Center 2800 for consideration.

The petition is DENIED.

This application was filed on January 19, 2001 and claims benefit under 35 USC 120 to application No. 09/478,917, filed on January 6, 2000, and issued as US patent No. 6,420,782 on July 16, 2002. This application was filed with claims 1-20 and 22-28, claim 21 was not presented. Pursuant to 37 CFR 1.126, claims 22-28 were renumbered as claims 21-27, respectively. A preliminary amendment was submitted on filing of the application to cancel claims 22-27, and to amend the specification to claim "priority under 35 USC § 119(e)(1) of Parent Application number 09/115,565 filed 7/14/1998 and Divisional Application number 09/478,917 filed 1/6/2000." Another preliminary amendment was filed on March 12, 2001, to reinstate claims 22-27 and cancel claims 11-20.

A first Office action was issued on March 13, 2002, wherein claims 1-10, directed to an integrated circuit package, were rejected under the judicially created doctrine of obviousness double patenting, under 35 USC 102 or 35 USC 103. In response to the first Office action, applicant argued that claims 1-10 have been canceled by preliminary amendment along with claims 11-20. A second Office action was issued on August 13, 2002, wherein it was indicated that claims 1-10 and 21 were actually pending and a restriction requirement was made between claims 1-10 directed to a device and claim 21 directed to a process of manufacture which was deemed to be patentably distinct from the device claims. An election was made on August 13, 2002 to prosecute claim 21. On February 11, 2003, an Office action was issued and elected claim 21 was rejected as unpatentable under 35 USC 102(e) and non-elected claims 1-10 were

withdrawn from consideration. In response, an amendment was filed on March 14, 2003, to cancel claims 1-20 and amend claim 21 resulting in claims 21-27 being pending for consideration. A supplemental response was filed to cancel claims 1-10 and re-present claims 21-27. A non-final Office action was issued on August 18, 2003 rejecting claims 21-27 as unpatentable over various grounds. An amendment was filed on September 22, 2003 amending claims 21 and 22 and presenting new claim 28. A Final Office action was issued on January 15, 2004, to finally reject claims 21-28 as being unpatentable over the prior art.

An amendment after final rejection was filed on March 3, 2004, to amend claims 21, 22 and 27, cancel claim 26, and add claims 29-35. Claims 29-35 were claims 1-6 and 9, respectively, of US patent No. 6,418,033 issued to Rinne on July 9, 2002, that were copied to provoke an interference. The effective filing date of the Rinne patent is November 16, 2000. A further amendment was filed on March 8, 2004 to add new claim 36 that was indicated as being a copy of claim 58 of the Rinne patent. No action was issued by the Office regarding the status of the two amendments filed after final rejection. A Request for Continued Examination (RCE) was filed on April 19, 2004 along with the request for entry of the amendments filed after final rejection.

On November 2, 2004, a non-final Office action was issued wherein claims 29-36 were withdrawn from consideration because they were directed to product that is deemed to be patentably distinct from the process claimed in claims 21-25, 27 and 28 and examined prior to the filing of the RCE. The invention directed toward the process was held to have been constructively elected by original presentation claims for prosecution on the merits and claims to the product were withdrawn from consideration as being directed to a non-elected invention. Elected claims 21-25, 27 and 28 were rejected as being unpatentable under 35 USC 102(b). The Office action indicated that an interference proceeding could not properly be instituted at that time.

MPEP 2303 states as follows:

"37 CFR 41.102. Completion of examination.
Before a contested case is initiated, except as the Board may otherwise authorize, for each involved
application and patent:
(a) Examination or reexamination must be completed, and
(b) There must be at least one claim that:
(1) Is patentable but for a judgment in the contested case, and
(2) Would be involved in the contested case.

An interference should rarely be suggested until examination is completed on all other issues. Each pending claim must be allowed, finally rejected, or canceled. Any appeal from a final rejection must be completed, including any judicial review. Any petition must be decided.
Example 1
An applicant has one allowed claim directed to invention A, which is the same invention of another inventor within the meaning of 35 U.S.C. 102(g)(1), and has rejected claims directed to different invention B. If the rejection is contested, the

application is not yet ready for an interference. Restriction of the application to invention A, followed by cancellation of the claims directed to invention B would remove this impediment to declaring an interference.

.....

Ordinarily restrictions are limited to situations where (A) the inventions are independent or distinct as claimed, and (B) there would be a serious burden on the examiner if restriction is not required (see MPEP § 803). Potential interferences present an additional situation in which a restriction requirement may be appropriate. Specifically, restriction of interfering claims from non-interfering claims, or from unpatentable claims whose further prosecution would unduly delay initiation of an interference, can be an appropriate use of restrictions under 35 U.S.C. 121. An Interference Practice Specialist (IPS) should be consulted in making and resolving restrictions under this heading. An applicant may, of course, also choose to cancel claims and refile them in a continuation application without waiting for the restriction requirement."

As indicated in the above-quoted passages of the MPEP, an interference may not be suggested until examination is completed. In this instance, petitioner elected to have examined the claims directed to a process instead of the claims directed to product which include the copied claims for interference. The elected process claims have not been determined to be patentable over the prior art by the examiner and the non-elected product claims have not been examined. Accordingly, examination of the claims in this application is not completed.

Because the examination of the claims in the instant application is not complete, a suggestion of interference to the Board of Patent Appeals and Interference (BPAI) is premature at this time. As such, the petition to compel the examiner to suggest an interference to the BPAI cannot be granted.

Petitioner may wish to consider presenting the copied claims in a continuing application for examination and consideration for interference.

The examiner will review the application and take appropriate action.

Any inquiry regarding this decision should be directed to Hien H. Phan, Special Program Examiner, at (571) 272-1606.

Sharon Gibson, Group Director
Technology Center 2800
Semiconductors, Electrical and Optical
Systems and Components

UNITED STATES PATENT AND TRADEMARK OFFICE

COMMISSIONER FOR PATENTS
UNITED STATES PATENT AND TRADEMARK OFFICE
P.O. BOX 1450
ALEXANDRIA, VA 22313-1450
WWW.USPTO.GOV

Paper No. 13

CHARLES J PRESCOTT
CHARLES J PRESCOTT PA
2033 WOOD STREET
SUITE 115
SARASOTA FL 34237-7926

COPY MAILED

MAY 05 2003

OFFICE OF PETITIONS

In re Application of
James A. Patterson
Application No. 09/766,513
Filed: January 19, 2001
Attorney Docket No. P-1754

ON PETITION

This is a decision on the petition under 37 CFR 1.137(b), filed December 26, 2002 (Certificate of Mailing dated December 19, 2002).

The petition under 37 CFR 1.137(b) is **GRANTED**.

The above-identified application became abandoned for failure to timely file a proper reply to the non-final Office action mailed August 1, 2001, which set a shortened statutory period for reply of three months. Applicant filed an amendment on February 20, 2002, made timely by obtaining a three month extension of time and including a Certificate of Mailing dated January 24, 2002. However, a Notice of Non-Compliant Amendment was mailed on March 15, 2002. This Notice gave applicant a one month period to reply. Applicant filed another amendment on April 15, 2002. However, a second Notice of Non-Compliant Amendment was mailed on August 14, 2002. This Notice did not give applicant additional time to reply. Accordingly, the above-identified application became abandoned on April 16, 2002. A Notice of Abandonment was mailed on November 6, 2002.

Petitioner has met the requirements to revive the above-identified application, pursuant to 37 CFR 1.137(b). Petitioner filed an amendment in response to the August 1, 2001 Office action, paid the petition fee and made the proper statement of unintentional delay.

The application file is being forwarded to Technology Center 1600 for consideration of petitioner's amendment, filed December 26, 2002.

Telephone inquiries regarding this decision should be directed to the undersigned at (703) 305-0272.

Cliff Congo
Petitions Attorney
Office of Petitions

UNITED STATES PATENT AND TRADEMARK OFFICE

COMMISSIONER FOR PATENTS
UNITED STATES PATENT AND TRADEMARK OFFICE
P.O. BOX 1450
ALEXANDRIA, VA 22313-1450
www.uspto.gov

Paper No. 9

Attn: James M. Stipek, Esq.
Lathrop & Gage L.C.
Suite 2800
2345 Grand Boulevard
Kansas City MO 64108

COPY MAILED

OCT 3 1 2003

OFFICE OF PETITIONS

In re Application of
Charles A. Jennings
Application No. 09/766,519
Filed: January 19, 2001
Attorney Docket No. 389175

DECISION GRANTING PETITION
UNDER 37 CFR 1.137(b)

This is a decision on the petition, filed October 16, 2003, which is being treated as a petition under 37 CFR 1.137(b) to revive the instant nonprovisional application for failure to timely notify the U.S. Patent and Trademark (USPTO) of the filing of an application in a foreign country, or under a multinational treaty that requires publication of applications eighteen months after filing. *See* 37 CFR 1.137(f).

The petition is **GRANTED**.

Petitioner states that the instant nonprovisional application is the subject of an application filed in an eighteen month publication country on January 18, 2002. However, the USPTO was unintentionally not notified of this filing within 45 days subsequent to the filing of the subject application in an eighteen month publication country.

In view of the above, this application became abandoned pursuant to 35 U.S.C. § 122(b)(2)(B)(iii) and 37 CFR 1.213(c) for failure to timely notify the Office of the filing of an application in a foreign country or under a multilateral international agreement that requires publication of applications 18 months after filing.

A petition to revive an application abandoned pursuant to 35 U.S.C. 122(b)(2)(B)(iii) for failure to notify the USPTO of a foreign filing must be accompanied by:

(1) the required reply which is met by the notification of such filing in a foreign country or under a multinational treaty;
(2) the petition fee as set forth in 37 CFR 1.17(m); and
(3) a statement that the entire delay in filing the required reply from the due date of the reply until the filing of a grantable petition was unintentional.

The instant petition has been found to be in compliance with 37 CFR 1.137(b). Accordingly, the failure to timely notify the USPTO of a foreign or international filing within 45 days after the date of filing of such foreign or international application as provided by 35 U.S.C. § 122(b)(2)(B)(iii) and 37 CFR 1.213(c) is accepted as having been unintentionally delayed.

Any inquiries concerning this decision may be directed to the undersigned at (703) 305-9220.

This application is being forwarded to Technology Center Art Unit 2143 for examination in due course.

Sherry D. Brinkley
Petitions Examiner
Office of Petitions
Office of the Deputy Commissioner
for Patent Examination Policy

UNITED STATES PATENT AND TRADEMARK OFFICE

Commissioner for Patents
United States Patent and Trademark Office
P.O. Box 1450
Alexandria, VA 22313-1450
www.uspto.gov

HAMILTON, BROOK, SMITH & REYNOLDS, P.C.
530 VIRGINIA ROAD
P.O. BOX 9133
CONCORD MA 01742-9133

COPY MAILED

MAY 23 2008

OFFICE OF PETITIONS

In re Patent No. 6,991,791	:	
Application No. 09/766,535	:	
Filed: January 18, 2001	:	ON PETITION
Issued: January 31, 2006	:	
Attorney Docket No. 0975.1005-010	:	

This is a decision on the petition filed January 28, 2008, which is being treated as a request under 37 CFR 3.81(b)[1] to correct the name of the assignee on the front page of the above-identified patent by way of a Certificate of Correction.

The request is **GRANTED**.

The patent file is being forwarded to the Certificates of Correction Branch for issuance of the requested Certificate of Correction.

Telephone inquiries concerning this decision may be directed to the undersigned at (571) 272-3206. Inquiries regarding the issuance of a certificate of correction should be directed to the Certificate of Correction Branch at (571) 272-4200.

Liana Walsh
Petitions Examiner
Office of Petitions

[1] *See* MPEP 1309, subsection II; and Official Gazette of June 22, 2004.

UNITED STATES PATENT AND TRADEMARK OFFICE

Commissioner for Patents
United States Patent and Trademark Office
P. O. Box 1450
Alexandria, VA 22313-1450
www.uspto.gov

Paper No. 11

FISH & NEAVE
1251 AVENUE OF THE AMERICAS
50TH FLOOR
NEW YORK NY 10020-1105

COPY MAILED

AUG 21 2003

OFFICE OF PETITIONS

In re Application of
MASOOD GARAHI
Application No. 09/766,551
Filed: January 19, 2001
Attorney Docket No. ODS-19

DECISION GRANTING PETITION
UNDER 37 CFR 1.137(b)

This is a decision on the petition, filed April 8, 2003, which is being treated as a petition under 37 CFR 1.137(b) to revive the present nonprovisional application for failure to timely notify the U.S. Patent and Trademark (USPTO) of the filing of an application in a foreign country, or under a multinational treaty that requires publication of applications eighteen months after filing. *See* 37 CFR 1.137(f).

The petition is **GRANTED**.

Petitioner states that the present nonprovisional application is the subject of an application filed in an 18 month publication country on January 31, 2001. However, the USPTO was unintentionally not notified of this filing within 45 days subsequent to the filing of the subject application in an eighteen month publication country.

In view of the above, this application became abandoned pursuant to 35 U.S.C. 122(b)(2)(B)(iii) and 37 CFR 1.213(c) for failure to timely notify the Office of the filing of an application in a foreign country or under a multilateral international agreement that requires publication of applications 18 months after filing.

A petition to revive an application abandoned pursuant to 35 U.S.C. 122(b)(2)(B)(iii) for failure to notify the USPTO of a foreign filing must be accompanied by:

(1) the required reply which is met by the notification of such filing in a foreign country or under a multinational treaty;

(2) the petition fee as set forth in 37 CFR 1.17(m); and

(3) a statement that the entire delay in filing the required reply from the due date of the reply until the filing of a grantable petition was unintentional.

The present petition has been found to be in compliance with 37 CFR 1.137(b). Accordingly, the failure to timely notify the USPTO of a foreign or international filing within 45 days after the date of filing of such foreign or international application as provided by 35 U.S.C. 122(b)(2)(B)(iii) and 37 CFR 1.213(c) is accepted as having been unintentionally delayed.

The previous Request and Certification under 35 U.S.C. 122(b)(2)(B)(i) has been rescinded. Further, the application published on October 25, 2001.

This application is being forwarded to Technology Center Art Unit 2686 for examination in due course.

Any inquiries concerning this decision may be directed to the undersigned at (703) 306-5589.

Christina Tartera Donnell

Christina Tartera Donnell
Senior Petitions Attorney
Office of Petitions

UNITED STATES PATENT AND TRADEMARK OFFICE

UNITED STATES DEPARTMENT OF COMMERCE
United States Patent and Trademark Office
Address: COMMISSIONER FOR PATENTS
P.O. Box 1450
Alexandria, Virginia 22313-1450
www.uspto.gov

QUALCOMM INCORPORATED
5775 MOREHOUSE DR.
SAN DIEGO, CA 92121

Mail Date: 04/20/2010

Applicant	: Quaeed Motiwala	: DECISION ON REQUEST FOR
Patent Number	: 7590164	: RECALCULATION of PATENT
Issue Date	: 09/15/2009	: TERM ADJUSTMENT IN VIEW
Appliction No	: 09/766,558	: OF WYETH AND NOTICE OF INTENT TO
Filed	: 01/19/2001	: ISSUE CERTIFICATE OF CORRECTION
		:

The Request for Recalculation is **GRANTED** to the extent indicated.

The patent term adjustment has been determined to be **1817** days. The USPTO will *sua sponte* issue a certificate of correction reflecting the amount of PTA days determined by the recalculation.

Prior to the issuance of the certificate of correction, the USPTO will afford patentee an opportunity to be heard and request reconsideration. Accordingly, patentee has **one month or thirty (30) days**, whichever is longer, to file a request for reconsideration of this patent term adjustment calculation. See 35 U.S.C. 154(b)(3)(B)(ii) and 37 CFR 1.322(a)(4). No extensions of time will be granted under 37 CFR 1.136.

Patentee should use document code PET.OP if electronically filing a request for reconsideration of this patent term adjustment calculation. The patentee must also include the information required by 37 CFR 1.705(b)(2) and the fee required by 37 CFR 1.18(e). If patentee does not file a timely request for reconsideration of this patent term adjustment calculation including the information required by 37 CFR 1.705(b)(2) and the fee required by 37 CFR 1.18(e), the USPTO will issue a certificate of correction reflecting the PTA determination noted above.

Patentee should be aware that in order to preserve the right to review in the United States District Court for the District of Columbia of the USPTO patent term adjustment determination, patentee must ensure that he or she also take the steps required under 35 U.S.C. 154(b)(4)(A) in a timely manner. Nothing in the request for recalculation should be construed as providing an alternative time frame for commencing a civil action under 35 U.S.C. 154(b)(4)(A).

Any questions concerning this decision should be directed to the Office of Patent Legal Administration at 571-272-7702.

UNITED STATES PATENT AND TRADEMARK OFFICE

COMMISSIONER FOR PATENTS
UNITED STATES PATENT AND TRADEMARK OFFICE
P.O. BOX 1450
ALEXANDRIA, VA 22313-1450
WWW.USPTO.GOV

Paper No.

ARMSTRONG, WESTERMAN, HATTORI,
MCLELAND & NAUGHTON
SUITE 1000
1725 K STREET, N.W.
WASHINGTON, DC 20006

COPY MAILED

JUL 0 8 2003

OFFICE OF PETITIONS

In re Application of
Munenori Watanabe
Application No. 09/766,584
Filed: January 23, 2001
Attorney Docket No. 010054

ON PETITION

This is a decision on the petition, filed January 27, 2003, under 37 CFR 1.313(c)(2) to withdraw the above-identified application from issue after payment of the issue fee.

The petition is **GRANTED**.

The above-identified application is withdrawn from issue for consideration of a submission under 37 CFR 1.114 (request for continued examination). See 37 CFR 1.313(c)(2).

Petitioner is advised that the issue fee paid on January 14, 2003 in the above-identified application cannot be refunded. If, however, the above-identified application is again allowed, petitioner may request that it be applied towards the issue fee required by the new Notice of Allowance.[1]

Telephone inquiries should be directed to the undersigned at (703) 305-8859.

After receipt of the file in the Office of Petitions, the application will be forwarded to Technology Center AU 2834 for processing of the request for continued examination under 37 CFR 1.114.

Karen Creasy
Petitions Examiner
Office of Petitions
Office of the Deputy Commissioner
for Patent Examination Policy

---

[1] The request to apply the issue fee to the new Notice may be satisfied by completing and returning the new Issue Fee Transmittal Form PTOL-85(b), which includes the following language thereon: "Commissioner for Patents is requested to apply the Issue Fee and Publication Fee (if any) or re-apply any previously paid issue fee to the application identified above." Petitioner is advised that, whether a fee is indicated as being due or not, the Issue Fee Transmittal Form **must** be completed and timely submitted to avoid abandonment. Note the language in bold text on the first page of the Notice of Allowance and Fee(s) Due (PTOL-85).

UNITED STATES PATENT AND TRADEMARK OFFICE

Commissioner for Patents
United States Patent and Trademark Office
P.O. Box 1450
Alexandria, VA 22313-1450
www.uspto.gov

MAILED

MAR 03 2005

Director's Office
Group 3700

Paper No. 13

In re Application of
Shigekazu Kato *et al*
Application No. 09/766,596
Filed: January 23, 2001
Attorney Docket No. 520.30414V22

: DECISION ON PETITION

This is a decision on the petition originally filed on September 12, 2003, as resubmitted by facsimile transmission on September 17, 2003 and on January 15, 2004, by which petitioners request withdrawal of the technically abandoned status of this application. Although a Notice of Abandonment has not been mailed, it appears that the application stands technically abandoned for failure to pay the issue fee that was due on or before March 18, 2002. The petition is considered pursuant to 37 CFR 1.181, and no fee is required.

The petition is granted.

Petitioners allege that this application is not abandoned because petitioners did not receive the Notice of Allowance dated September 22, 2003, or any of the attachments thereto. Therefore, the issue fee could not be paid.

A review of the record shows that as filed, this application contained a transmittal letter giving the correspondence address as Customer Number 020457. The record further shows that an incorrect correspondence address was entered because an incorrect Customer Number was entered. Therefore, the Notice of Allowance and Notice of Allowability mailed on December 18, 2001 was sent to the wrong correspondence address. It is not surprising that in view of that error, petitioners did not receive these papers, in accordance with petitioners' allegations.

As the record clearly shows that this application has become abandoned through error on the part of the Office, the Notice of Abandonment is hereby vacated, the holding of abandonment is withdrawn, and the application is restored to pending status. The application is being forwarded to the Head Supervisory Applications Examiner for Technology Center 3700 to:

1. Change the correspondence address to Customer Number 020457, and to make certain that the address agrees with the address at the foot of this Decision;

2. Enter the amendment filed on March 13, 2003 and the Information Disclosure statement filed on April 6, 2004;

3. Place this application in a pending status and return the application to the examiner.

Thereafter, the examiner will consider the application as amended on January 14, 2002 and March 13, 2003, and will also consider all Information Disclosure Statements of record that have not been previously considered. If the application is still deemed to be in condition for allowance, a new Notice of Allowance and a new Notice of Allowability will be promulgated.

PETITION GRANTED.

Richard A. Bertsch, Director
Technology Center 3700

Antonelli Terry Stout and Kraus LLP
1300 N. 17th Street
Suite 1800
Arlington, VA 22209-9889

DATE 9/28/07 APPLICATION NUMBER 09/766,610

DOC CODE Pet.Dec.COCIN DOC DATE 10/01/07

DELIVER THE ATTACHED FIFLE/DOCUMENT TO THE TC SCANNING CENTER

CONTRACTOR: THE ATTACHED FILE/DOCUMENT MUST BE INDEXED AND SCANNED INTO IFW WITHIN **8** WORK HOURS; UPLOADING OF THE SCANNED IMAGES SHOULD OCCUR NO LATER THAN **16** WORK HOURS FOLLOWING RECEIPT OF THIS REQUEST

AFTER SCANNING, ORIGINAL DOCUMENTS SHOULD BE BOXED IN ACCORDANCE WITH INSTRUCTIONS

UNITED STATES PATENT AND TRADEMARK OFFICE

Commissioner for Patents
United States Patent and Trademark Office
P.O. Box 1450
Alexandria, VA 22313-1450
www.uspto.gov

Paper No.

FITZPATRICK CELLA
HARPER & SCINTO
30 ROCKEFELLER PLAZA
NEW YORK NY 10112

COPY MAILED

OCT 01 2007

OFFICE OF PETITIONS

Patent No. 7,146,411	:	LETTER REGARDING
Issue Date: December 5, 2006	:	PATENT TERM ADJUSTMENT
Application No. 09/766,610	:	AND
Filed: January 23, 2001	:	NOTICE OF INTENT TO ISSUE
Atty Docket No. 03560.002719	:	CERTIFICATE OF CORRECTION

This letter is in response to the "COMMENTS ON DETERMINATION OF PATENT TERM ADJUSTMENT" filed January 29, 2007. Pursuant to patentees' duty of good faith and candor to the Office, patentees request review of the Patent Term Adjustment for the above-identified patent.

The request for reconsideration of patent term adjustment indicated in the patent is **GRANTED**.

The patent term adjustment indicated in the patent is to be corrected by issuance of a certificate of correction showing a revised Patent Term Adjustment of three hundred eighty-five (385) days.

On December 5, 2006, this application matured into U.S. Patent No. 7,146,411, with a revised patent term adjustment of 388 days. Patentees give no basis for their assertion that this patent term adjustment is incorrect.

Nonetheless, a review of the application history confirms that patentees are correct that it is incorrect. A period of reduction of 1 day was entered pursuant to § 1.704(c)(10), for applicant delay in filing a Request for Acknowledgment of Priority Papers on October 9, 2006 after the mailing of the notice of allowance. However, the Request was actually filed on

October 6, 2006. Accordingly, a reduction of 4 days for the period beginning on October 6, 2006 and ending on October 9, 2006, the date the Office mailed a response, should have been entered.

In view thereof, the patent should have issued with a revised patent term adjustment of three hundred eighty-five (385) days.

As this letter was submitted as an advisement to the Office of an error in Patentees' favor, the Office will not assess the $200.00 application fee under 37 CFR 1.705(d). The Office thanks patentees for their good faith and candor in bringing this to the attention of the Office.

The application file is being forwarded to the Certificates of Correction Branch for issuance of a certificate of correction in order to rectify this error. The Office will issue a certificate of correction indicating that the term of the above-identified patent is extended or adjusted by **THREE HUNDRED EIGHTY-FIVE (385)** days.

Telephone inquiries specific to this matter should be directed to the undersigned at (571) 272-3219.

Nancy Johnson
Senior Petitions Attorney
Office of Petitions

Enclosure: Copy of DRAFT Certificate of Correction

UNITED STATES PATENT AND TRADEMARK OFFICE

CERTIFICATE OF CORRECTION

PATENT : 7,146,411 B2

DATED : December 5, 2006

INVENTOR(S) : Kazaki

DRAFT

It is certified that error appears in the above-identified patent and that said Letters Patent is hereby corrected as shown below:

On the cover page,

[*] Notice: Subject to any disclaimer, the term of this patent is extended or adjusted under 35 USC 154(b) by (388) days

Delete the phrase "by 388" and insert – by 385 days--

UNITED STATES PATENT AND TRADEMARK OFFICE

Commissioner for Patents
United States Patent and Trademark Office
P.O. Box 1450
Alexandria, VA 22313-1450
www.uspto.gov

CARR & FERRELL LLP
2200 GENG ROAD
PALO ALTO, CA 94303

COPY MAILED

MAR 14 2008

OFFICE OF PETITIONS

In re Application of Glenn FERGUSON, et al Application No. 09/766,615 Filed: July 26, 2001 Attorney Docket No. PA3937US	DECISION ON PETITION TO WITHDRAW FROM RECORD

This is a decision on the Request to Withdraw as attorney or agent of record under 37 C.F.R. § 1.36(b), filed December 10, 2007.

The request is **APPROVED**.

A grantable request to withdraw as attorney/agent of record must be signed by every attorney/agent seeking to withdraw or contain a clear indication that one attorney is signing on behalf of another/others. A request to withdraw will not be approved unless at least 30 (thirty) days would remain between the date of approval and the later of the expiration date of a time to file a response or the expiration date of the maximum time period which can be extended under 37 C.F.R. § 1.136(a).

The request was signed by Daniel C. Kloke on behalf of all attorneys/agents of record associated with Customer Number 22830.

All attorneys/agents of record associated with Customer Number 22830 have been withdrawn.

Applicant is reminded that there is no attorney of record at this time.

The request to change the correspondence of record is not acceptable as the requested correspondence address is not that of: (1) the first named signing inventor; or (2) an intervening assignee of the entire interest under 37 C.F.R 3.71. All future communications from the Office will be directed to the assignee of the entire interest at the first copied address below until otherwise properly notified by the applicant.

Telephone inquiries concerning this decision should be directed to the undersigned at 571-272-6735.

There are no outstanding Office actions pending at the present time.

Diane Goodwyn
Petitions Examiner
Office of Petitions

cc: OPSWARE INC.
599 N. MATHILDA
SUNNYVALE, CA 94085

JONATHAN HARRIS, CONLEY ROSE, P.C.
JPMORGAN CHASE TOWER
600 TRAVIS ST., SUITE 7100
HOUSTON, TX 77002-2912

UNITED STATES PATENT AND TRADEMARK OFFICE

UNITED STATES DEPARTMENT OF COMMERCE
United States Patent and Trademark Office
Address: COMMISSIONER FOR PATENTS
P.O. Box 1450
Alexandria, Virginia 22313-1450
www.uspto.gov

APPLICATION NUMBER	FILING OR 371(C) DATE	FIRST NAMED APPLICANT	ATTY. DOCKET NO./TITLE
09/766,615	07/26/2001	Glenn Ferguson	PA3937US

CONFIRMATION NO. 8359

POWER OF ATTORNEY NOTICE

22830
CARR & FERRELL LLP
2200 GENG ROAD
PALO ALTO, CA 94303

OC000000028844561

Date Mailed: 03/14/2008

NOTICE REGARDING CHANGE OF POWER OF ATTORNEY

This is in response to the Power of Attorney filed 12/10/2007.

- The withdrawal as attorney in this application has been accepted. Future correspondence will be mailed to the new address of record. 37 CFR 1.33.

/dcgoodwyn/

Office of Initial Patent Examination (571) 272-4000 or 1-800-PTO-9199

UNITED STATES PATENT AND TRADEMARK OFFICE

COMMISSIONER FOR PATENTS
UNITED STATES PATENT AND TRADEMARK OFFICE
WASHINGTON, DC 20231
www.uspto.gov

MAIL

AUG 0 8 2001

DIRECTOR OFFICE
TECHNOLOGY CENTER 2100

Paper No. 5

MCDERMOTT, WILL & EMERY
600 13TH STREET, N.W.
WASHINGTON , DC 20005-3096

In re Application of : A. Gorenstein
Application No. 09/766,636
Filed: January 23, 2001
For: SYSTEM AND METHOD FOR COMPOSITE CUSTOMER SEGMENTATION

DECISION ON PETITION TO MAKE SPECIAL

This is a decision on the petition, filed April 3, 2001 under 37 C.F.R. §102(d) and M.P.E.P. § 708.02(VIII): Accelerated Examination, to make the above-identified application special.

M.P.E.P. § 708.02, Section VIII which sets out the prerequisites for a grantable petition for Accelerated Examination under 37 C.F.R. § 102(d) states in relevant part:

A new application (one which has not received any examination by the examiner) may be granted special status provided that applicant (and this term includes applicant's attorney or agent) complies with each of the following items:

(A) Submits a petition to make special accompanied by the fee set forth in 37 CFR 1.17(i);

(B) Presents all claims directed to a single invention, or if the Office determines that all the claims presented are not obviously directed to a single invention, will make an election without traverse as a prerequisite to the grant of special status...;

(C) Submits a statement(s) that a pre-examination search was made, listing the field of search by class and subclass, publication, Chemical Abstracts, foreign patents, etc. A search made by a foreign patent office satisfies this requirement;

(D) Submits one copy each of the references deemed most closely related to the subject matter encompassed by the claims if said references are not already of record; and

(E) Submits a detailed discussion of the references, which discussion points out, with the particularity required by 37 CFR 1.111 (b) and (c), how the claimed subject matter is patentable over the references.

In those instances where the request for this special status does not meet all the prerequisites set forth above, applicant will be notified and the defects in the request will be stated. The application will remain in the status of a new application awaiting action in its regular turn. In those instances where a request is defective in one or more respects, applicant will be given one opportunity to perfect the request in a renewed petition to make special. If perfected, the request will then be granted. If not perfected in the first renewed petition, any additional renewed petitions to make special may or may not be considered at the discretion of the Group Special Program Examiner.

Applicant's submission is deficient in that it does not comply with (B) and (E) above. With respect to (B), no statement is provided indicating that Applicant has presented claims to a single invention. Concerning (E), while applicant has provided a detailed discussion of the references deemed most closely related, this discussion did not clearly point out how the *claimed* subject matter is patentable over the references with the particularity required by 37 CFR 1.111 (b) and (c). Specifically, in contrasting the claims to the references, applicant discusses features that are not explicitly found in the claims, such as scoring "post-model targets using any explanation of variance appropriate", "arriving at a final ranking" and "different explanations of variance". Note also that the claimed subject matter includes a plurality of independent claims of different scope, which impacts what must be discussed when pointing out patentability.

Accordingly, the Petition is **DENIED**. The application file is being forwarded to Central Files to await examination in its proper turn based on its effective filing date.

Any request for reconsideration must be filed within two months of the mailing date of this decision.

Robert A. Weinhardt
Special Program Examiner
Technology Center 2100
Computer Architecture, Software,
& Electronic Commerce
703-305-9780

UNITED STATES PATENT AND TRADEMARK OFFICE

COMMISSIONER FOR PATENTS
UNITED STATES PATENT AND TRADEMARK OFFICE
WASHINGTON, DC 20231
www.uspto.gov

MAILED

JAN 0 3 2002

DIRECTOR'S OFFICE
TECHNOLOGY CENTER 2100

Paper No. 8

MCDERMOTT, WILL & EMERY
600 13TH STREET, N.W.
WASHINGTON , DC 20005-3096

In re Application of : A. Gorenstein
Application No. 09/766,636
Filed: January 23, 2001
For: SYSTEM AND METHOD FOR COMPOSITE CUSTOMER SEGMENTATION

DECISION ON PETITION TO MAKE SPECIAL

This is a decision on the request for reconsideration filed October 5, 2001 from the decision mailed August 8, 2001 concerning the petition filed April 3, 2001 under 37 C.F.R. §102(d) and M.P.E.P. §708.02(VIII): Accelerated Examination, to make the above-identified application special.

M.P.E.P. § 708.02, Section VIII which sets out the prerequisites for a grantable petition for Accelerated Examination under 37 C.F.R. § 102(d) states in relevant part:

A new application (one which has not received any examination by the examiner) may be granted special status provided that applicant (and this term includes applicant's attorney or agent) complies with each of the following items:

(A) Submits a petition to make special accompanied by the fee set forth in 37 CFR 1.17(i);

(B) Presents all claims directed to a single invention, or if the Office determines that all the claims presented are not obviously directed to a single invention, will make an election without traverse as a prerequisite to the grant of special status...;

(C) Submits a statement(s) that a pre-examination search was made, listing the field of search by class and subclass, publication, Chemical Abstracts, foreign patents, etc. A search made by a foreign patent office satisfies this requirement;

(D) Submits one copy each of the references deemed most closely related to the subject matter encompassed by the claims if said references are not already of record; and

(E) Submits a detailed discussion of the references, which discussion points out, with the particularity required by 37 CFR 1.111 (b) and (c), how the claimed subject matter is patentable over the references.

In those instances where the request for this special status does not meet all the prerequisites set forth above, applicant will be notified and the defects in the request will be stated. The application will remain in the status of a new application awaiting action in its regular turn. In those instances where a request is defective in one or more respects, applicant will be given one opportunity to perfect the request in a renewed petition to make special. If perfected, the request will then be granted. If not perfected in the first renewed petition, any additional renewed petitions to make special may or may not be considered at the discretion of the Group Special Program Examiner.

Applicant's petition of April 3, 2001 was indicated as deficient in that it did not comply with (B) and (E) above. The petition and request for reconsideration, considered together, meet (B). With respect to (E), applicant's request for reconsideration satisfies the particularity requirement of (E).

As a result, the criteria set forth above have been met and the petition is **GRANTED**. The application file is being forwarded to the Examiner for accelerated examination in accordance with M.P.E.P. §708.02. If the application is subsequently allowed, it will be given priority for printing. See M.P.E.P. §1309.

Robert A. Weinhardt
Special Program Examiner
Technology Center 2100
Computer Architecture, Software,
& Electronic Commerce
703-305-9780

UNITED STATES PATENT AND TRADEMARK OFFICE

Commissioner for Patents
United States Patent and Trademark Office
Washington, D.C. 20231
www.uspto.gov

Paper No. 14

McDermott, Will & Emory
600 13th Street, N. W.
Washington, DC 20005-3096

COPY MAILED

AUG 1 2 2002

OFFICE OF PETITIONS

In re Application of	:	
Alan K. Gorenstein	:	
Application No. 09/766,636	:	DECISION GRANTING PETITION
Filed: January 23, 2001	:	UNDER 37 CFR 1.137(f)
Attorney Docket No. 38188-382	:	

This is a decision on the petition filed August 1, 2002, to revive the instant nonprovisional application under the unintentional provisions of 37 CFR 1.137(f).

The petition is **GRANTED**.

Petitioner states the instant nonprovisional application is the subject of an application filed in a foreign country on January 17, 2002. However, the U. S. Patent and Trademark Office was unintentionally not notified of this filing within 45 days subsequent to the filing of the subject application in a foreign country.

In view of the above, this application became abandoned pursuant to 35 U.S.C. § 122(b)(2)(B)(iii) and 37 CFR 1.213(c) for failure to timely notify the Office of the filing of an application in a foreign country, or under a multilateral international agreement, that requires publication of applications 18 months after filing.

A petition under 37 CFR 1.137(f) must be accompanied by:

(1) the reply which is met by notification of such filing in a foreign country or under a multinational treaty;

(2) the petition fee as set forth in 37 CFR 1.17(m); and

(3) a statement that the entire delay in filing the required reply from the due date for the reply until the filing of a grantable petition was unintentional. The Commissioner may require additional information where there is a question whether the delay was unintentional.

The instant petition has been found in compliance with 37 CFR 1.137(f). However, while the statement of unintentional delay does not comply with the rule, the statement presented will be construed as meaning that "the entire delay in filing the required reply [Notice to Rescind Previous Nonpublication Request Under 35 U.S.C. § 122(b)(2)(B)(ii)] until the filing of a grantable petition was unintentional." Accordingly, the failure to timely notify the Office of a foreign or international filing within 45 days as provided by 35 USC 122(b)(2)(B)(iii) is accepted as having been unintentionally delayed.

The previous Request and Certification under 35 USC 122(b)(2)(B)(i) has been rescinded. A Corrected Filing Receipt which sets forth the projected publication date of November 21, 2002 accompanies this decision on petition.

Telephone inquiries concerning this decision should be directed to Marianne Morgan at (703) 306-3475.

The application file is being forwarded to Technology Center Art Unit 3622 to await a reply to the final action mailed July 31, 2002. Failure to timely reply to the final Office action will result in the abandonment of the application.

Frances M. Hicks
Lead Petitions Examiner
Office of Petitions
Office of the Deputy Commissioner
for Patent Examination Policy

ATTACHMENT: Corrected Filing Receipt

UNITED STATES PATENT AND TRADEMARK OFFICE

Commissioner for Patents
United States Patent and Trademark Office
P.O. Box 1450
Alexandria, VA 22313-1450
www.uspto.gov

MCGINN INTELLECTUAL PROPERTY LAW GROUP, PLLC
8321 OLD COURTHOUSE ROAD
SUITE 200
VIENNA VA 22182-3817

COPY MAILED

JUL 16 2007

OFFICE OF PETITIONS

In re Application of :
Nakayama :
Application No. 09766,651 : DECISION ON PETITION
Filed: January 23, 2001 :
Attorney Docket Number: FF-0114US :

This is a decision on the petition, filed June 18, 2007 which is being treated as a petition under 37 CFR 1.181, requesting withdrawal of the holding of abandonment in the above-identified application.

The petition is **GRANTED**.

This application was held abandoned for failure to timely respond to the Office action of August 1, 2006, which set a three (3) month shortened statutory period for reply. Accordingly, a reply was due on or before November 1, 2006.

Petitioner states that a timely reply was submitted on October 31, 2006 which included the following papers: request for reconsideration and submission of verified English translation of priority document . Petitioner has provided a copy of the request for reconsideration. The petition is also accompanied by a stamped postcard receipt dated October 31, 2006. The postcard receipt serves as prima facie evidence of timely receipt of a reply.

Review of the file record shows the originally submitted reply sent and received in the Office on October 31, 2006 has been located.

Accordingly, the holding of abandonment for failure to timely file a reply to the Office action of August 1, 2006 is hereby withdrawn and the application restored to pending status.

This application is being referred to art unit 2621 for appropriate action in the normal course of business.

Telephone inquiries concerning this matter should be directed to the undersigned at (571) 272-3215.

Charlema R. Grant

Charlema R. Grant
Petitions Attorney
Office of Petitions

UNITED STATES PATENT AND TRADEMARK OFFICE

Commissioner for Patents
United States Patent and Trademark Office
P.O. Box 1450
Alexandria, VA 22313-1450
www.uspto.gov

Foley & Lardner LLP
Washington Harbor
3000 K Street, Suite 500
Washington, DC 20007-5109

COPY MAILED

DEC 3 0 2005

OFFICE OF PETITIONS

In re
Ullrich et al
Application No. 09/766,678
Patent No. 6,872,688 B2
Filing Date: January 23,2001
Attorney Docket:034536-0448

RECONSIDERATION OF
PATENT TERM ADJUSTMENT

This decision is in response to applicant's submission of a request titled REQUEST FOR RECONSIDERATION OF PATENT TERM ADJUSTMENT UNDER CFR 1.705(b) which is being considered as a request under 37 CFR 1.705(d). Applicants request that the Office adjust the PTA determination made at the time of the issuance of the patent from a determination of forty-six (46) days to a determination of ninety-seven (97) days.

Applicants request for reconsideration of PTA is granted. The Office will adjust the PTA determination to reflect this decision. In addition, the Office will *sua sponte* issue a certificate of correction reflecting that the proper amount of PTA at the time of issuance is ninety-seven (97) days.

Applicants arguments are persuasive. Applicants agreed with the zero day determination at the time of the mailing of the notice of allowance but disagreed as to how much applicant delay had accrued at the time of the mailing of the notice of allowance. Applicants assert that the applicant delays all pursuant to 37 CFR 1.704 (b) accrued to an amount of three hundred and thirty-four (334) days not three hundred and eighty-five days as calculated by the Office. Applicants assert that the Office erred in determining the actual date of response to the missing parts requirement. Applicants assert that the actual response date was November 9, 2001 not January 28, 2002. Accordingly, delay amounted to 123 days not 203 days.

Applicants arguments are persuasive. At the time of the mailing of the notice of allowance the amount of PTA was zero with 3 days of applicant delay and 334 days of Office delay. Subsequent to the notice of allowance, the patent issued 431 days beyond three years. Accordingly, at the time of the issuance of the patent, the actual determination of PTA is ninety-seven (97) days.

After mailing of this decision, the Office will forward the application to the certificate of corrections branch for a prompt issuance of a certificate of correction.

The Office has assessed the $200.00 fee required for this decision. No additional fees are required.

Any questions relating to this decision should be directed to Kery A. Fries, Senior Legal Advisor, at 571-272-7757.

Kery A. Fries

Kery A. Fries
Senior Legal Advisor
Office of Patent Legal Administration
Office of Deputy Commissioner
for Patent Examination Policy.

Cc: Draft certificate of correction
Adjusted Pair Calculation

UNITED STATES PATENT AND TRADEMARK OFFICE

Commissioner for Patents
United States Patent and Trademark Office
P.O. Box 1450
Alexandria, VA 22313-1450
www.uspto.gov

PATTON BOGGS
1660 LINCOLN ST.
SUITE 2050
DENVER CO 80264

COPY MAILED

JAN 22 2007

OFFICE OF PETITIONS

In re Application of	:	
Bortolini et al.	:	
Application No. 09/766736	:	DECISION ON PETITION
Filed: 01/22/2001	:	
Attorney Docket No. Bortolini	:	

This is a decision on the "PETITION UNDER 37 CFR 1.47(A) TO ACCEPT THE FILING OF A RULE 131 DECLARATION IN THE ABSENCE OF ALL THE INVENTORS' SIGNATURES," filed September 14, 2006, which is properly being treated as a petition under 37 CFR 1.183 to waive the requirement that the inventors sign the Declaration set forth in 37 CFR 1.131.

Applicant's attorney stated that he forwarded a copy of the Rule 131 Declaration to the inventors at their last known addresses; however, they constructively refused to execute the Declaration. A review of the record indicates that on October 19, 2006, the Examiner mailed a final Office action, which stated:

> The Declaration filed on September 14th, 2006 under 37 CFR 1.131 is sufficient to overcome the Amit reference. Applicant's request for reconsideration of the finality of the rejection of the last Office action is persuasive and, therefore, the finality of that action is withdrawn.

In view of the above, no further consideration of the matter is necessary. Accordingly, the petition is dismissed as involving a moot issue.

Telephone inquiries related to this decision may be directed to the undersigned at (571) 272-3211.

Christina T. Donnell

Christina Tartera Donnell
Senior Petitions Attorney
Office of Petitions

FAX RECEIVED

MAY 30 2003

PETITIONS OFFICE

#11

PTO/SB/64a (05-03)
Approved for use through xx/xx/200x. OMB 0651-0031
U.S. Patent and Trademark Office; U.S. DEPARTMENT OF COMMERCE

Under the Paperwork Reduction Act of 1995, no persons are required to respond to a collection of information unless it displays a valid OMB control number.

PETITION FOR REVIVAL OF AN APPLICATION FOR PATENT ABANDONED FOR FAILURE TO NOTIFY THE OFFICE OF A FOREIGN OR INTERNATIONAL FILING (37 CFR 1.137(f))	Docket Number (Optional) MIC005 US

First named inventor: ANGAD SINGH

Application No.: 09/766,742 Art Unit: 2877

Filed: 01/22/2001 Examiner: UNKNOWN

Title: AUTOMATED MICROFABRICATION-BASED BIODETECTOR

Attention: Office of Petitions
Mail Stop Petition
Commissioner for Patents
P.O. Box 1450
Alexandria, VA 22313-1450
FAX: (703) 308-6916

NOTE: If information or assistance is needed in completing this form, please contact Petitions Information at (703) 305-9282.

The above-identified application became abandoned pursuant to 35 U.S.C. 122(b)(2)(B)(iii) for failure to timely notify the Office of the filing of an application in a foreign country or under a multinational international treaty that requires publication of applications eighteen months after filing. The date of abandonment is the day after the expiration date of the forty-five (45) day period set in 35 U.S.C. 122(b)(2)(B)(iii).

PURSUANT TO 37 CFR 1.137(f), APPLICANT HEREBY PETITIONS FOR REVIVAL OF THIS APPLICATION UNDER 37 CFR 1.137(b)

1. Petition fee

☐ Small entity-fee $_____ (37 CFR 1.17(m)). Applicant claims small entity status. See 37 CFR 1.27.

☒ Other than small entity - fee $ 1300.00 (37 CFR 1.17(m))

2. Notice of Foreign or International Filing (35 U.S.C. 122(b)(2)(B)(iii) and 37 CFR 1.213(c))

Subsequent to the filing of the above-identified application, an application was filed in another country, or under a multinational international treaty (*e.g.*, filed under the Patent Cooperation Treaty), that requires publication of applications eighteen months after filing. The filing date of the subsequently-filed foreign or international application is JANUARY 22, 2002.

This collection of information is required by 37 CFR 1.137. The information is required to obtain or retain a benefit by the public which is to file (and by the USPTO to process) an application. Confidentiality is governed by 35 U.S.C. 122 and 37 CFR 1.14. This collection is estimated to take 1.0 hour to complete, including gathering, preparing, and submitting the completed application form to the USPTO. Time will vary depending upon the individual case. Any comments on the amount of time you require to complete this form and/or suggestions for reducing this burden, should be sent to the Chief Information Officer, U.S. Patent and Trademark Office, U.S. Department of Commerce, P.O. 1450, Alexandria, VA 22313-1450. DO NOT SEND FEES OR COMPLETED FORMS TO THIS ADDRESS. **SEND TO: Commissioner for Patents, P.O. Box 1450, Alexandria, VA 22313-1450.**

If you need assistance in completing the form, call 1-800-PTO-9199 and select option 2.

06/03/2003 CKHLOK 00000023 09766742

01 FC:1453 1300.00 OP

PTO/SB/64a (05-03)
Approved for use xx/xx/200x. OMB 0651-0031
U.S. Patent and Trademark Office; U.S. DEPARTMENT OF COMMERCE
Under the Paperwork Reduction Act of 1995, no persons are required to respond to a collection of information unless it displays a valid OMB control number.

STATEMENT: The entire delay in filing the required notice of a foreign or international filing from the due date for the required notice until the filing of a grantable petition under 37 CFR 1.137(b) was unintentional.
[NOTE. The United States Patent and Trademark Office may require additional information if there is a question as to whether either the abandonment or the delay in filing a petition under 37 CFR 1.137(b) was unintentional (MPEP 711.03(c), subsections (III)(C) and (D))].

FAX RECEIVED
MAY 30 2003
PETITIONS OFFICE

WARNING: Information on this form may become public. Credit card information should not be included on this form. Provide credit card information and authorization on PTO-2038.

May 30, 2003
Date

S. Omkar
Signature

Telephone Number: 408-982-8200 x 3

OMKAR SURYADEVARA, Reg. 36,320
Typed or printed name

SILICON VALLEY PATENT GROUP LLP
Address
2350 MISSION COLLEGE BLVD, STE 360
SANTA CLARA, CA 95054

Enclosures: ☒ Fee Payment – PTO-2038
☐ Additional sheets containing statements establishing unintentional delay
☐ Other: _____

CERTIFICATE OF MAILING OR TRANSMISSION [37 CFR 1.8(a)]

I hereby certify that this correspondence is being:

☐ deposited with the United States Postal Service on the date shown below with sufficient postage as first class mail in an envelope addressed to: Mail Stop Petition, Commissioner for Patents, P.O. Box 1450, Alexandria, VA 22313-1450.

☒ transmitted by facsimile on the date shown below to the United States Patent and Trademark Office at (703) 308-6916.

May 30, 2003
Date

S. Omkar
Signature

OMKAR SURYADEVARA
Type or printed name of person signing certificate

UNITED STATES PATENT AND TRADEMARK OFFICE

COMMISSIONER FOR PATENTS
UNITED STATES PATENT AND TRADEMARK OFFICE
P.O. BOX 1450
ALEXANDRIA, VA 22313-1450
WWW.USPTO.GOV

Paper No. 12

SILICON VALLEY PATENT GROUP LLP
2350 MISSION COLLEGE BOULEVARD
SUITE 360
SANTA CLARA CA 95054

COPY MAILED

JUN 24 2003

OFFICE OF PETITIONS

In re Application of Singh, et al. Application No. 09/766,742 Filed: January 22, 2001 Attorney Docket No. M-9289 US	: : : : :	ON PETITION

This is a decision on the petition to revive under 37 CFR 1.137(f), filed May 30, 2003, which is being treated as a petition under 37 CFR 1.137(b).

The petition is **GRANTED**.

Petitioner states that the instant nonprovisional application is the subject of a PCT international application filed on January 22, 2002. However, the US Patent and Trademark Office was unintentionally not notified of this filing within 45 days subsequent to the filing of the PCT application.

Applicant filed a "Rescission to Rescind Previous Nonpublication Request" on February 25, 2002. The rescission request did not provide notice of the PCT filing. Accordingly, as the rescission was not made until after the filing of the PCT application, applicant was required by 35 U.S.C. 122(b)(2)(B)(iii) to provide notice of the PCT filing not later than forty-five days after the date the PCT application was filed to avoid abandonment of the application.[1]

In view of the above, this application became abandoned pursuant to 35 USC 122(b)(2)(B)(iii) and 37 CFR 1.213(c) for failure to timely notify the Office of the filing of an application in a foreign country, or under a multilateral international agreement, that requires publication of applications 18 months after filing.

---

[1] See "Clarification of the United States Patent and Trademark Office's Interpretation of the Provisions of 35 U.S.C. 122(b)(2)(B)(ii)-(iv)", available at http://www.uspto.gov/web/offices/pac/dapp/opla/preognotice/35usc122b2binterpret.htm.

A petition under 37 CFR 1.137(f) must be accompanied by:

(1) the reply, which is met by the notification of such filing in a foreign country or under a multinational treaty;

(2) the petition fee as set forth in 37 CFR 1.17(m); and

(3) a statement that the entire delay in filing the required reply from the due date of the reply until the filing of a grantable petition was unintentional.

The instant petition has been found to be in compliance with 37 CFR 1.137(f). Accordingly, the failure to timely notify the Office of a foreign or international filing within 45 days after the date of filing of such foreign or international application as provided by 35 USC 122(b)(2)(B)(iii) and 37 CFR 1.213(c) is accepted as having been unintentionally delayed.

The previous Request and Certification under 35 USC 122(b)(2)(B)(i) has been rescinded. A Notice Regarding Rescission of Nonpublication Request which sets forth a projected publication date of October 2, 2003 accompanies this decision on petition.

The application is being forwarded to Technology Center 1700 for examination in due course.

Telephone inquiries regarding this decision should be directed to the undersigned at (703) 305-0272.

Cliff Congo

Cliff Congo
Petitions Attorney
Office of Petitions

Enc: Notice Regarding Rescission of Nonpublication Request (1 page)

UNITED STATES PATENT AND TRADEMARK OFFICE

COMMISSIONER FOR PATENTS
UNITED STATES PATENT AND TRADEMARK OFFICE
P.O. BOX 1450
ALEXANDRIA, VA 22313-1450
www.uspto.gov

Paper No. 7

Kilpatrick Stockton, LLP
John S. Pratt
1100 Peachtree Street
Atlanta, GA 30309

COPY MAILED

OCT 27 2003

OFFICE OF PETITIONS

In re Application of :
Osamu et al. :
Application No. 09/766,775 : ON PETITION
Filed: January 22, 2001 :
Attorney Docket No. 43056/25775804106 :

This is a decision on the petition under 37 CFR 1.137(b) filed August 20, 2003, to revive the above-identified application.

The petition is granted.

The above-identified application became abandoned for failure to reply in a timely manner in reply to the Notice to File Missing Parts (Notice) mailed March 1, 2001, which set a period for reply of two months from the mail date of the Notice. No extensions of time under the provisions of 37 CFR 1.136 was obtained. Accordingly, the application became abandoned on May 2, 2001.

The application file is being forwarded to the Office of Initial Patent Examination for further processing.

Telephone inquiries regarding this decision should be directed to Latrice Bond at (703) 308-6911.

Latrice Bond

Latrice Bond
Paralegal Specialist
Office of Petitions
Office of the Deputy Commissioner
for Patent Examination Policy

UNITED STATES PATENT AND TRADEMARK OFFICE

COMMISSIONER FOR PATENTS
UNITED STATES PATENT AND TRADEMARK OFFICE
P.O. BOX 1450
ALEXANDRIA, VA 22313-1450
www.uspto.gov

MAIL

SEP 21 2005

DIRECTOR OFFICE
TECHNOLOGY CENTER 2100

THE LAW OFFICE OF IDO TUCHMAN
69-60 108ST., SUITE 503
FOREST HILLS, NY 11375

In re Application of: Crudele, et al.	)	
Application No. 09/766,811	)	**DECISION ON PETITION TO**
Attorney Docket No. GB920000068US1	)	**VACATE FINAL REJECTION**
Filed: 22 January 2001	)	**UNDER 37 CFR §1.181**
For: PREFERABLE MODES OF	)	
SOFTWARE PACKAGE DEPLOYMENT	)	
	)	

This is a decision on the petition, filed 04 January 2005 requesting that the Final Rejection be VACATED which was mailed 16 August 2004 on the above-identified application.

The petition is **MOOT**.

Due to the fact that the prosecution/examination of the above-identified application has advanced such that a Notice of Allowance was mailed to the Applicant on 27 July 2005, and the issue fee was paid 05 August 2005, Applicant's petition regarding the propriety of the Final Rejection, mailed 16 August 2004, is no longer at issue.

Any questions regarding this decision may be directed to the undersigned at 571-272-3595.

Brian L. Johnson
Special Programs Examiner
Technology Center 2100
Computer Architecture, Software, and Information Security

GO

SPE P. 10

SPE RESPONSE FOR CERTIFICATE OF CORRECTION 09/766,814

Paper No.: _____

DATE : 6/9/05

TO SPE OF : ART UNIT 3729

SUBJECT : Request for Certificate of Correction on Patent No.: 6848173

A response is requested with respect to the accompanying request for a certificate of correction.

Please complete this form and return with file, within 7 days to:
Palm location **7580, Certificates of Correction Branch – South Tower – 9A22**
If response is for an IFW, **return to employee (named below) via PUBSCofC Team in MADRAS.**
With respect to the change(s) requested, correcting Office and/or Applicant's errors, should the patent read as shown in the certificate of correction (COCIN)? No new matter should be introduced, nor should the scope or meaning of the claims be changed.

Lamonte Newsome

Thank You For Your Assistance

Certificates of Correction Branch
Tel. No. 703-305-8309

The request for issuing the above-identified correction(s) is hereby:
Note your decision on the appropriate box.

- [X] **Approved** — All changes apply.
- [ ] **Approved in Part** — Specify below which changes **do not** apply.
- [ ] **Denied** — State the reasons for denial below.

Comments:

David P. Bryant
Primary Examiner
SPE

3726/3729
Art Unit

UNITED STATES PATENT AND TRADEMARK OFFICE

COMMISSIONER FOR PATENTS
UNITED STATES PATENT AND TRADEMARK OFFICE
P.O. BOX 1450
ALEXANDRIA, VA 22313-1450
WWW.USPTO.GOV

Paper No. 6

LAW OFFICES OF CHRISTOPHER L. MAKAY
1634 MILAM BUILDING
115 EAST TRAVIS STREET
SAN ANTONIO, TX 78205

COPY MAILED

JUL 2 1 2003

OFFICE OF PETITIONS

In re Application of	:	
David C. Sudolcan et al	:	
Application No. 09/766,818	:	ON PETITION
Filed: January 22, 2001	:	
Attorney Docket No. L-0170.23(D-D)	:	

This is a decision on the petition under 37 CFR 1.137(b), filed July 8, 2003, to revive the above-identified application.

The petition is **GRANTED**.

The above-identified application became abandoned for failure to reply in a timely manner to the Notice to File Corrected Application Papers (Notice) mailed March 7, 2001. The Notice set a period for reply of two (2) months from the mail date of the Notice. No extensions of time under the provisions of 37 CFR 1.136(a) were obtained. Accordingly, the above-identified application became abandoned on May 8, 2001.

Telephone inquiries concerning this decision should be directed to Wan Laymon at (703) 305-9282.

The application file is being forwarded to the Office of Initial Patent Examination.

Wan Laymon

Wan Laymon
Petitions Examiner
Office of Petitions
Office of the Deputy Commissioner
for Patent Examination Policy

SPE RESPONSE FOR CERTIFICATE OF CORRECTION

Paper No.: _____

DATE : August 24, 2005

TO SPE OF : ART UNIT 2634

SUBJECT : Request for Certificate of Correction on Patent No.: 6,904,079

A response is requested with respect to the accompanying request for a certificate of correction.

Please complete this form and return with file, within **7** days to:
Palm location **7580, Certificates of Correction Branch – South Tower – 9A22**
If response is for an IFW, **return to employee (named below) via PUBSCofC Team in MADRAS.**
With respect to the change(s) requested, correcting Office and/or Applicant's errors, should the patent read as shown in the certificate of correction (COCIN)? No new matter should be introduced, nor should the scope or meaning of the claims be changed.

Magdalene Talley

Thank You For Your Assistance

Certificates of Correction Branch
Tel. No. 703-308-9309 ext. 116

The request for issuing the above-identified correction(s) is hereby:
Note your decision on the appropriate box.

- ☒ **Approved** — All changes apply.
- ☐ **Approved in Part** — Specify below which changes **do not** apply.
- ☐ **Denied** — State the reasons for denial below.

Comments:

The change reflect the misspelling in the drawing.

SPE

2634
Art Unit

PTOL-306 (REV. 7/03)

U.S. DEPARTMENT OF COMMERCE Patent and Trademark Office

UNITED STATES PATENT AND TRADEMARK OFFICE

Commissioner for Patents
United States Patent and Trademark Office
P.O. Box 1450
Alexandria, VA 22313-1450
www.uspto.gov

COPY MAILED

APR 0 5 2006

OFFICE OF PETITIONS

GEORGE S. BLASIAK
WALL MARJAMA & BILINSKI
101 SOUTH SALINE STREET, SUITE 400
SYRACUSE, NY 13202

In re Application of :
Robert M. Hussey et al :
Application No. 09/766,922 : DECISION GRANTING PETITION
Filed: January 22, 2001 : UNDER 37 CFR 1.313(c)(2)
Attorney Docket No. 283-280 :

This is a decision on the petition, filed March 29, 2006, under 37 CFR 1.313(c)(2) to withdraw the above-identified application from issue after payment of the issue fee.

The petition is **GRANTED**.

The above-identified application is withdrawn from issue for consideration of a submission under 37 CFR 1.114 (request for continued examination). See 37 CFR 1.313(c)(2).

Petitioner is advised that the issue fee paid on December 13, 2005 in the above-identified application cannot be refunded. If, however, the above-identified application is again allowed, petitioner may request that it be applied towards the issue fee required by the new Notice of Allowance.[1]

Telephone inquiries should be directed to the undersigned at (571) 272-3218.

This matter is being referred to Technology Center AU 2625 for processing of the request for continued examination under 37 CFR 1.114 and for consideration of the Information Disclosure Statement.

Frances Hicks
Petitions Examiner
Office of Petitions

C:\Documents and Settings\FHicks\My Documents\470\Apr9\766922.wpd

---

[1] *The request to apply the issue fee to the new Notice may be satisfied by completing and returning the new Part B – Fee(s) Transmittal Form (along with any balance due at the time of submission), which includes the following language thereon: "The Director of the USPTO is requested to apply the Issue Fee and Publication Fee (if any) or to re-apply any previously paid issue fee in the application identified above. Petitioner is advised that, whether a fee is indicated as being due or not, the Issue Fee Transmittal Form* ***must*** *be completed and timely submitted to avoid abandonment. Note the language in bold text on the first page of the Notice of Allowance and Fee(s) Due (PTOL-85).*

UNITED STATES PATENT AND TRADEMARK OFFICE

Commissioner for Patents
United States Patent and Trademark Office
P.O. Box 1450
Alexandria, VA 22313-1450
www.uspto.gov

GIFFORD, KRASS, GROH, SPRINKLE & CITKOWSKI, P.C
PO BOX 7021
TROY MI 48007-7021

COPY MAILED
JUL 14 2006
OFFICE OF PETITIONS

In re Application of Wright Application No. 09/767,014 Filed: January 22, 2001 Attorney Docket No. SLC-10002/29 For: INSTANTANEOUS INTERNET CHARGING	: : : : :	ON PETITION

This is a decision on the petition under 37 CFR 1.181, filed June 6, 2006, requesting that the Office withdraw the holding of abandonment of the above-identified application.

The petition under 37 CFR 1.181 is **GRANTED**.

This application was held abandoned for failure to respond in a timely manner to the non-final Office action, mailed September 6, 2005, which set forth an extendable three (3) month period for reply. The Office contended that this application became abandoned on December 7, 2005 for failure to reply to the September 6, 2005 non-final Office action. A Notice of Abandonment was mailed on May 23, 2006.

A Notice of Appeal was filed in this application on April 15, 2005. An Appeal Brief was timely filed on June 20, 2005 (certificate of mailing date June 15, 2005). Examiner Charles reopened prosecution with the September 6, 2005 non-final Office action. Petitioner was given two options for replying to the September 6, 2005 non-final Office action. Petitioner could file an amendment or request reinstatement of the Appeal. Petitioner requested reinstatement of the Appeal and filed a supplemental Appeal Brief on December 8, 2005 (certificate of mailing date December 6, 2005). These documents are present in the application file. Therefore, petitioner filed a proper reply to the September 6, 2005 non-final Office action in a timely fashion.

The petition under 37 CFR 1.181 is **granted**, the Notice of Abandonment is **vacated**, and the holding of abandonment is withdrawn. No petition fee has been or will be charged in connection with this matter.

Accordingly, the application file will be forwarded to Technology Center A.U. 3624 for consideration of petitioner's request for reinstatement of the Appeal and supplemental Appeal Brief, both filed on December 8, 2005 (certificate of mailing date December 6, 2005).

Telephone inquiries pertaining to this matter may be directed to the undersigned at (571) 272-3230.

Shirene Willis Brantley

Shirene Willis Brantley
Senior Petitions Attorney
Office of Petitions
Office of the Deputy Commissioner
for Patent Examination Policy

UNITED STATES PATENT AND TRADEMARK OFFICE

COMMISSIONER FOR PATENT
UNITED STATES PATENT AND TRADEMARK OFFIC
WASHINGTON, D.C. 20231
www.uspto.go

JJGJr.: 11-02

Paper 8

GOTTLIEB RACKMAN & REISMAN PC
270 MADISON AVENUE
8TH FLOOR
NEW YORK NY 10016-0601

COPY MAILED

NOV 0 8 2002

OFFICE OF PETITIONS

In re Application of
Hochman, et al :
Application No. 09/767,027 : ON PETITION
Filed: 22 January, 2001 :
Attorney Docket No. 3486-024 DIV III :

This is a decision on the petitions filed:

- filed on 13 November, 2001, and resubmitted via FAX on 3 October, 2002, under 37 C.F.R. §1.137(a)[1] to revive the above-identified application, and in light of the allegation of non-receipt also considered as a request to withdraw the holding of abandonment under 37 C.F.R. §1.181;[2] and

---

[1] A Petition filed under the provisions of 37 C.F.R. §1.137(a) must be accompanied by:
(a) The required reply, unless previously filed. In a nonprovisional application abandoned for failure to prosecute, the required reply may be met by the filing of a continuing application. In an application for patent, abandoned or lapsed for failure to pay the issue fee or any portion thereof, the required reply must be the payment of the issue fee or any outstanding balance thereof;
(b) the petition fee required by 37 C.F.R. §1.17(l);
© A showing to the satisfaction of the Commissioner that the entire delay in filing the required reply from the reply due date until the filing of a grantable petition pursuant to the is paragraph was unavoidable; and
(d) Any terminal disclaimer (and fee set forth in 37 C.F.R. §1.20(d)) required pursuant to 37 C.F.R. §1.137(c).

An application is "unavoidably" abandoned only where Petitioner (or Petitioner's counsel) takes all action necessary for a proper response to the outstanding Office action, but through the intervention of unforeseen circumstances, the response is not timely received in the Office. That is, in the context of ordinary human affairs the test is such care as is generally used and observed by prudent and careful persons in relation to their most important business. Ex parte Pratt, 1887 Dec. Comm'r Pat. 31 (Comm'r Pat. 1887); Ex parte Henrich, 1913 Dec. Comm'r Pat. 139, 141 (Comm'r. Pat. 1913).

[2] The regulations at 37 C.F.R. §1.181 provide, in pertinent part:
§1.181 Petition to the Commissioner.
(a) Petition may be taken to the Commissioner: (1) From any action or requirement of any examiner in the *ex parte* prosecution of an application which is not subject to appeal to the Board of Patent Appeals and Interferences or to the court; (2) In cases in which a statute or the rules specify that the matter is to be determined directly by or reviewed by the Commissioner; and (3) To invoke the supervisory authority of the Commissioner in appropriate circumstances. * * *
(b) Any such petition must contain a statement of the facts involved and the point or points to be reviewed and the action requested. Brief or memoranda, if any, in support thereof should accompany or be embodied in the petition; and where facts are to be proven, the proof in the form of affidavits or declaration (and exhibits, if any) must accompany the petition.
© When a petition is taken from an action or requirement of an examiner in the *ex parte* prosecution of an application, it may be required that there have been a proper request for reconsideration (§1.111) and a repeated action by the examiner. The examiner may be directed by the Commissioner to furnish a written statement, within a specified time, setting forth the reasons for his decision upon the matters averred in the petition, supplying a copy thereof to the petitioner.
(d) Where a fee is required for a petition to the Commissioner the appropriate section of this part will so indicate. If any required fee does not accompany the petition, the petition will be dismissed. * * *
(f) Except as otherwise provided in these rules, any such petition not filed within 2 months from the action complained of, may be dismissed as

- filed on 7 November, 2002, alternatively under 37 C.F.R. §1.137(b)[3] to revive the above-identified application.

For the reasons set forth below, the petition:

- under 37 C.F.R. §1.137(b) is **GRANTED**;[4]
- under 37 C.F.R. §1.137(a) is **DISMISSED**;[5] and
- as considered under 37 C.F.R. §1.181 is **DISMISSED**.[6]

BACKGROUND

The record indicates that:

- after the instant application was filed on 22 January, 2001, without, *inter alia*, the basic filing fees, on 26 March, 2001, the Office mailed a Notice of Missing Parts, with a response due (absent extension of time) on or before 26 May, 2001;
- on 9 April, 2001 Petitioner filed a "Response to Notice to File Missing Parts," contesting therein fees amounts, but failing to submit the payment (or authorization for payment) of the fees not contested;
- 21 May, 2001, the Office mailed a second Notice of Missing Parts, with a response due (absent extension of time) on or before 21 July, 2001;

---

untimely. The mere filing of a petition will not stay the period for reply to an Examiner's action which may be running against an application, nor act as a stay of other proceedings. * * * (Emphasis supplied.)

[3] Effective December 1, 1997, the provisions of 37 C.F.R. §1.137(b) now provide that where the delay in reply was unintentional, a petition may be filed to revive an abandoned application or a lapsed patent pursuant to 37 C.F.R. §1.137(b). a grantable petition filed under the provisions of 37 C.F.R. §1.137(b) must be accompanied by:
(1) the required reply, unless previously filed. In a nonprovisional application abandoned for failure to prosecute, the required reply may be met by the filing of a continuing application. In an application or patent, abandoned or lapsed for failure to pay the issue fee or any portion thereof, the required reply must be the payment of the issue fee or any outstanding balance thereof.
(2) the petition fee as set forth in 37 C.F.R. §1.17(m);
(3) a statement that the entire delay in filing the required reply from the due date for the reply until the filing of a grantable petition pursuant to 37 C.F.R. §1.137(b) was unintentional. The Commissioner may require additional information where there is a question whether the delay was unintentional; and
(4) any terminal disclaimer (and fee set forth in 37 C.F.R. §1.20(d)) required pursuant to 37 C.F.R. §1.137(c). (Emphasis supplied.)

[4] Pursuant to Petitioner's authorization, the petition fee ($640.00) is charged to Deposit Account 07-1730.

[5] Pursuant to Petitioner's authorization, the petition fee ($55.00) is charged to Deposit Account 07-1730.

[6] Pursuant to Petitioner's authorization, the petition fee ($130.00) is charged to Deposit Account 07-1730.

- on 25 June, 2001, Petitioner replied to second Notice of Missing Parts, tendered a check in the amount of $40.00 to cover the costs of filing an assignment, and authorized any additional fees to be charged against Deposit Account 07-1730;

- a review by Office staff of Office records of Deposit Account 07-1730 on the date in question indicated that there were insufficient funds to satisfy applicable filing fees and required extensions of time;

- the application went abandoned at midnight 26 May, 2001;

- no Notice of Abandonment was mailed;

- in his inquiry to obtain a corrected filing receipt, Petitioner learned in November 2001 of the abandoned status of the application and filed on 13 November, 2001, a petition under 37 C.F.R. §1.137(a);

- Petitioner filed a Request for Status on 6 June, 2002, and submitted via FAX an additional copy of the Noember 2001 petition on 3 October, 2002;

- on 7 November, 2002, Petitioner filed the petition (with fee authorization) under 37 C.F.R. §1.137(b), including therein the statement of unintentional delay (the statement), and authorization for applicable outstanding fees (the reply)--to be charged at the amounts now in force.[7]

STATUTES, REGULATIONS AND ANALYSIS

Congress has authorized the Commissioner to "revive an application if the delay is shown to the satisfaction of the Commissioner to have been "unavoidable." 35 U.S.C. §133 (1994).[8]

The regulations at 37 C.F.R. §1.137 set forth the requirements for a petitioner to revive a previously unavoidably or unintentionally abandoned application under this congressional grant of authority .

The language of 35 U.S.C. §133 <u>and</u> 37 C.F.R. §1.137(a) is clear, unambiguous, and without

---

[7] Pursuant to Petitioner's authorization, small entity basic filing fee ($370.00), the fee for extra claims ($27.00), and the late payment surcharge ($65.00) are charged to Deposit Account 07-1730.

[8] 35 U.S.C. §133 provides:
35 U.S.C. §133 Time for prosecuting application.
Upon failure of the applicant to prosecute the application within six months after any action therein, of which notice has been given or mailed to the applicant, or within such shorter time, not less than thirty days, as fixed by the Commissioner in such action, the application shall be regarded as abandoned by the parties thereto, unless it be shown to the satisfaction of the Commissioner that such delay was unavoidable.

qualification: the delay in tendering the reply to the outstanding Office action, as well as filing the first petition seeking revival, must have been unavoidable for the reply now to be accepted on petition.[9]

Delays in responding properly raise the question whether delays are unavoidable.[10]

Where there is a question whether the delay was unavoidable, Petitioners must meet the burden of establishing that the delay was unavoidable within the meaning of 35 U.S.C. §133 and 37 C.F.R. §1.137(a).[11]

And Petitioner must be diligent in attending to the matter.[12]

Moreover, it long has been the position of the Office that the use of the filing periods (such as in 37 C.F.R. §1.137(b)) as an "extension of time" is an "abuse" of the procedures for reviving abandoned applications, and is contrary to the meaning and intent of the regulation.[13]

The Office has indicated that petitions to revive must be filed promptly after the applicant becomes aware of the abandonment.[14] Failure to do so does not demonstrate the care required under Pratt, and so cannot satisfy the test for diligence and due care.

By contrast, unintentional delays are those that do not satisfy the very strict statutory and regulatory requirements of unavoidable delay, and also, by definition, are not intentional.[15]

---

[9] Therefore, by example, an unavoidable delay in the payment of the Filing Fee might occur if a reply is shipped by the US Postal Service, but due to catastrophic accident, the delivery is not made.

[10] See: *Changes to Patent Practice and Procedure; Final Rule Notice*, 62 *Fed. Reg.* at 53158-59 (October 10, 1997), 1203 *Off. Gaz. Pat. Office* at 86-87 (October 21, 1997).

[11] See: In re Application of G, 11 USPQ2d 1378, 1380 (Comm'r Pats. 1989).

[12] See: Diligence in Filing Petitions to Revive and Petitions to Withdraw the Holding of Abandonment, 1124 Off. Gaz. Pat. Office 33 (March 19, 1991). It was and is Petitioner's burden to exercise diligence in seeking either to have the holding of abandonment withdrawn or the application revived. See 1124 Off. Gaz. Pat. Office supra.

[13] See: In re Application of S, 8 USPQ2d 1630, 1632 (Comm'r Pats. 1988). Where there is a question whether the delay was unintentional, the petitioner must meet a burden of establishing that the delay was unintentional within the meaning of 35 U.S.C. § 41(a)(7) and 37 C.F.R. §1.137(b). See: In re Application of G, 11 USPQ2d 1378, 1380 (Comm'r Pats. 1989).

[14] See: Diligence in Filing Petitions to Revive and Petitions to Withdraw the Holding of Abandonment, 1124 Off. Gaz. Pat. Office 33 (March 19, 1991). It was and is Petitioner's burden to exercise diligence in seeking either to have the holding of abandonment withdrawn or the application revived. See 1124 Off. Gaz. Pat. Office supra.

[15] Therefore, by example, an unintentional delay in the reply might occur if the reply and transmittal form are to be prepared for shipment by the US Postal Service, but other pressing matters distract one's attention and the mail is not timely deposited for shipment.

Allegations as to Withdrawal of the Holding of Abandonment and Unavoidable Delay

Petitioner makes no showing in support of either unavoidable delay or withdrawal of the holding of abandonment, save that he apparently was unaware of the status of the Deposit Account.

While there may have been a lapse or mistake by Counsel's office, it in no way satisfies the Pratt showing required herein.

More than 35 years ago the Court of Customs and Patent Appeals warned practitioners in Lorenz v. Finkl[16] that "ordinary prudence" demands that they take "appropriate action" as directed by the Office, and practitioners disregard this warning at peril to their client's matters. (Moreover, as long as the attorney/agent has not acted to deceive the client,[17] the act(s) or omissions of the attorney/agent are imputed wholly to the applicant/client who hired the attorney/agent.[18])

As is clear, Petitioner fails to satisfy the burdens set forth under 37 C.F.R. §1.137(a), revival based upon unavoidable delay is not appropriate, and the petition therefor hereby is **dismissed**.

The courts have determined the construct for properly supporting a request to withdraw a holding of abandonment.[19]

As is clear, Petitioner fails to satisfy the burdens set forth in Delgar v. Schulyer. Withdrawal of the holding of abandonment is not appropriate, and the petition therefor hereby is **dismissed**.

Allegation of Unintentional Delay

Petitioner has filed a petition and fee under 37 C.F.R. §1.137(b), and has made the statement and submitted the reply (in this case, fees) required.

---

[16] Lorenz v. Finkl, 142 USPQ 26, 27-28 (CCPA 1964).

[17] When an attorney intentionally conceals a mistake he has made, thus depriving the client of a viable opportunity to cure the consequences of the attorney's error, the situation is not governed by the stated rule in Link for charging the attorney's mistake to his client. In re Lonardo, 17 USPQ2d 1455 (Comm'r. Pat. 1990).

[18] The actions or inactions of the attorney/agent must be imputed to the petitioners, who hired the attorney/agent to represent them. Link v. Wabash Railroad Co., 370 U.S. 626, 633-634, 82 S.Ct. 1386, 1390-91 (1962). The failure of a party's attorney to take a required action or to notify the party of its rights does not create an extraordinary situation. Moreover, the neglect of a party's attorney is imputed to that party and the party is bound by the consequences. See Huston v. Ladner, 973 F.2d 1564, 23 USPQ2d 1910 (Fed Cir. 1992); Herman Rosenberg and Parker-Kalon Corp. v. Carr Fastener Co., 10 USPQ 106 (2d Cir. 1931).

[19] See: Delgar v. Schulyer, 172 USPQ 513 (D.D.C. 1971).

Therefore, the petition under 37 C.F.R. §1.137(b) hereby is **granted**.

This matter is forwarded to OIPE for processing and the correction of the error as to Petitioner's docket number, and thereafter the application will be forwarded to Technology Center 3700 for examination in due course.

Telephone inquiries regarding this decision should be directed to the undersigned at (703) 305-9199.

John J. Gillon, Jr.
Senior Attorney
Office of Petitions
Office of the Deputy Commissioner
for Patent Examination Policy.

UNITED STATES PATENT AND TRADEMARK OFFICE

COMMISSIONER FOR PATENTS
UNITED STATES PATENT AND TRADEMARK OFFICE
P.O. BOX 1450
ALEXANDRIA, VA 22313-1450
www.uspto.gov

Paper No. 9

MAIL

APR 08 2004

DIRECTOR OFFICE
TECHNOLOGY CENTER 2600

MORRISON & FOERSTER LLP
1650 TYSONS BOULEVARD
SUITE 300
MCLEAN VA 22102

In re Application of
Freeman et al.
Application No. 09/767,053
Filed: January 22, 2001
For: CUSTOMIZED PROGRAM CREATION BY SPLICING SERVER BASED VIDEO, AUDIO, OR GRAPHICAL SEGMENTS

DECISION ON REQUEST TO WITHDRAW AS ATTORNEY

This is a decision on the requests to withdraw as attorney/agent of record filed on October 07, 2003.

A grantable request to withdraw as attorney/agent of record must do the following:
(1) indicate the present mailing address of the attorney(s)/agent(s) who seek(s) to withdraw, and
(2) be signed by each attorney/agent seeking to withdraw or clearly be signed on their behalf, and
(3) be *approved* at least thirty (30) days prior to the maximum extendable period for response to any outstanding Office Action, and
(4) indicate the address to which future correspondence should be mailed.

The Requests to Withdraw as Attorney are **DISMISSED AS MOOT**.

Attorney requesting withdrawal is not of record due to a Revocation of Power of Attorney executed by the assignee on December 10, 2003.

Further communications will continue to be directed to the address listed above until such a time as applicant properly notifies the Patent and Trademark Office of a change of address. A courtesy copy of this decision is being sent to the petitioner at the address below. The application is being returned to TC 2600 central files to await action.

Dwayne Bost
Special Program Examiner
Technology Center 2600
Communications
(703) 305-4778

cc : DORSEY & WHITNEY, LLP
REPUBLIC PLAZA BUILDING, SUITE 4700
3700 SEVENTEENTH STREET
DENVER, CO 80202

UNITED STATES PATENT AND TRADEMARK OFFICE

Commissioner for Patents
United States Patent and Trademark Office
P.O. Box 1450
Alexandria, VA 22313-1450
www.uspto.gov

Paper No.

STERNE, KESSLER,
GOLDSTEIN & FOX P.L.L.C.
1100 NEW YORK AVENUE, N.W.
WASHINGTON DC 20005

COPY MAILED
JUL 25 2007
OFFICE OF PETITIONS

In re Patent No. 7,064,105	:	DECISION ON REQUEST
Joullie et al.	:	FOR RECONSIDERATION OF
Issue Date: June 20, 2006	:	PATENT TERM ADJUSTMENT
Application No. 09/767,080	:	and
Filed: January 22, 2001	:	NOTICE OF INTENT TO ISSUE
Atty Docket No. 1694.0640001	:	CERTIFICATE OF CORRECTION

This is a decision on the "Request for Reconsideration of Patent Term Adjustment Determination Under 37 C.F.R. § 1.705(d)" filed August 21, 2006. Patentees request that the Patent Term Adjustment (PTA) for the captioned patent be corrected to allow an addition of 77 days to the current PTA of 621 days, for a total PTA of 698 days.

The request for reconsideration of the patent term adjustment indicated in the patent is **GRANTED to the extent indicated herein**.

The patent term adjustment indicated in the patent is to be corrected by issuance of a certificate of correction showing a revised Patent Term Adjustment of seven hundred (700) days.

On June 20, 2006, the above-identified application matured into U.S. Patent No. 7,064,105. The instant request for reconsideration filed Monday, August 21, 2006 was timely filed within 2 months of the date the patent issued. See § 1.705(d). The Patent issued with a revised Patent Term Adjustment of 621 days. Patentees dispute the reduction of 120 days associated with the filing of a declaration after the mailing of the notice of allowance. Patentees argue that the filing of the declaration should not have resulted in reduction of PTA because the filing of the paper was in response to an express request by the PTO. As such, patentees argue a reduction under 37 CFR 1.704(c)(8) is not warranted. Patentees also disclose that

pursuant to 37 CFR 1.704(c)(10), a period of reduction of 42 days should be entered for the filing of a supplemental Information Disclosure Statement on August 4, 2005.

With respect to the reduction associated with the IDS, patentees are correct that a reduction is warranted. However, the period of reduction is 41 days (not 42 days as asserted by patentees), beginning on August 4, 2005, the date of filing of the IDS and ending on September 13, 2005, the date of mailing of the supplemental notice of allowability in response.

With respect to the reduction of 120 days for the filing of the declaration, patentees' argument is not well founded. This reduction was entered pursuant to § 1.704(c)(10), not § 1.704(c)(8).

37 CFR 1.704(c) provides that:

> Circumstances that constitute a failure of the applicant to engage in reasonable efforts to conclude processing or examination of an application also include the following circumstances, which will result in the following reduction of the period of adjustment set forth in § 1.703 to the extent that the periods are not overlapping:
>
> (10) Submission of an amendment under § 1.312 or other paper after a notice of allowance has been given or mailed, in which case the period of adjustment set forth in § 1.703 shall be reduced by the lesser of:
>
> > (i) The number of days, if any, beginning on the date the amendment under § 1.312 or other paper was filed and ending on the mailing date of the Office action or notice in response to the amendment under § 1.312 or such other paper; or
> >
> > (ii) Four months; …

The relevant declaration falls within 37 CFR 1.704(c)(10) as it is a paper filed after the mailing of the notice of allowance. Further, § 1.704(c)(10) does not exclude papers requested by the examiner. Any paper, other than one which the Director has deemed its filing after the mailing of the notice of allowance does not constitute a failure to engage, filed after the mailing

of the notice of allowance may lead to entry of a period of reduction.

Nonetheless, a review of the record reveals that entry of the period of reduction pursuant to 37 CFR 1.704(c)(10) for the filing of the declaration is not warranted. The declaration was submitted on February 6, 2006 with evidence that it was a copy of a declaration originally submitted June 22, 2001. The record supports a conclusion that the originally submitted declaration was lost by the Office. The original transmittal of the declaration is present in the application with a date of receipt of June 22, 2001. Under the circumstances of the resubmission, it is appropriate to treat the declaration as submitted on or about June 22, 2001, prior to the mailing of the Notice of Allowance on July 5, 2005. Moreover, the resubmission of the missing declaration on February 6, 2006 did not constitute a failure to engage within the meaning of 37 CFR 1.704(c)(10).

In view thereof, the patent term adjustment indicated on the patent should be seven hundred (700) days.

The Office acknowledges submission of the $200.00 fee set forth in 37 CFR 1.18(e). No additional fees are required.

The application file is being forwarded to the Certificates of Correction Branch for issuance of a certificate of correction in order to rectify this error. The Office will issue a certificate of correction indicating that the term of the above-identified patent is extended or adjusted by **SEVEN HUNDRED (700)** days.

Telephone inquiries specific to this matter should be directed to the undersigned at (571) 272-3219.

Nancy Johnson
Senior Petitions Attorney
Office of Petitions

Enclosure: Copy of DRAFT Certificate of Correction

UNITED STATES PATENT AND TRADEMARK OFFICE

CERTIFICATE OF CORRECTION

PATENT : 7,064,105 B2

DATED : June 20, 2006

INVENTOR(S) : Jouilie et al.

DRAFT

It is certified that error appears in the above-identified patent and that said Letters Patent is hereby corrected as shown below:

On the cover page,

[*] Notice: Subject to any disclaimer, the term of this patent is extended or adjusted under 35 USC 154(b) by (621) days

Delete the phrase "by 621" and insert – by 700 days--

SPE RESPONSE FOR CERTIFICATE OF CORRECTION

Paper No.: _____

DATE : 1/24/06

TO SPE OF : ART UNIT 2181

SUBJECT : Request for Certificate of Correction for Appl. No.: 09/767084 Patent No.: 6715089

Please respond to this request for a certificate of correction within 7 days.

Please review the requested changes/corrections as shown in the **COCIN** document(s) in the IFW application image. No new matter should be introduced, nor should the scope or meaning of the claims be changed.

Please complete the response (see below) and forward the completed response to scanning using document code **COCX**.

HENRY RANDALL
Certificates of Correction Branch
703-308-9390 ext.

Thank You For Your Assistance

The request for issuing the above-identified correction(s) is hereby:
Note your decision on the appropriate box.

- ☒ **Approved** — All changes apply.
- ☐ **Approved in Part** — Specify below which changes **do not** apply.
- ☐ **Denied** — State the reasons for denial below.

Comments: _____

SPE

2115
Art Unit

Under the Paperwork Reduction Act of 1995, no persons are required to respond to a collection of information unless it displays valid OMB control number.

PETITION TO ACCEPT UNINTENTIONALLY DELAYED PAYMENT OF MAINTENANCE FEE IN AN EXPIRED PATENT (37 CFR 1.378(c))

Patent Number	Issue Date (YYYY-MM-DD)	Application Number	Filing Date (YYYY-MM-DD)	Docket Number (if applicable)
6500006	2002-12-31	09767130	2001-01-22	

CAUTION: Maintenance fee (and surcharge, if any) payment must correctly identify: (1) the patent number and (2) the application number of the actual U.S. application leading to issuance of that patent to ensure the fee(s) is/are associated with the correct patent. 37 CFR 1.366(c) and (d).

SMALL ENTITY
☒ Patentee claims, or has previously claimed, small entity status. See 37 CFR 1.27.

LOSS OF ENTITLEMENT TO SMALL ENTITY STATUS
☐ Patentee is no longer entitled to small entity status. See 37 CFR 1.27(g)

NOT Small Entity		Small Entity	
Fee	Code	Fee	Code
○ 3 ½ year	(1551)	◉ 3 ½ year	(2551)
○ 7 ½ year	(1552)	○ 7 ½ year	(2552)
○ 11 ½ year	(1553)	○ 11 ½ year	(2553)

SURCHARGE
The surcharge required by 37 CFR 1.20(i)(2) (Fee Code 1558) must be paid as a condition of accepting unintentionally delayed payment of the maintenance fee.

MAINTENANCE FEE (37 CFR 1.20(e)-(g))
The appropriate maintenance fee must be submitted with this petition.

STATEMENT
THE UNDERSIGNED CERTIFIES THAT THE DELAY IN PAYMENT OF THE MAINTENANCE FEE TO THIS PATENT WAS UNINTENTIONAL

PETITIONER(S) REQUEST THAT THE DELAYED PAYMENT OF THE MAINTENANCE FEE BE ACCEPTED AND THE PATENT REINSTATED

THIS PORTION MUST BE COMPLETED BY THE SIGNATORY OR SIGNATORIES

37 CFR 1.378(d) states: "Any petition under this section must be signed by an attorney or agent registered to practice before the Patent and Trademark Office, or by the patentee, the assignee, or other party in interest."

I certify, in accordance with 37 CFR 1.4(d)(4) that I am

◉ An attorney or agent registered to practice before the Patent and Trademark Office

○ A sole patentee

○ A joint patentee; I certify that I am authorized to sign this submission on behalf of all the other patentees.

○ A joint patentee; all of whom are signing this e-petition

○ The assignee of record of the entire interest

Patent Practitioner			
A signature of the applicant or representative is required in accordance with 37 CFR 1.33 and 10.18. Please see 37 CFR 1.4(d) for the form of the signature			
Signature	/DavidSNagy/	Date (YYYY-MM-DD)	2008-12-22
Name	David S. Nagy	Registration Number	50708

This collection of information is required by 37 CFR 1.378(c). The information is required to obtain or retain a benefit by the public which is to file (and by the USPTO to process) an application. Confidentiality is governed by 35 U.S.C. 122 and 37 CFR 1.11 and 1.14. This collection is estimated to take 1 hour to complete, including gathering, preparing, and submitting the completed application form to the USPTO. Time will vary depending upon the individual case. Any comments on the amount of time you require to complete this form and/ or suggestions for reducing this burden, should be sent to the Chief Information Officer, U.S. Patent and Trademark Office, U.S. Department of Commerce, P.O. Box 1450, Alexandria, VA 22313-1450. DO NOT SEND FEES OR COMPLETED FORMS TO THIS ADDRESS. **This form can only be used when in conjunction with EFS-Web. If this form is mailed to the USPTO, it may cause delays in reinstating the patent.**

Privacy Act Statement

The Privacy Act of 1974 (P.L. 93-579) requires that you be given certain information in connection with your submission of the attached form related to a patent application or patent. Accordingly, pursuant to the requirements of the Act, please be advised that: (1) the general authority for the collection of this information is 35 U.S.C. 2(b)(2); (2) furnishing of the information solicited is voluntary; and (3) the principal purpose for which the information is used by the U.S. Patent and Trademark Office is to process and/or examine your submission related to a patent application or patent. If you do not furnish the requested information, the U.S. Patent and Trademark Office may not be able to process and/or examine your submission, which may result in termination of proceedings or abandonment of the application or expiration of the patent.

The information provided by you in this form will be subject to the following routine uses:

1. The information on this form will be treated confidentially to the extent allowed under the Freedom of Information Act (5 U.S.C. 552) and the Privacy Act (5 U.S.C. 552a). Records from this system of records may be disclosed to the Department of Justice to determine whether the Freedom of Information Act requires disclosure of these record s.

2. A record from this system of records may be disclosed, as a routine use, in the course of presenting evidence to a court, magistrate, or administrative tribunal, including disclosures to opposing counsel in the course of settlement negotiations.

3. A record in this system of records may be disclosed, as a routine use, to a Member of Congress submitting a request involving an individual, to whom the record pertains, when the individual has requested assistance from the Member with respect to the subject matter of the record.

4. A record in this system of records may be disclosed, as a routine use, to a contractor of the Agency having need for the information in order to perform a contract. Recipients of information shall be required to comply with the requirements of the Privacy Act of 1974, as amended, pursuant to 5 U.S.C. 552a(m).

5. A record related to an International Application filed under the Patent Cooperation Treaty in this system of records may be disclosed, as a routine use, to the International Bureau of the World Intellectual Property Organization, pursuant to the Patent Cooperation Treaty.

6. A record in this system of records may be disclosed, as a routine use, to another federal agency for purposes of National Security review (35 U.S.C. 181) and for review pursuant to the Atomic Energy Act (42 U.S.C. 218(c)).

7. A record from this system of records may be disclosed, as a routine use, to the Administrator, General Services, or his/her designee, during an inspection of records conducted by GSA as part of that agency's responsibility to recommend improvements in records management practices and programs, under authority of 44 U.S.C. 2904 and 2906. Such disclosure shall be made in accordance with the GSA regulations governing inspection of records for this purpose, and any other relevant (i.e., GSA or Commerce) directive. Such disclosure shall not be used to make determinations about individuals.

8. A record from this system of records may be disclosed, as a routine use, to the public after either publication of the application pursuant to 35 U.S.C. 122(b) or issuance of a patent pursuant to 35 U.S.C. 151. Further, a record may be disclosed, subject to the limitations of 37 CFR 1.14, as a routine use, to the public if the record was filed in an application which became abandoned or in which the proceedings were terminated and which application is referenced by either a published application, an application open to public inspections or an issued patent.

9. A record from this system of records may be disclosed, as a routine use, to a Federal, State, or local law enforcement agency, if the USPTO becomes aware of a violation or potential violation of law or regulation.

UNITED STATES PATENT AND TRADEMARK OFFICE

Commissioner for Patents
United States Patent and Trademark Office
P.O. Box 1450
Alexandria, VA 22313-1450
www.uspto.gov

In re Patent No. 6500006
Issue Date: December 31,2002
Application No. 09767130
Filed: January 22,2001
Attorney Docket No. 30895.1USD1

:DECISION GRANTING PETITION
:UNDER 37 CFR 1.378(c)

This is a decision on the electronic petition, filed December 22,2008 ,under 37 CFR 1.378(c) to accept the unintentionally delayed payment of the 3.5 year maintenance fee for the above-identified patent.

The petition is **GRANTED**.

The maintenance fee is accepted, and the above-identified patent reinstated as of December 22,2008 . This decision also constitutes notice that the fee has been accepted. An electronic copy of the petition and this decision has been created as an entry in the Image File Wrapper. Nevertheless, petitioner should print and retain an independent copy.

Telephone inquiries related to this electronic decision should be directed to the Electronic Business Center at 1-866-217-9197.

UNITED STATES PATENT AND TRADEMARK OFFICE

COMMISSIONER FOR PATENTS
UNITED STATES PATENT AND TRADEMARK OFFICE
WASHINGTON, DC 20231
www.uspto.gov

Paper No. 10

MAILED

FEB 1 8 2003

Technology Center 2600

CONLEY ROSE, P.C.
P. O. BOX 3267
HOUSTON TX 77253-3267

In re Application of :
Meng-Hsi Chiu :
Application No. 09/767,191 :
Filed: January 22, 2001 :
For: **INDEXING METHOD FOR MAPPING MULTIPLE SEGMENTS OF CODED FIELDS INTO A TABLE-STRUCTURE FIELD** :

DECISION ON REQUEST TO WITHDRAW AS ATTORNEY

This is a decision on the request to withdraw as attorney/agent of record filed on December 3, 2002.

A grantable request to withdraw as attorney/agent of record must:
(1) indicate the present mailing address of the attorney(s)/agent(s) who seek(s) to withdraw, and
(2) be signed by each attorney/agent seeking to withdraw or clearly be signed on their behalf, and
(3) be *approved* at least thirty (30) days prior to the maximum extendable period for response to any outstanding Office Action, and
(4) indicate the address to which future correspondence should be mailed.

Petitioner has met all of the above. Accordingly, the request is **GRANTED**.

All attorneys and agents of record associated with Customer No. 23505 are removed from record.

All future communications from the Office will be directed to the address listed below until otherwise notified by applicant. Applicant is reminded of the obligation to promptly notify the Patent and Trademark Office of any change in correspondence address to ensure receipt of all communications from the Office.

Krista Zele
Special Program Examiner
Technology Center 2600
Communications
(703) 305-4701

cc: Mr. Boreas Tsair Linne
Authority Inter. Intel. Proper Group Co.
6F-1 No. 67-1 Sec. 2
Yen-Pin N. Road
Taipei, Taiwan 103
R. O. C.

SPE RESPONSE FOR CERTIFICATE OF CORRECTION

DATE : ~~6/20/05~~ 7/24/06

Paper No.: ——

TO SPE OF : ART UNIT 2623

SUBJECT : Request for Certificate of Correction for Appl. No.: 9/767210 Patent No.: 6862364

Please respond to this request for a certificate of correction within 7 days.

Please review the requested changes/corrections as shown in the **COCIN** document(s) in the IFW application image. No new matter should be introduced, nor should the scope or meaning of the claims be changed.

Please complete the response (see below) and forward the completed response to scanning using document code **COCX**.

Virginia Tolbert

Certificates of Correction Branch

703-308-9390 ext. 113

Thank You For Your Assistance

The request for issuing the above-identified correction(s) is hereby:

Note your decision on the appropriate box.

- ☑ **Approved** — All changes apply.
- ☐ **Approved in Part** — Specify below which changes **do not** apply.
- ☐ **Denied** — State the reasons for denial below.

Comments: _____

JINGGE WU
SUPERVISORY PATENT EXAMINER

SPE — Art Unit

O.K. to enter. A.B.

OIPE JC139 MAY 2 3 2005 PATENT & TRADEMARK OFFICE

Cofe

03650.000152

PATENT

IN THE UNITED STATES PATENT AND TRADEMARK OFFICE

In re Patent of:	Examiner: A. Bhatnagar
ALEXANDER BERESTOV	Group Art Unit: 2623
Application No.: 09/767,210	
Filed: January 18, 2001	
For: STEREO IMAGE PROCESSING FOR RADIOGRAPHY	
U.S. Patent No.: 6,862,364	
Issued: March 1, 2005	May 20, 2005

Certificate
MAY 2 6 2005
of Correction

Commissioner for Patents
P.O. Box 1450
Alexandria, VA 22313-1450

CERTIFICATE OF CORRECTION UNDER RULE 322

Sir:

It is respectfully requested that a Certificate of Correction be issued by the Patent and Trademark Office due to errors which appear in the printed patent as a result of Patent and Trademark Office mistakes. A Certificate of Correction form, in duplicate, is enclosed.

Patentee's undersigned attorney may be reached in our Costa Mesa, California office by telephone at (714) 540-8700. All correspondence should continue to be directed to our address given below.

Respectfully submitted,

Michael K. O'Neill

Attorney for Patentee
Michael K. O'Neill
Registration No.: 32,622

FITZPATRICK, CELLA, HARPER & SCINTO
30 Rockefeller Plaza
New York, New York 10112-3800
Facsimile: (212) 218-2200

CA_MAIN 96564v1

JUN 1 2005

Form #29

Staple Here Only!

PRINTER'S TRIM LINE

UNITED STATES PATENT AND TRADEMARK OFFICE

CERTIFICATE OF CORRECTION

PATENT NO. : 6,862,364

DATED : March 1, 2005

INVENTOR(S) : Alexander Berestov

It is certified that error appears in the above-identified patent and that said Letters Patent is hereby corrected as shown below:

IN THE ABSTRACT

Line 1, "Xray" should read --X-ray--.

COLUMN 5

Line 6, "keystone)" should read --(keystone)--.

COLUMN 10

Line 66, "values $\{_i^1$ and $\{_i^2$," should read --values $\{x_i^1$ and $\{x_i^2$,--.

COLUMN 20

Line 67, "sub steps," should read --substeps,--.

MAILING ADDRESS OF SENDER:

FITZPATRICK, CELLA, HARPER & SCINTO
30 Rockefeller Plaza
New York, New York 10112-3800
(212) 218-2100 - Telephone
(212) 218-2200 - Facsimile

PATENT NO. 6,862,364

No. of add'l. copies @ 30¢ per page

Form PTO 1050 (Rev. 3-82)
(Form#30)
CA_MAIN 96566v1

JUN 1 2005

Staple Here Only!

PRINTER'S TRIM LINE

UNITED STATES PATENT AND TRADEMARK OFFICE

CERTIFICATE OF CORRECTION

PATENT NO. : 6,862,364

DATED : March 1, 2005

INVENTOR(S) : Alexander Berestov

It is certified that error appears in the above-identified patent and that said Letters Patent is hereby corrected as shown below:

IN THE ABSTRACT

Line 1, "Xray" should read --X-ray--.

COLUMN 5

Line 6, "keystone)" should read --(keystone)--.

COLUMN 10

Line 66, "values $\{_i^1$ and $\{_i^2$," should read --values $\{x_i^1$ and $\{x_i^2$,--.

COLUMN 20

Line 67, "sub steps," should read --substeps,--.

MAILING ADDRESS OF SENDER:

FITZPATRICK, CELLA, HARPER & SCINTO
30 Rockefeller Plaza
New York, New York 10112-3800
(212) 218-2100 - Telephone
(212) 218-2200 - Facsimile

PATENT NO. 6,862,364

No. of add'l. copies @ 30¢ per page

Form PTO 1050 (Rev. 3-82)
(Form#30)
CA_MAIN 96566v1

JUN 1 2005

UNITED STATES PATENT AND TRADEMARK OFFICE

COMMISSIONER FOR PATENTS
UNITED STATES PATENT AND TRADEMARK OFFICE
P.O. BOX 1450
ALEXANDRIA, VA 22313-1450
www.uspto.gov

Paper No. 15

OBLON, SPIVAK, McCLELLAND,
MAIER & NEUSTADT, P.C.
1940 Duke Street
Alexandria, VA 22314

MAILED

DEC 30 2003

OFFICE OF DIRECTOR
GROUP

In re Application of:
Takehiko Nomura et al.
Serial No.: 09/767,231
Filed: January22, 2001
For: SILICON PLATFORM FOR OPTICAL MODULES

DECISION *SUA SPONTE*
WITHDRAWING HOLDING
OF ABANDONMENT

This is a decision, *sua sponte*, withdrawing the holding of abandonment of the above-identified application.

A final Office action was mailed on January 14, 2003, setting a three-month shortened statutory period for response thereto. In an apparent failure to receive a response, the application was held abandoned and a Notice of Abandonment was mailed on November 6, 2003.

Although no petition or request to withdraw the holding of abandonment in this application has been filed, the Notice of Abandonment is hereby vacated, the holding of abandonment withdrawn and the application restored to pending status in view of the fact that the final Office action was not mailed to a proper correspondence address of record. The file record reveals that a change of address, filed August 12, 2002, for a different application was mistakenly associated with and processed for this application. This change of address incorrectly identifies the application number as that of this file but all other information, including the person signing the change of address, was clearly not for the instant application. The change of address was erroneously processed resulting in the final Office action being mailed to an incorrect address. Because the final Office action was not mailed to the correct address of record, applicant was not duly served notice that a reply to an Office action was required. The application is not abandoned in fact. Inconvenience to the applicant is regretted.

A revocation of power of attorney was filed November 19, 2003. The revocation of power of attorney and the new power of attorney has been accepted.

The application file is being forwarded to the technical support staff for remailing the final Office action. The shortened statutory period for response set therein will be reset to run from the date the action is remailed.

Any inquiry regarding this decision should be directed to Hien H. Phan, Special Program Examiner, at (703) 308-7502.

Janice A. Falcone, Group Director
Technology Center 2800
Semiconductors, Electrical and Optical
Systems and Components

PATENTS #3

MAILING CERTIFICATION

I hereby certify that this correspondence is being deposited with the United States Postal Service as first class mail in an envelope addressed to: Assistant Commissioner of Patents, Washington, D.C. 20231 on May 11, 2001

Bruce S. Londa

OIPE JC106
MAY 1 4 2001
PATENT & TRADEMARK OFFICE

IN THE UNITED STATES PATENT AND TRADEMARK OFFICE

Atty's Docket No. 101215-56

Applicant : Wolfgang Gries et al.

Appln. Number : 09/767,257

Filed : January 22, 2001

For : Arrangement for the Resonant Frequency Doubling of Multimode Laser Radiation (amended)

APPLICATION DEPARTMENT
Hon. Assistant Commissioner of Patents
Washington, D.C. 20231

Sir:

Applicant submits herewith the declaration required under 37 CFR 1.63. Please note, the corrections noted by the second inventor, Harald Kneipp attached to this declaration were made in the Preliminary Amendment filed April 5, 2001. The Notice of Missing Parts has not been received as yet.

Please charge the surcharge of $65.00, applicant being entitled to small entity status, to deposit account no. 14-1263.

Respectfully Submitted,

05/16/2001 NROCHA1 00000082 141263 09767257
01 FC:205 65.00 CH

Bruce S. Londa (33,531)
Attorney Applicant
Norris, McLaughlin & Marcus P.A.
220 East 42nd Street, 30th Floor
New York, N.Y. 10017
Telephone: (212)808-0700
Facsimile: (212)808-0844

OIPE JC106
MAY 1 4 2001
PATENT & TRADEMARK OFFICE

H-A-

03CO $
#3

Please type a plus sign (+) inside this box

PTO/SB/21 (08-00)
Approved for use through 10/31/2002. OMB 0651-0031
Patent and Trademark Office: U.S. DEPARTMENT OF COMMERCE

Under the Paperwork Reduction Act of 1995, no persons are required to respond to a collection of information unless it displays a valid OMB control number.

TRANSMITTAL FORM

(to be used for all correspondence after initial filing)

Application	09/767,257
Filing Date	January 22, 2001
First Named	Wolfgang Gries, et al.
Group Art Unit	TBA
Examiner Name	TBA
Attorney Docket Number	101215-56

Total Number of Pages in This Submission

ENCLOSURES *(check all that apply)*

- [X] Fee Transmittal Form
  - [ ] Fee Attached
- [ ] Amendment / Response
  - [ ] After Final
  - [ ] Affidavits/declaration(s)
- [ ] Extension of Time Request
- [ ] Express Abandonment Request
- [X] Information Disclosure Statement
- [X] Certified Copy of Priority Document(s)
- [ ] Response to Missing Parts/ Incomplete Application
  - [ ] Response to Missing Parts under 37 CFR 1.52 or 1.53
- [ ] Assignment Papers *(for an Application)*
- [ ] Drawing(s)
- [ ] Licensing-related Papers
- [ ] Petition
- [ ] Petition to Convert a Provisional Application
- [ ] Power of Attorney, Revocation Change of Correspondence
- [ ] Terminal Disclaimer
- [ ] Request for Refund
- [ ] CD, Number of CD(s) _____
- [ ] After Allowance Communication to Group
- [ ] Appeal Communication to Board of Appeals and Interferences
- [ ] Appeal Communication to Group *(Appeal Notice, Brief, Reply Brief)*
- [ ] Proprietary Information
- [ ] Status Letter
- [X] Other Enclosure(s) *(please identify below)*:

Combined Declaration and Power of Attorney with attachments - Notice of Missing Parts has not been received as yet

Remarks

SIGNATURE OF APPLICANT, ATTORNEY, OR AGENT

Firm *or* Individual name	Bruce S. Londa Norris, McLaughlin & Marcus P.A. 220 East 42nd Street, 30th Floor, New York, NY 10017
Signature	
Date	May 11, 2001

CERTIFICATE OF MAILING

I hereby certify that this correspondence is being deposited with the United States Postal Service with sufficient postage as first class mail in an envelope addressed to: Commissioner for Patents, Washington, D.C. 20231 on this date: May 11, 2001

Typed or printed name	Bruce S. Londa		
Signature		Date	May 11, 2001

Burden Hour Statement: This form is estimated to take 0.2 hours to complete. Time will vary depending upon the needs of the individual case. Any comments on the amount of time you are required to complete this form should be send to the Chief Information Officer, U. S. Patent and Trademark Office, Washington, DC 20231. DO NOT SEND FEES OR COMPLETED FORMS TO THIS ADDRESS. SEND TO: Assistant Commissioner for Patents, Washington, DC 20231.

PTO/SB/17 (11-00)
Approved for use through 10/31/2002. OMB 0651-0032
Patent and Trademark Office: U.S. DEPARTMENT OF COMMERCE
Under the Paperwork Reduction Act of 1995, no persons are required to r espond to a collection of information unless it displays a valid OMB control number.

FEE TRANSMITTAL for FY 2001

Patent fees are subject to annual revision.

TOTAL AMOUNT OF PAYMENT $65.00

Complete if Known	
Application Number	09/767,257
Filing Date	January 22, 2001
First Named Inventor	Wolfgang Gries et al.
Examiner Name	TBA
Group Art Unit	TBA
Attorney Docket No.	101215-56

OIPE JC106
MAY 14 2001
PATENT & TRADEMARK OFFICE

METHOD OF PAYMENT

1. ☒ The Commissioner is hereby authorized to charge indicated fees and credit any overpayments to:

Deposit Account Number: 14-1263

Deposit Account Name: Norris, McLaughlin & Marcus

☒ Charge Any Additional Fee Required Under 37 CFR §§ 1.16 and 1.17

☒ Applicant claims small entity status. See 37 CFR § 1.27

2. ☐ Payment Enclosed:

☐ Check ☐ Credit card ☐ Money Order ☐ Other

FEE CALCULATION

1. BASIC FILING FEE

Large Entity Fee Code	Large Entity Fee ($)	Small Entity Fee Code	Small Entity Fee ($)	Fee Description	Fee Paid
101	710	201	355	Utility filing fee	
106	320	206	160	Design filing fee	
107	490	207	245	Plant filing fee	
108	710	208	355	Reissue filing fee	
114	150	214	75	Provisional filing fee	
				SUBTOTAL (1)	

2. EXTRA CLAIM FEES

	Extra Claims			Fee from below	Fee Paid
Total Claims		-20** =	0	X	= 0.00
Independent Claims		- 3** =	0	X	= 0.00
Multiple Dependent					=

Large Entity Fee Code	Large Entity Fee ($)	Small Entity Fee Code	Small Entity Fee ($)	Fee Description
103	18	203	9	Claims in excess of 20
102	80	202	40	Independent claims in excess of 3
104	270	204	135	Multiple dependent claim, if not paid
109	80	209	40	** Reissue independent claims over original patent
110	18	210	9	** Reissue claims in excess of 20 and over original patent

SUBTOTAL (2) $0.00

**or number previously paid, if greater; For Reissues, see above

FEE CALCULATION (continued)

3. ADDITIONAL FEES

Large Entity Fee Code	Large Entity Fee ($)	Small Entity Fee Code	Small Entity Fee ($)	Fee Description	Fee Paid
105	130	205	65	Surcharge - late filing fee or oath	65.00
127	50	227	25	Surcharge - late provisional filing fee or cover sheet	
139	130	139	130	Non - English specification	
147	2,520	147	2,520	For filing a request for *ex parte* reexamination	
112	920*	112	920*	Requesting publication of SIR prior to Examiner action	
113	1,840*	113	1,840*	Requesting publication of SIR after Examiner action	
115	110	215	55	Extension for reply within first month	
116	390	216	195	Extension for reply within second month	
117	890	217	445	Extension for reply within third month	
118	1,390	218	695	Extension for reply within fourth month	
128	1,890	228	945	Extension for reply within fifth month	
119	310	219	155	Notice of Appeal	
120	310	220	155	Filing a brief in support of an appeal	
121	270	221	135	Request for oral hearing	
138	1,510	138	1,510	Petition to institute a public use proceeding	
140	110	240	55	Petition to revive - unavoidable	
141	1,240	241	620	Petition to revive - unintentional	
142	1,240	242	620	Utility issue fee (or reissue)	
143	440	243	220	Design issue fee	
144	600	244	300	Plant issue fee	
122	130	122	130	Petitions to the Commissioner	
123	50	123	50	Processing fee under 37 CFR § 1.17(q)	
126	180	126	180	Submission of Information Disclosure Statement	
581	40	581	40	Recording each patent assignment per property (times number of properties)	
146	710	246	355	Filing a submission after final rejection (37 CFR § 1.129(a))	
149	710	249	355	For each additional invention to be examined (37 CFR § 1.129(b))	
179	710	279	355	Request for Continued Examination (RCE)	
169	900	169	900	Request for expedited examination of a design application	

Other fee (specify) _____

*Reduced by Basic Filing Fee Paid

SUBTOTAL (3) $65.00

SUBMITTED BY				Complete (if applicable)	
Name (Print/Type)	Bruce S. Londa	Registration No. (Attorney/Agent)	33,531	Telephone	212-808-0700
Signature				Date	May 11, 2001

WARNING: Information on this form may become public. Credit card information should not be included on this form. Provide credit card information and authorization on

Burden Hour Statement: This form is estimated to take 0.2 hours to complete. Time will vary depending upon the needs of the individual case. Any comments on the amount of time you are required to complete this form should be sent to the Chief Information Officer, Patent and Trademark Office, Washington, DC 20231. DO NOT SEND FEES OR COMPLETED FORMS TO THIS ADDRESS. SEND TO: Assistant Commissioner for Patents, Washington, DC 20231.

UNITED STATES PATENT AND TRADEMARK OFFICE

Commissioner for Patents
United States Patent and Trademark Office
P.O. Box 1450
Alexandria, VA 22313-1450
www.uspto.gov

BROWN, RAYSMAN, MILLSTEIN, FELDER &
STEINER LLP
900 Third Avenue
New York, NY 10022

MAILED

SEP 1 4 2005

Technology Center 2100

In re Application of:
Brennan J. MCTERNAN, et al.
Application No. 09/767,268
Filed: April 6, 2005
For: SYSTEM AND METHOD FOR ACCOUNTING FOR VARIATIONS IN CLIENT CAPABILITIES IN THE DISTRIBUTION OF A MEDIA PRESENTATION

DECISION ON REQUEST TO WITHDRAW AS ATTORNEY OR AGENT

This is a decision on the Request to Withdraw from Representation filed April 06, 2005.

A grantable request to withdraw as attorney of record should indicate thereon the present mailing addresses of the attorney(s) who is/are withdrawing from the record and of the applicant. **A request to withdraw will not be approved unless at least 30 (thirty) days would remain between the date of approval and the later of the expiration date of a time to file a response or the expiration date of the maximum time period which can be extended under 37 C.F.R. § 1.136(a)**. The effective date of withdrawal being the date of decision and not the date of request. See M.P.E.P. § 402.06. 37 C.F.R. § 10.40(a) further requires that the applicant or patent owner be notified of the withdrawal of the attorney or agent.

A review of the file reveals that a non-final Office Action was mailed on August 13, 2004. Therefore, the time for response, including the maximum extendable period, to the Office action mailed on August 13, 2004 expired February 13, 2005. Accordingly, the request is **DENIED.**

Further communications will continue to be addressed to the address above.

For Vincent N. Trans
Special Program Examiner
Technology Center 2100
Computer Architecture, Software, and
Information Security
571-272-3613

MCCUTCHEN
MCCUTCHEN, DOYLE, BROWN & ENERSEN, LLP
ATTORNEYS AT LAW

1900 University Avenue
East Palo Alto, California 94303-2223
Tel. (650) 849-4400 Fax (650) 849-4800
http://www.mccutchen.com

San Francisco
Los Angeles
Walnut Creek

Palo Alto
Affiliate Office:
Taipei

FAX RECEIVED
FEB 0 1 2002
GROUP 1600

Fax Cover Page

OFFICIAL

Date: January 31, 2002

	Name	Fax	Phone
To:	Commissioner for Patents USPTO	703-872-9306	
From:	Michele Todd Wasmuth mwasmuth@mdbe.com	(650) 849-4800	(650) 849-4936

RECEIVED
FEB 0 8 2002
TECH CENTER 1600/2900

Pages (including this cover page): 5

Subject: U.S. Patent Application Serial No. 09/767,283
Filing Date: January 22, 2001
Title: THERAPEUTIC APPLICATION OF PRO-APOPTOTIC BENZODIAZEPINES
Docket No. UM 2038.02

Message:

Fax Cover Sheet (1 pg.)
Transmittal Form (1 pg.)
Fee Transmittal Form (1 pg.)
Petition to Correct Inventorship (2 pgs.)

RECEIVED
FEB -4 2002
TECHNOLOGY CENTER 2800

For transmission problems, please call (650) 849-4825

Caution – Confidential
The information in this fax is confidential and may also be privileged attorney-client information and attorney work product. It is intended only for the recipient(s) named above. If you aren't a named recipient or his/her authorized representative, any reading, use, copying or disclosure of this fax is strictly prohibited. If you aren't a named recipient, please call the above number (collect) now and return this fax to us by mail at the above address. Thank you.

RECEIVED
FEB 0 8 2002
TECH CENTER 1600/2900

Please type a plus sign (+) inside this box ™ [+]

PTO/SB/21 (08-00)
Approved for use through 10/31/02. OMB 0651-0031
U.S. Patent and Trademark Office; U.S. DEPARTMENT OF COMMERCE

Under the Paperwork Reduction Act of 1995, no persons are required to respond to a collection of information unless it displays a valid OMB control number.

TRANSMITTAL FORM

(to be used for all correspondence after initial filing)

Total Number Of Pages In This Submission: 4

Application Number	09/767,283
Filing Date	January 22, 2001
First Named Inventor	Gary D. GLICK
Group Art Unit	1614
Examiner Name	Unassigned
Attorney Docket No.	UM 2038.02

ENCLOSURES (check all that apply)

- [x] Fee Transmittal Form
  - [ ] Fee Attached
- [ ] Amendment / Reply
  - [ ] After Final
  - [ ] Affidavits/declarations
- [ ] Extension of Time Request
- [ ] Express Abandonment Request
- [ ] Information Disclosure Statement
- [ ] Certified Copy of Priority Document(s)
- [ ] Response to Missing Parts/ Incomplete Application
  - [ ] Response to Missing Parts under 37 CFR 1.52 or 1.53
- [ ] Assignment Papers *(for an Application)*
- [ ] Drawing(s)
- [ ] Licensing-related Papers
- [x] Petition to Correct Inventorship
- [ ] Petition to Convert to a Provisional Application
- [ ] Power of Attorney, Revocation Change of Correspondence Address
- [ ] Terminal Disclaimer
- [ ] Request for Refund
- [ ] CD, Number of CD(s)_____
- [ ] After Allowance Communication to Group
- [ ] Appeal Communication to Board of Appeals and Interferences
- [ ] Appeal Communication to Group *(Appeal Notice, Brief, Reply Brief)*
- [ ] Proprietary Information
- [ ] Status Letter
- [ ] Other Enclosure(s) *(please identify below):*

Remarks

SIGNATURE OF APPLICANT, ATTORNEY OR AGENT

Firm or Individual Name	Antoinette F. Konski Michele Todd Wasmuth McCutchen, Doyle, Brown & Enersen, LLP Three Embarcadero Center, Suite 1800 San Francisco, CA 94111
Signature	Michele Todd Wasmuth
Date	1/31/2002

CERTIFICATE OF MAILING/TRANSMISSION

I hereby certify that this paper and all enclosures are being sent via facsimile on the date indicated below to the attention to the Commissioner for Patents at Facsimile No. (703) 872-9306 at 4:55 a.m./p.m.

Date: January 31, 2002 Name: Kum Lim

Burden Hours Statement: This form is estimated to take 0.2 hours to complete. Time will vary depending upon the needs of the individual case. Any comments on the amount of time you are required to complete this form should be sent to the Chief Information Officer, U.S. Patent and Trademark Office, Washington, DC 20231. DO NOT SEND FEES OR COMPLETED FORMS TO THIS ADDRESS. SEND TO: Commissioner for Patents, Box Patent Application, Washington, DC 20231.

Received from < > at 1/31/02 7:52:26 PM [Eastern Standard Time]

#5
2-12-02
NW

UM 2038.02

Certificate of Mailing/Transmission (37 C.F.R. § 1.8(a)):

[X] Pursuant to 37 C.F.R. § 1.6(d), I hereby certify that this paper and all enclosures are being sent via facsimile on the date indicated below to the attention to the Commissioner for Patents at Facsimile No. (703) 872-9306 at 4:55 a.m. (p.m.)

Dated: January 31, 2002 Name of Person Certifying: _____
Printed Name: Kum Lim

IN THE UNITED STATES PATENT AND TRADEMARK OFFICE

In re Application for:

Gary D. GLICK

Application Serial No.: 09/767,283

Filing Date: January 22, 2001

Title: THERAPEUTIC APPLICATION OF PRO-APOPTOTIC BENZODIAZEPINES

Examiner: Unassigned

Group Art Unit: 1614

RECEIVED
FEB 0 8 2002
TECH CENTER 1600/2900

Commissioner for Patents
Washington, D.C. 20231

PETITION TO CORRECT INVENTORSHIP PURSUANT TO 37 C.F.R. § 1.48(b)

ORIGINAL SUBMISSION

1. The above-identified application was filed on January 22, 2001. At the time of original submission, Gary D. GLICK and Anthony W. OPIPARI, Jr. were named as co-inventors on the application.

CORRECT INVENTOR(S)

2. The actual inventor(s) for this application is Gary D. GLICK.

02/12/2002 MVILLARI 00000004 501189 09767283
01 FC:122 130.00 CH

Received from < > at 1/31/02 7:52:26 PM [Eastern Standard Time]

PETITION

3. Applicant hereby petitions, in accordance with 37 C.F.R. §1.48(b) for the correction of the inventorship for this application. In support of this Petition, Applicant's undersigned attorney, on behalf of Applicant, hereby declares that Anthony W. Opipari, Jr.'s invention is no longer being claimed in the above-identified application. Therefore, Applicant petitions for inventorship to be corrected to reflect that Gary D. Glick is the sole inventor of the currently claimed invention.

FEES

4. The petition fee of $130.00 (C.F.R. §1.17(i)) is paid as follows:

[X] Please charge the Petition Fee of $130.00 to Account No. **50-1189**, Billing Reference **23980-7028**. *A duplicate copy of this request is attached.*

[X] Charge any additional required fees, or credit any overpayment to Account No. **50-1189**, Billing Reference **23980-7028**. *A duplicate of this request is attached.*

5. If the Office of Petition determines that this petition cannot be granted or has any questions regarding this matter, a representative is respectfully requested to call the undersigned at (650) 849-4950.

Date: January 31, 2002

Respectfully submitted,

By: Antoinette F. Konski

Antoinette F. Konski
Reg. No. 34,202

Michele Todd Wasmuth
Reg. No. 43,239

McCutchen, Doyle, Brown & Enersen, LLP
Three Embarcadero Center, Suite 1800
San Francisco, California 94111
Telephone: (650) 849-4950
Facsimile: (650) 849-4800

Received from < > at 1/31/02 7:52:26 PM [Eastern Standard Time]

UNITED STATES PATENT AND TRADEMARK OFFICE

Commissioner for Patents
United States Patent and Trademark Office
Washington, D.C. 20231
www.uspto.gov

Paper No. 6

BLAKELY SOKOLOFF TAYLOR & ZAFMAN LLP
12400 WILSHIRE BOULEVARD
SEVENTH FLOOR
LOS ANGELES, CA 90025-1030

COPY MAILED

MAY 1 4 2003

OFFICE OF PETITIONS

In re Application of	:	
Alain S. Rossmann et al	:	
Application No. 09/767,324	:	DECISION GRANTING PETITION
Filed: January 22, 2001	:	UNDER 37 CFR 1.137(f)
Attorney Docket No. 3399P038	:	

This is a decision on the petition, filed April 29, 2003, to revive the instant nonprovisional application under the unintentional provisions of 37 CFR 1.137(f).

The petition is **GRANTED**.

Petitioner states that the instant nonprovisional application is the subject of an application filed in a foreign country on January 14, 2002. However, the U.S. Patent and Trademark Office was unintentionally not notified of this filing within 45 days subsequent to the filing of the subject application in a foreign country.

In view of the above, this application became abandoned pursuant to 35 U.S.C. § 122(b)(2)(B)(iii) and 37 CFR 1.213(c) for failure to timely notify the Office of the filing of an application in a foreign country, or under a multilateral international agreement, that requires publication of applications 18 months after filing.

A petition under 37 CFR 1.137(f) must be accompanied by:

(1) the reply which is met by the notification of such filing in a foreign country or under a multinational treaty;

(2) the petition fee as set forth in 37 CFR 1.17(m); and

(3) a statement that the entire delay in filing the required reply from the due date of the reply until the filing of a grantable petition was unintentional.

The instant petition has been found in compliance with 37 CFR 1.137(f). Accordingly, the failure to timely notify the Office of a foreign or international filing within 45 days as provided by 35 U.S.C. § 122(b)(2)(B)(iii) is accepted as having been unintentionally delayed.

The previous Request and Certification under 35 U.S.C. § 122(b)(2)(B)(i) has been rescinded. A Notice Regarding Rescission of Nonpublication Request which sets forth the projected publication date of August 21, 2003 accompanies this decision on petition.

Any inquiries concerning this decision may be directed to the undersigned at (703) 305-8680.

This application is being forwarded to Technology Center Art Unit 2176 for examination in due course.

Frances Hicks

Frances Hicks
Petitions Examiner
Office of Petitions
Office of the Deputy Commissioner
for Patent Examination Policy

ATTACHMENT: Notice Regarding Rescission of Nonpublication Request

UNITED STATES PATENT AND TRADEMARK OFFICE

COMMISSIONER FOR PATENTS
UNITED STATES PATENT AND TRADEMARK OFFICE
P.O. BOX 1450
ALEXANDRIA, VA 22313-1450
www.uspto.gov

MARTINE PENILLA & GENCARELLA, LLP
710 LAKEWAY DRIVE
SUITE 200
SUNNYVALE, CA 94085

COPY MAILED

JUL 0 5 2006

OFFICE OF PETITIONS

In re Application of :
Adolfo P. Vide :
Application No. 09/767,331 :
Filed: January 22, 2001 :
Attorney Docket No. 04324.P038 :

ON PETITION

This is a decision on the petition, filed January 20, 2006, to revive the above-identified application under the provisions of 37 CFR 1.137(b).

There is no indication that the person signing the instant petition was ever given a power of attorney or authorization of agent to prosecute the above-identified application. However, in accordance with 37 CFR 1.34(a), the signature of Steve J. Munson appearing on the petition shall constitute a representation to the United States Patent and Trademark Office that he is authorized to represent the particular party on whose behalf he acts. A courtesy copy of this decision is being mailed to petitioner. However, if Mr. Munson desires to receive future correspondence regarding this application, the appropriate power of attorney or authorization of agent must be submitted. All future correspondence regarding this application file will be directed solely to the address of record.

The above-identified application became abandoned for failure to respond in a timely manner to the Notice of Allowability mailed April 4, 2005. A Notice of Abandonment was mailed on November 21, 2005. In response, on January 20, 2006, the present petition was filed.

The petition satisfies the requirements of 37 CFR 1.137(b) in that petitioner has supplied (1) the reply in the form of corrected drawings; (2) the petition fee of $1,500; and (3) an adequate statement of unintentional delay. Accordingly, the petition is **GRANTED**.

The application is being referred to the Office of Publications to oversee the review of the drawing filed January 20, 2006.

Telephone inquires related to this decision may be directed to the undersigned at (571) 272-3204. Status inquires related to processing at Publishing Division should be directed to (571) 272-4200.

Sherry D. Brinkley
Petitions Examiner
Office of Petitions

cc: STEVE J. MUNSON
BERKELEY LAW & TECHNOLOGY GROUP
1700 NW 167TH PLACE
SUITE 240
BEAVERTON, OR 97006

UNITED STATES PATENT AND TRADEMARK OFFICE

Commissioner for Patents
United States Patent and Trademark Office
P.O. Box 1450
Alexandria, VA 22313-1450
www.uspto.gov

LUCENT TECHNOLOGIES INC.
DOCKET ADMINISTRATOR
101 CRAWFORDS CORNER ROAD – ROOM 3J-219
HOLMDEL, NJ 07733

COPY MAILED

DEC 14 2004

OFFICE OF PETITIONS

In re Application of :
Bhatoolaul et al. :
Application No. 09/767,332 :
Filed: January 23, 2001 :
Attorney Docket No. 14-28-6-1-19 :

ON PETITION

This is a decision on the petition under 37 C.F.R. § 1.137(b), filed November 1, 2004, to revive the above-identified application.

The petition is **GRANTED.**

This application became abandoned for failure to timely reply to the final Office action mailed April 13, 2004. A two-month extension of time under the provisions of 37 CFR 1.136(a) was obtained. Accordingly, this application became abandoned on September 14, 2004. A Notice of Abandonment was mailed November 3, 2004.

Petitioner has met the requirements to revive the above-identified application pursuant to 37 CFR 1.137(b).

This matter is being referred to Technology Center 2600 for processing of the Request for Continued Examination under 37 CFR 1.114 filed with the instant petition.

Telephone inquiries regarding this decision should be directed to the undersigned at (571) 272-3282.

Liana Chase

Liana Chase
Petitions Examiner
Office of Petitions
Office of the Deputy Commissioner
for Patent Examination Policy

UNITED STATES PATENT AND TRADEMARK OFFICE

Commissioner for Patents
United States Patent and Trademark Office
P.O. Box 1450
Alexandria, VA 22313-1450
www.uspto.gov

Paper No.

LAHIVE & COCKFIELD, LLP
ONE POST OFFICE SQUARE
BOSTON MA 02109-2127

COPY MAILED

APR 15 2008

OFFICE OF PETITIONS

In re Application of
Jeffrey Browning et al.
Application No. 09/767,370
Filed: January 23, 2001
Attorney Docket Number: BGN-A054RCE2
Title: METHOD FOR THE HIGH LEVEL EXPRESSION OF ACTIVE LYMPHOTOXIN-BETA RECEPTOR IMMUNOGLOBULIN CHIMERIC PROTEINS AND THEIR PURIFICATION

DECISION ON PETITION PURSUANT TO 37 C.F.R. § 1.181(A)

This is a decision on the petition filed on January 15, 2008, pursuant to 37 C.F.R. § 1.181(a).

The above-identified application became abandoned for failure to reply within the meaning of 37 C.F.R § 1.113 in a timely manner to the final Office action mailed June 11, 2007, which set a shortened statutory period for reply of three months. No extensions of time under the provisions of 37 C.F.R § 1.136(a) were obtained, and no response was received. Accordingly, the above-identified application became abandoned on September 12, 2007. A notice of abandonment was mailed on January 9, 2008.

With this petition, Petitioner has alleged that a three-month extension of time, a notice of appeal, and the fee that is associated with the filing of a notice of appeal was submitted to the Office on December 11, 2007. Petitioner has submitted, *inter alia*, a notice of appeal, a petition for a three-month extension of time, and a postcard receipt that indicates that both the notice of appeal and the petition for a three-month extension of time were received in the Office of Initial Patent Examination on December 11, 2007. As such, it is clear that a

response was timely received on that date, and subsequently misplaced in the Office.

Moreover, Office records indicate that both the fee that is associated with the filing of a notice of appeal and the fee that is associated with the filing of a petition for a three-month extension of time were received in the Office on December 11, 2007.

Considering the facts and circumstances of the delay at issue, as set forth on petition, it is concluded that Petitioner has met his burden of establishing that this submission was timely received, and subsequently misplaced in the Office.

Accordingly, the petition under 37 C.F.R. § 1.181(a) is **GRANTED**. The holding of abandonment is **WITHDRAWN**

The Technology Center will be notified of this decision. The Technology Center's support staff will notify the Examiner of this decision, so that the present application can receive further processing in due course.

The Notice of Appeal filed on December 11, 2007, has been entered and made of record. Accordingly, **the two-month period for filing the Appeal Brief accompanied by the fee required by law runs from the mailing date of this decision.**

Telephone inquiries regarding *this decision* should be directed to the undersigned at (571) 272-3225[1]. All other inquiries concerning examination procedures or status of the application should be directed to the Technology Center.

/Paul Shanoski/
Paul Shanoski
Senior Attorney
Office of Petitions

---

1 Petitioner will note that all practice before the Office should be in writing, and the action of the Office will be based exclusively on the written record in the Office. See 37 C.F.R. § 1.2. As such, Petitioner is reminded that no telephone discussion may be controlling or considered authority for any further action(s) of Petitioner.

UNITED STATES PATENT AND TRADEMARK OFFICE

Commissioner for Patents
United States Patent and Trademark Office
P.O. Box 1450
Alexandria, VA 22313-1450
www.uspto.gov

BAKER BOTTS L.L.P.
2001 ROSS AVENUE
SUITE 600
DALLAS, TX 75201-2980

COPY MAILED

DEC 1 4 2009

OFFICE OF PETITIONS

In re Application of	:	
Thompson et al.	:	
Application No. 09/767,374	:	DECISION ON PETITION
Filed: January 22, 2001	:	
Attorney Docket No. 062891.2756	:	

This is a decision on the petition, filed October 14, 2009, which is being treated as a petition under 37 CFR 1.181 (no fee) requesting withdrawal of the holding of abandonment in the above-identified application.

The petition is **GRANTED**.

This application was held abandoned for failure to reply to the Non Final Office action mailed October 6, 2008, which set a three (3) month shortened statutory period for reply. A Notice of Abandonment was mailed on April 14, 2009.

Petitioner asserts that the Office action dated October 6, 2008 was not received, since the Office mailed the communication to wrong correspondence address. Petitioner alleges that a proper revocation and appointment of new power of attorney, including a change of correspondence address was filed on July 7, 2008. Accordingly, petitioner request that the abandonment be withdrawn.

A review of the written record does indicate an irregularity in the mailing of the Office action of October 6, 2008. In this regard, the Office received the revocation and power of attorney, including the change of correspondence address on July 7, 2008, which was prior to the mailing of the Office action of October 6, 2008. Accordingly, as the Office action was mailed to an incorrect address, the Notice of Abandonment mailed April 14, 2009 is hereby vacated.

In view of the above, the holding of abandonment is hereby withdrawn.

This application is being referred to the Technology Center technical support staff of Art Unit 2452 for remailing the Office action of October 6, 2008 and resetting the period for reply.

The Power of Attorney filed July 7, 2008, is hereby accepted and made of record. The Notice of Acceptance of Power of Attorney is enclosed.

Telephone inquiries concerning this decision should be directed to Alicia Kelley at (571) 272-6059.

Chris Bottorff
Petitions Examiner
Office of Petitions

Enclosed: Notice of Acceptance of Power of Attorney

UNITED STATES PATENT AND TRADEMARK OFFICE

UNITED STATES DEPARTMENT OF COMMERCE
United States Patent and Trademark Office
Address: COMMISSIONER FOR PATENTS
P.O. Box 1450
Alexandria, Virginia 22313-1450
www.uspto.gov

APPLICATION NUMBER	FILING OR 371(C) DATE	FIRST NAMED APPLICANT	ATTY. DOCKET NO./TITLE
09/767,374	01/22/2001	James Thompson	WAYPORT.06300US

CONFIRMATION NO. 2543

POA ACCEPTANCE LETTER

5073
BAKER BOTTS L.L.P.
2001 ROSS AVENUE
SUITE 600
DALLAS, TX 75201-2980

OC000000039183510

Date Mailed: 12/11/2009

NOTICE OF ACCEPTANCE OF POWER OF ATTORNEY

This is in response to the Power of Attorney filed 07/07/2008.

The Power of Attorney in this application is accepted. Correspondence in this application will be mailed to the above address as provided by 37 CFR 1.33.

/atkelley/

Office of Data Management, Application Assistance Unit (571) 272-4000, or (571) 272-4200, or 1-888-786-0101

UNITED STATES PATENT AND TRADEMARK OFFICE

Commissioner for Patents
United States Patent and Trademark Office
P.O. Box 1450
Alexandria, VA 22313-1450
www.uspto.gov

J C PATENTS
4 VENTURE, SUITE 250
IRVINE CA 92618

MAILED

MAY 2 1 2010

OFFICE OF PETITIONS

In re Application of	:	
Ivan WU et al.	:	
Application No. 09/767,390	:	DECISION ON PETITION
Filed: January 23, 2001	:	
Attorney Docket No. JCLA6877	:	

This is a decision on the petitions, filed May 01, 2008, which is being treated as a request under 37 CFR 3.81(b)[1] to correct the assignee's name on the Fee(s) Transmittal form PTOL-85(b) so that the Letters Patent will issue to the assignee.

The request is **DISMISSED**.

Petitioner states that the correct assignee's name is "Au Optronics Corporation", and that Unipac Optoelectronics Corp. was incorrectly included on the Part B - Fee(s) Transmittal form at the time of payment of the issue fee. Accordingly, petitioner requests that the patent issue to "Au Optronics Corporation".

37 CFR 3.81(b), effective June 25, 2004, reads:

> ***After payment of the issue fee:*** **Any request for issuance of an application in the name of the assignee submitted after the date of payment of the issue fee, and any request for a patent to be corrected to state the name of the assignee, must state that the assignment was submitted for recordation as set forth in § 3.11 before issuance of the patent, and must include a request for a certificate of correction under § 1.323 of this chapter (accompanied by the fee set forth in § 1.20(a)) and the processing fee set forth in § 1.17(i) of this chapter.**

[1] *See* MPEP 1309, subsection II and Official Gazette of June 22, 2004

A petition under 37 CFR 3.81(b) along with the $130.00 processing fee set forth in 37 CFR 1.17(i) is required to correct applicant's error, before issuance of a Certificate of Correction, under 37 CFR 1.323.

The petitioner has failed to comply with the provisions of 37 CFR 3.81(b), the request cannot be granted at this time.

Inquiries concerning this decision should be directed to Michelle R. Eason at (571) 272-4231. Any questions concerning issuance of a certificate of correction should be directed to the Certificates of Correction Branch at (571) 272-4200.

Thurman K. Page
Petitions Examiner
Office of Petitions

UNITED STATES PATENT AND TRADEMARK OFFICE

Commissioner for Patents
United States Patent and Trademark Office
P.O. Box 1450
Alexandria, VA 22313-1450
www.uspto.gov

J C PATENTS
4 VENTURE, SUITE 250
IRVINE CA 92618

MAILED

JUN 2 1 2010

OFFICE OF PETITIONS

In re Patent No. 7,336,331	:	
Issue Date: February 26, 2008	:	
Application No. 09/767,390	:	DECISION ON PETITION
Filed: January 23, 2001	:	
Attorney Docket No. JCLA6877	:	

This is a decision on the renewed petition filed May 26, 2010, which is being treated as a request under 37 CFR 3.81(b)[1] to correct the name of the assignee on the front page of the above-identified patent by way of a Certificate of Correction.

The request is **GRANTED**.

Telephone inquiries concerning this decision may be directed to Michelle R. Eason at (571) 272-4231. Inquiries regarding the issuance of a certificate of correction should be directed to the Certificate of Correction Branch at (571) 272-4200.

The Certificates of Correction Branch will be notified of this decision granting the petition under 37 CFR 3.81(b) and directing issuance of the requested Certificate of Correction.

Thurman K. Page
Petitions Examiner
Office of Petitions

---

[1] *See* MPEP 1309, subsection II; and Official Gazette of June 22, 2004.

UNITED STATES PATENT AND TRADEMARK OFFICE

COMMISSIONER FOR PATENTS
UNITED STATES PATENT AND TRADEMARK OFFICE
WASHINGTON, D.C. 20231
www.uspto.gov

Paper No. 6

COPY MAILED

OCT 3 0 2001

OFFICE OF PETITIONS

RICHARD F. JAWORSKI
COOPER & DUNHAM LLP
1185 AVENUE OF THE AMERICAS
NEW YORK, NY 10036

In re Application of
Charles F. Spitz
Application No. 09/767,398
Filed: January 23, 2001
Attorney Docket No. 0655/62341

DECISION GRANTING PETITION

This is a decision on the paper styled "Second Request for Correcred Filing Receipt" filed July 5, 2001, which is being treated as a petition under 37 CFR 1.10(c), requesting that the above-identified application be accorded a filing date of January 23, 2001, instead of the presently accorded date of January 22, 2001.

Petitioner alleges that the application was deposited in "Express Mail" service with the U. S. Postal Service, on January 23, 2001. In support, petitioner provides a copy of the Express Mail label, receipt no. EM169951944US and a copy of the USPS Track/Confirm system information for the same receipt number showing that the Express Mail package in question was accepted on January 23, 2001. It is noted that while the "date in" on the copy of the Express Mail receipt is not legible, it includes a USPS receipt stamp dated January 23, 2001.

The Office considers the date the paper or fee is shown to have been deposited as "Express Mail" to be the "Date In" on the Express Mail label, MPEP 513. That is the date that verifies that the package was actually mailed. In view of the above, the evidence is convincing that the application was deposited as "Express Mail" with the US Postal Service on January 23, 2001.

PTO records have been corrected to show a filing date of **January 23, 2001**. A Corrected Official Filing Receipt is attached.

The petition is granted.

The application is being returned to Technology Center Art Unit 2132, with a filing date of January 23, 2001.

Telephone inquiries concerning this matter should be directed to the undersigned at (703)305-9220.

Sherry D. Brinkley
Petitions Examiner
Office of Petitions
Office of the Deputy Assistant Commissioner
for Patent Policy and Projects

Attachment: Corrected Filing Receipt

UNITED STATES PATENT AND TRADEMARK OFFICE

COMMISSIONER FOR PATENTS
UNITED STATES PATENT AND TRADEMARK OFFICE
P.O. BOX 1450
ALEXANDRIA, VA 22313-1450
www.uspto.gov
DIW Sep-05

JOHN D. GUGLIOTTA, P.E., ESQ.
202 DELAWARE BUILDING
137 SOUTH MAIN STREET
AKRON OH 44308

COPY MAILED

SEP 27 2005

OFFICE OF PETITIONS

In re Application of	:	
Cassell et al.	:	
Application No. 09/767,413	:	ON PETITION
Filed: 23 January, 2001	:	
Atty Docket No. 887	:	

This is a decision on the petition under 1.137(b),[1] filed on 24 August, 2005, to revive the above-identified application.

The petition is **DISMISSED**.

Any request for reconsideration of this decision must be submitted within TWO (2) MONTHS from the mail date of this decision. Extensions of time under 37 CFR 1.136(a) are permitted. The reconsideration request should include a cover

---

[1]Effective December 1, 1997, the provisions of 37 CFR 1.137(b) now provide that where the delay in reply was unintentional, a petition may be filed to revive an abandoned application or a lapsed patent pursuant to 37 CFR 1.137(b). A grantable petition filed under the provisions of 37 CFR 1.137(b) must be accompanied by:

(1) the required reply, unless previously filed. In a nonprovisional application abandoned for failure to prosecute, the required reply may be met by the filing of a continuing application. In a nonprovisional application filed on or after June 8, 1995, and abandoned for failure to prosecute, the required reply may also be met by the filing of a request for continued examination in compliance with § 1.114. In an application or patent, abandoned or lapsed for failure to pay the issue fee or any portion thereof, the required reply must be the payment of the issue fee or any outstanding balance thereof. In an application abandoned for failure to pay the publication fee, the required reply must include payment of the publication fee.

(2) the petition fee as set forth in 37 CFR 1.17(m);

(3) a statement that the entire delay in filing the required reply from the due date for the reply until the filing of a grantable petition pursuant to 37 CFR 1.137(b) was unintentional. The Commissioner may required additional information where there is a question whether the delay was unintentional; and

(4) any terminal disclaimer (and fee as set forth in 37 CFR 1.20(d)) required pursuant to 37 CFR 1.137(c)).

letter entitled "Renewed Petition under 37 CFR 1.137(b)." This is not a final agency decision.

This application became abandoned on 8 April, 2005, for failure to properly to the final Office action mailed on 7 January, 2005, which set a three (3) month shortened statutory period for reply. No extensions of time under 37 CFR 1.136(a) were obtained. The filing of the present petition precedes the mailing of Notice of Abandonment.

The petition lacks the statement required by 37 CFR 1.137(b)(3). Specifically, Pages 2 and 3 of the petition form, including the statement that the entire delay, from the due date for the reply until the filing of a grantable petition pursuant to 37 CFR 1.137(b), was unintentional, cannot be located with the papers received on 24 August, 2005. As such, petitioners should supply a copy of Pages 2 and 3 of the petition.

The petition is therefore dismissed without prejudice to reconsideration pending receipt of a complete petition.

Further correspondence with respect to this matter should be addressed as follows:

By mail: Mail Stop PETITIONS
Commissioner for Patents
Post Office Box 1450
Alexandria, VA 22313-1450

By hand: Customer Service Window
Mail Stop Petitions
Randolph Building
401 Dulany Street
Alexandria, VA 22314

By fax: (571) 273-8300
ATTN: Office of Petitions

Telephone inquiries concerning this matter may be directed to the undersigned at (571)272-3231.

D Wood

Douglas I. Wood
Senior Petitions Attorney
Office of Petitions

UNITED STATES PATENT AND TRADEMARK OFFICE

COMMISSIONER FOR PATENTS
UNITED STATES PATENT AND TRADEMARK OFFICE
P.O. BOX 1450
ALEXANDRIA, VA 22313-1450
www.uspto.gov
DIW Oct-05

JOHN D. GUGLIOTTA, P.E., ESQ.
202 DELAWARE BUILDING
137 SOUTH MAIN STREET
AKRON OH 44308

COPY MAILED

OCT 21 2005

OFFICE OF PETITIONS

In re Application of	:	
Cassell et al.	:	
Application No. 09/767,413	:	ON PETITION
Filed: 23 January, 2001	:	
Atty Docket No. 887	:	

This is a decision on the renewed petition under 1.137(b),[1] filed on 7 October, 2005, to revive the above-identified application.

The petition is **GRANTED**.

---

[1]Effective December 1, 1997, the provisions of 37 CFR 1.137(b) now provide that where the delay in reply was unintentional, a petition may be filed to revive an abandoned application or a lapsed patent pursuant to 37 CFR 1.137(b). A grantable petition filed under the provisions of 37 CFR 1.137(b) must be accompanied by:

(1) the required reply, unless previously filed. In a nonprovisional application abandoned for failure to prosecute, the required reply may be met by the filing of a continuing application. In a nonprovisional application filed on or after June 8, 1995, and abandoned for failure to prosecute, the required reply may also be met by the filing of a request for continued examination in compliance with § 1.114. In an application or patent, abandoned or lapsed for failure to pay the issue fee or any portion thereof, the required reply must be the payment of the issue fee or any outstanding balance thereof. In an application abandoned for failure to pay the publication fee, the required reply must include payment of the publication fee.

(2) the petition fee as set forth in 37 CFR 1.17(m);

(3) a statement that the entire delay in filing the required reply from the due date for the reply until the filing of a grantable petition pursuant to 37 CFR 1.137(b) was unintentional. The Commissioner may required additional information where there is a question whether the delay was unintentional; and

(4) any terminal disclaimer (and fee as set forth in 37 CFR 1.20(d)) required pursuant to 37 CFR 1.137(c)).

This application became abandoned on 8 April, 2005, for failure to properly to the final Office action mailed on 7 January, 2005, which set a three (3) month shortened statutory period for reply. No extensions of time under 37 CFR 1.136(a) were obtained. The petition filed on 24 August, 2005, was dismissed on 27 September, 2005. Notice of Abandonment was mailed on 3 October, 2005.

Petitioner has filed a Notice of Appeal as the required reply.

The Notice of Appeal filed 24 August, 2005, has been entered and made of record. Accordingly, the two (2)-month period for filing the Appeal Brief, in triplicate, accompanied by the fee required by law, runs from the date of this decision.

The application will be referred to Technology Center Art Unit 2632 for further processing.

Telephone inquiries concerning this matter may be directed to the undersigned at (571)272-3231.

D Wood

Douglas I. Wood
Senior Petitions Attorney
Office of Petitions

UNITED STATES PATENT AND TRADEMARK OFFICE

Commissioner for Patents
United States Patent and Trademark Office
Washington, D.C. 20231
www.uspto.gov

Paper No. 6

John H. D' Antico
Brobeck, Phleger & Harrison LLP
4801 Plaza on the Lake
Austin, TX 78746

COPY MAILED

FEB 5 2002

OFFICE OF PETITIONS

In re Application of :
Schroeder et al. :
Application No. 09/767,422 :
Filed: January 19, 2001 :
Attorney Docket No. 030633.0010 :

ON PETITION

This is a decision on the petition filed November 13, 2001, to accord the above-identified application a filing date of January 19, 2001, instead of January 22, 2001.

The petition is **granted**.

37 CFR § 1.10(e) states:

> Any person mailing correspondence addressed as set out in Section 1.1(a) to the Office with sufficient postage utilizing the "Express Mail Post Office to Addressee" service of the USPS but not received by the Office, may petition the Commissioner to consider such correspondence filed in the Office on the USPS deposit date, provided that:
> (1) The petition is filed promptly after the person becomes aware that the Office has no evidence of receipt of the correspondence;
> (2) The number of the "Express Mail" mailing label was placed on the paper(s) or fee(s) that constitute the correspondence prior to the original mailing by "Express Mail";
> (3) The petition includes a copy of the originally deposited paper(s) or fee(s) that constitute the correspondence showing the number of the "Express Mail" mailing label thereon, a copy of any returned postcard receipt, a copy of the "Express Mail" mailing label showing the "date-in," a copy of any other official notation by the USPS relied upon to show the date of deposit, and, if the requested filing date is a date other than the "date-in" on the "Express Mail" mailing label or other official notation entered by the USPS, a showing pursuant to paragraph (d)(3) of this section that the requested filing date was the date the correspondence was deposited in the "Express Mail Post Office to Addressee" service prior to the last scheduled pickup for that day; and
> (4) The petition includes a statement which establishes, to the satisfaction of the Commissioner, the original deposit of the correspondence and that the copies of the correspondence, the copy of the "Express Mail" mailing label, the copy of any returned postcard receipt, and any official notation entered by the USPS are true copies of the originally mailed correspondence, original "Express Mail" mailing label, returned postcard receipt, and official notation entered by the USPS.

Issue:

Was "sufficient" postage affixed to the package? A review of Rio Grande District Post Office Instruction number CSS-95-BC/S-011 indicates that the package should have been dispatched to the USPTO despite the fact that full postage was not affixed. Instead, the package was incorrectly returned. Therefore, the application will be given a filing date of January 19, 2001.

It should be noted that the instant decision is based on the specific facts which have been presented including the fact that the original envelope was never opened and the fact that the record fails to indicate that the law firm intentionally underpaid the postage.

It should be noted that a Certificate of Mailing must be signed by the party who actually mails the letter- by handing the package to a postal employee, placing the package in a dropbox, placing the package in a mailbox, etc.

It should be noted that, had the first express mail label shown a date-in of January 20, 2001, instead of January 19, 2001, petitioner might only have been granted a filing date of January 20, 2001, since the package was placed in a normal dropbox and not an Express Mail dropbox.

Since the requested relief has been granted under 37 CFR § 1.10(e), the petitions under 37 CFR §§ 1.10(c), 1.10(d), 1.181, 1.182, and 1.183, are **dismissed as moot**.

The Application is being forwarded to the Office of Initial Patent Examination for further processing with a filing date of January 19, 2001.

Telephone inquiries should be directed to Petitions Attorney Steven Brantley at (703) 306-5683.

Charles Steven Brantley
Petitions Attorney
Office of Petitions
Office of the Deputy Commissioner
for Patent Examination Policy

UNITED STATES PATENT AND TRADEMARK OFFICE

COMMISSIONER FOR PATENTS
UNITED STATES PATENT AND TRADEMARK OFFICE
P.O. BOX 1450
ALEXANDRIA, VA 22313-1450
www.uspto.gov

MAIL Paper No. 10

MAY 25 2004

DIRECTOR OFFICE
TECHNOLOGY CENTER 2600

J.C. Patents, Inc.
4 Venture, Suite 250
Irvine, CA 92618

In re Application of
Yu-Wen Hwang
Application No. 09/767,437
Filed: January 23, 2001
For: **HIGH-ISOLATION WAVELENGTH MANAGING MODULE FOR BI-DIRECTIONAL WAVELENGTH DIVISION MULTIPLEXING OPTICAL COMMUNICATION SYSTEM**

DECISION ON REQUEST TO WITHDRAW AS ATTORNEY

This is a decision on the Request to Withdraw as Attorney/Agent of record filed on December 08, 2003.

A grantable request to withdraw as attorney/agent of record must do the following:
(1) indicate the present mailing address of the attorney(s)/agent(s) who seek(s) to withdraw, and
(2) be signed by each attorney/agent seeking to withdraw or clearly be signed on their behalf, and
(3) be *approved* at least thirty (30) days prior to the maximum extendable period for response to any outstanding Office Action, and
(4) indicate the address to which future correspondence should be mailed.

The Request to Withdraw as Attorney(s) all attorneys associated with Customer Number 24504 is **Granted**.

The Notice of Acceptance of Power of Attorney mailed May 14, 2004 is hereby vacated.

A Revocation of Power of Attorney, executed by applicant Yu-Wen Hwang, was filed December 1, 2003. However, there is an assignment of record in the instant application, filed January 23, 2001. The Assignee did not properly establish their rights pursuant to 37 C.F.R. §3.73(b) in filing the Revocation of Power of Attorney.

Therefore, as indicated above, all attorneys requesting to withdraw and associated with Customer Number 24504 are withdrawn. All future communications from the Office will continue to be directed to the address listed above until otherwise notified by applicant. Applicant is reminded of the obligation to promptly notify the Patent and Trademark Office of any change in correspondence address to ensure receipt of all communications from the Office. Given the withdraw of all attorneys, there is no power of attorney presently associated with the application.

Dwayne Bost
Special Program Examiner
Technology Center 2600
Communications

cc: Daniel R. McClure
THOMAS, KAYDEN, HORSTEMEYER & RISLEY, L.L.P.
Suite 1750
100 Galleria Parkway N.W.
Atlanta GA 30339

UNITED STATES PATENT AND TRADEMARK OFFICE

COMMISSIONER FOR PATENTS
UNITED STATES PATENT AND TRADEMARK OFFICE
P.O. BOX 1450
ALEXANDRIA, VA 22313-1450
www.uspto.gov

DAVID E. BENNETT
COATS & BENNETT, P.L.L.C.
1400 CRESCENT GREEN, SUITE 300
CARY, NC 27511

COPY MAILED

JUN 14 2006

OFFICE OF PETITIONS

In re Application of :
L. Scott Bloebaum, et al. :
Application No. 09/767,461 : ON PETITION
Filed: January 23, 2001 :
Attorney Docket No.: 000871 :

This is a decision on the petition, filed June 9, 2006, under 37 CFR 1.313(c)(2) to withdraw the above-identified application from issue after payment of the issue fee.

The petition is **GRANTED**.

The above-identified application is withdrawn from issue for consideration of a submission under 37 CFR 1.114 (request for continued examination). See 37 CFR 1.313(c)(2).

Petitioner is advised that the issue fee paid on May 26, 2006, in the above-identified application cannot be refunded. If, however, the above-identified application is again allowed, petitioner may request that it be applied towards the issue fee required by the new Notice of Allowance. [1]

It is noted that the address given on the petition differs from the address of record. If appropriate, a change of address should be filed in this case in accordance with MPEP 601.03. A courtesy copy of this decision is being mailed to the address noted on the petition. However, until otherwise instructed, all future correspondence regarding this application will be mailed solely to the address of record.

Telephone inquiries relating to this decision should be directed to the undersigned at (571) 272-3204.

[1]The request to apply the issue fee to the new Notice may be satisfied by completing and returning the new Issue Fee Transmittal Form PTOL-85(b), which includes the following language thereon: "Commissioner for Patents is requested to apply the Issue Fee and Publication Fee (if any) or re-apply any previously paid issue fee to the application identified above." Petitioner is advised that, whether a fee is indicated as being due or not, the Issue Fee Transmittal Form **must** be completed and timely submitted to avoid abandonment. Note the language in bold text on the first page of the Notice of Allowance and Fee(s) Due (PTOL-85).

The application is being referred to Technology Center AU 2617 for further processing of the request for continued examination under 37 CFR 1.114.

Sherry D. Brinkley
Petitions Examiner
Office of Petitions

cc: DAVID E. BENNETT
COATS & BENNETT, P.L.L.C.
P.O. BOX 5
RALEIGH, NC 27602

UNITED STATES PATENT AND TRADEMARK OFFICE

Commissioner for Patents
United States Patent and Trademark Office
P.O. Box 1450
Alexandria, VA 22313-1450
www.uspto.gov

#12

MCI, INC.
TECHNOLOGY LAW DEPARTMENT
1133 19TH STREET NW, 10TH FLOOR
WASHINGTON, DC 20036

COPY MAILED

DEC 2 2 2004

OFFICE OF PETITIONS

In re Application of :
Thomas Glenn Hall et al :
Application No. 09/767,476 : ON PETITION
Filed: January 22, 2001 :
Attorney Docket No. RIC00020 :

This is a decision on the petition, filed December 17, 2004, under 37 CFR 1.313(c)(2) to withdraw the above-identified application from issue after payment of the issue fee.

The petition is **GRANTED**.

The above-identified application is withdrawn from issue for consideration of a submission under 37 CFR 1.114 (request for continued examination). See 37 CFR 1.313(c)(2).

Petitioner is advised that the issue fee paid on October 26, 2004 in the above-identified application cannot be refunded. If, however, the above-identified application is again allowed, petitioner may request that it be applied towards the issue fee required by the new Notice of Allowance.[1]

Telephone inquiries should be directed to the undersigned at (571) 272-3208.

After receipt of the file in the Office of petitions, the application file will be forwarded to Technology Center AU 2642 to consider the request for continued examination under 37 CFR 1.114.

Karen Creasy

Karen Creasy
Petitions Examiner
Office of Petitions
Office of the Deputy Commissioner
for Patent Examination Policy

---

[1] The request to apply the issue fee to the new Notice may be satisfied by completing and returning the new Issue Fee Transmittal Form PTOL-85(b), which includes the following language thereon: "Commissioner for Patents is requested to apply the Issue Fee and Publication Fee (if any) or re-apply any previously paid issue fee to the application identified above." Petitioner is advised that, whether a fee is indicated as being due or not, the Issue Fee Transmittal Form **must** be completed and timely submitted to avoid abandonment. Note the language in bold text on the first page of the Notice of Allowance and Fee(s) Due (PTOL-85).

UNITED STATES PATENT AND TRADEMARK OFFICE

COMMISSIONER FOR PATENTS
UNITED STATES PATENT AND TRADEMARK OFFICE
P.O. BOX 1450
ALEXANDRIA, VA 22313-1450
www.uspto.gov

MCI, INC
1133 19TH STREET NW
4TH FLOOR
WASHINGTON, DC 20036

COPY MAILED

DEC 0 8 2005

OFFICE OF PETITIONS

In re Application of
Thomas Hall Jr., et al.
Application No. 09/767,476
Filed: January 22, 2001
Attorney Docket No.: RIC00020

ON PETITION

This is a decision on the petition, filed December 7, 2005, under 37 CFR 1.313(c)(2) to withdraw the above-identified application from issue after payment of the issue fee.

The petition is **GRANTED**.

The above-identified application is withdrawn from issue for consideration of a submission under 37 CFR 1.114 (request for continued examination). See 37 CFR 1.313(c)(2).

Petitioner is advised that the issue fee paid on August 16, 2005, in the above-identified application, cannot be refunded. If, however, the above-identified application is again allowed, petitioner may request that it be applied towards the issue fee required by the new Notice of Allowance. [1]

Telephone inquiries relating to this decision should be directed to the undersigned at (571) 272-3204.

The application is being referred to Technology Center AU 2642 for further processing of the request for continued examination under 37 CFR 1.114.

Sherry D. Brinkley
Petitions Examiner
Office of Petitions

[1]The request to apply the issue fee to the new Notice may be satisfied by completing and returning the new Issue Fee Transmittal Form PTOL-85(b), which includes the following language thereon: "Commissioner for Patents is requested to apply the Issue Fee and Publication Fee (if any) or re-apply any previously paid issue fee to the application identified above." Petitioner is advised that, whether a fee is indicated as being due or not, the Issue Fee Transmittal Form **must** be completed and timely submitted to avoid abandonment. Note the language in bold text on the first page of the Notice of Allowance and Fee(s) Due (PTOL-85).

UNITED STATES PATENT AND TRADEMARK OFFICE

COMMISSIONER FOR PATENTS
UNITED STATES PATENT AND TRADEMARK OFFICE
P.O. BOX 1450
ALEXANDRIA, VA 22313-1450
www.uspto.gov

PAUL J. MAGINOT
MAGINOT ADDISON & MOORE
BANK ONE CENTER/TOWER
111 MONUMENT CIRCLE, SUITE 3000
INDIANAPOLIS, IN 46204-5130

COPY MAILED

OCT 0 3 2003

OFFICE OF PETITIONS

In re Application of
Brian J. Maroney
Application No. 09/767,487
Filed: January 23, 2001
Attorney Docket No. 1671-0172

ON PETITION

This is a decision on the petition, filed October 1, 2003, under 37 CFR 1.313(c)(2) to withdraw the above-identified application from issue after payment of the issue fee.

The petition is **GRANTED**.

The above-identified application is withdrawn from issue for consideration of a submission under 37 CFR 1.114 (request for continued examination). See 37 CFR 1.313(c)(2).

Petitioner is advised that the issue fee paid on August 25, 2003 in the above-identified application cannot be refunded. If, however, the above-identified application is again allowed, petitioner may request that it be applied towards the issue fee required by the new Notice of Allowance.[1]

Telephone inquiries should be directed to Irvin Dingle at (703) 306-5684.

After receipt of the file in the Office of Petitions, the file will be forwarded to Technology Center AU 3743 for processing of the request for continued examination under 37 CFR 1.114 and for consideration of the concurrently filed Information Disclosure Statement.

Irvin Dingle
Petitions Examiner
Office of Petitions
Office of the Deputy Commissioner
for Patent Examination Policy

---

[1] The request to apply the issue fee to the new Notice may be satisfied by completing and returning the new Issue Fee Transmittal Form PTOL-85(b), which includes the following language thereon: "Commissioner for Patents is requested to apply the Issue Fee and Publication Fee (if any) or re-apply any previously paid issue fee to the application identified above." Petitioner is advised that, whether a fee is indicated as being due or not, the Issue Fee Transmittal Form **must** be completed and timely submitted to avoid abandonment. Note the language in bold text on the first page of the Notice of Allowance and Fee(s) Due (PTOL-85).

UNITED STATES PATENT AND TRADEMARK OFFICE

Commissioner for Patents
United States Patent and Trademark Office
P.O. Box 1450
Alexandria, VA 22313-1450
www.uspto.gov

Paper No. 19

HOWREY LLP - DC
C/O IP DOCKETING DEPARTMENT
2941 FAIRVIEW PARK DR
SUITE 200
FALLS CHURCH VA 22042-2924

COPY MAILED

JAN 2 6 2009

OFFICE OF PETITIONS

In re Application of	:	
Franciscus Theodorus Cornelis Geerts	:	
Application No. 09/767,496	:	NOTICE
Filed: January 24, 2001	:	
Attorney Docket No. 04132.0096PCUS00	:	

This is a notice regarding your request for acceptance of a fee deficiency submission under 37 CFR 1.28. On September 1, 1998, the Court of Appeals for the Federal Circuit held that 37 CFR 1.28(c) is the sole provision governing the time for correction of the erroneous payment of the issue fee as a small entity. **See DH Technology v. Synergystex International, Inc. 154 F.3d 1333, 47 USPQ2d 1865 (Fed. Cir. Sept. 1, 1998).**

The Office no longer investigates or rejects original or reissue applications under 37 CFR 1.56. **1098 Off. Gaz. Pat. Office 502 (January 3, 1989)**. Therefore, nothing in this Notice is intended to imply that an investigation was done.

Your fee deficiency submission under 37 CFR 1.28 is hereby **ACCEPTED**.

This application is no longer entitled to small entity status. Accordingly, all future fees paid in this application must be paid at the large entity rate.

In view of the above, the $130 petition fee submitted is deemed unnecessary and will be refunded to petitioner's deposit account in due course.

Inquiries related to this communication should be directed to the April M. Wise at (571) 272-1642.

/Carl Friedman/
Carl Friedman
Petitions Examiner
Office of Petitions

UNITED STATES PATENT AND TRADEMARK OFFICE

COMMISSIONER FOR PATENTS
UNITED STATES PATENT AND TRADEMARK OFFICE
P.O. BOX 1450
ALEXANDRIA, VA 22313-1450
www.uspto.gov

Paper No. 6

MOTOROLA, INC.
1303 EAST ALGONQUIN ROAD
IL01/3RD
SCHAUMBURG, IL 60196

COPY MAILED

MAY 2 2 2003

OFFICE OF PETITIONS

In re Application of	:	
Lee M. Proctor, et al.	:	
Application No. 09/767,522	:	ON PETITION
Filed: January 23, 2001	:	
Attorney Docket No. CE08569R	:	

This is a decision on the petition under 37 CFR 1.137(b), filed May 12, 2003, to revive the above-identified application.

The petition is **GRANTED.**

The above-identified application became abandoned for failure to reply in a timely manner to the Notice to File Corrected Application Papers mailed March 5, 2001. The Notice set a period for reply of two (2) months from the mail date of the Notice. No extensions of time under the provisions of 37 CFR 1.136(a) were obtained. Accordingly, the above-identified application became abandoned on May 7, 2001.

The $130 surcharge as set forth in 37 CFR 1.16(e) for the late filing fee or oath or declaration is unnecessary and will be credited to Deposit Account No. 50-2117 as authorized.

Telephone inquiries concerning this decision should be directed to the undersigned at (703) 306-5594.

The application file is being forwarded to the Office of Initial Patent Examination for further processing.

Retta Williams

Retta Williams
Petitions Examiner
Office of Petitions
Office of the Deputy Commissioner
for Patent Examination Policy

UNITED STATES PATENT AND TRADEMARK OFFICE

Commissioner for Patents
United States Patent and Trademark Office
P.O. Box 1450
Alexandria, VA 22313-1450
www.uspto.gov

BRIAN M. DINGMAN
MIRICK, O'CONNELL, DEMALLIE & LOUGEE, LLP
100 FRONT STREET
WORCESTER, MA 01608-1477

COPY MAILED

JUN 0 4 2007

OFFICE OF PETITIONS

In re Application of	:	
Adler-Golden et al.	:	
Application No. 09/767,539	:	ON PETITION
Filed: January 23, 2001	:	
Attorney Docket No. SPSC/001/US	:	

This is a decision on the petition under 37 C.F.R. § 1.137(b), filed April 11, 2007, to revive the above-identified application.

The petition is **GRANTED.**

The petition satisfies the conditions for revival pursuant to the provisions of 37 CFR 1.137(b) in that (1) the reply in the form of a Request for Continued Examination (RCE) and an Amendment; (2) the petition fee; and (3) the required statement of unintentional delay have been received. Accordingly, the response has been accepted as having been unintentionally delayed.

This matter is being referred to Technology Center 2800 for processing of the Request for Continued Examination under 37 CFR 1.114 filed with the instant petition.

Telephone inquiries regarding this decision should be directed to the undersigned at (571) 272-3206.

Liana Walsh
Petitions Examiner
Office of Petitions

UNITED STATES PATENT AND TRADEMARK OFFICE

COMMISSIONER FOR PATENTS
UNITED STATES PATENT AND TRADEMARK OFFICE
P.O. BOX 1450
ALEXANDRIA, VA 22313-1450
www.uspto.gov

PATTERSON, THUENTE, SKAAR & CHRISTENSEN, P.A.
4800 IDS CENTER
80 SOUTH 8TH STREET
MINNEAPOLIS MN 55402-2100

MAILED

JUN 03 2004

Office of the Director
Group 3600

In re Application of
Amir Chaboki et al.
Application No. 09/767,542
Filed: January 23, 2001
For: TRANSVERSE PLASMA INJECTOR IGNITOR

DECISION ON PETITION TO WITHDRAW THE HOLDING OF ABANDONMENT

This is in reply to the petition to withdraw the holding of abandonment under 37 CFR 1.181, filed in the United States Patent and Trademark Office on March 24, 2004.

The petition is **GRANTED** in view of the following evidence of timely filing :

☐ Postcard receipt being dated_____.

☐ USPTO return facsimile receipt dated _____ which identifies the application by serial number and the type of Response that was filed on that date.

☒ Certificate of Mailing/Transmission signed on October 28, 2003 and supported by a statement under 37 C.F.R. 1.8(b)(3).

☐ Hand Delivery Receipt of the specific documents submitted dated _____.

☐ Certificate of Transmission of CPA under 37 C.F.R. 1.6 filed on _____.

☐ Express Mail Receipt under 37 C.F.R. 1.10 dated _____.

This application is being forwarded to the Supervisory Legal Instruments Examiner for entry of the response filed with the petition, then to the examiner for prompt action on the response.

RAR/mjz: 6/3/04

Randolph A. Reese
Special Programs Examiner
Group 3600

UNITED STATES PATENT AND TRADEMARK OFFICE

Commissioner for Patents
United States Patent and Trademark Office
P.O. Box 1450
Alexandria, VA 22313-1450
www.uspto.gov
OIW 02-05

BAKER & BOTTS
30 ROCKEFELLER PLAZA
NEW YORK NY 10112

COPY MAILED
FEB 11 2005
OFFICE OF PETITIONS

In re Application of	:	
Lim et al.	:	
Application No. 09/767,563	:	ON PETITION
Filed: 23 January, 2001	:	
Atty Docket No. A33875	:	

This is a decision on the petition under 37 CFR 1.137(b),[1] filed on 29 September, 2004, to revive the above-identified application.

The petition is **GRANTED**.

This application became abandoned on 19 July, 2004, for failure to file a proper reply to the final Office action mailed on 18 February, 2004, which set a three (3) month shortened statutory period for reply. On 21 July, 2004 (certificate of mailing 19

---

[1]Effective December 1, 1997, the provisions of 37 CFR 1.137(b) now provide that where the delay in reply was unintentional, a petition may be filed to revive an abandoned application or a lapsed patent pursuant to 37 CFR 1.137(b). A grantable petition filed under the provisions of 37 CFR 1.137(b) must be accompanied by:

(1) the required reply, unless previously filed. In a nonprovisional application abandoned for failure to prosecute, the required reply may be met by the filing of a continuing application. In a nonprovisional application filed on or after June 8, 1995, and abandoned for failure to prosecute, the required reply may also be met by the filing of a request for continued examination in compliance with § 1.114. In an application or patent, abandoned or lapsed for failure to pay the issue fee or any portion thereof, the required reply must be the payment of the issue fee or any outstanding balance thereof. In an application abandoned for failure to pay the publication fee, the required reply must include payment of the publication fee.

(2) the petition fee as set forth in 37 CFR 1.17(m);

(3) a statement that the entire delay in filing the required reply from the due date for the reply until the filing of a grantable petition pursuant to 37 CFR 1.137(b) was unintentional. The Commissioner may required additional information where there is a question whether the delay was unintentional; and

(4) any terminal disclaimer (and fee as set forth in 37 CFR 1.20(d)) required pursuant to 37 CFR 1.137(c)).

August, 2004), petitioners filed an amendment after final rejection and a two (2) month extension of time. The amendment did not place the case in *prima facie* condition for allowance, however, and an Advisory Action was mailed on 8 September, 2004. The filing of the present petition precedes the mailing of Notice of Abandonment.

On 29 September, 2004, a Request for Continued Examination (RCE) was filed, indicating that the amendment filed on 21 July, 2004 (certificate of mailing date 19 July, 2004), was the submission required under 37 CFR 1.114.

Pursuant to 37 CFR 1.136, an extension of time must be filed prior to the expiration of the maximum period obtainable for reply to avoid abandonment. Accordingly, since the $530.00 extension of time fee submitted on 29 September, 2004, was subsequent to the maximum period obtainable for reply, this fee is unnecessary and has been credited to counsel's deposit account, No. 02-4377.

The application is being referred to Technology Center Art Unit 2686 for further processing.

Telephone inquiries concerning this matter may be directed to the undersigned at (571)272-3231.

DWood

Douglas I. Wood
Senior Petitions Attorney
Office of Petitions

UNITED STATES PATENT AND TRADEMARK OFFICE

Commissioner for Patents
United States Patent and Trademark Office
P.O. Box 1450
Alexandria, VA 22313-1450
www.uspto.gov

Seth H. Ostrow
BROWN, RAYSMAN, MILLSTEIN, FELDER
& STEINER LLP
900 Third Avenue
New York, NY 10022

MAILED

MAY 3 1 2005

Technology Center 2100

In re Application of:
McTernan et al.
Application No. 09/767,602
Filed: January 22, 2001
For: SYSTEM AND METHOD FOR MANAGING CONNECTIONS TO SERVERS DELIVERING MULTIMEDIA CONTENT

DECISION ON REQUEST TO WITHDRAW AS ATTORNEY OR AGENT

This is a decision on the Request To Withdraw from Representation filed April 6, 2005.

A grantable request to withdraw as attorney of record should indicate thereon the present mailing addresses of the attorney(s) who is/are withdrawing from the record and of the applicant. The request for withdrawal must be signed by every attorney seeking to withdraw or contain a clear indication that one attorney is signing on behalf of another/others. A request to withdraw will not be approved unless at least 30 (thirty) days would remain between the date of approval and the later of the expiration date of a time to file a response or the expiration date of the maximum time period which can be extended under 37 C.F.R. § 1. 136(a). The effective date of withdrawal being the date of decision and not the date of request. See M.P.E.P. § 402.06. 37 C.F.R. § 1.36 further requires that the applicant or patent owner be notified of the withdrawal of the attorney or agent.

The request is **GRANTED**.

All future communications from the Office will be directed to the below-listed address until otherwise notified by applicant. This correspondence address is provided by the withdrawn attorney(s). Applicant is reminded of the obligation to promptly notify the Patent and Trademark Office (Office) of any change in correspondence address to ensure receipt of all communications from the Office.

for

Vincent N. Trans
Special Program Examiner
Technology Center 2100

5/6/05

Cc: Jonathan Prince
SORCERON, INC.
75 Ninth Avenue
Suite 6 East
New York, NY 10011

UNITED STATES PATENT AND TRADEMARK OFFICE

Commissioner for Patents
United States Patent and Trademark Office
P.O. Box 1450
Alexandria, VA 22313-1450
www.uspto.gov

BROWN, RAYSMAN, MILLSTEIN, FELDER &
STEINER LLP
900 THIRD AVENUE
NEW YORK, NY 10022

MAILED

JUL 2 8 2005

Technology Center 2100

In re Application of:
Brennan J. MCTERNAN, et al.
Application No. 09/767,603
Filed: January 22, 2001
For: SYSTEM AND METHOD FOR USING BENCHMARKING TO ACCOUNT FOR VARIATIONS IN CLIENT CAPABILITIES IN THE DISTRIBUTION OF A MEDIA PRESENTATION

DECISION ON REQUEST TO WITHDRAW AS ATTORNEY OR AGENT

This is a decision on the Request to Withdraw from Representation filed April 6, 2005.

A grantable request to withdraw as attorney of record should indicate thereon the present mailing addresses of the attorney(s) who is/are withdrawing from the record and of the applicant. The request for withdrawal must be signed by every attorney seeking to withdraw or contain a clear indication that one attorney is signing on behalf of another/others. A request to withdraw will not be approved unless at least 30 (thirty) days would remain between the date of approval and the later of the expiration date of a time to file a response or the expiration date of the maximum time period which can be extended under 37 C.F.R. § 1.136(a). The effective date of withdrawal being the date of decision and not the date of request. See M.P.E.P. § 402.06. 37 C.F.R. § 1.36 further requires that the applicant or patent owner be notified of the withdrawal of the attorney or agent.

A review of the file reveals that a non-final Office Action was mailed on August 25, 2004. Therefore, the time for response, including the maximum extendable period, to the Office action mailed on August 25, 2004 expired February 25, 2005. Accordingly, the request is **DENIED.**

Further communications will continue to be addressed to the address above.

Michelle R. Eason for

Vincent N. Trans
Special Program Examiner
Technology Center 2100
Computer Architecture, Software, and
Information Security
571-272-3613

UNITED STATES PATENT AND TRADEMARK OFFICE

Commissioner for Patents
United States Patent and Trademark Office
P.O. Box 1450
Alexandria, VA 22313-1450
www.uspto.gov

BROWN, RAYSMAN, MILLSTEIN, FELDER &
STEINER LLP
900 THIRD AVENUE
NEW YORK, NY 10022

MAILED

JUL 2 8 2005

Technology Center 2100

In re Application of:
Brennan J. MCTERNAN, et al.
Application No. 09/767,604
Filed: January 22, 2001
For: SYSTEM AND METHOD FOR RECEIVING PACKET DATA MULTICAST IN SEQUENTIAL LOOPING FASHION

DECISION ON REQUEST TO WITHDRAW AS ATTORNEY OR AGENT

This is a decision on the Request to Withdraw from Representation filed April 6, 2005.

A grantable request to withdraw as attorney of record should indicate thereon the present mailing addresses of the attorney(s) who is/are withdrawing from the record and of the applicant. The request for withdrawal must be signed by every attorney seeking to withdraw or contain a clear indication that one attorney is signing on behalf of another/others. A request to withdraw will not be approved unless at least 30 (thirty) days would remain between the date of approval and the later of the expiration date of a time to file a response or the expiration date of the maximum time period which can be extended under 37 C.F.R. § 1.136(a). The effective date of withdrawal being the date of decision and not the date of request. See M.P.E.P. § 402.06. 37 C.F.R. § 1.36 further requires that the applicant or patent owner be notified of the withdrawal of the attorney or agent.

A review of the file reveals that a non-final Office Action was mailed on August 25, 2004. Therefore, the time for response, including the maximum extendable period, to the Office action mailed on August 25, 2004 expired February 25, 2005. Accordingly, the request is **DENIED.**

Further communications will continue to be addressed to the address above.

Michelle R. Eason for

Vincent N. Trans
Special Program Examiner
Technology Center 2100
Computer Architecture, Software, and
Information Security
571-272-3613

UNITED STATES PATENT AND TRADEMARK OFFICE

Commissioner for Patents
United States Patent and Trademark Office
Washington, D.C. 20231
www.uspto.gov

Paper No. 5

C. Douglas McDonald
Carlton Fields, P.A.
P.O. Box 3239
Tampa, FL 33601-3239

MAILED

JUL 23 2001

Technology Center 2100

In re Application of:	)	
Todd DUNNING et al	)	
Application No. 09/767,646	)	
Filed: January 22, 2001	)	
For: SYSTEM, METHOD AND COMPUER PROGRAM PRODUCT FOR REGISTERING AN UNREGISTERED VENDOR/PRODUCT IN A BUSINESS-TO-BUSINESS NETWORK-BASED FRAMEWORK	)	**DECISION ON REQUEST FOR WITHDRAWAL AS ATTORNEY**

This is a decision on the Request To Withdraw from Representation filed June 11, 2001.

A grantable request to withdraw as attorney of record should indicate thereon the present mailing addresses of the attorney(s) who is/are withdrawing from the record and of the applicant. The request for withdrawal must be signed by every attorney seeking to withdraw or contain a clear indication that one attorney is signing on behalf of another/others. A request to withdraw will not be approved unless at least 30 (thirty) days would remain between the date of approval and the later of the expiration date of a time to file a response or the expiration date of the maximum time period which can be extended under 37 C.F.R. § 1. 136(a). The effective date of withdrawal being the date of decision and not the date of request. See M.P.E.P. § 402.06. 37 C.F.R. § 1.36 further requires that the applicant or patent owner be notified of the withdrawal of the attorney or agent.

There is no statement that Mr. McDonald is ***authorized*** to sign on behalf of the other listed attorneys Therefore, the request is **DENIED**.

All future communications from the Office will continue to be directed to the above-listed address until otherwise notified by applicant. Applicant is reminded of the obligation to promptly notify the Office of any change in correspondence address to ensure receipt of all communications from the Office.

Vincent N. Trans
Special Programs Examiner
Technology Center 2100
Computer Architecture, Software, and Electronic Commerce
(703) 305-9750

UNITED STATES PATENT AND TRADEMARK OFFICE

COMMISSIONER FOR PATENTS
UNITED STATES PATENT AND TRADEMARK OFFICE
WASHINGTON, D.C. 20231
www.uspto.gov

MAIL

AUG 16 2001

DIRECTOR OFFICE
TECHNOLOGY CENTER 2100

Paper No. 9

C. Douglas McDonald
Carlton Fields, P.A.
P.O. Box 3239
Tampa, Florida 33601-3239

In re Application of: Todd Dunning et al.	)	
Application No. 09/767,646	)	
Filed: January 22, 2001	)	**DECISION ON REQUEST FOR**
For: SYSTEM, METHOD AND	)	**WITHDRAWAL AS ATTORNEY**
COMPUTER PROGRAM PRODUCT	)	
FOR REGISTERING AN	)	
UNREGISTERED	)	
VENDOR/PRODUCT IN A	)	
BUSINESS-TO-BUSINESS	)	
NETWORK-BASED FRAMEWORK	)	

This is a decision on the Request To Withdraw from Representation filed August 3, 2001.

A grantable request to withdraw as attorney of record should indicate thereon the present mailing addresses of the attorney(s) who is/are withdrawing from the record and of the applicant. The request for withdrawal must be signed by every attorney seeking to withdraw or contain a clear indication that one attorney is signing on behalf of another/others. A request to withdraw will not be approved unless at least 30 (thirty) days would remain between the date of approval and the later of the expiration date of a time to file a response or the expiration date of the maximum time period which can be extended under 37 C.F.R. § 1. 136(a). The effective date of withdrawal being the date of decision and not the date of request. See M.P.E.P. § 402.06. 37 C.F.R. § 1.36 further requires that the applicant or patent owner be notified of the withdrawal of the attorney or agent.

The request is **GRANTED**.

All future communications from the Office will be directed to the below-listed address until otherwise notified by applicant. This correspondence address is provided by the withdrawn attorney(s). Applicant is reminded of the obligation to promptly notify the Patent and Trademark Office (Office) of any change in correspondence address to ensure receipt of all communications from the Office.

Pinchus M. Laufer
Special Programs Examiner
Technology Center 2100
Computer Architecture, Software, and Electronic Commerce
(703) 306-4160

cc: Kevin J. Zilka
Silicon Valley Intellectual Property Group
P.O. Box 721120
San Jose, California 95172-1120

#9
DW

UNITED STATES PATENT AND TRADEMARK OFFICE

MAY 13 2004

COMMISSIONER, FOR PATENTS
UNITED STATES PATENT AND TRADEMARK OFFICE
P.O. BOX 1450
ALEXANDRIA, VA 22313-1450
www.uspto.gov

MAILED

MAY 13 2004

OFFICE OF THE DIRECTOR
TC 3600

Maria S. Swiatek
FLEHR HOHBACH TEST ALBRITTON & HERBERT LLP
Four Embarcadero Center, Suite 3400
San Francisco, CA 94111-4187

In re Application of :
Richard N. Savage, et al. :
Application No. 09/767,659 :
Filed: January 22, 2001 :
For: SEMICONDUCTOR WAFER PROCESSING SYSTEM WITH VERTICALLY STACKED PROCESS CHAMBERS AND SINGLE AXIS DUAL WAFER TRANSFER SYSTEM

DECISION ON PETITION TO WITHDRAW THE HOLDING OF ABANDONMENT

This is in reply applicants' Petition to Withdraw the Holding of Abandonment under 37 CFR 1.181 filed in the United States Patent and Trademark Office on October 6, 2003.

The petition is **DISMISSED**.

A review of the file record indicates that the application was held abandoned for failure to timely file a proper response to the Office action dated December 31, 2002 and a Notice to that effect was mailed on September 4, 2003.

Petitioner states that a Request for Continued Examination (RCE) and an extension of time were filed as a response to the above noted Office action on April 29, 2003 and deposited with the U.S. Postal Service on that date. The copy of the response submitted with the petition includes a Certificate of Mailing dated April 29, 2003 and an OIPE stamped post card receipt dated May 6, 2003.

Because the date shown on the post card receipt (May 6, 2003) is after the period for response set in the Office action plus the extension of time this decision will be based upon the Certificate of Mailing.

Any petition to withdraw the holding of abandonment based upon a Certificate of Mailing must include the following requirements:

(1) A copy of the original response bearing a signed Certificate of Mailing which includes the date of signing; and

(2) A statement under 37 CFR 1.8(b)(3) attesting to the personal knowledge of transmitting the *original* response on the date indicated on the Certificate of Mailing (see 37 CFR 1.8 and MPEP 512).

While meeting requirement (1) above the petition fails, under requirement (2), to also include a statement under 37 CFR 1.8(b)(3) attesting to the personal knowledge of sending the *original*

response on the date indicated on the certificate. This statement should be signed by the person who signed the certificate.

Any request for reconsideration of this decision must be submitted within TWO (2) MONTHS from the mail date of this decision. Extensions of time under 37 CFR 1.136(b) are permitted. The reconsideration request should include a cover letter entitled "Renewed Petition to Withdraw the Holding of Abandonment Under 37 CFR 1.81."

Randolph A. Reese
Special Programs Examiner
Patent Technology Center 3600
(703) 308-2121

RAR/cps: 5/12/04

UNITED STATES PATENT AND TRADEMARK OFFICE

COMMISSIONER FOR PATENTS
UNITED STATES PATENT AND TRADEMARK OFFICE
P.O. BOX 1450
ALEXANDRIA, VA 22313-1450
www.uspto.gov

MAILED

AUG 31 2004

DIRECTOR'S OFFICE
TECHNOLOGY CENTER 3600

Maria S. Swiatek
Flehr Hohbach Test Albritton & Herbert LLP
Four Embarcadero Center, Suite 3400
San Francisco, CA 94111-4187

In re Application of
Richard N. Savage et al.
Application No. 09/767,659
Filed: January 22, 2001
For: SEMICONDUCTOR WAFER PROCESSING SYSTEM WITH VERTICALLY-STACKED PROCESS CHAMBERS AND SINGLE-AXIS DUAL-WAFER TRANSFER SYSTEM

DECISION ON PETITION TO WITHDRAW THE HOLDING OF ABANDONMENT

This is in reply to the renewed petition to withdraw the holding of abandonment under 37 CFR 1.181, filed in the United States Patent and Trademark Office, on June 14, 2004.

The petition is **GRANTED** in view of the following evidence of timely filing :

☐ Postcard receipt being dated_____.

☐ USPTO return facsimile receipt dated _____ which identifies the application by serial number and the type of Response that was filed on that date.

☒ Certificate of Mailing/Transmission signed on April 29, 2003 and supported by a statement under 37 C.F.R. 1.8(b)(3).

☐ Hand Delivery Receipt of the specific documents submitted dated _____.

☐ Certificate of Transmission of CPA under 37 C.F.R. 1.6 filed on _____.

☐ Express Mail Receipt under 37 C.F.R. 1.10 dated _____.

This application is being forwarded to the Supervisory Legal Instruments Examiner for entry of the response filed with the petition, then to the examiner for prompt action on the response.

SNM/vdb: 8/26/04

STEVEN N. MEYERS
SPECIAL PROGRAM EXAMINER
TECHNOLOGY CENTER 3600

UNITED STATES PATENT AND TRADEMARK OFFICE

Commissioner for Patents
United States Patent and Trademark Office
P.O. Box 1450
Alexandria, VA 22313-1450
www.uspto.gov

BROWN, RAYSMAN, MILLSTEIN, FELDER &
STEINER LLP
900 THIRD AVENUE
NEW YORK, NY 10022

MAILED

JUN 0 5 2005

Technology Center 2100

In re Application of:
Brennan J. MCTERNAN, et al.
Application No. 09/767,672
Filed: January 22, 2001
For: METHOD AND SYSTEM FOR DISTRIBUTING VIDEO USING A VIRTUAL SET

DECISION ON REQUEST TO WITHDRAW AS ATTORNEY OR AGENT

This is a decision on the Request to Withdraw from Representation filed April 6, 2005.

A grantable request to withdraw as attorney of record should indicate thereon the present mailing addresses of the attorney(s) who is/are withdrawing from the record and of the applicant. The request for withdrawal must be signed by every attorney seeking to withdraw or contain a clear indication that one attorney is signing on behalf of another/others. A request to withdraw will not be approved unless at least 30 (thirty) days would remain between the date of approval and the later of the expiration date of a time to file a response or the expiration date of the maximum time period which can be extended under 37 C.F.R. § 1.136(a). The effective date of withdrawal being the date of decision and not the date of request. See M.P.E.P. § 402.06. 37 C.F.R. § 1.36 further requires that the applicant or patent owner be notified of the withdrawal of the attorney or agent.

A review of the file reveals that a non-final Office Action was mailed on August 8, 2004. Therefore, the time for response, including the maximum extendable period, to the Office action mailed on August 8, 2004 expired February 8, 2005. Accordingly, the request is **DENIED.**

Further communications will continue to be addressed to the address above.

Vincent N. Trans
Special Program Examiner
Technology Center 2100
Computer Architecture, Software, and
Information Security
571-272-3613

UNITED STATES PATENT AND TRADEMARK OFFICE

Commissioner for Patents
United States Patent and Trademark Office
P.O. Box 1450
Alexandria, VA 22313-145

NOV 22 2004

MAILED

NOV 22 2004

OFFICE OF THE DIRECTOR
TC 3600

OPTV/BLAKELY
12400 Wilshire Boulevard
Seventh Floor
Los Angeles, CA 90025-1030

In re application of
Tim Carruthers et al
Application No. 09/767,793
Filed: January 23, 2001
For: METHOD AND SYSTEM FOR SCHEDULING ONLINE TARGETED CONTENT DELIVERY

DECISION ON REQUEST FOR WITHDRAWAL OF ATTORNEY

This is a decision on the request filed on October 06, 2004, under 37 CFR 1.36 and MPEP 402.06, requesting permission to withdraw as the attorney of record in the above-identified application.

The request is **NOT APPROVED**

Under 37 CFR 1.36 an attorney may withdraw only upon application to and approval by the Commissioner. It should be noted that a withdrawal is effective when approved, not when filed. Besides giving due notice to his or her client and delivering to the client all papers and property to which the client is entitled as specified under 37 CFR 10.40, approval of such a request requires that the following conditions be met:

A) Each attorney of record must sign the notice of withdrawal, or the notice must contain a clear indication of one attorney signing on behalf of another, because the Office does not recognize law firms;

B) A proper reason for the withdrawal as enumerated in 37 CFR 10.40(b) or subsection (1)-(6) of 37 CFR 10.40(c) must be provided; and

C) If withdrawal is requested in accordance with 37 CFR 10.40(c) above, there must be at least 30 days between approval of the withdrawal and the later of the expiration date of a time period for reply or the expiration date of the period which can be obtained by a petition and fee for extension of time under 37 CFR 1.136(a).

The request to withdraw as attorney is not accepted in the above-identified application because the request lacks condition A) and B) above.

As to condition A) the attorneys listed as being withdrawn do not match those appointed in Customer No. 44367. Therefore, some attorneys originally appointed would still be of record if the request were approved. Specifically, Thomas Ewing, Richard Gregson, Suneel Arora, Lucinda Price, David Black, Peter Maki, Ann McCrackin, Monique Shonka; David Suhl, John Dahl, Patti Jurkovich, Eric Replogle, Richard Thill, Nayantara Chatterjee, Ashley Ott, and Van Nguy would still have power of attorney. It does not appear that that is the intent of the request. If only certain attorneys are withdrawing, then it must be so stated. It is suggested that the signing attorney withdraw on behalf of himself and all attorneys of record if that is the intent of the petition.

Condition B) can be met by clearly specifying one of the valid reasons for withdrawal under 37 CFR 10.40 (b)(1)-(6) or (C)(1)-(6).

Steven N. Meyers
Special Programs Examiner
Patent Technology Center 3600
(703) 308-3868

SNM/pav: 11/09/04

Ok to enter, VBC 1/20/10

DOCKET NO.: 203218US6RE

IN THE UNITED STATES PATENT AND TRADEMARK OFFICE

IN RE APPLICATION OF: Kazunori OZAWA, et al.

PATENT NO.: RE 41,009 GROUP: 2626

ISSUED: November 24, 2009 EXAMINER: CHAWAN, V.

FOR: AUDIO TRANSMISSION, RECORDING AND REPRODUCING SYSTEM

REQUEST FOR CERTIFICATE OF CORRECTION

DIRECTOR OF THE UNITED STATES PATENT AND TRADEMARK OFFICE
ALEXANDRIA, VA 22313-1450

SIR:

The following is a Request for Certificate of Correction in Serial Number 09/767,811, now U.S. Patent Number RE 41,009.

In accordance with the provisions of Rule 322 of the Rules of Practice, which implement 35 USC 255, the U.S. Patent and Trademark Office is respectfully requested to issue a Certificate of Correction in the above-identified patent.

The error is the fault of the Applicant and, accordingly, a credit card payment form for $100.00 is submitted herewith, as required 37 CFR 1.323. The error ascribable to Applicant is minor and the correction would not entail re-examination or constitute new matter. They are all readily apparent from the context of the specification. The requested correction is listed on FORM P.T.O. 1050.

Respectfully submitted,

OBLON, SPIVAK, McCLELLAND,
MAIER & NEUSTADT, L.L.P.

Edward Tracy

Bradley D. Lytle
Registration No. 40,073

Edward W. Tracy, Jr.
Registration No. 47,998

Customer Number
22850
Tel. (703) 413-3000
Fax. (703) 413-2220
(OSMMN 07/09)

UNITED STATES PATENT AND TRADEMARK OFFICE

CERTIFICATE OF CORRECTION

PATENT NO. : RE 41,009

DATED: November 24, 2009

INVENTOR(S): Kazunori OZAWA, et al.

It is certified that errors appear in the above-identified patent and that said Letters Patent is hereby corrected as shown below:

Column 1, line 8, insert --Notice: More than one reissue application has been filed for the reissue of U.S. Patent No. 5,870,710. The reissue applications are application numbers 09/767,811 (the present application), 12/200,616, and 12/236,082. Application numbers 12/200,616 and 12/236,082 are continuation reissues of reissue application number 09/767,811.--.

Column 10, lines 39 to 40, delete "in form" and insert --in a form--.

Column 11, lines 2 to 3, delete "in form" and insert --in a form--.

Column 12, line 29, delete "apparatus configured" and insert --apparatus and configured--;
line 33, delete "second" and insert --a second--;
line 34, delete "apparatus configured" and insert --apparatus and configured--;
lines 44 to 45, delete "in form" and insert --in a form--;
line 50, delete "comprising," and insert --comprising--;
line 56, delete "apparatus configured" and insert --apparatus and configured--; and
line 61, delete "apparatus configured" and insert --apparatus and configured--.

Column 13, lines 9 to 10, delete "in form" and insert --in a form--.

Column 14, line 13, delete "wherein" and insert --wherein-- at line 14;
lines 26 to 27, delete "in form" and insert --in a form--;
line 38, delete "wherein" and insert --wherein-- at line 39;
line 41, delete "removable" and insert --removably--;
lines 56 to 57, delete "in form" and insert --in a form--; and
line 64, delete "for."

Column 15, line 3, delete "removable" and insert --removably--;
line 21, delete "A memory" and insert--The memory--; and
line 27, delete "A memory" and insert--The memory--.

Column 16, line 8, delete "A memory" and insert--The memory--;
line 13, delete "A memory" and insert--The memory--;
line 46, delete "A memory" and insert--The memory--; and
line 48, delete "removable" and insert --removably--.

Column 17, line 47, delete "wherein" and insert --wherein-- at line 48; and
line 64, delete "an".

Column 18, line 10, delete "apparatus;" and insert--apparatus; and--;
line 42, delete "CPU," and insert--CPU;--;
lines 44 to 45, delete "system, and" and insert --system;--; and
line 55, delete "display;" and insert--display; and--.

Mailing address of sender:

OBLON, SPIVAK MCCLELLAND,
MAIER & NEUSTADT, L.L.P.
1940 DUKE STREET
ALEXANDRIA, VIRGINIA 22314
Tel. (703) 413-3000
Fax. (703) 413-2220
(OSMMN 07/09)

Patent No. RE 41,009

No. of add'l copies
@ .30 per page

SPE RESPONSE FOR CERTIFICATE OF CORRECTION

Paper No.: _____

DATE : 01/16/10

TO SPE OF : ART UNIT 2626

SUBJECT : Request for Certificate of Correction for Appl. No.: 09767811 Patent No.: RE41009

Please respond to this request for a certificate of correction within 7 days.

FOR IFW FILES:

Please review the requested changes/corrections as shown in the **COCIN** document(s) in the IFW application image. No new matter should be introduced, nor should the scope or meaning of the claims be changed.

Please complete the response (see below) and forward the completed response to scanning using document code **COCX**.

FOR PAPER FILES:

Please review the requested changes/corrections as shown in the attached certificate of correction. Please complete this form (see below) and forward it with the file to:

Certificates of Correction Branch (C of C)
Randolph Square 9D40-D
Palm Location 7580

You can fax the Directors/SPE response to 571-270-9990

Lamonte Newsome

Certificates of Correction Branch

703-756-1574

Thank You For Your Assistance

The request for issuing the above-identified correction(s) is hereby:

Note your decision on the appropriate box.

☒ **Approved**	**All** changes apply.
☐ **Approved in Part**	Specify below which changes **do not** apply.
☐ **Denied**	State the reasons for denial below.

Comments: _____

Formatted: Indent: Left: 1.22"

Formatted: Bullets and Numbering

SPE RESPONSE FOR CERTIFICATE OF CORRECTION

/Vijay Chawan/ Primary examiner AU 2626

01/20/2010

Deleted:

SPE **Art Unit**

UNITED STATES PATENT AND TRADEMARK OFFICE

COMMISSIONER FOR PATENTS
UNITED STATES PATENT AND TRADEMARK OFFICE
WASHINGTON, DC 20231
www.uspto.gov

Paper No. 6

MAIL

SEP 1 0 2002

DIRECTOR OFFICE
TECHNOLOGY CENTER 2600

Antonelli, Terry, Stout & Kraus , LLP
Suite 1800
1300 North Seventeenth Street
Arlington VA 22209

In re Application of:
Shaw, Eric D.
Application No. 09/767,838
Filed: January 24, 2001
For: SYSTEM AND METHOD FOR COMPUTER ANALYSIS OF COMPUTER GENERATED COMMUNICATIONS TO PRODUCE INDICATIONS AND WARNING OF DANGEROUS BEHAVIOR

DECISION ON PETITION TO MAKE SPECIAL

This is a decision on the Petition To Make Special under MPEP 708.02, XI: Invention for Countering Terrorism, filed November 28, 2001.

A grantable petition to make an application special under 37 C.F.R. 1.102(d), and in accordance with MPEP 708.02, XI, for an invention which contributes to the countering of terrorism, must include the petition fee under 37 CFR 1.17(i). The petition must also be accompanied by a statement explaining how the invention contributes to countering terrorism. The types of technology for countering terrorism could include, but are not limited to, systems for detecting/identifying explosives, aircraft sensors/security systems, and vehicular barricades/disabling systems.

The statements made in the petition do not show how the technology of the instant application directly contributes to the countering of terrorism. Psychological profiles of individuals do not counter terrorism directly and do not fall into the category of invention as outlined above.

Accordingly, the petition is **DENIED**.

Petitioner is given TWO MONTHS from the date of this decision to request reconsideration and supplement the original petition as appropriate.

The application file will be returned to the Technology Center's central files storage area to await action in its regular turn.

Reinhard J. Eisenzopf
Special Program Examiner
Technology Center 2600
(703) 305-4711

UNITED STATES PATENT AND TRADEMARK OFFICE

Commissioner for Patents
United States Patent and Trademark Office
P.O. Box 1450
Alexandria, VA 22313-1450
www.uspto.gov

3-13-07

gm

In re application of	:	
Kimio Inoue	:	DECISION
Serial No. 09/767,885	:	DENYING
Filed: January 24, 2001	:	PETITION
For: Screw Set for Extruder	:	

This is a decision on the REPLY TO NOTIFICATION OF NON-COMPLIANT APPEAL BRIEF/PETITION UNDER 37 CFR 1.181, filed on February 2, 2007.

An appeal brief was timely filed October 25, 2006, appealing the examiner's final rejection of claims 10-13, claim 10 being the sole independent claim. On January 23, 2007, the examiner issued a Notification of Non-Compliant Appeal Brief (37 CFR 41.37), which held the brief to be defective for (1) failing to refer to the independent claim by number; and (2) including arguments within the 'grounds of rejection to be reviewed on appeal' section.

On February 2, 2007, the instant petition was timely filed and is before the Director of Technology Center 1700 for consideration. The petition requests withdrawal of the Notification of Non-Compliant Appeal Brief.

The petition is **DENIED** for the reasons below.

DECISION

Petitioner argues that there is no requirement in 37 CFR 41.37 that the summary of the claimed subject matter refer to the independent claims by number, and further that there is only one independent claim on appeal in this case, so claim numbers are not required for clarity.

In general, the summary section should refer to the claims by number for clarity, so that the Board of Patent Appeals and Interferences can readily identify the claims being discussed. This is particularly true since dependent claims may also be addressed in the summary. However, as noted by petitioner, only one independent claim is on appeal in this case, and were this the only issue, the brief would not be held defective.

Petitioner likewise argues that 37 CFR 41.37 does not prohibit including arguments in the description of the grounds of rejection to be reviewed. However, 37 CFR 41.37(b)(1)(vi) requires a *concise* statement of each ground of rejection presented for review. MPEP 1205.02 expounds upon this as follows:

> (vi) Grounds of rejection to be reviewed on appeal. A concise statement of each ground of rejection presented for review. For example, the statement "Whether claims 1 and 2 are unpatentable" would not comply with the rule, while the statements "Whether claims 1 and 2 are unpatentable under 35 U.S.C. 103 over Smith in view of Jones," and "Whether claims 1 and 2 are unpatentable under 35 U.S.C. 112, first paragraph, as being based on a nonenabling disclosure" would comply with the rule. The statement cannot include **any** argument concerning the merits of the ground of rejection presented for review. Arguments should be included in the "Argument" section of the brief.

In the instant case, the grounds section impermissibly includes five lines of argument, which should properly be located in the argument section of the brief. Thus the statement is not concise and the determination that the Brief was defective under 37 CFR 41.37 was correct.

Applicant's petition is therefore **DENIED**.

A corrected brief is due within the time period specified on the Notice of Non-Compliant Appeal Brief.

JMStone

Jacqueline M. Stone, Director
Technology Center 1700
Chemical and Materials Engineering

OBLON, SPIVAK, MCCLELLAND, MAIER & NEUSTADT, P.C.
1940 DUKE STREET
ALEXANDRIA VA 22314

UNITED STATES PATENT AND TRADEMARK OFFICE

Commissioner for Patents
United States Patent and Trademark Office
P.O. Box 1450
Alexandria, VA 22313-1450
www.uspto.gov

Paper No. 12

HANSRA PATENT SERVICES
4525 GLEN MEADOWS PLACE
BELLINGHAM, WA 98226

COPY MAILED

AUG 29 2005

OFFICE OF PETITIONS

In re Application of :
Steve McCarthy, et al. :
Application No. 09/767,894 :
Filed: January 22, 2001 :
Attorney Docket No. 3123-342 :

ON PETITION

This is a decision on the petition under 37 CFR 1.137(b), filed June 6, 2005, to revive the above-identified application.

The petition is **GRANTED.**

The above-identified application became abandoned for failure to reply in a timely manner to the final Office action mailed March 1, 2004, which set a shortened statutory period for reply of three (3) months. No extensions of time under the provisions of 37 CFR 1.136(a) were obtained. Accordingly, the application became abandoned on June 2, 2004.

The petition satisfies the requirement of 37 CFR 1.137 (b) in that petitioner has supplied (1) the reply in the form of an Amendment and a Request for Continued Examination (RCE); (2) the petition fee of $1500; and (3) the required statement of unintentional delay have been received. Accordingly, the petition filed June 6, 2005 is accepted as having been unintentionally delayed.

Telephone inquiries concerning this decision should be directed to the undersigned at (571) 272-3229.

The application file is being forwarded to Technology Center 2100, Art Unit 2133 for processing the Request for Continued Examination (RCE) under 37 CFR 1.114 filed with the instant petition.

Retta Williams

Retta Williams
Petitions Examiner
Office of Petitions
Office of the Deputy Commissioner
for Patent Examination Policy

UNITED STATES PATENT AND TRADEMARK OFFICE

Commissioner for Patents
United States Patent and Trademark Office
P.O. Box 1450
Alexandria, VA 22313-1450
www.uspto.gov

HANSRA PATENT SERVICES
4525 GLEN MEADOWS PLACE
BELLINGHAM, WA 98226

COPY MAILED

APR 27 2007

OFFICE OF PETITIONS

In re Application of	:	
Steve McCarthy et al	:	
Application No. 09/767,894	:	DECISION ON PETITION
Filed: January 22, 2001	:	TO WITHDRAW
Attorney Docket No. 3123-342	:	FROM RECORD
	:	

This is a decision on the Request to Withdraw as attorney or agent of record under 37 C.F.R. § 1.36(b), filed October 23, 2006.

The request is **APPROVED**.

A grantable request to withdraw as attorney/agent of record must be signed by every attorney/agent seeking to withdraw or contain a clear indication that one attorney is signing on behalf of another/others. A request to withdraw will not be approved unless at least 30 (thirty) days would remain between the date of approval and the later of the expiration date of a time to file a response or the expiration date of the maximum time period which can be extended under 37 C.F.R. § 1.136(a).

The request was signed by Tejpal Hansra, the sole attorney of record.

Applicant is reminded that there is no attorney of record at this time.

The request to change the correspondence of record is not acceptable as the requested correspondence address is not that of: (1) the first named signing inventor; or (2) an intervening assignee of the entire interest under 37 C.F.R 3.71. All future communications from the Office will be directed to the first named signing inventor or the assignee of the entire interest at the first copied address below until otherwise properly notified by the applicant.

Telephone inquiries concerning this decision should be directed to Irvin Dingle at (571) 272-3210.

Irvin Dingle
Petitions Examiner
Office of Petitions

cc: Steve McCarthy
223 Eagle Avenue
Mead, CO 80542

cc: Seagate Technology LLP
Intellectual Property – SHK2LG
1280 Disc Drive
Shakopee, MN 55379

UNITED STATES PATENT AND TRADEMARK OFFICE

UNITED STATES DEPARTMENT OF COMMERCE
United States Patent and Trademark Office
Address: COMMISSIONER FOR PATENTS
P.O. Box 1450
Alexandria, Virginia 22313-1450
www.uspto.gov

APPLICATION NUMBER	FILING OR 371 (c) DATE	FIRST NAMED APPLICANT	ATTY. DOCKET NO./TITLE
09/767,894	01/22/2001	Steve McCarthy	3123-342

CONFIRMATION NO. 2562

OC000000023560343

OC000000023560343

32093
HANSRA PATENT SERVICES
4525 GLEN MEADOWS PLACE
BELLINGHAM, WA 98226

Date Mailed: 04/26/2007

NOTICE REGARDING CHANGE OF POWER OF ATTORNEY

This is in response to the Power of Attorney filed 10/23/2006.

- The withdrawal as attorney in this application has been accepted. Future correspondence will be mailed to the new address of record. 37 CFR 1.33.

Office of Initial Patent Examination (571) 272-4000, or 1-800-PTO-9199
FORMER ATTORNEY/AGENT COPY

UNITED STATES PATENT AND TRADEMARK OFFICE

UNITED STATES DEPARTMENT OF COMMERCE
United States Patent and Trademark Office
Address: COMMISSIONER FOR PATENTS
P.O. Box 1450
Alexandria, Virginia 22313-1450
www.uspto.gov

APPLICATION NUMBER	FILING OR 371 (c) DATE	FIRST NAMED APPLICANT	ATTY. DOCKET NO./TITLE
09/767,894	01/22/2001	Steve McCarthy	3123-342

CONFIRMATION NO. 2562

OC000000023560407

OC000000023560407

STEVE MCCARTHY
223 EAGLE AVENUE
MEAD, CO 80542

Date Mailed: 04/26/2007

NOTICE OF ACCEPTANCE OF POWER OF ATTORNEY

This is in response to the Power of Attorney filed 10/23/2006.

The Power of Attorney in this application is accepted. Correspondence in this application will be mailed to the above address as provided by 37 CFR 1.33.

Office of Initial Patent Examination (571) 272-4000, or 1-800-PTO-9199
ATTORNEY/APPLICANT COPY

UNITED STATES PATENT AND TRADEMARK OFFICE

Commissioner for Patents
United States Patent and Trademark Office
P.O. Box 1450
Alexandria, VA 22313-1450
www.uspto.gov

STEVE MCCARTHY
223 EAGLE AVENUE
MEAD, CO 80542

COPY MAILED

APR 27 2007

OFFICE OF PETITIONS

In re Application of	:	
Steve McCarthy et al	:	
Application No. 09/767,894	:	DECISION ON PETITION
Filed: January 22, 2001	:	
Attorney Docket No. 3123-342	:	

This is a decision on the petition, filed July 24, 2006, which is being treated as a petition under 37 CFR 1.181 (no fee) requesting withdrawal of the holding of abandonment in the above-identified application.

The petition is **DISMISSED**.

Any request for reconsideration of this decision should be filed within two (2) months from the mail date of this decision. *Note* 37 CFR 1.181(f). The request for reconsideration should include a cover letter and be entitled as a "Renewed Petition under 37 CFR 1.181 to Withdraw the Holding of Abandonment."

This application was held abandoned for failure to timely pay the issue and publication fees on or before December 23, 2005, as required by the Notice of Allowance and Fee(s) Due (Notice), mailed September 23, 2005.

Petitioner asserts that the Notice dated September 23, 2005 was not received.

A review of the written record indicates no irregularity in the mailing of the Notice, and, in the absence of any irregularity, there is a strong presumption that the Notice was properly mailed to the practitioner at the address of record. This presumption may be overcome by a showing that the Notice was not in fact received. In this regard, the showing required to establish the failure to receive the Notice must consist of the following:

1. a statement from practitioner stating that the Notice was not received by the practitioner;
2. a statement from the practitioner attesting to the fact that a search of the file jacket and docket records indicates that the Notice was not received; and

3. a copy of the docket record where the nonreceived Notice would have been entered had it been received must be attached to and referenced in the practitioner'statement.

See MPEP § 711.03(c) under subheading "Petition to Withdraw Holding of Abandonment Based on Failure to Receive Office Action," and "Withdrawing the Holding of Abandonment When Office Actions Are Not Received," 1156 Official Gazette 53 (November 16, 1993).

The petition fails to satisfy all of the above-stated requirements. In this regard, there was no showing that the Notice was not in fact received.

Accordingly, absent the required evidence to establish nonreceipt of the Notice of Allowance, the petition requesting withdrawal of the holding of abandonment cannot be granted at this time.

If petitioner cannot supply the evidence necessary to withdraw the holding of abandonment, or simply does not wish to, petitioner should consider filing a petition under 37 CFR 1.137(b) stating that the delay was unintentional. Public Law 97-247, § 3, 96 Stat. 317 (1982), which revised patent and trademark fees, amended 35 U.S.C. § 41(a)(7) to provide for the revival of an "unintentionally" abandoned application without a showing that the delay in prosecution or in late payment of the issue fee was "unavoidable." This amendment to 35 U.S.C. § 41(a)(7) has been implemented in 37 CFR 1.137(b). An "unintentional" petition under 37 CFR 1.137(b) must be accompanied by the $1500 petition fee.

The filing of a petition under 37 CFR 1.137(b) cannot be intentionally delayed and therefore must be filed promptly. A person seeking revival due to unintentional delay cannot make a statement that the delay was unintentional unless the entire delay, including the date it was discovered that the application was abandoned until the filing of the petition to revive under 37 CFR 1.137(b), was unintentional. A statement that the delay was unintentional is not appropriate if petitioner intentionally delayed the filing of a petition for revival under 37 CFR 1.137(b).

Further correspondence with respect to this matter should be addressed as follows:

By Mail: Mail Stop PETITION
Commissioner for Patents
P. O. Box 1450
Alexandria, VA 22313-1450

By hand: U. S. Patent and Trademark Office
Customer Service Window, Mail Stop Petitions
Randolph Building
401 Dulany Street
Alexandria, VA 22314

By facsimile: **(571) 273-8300**
Attn: Office of Petitions

Telephone inquiries concerning this decision should be directed to Irvin Dingle at (571) 272-3210.

Irvin Dingle
Petition Examiner
Office of Petitions

UNITED STATES PATENT AND TRADEMARK OFFICE

Commissioner for Patents
United States Patent and Trademark Office
P.O. Box 1450
Alexandria, VA 22313-1450
www.uspto.gov

Patricia A. Sheehan
Cesari And McKenna, LLP
88 Black Falcon Avenue
Boston MA 02210

COPY MAILED

JUN 2 0 2008

OFFICE OF PETITIONS

In re Application of	:	
Steve McCarthy, et al.	:	
Application No. 09/767,894	:	DECISION ON PETITION
Filed: January 22, 2001	:	
Attorney Docket No. 3123-342	:	

This is a decision on the petition under the unintentional provisions of 37 CFR 1.137(b) filed December 5, 2007, to revive the above-identified application.

The petition is **GRANTED**.

This application became abandoned for failure to timely pay the issue and publication fees on or before December 23, 2005, as required by the Notice of Allowance and Fee(s) Due, mailed September 23, 2005. Accordingly, the date of abandonment of this application is December 24, 2005. The Notice of Abandonment was mailed April 26, 2006.

The petition satisfies the requirements of 37 CFR 1.137(b) in that petitioner has supplied (1) the reply in the form of payment of the issue fee of $1,440 and the publication fee of $300, (2) the petition fee of $1,540; and (3) a proper statement of unintentional delay.

Telephone inquiries concerning this decision should be directed to Terri Williams at (571) 272-2991.

This application is being referred to the Office of Data Management for processing into a patent.

Chris Bottorff
Petitions Examiner
Office of Petitions

UNITED STATES PATENT AND TRADEMARK OFFICE

COMMISSIONER FOR PATENTS
UNITED STATES PATENT AND TRADEMARK OFFICE
P.O. BOX 1450
ALEXANDRIA, VA 22313-1450
www.uspto.gov

Paper No. 7

BACON & THOMAS, PLLC
4th Floor
625 Slaters Lane
Alexandria, VA 22314-1176

COPY MAILED

FEB 25 2004

OFFICE OF PETITIONS

In re Application of

Chung, et al.

Application No. 09/767,919

Filed: January 24, 2001

Attorney Docket No. EM/LEE/6474

DECISION ON PETITION

This is a decision on the petition under 37 CFR 1.137(b), filed February 9, 2004, to revive the above-identified application.

The petition is **GRANTED**.

The above-cited application became abandoned for failure to reply in a timely manner to the non-final Office action mailed November 6, 2002, which set a shortened statutory period for reply of three (3) months. No response to the non-final Office action was received within the allowable period. Accordingly, the application became abandoned on February 7, 2003. A Notice of Abandonment was mailed on May 20, 2003.

The amendment filed February 9, 2004, is noted and made of record.

The application is being forwarded to Technology Center 2800 for further processing.

Telephone inquiries concerning this decision should be directed to the undersigned at (703) 305-0010.

Kenya A. McLaughlin
Petitions Attorney
Office of Petitions

UNITED STATES PATENT AND TRADEMARK OFFICE

COMMISSIONER FOR PATENTS
UNITED STATES PATENT AND TRADEMARK OFFICE
WASHINGTON, D.C. 20231
www.uspto.gov

MAIL

Paper No. 11

APR 0 1 2003

DIRECTOR OFFICE
TECHNOLOGY CENTER 2100

Wilmer, Cutler & Pickering
2445 M Street, N.W.
Washington, DC 20037

In re Application of: Kenneth Clubb, et al.	)	
Application No. 09/767,951	)	
Filed: January 24, 2001	)	**DECISION ON REQUEST FOR**
For: A SYSTEM AND METHOD TO	)	**WITHDRAWAL AS ATTORNEY**
PUBLISH INFORMATION FROM	)	
SERVERS TO REMOTE MONITOR	)	
DEVICES	)	

This is a decision on the Request To Withdraw from Representation filed March 19, 2003.

A grantable request to withdraw as attorney of record should indicate thereon the present mailing addresses of the attorney(s) who is/are withdrawing from the record and of the applicant. The request for withdrawal must be signed by every attorney seeking to withdraw or contain a clear indication that one attorney is signing on behalf of another/others. A request to withdraw will not be approved unless at least 30 (thirty) days would remain between the date of approval and the later of the expiration date of a time to file a response or the expiration date of the maximum time period which can be extended under 37 C.F.R. § 1. 136(a). The effective date of withdrawal being the date of decision and not the date of request. See M.P.E.P. § 402.06. 37 C.F.R. § 1.36 further requires that the applicant or patent owner be notified of the withdrawal of the attorney or agent.

The request is **GRANTED**.

All future communications from the Office will be directed to the below-listed address until otherwise notified by applicant. This correspondence address is provided by the withdrawn attorney(s). Applicant is reminded of the obligation to promptly notify the Patent and Trademark Office (Office) of any change in correspondence address to ensure receipt of all communications from the Office.

For Vincent N. Trans
Special Programs Examiner
Technology Center 2100
Computer Architecture and Software
(703) 305-9750

cc: Brad Aaron
Aether Systems, Inc.
11460 Cronridge Drive
Owings Mills, MD 21117

UNITED STATES PATENT AND TRADEMARK OFFICE

COMMISSIONER FOR PATENTS
UNITED STATES PATENT AND TRADEMARK OFFICE
P.O. BOX 1450
ALEXANDRIA, VA 22313-1450
www.uspto.gov

MAIL

Paper No. 13

JUL 29 2004

DIRECTOR OFFICE
TECHNOLOGY CENTER 2600

YA- CHIAO CHANG
805 THIRD AVENUE
NEW YORK NY 10022

In re Application of
Hsien-Ying Chou
Application No. 09/767,955
Filed: January 24, 2001
For: AUTO-IMPROVING DISPLAY FLICKER METHOD

DECISION ON PETITION TO WITHDRAW HOLDING OF ABANDONMENT

This is a decision on the request filed March 15, 2004, pursuant to 37 C.F.R. 1.181 to withdraw the holding of abandonment of the above-identified application. No fee is required.

This application became abandoned due to failure to timely file the issue fee in response to the Notice of Allowance and Issue Fee Due mailed November 4, 2003. A Notice of Abandonment has not yet been mailed.

Petitioner asserts that the Notice of Allowance mailed November 4, 2003 was never received. In support therefore, A statement was made that a search of the contents of the file jacket and docket records reveal no evidence of receipt. It is not clear if this statement is the personal statement from the Practitioner of record or from the Applicants. Copies of the docket records have also been included to corroborate petitioner's claim.

A review of the file finds that the U.S. Postal Service returned the original Notice of Allowance and Issue Fee as undeliverable on November 26, 2003. Although, there was no finding of irregularity in the correspondence address, there was an obvious irregularity in mailing. The Patent and Trademark Office regrets any inconvenience to Petitioner.

Therefore, the holding of Abandonment withdrawn. Also, the Notice of Allowance and Issue Fee Due mailed November 4, 2003 (paper no. 11) is hereby vacated.

The petition is **GRANTED**.

Since it has been established that the Notice of Allowance was not received, it is presumed that Applicant also failed to receive the Notice of Allowability. The application will be forwarded to the Technology Center's technical support staff for mailing of a new Notice of Allowance and Issue Fee Due, as well as a copy of the Notice of Allowability and the examiner's reasons for allowance. The three (3) month non-extendable time period for paying the issue fee will be set to run from the mailing date of the Notices.

Dwayne D. Bost
Special Program Examiner
Technology Center 2600
Communications

UNITED STATES PATENT AND TRADEMARK OFFICE

COMMISSIONER FOR PATENTS
UNITED STATES PATENT AND TRADEMARK OFFICE
WASHINGTON, D.C. 20231
www.uspto.gov

Paper No. 9

Rader, Fishman & Grauer PLLC
Lion Building
1233-20th Street, N.W., Suite 501
Washington, DC 20036

COPY MAILED

FEB 27 2003

OFFICE OF PETITIONS

In re Application of :
Tatsuya Takaoka :
Application No. 09/767,961 : ON PETITION
Filed: January 24, 2001 :
Attorney Docket No. P100158-00024 :

This is a decision on the petition under 37 CFR 1.137(b), filed February 11, 2003, to revive the above-identified application.

The petition is **GRANTED**.

The above-identified application became abandoned for failure to reply in a timely manner to the Restriction Requirement mailed May 13, 2002, which set a shortened statutory period for reply of thirty (30) days. No extensions of time under the provisions of 37 CFR 1.136(a) were obtained. Accordingly, the above-identified application became abandoned on June 14, 2002.

37 CFR 1.137(b)(3) requires a statement that the entire delay in filing the required reply from the due date for the reply until the filing of a grantable petition pursuant to 37 CFR 1.137(b) was unintentional. If the statement contained in the instant petition varies from the language required by 37 CFR 1.137(b)(3), the statement contained in the instant petition is being construed as the statement required by 37 CFR 1.137(b)(3) and petitioner must notify the Office if this is **not** a correct interpretation of the statement contained in the instant petition.

Telephone inquiries concerning this decision should be directed to Cheryl Gibson-Baylor at (703)308-5111, or in her absence, Sherry Brinkley at (703)305-9220.

The application file is being forwarded to Technology Center 1700, Art Unit 1733.

Cheryl Gibson Baylor

Cheryl Gibson-Baylor
Petitions Examiner
Office of Petitions
Office of the Deputy Commissioner
for Patent Examination Policy

Sherry Brinkley

Sherry Brinkley
Petitions Examiner

UNITED STATES PATENT AND TRADEMARK OFFICE

Commissioner for Patents
United States Patent and Trademark Office
P.O. Box 1450
Alexandria, VA 22313-1450
www.uspto.gov

NOVO NORDISK, INC.
PATENT DEPARTMENT
100 COLLEGE ROAD WEST
PRINCETON NJ 08540

COPY MAILED

FEB 15 2007

OFFICE OF PETITIONS

In re Application of	:	
Jensen et al.	:	
Application No. 09/767,981	:	ON PETITION
Filed: January 23, 2001	:	
Attorney Docket No. 4343-214-US	:	

This is a decision on the petition under the unintentional provisions of 37 CFR 1.137(b), filed May 26, 2004, to revive the above-identified application.

The petition is **GRANTED**.

The application became abandoned for failure to timely reply within the meaning of 37 CFR 1.113 to the final Office action, mailed April 21, 2003, which set a shortened statutory period for reply of three (3) months. A timely Notice of Appeal and Appeal Fee were filed October 21, 2003. Accordingly, the application became abandoned on December 22, 2003.

The petition satisfies the requirements of 37 CFR 1.137(b) in that petitioner has supplied (1) the reply in the form of a continuing application under 37 CFR 1.53(b); (2) the petition fee of $1300; and (3) a proper statement of unintentional delay.

This application is being revived solely for purposes of continuity. As continuity has been established by this decision, the application is again abandoned in favor of continuing application No. 10/854,620.

Telephone inquiries concerning this decision should be directed to Ramesh Krishnamurthy at (571) 272-4914, or in his absence to the undersigned at (571) 272 - 7099.

David Bucel
Petitions Examiner
Office of Petitions

UNITED STATES PATENT AND TRADEMARK OFFICE

Commissioner for Patents
United States Patent and Trademark Office
P.O. Box 1450
Alexandria, VA 22313-1450
www.uspto.gov

LEE, HONG, DEGERMAN, KANG & SCHMADEKA
660 S. FIGUEROA STREET
Suite 2300
LOS ANGELES, CA 90017

COPY MAILED
SEP 28 2007
OFFICE OF PETITIONS

In re Application of

Seung-Ho Lee

Application No. 09/768,018

Filed: January 23, 2001

Attorney Docket No. 2018-3-10

DECISION ON PETITION

This is a decision on the petition under 37 CFR 1.137(b), filed January 17, 2007, to revive the above-identified application.

The petition is **GRANTED**.

The above-cited application became abandoned for failure to reply in a timely manner to the final Office action mailed April 19, 2004, which set a shortened statutory period for reply of three (3) months. A response was filed on July 22, 2004. An Advisory Action was mailed on October 14, 2004, informing applicant that the response of July 22, 2004, failed to place the application in condition for allowance. No further responses were received within the allowable period, and the application became abandoned on July 20, 2004.

Effective December 1, 1997, the provisions of 37 CFR 1.137(b) now provide that where the delay in reply was unintentional, a petition may be filed to revive an abandoned application or a lapsed patent pursuant to 37 CFR 1.137(b). A grantable petition pursuant to 37 CFR 1.137(b) must be accompanied by:

(1) the required reply, unless previously filed. In a non-provisional application abandoned for failure to prosecute, the required reply may be met by the filing of a continuing application. In an application or patent, abandoned or lapsed for failure to pay the issue fee, or any portion thereof, the required reply must be the payment of the issue fee or any outstanding balance thereof.

(2) the petition fee as set forth in 37 CFR 1.17(m);

(3) a statement that the entire delay in filing the required reply from the due date for the reply until the filing of a grantable petition pursuant to 37 CFR 1.137(b) was unintentional. The Commissioner may require additional information where there is a question whether the delay was unintentional; and

(4) any terminal disclaimer (and fee set forth in 37 CFR 1.20(d)) required pursuant to 37 CFR 1.137(c).

The instant petition does not satisfy the requirements of item (3) above.

As to Item (3), the *Manual of Paten Examining Procedure*, Section 7711.03(c) provides, in pertinent part, that:

> >Where a petition pursuant to 37 CFR 1.137(b) is not filed within 1 year of the date of abandonment of the application (note that abandonment takes place by operation of law, rather than by the mailing of a Notice of Abandonment), the Office may require:
>
> (A) further information as to when the applicant (or the applicant's representative) first became aware of the abandonment of the application; and
>
> (B) a showing as to how the delay in discovering the abandoned status of the application occurred despite the exercise of due care or diligence on the part of the applicant (or applicant's representative).<
>
> To avoid delay in the consideration of the merits of a petition under 37 CFR **>1.137(b)< in instances in which such petition was not filed within 1 year of the date of abandonment of the application, applicants should include:
>
> (A) the date that the applicant first became aware of the abandonment of the application; and
>
> (B) a showing as to how the delay in discovering the abandoned status of the application occurred despite the exercise of due care or diligence on the part of the applicant.
>
> In either instance, applicant's failure to carry the burden of proof to establish that the "entire" delay was "unavoidable" or "unintentional" may lead to the denial of a petition under 37 CFR 1.137(a) or 37 CFR 1.137(b), regardless of the circumstances that originally resulted in the abandonment of the application.

Petitioner did not provide not explanation for year delay in filing the instant petition. Accordingly, the renewed petition must be accompanied by an explanation for said delay including, but not limited to, the considerations provided in MPEP § 711.03(c) cited above.

Further correspondence with respect to this matter should be addressed as follows:

By mail:

Mail Stop Petitions
Commissioner for Patents
United States Patent and Trademark Office
Box 1450
Alexandria, VA 22313-1450

By facsimile: (571) 273-8300
Attn: Office of Petitions

Telephone inquiries concerning this decision may be directed to the undersigned at (571) 272-3222.

Kenya A. McLaughlin
Petitions Attorney
Office of Petitions

UNITED STATES PATENT AND TRADEMARK OFFICE

Commissioner for Patents
United States Patent and Trademark Office
P.O. Box 1450
Alexandria, VA 22313-1450
www.uspto.gov

LEE, HONG, DEGERMAN, KANG & SCHMADEKA
660 S. FIGUEROA STREET
Suite 2300
LOS ANGELES CA 90017

COPY MAILED

APR 08 2008

OFFICE OF PETITIONS

In re Application of	:	
SEUNG-HO LEE	:	
Application No. 09/768,018	:	ON PETITION
Filed: January 23, 2001	:	
Attorney Docket No. 2018-3-10	:	

After further review, the decision on petition mailed September 28, 2007 is hereby **VACATED**. A new decision on the petition appears below.

This is a decision on the petition under the unintentional provisions of 37 CFR 1.137(b), filed January 17, 2007, to revive the above-identified application.

The petition is **DISMISSED**.

Any request for reconsideration of this decision must be submitted within TWO (2) MONTHS from the mail date of this decision. Extensions of time under 37 CFR 1.136(a) are permitted. The reconsideration request should include a cover letter entitled "Renewed Petition under 37 CFR 1.137(b)." This is **not** a final agency action within the meaning of 5 U.S.C. § 704.

The above-cited application became abandoned for failure to reply in a timely manner to the final Office action mailed April 19, 2004, which set a shortened statutory period for reply of three (3) months. A response was filed on July 22, 2004. An Advisory Action was mailed on October 14, 2004, informing applicant that the response of July 22, 2004, failed to place the application in condition for allowance. No further responses were received within the allowable period, and the application became abandoned on July 20, 2004.

A grantable petition under 37 CFR 1.137(b) must be accompanied by: (1) the required reply, unless previously filed; (2) the petition fee as set forth in 37 CFR 1.17(m); (3) a statement that the entire delay in filing the required reply from the due date for the reply until the filing of a grantable petition pursuant to 37 CFR 1.137(b) was unintentional; and (4) any terminal disclaimer (and fee as set forth in 37 CFR 1.20(d)) required by 37 CFR 1.137(d). Where there is a question as to whether either the abandonment or the delay in filing a petition under 37 CFR 1.137 was unintentional, the Director may require additional information. See MPEP 711.03(c)(II)(C) and (D). The instant petition lacks item(s) item 3.

Applicant should note that the form used to request revival of the above-referenced application, PTO/SB64 is a three page form. The form submitted by applicant is only the first page of the form. In this regard, the petition as filed by applicant does not include a proper signature or the statement that the entire delay was unintentional.

Further correspondence with respect to this matter should be addressed as follows:

By Mail: Mail Stop PETITION
Commissioner for Patents
P. O. Box 1450
Alexandria, VA 22313-1450

By hand: U. S. Patent and Trademark Office
Customer Service Window, Mail Stop Petitions
Randolph Building
401 Dulany Street
Alexandria, VA 22314

The centralized facsimile number is **(571) 273-8300.**

Telephone inquiries concerning this decision should be directed to the undersigned at (571) 272-3687.

Anthony Knight
Supervisor
Office of Petitions

UNITED STATES PATENT AND TRADEMARK OFFICE

Commissioner for Patents
United States Patent and Trademark Office
P.O. Box 1450
Alexandria, VA 22313-1450
www.uspto.gov

LEE, HONG, DEGERMAN, KANG & SCHMADEKA
660 S. FIGUEROA STREET
Suite 2300
LOS ANGELES CA 90017

COPY MAILED
DEC 09 2008

In re Application of	:	
SEUNG-HO LEE	:	
Application No. 09/768,018	:	ON PETITION
Filed: January 23, 2001	:	
Attorney Docket No. 2018-3-10	:	

This is a decision on the renewed petition under the unintentional provisions of 37 CFR 1.137(b), filed June 9, 2008, to revive the above-identified application.

The petition is **GRANTED**.

The above-cited application became abandoned for failure to reply in a timely manner to the final Office action mailed April 19, 2004, which set a shortened statutory period for reply of three (3) months. The response filed July 22, 2004 did not place the application in condition for allowance. No further response was received. The application became abandoned on July 20, 2004.

The petition satisfies the requirements of 37 CFR 1.137(b) in that petitioner has supplied (1) the reply in the form of an amendment, (2) the petition fee of $750, and (3) a proper statement of unintentional delay.

This application is being referred to Technology Center AU 2623 for appropriate action by the Examiner in the normal course of business on the reply received

Telephone inquiries concerning this decision should be directed to the undersigned at (571) 272-3687.

Anthony Knight
Supervisor
Office of Petitions

UNITED STATES PATENT AND TRADEMARK OFFICE

COMMISSIONER FOR PATENTS
UNITED STATES PATENT AND TRADEMARK OFFICE
WASHINGTON, D.C. 20231
www.uspto.gov

KNOBBE MARTENS OLSON & BEAR LLP
620 NEWPORT CENTER DRIVE
SIXTEENTH FLOOR
NEWPORT BEACH, CA 92660

COPY MAILED

DEC 1 1 2001

OFFICE OF PETITIONS

In re Application of	:
(Inventors Unknown)	:
Application No. 09/768,031	: NOTICE
Filed: January 22, 2001	:
Attorney Docket No. PERCUS.071C1	:

This is a response to the letter filed July 20, 2001, requesting that the above-identified application be accorded a filing date of January 23, 2001.

The filing date of this application is January 22, 2001. If counsel believes that the application is entitled to a different filing date, entitlement to the different filing date must be established by way of a petition, e.g., a petition under 37 CFR 1.10(c) or (d).

This application is being forwarded to the Office of Initial Patent Examination Division with the presently accorded filing date of January 22, 2001.

Telephone inquiries concerning this matter may be directed to Karen Creasy at (703) 305-8859.

Brian Hearn
Senior Petitions Examiner
Office of Petitions
Office of the Deputy Commissioner
for Patent Examination Policy

UNITED STATES PATENT AND TRADEMARK OFFICE

Commissioner for Patents
United States Patent and Trademark Office
Washington, D.C. 20231
www.uspto.gov

Paper No. 11

Ted R. Rittmaster
Foley and Lardner
2029 Century Park East
Suite 3500
Los Angeles, CA 90067-3021

COPY MAILED

AUG 1 5 2002

OFFICE OF PETITIONS

In re Application of :
Ronald J. Lebel, et al. :
Application No. 09/768,035 :
Filed: January 22, 2001 :
Attorney Docket No. USP-1076-B :

DECISION GRANTING PETITION
UNDER 37 CFR 1.137(f)

This is a decision on the petition filed July 30, 2002 and supplemented on August 9, 2002, to revive the instant nonprovisional application under the unintentional provisions of 37 CFR 1.137(f).

The petition is **GRANTED**.

Petitioner states that the instant non-provisional application is the subject of an application filed in a foreign country on July 20, 2001. However, the U. S. Patent and Trademark Office was unintentionally not notified of this filing within 45 days subsequent to the filing of the subject application in a foreign country.

In view of the above, this application became abandoned pursuant to 35 U.S.C. § 122(b)(2)(B)(iii) and 37 CFR 1.213(c) for failure to timely notify the Office of the filing of an application in a foreign country, or under a multilateral international agreement, that requires publication of applications 18 months after filing.

A petition under 37 CFR 1.137(f) must be accompanied by:

(1) the reply which is met by notification of such filing in a foreign country or under a multinational treaty;

(2) the petition fee as set forth in 37 CFR 1.17(m); and

(3) a statement that the entire delay in filing the required reply from the due date for the reply until the filing of a grantable petition was unintentional.

The instant petition has been found in compliance with 37 CFR 1.137(f). However, while the statement of unintentional delay does not comply with the rule, the statement presented will be construed as meaning that "the entire delay in filing the required reply [Notice to Rescind Previous Nonpublication Request Under 35 U.S.C. § 122(b)(2)(B)(ii)] until the filing of a grantable petition was unintentional." Accordingly, the failure to timely notify the Office of a foreign or international filing within 45 days as provided by 35 USC 122(b)(2)(B)(iii) is accepted as having been unintentionally delayed.

The previous Request and Certification under 35 USC 122(b)(2)(B)(i) has been rescinded. A Corrected Filing Receipt which sets forth the projected publication date of November 21, 2002 accompanies this decision on petition.

Telephone inquiries concerning this decision should be directed to Marianne Morgan at (703) 306-3475.

This application is being forwarded to Technology Center Art Unit 3742 for examination in due course.

Frances Hicks

Frances M. Hicks
Lead Petitions Examiner
Office of Petitions
Office of the Deputy Commissioner
for Patent Examination Policy

ATTACHMENT: Corrected Filing Receipt

UNITED STATES PATENT AND TRADEMARK OFFICE

Commissioner for Patents
United States Patent and Trademark Office
Washington, D.C. 20231
www.uspto.gov

Paper No. 10

Foley and Lardner
2029 Century Park East
35th Floor
Los Angeles, CA 90067-3021

COPY MAILED

SEP 17 2002

OFFICE OF PETITIONS

In re Application of	:	
Ronald J. Lebel, et al.	:	
Application No. 09/768,043	:	DECISION GRANTING PETITION
Filed: January 22, 2001	:	UNDER 37 CFR 1.137(f)
Attorney Docket No. 047722-0216	:	

This is a decision on the petition filed July 30, 2002 and supplemented on August 9, 2002, to revive the instant nonprovisional application under the unintentional provisions of 37 CFR 1.137(f).

The petition is **GRANTED**.

Petitioner states that the instant non-provisional application is the subject of an application filed in a foreign country on July 20, 2001. However, the U. S. Patent and Trademark Office was unintentionally not notified of this filing within 45 days subsequent to the filing of the subject application in a foreign country.

In view of the above, this application became abandoned pursuant to 35 U.S.C. § 122(b)(2)(B)(iii) and 37 CFR 1.213(c) for failure to timely notify the Office of the filing of an application in a foreign country, or under a multilateral international agreement, that requires publication of applications 18 months after filing.

A petition under 37 CFR 1.137(f) must be accompanied by:

(1) the reply which is met by notification of such filing in a foreign country or under a multinational treaty;

(2) the petition fee as set forth in 37 CFR 1.17(m); and

(3) a statement that the entire delay in filing the required reply from the due date for the reply until the filing of a grantable petition was unintentional.

The instant petition has been found in compliance with the 37 CFR 1.137(f). Accordingly, the failure to timely notify the Office of a foreign or international filing within 45 days as provided by 35 USC 122(b)(2)(B)(iii) and 37 CFR 1.213(c) is accepted as having been unintentionally delayed.

The previous Request and Certification under 35 USC 122(b)(2)(B)(i) has been rescinded. A Corrected Filing Receipt which sets forth the projected publication date of December 26, 2002 accompanies this decision on petition.

Telephone inquiries concerning this decision should be directed to Marianne Morgan at (703) 306-3475.

This application is being forwarded to Technology Center Art Unit 3763 for examination in due course.

Frances Hicks

Frances M. Hicks
Lead Petitions Examiner
Office of Petitions
Office of the Deputy Commissioner
for Patent Examination Policy

ATTACHMENT: Corrected Filing Receipt

UNITED STATES PATENT AND TRADEMARK OFFICE

COMMISSIONER FOR PATENTS
UNITED STATES PATENT AND TRADEMARK OFFICE
WASHINGTON, D.C. 20231
www.uspto.gov

Paper No. 6

MCI WORLDCOM, INC.
TECHNOLOGY LAW DEPARTMENT
1133 19TH STREET NW
WASHINGTON, DC 20036

COPY MAILED

OCT 3 1 2001

OFFICE OF PETITIONS

In re Application of
John K. Gallant, et al.
Application No. 09/768,068
Filed: January 22, 2001
Attorney Docket No. RIC00018

DECISION GRANTING PETITION

This is a decision on the communication styled "Request for Corrected Filing Receipt" filed September 7, 2001, which is being treated as a petition under 37 CFR 1.10(c), requesting that the above-identified application be accorded a filing date of January 22, 2001, instead of the presently accorded date of January 23, 2001.

Petitioners allege that the application was deposited in "Express Mail" service with the U. S. Postal Service, on January 22, 2001. In support, petitioners provide a copy of the Express Mail label, receipt no. EL063963500US, showing a Date-In of January 22, 2001. The same Express Mail receipt number was referred to in the original transmittal letter found in the file. Petitioners request that the application be accorded a filing date of January 22, 2001.

The Office considers the date the paper or fee is shown to have been deposited as "Express Mail" to be the "Date In" on the Express Mail label, MPEP 513. That is the date that verifies that the package was actually mailed. The evidence is convincing that the application was deposited as "Express Mail" with the US Postal Service on January 22, 2001.

The petition is granted.

The application is being returned to Initial Patent Examination Division (OIPE) for correction of the filing date to **January 22, 2001.**

Telephone inquires related to this decision should be directed to the undersigned at (703) 305-9220. Telephone inquiries related to OIPE processing should be directed to their hotline at (703) 308-1202.

Sherry D. Brinkley
Petitions Examiner
Office of Petitions
Office of the Deputy Assistant Commissioner
for Patent Policy and Projects

UNITED STATES PATENT AND TRADEMARK OFFICE

COMMISSIONER FOR PATENTS
UNITED STATES PATENT AND TRADEMARK OFFICE
P.O. BOX 1450
ALEXANDRIA, VA 22313-1450
www.uspto.gov

PAUL A. ROBERTS
TECHNOLOGY LAW DEPARTMENT
MCI WORLDCOM, INC.
1133 19TH STREET NW
WASHINGTON, DC 20036

COPY MAILED
DEC 0 8 2005
OFFICE OF PETITIONS

In re Application of
John K. Gallant
Application No. 09/768,070
Filed: January 22, 2001
Attorney Docket No.: RIC00019

ON PETITION

This is a decision on the petition, filed December 7, 2005, under 37 CFR 1.313(c)(2) to withdraw the above-identified application from issue after payment of the issue fee.

The petition is **GRANTED**.

The above-identified application is withdrawn from issue for consideration of a submission under 37 CFR 1.114 (request for continued examination). See 37 CFR 1.313(c)(2).

Petitioner is advised that the issue fee paid on March 16, 2005, in the above-identified application, cannot be refunded. If, however, the above-identified application is again allowed, petitioner may request that it be applied towards the issue fee required by the new Notice of Allowance.[1]

Telephone inquiries relating to this decision should be directed to the undersigned at (571) 272-3204.

The application is being referred to Technology Center AU 2661 for further processing of the request for continued examination under 37 CFR 1.114.

Sherry D. Brinkley
Petitions Examiner
Office of Petitions

[1]The request to apply the issue fee to the new Notice may be satisfied by completing and returning the new Issue Fee Transmittal Form PTOL-85(b), which includes the following language thereon: "Commissioner for Patents is requested to apply the Issue Fee and Publication Fee (if any) or re-apply any previously paid issue fee to the application identified above." Petitioner is advised that, whether a fee is indicated as being due or not, the Issue Fee Transmittal Form **must** be completed and timely submitted to avoid abandonment. Note the language in bold text on the first page of the Notice of Allowance and Fee(s) Due (PTOL-85).

UNITED STATES PATENT AND TRADEMARK OFFICE
CERTIFICATE OF CORRECTION

PATENT NO.: 6,757,617

DATED: February 26, 2007

INVENTOR(S): Dixon et al.

It is certified that error appears in the above-identified patent and that said Letters Patent is hereby corrected as shown below:

The request for issuing the above-identified correction(s) is hereby approved.

Comments:

The Patent Term Adjustment under 35 U.S.C. 154(b) as indicated on the third page of The Notice of Allowance and Fee(s) Due (PTOL-85) is 250 days. Therefore, replacing the paragraph with the following : "Subject to any disclaimer, the term of this patent is extended or adjusted under 35 U.S.C. 154(b) by 250 days." is approved.

MARC S. HOFF
SUPERVISORY PATENT EXAMINER
TECHNOLOGY CENTER 2800

SPE

2857

Art Unit

UNITED STATES PATENT AND TRADEMARK OFFICE

Commissioner for Patents
United States Patent and Trademark Office
P.O. Box 1450
Alexandria, VA 22313-1450
www.uspto.gov

MCI, INC
TECHNOLOGY LAW DEPARTMENT
1133 19TH STREET NW, 10TH FLOOR
WASHINGTON, DC 20036

COPY MAILED

DEC 20 2004

OFFICE OF PETITIONS

ON PETITION

In re Application of :
John K. Gallant et al :
Application No. 09/768,077 :
Filed: January 22, 2001 :
Attorney Docket No. RIC00015

This is a decision on the petition, filed December 17, 2004, under 37 CFR 1.313(c)(2) to withdraw the above-identified application from issue after payment of the issue fee.

The petition is **GRANTED**.

The above-identified application is withdrawn from issue for consideration of a submission under 37 CFR 1.114 (request for continued examination). See 37 CFR 1.313(c)(2).

Petitioner is advised that the issue fee paid on September 28, 2004 in the above-identified application cannot be refunded. If, however, the above-identified application is again allowed, petitioner may request that it be applied towards the issue fee required by the new Notice of Allowance.[1]

Telephone inquiries should be directed to Irvin Dingle at (571) 272-3210.

This matter will be forwarded to Technology Center AU 2661 for processing of the request for continued examination under 37 CFR 1.114 and for consideration of the concurrently filed Information Disclosure Statement.

Irvin Dingle
Petitions Examiner
Office of Petitions
Office of the Deputy Commissioner
for Patent Examination Policy

---

[1] The request to apply the issue fee to the new Notice may be satisfied by completing and returning the new Issue Fee Transmittal Form PTOL-85(b), which includes the following language thereon: Commissioner for Patents is requested to apply the Issue Fee and Publication Fee (if any) or re-apply any previously paid issue fee to the application identified above. Petitioner is advised that, whether a fee is indicated as being due or not, the Issue Fee Transmittal Form **must** be completed and timely submitted to avoid abandonment. Note the language in bold text on the first page of the Notice of Allowance and Fee(s) Due (PTOL-85).

UNITED STATES PATENT AND TRADEMARK OFFICE

Commissioner for Patents
United States Patent and Trademark Office
P.O. Box 1450
Alexandria, VA 22313-1450
www.uspto.gov

MCI, INC
TECHNOLOGY LAW DEPARTMENT
1133 19TH STREET NW, 10TH FLOOR
WASHINGTON, DC 20036

COPY MAILED

DEC 2 0 2004

OFFICE OF PETITIONS

ON PETITION

In re Application of :
John K. Gallant et al :
Application No. 09/768,077 :
Filed: January 22, 2001 :
Attorney Docket No. RIC00015

This is a decision on the petition, filed December 17, 2004, under 37 CFR 1.313(c)(2) to withdraw the above-identified application from issue after payment of the issue fee.

The petition is **GRANTED**.

The above-identified application is withdrawn from issue for consideration of a submission under 37 CFR 1.114 (request for continued examination). See 37 CFR 1.313(c)(2).

Petitioner is advised that the issue fee paid on September 28, 2004 in the above-identified application cannot be refunded. If, however, the above-identified application is again allowed, petitioner may request that it be applied towards the issue fee required by the new Notice of Allowance.[1]

Telephone inquiries should be directed to Irvin Dingle at (571) 272-3210.

This matter will be forwarded to Technology Center AU 2661 for processing of the request for continued examination under 37 CFR 1.114 and for consideration of the concurrently filed Information Disclosure Statement.

Irvin Dingle
Petitions Examiner
Office of Petitions
Office of the Deputy Commissioner
for Patent Examination Policy

[1] The request to apply the issue fee to the new Notice may be satisfied by completing and returning the new Issue Fee Transmittal Form PTOL-85(b), which includes the following language thereon: Commissioner for Patents is requested to apply the Issue Fee and Publication Fee (if any) or re-apply any previously paid issue fee to the application identified above. Petitioner is advised that, whether a fee is indicated as being due or not, the Issue Fee Transmittal Form must be completed and timely submitted to avoid abandonment. Note the language in bold text on the first page of the Notice of Allowance and Fee(s) Due (PTOL-85).

BEST AVAILABLE COPY

UNITED STATES PATENT AND TRADEMARK OFFICE

COMMISSIONER FOR PATENTS
UNITED STATES PATENT AND TRADEMARK OFFICE
P.O. BOX 1450
ALEXANDRIA, VA 22313-1450
www.uspto.gov

GENENCOR INTERNATIONAL, INC.
ATTENTION: LEGAL DEPARTMENT
925 PAGE MILL ROAD
PALO ALTO, CA 94304

COPY MAILED
APR 0 8 2004
OFFICE OF PETITIONS

In re Application of	:	
David A. Estell, et al.	:	
Application No. 09/768,080	:	ON PETITION
Filed: January 23, 2001	:	
Attorney Docket No. GC527C3	:	

This is a decision on the petition under 37 CFR 1.137(b), filed February 3, 2004, to revive the above-identified application.

The petition is **DISMISSED AS MOOT.**

A review of the file confirms that USPTO records indicate that the Amendment dated August 25, 2003 was timely filed. Accordingly, the present petition to revive is unnecessary and dismissed as moot. No fees have been charged to petitioner's deposit account.

The application file is being forwarded to Technology Center 1600, Art Unit 1644 for further processing.

Telephone inquiries concerning this decision should be directed to the undersigned at (703) 306-5594.

Retta Williams

Retta Williams
Petitions Examiner
Office of Petitions
Office of the Deputy Commissioner
for Patent Examination Policy

UNITED STATES PATENT AND TRADEMARK OFFICE

COMMISSIONER FOR PATENTS
UNITED STATES PATENT AND TRADEMARK OFFICE
P.O. BOX 1450
ALEXANDRIA, VA 22313-1450
WWW.USPTO.GOV

Paper No. 8

JOHN S. PRATT, ESQ
KILPATRICK STOCKTON, LLP
1100 PEACHTREE STREET
SUITE 2800
ATLANTA GA 30309

COPY MAILED

SEP 0 9 2003

OFFICE OF PETITIONS

In re Application of
Johnston, et al.
Application No. 09/768,115
Filed: January 23, 2001
Attorney Docket No. 38830/253270
For: MICROBIOLOGICAL WATER FILTER

DECISION GRANTING PETITION

This is a decision on the petition filed August 15, 2003 (certificate of mailing date August 13, 2003), to accord the above-identified application a filing date of January 23, 2001.

On January 23, 2001, the application was deposited.

On May 15, 2001, the Office of Initial Patent Examination mailed a Notice stating that drawings were missing and that a filing date would be accorded upon receipt of the missing items. Petitioner submitted one sheet of drawings on January 22, 2002 (certificate of mailing date November 15, 2001). Because January 22, 2002 was the first date that drawings were present in the Office, the Office accorded a filing date of January 22, 2002 to the application. It is noted that petitioner simply filed the sheet of drawings without alleging that a drawing had already been filed or had been incorporated by reference. On June 2, 2003 (certificate of mailing date May 28, 2003), petitioner filed a Request for Corrected Filing Date, enclosing a copy of the Express Mail label used in the initial filing and a date stamped postcard return receipt that lists January 23, 2001 as the date of receipt of the items on the postcard. OIPE mailed a response to the Request for Corrected Filing Receipt on June 16, 2003. The June 16, 2003 correspondence stated that the filing date accorded to the application is the date the application met the filing date requirements of 37 CFR 1.53(b) or (c) and informed petitioner that a petition under 37 CFR 1.10, 37 CFR 1.53, or 37 CFR 1.82 was required in order request a change in the filing date.

In response, the present petition alleges that even if the drawings were inadvertently omitted from the initial filing on January 23, 2001, the application was not incomplete because the Utility Patent Application Transmittal sheet, filed January 23, 2001, incorporated by reference the entire disclosure of the parent application no 09/382,278. The petition states that the drawings in the parent and continuation are identical.

The Office allows an applicant to rely upon an incorporation by reference of a parent application when a portion of the child application has been inadvertently omitted.

Based on the incorporation by reference, it appears that the drawings were present in the Office on January 23, 2001, albeit in the file of another application, i.e., application No. 09/382,278. Therefore, on petition, the application may be accorded the requested filing date of January 23, 2001.

In view of the above, the petition is **granted**. The copy of the drawings submitted on January 22, 2002 will be used for examination purposes.[1]

The petition fee of $130 will not be refunded since the petition was required to accord the application the requested filing date.

The Application is being returned to the Office of Initial Patent Examination for further processing with a filing date of January 23, 2001.

Telephone inquiries should be directed to the undersigned at (703) 308-6712.

E. Shirene Willis

E. Shirene Willis
Senior Petitions Attorney
Office of Petitions

[1] The Office assumes that the drawings are a true and exact copy of the drawings submitted in the parent application. If this is not the case, then petitioner must notify the Office. Of course, the primary examiner is expected to compare the instant drawings to the disclosure of the parent application in order to verify that the drawings are, in fact, parts of the disclosure of the prior application.

UNITED STATES PATENT AND TRADEMARK OFFICE

COMMISSIONER FOR PATENTS
UNITED STATES PATENT AND TRADEMARK OFFICE
P.O. BOX 1450
ALEXANDRIA, VA 22313-1450
WWW.USPTO.GOV

Paper No. 15

GUNNAR G. LEINBERG
NIXON PEABODY
CLINTON SQUARE
P.O. BOX 31051
ROCHESTER, NY 14603

COPY MAILED

SEP 02 2003

OFFICE OF PETITIONS

In re Application of	:	
Jeffrey Zarnowski et al	:	
Application No. 09/768,124	:	ON PETITION
Filed: January 23, 2001	:	
Attorney Docket No. 201951/141	:	

This is a decision on the petition under 37 CFR 1.137(b), filed August 20, 2003, to revive the above-identified application.

The petition is **GRANTED**.

The above-identified application became abandoned for failure to submit the issue fee/publication fee and formal drawings in a timely manner in reply to the Notice of Allowance and Notice of Allowability mailed February 25, 2003, which set a statutory period for reply of three (3) months. Accordingly, the above-identified application became abandoned on May 26, 2003.

It is not apparent whether the person signing the statement of unintentional delay was in a position to have firsthand or direct knowledge of the facts and circumstances of the delay at issue. Nevertheless, such statement is being treated as having been made as the result of a reasonable inquiry into the facts and circumstances of such delay. See 37 CFR 10.18(b) and Changes to Patent Practice and Procedure; Final Rule Notice, 62 Fed. Reg. 53131, 53178 (October 10, 1997), 1203 Off. Gaz. Pat. Office 63, 103 (October 21, 1997). In the event that such an inquiry has not been made, petitioner must make such an inquiry. If such inquiry results in the discovery that it is not correct that the entire delay in filing the required reply from the due date for the reply until the filing of a grantable petition pursuant to 37 CFR 1.137(b) was unintentional, petitioner must notify the Office.

There is no indication that the person signing the instant petition was ever given a power of attorney or authorization of agent to prosecute the above-identified

Best Available Copy

application. If the person signing the instant petition desires to receive future correspondence regarding this application, the appropriate power of attorney or authorization of agent must be submitted. While a courtesy copy of this decision is being mailed to the person signing the instant petition, all future correspondence will be directed to the address of currently of record until such time as appropriate instructions are received to the contrary.

Telephone inquiries concerning this decision should be directed to Wan Laymon at (703) 305-9282.

The application file is being forwarded to Publishing Division.

Wan Laymon

Wan Laymon
Petitions Examiner
Office of Petitions
Office of the Deputy Commissioner
for Patent Examination Policy

CC: BERNHARD P. MOLLDREM
2ND FLOOR, MONROE BUILDING
333 EAST ONONDAGA STREET
SYRACUSE, NY 13202

UNITED STATES PATENT AND TRADEMARK OFFICE

Commissioner for Patents
United States Patent and Trademark Office
Washington, D.C. 20231
www.uspto.gov

Paper No. 12

TED R. RITTMASTER
FOLEY & LARDNER
SUITE 3500
2029 CENTURY PARK EAST
LOS ANGELES, CA 90067-3021

COPY MAILED

AUG 2 7 2002

OFFICE OF PETITIONS

In re Application of
Ronald J. Lebel et al
Application No. 09/768,196
Filed: January 22, 2001
Attorney Docket No. 047711-0221

:DECISION GRANTING PETITION
:UNDER 37 CFR 1.137(f) AND
:NOTICE RESETTING PERIOD FOR
:REPLY TO NONFINAL OFFICE
:ACTION

This is a decision on the petition filed July 30, 2002, to revive the instant nonprovisional application under the unintentional provisions of 37 CFR 1.137(f).

The petition is **GRANTED**.

Petitioner states that the instant nonprovisional application is the subject of an application filed in a foreign country on July 20, 2001. However, the U.S. Patent and Trademark Office was unintentionally not notified of this filing within 45 days subsequent to the filing of the subject application in a foreign country.

In view of the above, this application became abandoned pursuant to 35 U.S.C. § 122(b)(2)(B)(iii) and 37 CFR 1.213(c) for failure to timely notify the Office of the filing of an application in a foreign country, or under a multilateral international agreement, that requires publication of applications 18 months after filing.

A petition under 37 CFR 1.137(f) must be accompanied by:

(1) the reply which is met by the notification of such filing in a foreign country or under a multinational treaty;

(2) the petition fee as set forth in 37 CFR 1.17(m); and

(3) a statement that the entire delay in filing the required reply from the due date of the reply until the filing of a grantable petition was unintentional.

The instant petition has been found in compliance with 37 CFR 1.137(f). However, while the statement of unintentional delay does not comply with the rule, the statement presented will be construed as meaning that "the entire delay in filing the required reply [Notice to Rescind Previous Nonpublication Request Under 35 U.S.C. § 122(b)(2)(B)(ii)] until the filing of a grantable petition was unintentional." Accordingly, the failure to timely notify the Office of a foreign or international filing within 45 days as provided by 35 U.S.C. 122(b)(2)(B)(iii) is accepted as having been unintentionally delayed.

The previous Request and Certification under 35 U.S.C. § 122(b)(2)(B)(i) has been rescinded. A Corrected Filing Receipt which sets forth the projected publication date of November 28, 2002 accompanies this decision on petition.

The power of attorney submitted by facsimile transmission on August 22, 2002 has been made of record in the above-identified application file.

There is no indication that a reply to the Non-Final Office action of July 9, 2002 has been filed. Accordingly, the period for reply to the Office action of July 9, 2002 is restarted with the mailing date of this decision. Extensions of time pursuant to the provisions of 37 CFR 1.136(a) are permitted. Failure to timely reply within the period restarted by this decision will result in the abandonment of this application.

Any inquiries concerning this decision may be directed to Karen Creasy at (703) 305-8859.

This application is being forwarded to Technology Center Art Unit 3763 to await a reply to the Non-Final Office action mailed July 9, 2002, the period of which is restarted to run from the mailing date of this decision on petition as noted above.

Frances Hicks

Frances Hicks
Lead Petitions Examiner
Office of Petitions
Office of the Deputy Commissioner
for Patent Examination Policy

ATTACHMENT: Corrected Filing Receipt

FAX TRANSMISSION

U.S. PATENT AND TRADEMARK OFFICE
Office of Petitions
Assistant Commissioner for Patents, Box DAC
Washington, DC 20231
(703) 305-8859
Fax: (703) 308-6916

To:	Ted R. Rittmaster	**Date:**	August 21, 2002
Fax #:	1-310-557-8475	**Pages:**	1, including this cover sheet.
From:	Karen Creasy		
Subject:	Application No. 09/768,196 Dkt. No. 047711-0221		

COMMENTS:

Thank you for your petition, filed July 30, 2002, requesting revival of the above-identified application under the provisions of 37 CFR 1.137(f).

The petition fails to state the date of the foreign filing, which is important in making a proper decision on the petition. Therefore, could you please do a short supplemental statement setting forth the date of the foreign filing.

In order to expedite processing of the petition, please transmit the statement by facsimile to the number indicated above and to my attention. Should you have any further questions concerning this matter, please feel free to contact me at the above telephone number.

Thank you for your patience in this matter.

UNITED STATES PATENT AND TRADEMARK OFFICE

Commissioner for Patents
United States Patent and Trademark Office
P.O. Box 1450
Alexandria, VA 22313-1450
www.uspto.gov

042005

JONES & VOLENTINE, L.L.P.
Suite 150
12200 Sunrise Valley Drive
Reston, VA 20191

MAY 02 2005

In re Application of:
Tsukasa Yajima
Serial No.: 09/768,271
Filed: January 25, 2001
For: SEMICONDUCTOR DEVICE HAVING PROTECTIVE LAYER ON FIELD OXIDE

DECISION ON PETITION

This is a decision on the petition filed April 14, 2005, to withdraw the holding of abandonment of the above-identified application.

The petition is GRANTED.

This application was held abandoned after the decision adverse to the applicant by the Board of Patent Appeals and Interferences (BPAI) rendered on February 15, 2005. A Notice of Abandonment was mailed on March 2, 2005.

Petitioner asserts that the Notice of Abandonment was improper and should be withdrawn since the two-month time period for seeking review of the decision of the BPAI or to commence a civil action did not expired until April 15, 2005. Also submitted along with the petition is a Request for Continued Examination (RCE) and a submission pursuant to 37 C.F.R. § 1.114.

The record reveals that the Notice of Abandonment was prematurely issued before the period for seeking court review or commencement of a civil action expired. Further, the RCE filed April 14, 2005 was timely. Accordingly, the application is not abandoned in fact.

In view of the above-stated reasons, the Notice of Abandonment is hereby vacated and the holding of abandonment withdrawn.

It is noted that the address listed on the petition is different from the correspondence address of record. However, since petitioner has been receiving recent communications from the Office at the address of record and since no change of address has been received, communications from the Office will continue to be sent to the address of record until otherwise notified by petitioner.

The RCE will be processed and an action will be issued in due course.

Any inquiry regarding this decision should be directed to Hien H. Phan, Special Program Examiner, at (571) 272-1606.

James Dwyer, Group Director
Technology Center 2800
Semiconductors, Electrical and Optical
Systems and Components

UNITED STATES PATENT AND TRADEMARK OFFICE

COMMISSIONER FOR PATENTS
UNITED STATES PATENT AND TRADEMARK OFFICE
P.O. BOX 1450
ALEXANDRIA, VA 22313-1450
www.uspto.gov

Mailed: JUL 2 2 2004

BC
Paper Number:

In re application of
Werner Temme et al.
Serial No. 09/768,274
Filed: January 25, 2001
For: USE OF AQUEOUS POLYURETHANE DISPERSIONS IN FORMULATIONS FOR SPORTS FLOOR COVERINGS

DECISION ON PETITION

This is a decision on the REQUEST FOR RESETTING OF TIME FOR RESPONSE, filed May 10, 2004. At the time of the filing of the present request, the present application was under Final rejection based on the Final Office action mailed on April 9, 2003. Applicant filed a response to the Final rejection under 37 CFR 1.116 on July 8, 2003. Upon not receiving a communication in reply to the response filed on July 8, 2003, the applicant filed a Notice of Appeal on October 9, 2003, along with a Petition of a Three-month extension of time. On May 10, 2004, after still not receiving a communication in reply to the response filed on July 8, 2003, the applicant filed a Request for Continued Examination, a Petition of a Five-month extension of time, and the present request for resetting of time for response. The Applicants request that the time for consideration in this application be reset based on the Patent Office's error of not entering the previous timely filed response into the file for consideration by the examiner. Additionally, if the time for consideration is reset, Applicants hereby request withdrawal of the Request for Continued Examination and Extension of Time, as well as the previously filed Notice of Appeal and Extension of Time, and a refund of all fees paid.

DECISION

A review of the requestor's evidence provided with the instant request indicates that the request does not have merit. Although the evidence submitted, confirms that applicants' did not receive a response to their After Final submission, this evidence does not warrant resetting the statutory period of response set forth in the Final Rejection.

The Final rejection of April 9, 2003 clearly stated that "A shortened statutory period for reply to this final action is set to expire THREE MONTHS from the mailing date of this action. In the event a first reply is filed within TWO MONTHS of the mailing date of this final action and the advisory action is not mailed until after the end of the THREE-MONTH shortened statutory period, then the shortened statutory period will expire on the date the advisory action is mailed, and any extension fee pursuant to 37 CFR 1 .136(a) will be calculated from the mailing date of the advisory action. In no event, however, will the statutory period for reply expire later than SIX MONTHS from the mailing date of this final action."

37 C.F.R. 1.116 (b) states:

> "§ 1.116 Amendments after final action or appeal.
> (b) After a final rejection or other final action (§ 1.113) in an application or in an ex parte reexamination filed under § 1.510, or an action closing prosecution (§ 1.949) in an inter partes reexamination filed under § 1.913, amendments may be made canceling claims or complying with any requirement of form expressly set forth in a previous Office action. Amendments presenting rejected claims in better form for consideration on appeal may be admitted. **The admission of, or refusal to admit, any amendment after a final rejection, a final action, an action closing**

prosecution, or any related proceedings will not operate to relieve the application or patent under reexamination from its condition as subject to appeal or to save the application from abandonment under § 1.135, or the reexamination from termination. No amendment can be made in an inter partes reexamination proceeding after the right of appeal notice under § 1.953 except as provided for in paragraph (d) of this section." (emphasis added)

37 CFR 1.113 states:

"§ 1.113 Final rejection or action.

(a) On the second or any subsequent examination or consideration by the examiner the rejection or other action may be made final, **whereupon applicants, or for ex parte reexaminations filed under § 1.510, patent owner's reply is limited to appeal in the case of rejection of any claim (§ 1.191), or to amendment as specified in § 1.114 or § 1.116.** Petition may be taken to the Commissioner in the case of objections or requirements not involved in the rejection of any claim (§ 1.181). **Reply to a final rejection or action must comply with § 1.114 or paragraph (c) of this section.** For final actions in an inter partes reexamination filed under § 1.913, see § 1.953.

(b) In making such final rejection, the examiner shall repeat or state all grounds of rejection then considered applicable to the claims in the application, clearly stating the reasons in support thereof.

(c) Reply to a final rejection or action must include cancellation of, or appeal from the rejection of, each rejected claim. If any claim stands allowed, the reply to a final rejection or action must comply with any requirements or objections as to form." (Emphasis added)

37 CFR 1.114 states:

"§ 1.114 Request for continued examination.

(a) If prosecution in an application is closed, an applicant may request continued examination of the application by filing a submission and the fee set forth in § 1.17(e) prior to the earliest of:

(1) Payment of the issue fee, unless a petition under § 1.313 is granted;

(2) Abandonment of the application; or

(3) The filing of a notice of appeal to the U.S. Court of Appeals for the Federal Circuit under 35 U.S.C. 141, or the commencement of a civil action under 35 U.S.C. 145 or 146, unless the appeal or civil action is terminated.

(b) Prosecution in an application is closed as used in this section means that the application is under appeal, or that the last Office action is a final action (§ 1.113), a notice of allowance (§ 1.311), or an action that otherwise closes prosecution in the application.

(c) A submission as used in this section includes, but is not limited to, an information disclosure statement, an amendment to the written description, claims, or drawings, new arguments, or new evidence in support of patentability. If reply to an Office action under 35 U.S.C. 132 is outstanding, the submission must meet the reply requirements of § 1.111.

(d) If an applicant timely files a submission and fee set forth in § 1.17(e), the Office will withdraw the finality of any Office action and the submission will be entered and considered. If an applicant files a request for continued examination under this section after appeal, but prior to a decision on the appeal, it will be treated as a request to withdraw the appeal and to reopen prosecution of the application before the examiner. An appeal brief under § 1.192 or a reply brief under § 1.193(b), or related papers, will not be considered a submission under this section.

(e) The provisions of this section do not apply to:

(1) A provisional application;

(2) An application for a utility or plant patent filed under 35 U.S.C. 111(a) before June 8, 1995;

(3) An international application filed under 35 U.S.C. 363 before June 8, 1995;

(4) An application for a design patent; or

(5) A patent under reexamination.

[Added 65 FR 14865, Mar. 20, 2000, effective May 29, 2000; revised 65 FR 50092, Aug. 16, 2000]"

Whether or not applicants' received a reply to the July 8, 2003 response, which was filed three months from the Final rejection mailing, from the USPTO, given the finality of the rejection in the instant application, the only courses of action available to the applicant as the end of the 6-month statutory period approached, given the above rules, would have been:

(1) To file an amendment, and ensure that it was matched with the file and considered by the Examiner, with the proper extension of time fee, under 37 C.F.R. 1.116, which placed the application in condition for allowance, see MPEP 706.07(f);
(2) File a notice of appeal with the proper extension of time fee, see MPEP 1205;
(3) File a continuing application under 37 C.F.R. 1.53(b) or (d), see MPEP 201.06(c) and (d),
(4) File a request for continued examination under 37 C.F.R. 1.114, or;
(5) Abandon the application.

While the Office attempts to promptly match with the application file and respond to an amendment after final, there are those instances where delays do occur, as in the instant application. However, it is clear from 37 C.F.R. 1.116 that abandonment of an application is risked when an amendment after a final Office action is proffered by the applicant. The rule clearly indicates that the mere filing of an amendment does not relieve the applicant of the duty of taking appropriate action to save the application from abandonment. Therefore, whether the requestor's reply was received and matched with the instant application file or not prior to the expiration of the six-month statutory period, the only right the requestor was entitled to was that of appealing the final rejection or by filing a continuing application or request for continued examination.

Thus, the requestor's filing of a Notice of Appeal and a Request for Continued Examination, along with the appropriate petitions for extension of time, was the diligence required to avoid abandonment of the application after a Final rejection is issued.

The request for resetting of time for response is **DENIED**.

The additional request for refund of fees is moot in view of the above denial. Moreover, the request for refund does not meet the requirements of 37 CFR 1.26 or MPEP 607.02.

This application is currently awaiting action by the examiner after the filing of an amendment on June 21, 2004. An Office action will be mailed in due course.

JMStone

Jacqueline M. Stone, Director
Technology Center 1700
Chemical and Materials Engineering

Gary M. Nath
Nath & Associates PLLC
1030 Fifteenth Street, N.W.
Sixth Floor
Washington, DC 20005

UNITED STATES PATENT AND TRADEMARK OFFICE

COMMISSIONER FOR PATENTS
UNITED STATES PATENT AND TRADEMARK OFFICE
P.O. BOX 1450
ALEXANDRIA, VA 22313-1450
www.uspto.gov

MAIL

Paper No. 10

NOV 1 0 2004

DIRECTOR OFFICE
TECHNOLOGY CENTER 2600

NIXON PEABODY, LLP
401 9TH STREET, NW
SUITE 900
WASHINGTON DC 20004-2128

In re Application of
David Ross, et al.
Application No. 09/768,316
Filed: January 25, 2001
For: **VIDEO PRODUCTION SWITCHER WITH INTEGRATED ASPECT RATIO CONVERTER**

DECISION ON PETITION
TO WITHDRAW HOLDING OF
ABANDONMENT

This is a decision on the petition filed December 4, 2003 and resubmitted on July 19, 2004, which is treated as Petition to Withdraw the Holding of Abandonment pursuant to 37 C.F.R. §1.181. No fee is required.

The petition is **GRANTED.**

The application was abandoned for failure to respond in a timely and effective manner to the non-final Office action mailed April 28, 2003. A Notice of Abandonment was mailed on November 20, 2003.

Petitioner asserts that a proper response was timely filed on July 22, 2003. In support of the petition, Petitioner has submitted, a copy of Applicant's reply and a date-stamped post card receipt which itemized a transmittal letter and an amendment. A copy of the amendment and transmittal letter accompanied the July 19, 20004 petition.

The original correspondence filed was not matched with the application file and cannot be located. However, M.P.E.P. § 503 states, "[a] post card receipt which itemizes and properly identifies the papers which are being filed serves as *prima facie* evidence of receipt in the U.S.PTO of all the items listed thereon on the date stamped thereon by the PTO." Accordingly, it is concluded that the response was timely filed in the Patent and Trademark Office but not matched with the application file.

In view of the above stated reasons, the Notice of Abandonment is hereby vacated and the holding of abandonment withdrawn.

The application file will be forwarded to the Technology Center's technical support staff for entering the copy of the response submitted with the petition. From there, the file will be forwarded to the examiner for further examination in due course.

Dwayne Bost
Special Program Examiner
Technology Center 2600
Communications

SPE RESPONSE FOR CERTIFICATE OF CORRECTION 09/768327

Paper No.: _____

DATE : 2-17-06

TO SPE OF : ART UNIT 2635

SUBJECT : Request for Certificate of Correction on Patent No.: 6690264

A response is requested with respect to the accompanying request for a certificate of correction.

Please complete this form and return with file, within **7** days to:

Palm location **7580, Certificates of Correction Branch – South Tower – 9A22**

If response is for an IFW, **return to employee (named below) via PUBSCofC Team in MADRAS.**

With respect to the change(s) requested, correcting Office and/or Applicant's errors, should the patent read as shown in the certificate of correction (COCIN)? No new matter should be introduced, nor should the scope or meaning of the claims be changed.

Check figs / spec.

Thank You For Your Assistance

Certificates of Correction Branch

The request for issuing the above-identified correction(s) is hereby:

Note your decision on the appropriate box.

☒ **Approved**	**All** changes apply.
☐ **Approved in Part**	Specify below which changes **do not** apply.
☐ **Denied**	State the reasons for denial below.

Comments:

SPE

2635

Art Unit

UNITED STATES PATENT AND TRADEMARK OFFICE

Commissioner for Patents
United States Patent and Trademark Office
P.O. Box 1450
Alexandria, VA 22313-1450
www.uspto.gov

BOURQUE & ASSOCIATES, P.A.
Suite 303
835 Hanover Street
Manchester, NH 03104

COPY MAILED

JAN 3 1 2005

OFFICE OF PETITIONS

In re Application of	:	
Don Tran, et. al.	:	
Application No. 09/768,385	:	ON PETITION
Filed: January 24, 2001	:	
Attorney Docket No. ACUITY-023XX	:	

This is a decision on the petition under 37 CFR 1.137(b), filed October 25, 2004, to revive the above-identified application.

The above-identified application became abandoned for failure to submit the issue fee, publication fee, and drawings in a timely manner in reply to the Notice of Allowance mailed July 13, 2004, which set a statutory period for reply of three (3) months. Accordingly, the above-identified application became abandoned after midnight October 13, 2004.

In response, petitioner submitted with the instant petition $685 for the petition tor revive fee, $300 for the publication fee, $6 for two (2) advance soft copies, seven (7) sheets of formal drawings containing Figures 1-10, and $665 for the issue fee. However, effective October 1, 2004, the issue fee was increased from $665 to $685. Therefore, the fee deficiency of $20 has been charged to petitioner's deposit account.

The petition is **GRANTED**.

The application file is being referred to the Office of Publications for review of the Formal drawings filed October 25, 2004.

Telephone inquiries concerning this decision should be directed to the undersigned at (571) 272-3226.

Andrea Smith
Petitions Examiner
Office of Petitions
Office of the Deputy Commissioner
for Patent Examination Policy

UNITED STATES PATENT AND TRADEMARK OFFICE

COMMISSIONER FOR PATENTS
UNITED STATES PATENT AND TRADEMARK OFFICE
WASHINGTON, D.C. 20231
www.uspto.gov

Paper No. 7

LERNER AND GREENBERG, P.A.
Post Office Box 2480
Hollywood, FL 33022-2480

COPY MAILED

APR 18 2002

OFFICE OF PETITIONS

In re Application of
Franz Haas, et al.
Application No. 09/768,394
Filed: January 24, 2001
Attorney Docket No. WEB-19967

ON PETITION

This is a decision on the petition under 37 CFR 1.137(b), filed January 18, 2002, with a certificate of mailing dated December 3, 2001, to revive the above-identified application.

The petition is **GRANTED**.

The above-identified application became abandoned for failure to reply in a timely manner to the Notice to File Corrected Application Papers mailed March 8, 2001. The Notice set a period for reply of two (2) months from the mail date of the Notice. No extensions of time under the provisions of 37 CFR 1.136(a) were obtained. Accordingly, the above-identified application became abandoned on May 9, 2001.

Telephone inquiries concerning this decision should be directed to Cheryl Gibson-Baylor at (703)308-5111, or in her absence, Sherry Brinkley at (703)305-9220.

The application file is being forwarded to Office of Initial Patent Examination for further processing.

Cheryl Gibson-Baylor
Petitions Examiner
Office of Petitions
Office of the Deputy Commissioner
for Patent Examination Policy

Sherry Brinkley
Petitions Examiner

Under the Paperwork Reduction Act of 1995, no persons are required to respond to a collection of information unless it displays valid OMB control number.

PETITION TO ACCEPT UNINTENTIONALLY DELAYED PAYMENT OF MAINTENANCE FEE IN AN EXPIRED PATENT (37 CFR 1.378(c))

Patent Number	Issue Date (YYYY-MM-DD)	Application Number	Filing Date (YYYY-MM-DD)	Docket Number (if applicable)
6554829	2003-04-29	09768410	2001-01-24	

CAUTION: Maintenance fee (and surcharge, if any) payment must correctly identify: (1) the patent number and (2) the application number of the actual U.S. application leading to issuance of that patent to ensure the fee(s) is/are associated with the correct patent. 37 CFR 1.366(c) and (d).

SMALL ENTITY
☐ Patentee claims, or has previously claimed, small entity status. See 37 CFR 1.27.

LOSS OF ENTITLEMENT TO SMALL ENTITY STATUS
☐ Patentee is no longer entitled to small entity status. See 37 CFR 1.27(g)

NOT Small Entity		Small Entity	
Fee	Code	Fee	Code
◉ 3 ½ year	(1551)	○ 3 ½ year	(2551)
○ 7 ½ year	(1552)	○ 7 ½ year	(2552)
○ 11 ½ year	(1553)	○ 11 ½ year	(2553)

SURCHARGE
The surcharge required by 37 CFR 1.20(i)(2) (Fee Code 1558) must be paid as a condition of accepting unintentionally delayed payment of the maintenance fee.

MAINTENANCE FEE (37 CFR 1.20(e)-(g))
The appropriate maintenance fee must be submitted with this petition.

STATEMENT
THE UNDERSIGNED CERTIFIES THAT THE DELAY IN PAYMENT OF THE MAINTENANCE FEE TO THIS PATENT WAS UNINTENTIONAL

PETITIONER(S) REQUEST THAT THE DELAYED PAYMENT OF THE MAINTENANCE FEE BE ACCEPTED AND THE PATENT REINSTATED

THIS PORTION MUST BE COMPLETED BY THE SIGNATORY OR SIGNATORIES

37 CFR 1.378(d) states: "Any petition under this section must be signed by an attorney or agent registered to practice before the Patent and Trademark Office, or by the patentee, the assignee, or other party in interest."

I certify, in accordance with 37 CFR 1.4(d)(4) that I am

◉ An attorney or agent registered to practice before the Patent and Trademark Office

○ A sole patentee

○ A joint patentee; I certify that I am authorized to sign this submission on behalf of all the other patentees.

○ A joint patentee; all of whom are signing this e-petition

○ The assignee of record of the entire interest

Patent Practitioner			
A signature of the applicant or representative is required in accordance with 37 CFR 1.33 and 10.18. Please see 37 CFR 1.4(d) for the form of the signature			
Signature	/J. Gary Mohr/	Date (YYYY-MM-DD)	2008-10-17
Name	J. Gary Mohr	Registration Number	27575

This collection of information is required by 37 CFR 1.378(c). The information is required to obtain or retain a benefit by the public which is to file (and by the USPTO to process) an application. Confidentiality is governed by 35 U.S.C. 122 and 37 CFR 1.11 and 1.14. This collection is estimated to take 1 hour to complete, including gathering, preparing, and submitting the completed application form to the USPTO. Time will vary depending upon the individual case. Any comments on the amount of time you require to complete this form and/ or suggestions for reducing this burden, should be sent to the Chief Information Officer, U.S. Patent and Trademark Office, U.S. Department of Commerce, P.O. Box 1450, Alexandria, VA 22313-1450. DO NOT SEND FEES OR COMPLETED FORMS TO THIS ADDRESS. **This form can only be used when in conjunction with EFS-Web. If this form is mailed to the USPTO, it may cause delays in reinstating the patent.**

Privacy Act Statement

The Privacy Act of 1974 (P.L. 93-579) requires that you be given certain information in connection with your submission of the attached form related to a patent application or patent. Accordingly, pursuant to the requirements of the Act, please be advised that: (1) the general authority for the collection of this information is 35 U.S.C. 2(b)(2); (2) furnishing of the information solicited is voluntary; and (3) the principal purpose for which the information is used by the U.S. Patent and Trademark Office is to process and/or examine your submission related to a patent application or patent. If you do not furnish the requested information, the U.S. Patent and Trademark Office may not be able to process and/or examine your submission, which may result in termination of proceedings or abandonment of the application or expiration of the patent.

The information provided by you in this form will be subject to the following routine uses:

1. The information on this form will be treated confidentially to the extent allowed under the Freedom of Information Act (5 U.S.C. 552) and the Privacy Act (5 U.S.C. 552a). Records from this system of records may be disclosed to the Department of Justice to determine whether the Freedom of Information Act requires disclosure of these record s.

2. A record from this system of records may be disclosed, as a routine use, in the course of presenting evidence to a court, magistrate, or administrative tribunal, including disclosures to opposing counsel in the course of settlement negotiations.

3. A record in this system of records may be disclosed, as a routine use, to a Member of Congress submitting a request involving an individual, to whom the record pertains, when the individual has requested assistance from the Member with respect to the subject matter of the record.

4. A record in this system of records may be disclosed, as a routine use, to a contractor of the Agency having need for the information in order to perform a contract. Recipients of information shall be required to comply with the requirements of the Privacy Act of 1974, as amended, pursuant to 5 U.S.C. 552a(m).

5. A record related to an International Application filed under the Patent Cooperation Treaty in this system of records may be disclosed, as a routine use, to the International Bureau of the World Intellectual Property Organization, pursuant to the Patent Cooperation Treaty.

6. A record in this system of records may be disclosed, as a routine use, to another federal agency for purposes of National Security review (35 U.S.C. 181) and for review pursuant to the Atomic Energy Act (42 U.S.C. 218(c)).

7. A record from this system of records may be disclosed, as a routine use, to the Administrator, General Services, or his/her designee, during an inspection of records conducted by GSA as part of that agency's responsibility to recommend improvements in records management practices and programs, under authority of 44 U.S.C. 2904 and 2906. Such disclosure shall be made in accordance with the GSA regulations governing inspection of records for this purpose, and any other relevant (i.e., GSA or Commerce) directive. Such disclosure shall not be used to make determinations about individuals.

8. A record from this system of records may be disclosed, as a routine use, to the public after either publication of the application pursuant to 35 U.S.C. 122(b) or issuance of a patent pursuant to 35 U.S.C. 151. Further, a record may be disclosed, subject to the limitations of 37 CFR 1.14, as a routine use, to the public if the record was filed in an application which became abandoned or in which the proceedings were terminated and which application is referenced by either a published application, an application open to public inspections or an issued patent.

9. A record from this system of records may be disclosed, as a routine use, to a Federal, State, or local law enforcement agency, if the USPTO becomes aware of a violation or potential violation of law or regulation.

UNITED STATES PATENT AND TRADEMARK OFFICE

Commissioner for Patents
United States Patent and Trademark Office
P.O. Box 1450
Alexandria, VA 22313-1450
www.uspto.gov

In re Patent No. 6554829
Issue Date: April 29,2003
Application No. 09768410
Filed: January 24,2001
Attorney Docket No. ETH-1449

:

:DECISION GRANTING PETITION
:UNDER 37 CFR 1.378(c)

:

This is a decision on the electronic petition, filed October 17,2008 ,under 37 CFR 1.378(c) to accept the unintentionally delayed payment of the 3.5 year maintenance fee for the above-identified patent.

The petition is **GRANTED**.

The maintenance fee is accepted, and the above-identified patent reinstated as of October 17,2008 .
This decision also constitutes notice that the fee has been accepted. An electronic copy of the petition and this decision has been created as an entry in the Image File Wrapper. Nevertheless, petitioner should print and retain an independent copy.

Telephone inquiries related to this electronic decision should be directed to the Electronic Business Center at 1-866-217-9197.

UNITED STATES PATENT AND TRADEMARK OFFICE

Commissioner for Patents
United States Patent and Trademark Office
P.O. Box 1450
Alexandria, VA 22313-1450
www.uspto.gov

MEMORANDUM - CERTIFICATE OF CORRECTION

DATE: 11/23/05
TO: Certificate of Corrections Branch
FROM: Yogendra N. Gupta
SPE, Art Unit 1751
SUBJECT: REQUEST FOR CERTIFICATE OF CORRECTION

Please Issue a Certificate of Correction in U. S. Letters Patent No. 6,475,971 B2 as specified on the attached Certificate.

Yogendra N. Gupta
S.P.E., Art Unit 1751

UNITED STATES PATENT AND TRADEMARK OFFICE

CERTIFICATE

Patent No. 6,475,971 B2
Patented: November 5, 2002

On petition requesting issuance of a certificate for correction of inventorship pursuant to 35 U.S.C. 256, it has been found that the above identified patent, through error and without deceptive intent, improperly sets forth the inventorship. Accordingly, it is hereby certified that the correct inventorship of this patent is:

Hang Thanh Pham, Erie County, NY (US)
Rajiv Ratna Singh, Erie County, NY (US)
Hsueh Sung Tung, Erie County, NY (US)
Daniel Christopher Merkel, West Seneca, NY (US)

Yogendra N. Gupta
Supervisory Patent Examiner,
Art Unit 1751

SPE RESPONSE FOR CERTIFICATE OF CORRECTION

DATE 3/24/09

Paper No.: 23

TO SPE OF : ART UNIT 1796

SUBJECT : Request for Certificate of Correction for Appl. No.: 9/768423 Patent No.: 6562863B2

Please respond to this request for a certificate of correction within 7 days.

FOR IFW FILES:

Please review the requested changes/corrections as shown in the **COCIN** document(s) in the IFW application image. No new matter should be introduced, nor should the scope or meaning of the claims be changed.

Please complete the response (see below) and forward the completed response to scanning using document code **COCX**.

FOR PAPER FILES:

Please review the requested changes/corrections as shown in the attached certificate of correction. Please complete this form (see below) and forward it with the file to:

Certificates of Correction Branch (CofC)
South Tower - 9A22
Palm Location 7580

Virginia Tolbert
Certificates of Correction Branch
703-308-9390 ext. 113

Thank You For Your Assistance

The request for issuing the above-identified correction(s) is hereby:
Note your decision on the appropriate box.

- ☐ **Approved** — All changes apply.
- ☐ **Approved in Part** — Specify below which changes **do not** apply.
- ☒ **Denied** — State the reasons for denial below.

Comments: There are two separate recitations in claim 13 of "pressure". It is not clear which one or whether both are being amended.

MAW 3/31/9

SPE

1796
Art Unit

UNITED STATES PATENT AND TRADEMARK OFFICE

Commissioner for Patents
United States Patent and Trademark Office
P.O. Box 1450
Alexandria, VA 22313-1450
www.uspto.gov

May 28, 2009

Margaret B. Kelley
Gibbons, Del Deo, Dolan, Griffinger & Vecchione
One Riverfront Plaza
Newark, NJ 07102-5496

Patent No: 6,562,863 B2
Application No.: 09/768473
Applicant: Leo J. Romanczyk, Jr., et al.
Issued: May 13, 2003
Title: **PARTIALLY PURIFIED COCOA EXTRACTS CONTAINING COCOA POLYPHENOLS**

Request for Certificate of Correction:

Consideration had been given to your request for the issuance of a certificate of correction for the above-identified patent under the provisions of Rule 1.322.

The error complained of in claim 13 cannot be corrected since: Per Examiner "There are two separate recitations in claim 13 of "pressure". It is not clear which one or whether both are being amended

In view of the foregoing, your request in this matter is hereby **denied.**

Correspondence concerning this matter should be filed and directed to Decisions and Certificate of Correction Branch.

Virginia Tolbert
For Mary Diggs, Supervisor
Decisions and Certificate of Correction
(703) 756-1591

vt

UNITED STATES PATENT AND TRADEMARK OFFICE

Commissioner for Patents
United States Patent and Trademark Office
P.O. Box 1450
Alexandria, VA 22313-1450
www.uspto.gov

John R. Thompson, Esq.
STOEL RIVES L.L.P.
Suite 1100
201 South Main Street
Salt Lake City UT 84111

COPY MAILED

NOV 20 2006

OFFICE OF PETITIONS

In re Application of	:	
Wiggins et al.	:	
Application No. 09/768,482	:	DECISION ON PETITION
Filed: January 23, 2001	:	
Attorney Docket No. 47578.0100	:	

This is a decision on the petition under 37 CFR §1.137(b), filed August 14, 2006.

This above-identified application became abandoned for failure to timely file a response to a final Office Action which was mailed on December 2 2005. The final Office Action set a three (3) month shortened statutory period for reply. A one month extension of time was obtained under the provisions of 37 CFR §1.136(a). An amendment was submitted on March 20, 2006. In response to the amendment an Advisory Action was mailed on July 5, 2006 indicating the amendment submitted on March 20, 2006 did not place the application in condition for allowance. Accordingly, this application became abandoned on April 3, 2006. This petition decision precedes the mailing of a Notice of Abandonment.

The requirements for a grantable petition under 37 CFR §1.137(b) have been met. This petition is hereby **Granted**.

The Request for Continued Examination (RCE) and the amendment submitted with the instant petition will be forwarded to Technology Center 2100 for further processing.

Telephone inquiries concerning this matter should be directed to the undersigned at (571) 272-3215.

Charlema R. Grant

Charlema R. Grant
Petitions Attorney
Office of Petitions

UNITED STATES PATENT AND TRADEMARK OFFICE

Commissioner for Patents
United States Patent and Trademark Office
P.O. Box 1450
Alexandria, VA 22313-1450
www.uspto.gov

ADVANTEDGE LAW GROUP, LLC
922 W. BAXTER DR.
SUITE 100
SOUTH JORDAN UT 84095

MAILED

JUN 2 4 2010

OFFICE OF PETITIONS

In re Application :
Greg Wiggins et al. :
Application No. 09/768,482 : DECISION ON APPLICATION
Filed: January 23, 2001 : FOR PATENT TERM ADJUSTMENT
Attorney Docket No. **4001-0125** :

This is in response to the REQUEST FOR RECONSIDERATION OF PATENT TERM DETERMINATION filed February 15, 2010. Applicant requests that the determination of patent term adjustment be corrected from 190 to 2398 days.

As the instant application for patent term adjustment requests reconsideration of the patent term adjustment as it relates to the Office's failure to issue the patent within three years of the filing date, the application for patent term adjustment under 37 CFR 1.705(b) is **DISMISSED as PREMATURE**.

Knowledge of the actual date the patent issues is required to calculate the amount, if any, of additional patent term patentees are entitled to for Office failure to issue the patent within three years. See 37 CFR 1.702(b). (This is true even where a request for continued examination (RCE) was filed). The computer will not undertake the § 1.702(b) calculation until the actual date of issuance of the patent has been determined. Likewise, the computer will not calculate any further Office delay under 37 CFR 1.702(a)(4) or applicant delay under 37 CFR 1.704(c)(10) until the actual date of issuance of the patent has been determined. As such, the Office cannot make a determination on the patent term adjustment relating to those provisions until the patent has issued.

Requesting reconsideration of the patent term adjustment to be indicated on the patent under 37 CFR 1.705(b) based on the initial determination of patent term adjustment and a projected issuance date of the patent (or even the filing date of the request for continued examination) is premature. Accordingly, it is appropriate to dismiss such a request as premature.

Rather than file an application for patent term adjustment under 37 CFR 1.705(b) contesting the 37 CFR 1.702(b) calculation at the time of the mailing of the notice of

allowance, applicants are advised that they may wait until the time of the issuance of the patent and file a request for reconsideration of the patent term adjustment pursuant to 37 CFR 1.705(d). As the USPTO does not calculate the amount of time earned pursuant to 37 CFR 1.702(b) until the time of the issuance of the patent, the Office will consider any request for reconsideration of the patent term adjustment due to an error in the calculation of 37 CFR 1.702(b) to be timely if the request for reconsideration is filed within two months of the issuance of the patent. However, as to all other bases for contesting the initial determination of patent term adjustment received with the notice of allowance, applicants must timely file an application for patent term adjustment prior to the payment of the issue fee.[1]

Any request for reconsideration of the patent term adjustment indicated on the patent must be timely filed within two months after issuance pursuant to 37 CFR 1.705(d) and must include payment of the required fee under 37 CFR 1.18(e).

The Office of Data Management has been advised of this decision. This application is being referred to the Office of Data Management for issuance of the patent.

Telephone inquiries specific to this decision should be directed to Senior Petitions Attorney Patricia Faison-Ball at (571) 272-3212.

Anthony Knight
Director
Office of Petitions

[1] For example, if applicants dispute both the calculation of patent term adjustment under 37 CFR 1.702(a)(1) for Office failure to mail a first Office action or notice of allowance not later than fourteen months after the date on which the application was filed, and under 37 CFR 1.702(b) for Office failure to issue a patent within three years of the actual filing date of the application, then applicants must still timely file an application for patent term adjustment prior to the payment of the issue fee to contest the calculation of Office delay in issuing a first Office action or notice of allowance. See 37 CFR 1.705(b) and 35 U.S.C. 154(b)(3)(B). A dispute as to the calculation of the § 1.702(a)(1) period raised on request for reconsideration of patent term adjustment under 37 CFR 1.705(d) will be dismissed as untimely filed.

UNITED STATES PATENT AND TRADEMARK OFFICE

COMMISSIONER FOR PATENTS
UNITED STATES PATENT AND TRADEMARK OFFICE
P.O. BOX 1450
ALEXANDRIA, VA 22313-1450
www.uspto.go

Paper No. 8

Daniel R. McClure
THOMAS, KAYDEN, HORSTEMEYER & RISLEY, L.L.P.
Suite 1750
100 Galleria Parkway N.W.
Atlanta GA 30339

MAIL

FEB 06 2004

DIRECTOR OFFICE
TECHNOLOGY CENTER 2600

In re application of:	:	
Yu-Wen HWANG	:	
Application No. 09/768,483	:	DECISION ON REQUEST TO
Filed: January 23, 2001	:	WITHDRAW FROM RECORD
For: STRUCTURE OF A BIODIRECTIONAL WAVELENGTH OPTICAL FUNCTION MODULE	:	

This is a decision on the request to withdraw as attorney/agent of record filed on December 8, 2003.

A grantable request to withdraw as attorney/agent of record must:
(1) indicate the present mailing address of the attorney(s)/agent(s) who seek(s) to withdraw, and
(2) be signed by each attorney/agent seeking to withdraw or clearly be signed on their behalf, and
(3) be *approved* at least thirty (30) days prior to the maximum extendable period for response to any outstanding Office Action, and
(4) indicate the address to which future correspondence should be mailed.

Petitioner has not met item (4) above. Accordingly, the request is **DENIED**.

All attorneys of record remain of record.

Future communications from the Office will be directed to the address listed above.

Kenneth A. Wieder
Special Program Examiner
Technology Center 2600
Communications

UNITED STATES PATENT AND TRADEMARK OFFICE

COMMISSIONER FOR PATENTS
UNITED STATES PATENT AND TRADEMARK OFFICE
P.O. BOX 1450
ALEXANDRIA, VA 22313-1450
www.uspto.go

Paper No. 12

Daniel R. McClure
THOMAS, KAYDEN, HORSTEMEYER & RISLEY, L.L.P.
Suite 1750
100 Galleria Parkway N.W.
Atlanta GA 30339

MAIL

APR 01 2004

DIRECTOR OFFICE
TECHNOLOGY CENTER 2600

In re application of:	:	
Yu-Wen HWANG	:	
Application No. 09/768,483	:	DECISION ON REQUEST TO
Filed: January 23, 2001	:	WITHDRAW FROM RECORD
For: STRUCTURE OF A BIODIRECTIONAL WAVELENGTH OPTICAL FUNCTION MODULE	:	

This is a decision on the request for reconsideration on the decision denying the request to withdraw as attorney/agent of record filed on February 19, 2004.

A grantable request to withdraw as attorney/agent of record must:
(1) indicate the present mailing address of the attorney(s)/agent(s) who seek(s) to withdraw, and
(2) be signed by each attorney/agent seeking to withdraw or clearly be signed on their behalf, and
(3) be *approved* at least thirty (30) days prior to the maximum extendable period for response to any outstanding Office Action, and
(4) indicate the address to which future correspondence should be mailed.

Petitioner has now met items above. Accordingly, the request is **GRANTED**.

Future communications from the Office will be directed to the address listed below until such a time as a change of address is provided. This address has been provided by the withdrawing attorney(s).

Kenneth A. Wieder
Special Program Examiner
Technology Center 2600
Communications

Cc: Mr. Jaiwei Huang
JC Patents
4 Venture, Suite 250
Irvine, CA 92618

UNITED STATES PATENT AND TRADEMARK OFFICE

COMMISSIONER FOR PATENT
UNITED STATES PATENT AND TRADEMARK OFFIC
WASHINGTON, D.C. 20231
www.uspto.go

Paper No. 13

W. DANIEL SWAYZE, JR.
TEXAS INSTRUMENTS INCORPORATED
M/S 3999
PO BOX 655474
DALLAS, TX 75265

COPY MAILED

JAN 2 3 2003

OFFICE OF PETITIONS

In re Application of	:	
Robert A. Priegnitz et al	:	
Application No. 09/768,504	:	ON PETITION
Filed: January 25, 2001	:	
Attorney Docket No. P00,1841 01	:	

This is a decision on the petition under 37 CFR 1.137(b), filed December 16, 2002, to revive the above-identified application.

The petition is **GRANTED**.

The above-identified application became abandoned for failure to reply within the meaning of 37 CFR 1.113 in a timely manner to the final Office action mailed May 15, 2002, which set a shortened statutory period for reply of three (3) months. One month extension of time under the provisions of 37 CFR 1.136(a) was obtained. Accordingly, the above-identified application became abandoned on September 16, 2002.

An extension of time under 37 CFR 1.136 must be filed prior to the expiration of the maximum extendable period for reply. See In re Application of S., 8 USPQ2d 1630, 1631 (Comm'r Pats. 1988). Accordingly, since the $810 extension of time submitted with the petition on December 16, 2002 was subsequent to the maximum extendable period for reply, petitioner may request a refund of this fee by writing to the Office of Finance, Refund Section. A copy of this decision should accompany petitioner's request.

The file does not indicate a change of address has been submitted, although the address given on the petition differs from the address of record. If appropriate, a change of address should be filed in accordance with MPEP 601.03. A courtesy copy of this decision is being mailed to the address given on the petition; however, the Office will mail all future correspondence solely to the address of record.

Telephone inquiries concerning this decision should be directed to Irvin Dingle at (703) 306-5684.

The application file is being forwarded to Technology Center 2800 for further processing.

Irvin Dingle
Petitions Examiner
Office of Petitions
Office of the Deputy Commissioner
for Patent Examination Policy

cc:

Melvin A. Robinson
Schiff Hardin & Waite
Patent Department
6600 Sears Tower
Chicago, IL 60606

UNITED STATES PATENT AND TRADEMARK OFFICE

Commissioner for Patents
United States Patent and Trademark Office
P.O. Box 1450
Alexandria, VA 22313-1450
www.uspto.gov

Paper No. 20

W DANIEL SWAYZE JR
TEXAS INSTRUMENTS INC
PO BOX 655474 MX 3999
DALLAS TX 75265

COPY MAILED
SEP 0 2 2004
OFFICE OF PETITIONS

In re Application of	:	
Priegnitz, et al.	:	
Application No. 09/768,504	:	ON PETITION
Filed: January 25, 2001	:	
Attorney Docket No. TI-31455	:	

This is a decision on the "PETITION TO REVIVE PATENT APPLICATION UNINTENTIONALLY ABANDONED UNDER 37 CFR 1.137(b)", filed May 25, 2004, which is also being treated as a petition to withdraw the holding of abandonment under 37 CFR 1.181 due to petitioner's statement that no fee should be charged.

The petition under 37 CFR 1.181 is **DISMISSED**.

The petition under 37 CFR 1.137(b) is **DISMISSED**.

Petition Under 37 CFR 1.181:

The above-identified application became abandoned for failure to file a proper reply to the final Office action mailed August 12, 2003. No extensions of time under 37 CFR 1.136(a) were obtained. Accordingly, the above-identified application became abandoned on November 13, 2003. A Notice of Abandonment was mailed on May 18, 2004.

Petitioner states that the abandonment was not the fault of the Applicant, and that the application became abandoned because an

Appeal Brief was allegedly not received the by Patent and Trademark Office. In support thereof, Petitioner has included a copy of postcard receipt, itemizing an Appeal Brief, 2 month extension of time, and a Request for an Oral Hearing.

First, it is noted that the postcard receipt does not contain a USPTO date stamp. Accordingly, it can not be used to establish that those items listed thereon were received in the Patent and Trademark Office.

However, even if the postcard receipt did contain a proper USPTO date stamp, the application did not become abandoned for failure to file an Appeal Brief. No Notice of Appeal was ever filed. Applicant must file a Notice of Appeal (with fee) before (or concurrent with) the filing of an Appeal Brief. It is true that with the Appeal Brief, Applicant included an authorization to charge any additional fees to his deposit account, and that accordingly, the fee for the filing of a Notice of Appeal arguably could have been charged. However, the last day the Notice of Appeal could have been filed (with the maximum 3 month extension of time) would have been February 12, 2004 (as the final Office action was mailed August 12, 2003). Applicant does not claim to have mailed the Appeal Brief until March 1, 2004.

Petition Under 37 CFR 1.137(b):

Any request for reconsideration of this decision must be submitted within TWO (2) MONTHS from the mail date of this decision. Extensions of time under 37 CFR 1.136(a) are permitted. The reconsideration request should include a cover letter entitled "Renewed Petition Under 37 CFR 1.137(b)." There is no fee for the renewed petition. This is **not** a final agency decision within the meaning of 5 USC 704.

A grantable petition under 37 CFR 1.137(b) must be accompanied by: (1) the required reply, unless previously filed; (2) the petition fee as set forth in 37 CFR 1.17(m); (3) a statement that the entire delay in filing the required reply from the due date for the reply until the filing of a grantable petition pursuant to 37 CFR 1.137(b) was unintentional; and (4) any terminal disclaimer (and fee as set forth in 37 CFR 1.20(d)) required by 37 CFR 1.137(d).

The instant petition lacks item (1), the required reply.

On renewed petition, petitioner must submit a proper reply in response to the final Office action mailed August 12, 2003. The proposed reply to a final Office action required for

consideration of a petition to revive must be either (1) **a Notice of Appeal (and fee required by law)**; (2) an amendment that *prima facie* places the application in condition for allowance; (3) the filing of a continuing application under 37 CFR 1.53(b) or if applicable, 1.53(d); or (4) a request for a continuing examination (RCE) under 37 CFR 1.114.

Further correspondence with respect to this matter should be addressed as follows:

By mail: Mail Stop Petitions
Commissioner for Patents
P.O. Box 1450
Alexandria VA 22313-1450

By FAX: (703) 872-9306
Attn: Office of Petitions

Telephone inquiries concerning this decision should be directed to the undersigned at (703) 305-0272[1].

Cliff Congo
Petitions Attorney
Office of Petitions

[1] At the end of September, this phone number will change to (571)272-3207.

UNITED STATES PATENT AND TRADEMARK OFFICE

Commissioner for Patents
United States Patent and Trademark Office
P.O. Box 1450
Alexandria, VA 22313-1450
www.uspto.gov

W DANIEL SWAYZE JR
TEXAS INSTRUMENTS INC
PO BOX 655474 MX 3999
DALLAS TX 75265

COPY MAILED

MAY 0 4 2005

OFFICE OF PETITIONS

In re Application of	:	
Priegnitz, et al.	:	
Application No. 09/768,504	:	ON PETITION
Filed: January 25, 2001	:	
Attorney Docket No. TI-31455	:	

This is a decision on the "PETITION TO REVIVE PATENT APPLICATION UNINTENTIONALLY ABANDONED UNDER 37 CFR 1.137(b)", filed November 15, 2004.

The petition under 37 CFR 1.137(b) is **GRANTED**.

The above-identified application became abandoned for failure to file a proper reply to the final Office action mailed August 12, 2003. No extensions of time under 37 CFR 1.136(a) were obtained. Accordingly, the above-identified application became abandoned on November 13, 2003. A Notice of Abandonment was mailed on May 18, 2004. Applicants filed a petition to revive under 37 CFR 1.137(b) on May 25, 2004, which was treated as a petition to withdraw the holding of abandonment under 37 CFR 1.181, in light of applicants' statement that no petition fee was due because applicants were not at fault. The petition was dismissed in a decision mailed on September 2, 2004.

Petitioner was instructed that a grantable petition under 37 CFR 1.137(b) must include a proper reply in response to the final Office action mailed August 12, 2003. The proposed reply to a final Office action required for consideration of a petition to revive must be either (1) **a Notice of Appeal (and fee required by law)**; (2) an amendment that *prima facie* places the application in condition for allowance; (3) the filing of a continuing application under 37 CFR 1.53(b) or if applicable, 1.53(d); or (4) a request for a continuing examination (RCE) under 37 CFR 1.114.

With the instant petition, petitioner still has not submitted a Notice of Appeal and fee. Rather, petitioner has again submitted the Appeal Brief. However, because petitioner included an authorization to charge any additional fees to his deposit account, the $340 fee for a Notice of Appeal has been charged to Deposit Account No. 20-0668. In addition, the $1,370 fee for a petition under 37 CFR 1.137(b), and the $340 fee for the Appeal Brief, have also been charged to the deposit account.

Accordingly, petitioner has met the requirements to revive the above-identified application. Petitioner has paid the petition fee, submitted the proper reply in the form of a Notice of Appeal (and fee), and made a statement of unintentional delay.

37 CFR 1.137(b)(3) requires a statement that the entire delay in filing the required reply from the due date for the reply until the filing of a grantable petition pursuant to 37 CFR 1.137(b) was unintentional. The statement contained in the instant petition varies from the language required by 37 CFR 1.137(b)(3). The statement contained in the instant petition is being construed as the statement required by 37 CFR 1.137(b)(3). Petitioner must notify the Office if this is **not** a correct interpretation of the statement contained in the instant petition.

Pursuant to 37 CFR 1.136, an extension of time must be filed prior to the expiration of the maximum period obtainable for reply to avoid abandonment. Accordingly, since the $420 extension of time fee submitted on March 5, 2004 was subsequent to the maximum period obtainable for reply (February 12, 2004), this fee has been refunded to petitioner's deposit account. Similarly, the $430 fee for a two month extension charged to the deposit account on November 15, 2004 has also been refunded.

Lastly, as the $290 fee for a request for an oral hearing was already charged to petitioner's deposit account on March 5, 2004,

the $300 fee charged on November 15, 2004 has been refunded.

The application is being forwarded to Group Art Unit 2838 for consideration of the Appeal Brief filed March 5, 2004 (copy re-supplied with the instant petition).

Telephone inquiries concerning this decision should be directed to the undersigned at (571)272-3207.

Cliff Congo
Petitions Attorney
Office of Petitions

UNITED STATES PATENT AND TRADEMARK OFFICE

Commissioner for Patents
United States Patent and Trademark Office
P.O. Box 1450
Alexandria, VA 22313-1450
www.uspto.gov

DANIEL R. MCCLURE,
THOMAS, KAYDEN, HORSTEMEYER & RISLEY, LLP
100 GALLERIA PARKWAY,
SUITE 1750
ATLANTA GA 30339

COPY MAILED

JUN 1 6 2009

OFFICE OF PETITIONS

In re Application of	:	
Shou-Te Yu	:	
Application No. 09/768,526	:	DECISION ON PETITION
Filed: January 24, 2001	:	
Attorney Docket No. 3158/01208	:	

This is a decision on the petition, filed October 3, 2003, under 37 CFR 1.181 requesting withdrawal of the holding of abandonment in the above-identified application. The delay in addressing this petition is regretted.

The petition is **GRANTED**.

This application was held abandoned for failure to reply to the Notice of Allowance and Issue Fee Due mailed April 11, 2003. A Notice of Abandonment was mailed on September 17, 2003.

Petitioner asserts that the issue and publication fees had been previously paid on February 19, 2003, in response to the Notice of Allowance and Issue Fee due mailed on January 28, 2003. Petitioner specifically indicated the issue and publication fees filed February 19, 2003 be reapplied in response to the Notice of Allowance and Issue Fee Due mailed April 11, 2003. A review of the file confirms petitioner's position.

The Notice of Abandonment mailed September 17, 2003 is hereby vacated and the holding of abandonment withdrawn.

This application is being referred to the Office of Data Management for processing of the application into a patent.

Telephone inquiries concerning this decision should be directed to Carl Friedman at (571) 272-6842.

Carl Friedman
Petitions Examiner
Office of Petitions

UNITED STATES PATENT AND TRADEMARK OFFICE

Commissioner for Patents
United States Patent and Trademark Office
P.O. Box 1450
Alexandria, VA 22313-1450
www.uspto.gov

THOMAS, KAYDEN, HORSTEMEYER & RISLEY, LLP
600 GALLERIA PARKWAY, S.E.
STE 1500
ATLANTA GA 30339-5994

COPY MAILED

JUN 16 2009

OFFICE OF PETITIONS

In re Application of	:	
Shou-Te Yu	:	
Application No. 09/768,526	:	DECISION ON PETITION
Filed: January 24, 2001	:	
Attorney Docket No. 3158/01208	:	

This is a decision on the petition, filed October 3, 2003, under 37 CFR 1.181 requesting withdrawal of the holding of abandonment in the above-identified application. The delay in addressing this petition is regretted.

The petition is **GRANTED**.

This application was held abandoned for failure to reply to the Notice of Allowance and Issue Fee Due mailed April 11, 2003. A Notice of Abandonment was mailed on September 17, 2003.

Petitioner asserts that the issue and publication fees had been previously paid on February 19, 2003, in response to the Notice of Allowance and Issue Fee due mailed on January 28, 2003. Petitioner specifically indicated the issue and publication fees filed February 19, 2003 be reapplied in response to the Notice of Allowance and Issue Fee Due mailed April 11, 2003. A review of the file confirms petitioner's position.

The Notice of Abandonment mailed September 17, 2003 is hereby vacated and the holding of abandonment withdrawn.

This application is being referred to the Office of Data Management for processing of the application into a patent.

Telephone inquiries concerning this decision should be directed to Carl Friedman at (571) 272-6842.

Carl Friedman
Petitions Examiner
Office of Petitions

UNITED STATES PATENT AND TRADEMARK OFFICE

#14

COMMISSIONER FOR PATENTS
UNITED STATES PATENT AND TRADEMARK OFFICE
P.O. BOX 1450
ALEXANDRIA, VA 22313-1450
www.uspto.gov

MAILED

MAR 2 2 2004

Office of the Director
Group 3600

MORGAN, LEWIS & BOCKIUS LLP
1701 MARKET STREET
PHILADELPHIA PA 19103-2921

In re Application of
Robert J. Schena et al.
Application No. 09/768,535
Filed: January 24, 2001
For: PRINTED MEDIUM ACTIVATED INTERACTIVE COMMUNICATION

DECISION ON PETITION TO WITHDRAW THE HOLDING OF ABANDONMENT.

This is in response to the Petition to Withdraw the Holding of Abandonment filed in the United States Patent and Trademark Office on February 20, 2004.

The petition is **GRANTED** in view of the following evidence of timely filing :

☐ Postcard receipt being dated_____.

☐ USPTO return facsimile receipt dated _____.

☐ Certificate of Mailing/Transmission signed on _____.
and supported by a statement under 37 C.F.R. 1.8(b)(3).

☐ Hand Delivery Receipt of the specific documents submitted dated _____.

☐ Certificate of Transmission of CPA under 37 C.F.R. 1.6 filed on _____.

☐ Express Mail Receipt under 37 C.F.R. 1.10 dated _____.

☒ Originally sent response filed December 23, 2003 has been found and matched with the application.

This application is being forwarded to the Supervisory Legal Instruments Examiner for entry of the response and then to the examiner for prompt action.

KJD/mjz: 3/15/04

KENNETH J. DORNER
SPECIAL PROGRAMS EXAMINER
TECHNOLOGY CENTER 3600

United States Patent and Trademark Office

COMMISSIONER FOR PATENTS
UNITED STATES PATENT AND TRADEMARK OFFICE
WASHINGTON, D.C. 20231
www.uspto.gov

Paper No. 5

STEVENS, DAVIS, MILLER & MOSHER, L.L.P.
Suite 850
1615 L Street NW
Washington, DC 20036

MAILED

MAR 05 2002

TECHNOLOGY CENTER 2800
SPECIAL PROGRAM CENTER

In re Application of	)	
INOUE	)	
Application No. 09/768,556	)	DECISION ON PETITION
Filed: January 25, 2001	)	
For: SEMICONDUCTOR DEVICE	)	

This is a decision on the petition filed on February 15, 2002, to reset the period for reply to an Office action due to late receipt of the action.

The petition is **granted**.

Petitioner states the date of receipt of the Office action dated December 28, 2001, at the correspondence address of record was January 29, 2002. The petition includes a copy of the cover sheet of the Office action having a date of receipt of "JAN 29 2002" stamped thereon.

Petitions to reset the period for reply to an Office action due to late receipt of the action are treated in MPEP § 710.06. As set forth in MPEP § 710.06, a petition to restart the previously set period for reply should be filed within two weeks of the date of receipt of the Office action at the correspondence address. In view of the fact that the Office action was mailed between October 13, 2001 and January 2, 2002, when delivery of mail from the Office to certain regions of the country was delayed, this requirement will be waived. Petitioner is advised that any future petition to reset the period for reply to an Office action may not receive favorable consideration unless filed within two weeks of the date of receipt.

Accordingly, the shortened statutory period that was originally set forth in the Office action originally mailed on December 28, 2001 is hereby reset to run FROM THE RECEIPT DATE OF January 29, 2002.

for Clayton E. LaBalle
Edward Glick, Special Program Examiner
Technology Center 2800 - Semiconductors, Electrical
and Optical Systems and Components

SPE RESPONSE FOR CERTIFICATE OF CORRECTION

Paper No.: _____

DATE : April 30, 2008

TO SPE OF : ART UNIT 2667

SUBJECT : Request for Certificate of Correction for Appl. No 09/768602patent no6928087

Please respond to this request for a certificate of correction within 7 days.

Please review the requested changes/corrections as shown in the **COCIN** document(s) in the IFW application image. No new matter should be introduced, nor should the scope or meaning of the claims be changed.

Please complete the response (see below) and forward the completed response to scanning using document code **COCX**.

Magdalene Talley

_____

Certificates of Correction Branch

703-308-9390 ext. 116

Thank You For Your Assistance

The request for issuing the above-identified correction(s) is hereby:

Note your decision on the appropriate box.

- ☑ **Approved** — **All** changes apply.
- ☐ **Approved in Part** — Specify below which changes **do not** apply.
- ☐ **Denied** — State the reasons for denial below.

Comments: _____

_____

_____

_____

_____

_____ **SPE**

2616 **Art Unit**

UNITED STATES PATENT AND TRADEMARK OFFICE

Commissioner for Patents
United States Patent and Trademark Office
P.O. Box 1450
Alexandria, VA 22313-1450
www.uspto.gov

HARNESS, DICKEY & PIERCE, P.L.C.
P.O. BOX 828
BLOOMFIELD HILLS MI 48303

COPY MAILED
MAY 27 2004
OFFICE OF PETITIONS

In re Patent No. 6,718,125
Issue Date: April 6, 2004
Application No. **09/768,617**
Filed: January 25, 2001
Attorney Docket Number: 3174-000001/CPA

ON PETITION

This is a decision on the petition filed March 1, 2004 under 37 CFR 1.183 to waive the rules of 37 CFR 3.81(a) and accept the correction of the assignee on the front page of the above-identified patent.

The petition under 37 CFR 1.183 is **GRANTED**.

Assignment data printed on the patent is based solely on the information so supplied on the Issue Fee Transmittal Form (PTOL-85B). A review of the record indicates that the Issue Fee Transmittal Form (PTOL-85B), submitted February 13, 2004 incorrectly identified the assignee as Emerson Motor Co..

As the request agrees with Office assignment records, upon the submission of a petition under 37 CFR 1.323, the certificate of correction fee in the amount of $100.00 and a completed form PTO-1050, a certificate of correction will be issued to correct the face of the patent with the corrected assignee information of Emerson Electric Co..

Telephone inquiries concerning this matter may be directed to the undersigned Petitions Attorney at (703) 305-4497.

Patricia Faison-Ball

Patricia Faison-Ball
Senior Petitions Attorney
Office of Petitions

RJF

UNITED STATES PATENT AND TRADEMARK OFFICE

Under Secretary of Commerce for Intellectual Property and
Director of the United States Patent and Trademark Office
Washington, D.C. 20231
www.uspto.gov

Paper No. _____

CHRISTIE, PARKER & HALE, LLP
350 WEST COLORADO BOULEVARD
SUITE 500
PASADENA CA 91105

RECEIVED
SEP 1 3 2002
Christie, Parker & Hale, LLP

OIPE JC144
JAN 3 0 2003
PATENT & TRADEMARK OFFICE

COPY MAILED
SEP 0 9 2002
OFFICE OF PETITIONS

In re Application of
Erlend Olson et al
Application No. 09/768,674
Filed: January 24, 2001
Attorney Docket No. 41289/PBH/B600

ON PETITION

CASE # 41289 ACTION Pet. Granted
REMINDER _____ DUE DATE _____
DEADLINE _____

This is a decision on the petition, filed by facsimile transmission on September 9, 2002, under 37 CFR 1.313(c)(2) to withdraw the above-identified application from issue after payment of the issue fee.

The petition is **GRANTED**.

The above-identified application is withdrawn from issue for consideration of a submission under 37 CFR 1.114 (request for continued examination). See 37 CFR 1.313(c)(2).

Petitioner is advised that the issue fee paid on July 2, 2002 in the above-identified application cannot be refunded. If, however, the above-identified application is again allowed, petitioner may request that it be applied towards the issue fee required by the new Notice of Allowance.[1]

It does not appear that the instant petition is signed by an attorney of record. However, in accordance with 37 CFR 1.34(a), the signature of Richard J. Paciulan appearing on the correspondence shall constitute a representation to the United

---

[1] The request to apply the issue fee to the new Notice must be made in writing and should be accompanied by the new Issue Fee Transmittal Form PTOL-85(b), along with a copy of this decision. Additionally, if the issue fee has increased from the previously paid issue fee, the balance due must be submitted. **Failur to *timely* request *in writing* that the previously paid issue fe be applied towards the new Notice and payment of any balanc due will result in the abandonment f the application.**

States Patent and Trademark Office that he is authorized to represent the particular party in whose behalf he acts. However, if Mr. Paciulan desires to receive correspondence regarding this file, the appropriate power of attorney documentation must be submitted. A courtesy copy of this decision is being mailed to Mr. Paciulan, the petitioner herein. However, until otherwise instructed, all future correspondence regarding this application file will be directed solely to the above-noted correspondence address of record.

Telephone inquiries should be directed to the undersigned at (703) 305-8859.

After receipt of the file in the Office of Petitions, the file will be forwarded to Technology Center AU 2819 for processing of the request for continued examination under 37 CFR 1.114.

Karen Creasy

Karen Creasy
Petitions Examiner
Office of Petitions
Office of the Deputy Commissioner
for Patent Examination Policy

cc:

RICHARD J. PACIULAN
CHRISTIE, PARKER & HALE, LLP
P.O. BOX 7068
PASADENA, CA 91109-7068

SPE RESPONSE FOR CERTIFICATE OF CORRECTION

DATE : ~~3/22/06~~ 7/25/06

Paper No.: —

TO SPE OF : ART UNIT 2819

SUBJECT : Request for Certificate of Correction for Appl. No.: 9/768674 Patent No.: 6933870B2

Please respond to this request for a certificate of correction within 7 days.

Please review the requested changes/corrections as shown in the **COCIN** document(s) in the IFW application image. No new matter should be introduced, nor should the scope or meaning of the claims be changed.

Please complete the response (see below) and forward the completed response to scanning using document code **COCX**.

Virginia Tolbert
Certificates of Correction Branch

703-308-9390 ext. 113

Thank You For Your Assistance

The request for issuing the above-identified correction(s) is hereby:
Note your decision on the appropriate box.

- ☒ **Approved** — All changes apply.
- ☐ **Approved in Part** — Specify below which changes **do not** apply.
- ☐ **Denied** — State the reasons for denial below.

Comments: _____

Rexford Barnie — SPE

2819 — Art Unit

OIPE IAP64
FEB 17 2006
PATENT & TRADEMARK OFFICE

PATENT
41289/B600

IN THE UNITED STATES PATENT AND TRADEMARK OFFICE

U.S. Patent No. : 6,933,870 **Confirmation No.** 3900
Issued : August 23, 2005
Inventor(s) : Erlend Olson, et al.
Application No. : 09/768,674
Filed : January 24, 2001
Title : METHOD AND APPARATUS FOR EFFICIENT MIXED SIGNAL PROCESSING IN A DIGITAL AMPLIFIER

REQUEST FOR CERTIFICATE OF CORRECTION

Office of Certificates of Correction
Commissioner for Patents
P.O. Box 1450
Alexandria, VA 22313-1450

P. O. Box 7068
Pasadena, CA 91109-7068
February 15, 2006

Commissioner:

Submitted herewith are two copies of a proposed Certificate of Correction for the above-referenced patent. The errors are identified in detail in the proposed certificate, and the corresponding text in the application is located as follows:

Location in Patent	Location in Application
PTO errors:	
On the Title Page	
(56) References Cited	IDS filed September 9, 2002
(56) References Cited	IDS filed September 9, 2002
(56) References Cited	IDS filed September 9, 2002
(56) References Cited	IDS filed September 9, 2002
Applicant errors:	
In the Drawings	
FIG. 4, Sheet 3 of 8	Informal Drawings as Filed, FIG. 4

Applicant(s) errors were unintentional and inadvertent, and were made in good faith through

02/21/2006 CCHAU1 00000011 6933870
01 FC:1811 100.00 OP

I hereby certify that this correspondence is being deposited with the U.S. Postal Service as first class mail in an envelope addressed to: Commissioner for Patents, P.O. Box 1450, Alexandria, VA 22313-1450 on: Feb 15, 2006
(Date of Deposit)

oversight. Correction is accordingly requested under 35 U.S.C. § 255, and our check for the $100 statutory fee is enclosed. Any deficiency or overpayment should be charged or credited to Deposit Account No. 03-1728. Please show our docket number with any credit or charge to our Deposit Account.

Correction of applicant(s) errors does not constitute new matter or require reexamination. Approval of this certificate is respectfully requested

Respectfully submitted,

CHRISTIE, PARKER & HALE, LLP

By _____

Raymond R. Tabandeh
Reg. No. 43,945
626/795-9900

RRT/clv
Enclosures: Certificate of Correction (2)
Check $100
CLV PAS657641.1-*-12/15/05 11:43 AM

PTO/SB/44 (04-04)
Approved for use through 04/30/2007. OMB 0651-0033
U.S. Patent and Trademark Office; U.S. DEPARTMENT OF COMMERCE
Under the Paperwork Reduction Act of 1995, no persons are required to respond to a collection of information unless it displays a valid OMB control number.
(Also Form PTO-1050)

UNITED STATES PATENT AND TRADEMARK OFFICE
CERTIFICATE OF CORRECTION

PATENT NO. : 6,933,870
DATED : Aug. 23, 2005
INVENTOR(S) : Olson et al.

It is certified that error appears in the above-identified patent and that said Letters Patent is hereby corrected as shown below:

On the Title Page

(56) References Cited	Insert --5,077,539 A 12/1991 Howatt--
(56) References Cited	Insert --5,617,058 A 4/1997 Adrian et al.--
(56) References Cited	Insert --5,777,512 A 7/1998 Tripathi et al.--
(56) References Cited	Insert --Steven R. Norsworthy, et al. ed., Delta-Sigma Data Converters-Theory, Design and Simulation, pp. 152-155, 178-183, IEEE Press, New York.--

In the Drawings

FIG. 4, Sheet 3 of 8	Delete Drawing Sheet 3 and substitute therefore the Drawing Sheet, consisting of Fig. 4, as shown on the attached page

MAILING ADDRESS OF SENDER:

CHRISTIE, PARKER & HALE, LLP.
P.O. Box 7068
Pasadena, California 91109-7068

PATENT NO. 6,933,870

No. of additional copies

This collection of information is required by 37 CFR 1.322, 1.323, and 1.324. The information is required to obtain or retain a benefit by the public which is to file (and by the USPTO to process) an application. Confidentiality is governed by 35 U.S.C. 122 and 37 CFR 1.14. This collection is estimated to take 1.0 hour to complete, including gathering, preparing, and submitting the completed application form to the USPTO. Time will vary depending upon the individual case. Any comments on the amount of time you require to complete this form and/or suggestions for reducing this burden, should be sent to the Chief Information Officer, U.S. Patent and Trademark Office, U.S. Department of Commerce, P.O. Box 1450, Alexandria, VA 22313-1450. DO NOT SEND FEES OR COMPLETED FORMS TO THIS ADDRESS. SEND TO: **Attention Certificate of Corrections Branch, Commissioner for Patents, P.O. Box 1450, Alexandria, VA 22313-1450.**

If you need assistance in completing the form, call 1-800-PTO-9199 and select option 2.

PTO/SB/44 (04-04)
Approved for use through 04/30/2007. OMB 0651-0033
U.S. Patent and Trademark Office; U.S. DEPARTMENT OF COMMERCE
Under the Paperwork Reduction Act of 1995, no persons are required to respond to a collection of information unless it displays a valid OMB control number.
(Also Form PTO-1050)

UNITED STATES PATENT AND TRADEMARK OFFICE
CERTIFICATE OF CORRECTION

PATENT NO. : 6,933,870
DATED : Aug. 23, 2005
INVENTOR(S) : Olson et al.

It is certified that error appears in the above-identified patent and that said Letters Patent is hereby corrected as shown below:

On the Title Page

(56) References Cited	Insert --5,077,539 A 12/1991 Howatt--
(56) References Cited	Insert --5,617,058 A 4/1997 Adrian et al.--
(56) References Cited	Insert --5,777,512 A 7/1998 Tripathi et al.--
(56) References Cited	Insert --Steven R. Norsworthy, et al. ed., Delta-Sigma Data Converters-Theory, Design and Simulation, pp. 152-155, 178-183, IEEE Press, New York.--

In the Drawings

FIG. 4, Sheet 3 of 8	Delete Drawing Sheet 3 and substitute therefore the Drawing Sheet, consisting of Fig. 4, as shown on the attached page

MAILING ADDRESS OF SENDER:

CHRISTIE, PARKER & HALE, LLP.
P.O. Box 7068
Pasadena, California 91109-7068

PATENT NO. 6,933,870

No. of additional copies

This collection of information is required by 37 CFR 1.322, 1.323, and 1.324. The information is required to obtain or retain a benefit by the public which is to file (and by the USPTO to process) an application. Confidentiality is governed by 35 U.S.C. 122 and 37 CFR 1.14. This collection is estimated to take 1.0 hour to complete, including gathering, preparing, and submitting the completed application form to the USPTO. Time will vary depending upon the individual case. Any comments on the amount of time you require to complete this form and/or suggestions for reducing this burden, should be sent to the Chief Information Officer, U.S. Patent and Trademark Office, U.S. Department of Commerce, P.O. Box 1450, Alexandria, VA 22313-1450. DO NOT SEND FEES OR COMPLETED FORMS TO THIS ADDRESS. SEND TO: **Attention Certificate of Corrections Branch, Commissioner for Patents, P.O. Box 1450, Alexandria, VA 22313-1450.**

If you need assistance in completing the form, call 1-800-PTO-9199 and select option 2.

OIPE IAP84
FEB 17 2006
PATENT & TRADEMARK OFFICE

FIG. 4

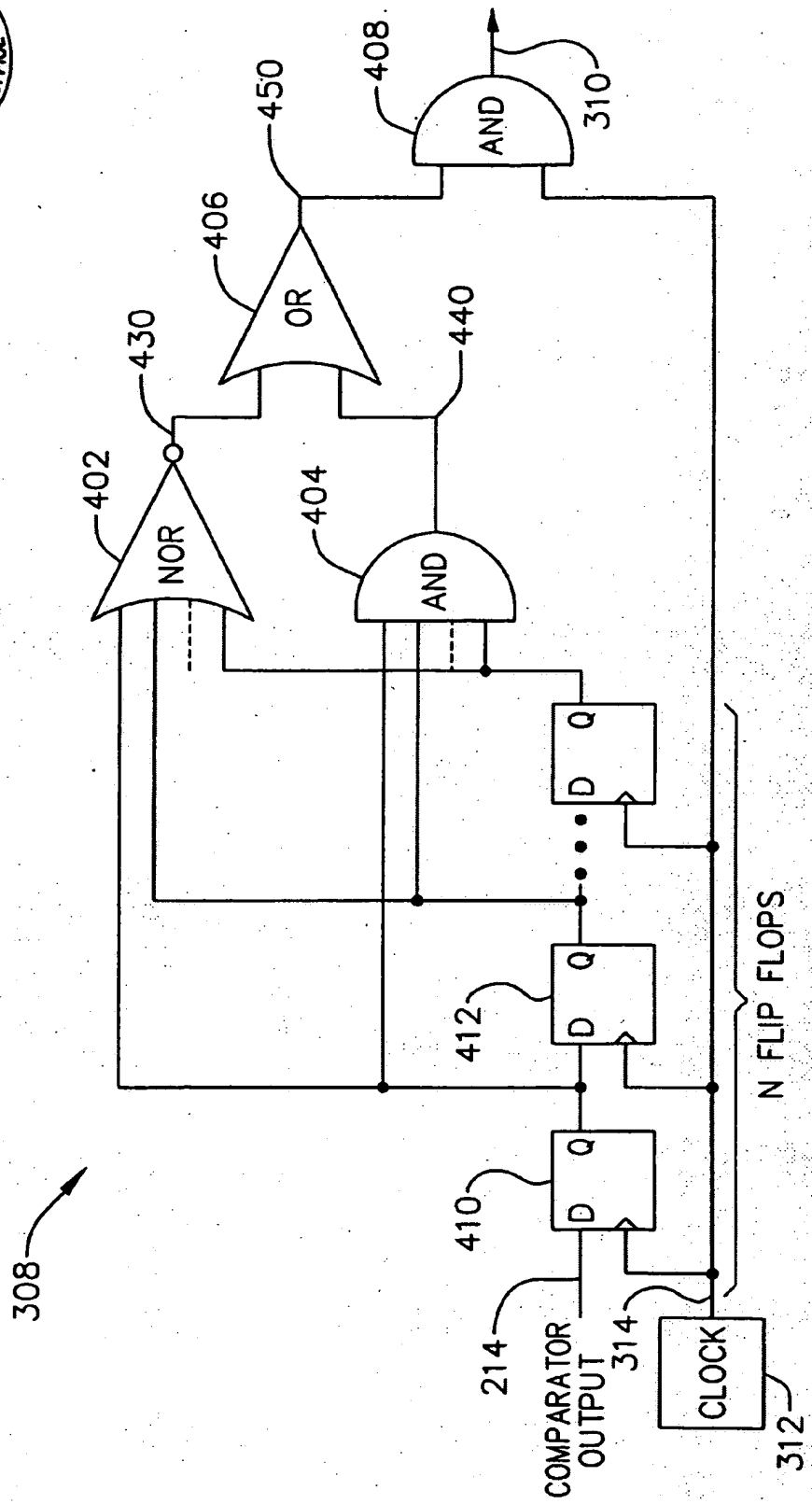

UNITED STATES PATENT AND TRADEMARK OFFICE

COMMISSIONER FOR PATENTS
UNITED STATES PATENT AND TRADEMARK OFFICE
WASHINGTON, D.C. 20231
www.uspto.gov

Paper No. 5

LAW OFFICES OF MICHAEL DRYJA
704 228TH AVENUE, N.E.
PMB 694
SAMMAMISH, WA 98074

COPY MAILED

JAN 23 2002

OFFICE OF PETITIONS

In re Application of
Wright, et al.
Application No. 09/768,694
Filed: January 24, 2001
Attny. Docket No. 1033.006US1

DECISION GRANTING PETITION

This is a decision on the petition entitled, "PETITION TO ESTABLISH PRIOR RECEIPT IN THE PTO OF ITEMS CONSIDERED AS OMITTED BY THE PTO -- RESPONSE TO NOTICE OF INCOMPLETE APPLICATION," filed June 5, 2001, requesting that the above-identified application be accorded a filing date of January 24, 2001.

The application was deposited on January 24, 2001. On April 11, 2001, the Office of Initial Patent Examination mailed a " Notice of Incomplete Nonprovisional Application" informing petitioners that the application had not been accorded a filing date because the specification filed on January 24, 2001 did not include a claim, as is required by 35 USC 112. In addition, the Office required that the abstract be placed on a separate sheet.

In response to the Notice, petitioners timely filed an abstract on a separate sheet of paper and the present petition on June 5, 2001. Petitioners request a filing date on the basis that the specification filed on January 24, 2001 included at least one claim, albeit in non-standard claim format.

A review of the original application papers reveals that page 78 of the specification contains claims that do not comply with the current Office practice of having each claim begin with "I (or we) claim" or it's equivalent. MPEP 608.01(m) Instead, 2 of the claims begin with the title of the invention -- "The Flexible, Orienting, and Better Shopping Wallet for Neitizens is..." Because two of the claims begin with words that are substantially similar to an acceptable preamble to the substantive elements of claims -- "The invention claimed is"--, the application is entitled to a filing date of January 24, 2001.

The petition is **granted**.

The claims, however, are informal. Petitioners should revise the claims to begin with the words, "We claim..." or "The invention claimed is.." prior to examination on the merits.

It is noted that the third listed claim refers to itself. As this claim is an improper dependent claim, it is not acceptable.

Office financial records indicate that petitioners were charged twice for the instant petition. Pursuant to petitioners' request,

a treasury check for $130.00 will be scheduled in due course.

The application is being returned to Office of Initial Patent Examination for further processing, with a filing date of January 24, 2001.

Any inquiries pertaining to this matter may be directed to Petitions Attorney E. Shirene Willis at (703) 308-6712.

Beverly M. Flanagan
Supervisory Petitions Examiner
Office of Petitions
Office of the Deputy Commissioner
for Patent Examination Policy

UNITED STATES PATENT AND TRADEMARK OFFICE

Commissioner for Patents
United States Patent and Trademark Office
Washington, D.C. 20231
www.uspto.gov

S. PETER LUDWIG
DARBY & DARBY P.C.
805 THIRD AVENUE
NEW YORK, NY 10022

COPY MAILED
OCT 3 1 2001
OFFICE OF PETITIONS

In re Application of
Shlomo Shlafman
Application No. 09/768,697
Filed: January 23, 2001
Attorney Docket No. 6727/1I204US1

: DECISION GRANTING
: PETITION

This is a decision on the paper filed May 4, 2001, which is being treated as a petition requesting that the above-identified application be accorded a filing date of January 23, 2001, rather than the presently accorded filing date of January 24, 2001.

Petitioners allege that the application was deposited in Express Mail service on January 23, 2001. In support, the petition is accompanied by a copy of Express Mail receipt No. EL706719616US (the same Express Mail number found on the original application papers located in the official file) showing a "date in" of January 23, 2001.

In view of the above, the petition is granted. The application will be accorded a filing date of January 23, 2001.

This application is being forwarded to the Office of Initial Patent Examination Division for further processing with a filing date of January 23, 2001, and issuance of a corrected filing receipt. Afterwards, the application will be returned to Technology Center Art Unit 2164 for examination in due course.

Telephone inquiries concerning this matter may be directed to Karen Creasy at (703) 305-8859.

Brian Hearn

Brian Hearn
Senior Petitions Examiner
Office of Petitions
Office of the Deputy Commissioner
for Patent Examination Policy

UNITED STATES PATENT AND TRADEMARK OFFICE

Commissioner for Patents
United States Patent and Trademark Office
P.O. Box 1450
Alexandria, VA 22313-1450
www.uspto.gov

DAVIDSON, DAVIDSON & KAPPEL, LLC
485 SEVENTH AVENUE, 14TH FLOOR
NEW YORK NY 10018

COPY MAILED
APR 03 2007
OFFICE OF PETITIONS

In re Application of	:	
Callahan et al.	:	
Application No. 09/768,736	:	ON PETITION
Filed: January 24, 2001	:	
Attorney Docket No. 600.1119	:	

This is a decision on the petition under 37 C.F.R. § 1.137(b), filed February 2, 2007, to revive the above-identified application.

The petition is **GRANTED.**

The petition satisfies the conditions for revival pursuant to the provisions of 37 CFR 1.137(b) in that (1) the reply in the form of the Issue Fee Transmittal with payment of the issue and publication fees; (2) the petition fee; and (3) the required statement of unintentional delay have been received. Accordingly, the response has been accepted as having been unintentionally delayed.

This matter is being referred to the Publishing Division for processing into a patent.

Telephone inquiries regarding this decision should be directed to the undersigned at (571) 272-3206.

Liana Walsh
Petitions Examiner
Office of Petitions

UNITED STATES PATENT AND TRADEMARK OFFICE

Commissioner for Patents
United States Patent and Trademark Office
P.O. Box 1450
Alexandria, VA 22313-1450
www.uspto.gov

In re Patent No. 6620161
Issue Date: September 16,2003
Application No. 09768768
Filed: January 24,2001
Attorney Docket No. ETH-1450

:
:DECISION GRANTING PETITION
:UNDER 37 CFR 1.378(c)
:

This is a decision on the electronic petition, filed October 14,2008 ,under 37 CFR 1.378(c) to accept the unintentionally delayed payment of the 3.5 year maintenance fee for the above-identified patent.

The petition is **GRANTED**.

The maintenance fee is accepted, and the above-identified patent reinstated as of October 14,2008 .
This decision also constitutes notice that the fee has been accepted. An electronic copy of the petition and this decision has been created as an entry in the Image File Wrapper. Nevertheless, petitioner should print and retain an independent copy.

Telephone inquiries related to this electronic decision should be directed to the Electronic Business Center at 1-866-217-9197.

Under the Paperwork Reduction Act of 1995, no persons are required to respond to a collection of information unless it displays valid OMB control number.

PETITION TO ACCEPT UNINTENTIONALLY DELAYED PAYMENT OF MAINTENANCE FEE IN AN EXPIRED PATENT (37 CFR 1.378(c))

Patent Number	Issue Date (YYYY-MM-DD)	Application Number	Filing Date (YYYY-MM-DD)	Docket Number (if applicable)
6620161	2003-09-16	09768768	2001-01-24	

CAUTION: Maintenance fee (and surcharge, if any) payment must correctly identify: (1) the patent number and (2) the application number of the actual U.S. application leading to issuance of that patent to ensure the fee(s) is/are associated with the correct patent. 37 CFR 1.366(c) and (d).

SMALL ENTITY
☐ Patentee claims, or has previously claimed, small entity status. See 37 CFR 1.27.

LOSS OF ENTITLEMENT TO SMALL ENTITY STATUS
☐ Patentee is no longer entitled to small entity status. See 37 CFR 1.27(g)

NOT Small Entity		Small Entity	
Fee	Code	Fee	Code
◉ 3 ½ year	(1551)	○ 3 ½ year	(2551)
○ 7 ½ year	(1552)	○ 7 ½ year	(2552)
○ 11 ½ year	(1553)	○ 11 ½ year	(2553)

SURCHARGE
The surcharge required by 37 CFR 1.20(i)(2) (Fee Code 1558) must be paid as a condition of accepting unintentionally delayed payment of the maintenance fee.

MAINTENANCE FEE (37 CFR 1.20(e)-(g))
The appropriate maintenance fee must be submitted with this petition.

STATEMENT
THE UNDERSIGNED CERTIFIES THAT THE DELAY IN PAYMENT OF THE MAINTENANCE FEE TO THIS PATENT WAS UNINTENTIONAL

PETITIONER(S) REQUEST THAT THE DELAYED PAYMENT OF THE MAINTENANCE FEE BE ACCEPTED AND THE PATENT REINSTATED

THIS PORTION MUST BE COMPLETED BY THE SIGNATORY OR SIGNATORIES

37 CFR 1.378(d) states: "Any petition under this section must be signed by an attorney or agent registered to practice before the Patent and Trademark Office, or by the patentee, the assignee, or other party in interest."

I certify, in accordance with 37 CFR 1.4(d)(4) that I am

◉ An attorney or agent registered to practice before the Patent and Trademark Office

○ A sole patentee

○ A joint patentee; I certify that I am authorized to sign this submission on behalf of all the other patentees.

○ A joint patentee; all of whom are signing this e-petition

○ The assignee of record of the entire interest

Patent Practitioner			
A signature of the applicant or representative is required in accordance with 37 CFR 1.33 and 10.18. Please see 37 CFR 1.4(d) for the form of the signature			
Signature	/J. Gary Mohr/	Date (YYYY-MM-DD)	2008-10-14
Name	J. Gary Mohr	Registration Number	27575

This collection of information is required by 37 CFR 1.378(c). The information is required to obtain or retain a benefit by the public which is to file (and by the USPTO to process) an application. Confidentiality is governed by 35 U.S.C. 122 and 37 CFR 1.11 and 1.14. This collection is estimated to take 1 hour to complete, including gathering, preparing, and submitting the completed application form to the USPTO. Time will vary depending upon the individual case. Any comments on the amount of time you require to complete this form and/ or suggestions for reducing this burden, should be sent to the Chief Information Officer, U.S. Patent and Trademark Office, U.S. Department of Commerce, P.O. Box 1450, Alexandria, VA 22313-1450. DO NOT SEND FEES OR COMPLETED FORMS TO THIS ADDRESS. **This form can only be used when in conjunction with EFS-Web. If this form is mailed to the USPTO, it may cause delays in reinstating the patent.**

Privacy Act Statement

The Privacy Act of 1974 (P.L. 93-579) requires that you be given certain information in connection with your submission of the attached form related to a patent application or patent. Accordingly, pursuant to the requirements of the Act, please be advised that: (1) the general authority for the collection of this information is 35 U.S.C. 2(b)(2); (2) furnishing of the information solicited is voluntary; and (3) the principal purpose for which the information is used by the U.S. Patent and Trademark Office is to process and/or examine your submission related to a patent application or patent. If you do not furnish the requested information, the U.S. Patent and Trademark Office may not be able to process and/or examine your submission, which may result in termination of proceedings or abandonment of the application or expiration of the patent.

The information provided by you in this form will be subject to the following routine uses:

1. The information on this form will be treated confidentially to the extent allowed under the Freedom of Information Act (5 U.S.C. 552) and the Privacy Act (5 U.S.C. 552a). Records from this system of records may be disclosed to the Department of Justice to determine whether the Freedom of Information Act requires disclosure of these record s.

2. A record from this system of records may be disclosed, as a routine use, in the course of presenting evidence to a court, magistrate, or administrative tribunal, including disclosures to opposing counsel in the course of settlement negotiations.

3. A record in this system of records may be disclosed, as a routine use, to a Member of Congress submitting a request involving an individual, to whom the record pertains, when the individual has requested assistance from the Member with respect to the subject matter of the record.

4. A record in this system of records may be disclosed, as a routine use, to a contractor of the Agency having need for the information in order to perform a contract. Recipients of information shall be required to comply with the requirements of the Privacy Act of 1974, as amended, pursuant to 5 U.S.C. 552a(m).

5. A record related to an International Application filed under the Patent Cooperation Treaty in this system of records may be disclosed, as a routine use, to the International Bureau of the World Intellectual Property Organization, pursuant to the Patent Cooperation Treaty.

6. A record in this system of records may be disclosed, as a routine use, to another federal agency for purposes of National Security review (35 U.S.C. 181) and for review pursuant to the Atomic Energy Act (42 U.S.C. 218(c)).

7. A record from this system of records may be disclosed, as a routine use, to the Administrator, General Services, or his/her designee, during an inspection of records conducted by GSA as part of that agency's responsibility to recommend improvements in records management practices and programs, under authority of 44 U.S.C. 2904 and 2906. Such disclosure shall be made in accordance with the GSA regulations governing inspection of records for this purpose, and any other relevant (i.e., GSA or Commerce) directive. Such disclosure shall not be used to make determinations about individuals.

8. A record from this system of records may be disclosed, as a routine use, to the public after either publication of the application pursuant to 35 U.S.C. 122(b) or issuance of a patent pursuant to 35 U.S.C. 151. Further, a record may be disclosed, subject to the limitations of 37 CFR 1.14, as a routine use, to the public if the record was filed in an application which became abandoned or in which the proceedings were terminated and which application is referenced by either a published application, an application open to public inspections or an issued patent.

9. A record from this system of records may be disclosed, as a routine use, to a Federal, State, or local law enforcement agency, if the USPTO becomes aware of a violation or potential violation of law or regulation.

UNITED STATES PATENT AND TRADEMARK OFFICE

COMMISSIONER FOR PATENTS
UNITED STATES PATENT AND TRADEMARK OFFICE
P.O. BOX 1450
ALEXANDRIA, VA 22313-1450
www.uspto.gov

MAY - 5 2004

NOVOZYMES NORTH AMERICA, INC.
500 FIFTH AVENUE
SUITE 1600
NEW YORK NY 10110

In re Application of	:
Charlotte Johansen	:
Serial No.: 09/768,803	: PETITION DECISION
Filed: January 24, 2001	:
Attorney Docket No.: 5248.210	:

This is in response to the petition under 37 CFR 1.59(b), filed March 3, 2004, to expunge the reply filed February 25, 2004 and replace it with a revised copy of the reply filed with the petition.

Petitioner requests that the document noted above be expunged, but gives no reason for expunging the document other than that the copy supplied with the petition is an exact copy thereof with one bolded phrase deleted. A comparison of the documents shows this to be correct. The deleted portion appears to be an internal note or query inadvertently not removed from the originally submitted document. However the note or query does not appear to relate to proprietary information or other material which may be deleted from an application upon petition. See M.P.E.P. 724.05, Part II. The comment also appears to have no effect on determination of patentability.

The petition is **DENIED.**

Should there be any questions with respect to this decision, please contact William R. Dixon, Jr., by mail addressed to: Director, Technology Center 1600, P.O. Box 1450, Alexandria, VA 22313-1450, or by telephone at 571-272-0519 or by facsimile transmission at general Office facsimile number, 703-872-9306.

Bruce M. Kisliuk
Director, Technology Center 1600

UNITED STATES PATENT AND TRADEMARK OFFICE

COMMISSIONER FOR PATENTS
UNITED STATES PATENT AND TRADEMARK OFFICE
P.O. BOX 1450
ALEXANDRIA, VA 22313-1450
www.uspto.gov

Paper No. 26

I.P. Docketing
PATERSON, BELKNAP, WEBB &TYLER
1133 Avenue to the Americas
New York NY 10036

COPY MAILED
SEP 2 3 2003
OFFICE OF PETITIONS

In re Application of
Suzy Charbit et al.
Application No. 09/768,816
Filed: January 23, 2001
Attorney Docket No. H7708-002
Title: TREATMENT OF PATHOLOGICAL CONDITIONS CHARACTERIZED BY AN INCREASED IL-1 LEVEL

DECISION GRANTING
PETITION UNDER 37 C.F.R. §1.137(b)

This is a decision on the petition filed on August 1, 2003, pursuant to 37 C.F.R. §1.137(b)[1], to revive the above-identified application.

The above-identified application became abandoned for failure to reply within the meaning of 37 C.F.R §1.113 in a timely manner to the final Office action mailed December 4, 2002, which set a shortened statutory period for reply of three (3) months. On February 4, 2003, a response was received. On June 20, 2003, an advisory action was mailed, indicating that the response failed the place the application in condition for allowance. No further extensions of time were received. Accordingly, the above-identified application became abandoned on March 5, 2003 A Notice of Abandonment was mailed on July 16, 2003.

With the instant petition, petitioner has filed the petition fee, a Request for Continued

1 A grantable petition pursuant to 37 CFR 1.137(b) must be accompanied by:
(1) The reply required to the outstanding Office action or notice, unless previously filed;
(2) The petition fee as set forth in § 1.17(m);
(3) A statement that the entire delay in filing the required reply from the due date for the reply until the filing of a grantable petition pursuant to this paragraph was unintentional. The Commissioner may require additional information where there is a question whether the delay was unintentional, and;
(4) Any terminal disclaimer (and fee as set forth in § 1.20(d)) required pursuant to paragraph (d) of this section.

Examination (RCE) under 37 C.F.R. §1.114, as well as the associated fee, and has made the proper statement of unintentional delay. The RCE has been accepted as the required reply under 37 C.F.R. §1.137(b)(1). The request for reconsideration, previously filed on February 4, 2003, shall serve as the required submission.

As such, the petition is **GRANTED**.

After this decision is mailed, the application will be forwarded to Technology Center 1600 for consideration of the submission under 37 C.F.R. §1.114, the previously filed request for reconsideration.

Telephone inquiries regarding this decision should be directed to the undersigned at (703) 305-0011.

Paul Shanoski
Attorney
Office of Petitions
United States Patent and Trademark Office

UNITED STATES PATENT AND TRADEMARK OFFICE

COMMISSIONER FOR PATENTS
UNITED STATES PATENT AND TRADEMARK OFFICE
P.O. BOX 1450
ALEXANDRIA, VA 22313-1450
www.uspto.gov

ALSTON & BIRD LLP
BANK OF AMERICA PLAZA
101 SOUTH TRYON STREET, SUITE 4000
CHARLOTTE NC 28280-4000

COPY MAILED

APR 1 0 2006

OFFICE OF PETITIONS

ON PETITION

In re Application of :
Plate, et al. :
Application No. 09/768,817 :
Filed: January 25, 2001 :
Attorney Docket No. 9392-043-999 :
For: METHOD AND SYSTEM FOR MATCHING BIDS

This is a decision on the petition under 37 CFR 1.181, filed March 24, 2006, requesting that the Office withdraw the holding of abandonment of the above-identified application.

The petition under 37 CFR 1.181 is **GRANTED**.

This application was held abandoned for failure to respond in a timely manner to the non-final Office action, mailed August 11, 2005, which set forth an extendable three (3) month period for reply. The Office contended that this application became abandoned on November 12, 2005 for failure to reply to the August 11, 2005 non-final Office action. A Notice of Abandonment was mailed on February 23, 2006.

Petitioners assert an amendment and a request for a three month extension of time were timely Express Mailed to and received by the Office on February 13, 2006. The undersigned finds this assertion completely convincing as the se documents are present in the application file and Office financial records show that the required extension of time fee was charged.[1]

The petition under 37 CFR 1.181 is **granted** and the Notice of Abandonment is **vacated**. No petition fee has been or will be charged in connection with this matter.

Accordingly, the application file will be forwarded to Technology Center A.U. 3624 for consideration of the amendment filed February 13, 2006.

[1] As petitioners requested on February 20, 2006, a small entity three month extension of time fee has been retained. The excess money (large entity fee – small entity fee) submitted on February 13, 2006 was credited to petitioners' deposit account on March 15, 2004.

Telephone inquiries pertaining to this matter may be directed to the undersigned at (571) 272-3230.

E. Shirene Willis

E. Shirene Willis
Senior Petitions Attorney
Office of Petitions
Office of the Deputy Commissioner
for Patent Examination Policy

UNITED STATES PATENT AND TRADEMARK OFFICE

COMMISSIONER FOR PATENTS
UNITED STATES PATENT AND TRADEMARK OFFICE
WASHINGTON, D.C. 20231
www.uspto.gov

Paper No. 11

NOVEN PHARMACEUTICALS, INC.
11960 S.W., 144TH STREET
MIAMI, FL 33186

COPY MAILED

JAN 25 2002

OFFICE OF PETITIONS

In re Application of
Houze, et al.
Application No. 09/768,831
Filed: January 24, 2001
Attorney Docket No. NOPH/100/JGK

ON PETITION

This is a decision on the petition filed May 14, 2001 to accord a filing date of January 24, 2001.

The application was deposited on January 24, 2001. However, on March 12, 2001, the Office of Initial Patent Examination mailed a "Notice of Incomplete Application" requiring a specification and a newly executed oath/declaration covering the specification. The Notice stated that the filing date would be the date of receipt of the omitted specification.

In response, petitioner filed a paper entitled, "PETITION TO ACCEPT MISSING ITEMS IN RESPONSE TO NOTICE OF INCOMPLETE NONPROVISIONAL APPLICATION" and a copy of the specification with claims, abstract and drawings. The petition pointed to the fact that the application was a continuation of application no. 09/479,966 and the contents of application no. 09/479,966 was specifically incorporated by reference in the transmittal letter for the above-identified application, filed on January 24, 2001.

A review of the file confirms that the transmittal letter deposited on January 24, 2001, incorporated by reference the entire disclosure of prior application No. 09/479,966.

Based on petitioners' representation that the specification supplied on May 14, 2001, is a part of the disclosure of application No. 09/479,966 and the entire disclosure of application No. 09/479,966 was specifically incorporated by reference in the present application on January 24, 2001, it appears that the specification was present in the Office on January 24, 2001, albeit in the file of another application, i.e., application No. 09/479,966. Therefore, on petition, the application may be accorded the requested filing date.

The petition is granted.

However, the petition fee will not be refunded, since the petition was required to correct applicants' filing error and to accord the application the requested filing date.

Of course, the primary examiner is expected to compare the specification supplied on May 14, 2001, to the disclosure of prior application No. 09/479,966 in order to verify that the specification is, in fact, part of the disclosure of the prior

application.

The application is being returned to Initial Patent Examination Division for correction of the filing date to January 24, 2001.

Thereafter, the application will be forwarded to Technology Center 3700 for examination in due course, using the revised specification and drawings submitted on November 5, 2001.

Telephone inquiries specific to this matter should be directed to Petitions Attorney E. Shirene Willis at (703) 308-6712.

Beverly M. Flanagan
Supervisory Petitions Examiner
Office of Petitions
Office of the Deputy Commissioner
for Patent Examination Policy

Under the Paperwork Reduction Act of 1995, no persons are required to respond to a collection of information unless it displays valid OMB control number.

PETITION TO ACCEPT UNINTENTIONALLY DELAYED PAYMENT OF MAINTENANCE FEE IN AN EXPIRED PATENT (37 CFR 1.378(c))

Patent Number	Issue Date (YYYY-MM-DD)	Application Number	Filing Date (YYYY-MM-DD)	Docket Number (if applicable)
6652521	2003-11-25	09768907	2001-01-24	

CAUTION: Maintenance fee (and surcharge, if any) payment must correctly identify: (1) the patent number and (2) the application number of the actual U.S. application leading to issuance of that patent to ensure the fee(s) is/are associated with the correct patent. 37 CFR 1.366(c) and (d).

SMALL ENTITY
☐ Patentee claims, or has previously claimed, small entity status. See 37 CFR 1.27.

LOSS OF ENTITLEMENT TO SMALL ENTITY STATUS
☐ Patentee is no longer entitled to small entity status. See 37 CFR 1.27(g)

NOT Small Entity		Small Entity	
Fee	Code	Fee	Code
◉ 3 ½ year	(1551)	○ 3 ½ year	(2551)
○ 7 ½ year	(1552)	○ 7 ½ year	(2552)
○ 11 ½ year	(1553)	○ 11 ½ year	(2553)

SURCHARGE
The surcharge required by 37 CFR 1.20(i)(2) (Fee Code 1558) must be paid as a condition of accepting unintentionally delayed payment of the maintenance fee.

MAINTENANCE FEE (37 CFR 1.20(e)-(g))
The appropriate maintenance fee must be submitted with this petition.

STATEMENT
THE UNDERSIGNED CERTIFIES THAT THE DELAY IN PAYMENT OF THE MAINTENANCE FEE TO THIS PATENT WAS UNINTENTIONAL

PETITIONER(S) REQUEST THAT THE DELAYED PAYMENT OF THE MAINTENANCE FEE BE ACCEPTED AND THE PATENT REINSTATED

THIS PORTION MUST BE COMPLETED BY THE SIGNATORY OR SIGNATORIES

37 CFR 1.378(d) states: "Any petition under this section must be signed by an attorney or agent registered to practice before the Patent and Trademark Office, or by the patentee, the assignee, or other party in interest."

I certify, in accordance with 37 CFR 1.4(d)(4) that I am

◉ An attorney or agent registered to practice before the Patent and Trademark Office

○ A sole patentee

○ A joint patentee; I certify that I am authorized to sign this submission on behalf of all the other patentees.

○ A joint patentee; all of whom are signing this e-petition

○ The assignee of record of the entire interest

Patent Practitioner			
A signature of the applicant or representative is required in accordance with 37 CFR 1.33 and 10.18. Please see 37 CFR 1.4(d) for the form of the signature			
Signature	/J. Gary Mohr/	Date (YYYY-MM-DD)	2008-10-14
Name	J. Gary Mohr	Registration Number	27575

This collection of information is required by 37 CFR 1.378(c). The information is required to obtain or retain a benefit by the public which is to file (and by the USPTO to process) an application. Confidentiality is governed by 35 U.S.C. 122 and 37 CFR 1.11 and 1.14. This collection is estimated to take 1 hour to complete, including gathering, preparing, and submitting the completed application form to the USPTO. Time will vary depending upon the individual case. Any comments on the amount of time you require to complete this form and/ or suggestions for reducing this burden, should be sent to the Chief Information Officer, U.S. Patent and Trademark Office, U.S. Department of Commerce, P.O. Box 1450, Alexandria, VA 22313-1450. DO NOT SEND FEES OR COMPLETED FORMS TO THIS ADDRESS. **This form can only be used when in conjunction with EFS-Web. If this form is mailed to the USPTO, it may cause delays in reinstating the patent.**

Privacy Act Statement

The Privacy Act of 1974 (P.L. 93-579) requires that you be given certain information in connection with your submission of the attached form related to a patent application or patent. Accordingly, pursuant to the requirements of the Act, please be advised that: (1) the general authority for the collection of this information is 35 U.S.C. 2(b)(2); (2) furnishing of the information solicited is voluntary; and (3) the principal purpose for which the information is used by the U.S. Patent and Trademark Office is to process and/or examine your submission related to a patent application or patent. If you do not furnish the requested information, the U.S. Patent and Trademark Office may not be able to process and/or examine your submission, which may result in termination of proceedings or abandonment of the application or expiration of the patent.

The information provided by you in this form will be subject to the following routine uses:

1. The information on this form will be treated confidentially to the extent allowed under the Freedom of Information Act (5 U.S.C. 552) and the Privacy Act (5 U.S.C. 552a). Records from this system of records may be disclosed to the Department of Justice to determine whether the Freedom of Information Act requires disclosure of these record s.

2. A record from this system of records may be disclosed, as a routine use, in the course of presenting evidence to a court, magistrate, or administrative tribunal, including disclosures to opposing counsel in the course of settlement negotiations.

3. A record in this system of records may be disclosed, as a routine use, to a Member of Congress submitting a request involving an individual, to whom the record pertains, when the individual has requested assistance from the Member with respect to the subject matter of the record.

4. A record in this system of records may be disclosed, as a routine use, to a contractor of the Agency having need for the information in order to perform a contract. Recipients of information shall be required to comply with the requirements of the Privacy Act of 1974, as amended, pursuant to 5 U.S.C. 552a(m).

5. A record related to an International Application filed under the Patent Cooperation Treaty in this system of records may be disclosed, as a routine use, to the International Bureau of the World Intellectual Property Organization, pursuant to the Patent Cooperation Treaty.

6. A record in this system of records may be disclosed, as a routine use, to another federal agency for purposes of National Security review (35 U.S.C. 181) and for review pursuant to the Atomic Energy Act (42 U.S.C. 218(c)).

7. A record from this system of records may be disclosed, as a routine use, to the Administrator, General Services, or his/her designee, during an inspection of records conducted by GSA as part of that agency's responsibility to recommend improvements in records management practices and programs, under authority of 44 U.S.C. 2904 and 2906. Such disclosure shall be made in accordance with the GSA regulations governing inspection of records for this purpose, and any other relevant (i.e., GSA or Commerce) directive. Such disclosure shall not be used to make determinations about individuals.

8. A record from this system of records may be disclosed, as a routine use, to the public after either publication of the application pursuant to 35 U.S.C. 122(b) or issuance of a patent pursuant to 35 U.S.C. 151. Further, a record may be disclosed, subject to the limitations of 37 CFR 1.14, as a routine use, to the public if the record was filed in an application which became abandoned or in which the proceedings were terminated and which application is referenced by either a published application, an application open to public inspections or an issued patent.

9. A record from this system of records may be disclosed, as a routine use, to a Federal, State, or local law enforcement agency, if the USPTO becomes aware of a violation or potential violation of law or regulation.

UNITED STATES PATENT AND TRADEMARK OFFICE

Commissioner for Patents
United States Patent and Trademark Office
P.O. Box 1450
Alexandria, VA 22313-1450
www.uspto.gov

In re Patent No. 6652521
Issue Date: November 25,2003
Application No. 09768907
Filed: January 24,2001
Attorney Docket No. ETH-1447

:
:DECISION GRANTING PETITION
:UNDER 37 CFR 1.378(c)
:

This is a decision on the electronic petition, filed October 14,2008 ,under 37 CFR 1.378(c) to accept the unintentionally delayed payment of the 3.5 year maintenance fee for the above-identified patent.

The petition is **GRANTED**.

The maintenance fee is accepted, and the above-identified patent reinstated as of October 14,2008 . This decision also constitutes notice that the fee has been accepted. An electronic copy of the petition and this decision has been created as an entry in the Image File Wrapper. Nevertheless, petitioner should print and retain an independent copy.

Telephone inquiries related to this electronic decision should be directed to the Electronic Business Center at 1-866-217-9197.

UNITED STATES PATENT AND TRADEMARK OFFICE

Commissioner for Patents
United States Patent and Trademark Office
P.O. Box 1450
Alexandria, VA 22313-1450
www.uspto.gov

NOV 0 3 2005

Stuart E. Beck, Esquire
One Penn Center #601
1617 J.F.K. Boulevard
Philadelphia, PA 19103-1806

Paper No. 16

In re Application of
BROWN, SUZANNE DAWN
Appl. No.: 09/768,924
Filed: January 24, 2001
Attorney Docket Number: 567-02US

DECISION DISMISSING PETITION
37 CFR 1.181

This is a decision on petitioner's request filed April 28, 2003 to review the holding of abandonment, mailed April 8, 2003. In view of petitioner's statements, the submission is being treated as a petition under 37 CFR 1.181. No fee is required for this petition.

The petition is dismissed.

A review of the file history indicates that a final rejection was mailed on June 27, 2002 setting a shortened statutory period for response of 3 months. Extensions of time were available under 37 CFR 1.136(a); however, in no event may a reply be timely filed after 6 months from the mailing date of the final rejection. Failure to reply within the set or extended period for reply will, by statute, cause the application to become abandoned (35 USC 133). An after-final amendment was timely filed on October 7, 2002 due to a certificate of mailing dated September 27, 2002. The examiner issued an advisory action (mailed October 25, 2002) indicating that the proposed amendment would not be entered because the amendment raises new issues that would require further consideration and/or search. The examiner issued a second advisory action (mailed December 31, 2002) based on the same after-final amendment (received October 7, 2002 with a certificate of mailing dated September 27, 2002). The second advisory action also indicated that the proposed amendment would not be entered. No extensions of time were filed after the final rejection, so the application became abandoned by statute 3 months after the mailing of the final rejection. Even if petitions for extensions of time had been made, the latest a timely response could have been filed was December 27, 2002.

After the application became abandoned by statute, a telephone interview was held. Since there is no mechanism to stay the period for response being the statutory deadline, the statement that the time period for response is March 31, 2003 (over 9 months after the mailing of the final rejection) is clearly an error. The second after-final response filed March 31, 2003 is not timely. The application remains abandoned.

Petitioners may file a renewed petition, without fee, addressing the points raised above. Any request for reconsideration of this decision must be submitted within TWO (2) MONTHS from the mail date of this decision, 37 CFR 1.181(f). No extensions of time under 37 CFR 1.136(a) are permitted. Petitioner may wish to consider filing a petition to revive under 37 CFR 1.137.

Richard A. Bertsch, Director
Technology Center 3700

UNITED STATES PATENT AND TRADEMARK OFFICE

Commissioner for Patents
United States Patent and Trademark Office
P. O. Box 1450
Alexandria, VA 22313-1450
www.uspto.gov

Paper No. 9

W. EDWARD JOHANSEN
11661 SAN VICENE BOULEVARD
LOS ANGELES, CA 90049

COPY MAILED

AUG 2 0 2003

OFFICE OF PETITIONS

In re Application of	:	
Stephen Carlson	:	
Application No. 09/768,955	:	ON PETITION
Filed: January 25, 2001	:	
Attorney Docket No. CARLSON#1(CIP)(CIP)	:	

This is a decision on the petition under 37 CFR 1.137(b), filed August 1, 2003, to revive the above-identified application.

The petition is **GRANTED**.

The above-identified application became abandoned for failure to reply in a timely manner to the non-final Office action mailed April 26, 2002, which set a shortened statutory period for reply of three (3) months. No extensions of time under the provisions of 37 CFR 1.136(a) were obtained. Accordingly, the above-identified application became abandoned on July 27, 2002.

Telephone inquiries concerning this decision should be directed to Irvin Dingle at (703) 306-5684.

The application file is being forwarded to Technology Center 3600 for further processing.

Irvin Dingle
Petitions Examiner
Office of Petitions
Office of the Deputy Commissioner
for Patent Examination Policy

UNITED STATES PATENT & TRADEMARK OFFICE

UNDER SECRETARY OF COMMERCE FOR INTELLECTUAL PROPERTY AND DIRECTOR OF THE UNITED STATES PATENT AND TRADEMARK OFFICE
Washington, D.C. 20231

MAILED

SEP 09 2003

DIRECTOR'S OFFICE
TECHNOLOGY CENTER 3600

Robert Wolter
Beusse, Brownlee, Bowdin & Wolter, P.A.
390 North Orange Avenue
Suite 2500
Orlando, FL 32801

In re Application of
William T. Hamrick
Application No. 09/768,964
Filed: January 24, 2001
For: PORTABLE COVERED WALKWAY

: DECISION ON PETITION
: TO WITHDRAW THE
: HOLDING OF
: ABANDONMENT

This is in reply to applicant's PETITION TO WITHDRAW HOLDING OF ABANDONMENT filed in the Patent and Trademark Office on June 26, 2003.

The petition is **GRANTED**.

A review of the file record reveals that the Office action mailed October 29, 2002 included an objection to the drawings. Applicant's amendment received March 4, 2003 did not include any response to the drawing objection. A Notice of Abandonment was mailed June 18, 2003 indicating that although a response was received it was not considered a proper reply.

A proper response by the examiner should have been a notice of non-responsive amendment which would have given applicant one month to respond to the drawing objection. The Notice of Abandonment was sent out prematurely.

The application is being forwarded to the examiner for consideration of the amendment filed March 4, 2003 and supplemental amendment received March 31, 2003. Response to the drawing objection is found in the petition wherein applicant argues that the drawings are, in fact, proper as filed. The examiner is also to consider this.

John J. Love
Patent Technology Center 3600
(703) 308-1020
Facsimilie No: (703) 306-4597

UNITED STATES PATENT AND TRADEMARK OFFICE

Commissioner for Patents
United States Patent and Trademark Office
P.O. Box 1450
Alexandria, VA 22313-1450
www.uspto.gov

FEB 23 2005

In re Application of
Dave W. Gordon
Application No. 09/768,969
Filed: January 24, 2001
Attorney Docket No. 0063948.4

: DECISION ON PETITION

This is a decision on the petition filed by facsimile transmission on August 19, 2004 by which petitioner requests withdrawal of the holding that this application is abandoned for failure to pay the issue and publication fees that were due on or before June 25, 2004. The petition is considered pursuant to 37 CFR 1.181, and no fee is required.

The petition is granted.

Petitioner alleges that this application is not abandoned because petitioner did not receive the Notice of Allowance dated March 25, 2004, or any of the attachments thereto. Therefore, the fee could not be paid. While petitioner has provided an adequate showing of non-receipt of the Notice of Allowance in accordance with the requirements of the Notice published at 1156 OG 53 pertaining to abandonment resulting from nonreceipt of Office correspondence, the record itself shows that a proper change of correspondence address was filed on November 18, 2003 but the correspondence address of record was not changed. Based upon petitioner's showing, and upon the fact that the Office did not mail the Notice of Allowance to the proper correspondence address, it is clear this application is not abandoned.

Accordingly, the Notice of Abandonment is hereby vacated, the holding of abandonment is withdrawn, and the application is restored to pending status. The application is being forwarded to the Head Supervisory Applications Examiner for Technology Center 3700 to have the change of correspondence address filed on November 18, 2003 entered into the PALM system. Thereafter, the Head Supervisory Applications Examiner will mail a new Notice of Allowance, together with a complete copy of the Notice of Allowability and all attachments thereto. The period for payment of the Issue Fee will run THREE MONTHS from the date upon which the new Notice of Allowance is mailed, and cannot be extended pursuant to 37 CFR 1.136. **The period for reply to certain requirements that may be set forth on the attached Notice of Allowability with respect to the submission of an oath or declaration, and with respect to certain requirements pertaining to the submission of formal drawings or drawing corrections, can no longer be extended. See 37 CFR 1.85(c), and 37 CFR 1.136(c) as amended, effective November 7, 2000, published at 65 Federal Register 54670 and 54674, respectively.**

After the above mailings are accomplished, the application will be forwarded to the Office of Patent Publication for processing into a patent.

PETITION GRANTED.

Richard A Bertsch

E. R. Kazenske, Director
Technology Center 3700

Frank J. Catalano
Gable & Gotwals
100 West 5th St.
10th Floor
Tulsa, OK 74103

UNITED STATES PATENT AND TRADEMARK OFFICE

COMMISSIONER FOR PATENTS
UNITED STATES PATENT AND TRADEMARK OFFICE
P.O. BOX 1450
ALEXANDRIA, VA 22313-1450
www.uspto.gov

MAILED
NOV 27 2006
Technology Center 2100

MAILED
NOV 7 2 2006
Technology Center 2100

James H. Morris
WOLF, GREENFIELD & SACKS, P.C.
600 Atlantic Avenue
Boston, MA 02210

In re Application of:
David SMITH
Application No. 09/769,004
Filed: January 24, 2001
For: DESIGN FLOW CHECKER

DECISION ON PETITION TO WITHDRAW HOLDING OF ABANDONMENT UNDER 37 CFR § 1.181

This is a decision on the petition, filed on 06 June 2005, under 37 CFR §1.181 to withdraw holding of abandonment of the above-identified application.

This application was held abandoned for failure to timely file a proper reply to the Final Office Action mailed on 29 June 2004. A Notice of Abandonment was mailed on 20 May 2005.

In support of the petition, petitioner asserts that the Final Office Action mailed 29 June 2004 was not received. Petitioner supplies (1) a statement that a search of the file jacket and the docket log of the application to confirm that the Final Office Action was not received; and (2) a copy of the docket log where the Final Office Action would have been entered had it been received and docketed by attorneys of record in the application.

The provided copy of the docket log shows no entry indicating receipt of the Final Office Action mailed on 29 June 2004.

The relevant portion of MPEP § 711.03(c) states:

> The showing required to establish nonreceipt of an Office communication must include a statement from the practitioner stating that the Office communication was not received by the practitioner and attesting to the fact that a search of the file jacket and docket records indicates that the Office communication was not received. A copy of the docket record where the nonreceived Office communication would have been entered had it been received and docketed must be attached to and referenced in practitioner's statement. See Notice entitled "Withdrawing the Holding of Abandonment When Office Actions Are Not Received," 1156 O.G. 53 (November 16, 1993).

Petitioner has met the criteria of set out in MPEP § 711.03(c) for establishing failure to receive the Final Office Action mailed 29 June 2004.

For the above, the petition is **GRANTED**. The abandonment is **WITHDRAWN**.

The Final Office Action has been remailed and attached herewith.

Vincent N. Trans
Special Programs Examiner
Technology Center 2100
Computer Architecture, Software, and
Information Security
571-272-3613

UNITED STATES PATENT AND TRADEMARK OFFICE

Commissioner for Patents
United States Patent and Trademark Office
P.O. Box 1450
Alexandria, VA 22313-1450
www.uspto.gov

WYETH
PATENT LAW GROUP
5 GIRALDA FARMS
MADISON, NJ 07940

COPY MAILED

SEP 0 9 2005

OFFICE OF PETITIONS

In re Application of
Sandanayaka et al.
Application No. 09/769,107
Filed: January 24, 2001
Attorney Docket No. WYTH0144-100

Decision on Petition

This is a decision on the petition filed July 21, 2005. The petition requests a refund of the extension of time fee and the Notice of Appeal fee paid April 25, 2005. The petition also requests the time period from January 7, 2005, until June 22, 2005, be considered Office delay for purposes of calculating any future Patent Term Adjustment.

The petition under 37 CFR 1.181 for a refund is **dismissed**.

The petition under 37 CFR 1.182 requesting at least 46 days be considered Office delay for purposes of Patent Term Adjustment calculations is **dismissed**.

Facts

A Final Office action was mailed October 25, 2004.

Petitioner filed a response in the form of an amendment on January 7, 2005.

As of April 25, 2005, petitioner had not received an Office action and chose to file a Notice of Appeal rather than risk the amendment not being entered and the application becoming abandoned. Petitioner also filed payment for a three month extension of time and the fee for a Notice of Appeal.

On June 22, 2005, the examiner mailed a non-final Office action which withdrew the finality of the prior action.

Petitioner contends the Notice of Appeal and fees would have been unnecessary if the Office had reviewed the amendment and withdrawn the finality of the Office action prior to April 25, 2005. Petitioner requests a refund of the fees.

Petitioner requests that the Patent Term adjustment calculation should reflect a minimum of 46 days of Office delay due to delay from January 7, 2005, until June 22, 2005.

The Refund Request

35 U.S.C. 41 states the Director "shall charge" certain fees. The language of the statute does not permit the Commissioner any discretion with respect to charging the fees set forth therein. The fees listed in 35 U.S.C. 41 include fees for petitions for extensions of time and fees for the filing of appeals.

A fee charged under 35 U.S.C. 41 may only be refunded upon compliance with 35 U.S.C. 42(d) which provides that, "The Commissioner may refund any fee paid by mistake or any amount paid

in excess of that required." The word "may", rather than "shall," in 35 U.S.C. 42(d) is permissive and indicates the Office has the discretion to refund, or not to refund, fees paid by mistake or in excess of that required.

The Office does not have the authority to refund the fee unless:
(1) the fee was paid by mistake, or
(2) the fee was paid in excess of that required.

Petitioner does not contend the fees were paid in excess of the amount fixed by statute. Therefore, the fees can only be refunded if petitioner proves the fees were paid by mistake.

Petitioner cannot obtain a refund by proving that an examiner made a mistake. The statute does not authorize refunds of fees based on prior mistakes by the Office. The statute requires a mistake in the actual payment of the fees by petitioner.

If an applicant intentionally pays a fee, the fee is not paid by mistake. For example, if an applicant files an application and submits the filing fee mistakenly believing the claims are allowable, the applicant will be unable to ask for a refund of all fees if the claims are rejected.

Petitioner did not accidentally or mistakenly submit the extension of time fee or notice of appeal fee. Petitioner intended to pay these fees.

The fact that the examiner withdrew the finality of the Office action does not transform an payment intentionally submitted to the Office into a payment made by mistake. At the time the fee was paid, petitioner intended to pay the fee and the fee was not submitted by mistake. An applicant may not pay a fee and then later determine it was not necessary and ask for a refund of the fee.

In Miessner v. United States, 97 App. D.C. 129, 1956 C.D. 30, 228 F.2d 643, 108 U.S.P.Q. 6 (1955), the Court of Appeals affirmed the Office's determination that applicant's payment of a fee had not been made by mistake. In Miessner, the Office had mailed a final rejection. In response, applicant filed a Notice of Appeal along with the required fee. On the same day applicant filed the appeal and fee, the examiner withdrew the final rejection and allowed the rejected claim. Applicant sought a refund of the appeal fee stating that the fee was paid by mistake since the appeal and fee had been unnecessary. The court stated, "Here the Commissioner decided – correctly, we think – the appeal fee was not paid by mistake."

If an applicant intends to pay a fee and a fee is owed, then the fee is not paid by mistake within the meaning of 35 U.S.C. 42(d). Petitioner intentionally paid the fees and the fees were properly accepted by the Office.

For the reasons above, the fees will not be refunded.

Patent Term Adjustment Request

The Office has not promulgated a rule providing for patent term adjustment determinations prior to the mailing of a Notice of Allowance. Therefore, the petition will be treated as a petition under 37 CFR 1.182.[1]

A petition under 37 CFR 1.182 will not be granted when the rules provide an avenue for obtaining the relief sought. In this case, petitioner can address the delay issue after the Office mails a Notice of Allowance.

---

[1] The Office previously charged $130 for the petition. However, the fee for a petition under 37 CFR 1.182 is $400. Therefore, an additional $270 will be charged to petitioner's deposit account.

The petition will not be granted because it seeks to circumvent the requirements of 37 CFR 1.705. The Office intentionally chose not to create provisions allowing an applicant to address patent term adjustment calculations until after a Notice of Allowance is mailed.

During the adoption of 37 CFR 1.705, the Office addressed an argument alleging an applicant should be allowed to address patent term adjustment with the filing of an Office action.[2] The Office noted that an applicant's arguments would only be relevant if the patent term adjustment accruing as a result of such arguments survived reductions under 37 CFR 1.704(c)(1) through (c)(11). The parties cannot determine if the arguments will be relevant until a Notice of Allowance is mailed. "Thus, the Office is requiring that applicants not address patent term adjustment until the Office makes its initial patent term adjustment determination in the notice of allowance to avoid unnecessary expenditures of resources by applicants and the Office in preparing and handling submissions that turn out to be irrelevant."[3]

For the reasons above, relief under 37 CFR 1.182 will not be granted.

Telephone inquiries should be directed to Petitions Attorney Steven Brantley at (571) 272-3203.

Charles Steven Brantley
Petitions Attorney
Office of Petitions

---

[2] Comment 48, Changes to Implement Patent Term Adjustment Under Twenty-Year Patent Term; Final Rule, 65 Fed. Reg. 56,366, 53,388 (September 18, 2000), 1239 Off. Gaz. Pat. Office 14 (October 3, 2000).

[3] Response to Comment 48, Id.

UNITED STATES PATENT AND TRADEMARK OFFICE

Commissioner for Patents
United States Patent and Trademark Office
P.O. Box 1450
Alexandria, VA 22313-1450
www.uspto.gov
DIW May-09

MOTOROLA, INC.
INTELLECTUAL PROPERTY DEPT. (RKB)
600 NORTH US HIGHWAY 45, AN475
LIBERTYVILLE IL 60048

MAILED

MAY 07 2009

OFFICE OF PETITIONS

In re Application of :
Walczak et al. :
Application Number: 09/769122 :
Filing Date: 01/24/2001 : ON PETITION
Attorney Docket Number: CS10560 :

This is a decision on the petition under 37 CFR 1.137(b)[1] filed on April 7, 2009, to revive the above-identified application.

The petition is **GRANTED**.

This application became abandoned on January 8, 2009, for failure to timely submit the issue and publication fees in response to the Notice of Allowance and Fee(s) Due mailed on October 7, 2008, which set a three (3) month shortened period for reply. Notice of Abandonment was mailed on March 23, 2009.

The statement contained in the instant petition does not set forth that the entire delay from the due date of the required reply to the date of the filing of a grantable petition was

---

[1] Effective December 1, 1997, the provisions of 37 CFR 1.137(b) now provide that where the delay in reply was unintentional, a petition may be filed to revive an abandoned application or a lapsed patent pursuant to 37 CFR 1.137(b). A grantable petition filed under the provisions of 37 CFR 1.137(b) must be accompanied by:

(1) the required reply, unless previously filed. In a nonprovisional application abandoned for failure to prosecute, the required reply may be met by the filing of a continuing application. In a nonprovisional application filed on or after June 8, 1995, and abandoned for failure to prosecute, the required reply may also be met by the filing of a request for continued examination in compliance with § 1.114. In an application or patent, abandoned or lapsed for failure to pay the issue fee or any portion thereof, the required reply must be the payment of the issue fee or any outstanding balance thereof. In an application abandoned for failure to pay the publication fee, the required reply must include payment of the publication fee.

(2) the petition fee as set forth in 37 CFR 1.17(m);

(3) a statement that the entire delay in filing the required reply from the due date for the reply until the filing of a grantable petition pursuant to 37 CFR 1.137(b) was unintentional. The Director may required additional information where there is a question whether the delay was unintentional; and

(4) any terminal disclaimer (and fee as set forth in 37 CFR 1.20(d)) required pursuant to 37 CFR 1.137(c)).

unintentional as required by 37 CFR 1.137(b)(3). However, the statement contained in the instant petition is being so construed. Petitioner **must** notify the Office if this is not a correct interpretation.

Receipt of the issue and publication fees is acknowledged.

The application is referred to the Office of Data Management for processing into a patent.

Telephone inquiries concerning this matter may be directed to the undersigned at (571) 272-3231.

D Wood

Douglas I. Wood
Senior Petitions Attorney
Office of Petitions

UNITED STATES PATENT AND TRADEMARK OFFICE

Commissioner for Patents
United States Patent and Trademark Office
P.O. Box 1450
Alexandria, VA 22313-1450
www.uspto.gov

ROBERT K. LAU
YAZBECK, CLORAN, AND HANSON, LLC
1300SW 5TH AVENUE
SUITE 2750
PORTLAND, OR 97201

COPY MAILED

MAY 19 2005

OFFICE OF PETITIONS

In re Application of :
Harris, et al. :
Application No. 09/769,212 :
Filed: January 25, 2001 :
Attorney Docket No. 1119.04 :

ON PETITION

This is a decision on the petition under 37 CFR 1.137(b), filed June 15, 2004, to revive the above-identified application. The Office sincerely apologizes for the delay in responding to the instant petition and any inconvenience caused to petitioner by this delay.

The petition is **GRANTED**.

This application became abandoned for failure to timely pay the issue fee and publication fee, if applicable, on or before August 13, 2002. Accordingly, this application became abandoned on August 14, 2002. A Notice of Abandonment was mailed on September 26, 2002.

This application is being forwarded to Publishing Division for processing into a patent.

Telephone inquiries concerning this matter may be directed to the undersigned at (571) 272-3228.

Edward J. Tannouse
Petitions Attorney
Office of Petitions/Patent
United States Patent and Trademark Office

UNITED STATES PATENT and TRADEMARK OFFICE
UNDER SECRETARY OF COMMERCE FOR INTELLECTUAL PROPERTY AND
DIRECTOR OF THE UNITED STATES PATENT AND TRADEMARK OFFICE
WASHINGTON, D.C. 20231
WWW.USPTO.GOV

td

Mailed: AUG 2 0 2004

In re application of	:	
Takahiro Yajima et al.	:	DECISION ON
Serial No. 09/769,328	:	PETITION
Filed: January 26, 2001	:	

For: DEPOSITED-FILM FORMATION APPARATUS, AND DEPOSITED-FILM FORMATION PROCESS

This is a decision on the PETITION UNDER 37 CFR 1.181 TO WITHDRAW THE FINALITY OF THE OFFICE ACTION mailed June 12, 2003.

On November 29, 2002, a first office action was mailed by the examiner, rejecting all of the claims present in the application. Applicants responded to this office action with a response filed on April 7, 2003. A final rejection was then mailed on June 13, 2003. A response was filed by applicants to the final rejection on December 12, 2003. An advisory action refusing entry of the amendment was mailed on June 16, 2004.

On August 5, 2003, the instant petition under 37 CFR 1.181 was timely filed to formally request the withdrawal of finality of the June 12, 2003 office action. The Office apologizes for the delay in answering of the instant petition.

Applicant's position for the withdrawal of the finality is that the new grounds of rejection applied by the examiner in the final rejection were not necessitated by applicant's amendments to the claims.

DECISION

37 C.F.R. 1.116 (b) states:

> "§ 1.116 Amendments after final action or appeal.
> (b) After a final rejection or other final action (§ 1.113) in an application or in an ex parte reexamination filed under § 1.510, or an action closing prosecution (§ 1.949) in an inter partes reexamination filed under § 1.913, amendments may be made canceling claims or complying with any requirement of form expressly set forth in a previous Office action. Amendments presenting rejected claims in better form for consideration on appeal may be admitted. **The admission of, or refusal to admit, any amendment after a final rejection, a final action, an action closing prosecution, or any related proceedings will not operate to relieve the application or patent under reexamination from its condition as subject to appeal or to save the application from abandonment under § 1.135, or the reexamination from termination.** No amendment can be made in an inter partes reexamination proceeding after the right of appeal notice under § 1.953 except as provided for in paragraph (d) of this section." (emphasis added)

The Final Rejection, mailed April 22, 2002, clearly states that "Failure to reply within the set or extended period for reply will, by statute, cause the application to become ABANDONED (35 U.S.C. § 133).". The rejection also states "In no event, however, will the statutory period for reply expire later than SIX MONTHS from the mailing date of this final action."

Although Applicants did timely file an amendment in response to the final rejection mailed June 12, 2003, the amendment did not place the case in condition for allowance. Consequently, this application became abandoned by operation of law (35 U.S.C. 133) for applicants' failure to timely file a Notice of Appeal in response to the outstanding final rejection. See Lorenz v. Finkl, 333 F.2d 885, 891, 142 USPQ 26, 30 (CCPA 1964).

Given the finality of the rejection in the instant application, the only courses of action available to the applicant as the end of the 6-month statutory period approached would have been:

(1) To file an amendment, and ensure that it was matched with the file and considered by the Examiner, with the proper extension of time fee, under 37 C.F.R. 1.116, which placed the application in condition for allowance, see MPEP 706.07(f);
(2) File a notice of appeal with the proper extension of time fee, see MPEP 1205;
(3) File a continuing application under 37 C.F.R. 1.53(b) or (d), see MPEP 201.06(c) and (d),
(4) File a request for continued examination under 37 C.F.R. 1.114, or;
(5) Abandon the application.

When applicants did not receive a response before the expiration of the six month statutory period to respond to the final Office action of April 22, 2002, the appropriate action would have been to (l) inquire as to the status of the application, or (2) file a Notice of Appeal (or a continuing application or request for continued examination) to maintain pendency of the application.

While the Office attempts to promptly match with the application file and respond to any incoming papers, there are those instances where delays do occur, as in the instant application. However, it is clear from 37 C.F.R. 1.116 that abandonment of an application is risked when an amendment after a final Office action is proffered by the applicant. The rule clearly indicates that the mere filing of an amendment does not relieve petitioner of the duty of taking appropriate action to save the application from abandonment.

In addition, while it is noted that the instant petition was timely filed prior to the application becoming abandoned, the petition does not prevent the application from becoming abandoned.

Section (f) of Rule 181 states:

(f) The mere filing of a petition will not stay any period for reply that may be running against the application, nor act as a stay of other proceedings. Any petition under this part not filed within two months of the mailing date of the action or notice from which relief is requested may be dismissed as untimely, except as otherwise provided. This two-month period is not extendable.

On its face, the instant petition appears to have merit. However, because the instant application is now abandoned, the petition is moot. Accordingly, the petition for withdrawal of finality is **DISMISSED.**

If a petition to revive the instant application is filed and subsequently granted, then applicants may request reconsideration of the instant petition decision.

JMStone

Jacqueline M. Stone, Director
Technology Center 1700
Chemical and Materials Engineering

FITZPATRICK CELLA HARPER & SCINTO
30 ROCKEFELLER PLAZA
NEW YORK NY 10112

UNITED STATES PATENT AND TRADEMARK OFFICE

COMMISSIONER FOR PATENTS
UNITED STATES PATENT AND TRADEMARK OFFICE
P.O. BOX 1450
ALEXANDRIA, VA 22313-1450
www.uspto.gov

Stephen D. Prodnuk
Pfizer, Inc.
Pfizer La Jolla Labs
10777 Science Center Drive
San Diego, CA 92121

COPY MAILED
MAY 1 0 2005
OFFICE OF PETITIONS

In re Application of	:	
Tang et al.	:	
Application No. 09/769,360	:	DECISION ON APPLICATION
Filed: January 26, 2001	:	FOR
Title: METHODS OF MODULATING	:	PATENT TERM ADJUSTMENT
SERINE/THREONINE PROTEIN	:	
KINASE FUNCTION WITH	:	
QUINAZOLINE-BASED COMPOUNDS	:	

This is a decision on the "REQUEST FOR RECONSIDERATION OF PATENT TERM ADJUSTMENT UNDER 37 CFR §1.705(b)," filed December 16, 2004. Applicants request that a patent term adjustment of 380 days be issued in favor of applicants based in part on the Office taking in excess of three years to issue the patent[1].

The instant application for patent term adjustment requests reconsideration of the patent term adjustment as it relates to the Office's failure to issue the patent within 3 years of the filing date. A decision is being **held in abeyance** until after the actual patent date. Knowledge of the actual date the patent issues is required to calculate the amount, if any, of additional patent term patentee is entitled to for Office failure to issue the patent within 3 years. See § 1.703(b).

Patentees are given **TWO (2) MONTHS** from the issue date of the patent to file a written request for reconsideration of the patent term adjustment for Office failure to issue the patent within 3 years. A copy of this decision should accompany the

[1] Otherwise, applicants agree with the initial determination of patent term adjustment at the time of the mailing of the notice of allowance.

request. Patentees may seek such consideration without payment of an additional fee. However, as to all other bases for seeking reconsideration of the patent term adjustment indicated in the patent, all requirements of § 1.705(d) must be met. Requests for reconsideration on other bases must be timely filed and must include payment of the required fee.

Petitioner is reminded that if an application is entitled to an adjustment under 35 U.S.C. 154(b)(1)(B), the entire period during which the application (except for periods excluded under 35 U.S.C. 154(b)(1)(B)(i)-(iii)), and not just the period beginning three years after the actual filing date of the application, is the period of delay under 35 U.S.C. 154(b)(1)(B) in determining whether periods of delay overlap under 35 U.S.C. 154(b)(2)(A). Thus, any days of delay for Office issuance of the patent more than 3 years after the filing date of the application which overlap with the days of patent term adjustment accorded prior to the issuance of the patent will not result in any additional patent term adjustment. See 35 U.S.C. 154(b)(1)(B), 35 U.S.C. 154(b)(2)(A), and 37 CFR § 1.703(f). See also *Revision of Patent Term Extension and Patent Term Adjustment Provisions; Final Rule*, 69 Fed. Reg. 21704 (April 22, 2004).

The Office acknowledges submission of the $200.00 fee set forth in 37 CFR 1.18(e). No additional fees are required.

The application file is being forwarded to the Office of Patent Publication for issuance of the patent.

Telephone inquiries specific to this matter should be directed to Nancy Johnson, Senior Petitions Attorney, at (571) 272-3219.

Karin Ferriter
Senior Legal Advisor
Office of Patent Legal Administration
Office of Deputy Commissioner
for Patent Examination Policy

UNITED STATES PATENT AND TRADEMARK OFFICE

Commissioner for Patents
United States Patent and Trademark Office
P.O. Box 1450
Alexandria, VA 22313-1450
www.uspto.gov

GEAM - SILICONES - 60SI
IP LEGAL
ONE PLASTICS AVENUE
PITTSFIELD, MA 01201-3697

COPY MAILED

FEB 0 4 2005

OFFICE OF PETITIONS

In re Application of	:	
Jinxia Sun	:	
Application No. 09/769,388	:	ON PETITION
Filed: January 26, 2001	:	
Attorney Docket No. 0070OS	:	

This is a decision on the petition under 37 CFR 1.137(b), filed January 3, 2005, to revive the above-identified application.

The above-identified application became abandoned for failure to reply in a timely manner to the non-final Office action mailed December 30, 2003, which set a shortened statutory period for reply of three (3) months. No extensions of time under the provisions of 37 CFR 1.136(a) were obtained. Accordingly, the above-identified application became abandoned after midnight March 30, 2004.

In response, petitioner submitted with the instant petition an amendment, and an authorization to charge the listed deposit account $1,500 for the petition to revive fee and $1,020 for a three (3) months extension of time. However, an extension of time under 37 CFR 1.136 must be filed prior to the expiration of the maximum extendable period for reply. See In re Application of S., 8 USPQ2d 1630, 1631 (Comm'r Pats. 1988). Accordingly, since the $1,020 extension of time submitted with the petition on January 3, 2005 was subsequent to the maximum extendable period for reply, this fee is unnecessary and will be credited to petitioner's deposit account.

The petition is **GRANTED**.

The application file is being referred to Technology Center Art Unit 1616, for review of the amendment filed with the instant petition.

Telephone inquiries concerning this decision should be directed to the undersigned at (571) 272-3226.

Andrea Smith
Petitions Examiner
Office of Petitions
Office of the Deputy Commissioner
for Patent Examination Policy

UNITED STATES PATENT & TRADEMARK OFFICE
Washington, D.C. 20231

REQUEST FOR PATENT FEE REFUND

1 Date of Request: 2-3-05

2 Serial/Patent # 09/769,388

	3 Please refund the following fee(s):	4 PAPER NUMBER	5 DATE FILED	6 AMOUNT
	Filing			$
	Amendment			$
✓	Extension of Time	—	1-3-05	$ 1,020
	Notice of Appeal/Appeal			$
	Petition			$
	Issue			$
	Cert of Correction/Terminal Disc.			$
	Maintenance			$
	Assignment			$
	Other			$

7 TOTAL AMOUNT OF REFUND $ 1,020

8 TO BE REFUNDED BY:

	Treasury Check
✓	Credit Deposit A/C #:

9 07--0888

10 REASON:

	Overpayment
	Duplicate Payment
✓	No Fee Due (Explanation):

Ext. of Time filed outside ~~Stat~~ Statutory Pd.

11 REFUND REQUESTED BY:

TYPED/PRINTED NAME: Andrea Smith TITLE: Pets. Exmr.

SIGNATURE: Am Smith PHONE: 571-272-3226

OFFICE: Otc. of Petitions

****

THIS SPACE RESERVED FOR FINANCE USE ONLY:

APPROVED: Alicia Kelly DATE: 2/4/05

Instructions for completion of this form appear on the back. After completion, attach white and yellow copies to the official file and mail or hand-carry to:

Office of Finance
Refund Branch
Crystal Park One, Room 802B

FORM PTO 1577
(01/90)

UNITED STATES PATENT AND TRADEMARK OFFICE

COMMISSIONER FOR PATENT
UNITED STATES PATENT AND TRADEMARK OFFIC
WASHINGTON, D.C. 20231
www.uspto.go

Paper No. 12

OCT 7 2003

IP Strategies P.C.
Suite 301
806 7th Street N.W.
Washington, DC 20001

In re Application of:	:	
Rajendra K. Shenoy	:	DECISION ON PETITION
Application No. 09/769,446	:	TO WITHDRAW HOLDING
Filed: January 26, 2001	:	OF ABANDONMENT
Attorney Docket No. FONPT03	:	

This is a decision on the petition filed January 14, 2003, and supplemented on May 28, 2003, June, 10, 2003 and July 24, 2003, under 37 CFR § 1.181, to withdraw the holding of abandonment in the above application. No petition fee is required.

The petition to withdraw the holding of abandonment is **GRANTED.**

The application was held abandoned for the failure timely file a response to an Office action mailed on January 15, 2002. A Notice of Abandonment was mailed on January 02, 2003.

Petitioner asserts that on May 15, 2002, a response was filed. In support of this assertion, petitioner has submitted a copy of the response and a copy of the itemized postcard receipt bearing a date stamp of receipt in the United States Patent and Trademark Office of May 31, 2002 of a 23 page amendment, a transmittal, a petition for a one-month extension of time, and a fee transmittal.

A review of the application file reveals the above noted response was not matched with the application file wrapper at the time of mailing of the Notice of Abandonment. The above identified response filed May 15, 2002 has since been located and matched with the file wrapper.

For the above stated reason, the petition is granted. The Notice of Abandonment is hereby vacated and the holding of abandonment withdrawn. The application is restored to pending status.

The application file is being forwarded to the Technology Center 2800 support staff for processing the response. From there, the application will be forwarded to the examiner for taking appropriate action.

Inquiries regarding this decision should be directed to Clayton E. LaBalle at (703) 308-0519.

Clayton E. LaBalle, Special Programs Examiner
Technology Center 2800
Semiconductors, Electrical and Optical
Systems and Components

UNITED STATES PATENT AND TRADEMARK OFFICE

Commissioner for Patents
United States Patent and Trademark Office
P.O. Box 1450
Alexandria, VA 22313-1450
www.uspto.gov

IP Strategies P.C.
12 ½ Wall Street
Suite 1
Asheville NC 28801

COPY MAILED

MAY 24 2006

OFFICE OF PETITIONS

In re Application of
Shenoy
Application No. 09/769,446
Filed: January 26, 2001
Title: Driven Equilibrium and Fast-Spin Echo Scanning

ON PETITION

This is a decision on the petition under 37 CFR 1.181 to withdraw the holding of abandonment, filed May 5, 2006.

The petition to withdraw the holding of abandonment is **Dismissed**.

Any request for reconsideration should be filed within **TWO MONTHS** of the mailing date of this decision in order to be considered timely. 37 CFR 1.181(f). This time period may not be extended pursuant to 37 CFR 1.136.

This application became abandoned for failure to timely submit the issue and publication fees, as required by the Notice of Allowance and Fee (s) Due which was mailed May 6, 2004. The Notice of Allowance and Fee (s) Due set a three (3) month statutory period for reply. Extensions of time were not available under the provisions of 37 CFR 1.136(a). Accordingly, this application became abandoned on August 7, 2004. A Notice of Abandonment was mailed on March 23, 2005.

Petitioner contends the Notice of Allowance and Fee (s) Due mailed on May 6, 2004 was not received. The showing required to establish the failure to receive an Office communication must include a statement from the practitioner stating that the Office communication was not received by the practitioner and attesting to the fact that a search of the file jacket and docket records indicates that the Office communication was not received. A copy of the docket record where the non-received Office communication would have been entered had it been received and docketed must be attached to and referenced in practitioner's statement. For example, if a three month period for reply was set in the nonreceived Office action, a copy of the docket report showing all replies docketed for a date three months from the mail date of

the nonreceived Office action must be submitted as documentary proof of non-receipt of the Office action. The showing outlined above may not be sufficient if there are circumstances that point to a conclusion that the Office Communication may have been lost after receipt rather than a conclusion that the Office Communication was lost in the mail.

Petitioner has presented a docket report for the dates of July 5-July 25 of 2004. It is further noted petitioner states that the issue fee is docketed for two weeks before the due date. However, since the Notice of Allowance provided a three month period of reply, petitioner needs to provide the docket report for May 6, 2004 until August 6, 2004. It is also noted that a change of correspondence address was received on June 10, 2004. Petitioner should provide a statement that the change of correspondence address did not affect receipt of the Notice of Allowance.

Further correspondence with respect to this matter should be addressed as follows:

By mail:	Mail Stop Petition Commissioner for Patents P.O. Box 1450 Alexandria, VA 22313-1450
By facsimile:	(571) 273-8300
By delivery service: (FedEx, UPS, DHL, etc.)	U.S. Patent and Trademark Office Customer Service Window, Randolph Building 401 Dulany Street Alexandria, VA 22314

Telephone inquiries concerning this matter should be directed to the undersigned at (571) 272-3215.

Charlema R. Grant
Petitions Attorney
Office of Petitions

UNITED STATES PATENT AND TRADEMARK OFFICE

Commissioner for Patents
United States Patent and Trademark Office
P.O. Box 1450
Alexandria, VA 22313-1450
www.uspto.gov

IP Strategies P.C.
12 ½ Wall Street
Suite 1
Asheville NC 28801

COPY MAILED
AUG 1 8 2006
OFFICE OF PETITIONS

In re Application of
Shenoy
Application No. 09/769,446
Filed: January 26, 2001
Title: Driven Equilibrium and Fast-Spin Echo Scanning

ON PETITION

This is a decision on the renewed petition under 37 CFR 1.181 to withdraw the holding of abandonment, filed June 27, 2006.

The petition to withdraw the holding of abandonment is **GRANTED**.

This application became abandoned for failure to timely submit the issue and publication fees, as required by the Notice of Allowance and Fee (s) Due which was mailed May 6, 2004. The Notice of Allowance and Fee (s) Due set a three (3) month statutory period for reply. Extensions of time were not available under the provisions of 37 CFR 1.136(a). Accordingly, this application became abandoned on August 7, 2004. A Notice of Abandonment was mailed on March 23, 2005.

Petitioner contends the Notice of Allowance and Fee (s) Due mailed on May 6, 2004 was not received. Petitioner states a search of the file jacket and docket records confirms the Notice of Allowance was not received. In support of petitioner's contention, a copy of the docket records has been provided.

The Notice of Abandonment is hereby vacated and the holding of abandonment withdrawn

This application is being forwarded to Art Unit 2859 for re-mailing of the Notice of Allowance and the Notice of Allowability to the correspondence address of record. The three month non-extendable time period for reply will be set to run from the mailing date of the new Office Communication.

Telephone inquiries concerning this matter should be directed to the undersigned at (571) 272-3215.

Charlema R. Grant
Petitions Attorney
Office of Petitions

UNITED STATES PATENT AND TRADEMARK OFFICE

Commissioner for Patents
United States Patent and Trademark Office
Washington, D.C. 20231
www.uspto.gov

Paper No. 19

Woodcock Washburn
One Liberty Place – 46th Floor
Philadelphia, PA 19103

COPY MAILED

MAR 2 6 2003

OFFICE OF PETITIONS

In re Application of :
Kruse et al. :
Application No. 09/769,450 : ON PETITION
Filed: January 26, 2001 :
Attorney Docket No. ADOL-0497 :

This is a decision on the petition under 37 CFR 1.137(b), filed March 17, 2003, to revive the above-identified application.

The petition is **GRANTED**.

The above-identified application became abandoned for failure to reply within the meaning of 37 CFR 1.113 in a timely manner in reply to the final Office action mailed July 23, 2002, which set a shortened statutory period for reply of three months. No extensions of time under the provisions of 37 CFR 1.136 have been obtained. Accordingly, the above-identified application became abandoned on October 24, 2002.

Telephone inquiries concerning this decision should be directed to Latrice Bond at (703) 308-6911.

The application file is being forwarded to Technology Center 1617 for processing the Request for Continued Examination under 37 CFR 1.114 filed with the instant petition.

Latrice Bond

Latrice Bond
Paralegal Specialist
Office of Petitions
Office of the Deputy Commissioner
for Patent Examination Policy

Ex. J. Nguyen

SPE RESPONSE FOR CERTIFICATE OF CORRECTION

Paper No.: _____

DATE : 6/4/07

TO SPE OF : ART UNIT 2629

SUBJECT : Request for Certificate of Correction for Appl. No.: 09/769,451 Patent No.: 7138983

Please respond to this request for a certificate of correction within 7 days.

Please review the requested changes/corrections as shown in the **COCIN** document(s) in the IFW application image. No new matter should be introduced, nor should the scope or meaning of the claims be changed.

Please complete the response (see below) and forward the completed response to scanning using document code **COCX**.

Lamonte M. Newsome
Certificates of Correction Branch
703-308-9390 ext. 112

Thank You For Your Assistance

The request for issuing the above-identified correction(s) is hereby:

Note your decision on the appropriate box.

- ☒ **Approved** — **All** changes apply.
- ☐ **Approved in Part** — Specify below which changes **do not** apply.
- ☐ **Denied** — State the reasons for denial below.

Comments: _____

RICHARD HJERPE
SUPERVISORY PATENT EXAMINER
TECHNOLOGY CENTER 2600

SPE — **Art Unit** 2629

SPE RESPONSE FOR CERTIFICATE OF CORRECTION

Paper No.: _____

DATE : 1-30-07

TO SPE OF : ART UNIT 2179

SUBJECT : Request for Certificate of Correction on Patent No.: 7073128 B2 C 09/764468

A response is requested with respect to the accompanying request for a certificate of correction.

Please complete this form and return with file, within **7** days to:
Palm location **7580, Certificates of Correction Branch – South Tower – 9A22**
If response is for an IFW, **return to employee (named below) via PUBSCofC Team in MADRAS.**
With respect to the change(s) requested, correcting Office and/or Applicant's errors, should the patent read as shown in the certificate of correction (COCIN)? No new matter should be introduced, nor should the scope or meaning of the claims be changed.

PTA should the days be 393 days?

Eva James

Thank You For Your Assistance

Please reply A/S/A/P

Certificates of Correction Branch
Tel. No. 703-305-8309
atty want the status

The request for issuing the above-identified correction(s) is hereby:
Note your decision on the appropriate box.

- ☐ **Approved** — **All** changes apply.
- ☐ **Approved in Part** — Specify below which changes **do not** apply.
- ☐ **Denied** — State the reasons for denial below.

Comments:

_____

_____

_____

_____

_____

_____ SPE _____ Art Unit

SPE RESPONSE FOR CERTIFICATE OF CORRECTION

Paper No.: _____

DATE : 1-30-07

TO SPE OF : ART UNIT 2179

SUBJECT : Request for Certificate of Correction on Patent No.: 7073128 B2 (09/764468

A response is requested with respect to the accompanying request for a certificate of correction.

Please complete this form and return with file, within **7** days to:
Palm location **7580, Certificates of Correction Branch – South Tower – 9A22**
If response is for an IFW, **return to employee (named below) via PUBSCofC Team in MADRAS.**
With respect to the change(s) requested, correcting Office and/or Applicant's errors, should the patent read as shown in the certificate of correction (COCIN)? No new matter should be introduced, nor should the scope or meaning of the claims be changed.

PTA should the days be 393 days?

Eva James

Thank You For Your Assistance

Please reply A/S/A/P

Certificates of Correction Branch
Tel. No. 703-305-8309
atty want the status

The request for issuing the above-identified correction(s) is hereby:
Note your decision on the appropriate box.

- ☑ **Approved** — All changes apply.
- ☐ **Approved in Part** — Specify below which changes **do not** apply.
- ☐ **Denied** — State the reasons for denial below.

Comments:

The request does not change the scope of the invention. Please enter.

1/13
7/24/07

SPE

2179
Art Unit

Staple Here Only!

PRINTER'S TRIM LINE

UNITED STATES PATENT AND TRADEMARK OFFICE

CERTIFICATE OF CORRECTION

PATENT NO. : 7,073,128 B2

DATED : July 4, 2006

INVENTOR(S) : Daniel John Lloyd-Jones, et al.

It is certified that error appears in the above-identified patent and that said Letters Patent is hereby corrected as shown below:

COVER PAGE:
(*) Notice: "727 days." should read -- 393 days. --

(56) References Cited, OTHER PUBLICATIONS (page two), "Colloquim" should read -- Colloquium --.

COLUMN 1:
Line 14, "it's" should read -- its --.

COLUMN 3:
Line 15, "**132** Each" should read -- **132**. Each --; and
Line 58, "view Associated" should read -- view. Associated.

COLUMN 4:
Line 37, "Magnified" should read -- Magnifies --.

COLUMN 5:
Line 66, "**428** The" should read -- **428**. The --.

COLUMN 6:
Line 6, ""trough " should read -- "through --; and
Line 11, "second" should read -- seconds --.

COLUMN 7:
Line 52, "sub functions" should read -- sub-functions --.

MAILING ADDRESS OF SENDER:
FITZPATRICK, CELLA, HARPER & SCINTO
30 Rockefeller Plaza
New York, New York 10112-3800
(212) 218-2100 - Telephone
(212) 218-2200 - Facsimile

PATENT NO. 7,073,128 B2

No. of add'l. copies @ 30¢ per page

Form PTO 1050 (Rev. 3-82)
123188 (Form#30)

DEC 12 2006

Staple Here Only!

PRINTER'S TRIM LINE

UNITED STATES PATENT AND TRADEMARK OFFICE

CERTIFICATE OF CORRECTION

PATENT NO. : 7,073,128 B2

DATED : July 4, 2006

INVENTOR(S) : Daniel John Lloyd-Jones, et al.

It is certified that error appears in the above-identified patent and that said Letters Patent is hereby corrected as shown below:

COLUMN 8:

Line 59, "parent only-mode," should read -- parent-only mode, --.

MAILING ADDRESS OF SENDER:

FITZPATRICK, CELLA, HARPER & SCINTO
30 Rockefeller Plaza
New York, New York 10112-3800
(212) 218-2100 - Telephone
(212) 218-2200 - Facsimile

PATENT NO. 7,073,128 B2

No. of add'l. copies @ 30¢ per page

DEC 1 2 2006

Form PTO 1050 (Rev. 3-82)
123188 (Form#30)

UNITED STATES PATENT AND TRADEMARK OFFICE

Commissioner for Patents
United States Patent and Trademark Office
P.O. Box 1450
Alexandria, VA 22313-1450
www.uspto.gov

FINNEGAN, HENDERSON, FARABOW, GARRETT & DUNNER
1300 I STREET, NW
WASHINGTON DC 20005

COPY MAILED

JUN 2 1 2004

OFFICE OF PETITIONS

In re Application of	:	
Gerhard Breipohl et al	:	
Application No. 09/769,487	:	ON PETITION
Filed: January 26, 2001	:	
Attorney Docket No. 02481.1731-00	:	

This is a decision on the petition, filed June 18, 2004, under 37 CFR 1.313(c)(3) to withdraw the above-identified application from issue after payment of the issue fee.

The petition is **GRANTED**.

The above-identified application is withdrawn from issue for express abandonment. See 37 CFR 1.313(c)(3).

The application is hereby withdrawn from issue, and the abandonment is hereby recognized.

Telephone inquiries should be directed to the undersigned at (703) 305-8859.

The application is being forwarded to Files Repository.

Karen Creasy

Karen Creasy
Petitions Examiner
Office of Petitions
Office of the Deputy Commissioner
for Patent Examination Policy

PTO/SB/66 (03-09)
Approved for use through 03/31/2012. OMB 0651-0016
U.S. Patent and Trademark Office: U.S. DEPARTMENT OF COMMERCE
Under the Paperwork Reduction Act of 1995, no persons are required to respond to a collection of information unless it displays valid OMB control number.

PETITION TO ACCEPT UNINTENTIONALLY DELAYED PAYMENT OF MAINTENANCE FEE IN AN EXPIRED PATENT (37 CFR 1.378(c))

Patent Number	Issue Date (YYYY-MM-DD)	Application Number	Filing Date (YYYY-MM-DD)	Docket Number (if applicable)
7035912	2006-04-25	09769501	2001-01-26	40922M0021

CAUTION: Maintenance fee (and surcharge, if any) payment must correctly identify: (1) the patent number and (2) the application number of the actual U.S. application leading to issuance of that patent to ensure the fee(s) is/are associated with the correct patent. 37 CFR 1.366(c) and (d).

SMALL ENTITY
☒ Patentee claims, or has previously claimed, small entity status. See 37 CFR 1.27.

LOSS OF ENTITLEMENT TO SMALL ENTITY STATUS
☐ Patentee is no longer entitled to small entity status. See 37 CFR 1.27(g)

NOT Small Entity		Small Entity	
Fee	Code	Fee	Code
○ 3 ½ year	(1551)	◉ 3 ½ year	(2551)
○ 7 ½ year	(1552)	○ 7 ½ year	(2552)
○ 11 ½ year	(1553)	○ 11 ½ year	(2553)

SURCHARGE
The surcharge required by 37 CFR 1.20(i)(2) (Fee Code 1558) must be paid as a condition of accepting unintentionally delayed payment of the maintenance fee.

MAINTENANCE FEE (37 CFR 1.20(e)-(g))
The appropriate maintenance fee must be submitted with this petition.

STATEMENT
THE UNDERSIGNED CERTIFIES THAT THE DELAY IN PAYMENT OF THE MAINTENANCE FEE TO THIS PATENT WAS UNINTENTIONAL

PETITIONER(S) REQUEST THAT THE DELAYED PAYMENT OF THE MAINTENANCE FEE BE ACCEPTED AND THE PATENT REINSTATED

THIS PORTION MUST BE COMPLETED BY THE SIGNATORY OR SIGNATORIES

37 CFR 1.378(d) states: "Any petition under this section must be signed by an attorney or agent registered to practice before the Patent and Trademark Office, or by the patentee, the assignee, or other party in interest."

I certify, in accordance with 37 CFR 1.4(d)(4) that I am

◉ An attorney or agent registered to practice before the Patent and Trademark Office

○ A sole patentee

○ A joint patentee; I certify that I am authorized to sign this submission on behalf of all the other patentees.

○ A joint patentee; all of whom are signing this e-petition

○ The assignee of record of the entire interest

Patent Practitioner			
A signature of the applicant or representative is required in accordance with 37 CFR 1.33 and 10.18. Please see 37 CFR 1.4(d) for the form of the signature			
Signature	/Gregory Scott Smith/	Date (YYYY-MM-DD)	2010-07-16
Name	Gregory Scott Smith	Registration Number	40819

This collection of information is required by 37 CFR 1.378(c). The information is required to obtain or retain a benefit by the public which is to file (and by the USPTO to process) an application. Confidentiality is governed by 35 U.S.C. 122 and 37 CFR 1.11 and 1.14. This collection is estimated to take 1 hour to complete, including gathering, preparing, and submitting the completed application form to the USPTO. Time will vary depending upon the individual case. Any comments on the amount of time you require to complete this form and/or suggestions for reducing this burden, should be sent to the Chief Information Officer, U.S. Patent and Trademark Office, U.S. Department of Commerce, P.O. Box 1450, Alexandria, VA 22313-1450. DO NOT SEND FEES OR COMPLETED FORMS TO THIS ADDRESS. **This form can only be used when in conjunction with EFS-Web. If this form is mailed to the USPTO, it may cause delays in reinstating the patent.**

Privacy Act Statement

The Privacy Act of 1974 (P.L. 93-579) requires that you be given certain information in connection with your submission of the attached form related to a patent application or patent. Accordingly, pursuant to the requirements of the Act, please be advised that: (1) the general authority for the collection of this information is 35 U.S.C. 2(b)(2); (2) furnishing of the information solicited is voluntary; and (3) the principal purpose for which the information is used by the U.S. Patent and Trademark Office is to process and/or examine your submission related to a patent application or patent. If you do not furnish the requested information, the U.S. Patent and Trademark Office may not be able to process and/or examine your submission, which may result in termination of proceedings or abandonment of the application or expiration of the patent.

The information provided by you in this form will be subject to the following routine uses:

1. The information on this form will be treated confidentially to the extent allowed under the Freedom of Information Act (5 U.S.C. 552) and the Privacy Act (5 U.S.C. 552a). Records from this system of records may be disclosed to the Department of Justice to determine whether the Freedom of Information Act requires disclosure of these records.

2. A record from this system of records may be disclosed, as a routine use, in the course of presenting evidence to a court, magistrate, or administrative tribunal, including disclosures to opposing counsel in the course of settlement negotiations.

3. A record in this system of records may be disclosed, as a routine use, to a Member of Congress submitting a request involving an individual, to whom the record pertains, when the individual has requested assistance from the Member with respect to the subject matter of the record.

4. A record in this system of records may be disclosed, as a routine use, to a contractor of the Agency having need for the information in order to perform a contract. Recipients of information shall be required to comply with the requirements of the Privacy Act of 1974, as amended, pursuant to 5 U.S.C. 552a(m).

5. A record related to an International Application filed under the Patent Cooperation Treaty in this system of records may be disclosed, as a routine use, to the International Bureau of the World Intellectual Property Organization, pursuant to the Patent Cooperation Treaty.

6. A record in this system of records may be disclosed, as a routine use, to another federal agency for purposes of National Security review (35 U.S.C. 181) and for review pursuant to the Atomic Energy Act (42 U.S.C. 218(c)).

7. A record from this system of records may be disclosed, as a routine use, to the Administrator, General Services, or his/her designee, during an inspection of records conducted by GSA as part of that agency's responsibility to recommend improvements in records management practices and programs, under authority of 44 U.S.C. 2904 and 2906. Such disclosure shall be made in accordance with the GSA regulations governing inspection of records for this purpose, and any other relevant (i.e., GSA or Commerce) directive. Such disclosure shall not be used to make determinations about individuals.

8. A record from this system of records may be disclosed, as a routine use, to the public after either publication of the application pursuant to 35 U.S.C. 122(b) or issuance of a patent pursuant to 35 U.S.C. 151. Further, a record may be disclosed, subject to the limitations of 37 CFR 1.14, as a routine use, to the public if the record was filed in an application which became abandoned or in which the proceedings were terminated and which application is referenced by either a published application, an application open to public inspections or an issued patent.

9. A record from this system of records may be disclosed, as a routine use, to a Federal, State, or local law enforcement agency, if the USPTO becomes aware of a violation or potential violation of law or regulation.

UNITED STATES PATENT AND TRADEMARK OFFICE

Commissioner for Patents
United States Patent and Trademark Office
P.O. Box 1450
Alexandria, VA 22313-1450
www.uspto.gov

In re Patent No. 7035912
Issue Date: April 25,2006
Application No. 09769501
Filed: January 26,2001
Attorney Docket No. 40922M0021

:
:DECISION GRANTING PETITION
:UNDER 37 CFR 1.378(c)
:

This is a decision on the electronic petition, filed July 16,2010 ,under 37 CFR 1.378(c) to accept the unintentionally delayed payment of the 3.5 year maintenance fee for the above-identified patent.

The petition is **GRANTED**.

The maintenance fee is accepted, and the above-identified patent reinstated as of July 16,2010 .
This decision also constitutes notice that the fee has been accepted. An electronic copy of the petition and this decision has been created as an entry in the Image File Wrapper. Nevertheless, petitioner should print and retain an independent copy.

Telephone inquiries related to this electronic decision should be directed to the Electronic Business Center at 1-866-217-9197.

UNITED STATES PATENT AND TRADEMARK OFFICE

Commissioner for Patents
United States Patent and Trademark Office
P.O. Box 1450
Alexandria, VA 22313-1450
www.uspto.gov

JJGJr : 01-08

KAPLAN GILMAN
GIBSON & DERNIER L.L.P.
900 ROUTE 9 NORTH
WOODBRIDGE NJ 07095

COPY MAILED

JAN 22 2008

OFFICE OF PETITIONS

In re Application of	:	
Penzias, et al.	:	
Application No. 09/769,606	:	DECISION
Filed: 25 January, 2001	:	
Attorney Docket No. 300/6	:	

This is a decision on the petition filed on 16 February, 2007, to revive an application under 37 C.F.R. §1.137(b) as having been abandoned due to intentional delay.

The Office regrets the delay in addressing the instant matter, however, the application was presented to the Office of Petitions only at this writing.

The petition under 37 C.F.R. §1.137(b) is **GRANTED**.

BACKGROUND

The record reflects that:

- Petitioner failed to reply timely and properly to the non-final Office action mailed on 14 July, 2006, with reply due absent extension of time on or before 14 October, 2006;[1]

- the application went abandoned by operation of law after midnight 14 October, 2006;

[1] For more than a century, punctuality and due diligence, equally with good faith, have been deemed essential requisites to the success of those who seek to obtain the special privileges of the patent law, and they are demanded in the interest of the public and for the protection of rival inventors. See: Porter v. Louden, 7 App.D.C. 64 (C.A.D.C. 1895), citing Wollensak v. Sargent, 151 U.S. 221, 228, 38 L. Ed. 137, 14 S. Ct. 291 (1894). An invention benefits no one unless it is made public, and the rule of diligence should be so applied as to encourage reasonable promptness in conferring this benefit upon the public. Automatic Electric Co. v. Dyson, 52 App. D.C. 82; 281 F. 586 (C.A.D.C. 1922). Generally, 35 U.S.C. §6; 37 C.F.R.§§1.181, 182, 183.

- it does not appear that the Office mailed the Notice of Abandonment before the instant petition was filed;

- on 16 February, 2007, Petitioner filed the petition under 37 C.F.R. §1.137(b) with fee, with, *inter alia*, a reply in the form of an amendment, and the statement of unintentional delay.

It is noted that Petitioner filed with the petition a request and fee authorization for extension of time. As Petitioner later suggested in his 23 February, 2007, filing (in which he requested refund of that fee), no request/fee for extension of time was required on filing of the petition. However, Petitioner's request that his credit card payment be refunded to his deposit account cannot be accommodated because Office practice requires, generally, refunds to be in the form of the originating payments—in this case, to a credit card account (see: 37 C.F.R. §1.26(a).) Instruction to that effect has been sent with this decision, however, if Petitioner later concludes that the refund has not been completed, Petitioner should made a request of the Office of Finance and include therewith a copy of this decision.

The availability of applications and application papers online to applicants/practitioners who diligently associate their Customer Number with the respective application(s) now provides an applicant/practitioner on-demand information as to events/transactions in an application. Thus, now if one wishes to know the progress in and/or status of an application or the accuracy of the data therein, one need only look at the file online.

Out of an abundance of caution, Petitioners always are reminded that those registered to practice *and* all others who make representations before the Office must inquire into the underlying facts of representations made to the Office and support averments with the appropriate documentation–since all owe to the Office the continuing duty to disclose.[2]

STATUTES, REGULATIONS AND ANALYSIS

Congress has authorized the Commissioner to "revive an application if the delay is shown to the satisfaction of the Commissioner to have been "unavoidable." 35 U.S.C. §133 (1994).[3]

---

[2] See supplement of 17 June, 1999. The Patent and Trademark Office is relying on petitioner's duty of candor and good faith and accepting a statement made by Petitioner. See Changes to Patent Practice and Procedure, 62 Fed. Reg. at 53160 and 53178, 1203 Off. Gaz. Pat. Office at 88 and 103 (responses to comments 64 and 109)(applicant obligated under 37 C.F.R. §10.18 to inquire into the underlying facts and circumstances when providing statements to the Patent and Trademark Office).

See specifically, the regulations at 37 C.F.R. §10.18.

[3] 35 U.S.C. §133 provides:
35 U.S.C. §133 Time for prosecuting application.
Upon failure of the applicant to prosecute the application within six months after any action therein, of which notice has been given or mailed to the applicant, or within such shorter time, not less than thirty days, as fixed by the Commissioner in such action, the application shall be regarded as abandoned by the parties thereto, unless it be shown to the satisfaction of the Commissioner that such delay was unavoidable.

The regulations at 37 C.F.R. §1.137(a) and (b) set forth the requirements for a petitioner to revive a previously unavoidably or unintentionally, respectively, abandoned application under this congressional grant of authority.

The language of 35 U.S.C. §133 and 37 C.F.R. §1.137(a) is clear, unambiguous, and without qualification: the delay in tendering the reply to the outstanding Office action, as well as filing the first petition seeking revival, must have been unavoidable for the reply now to be accepted on petition.[4]

Delays in responding properly raise the question whether delays are unavoidable.[5] Where there is a question whether the delay was unavoidable, Petitioners must meet the burden of establishing that the delay was unavoidable within the meaning of 35 U.S.C. §133 and 37 C.F.R. §1.137(a).[6]

And the Petitioner must be diligent in attending to the matter.[7] Failure to do so does not constitute the care required under Pratt, and so cannot satisfy the test for diligence and due care.

(By contrast, unintentional delays are those that do not satisfy the very strict statutory and regulatory requirements of unavoidable delay, and also, by definition, are not intentional.[8]))

As to the Allegations
of Unintentional Delay

The requirements for a grantable petition under 37 C.F.R. §1.137(b) are the petition and fee, a statement/showing of unintentional delay, a proper reply, and–where appropriate—a terminal disclaimer and fee.

It appears that Petitioner has satisfied the requirements of the regulation.

---

4 Therefore, by example, an unavoidable delay in the payment of the Filing Fee might occur if a reply is shipped by the US Postal Service, but due to catastrophic accident, the delivery is not made.

5 See: *Changes to Patent Practice and Procedure*; *Final Rule Notice*, 62 *Fed. Reg.* at 53158-59 (October 10, 1997), 1203 *Off. Gaz. Pat. Office* at 86-87 (October 21, 1997).

6 See: In re Application of G, 11 USPQ2d 1378, 1380 (Comm'r Pats. 1989).

7 See: Diligence in Filing Petitions to Revive and Petitions to Withdraw the Holding of Abandonment, 1124 Off. Gaz. Pat. Office 33 (March 19, 1991). It was and is Petitioner's burden to exercise diligence in seeking either to have the holding of abandonment withdrawn or the application revived. See 1124 Off. Gaz. Pat. Office supra.

8 Therefore, by example, an unintentional delay in the reply might occur if the reply and transmittal form are to be prepared for shipment by the US Postal Service, but other pressing matters distract one's attention and the mail is not timely deposited for shipment.

CONCLUSION

The instant petition under 37 C.F.R. §1.137(b) is **granted**.

The instant application is released to Technology Center AU 2136 for further processing in due course.

While telephone inquiries regarding this decision may be directed to the undersigned at (571) 272-3214, it is noted that all practice before the Office is in writing (see: 37 C.F.R. §1.2[9]) and the proper authority for action on any matter in this regard are the statutes (35 U.S.C.), regulations (37 C.F.R.) and the commentary on policy (MPEP). Therefore, no telephone discussion may be controlling or considered authority for Petitioner's action(s).

John J. Gillon, Jr.
Senior Attorney
Office of Petitions

---

[9] The regulations at 37 C.F.R. §1.2 provide:

§1.2 Business to be transacted in writing.

All business with the Patent and Trademark Office should be transacted in writing. The personal attendance of applicants or their attorneys or agents at the Patent and Trademark Office is unnecessary. The action of the Patent and Trademark Office will be based exclusively on the written record in the Office. No attention will be paid to any alleged oral promise, stipulation, or understanding in relation to which there is disagreement or doubt.

UNITED STATES PATENT AND TRADEMARK OFFICE

Commissioner for Patents
United States Patent and Trademark Office
P.O. Box 1450
Alexandria, VA 22313-1450
www.uspto.gov

GIBSON & DERNIER L.L.P.
900 ROUTE 9 NORTH
SUITE 504
WOODBRIDGE, NJ 07095

COPY MAILED

JAN 04 2010

In re Application of	:	
Penzias et al.	:	DECISION ON PETITION
Application No. 09/769,606	:	TO WITHDRAW
Filed: January 25, 2001	:	FROM RECORD
Attorney Docket No. 300-005	:	

This is a decision on the Request to Withdraw as attorney or agent of record under 37 C.F.R. § 1.36(b), filed November 2, 2009.

The request is **NOT APPROVED** because it is moot.

A review of the file record indicates that on December 30, 2009 the power of attorney to Gibson & Dernier L.L.P. was revoked by the assignee of the patent application. Accordingly, the request to withdraw under 37 C.F.R. § 1.36(b) is moot.

All future communications from the Office will be directed to the below-listed address until otherwise notified by applicant.

Telephone inquires concerning this decision should be directed to the undersigned at 571-272- 7751. All other inquires concerning either the examination or status of the application should be directed to the Technology Center.

Joan Olszewski
Petitions Examiner
Office of Petitions

cc: Kaplan Gilman & Pergament LLP
1480 Route 9 North
Woodbridge NJ 07095

UNITED STATES PATENT AND TRADEMARK OFFICE

COMMISSIONER FOR PATENTS
UNITED STATES PATENT AND TRADEMARK OFFICE
P.O. BOX 1450
ALEXANDRIA, VA 22313-1450
www.uspto.gov

NOV 13 2003

VP
PAPER NO. ___

In re Application of
George B. Diamond et al.
Serial Number: 09/769,628
Filed: January 25, 2001
For: APPARATUS HAVING A SPLASH FOR PREVENTING SPLASHING

PETITION UNDER M.P.E.P.708.02 IV

This is in response to the petition filed August 8, 2003, requesting that the above-identified application be granted Special Status under Section 708.02 IV of the MPEP and 37 CFR 1.102(c) (**no fee required**).

The request for Special Status considered under Section 708.02 IV of the MPEP is granted because criteria under 37 CFR 1.102(c) has been met.

Accordingly the petition is **GRANTED.**

Marian C. Knode

Marian C. Knode, Special Programs Examiner
Technology Center 1700
Chemical and Materials Engineering

OSTERLENK, FABER, GERB & SOFFEN, LLP
1180 Avenue of the Americas
New York, New York 10036-8403

UNITED STATES PATENT AND TRADEMARK OFFICE

Commissioner for Patents
United States Patent and Trademark Office
Washington, D.C. 20231
www.uspto.gov

Paper No. 5

GEORGE B LEAVELL
BLAKELY SOKOLOFF TAYLOR & ZAFMAN
12400 WILSHIRE BLVD
SEVENTH FLOOR
LOS ANGELES CA 90025-1026

COPY MAILED

AUG 6 2001

OFFICE OF PETITIONS
A/C PATENTS

In re Application of
Rossmann, et al.
Application No. 09/769,632
Filed: January 24, 2001
Attorney Docket No. 3399P043

DECISION ON PETITION

This is a decision on the Petition Under 37 CFR 1.53(e), filed May 8, 2001, to accord the above-identified application a filing date of January 24, 2001.

Application papers in the above-identified application were filed on January 24, 2001. However, on March 8, 2001, the Initial Patent Examination Division mailed a "Notice of Incomplete Nonprovisional Application," notifying applicant that the application papers had not been accorded a filing date because the application was deposited without drawings[1].

Petitioner asserts that the application was in fact filed with drawings, and that no further deposit of drawings is necessary to be entitled to a filing date. In support thereof, petitioner submitted a postcard receipt identifying this application, itemizing "7 sheets of drawings" as enclosed, bearing a United States Patent and Trademark Office date-stamp of January 24, 2001, and lacking any notation of non-receipt of any item listed.

A postcard receipt which itemizes and properly identifies the items which are being filed serves as *prima facie* evidence of receipt in the Office of all items listed thereon on the date stamped thereon by the Office. See MPEP 503.

In view thereof, the petition is **GRANTED**.

Given the basis for granting the petition, the petition fee has been refunded to counsel's Deposit Account, as requested.

The application is being forwarded to the Office of Initial Patent Examination (OIPE) for further processing with a filing date of January 24, 2001, using the application papers received in the Office on that date and 7 sheets of drawings resupplied on petition filed May 8, 2001. Applicant will receive appropriate notifications regarding the fees owed, if any, and other information in due course from OIPE.

---

[1] See 35 U.S.C. 111(a)(4).

Telephone inquiries related to this decision should be directed to Petitions Attorney Cliff Congo at 703-305-0272.

Beverly M. Flanagan
Supervisory Petitions Examiner
Office of Petitions
Office of the Deputy Commissioner
for Patent Examination Policy

UNITED STATES PATENT AND TRADEMARK OFFICE

Commissioner for Patents
United States Patent and Trademark Office
P.O. Box 1450
Alexandria, VA 22313-1450
www.uspto.gov

Paper No. 10

ZILKA-KOTAB, PC
P.O. BOX 721120
SAN JOSE, CA 95172-1120

COPY MAILED

MAR 1 5 2005

OFFICE OF PETITIONS

In re Application of
Damiba, Bertrand A.
Application No. 09/769,638
Filed: January 24, 2001
Attorney Docket No. BVOCP005

ON PETITION

This is a decision on the petition under 37 C.F.R. § 1.137(b), filed February 1, 2005, to revive the above-identified application.

The petition is **GRANTED.**

This application became abandoned for failure to timely reply to the non-final Office action mailed September 5, 2003. No extensions of time under the provisions of 37 CFR 1.136(a) were obtained. Accordingly, this application became abandoned on December 6, 2003. A Notice of Abandonment was mailed April 20, 2004.

Petitioner has met the requirements to revive the above-identified application pursuant to 37 CFR 1.137(b).

The file is now being forwarded to Technology Center 2100 for further examination on the merits.

Telephone inquiries regarding this decision should be directed to the undersigned at (571) 272-3282.

Liana Chase
Petitions Examiner
Office of Petitions
Office of the Deputy Commissioner
for Patent Examination Policy

UNITED STATES PATENT AND TRADEMARK OFFICE

COMMISSIONER FOR PATENTS
UNITED STATES PATENT AND TRADEMARK OFFICE
WASHINGTON, DC 20231
www.uspto.gov

Paper No. 10

MAIL

JAN 14 2003

DIRECTOR OFFICE
TECHNOLOGY CENTER 2600

SILICON VALLEY INTELLECTUAL PROPERTY GROUP
P.O. BOX 721120
SAN JOSE CA 95172-1120

In re Application of :
Michael Migdol et al :
Application No. 09/769,639 :
Filed: January 24, 2001 :
For: **SYSTEM, METHOD AND COMPUTER PROGRAM PRODUCT FOR A VOICE-ENABLED UNIVERSAL FLIGHT INFORMATION FINDER** :

DECISION ON REQUEST TO WITHDRAW AS ATTORNEY

This is a decision on the request to withdraw as attorney/agent of record filed on November 6, 2002.

A grantable request to withdraw as attorney/agent of record must:
(1) indicate the present mailing address of the attorney(s)/agent(s) who seek(s) to withdraw, and
(2) be signed by each attorney/agent seeking to withdraw or clearly be signed on their behalf, and
(3) be *approved* at least thirty (30) days prior to the maximum extendable period for response to any outstanding Office Action, and
(4) indicate the address to which future correspondence should be mailed.

Petitioner has met all of the above. Accordingly, the request is **GRANTED**.

Kevin J. Zilka and Dominic M. Kotab are removed from record.

All future communications from the Office will be directed to the address listed below until otherwise notified by applicant. Applicant is reminded of the obligation to promptly notify the Patent and Trademark Office of any change in correspondence address to ensure receipt of all communications from the Office.

Krista Zele
Special Program Examiner
Technology Center 2600
Communications
(703) 305-4701

cc: Attn: Megan Carroll
BeVocal, Inc.
685 Clyde Avenue
Mountain View, CA 94043-2213

UNITED STATES PATENT AND TRADEMARK OFFICE

Commissioner for Patents
United States Patent and Trademark Office
P.O. Box 1450
Alexandria, VA 22313-1450
www.uspto.gov

Paper No. 15

MEGAN CARROLL
BEVOCAL, INC.
685 CLYDE AVENUE
MOUNTAIN VIEW, CA 94043-2213

COPY MAILED

NOV 19 2004

OFFICE OF PETITIONS

In re Application of	:	
Migdol et al.	:	
Application No. 09/769,639	:	ON PETITION
Filed: January 24, 2001	:	
Attorney Docket No. BVOCP008	:	

This is a decision on the petition under 37 C.F.R. § 1.137(b), filed September 27, 2004, to revive the above-identified application.

The petition is **GRANTED.**

This application became abandoned for failure to timely reply to the non-final Office action mailed November 17, 2003. No extensions of time under the provisions of 37 CFR 1.136(a) were obtained. Accordingly, this application became abandoned on February 18, 2004. A Notice of Abandonment was mailed June 22, 2004.

Petitioner has met the requirements to revive the above-identified application pursuant to 37 CFR 1.137(b).

The file does not indicate a change of address has been submitted, although the address given on the petition differs from the address of record. If appropriate, a request to change the address of record should be filed. A courtesy copy of this decision is being mailed to the address given on the petition; however, the Office will mail all future correspondence solely to the address of record.

The file is now being forwarded to Technology Center 2600 for further examination on the merits.

Telephone inquiries regarding this decision should be directed to the undersigned at (571) 272-3282.

Liana Chase

Liana Chase
Petitions Examiner
Office of Petitions
Office of the Deputy Commissioner
for Patent Examination Policy

cc: KEVIN J. ZILKA
ZILKA-KOTAB, PC
P.O. BOX 721120
SAN JOSE, CA 95172-1120

UNITED STATES PATENT AND TRADEMARK OFFICE

COMMISSIONER FOR PATENTS
UNITED STATES PATENT AND TRADEMARK OFFICE
WASHINGTON, DC 20231
www.uspto.gov

Paper No. 6

MAIL

NOV 2 0 2002

DIRECTOR OFFICE
TECHNOLOGY CENTER 2600

SILICON VALLEY INTELLECTUAL PROPERTY GROUP
P.O. BOX 721120
SAN JOSE CA 95172-1120

In re Application Serial No.:
09/769,665

ON REQUEST TO
WITHDRAW AS ATTORNEY

The Request to Withdraw as Attorney is **GRANTED**.

Further communications will be directed to the address listed below until such a time as applicant properly notifies the Patent and Trademark Office of a change of address. This address has been provided by the withdrawing attorney(s).

Kenneth A. Wieder
Special Program Examiner
Technology Center 2600
Communications

cc: BeVocal, Inc.
685 Clyde Avenue
Mountain View, CA 94043-2213

UNITED STATES PATENT AND TRADEMARK OFFICE

Commissioner for Patents
United States Patent and Trademark Office
P.O. Box 1450
Alexandria, VA 22313-1450
www.uspto.gov

Paper No. 15

SILICON VALLEY IP GROUP, PC
P O BOX 721120
SAN JOSE, CA 95172-1120

COPY MAILED

NOV 3 0 2004

OFFICE OF PETITIONS

In re Application of
Mikael Berner et al
Application No. 09/769,665
Filed: January 24, 2001
Attorney Docket No. BVOCP009

DECISION GRANTING PETITION
UNDER 37 CFR 1.137(b)

This is a decision on the petition under 37 CFR 1.137(b), filed July 13, 2004, to revive the above-identified application.

The petition is **GRANTED**.

The above-identified application became abandoned for failure to reply in a timely manner to the nonfinal Office action mailed March 20, 2003, which set a shortened statutory period for reply of three (3) months. No extensions of time under the provisions of 37 CFR 1.136(a) were obtained. Accordingly, the above-identified application became abandoned on June 21, 2003.

The petition satisfies the conditions for revival pursuant to the provisions of 37 CFR 1.137(b) in that (1) the reply in the form of an amendment; (2) the petition fee; and (3) the required statement of unintentional delay have been received. Accordingly, the reply to the nonfinal Office action of March 20, 2003 is accepted as having been unintentionally delayed.

Telephone inquiries concerning this decision should be directed to the undersigned at (571) 272-3218.

The application file is being forwarded to Technology Center AU 2654 for appropriate action on the amendment filed July 13, 2004, the Information Disclosure Statement filed on July 19, 2004, and on the petition to correct inventorship under 37 CFR 1.48, filed on August 9, 2004.

Frances Hicks

Frances Hicks
Petitions Examiner
Office of Petitions
Office of the Deputy Commissioner
for Patent Examination Policy

UNITED STATES PATENT AND TRADEMARK OFFICE

COMMISSIONER FOR PATENTS
UNITED STATES PATENT AND TRADEMARK OFFICE
P.O. BOX 1450
ALEXANDRIA, VA 22313-1450
www.uspto.gov

Paper No. 23

Hunton & Williams
Laurence H. Posorske
1900 K. Street, NW
Washington, DC 20006-1109

COPY MAILED
MAR 22 2004
OFFICE OF PETITIONS

In re Application of :
Richard W. F. Le Page et al. :
Application No. 09/769,744 : ON PETITION
Filed: January 26, 2001 :
Attorney Docket No.62785.00004 :

This is a decision on the petition under 37 CFR 1.137(b), filed February 27, 2004, to revive the above-identified application.

The petition is Granted.

The above-identified application became abandoned for failure to reply in a timely manner to the Notice of Non-Responsive Amendment filed February 28, 2003, which set a period for reply of (1) One Month or (30) days from the mailing date of the Notice. No extensions of time have been submitted. Accordingly, the application became abandoned on March 29, 2003.

The application file does not indicate a change of address has been filed in this case, although the address given on a petition differs slightly from the address of record. If appropriate, a change of address should be filed in this case in accordance with MPEP 601.03. A courtesy copy of this decision is being mailed to the address given on the petition. However, all future correspondence will be directed solely to the address of record.

The application file is being forwarded to Technology Center 1645 for further processing.

Telephone inquiries concerning this decision should be directed to Latrice Bond at (703) 308-6911.

Latrice Bond

Latrice Bond
Paralegal Specialist
Office of Petitions
Office of the Deputy Commissioner
for Patent Examination Policy

cc: David A. Kelly
1900 K. Street, NW
Suite 1200
Washington, DC 20006-1109

UNITED STATES PATENT AND TRADEMARK OFFICE

Commissioner for Patents
United States Patent and Trademark Office
P.O. Box 1450
Alexandria, VA 22313-1450
www.uspto.gov

FINNEGAN HENDERSON FARABOW
GARRETT & DUNNER LLP
901 NEW YORK AVE NW
WASHINGTON DC 20001-4413

COPY MAILED

NOV 0 8 2005

OFFICE OF PETITIONS

In re Application David H. Mowry Application No. 09/769,746 Filed: January 25, 2001 Atty Docket No. 07883.0106	DECISION ON APPLICATION FOR PATENT TERM ADJUSTMENT

This is a decision on the "REQUEST FOR RECONSIDERATION OF PATENT TERM ADJUSTMENT UNDER 37 C.F.R. §1.705(b)," filed August 30, 2005. Applicants requests that the initial determination of patent term adjustment under 35 U.S.C. 154(b) be corrected from five hundred sixteen (516) days to five hundred forty-five (545) days.

The application for patent term adjustment is **DISMISSED**.

On June 2, 2005, the Office mailed the Determination of Patent Term Adjustment under 35 U.S.C. 154(b) in the above identified application. The Notice stated that the patent term adjustment (PTA) to date is five hundred sixteen (516) days. On August 30, 2005, Applicant timely[1] submitted an application for patent term adjustment, asserting that the correct number of days of PTA at the time of the mailing of the Notice of Allowance is five hundred forty-five (545) days.

---

[1] Applicant filed the instant application for patent term adjustment together with the payment of the issue fee.

Applicant specifically states that the patent issuing from the application is not subject to a terminal disclaimer.

The Office initially determined a patent term adjustment of five hundred sixteen (516) days based on an adjustment for PTO delay of five hundred seventy-four (574) days pursuant to 35 U.S.C. 154(b)(1)(A)(i) and 37 C.F.R. § 1.703(a)(1), reduced by applicants' delays of twenty-nine (29) days pursuant to 35 U.S.C. 154(b)(2)(C)(i) and 37 C.F.R. § 1.704(b) on February 18, 2004, and twenty-nine (29) days pursuant to 35 U.S.C. 154(b)(2)(C)(i) and 37 C.F.R. § 1.704(b) on December 9, 2004. The PTO delay of 574 days and applicant's first delay of 29 days have been reviewed and found to be correct. The second adjustment of 29 days is at issue.

The Office mailed a final Office action on August 10, 2004. Applicants filed a reply on November 4, 2004. However, the reply was not in compliance with 37 C.F.R. § 1.113(c). Accordingly, the Office mailed an Advisory Action on November 30, 2004, indicating that the reply would not be entered. Applicant filed a Notice of Appeal on December 9, 2004, and pursuant to 37 C.F.R. § 1.704(b), was assessed applicant delay of twenty-nine (29) days.

It is the applicant's responsibility to take the necessary action in an application under a final Office action to provide a complete reply under 37 C.F.R. § 1.113. An Advisory Action is not a "notice or action by the Office making any rejectin, objection, argument, or other request". 37 C.F.R. § 1.704(b). The Advisory Action indicated that the period for reponse would continue to run from the mailing date of the final Office action. Accordingly, the adjustment of twenty-nine (29) days was correct.

The correct determination of patent term adjustment at the time of the mailing of the Notice of Allowance is **five hundred sixteen (516)** (574 days of PTO delay, reduced by 58 (29+29) days of applicant delay).

The Office acknowledges submission of the $200.00 fee set forth in 37 C.F.R. § 1.18(e).

The application file is being forwarded to the Office of Patent Publication to complete the issuance process for the patent.

Telephone inquiries specific to this matter should be directed to Cliff Congo, Petitions Attorney, at (571)272-3207.

Karin Ferriter
Senior Legal Advisor
Office of Patent Legal Administration
Office of Deputy Commissioner
for Patent Examination Policy

UNITED STATES PATENT AND TRADEMARK OFFICE

COMMISSIONER FOR PATENTS
UNITED STATES PATENT AND TRADEMARK OFFICE
P.O. BOX 1450
ALEXANDRIA, VA 22313-1450
www.uspto.gov

OLIFF & BERRIDGE, PLC
P.O. BOX 19928
ALEXANDRIA, VA 22320

COPY MAILED
MAY 1 3 2004
OFFICE OF PETITIONS
ON PETITION

In re Application of
Yoshihiro Tsuchiya, et al. :
Application No. 09/769,760 :
Filed: January 26, 2001 :
Attorney Docket No. 108337 :

This is a decision on the petition under 37 CFR 1.313(c)(2) to withdraw the above-identified application from issue after payment of the issue fee, filed May 11, 2004.

The petition is **GRANTED**.

The above-identified application is withdrawn from issue for consideration of a submission under 37 CFR 1.114 (request for continued examination). See 37 CFR 1.313(c)(2).

Petitioner is advised that the issue fee paid, December 3, 2003, in the above-identified application cannot be refunded. If, however, the above-identified application is again allowed, petitioner may request that it be applied towards the issue fee required by the new Notice of Allowance. [1]

Telephone inquiries relating to this decision should be directed to the undersigned at (703) 305-9220.

The application is being forwarded to Technology Center 2653 for further processing of the request for continued examination under 37 CFR 1.114.

Sherry D. Brinkley
Petitions Examiner
Office of Petitions
Office of the Deputy Commissioner
for Patent Examination Policy

[1]The request to apply the issue fee to the new Notice may be satisfied by completing and returning the new Issue Fee Transmittal Form PTOL-85(b), which includes the following language thereon: "Commissioner for Patents is requested to apply the Issue Fee and Publication Fee (if any) or re-apply any previously paid issue fee to the application identified above." Petitioner is advised that, whether a fee is indicated as being due or not, the Issue Fee Transmittal Form **must** be completed and timely submitted to avoid abandonment. Note the language in bold text on the first page of the Notice of Allowance and Fee(s) Due (PTOL-85).

UNITED STATES PATENT AND TRADEMARK OFFICE

Commissioner for Patents
United States Patent and Trademark Office
P.O. Box 1450
Alexandria, VA 22313-1450
www.uspto.gov

MICHAEL A. CANTOR, ESQ.
CANTOR COLBURN LLP
55 GRIFFIN ROAD SOUTH
BLOOMFIELD, CT 06002

COPY MAILED

MAR 17 2009

OFFICE OF PETITIONS

In re Application of	:	
Norbert Miller	:	
Application No. 09/769,827	:	DECISION ON PETITION
Filed: January 24, 2001	:	
Atty Docket No. SWR-0038	:	

This is a decision on the petition under the unintentional provisions of 37 CFR 1.137(b), filed January 12, 2009, to revive the above-identified application.

The file does not indicate a change of address has been submitted, although the address given on the petition differs from the address of record. If appropriate, a change of address should be filed in accordance with MPEP 601.03. A courtesy copy of this decision is being mailed to the address given on the petition; however, the Office will mail all future correspondence solely to the address of record.

The petition is **DISMISSED.**

Any request for reconsideration of this decision must be submitted within TWO (2) MONTHS from the mail date of this decision. Extensions of time under 37 CFR 1.136(a) are permitted. The reconsideration request should include a cover letter entitled "Renewed Petition under 37 CFR 1.137(b)." This is **not** a final agency action within the meaning of 5 U.S.C. § 704.

The application became abandoned for failure to reply in a timely manner to the non-final Office action mailed May 4, 2004, which set a shortened statutory period for reply of three (3) months. No extension of time under the provisions of 37 CFR 1.136(a) was obtained. Accordingly, the application became abandoned on August 5, 2004.

A grantable petition under 37 CFR 1.137(b) must be accompanied by: (1) the required reply, unless previously filed; (2) the petition fee as set forth in 37 CFR 1.17(m); (3) a statement that the entire delay in filing the required reply from the due date for the reply until the filing of a grantable petition pursuant to 37 CFR 1.137(b) was unintentional; and (4) any terminal disclaimer (and fee as set forth in 37 CFR 1.20(d)) required by 37 CFR 1.137(d). Where there is a question as to whether either the abandonment or the delay in filing a petition under 37 CFR 1.137 was unintentional, the Director may require additional information. *See* MPEP 711.03(c)(II)(C) and (D). The instant petition lacks item (3).

There are three periods to be considered during the evaluation of a petition under 37 CFR 1.137(b):

(1) the delay in reply that originally resulted in the abandonment;

(2) the delay in filing an initial petition pursuant to 37 CFR 1.137(b) to revive the application; and

(3) the delay in filing a grantable petition pursuant to 37 CFR 1.137(b) to revive the application.

Currently, the delay has not been shown to the satisfaction of the Director to be unintentional for periods (1) and (2).

<u>As to Period (1):</u>

The patent statute at 35 U.S.C. § 41(a)(7) authorizes the Director to revive an "unintentionally abandoned application." The legislative history of Public Law 97-247 reveals that the purpose of 35 U.S.C. § 41(a)(7) is to permit the Office to have more discretion than in 35 U.S.C. §§ 133 or 151 to revive abandoned applications in appropriate circumstances, but places a limit on this discretion, stating that "[u]nder this section a petition accompanied by either a fee of $500 or a fee of $50 **would not be granted where the abandonment** or the failure to pay the fee for issuing the patent **was intentional** as opposed to being unintentional or unavoidable." [emphasis added]. <u>See</u> H.R. Rep. No. 542, 97th Cong., 2d Sess. 6-7 (1982), *reprinted in* 1982 U.S.C.C.A.N. 770-71. The revival of an intentionally abandoned application is antithetical to the meaning and intent of the statute and regulation.

35 U.S.C. § 41(a)(7) authorizes the Director to accept a petition "for the revival of an unintentionally abandoned application for

a patent." As amended December 1, 1997, 37 CFR 1.137(b)(3) provides that a petition under 37 CFR 1.137(b) must be accompanied by a statement that the delay was unintentional, but provides that "[t]he Commissioner may require additional information where there is a question whether the delay was unintentional." Where, as here, there is a question whether the initial delay was unintentional, the petitioner must meet the burden of establishing that the delay was unintentional within the meaning of 35 U.S.C. § 41(a)(7) and 37 CFR 1.137(b). *See* In re Application of G, 11 USPQ2d 1378, 1380 (Comm'r Pats. 1989); 37 CFR 1.137(b). Here, in view of the inordinate delay (over 4 years) in resuming prosecution, there is a question whether the entire delay was unintentional. Petitioner should note that the issue is not whether some of the delay was unintentional by any party; rather, the issue is whether the entire delay has been shown to the satisfaction of the Director to be unintentional.

The question under 37 CFR 1.137(b) for period (1) is whether the delay on the part of the party having the right or authority to reply to avoid abandonment (or not reply) was unintentional. Accordingly, any renewed petition must clearly identify the party having the right to reply to avoid abandonment on August 4, 2004. That party, in turn must explain what effort(s) was made to further reply to the outstanding Office action and, further, why no reply was filed. If no effort was made to further reply, then that party must explain why the delay in this application does not result from a deliberate course of action (or inaction). Likewise, as CANTOR COLBURN LLP was counsel of record at the time of abandonment, CANTOR COLBURN LLP should explain why this application became abandoned while it was under their control and what efforts CANTOR COLBURN LLP made to further reply of itself and with whom this matter was discussed outside of CANTOR COLBURN LLP. Copies of any correspondence relating to the filing, or to not filing a further reply to the outstanding Office action are required, as well as statements from any and all persons then at CANTOR COLBURN LLP having firsthand knowledge of the circumstances surrounding the lack of a reply to the outstanding Office action. As the courts have made clear, it is pointless for the USPTO to revive a long abandoned application without an adequate showing that the delay did not result from a deliberate course of action. *See* Lawman Armor v. Simon, 2005 U.S. Dist. LEXIS 10843, 74 USPQ2d 1633 (DC EMich 2005); Field Hybrids, LLC v. Toyota Motor Corp., 2005 U.S. Dist. LEXIS 1159 (D. Minn Jan. 27, 2005); Lumenyte Int'l Corp. v. Cable Lite Corp., Nos. 96-1011, 96-1077, 1996 U.S. App. LEXIS 16400, 1996 WL 383927 (Fed. Cir. July 9, 1996) (unpublished) (patents held unenforceable due to a finding of inequitable conduct in submitting an inappropriate statement that the abandonment was unintentional).

As to Period (2):

Where the applicant deliberately chooses not to seek or persist in seeking the revival of an abandoned application, or where the applicant deliberately chooses to delay seeking the revival of an abandoned application, the resulting delay in seeking revival of the abandoned application cannot be considered as "unintentional" within the meaning of 37 CFR 1.137(b). *See* MPEP 711.03(c).

The language of both 35 U.S.C. § 41(a)(7) and 37 CFR 1.137(b) are clear and unambiguous, and, furthermore, without qualification. That is, the delay in filing the reply during prosecution, as well as in filing the petition seeking revival, must have been, without qualification, "unintentional" for the reply to now be accepted on petition. The Office requires that the entire delay be at least unintentional as a prerequisite to revival of an abandoned application to prevent abuse and injury to the public. *See* H.R. Rep. No. 542, 97th Cong., 2d Sess. 7 (1982), reprinted in 1982 U.S.C.C.A.N. 771 ("[i]n order to prevent abuse and injury to the public the Commissioner . . . could require applicants to act promptly after becoming aware of the abandonment"). The December 1997 change to 37 CFR 1.137 did not create any new right to overcome an intentional delay in seeking revival, or in renewing an attempt at seeking revival, of an abandoned application. *See* Changes to Patent Practice and Procedure; Final Rule Notice, 62 Fed. Reg. 53131, 53160 (October 10, 1997), 1203 Off. Gaz. Pat. Office 63, 87 (October 21, 1997), which clearly stated that any protracted delay (here, over four years) could trigger, as here, a request for additional information. As the courts have since made clear, a protracted delay in seeking revival, as here, requires a petitioner's detailed explanation seeking to excuse the delay as opposed to USPTO acceptance of a general allegation of unintentional delay. *See* Lawman Armor v. Simon, 2005 U.S. Dist. LEXIS 10843, 74 USPQ2d 1633, at 1637-8 (DC EMich 2005); Field Hybrids, LLC v. Toyota Motor Corp., 2005 U.S. Dist. LEXIS 1159 (D. Minn Jan. 27, 2005) at *21-*23. Statements are required from any and all responsible person(s) having firsthand knowledge of the circumstances surrounding the protracted delay, after the abandonment date, in seeking revival.

As noted in MPEP 711.03(c)(II), subsection D, in instances in which such petition was not filed within 1 year of the date of abandonment of the application, applicants should include:

> (A) the date that the applicant first became aware of the abandonment of the application; and
> (B) a showing as to how the delay in discovering the abandoned status of the application occurred despite the

exercise of due care or diligence on the part of the applicant.

In either instance, applicant's failure to carry the burden of proof to establish that the "entire" delay was "unavoidable" or "unintentional" may lead to the denial of a petition under 37 CFR 1.137(b), regardless of the circumstances that originally resulted in the abandonment of the application. *See also* New York University v. Autodesk, 2007 U.S. DIST LEXIS, U.S.District LEXIS 50832, *10 -*12 (S.D.N.Y. 2007)(protracted delay in seeking revival undercuts assertion of unintentional delay).

Any renewed petition may be addressed as follows:

By Mail: Mail Stop PETITION
Commissioner for Patents
P. O. Box 1450
Alexandria, VA 22313-1450

By hand: U. S. Patent and Trademark Office
Customer Service Window, Mail Stop Petitions
Randolph Building
401 Dulany Street
Alexandria, VA 22314

The centralized facsimile number is **(571) 273-8300.**

Correspondence regarding this decision may also be filed through the electronic filing system of the USPTO.

Telephone inquiries concerning this decision should be directed to the undersigned at (571) 272-3204.

Sherry D. Brinkley

Sherry D. Brinkley
Petitions Examiner
Office of Petitions

cc: DANIEL F. DREXLER
CANTOR COLBURN LLP
20 CHURCH STREET, 22ND FLOOR
HARTFORD, CT 06103

UNITED STATES PATENT AND TRADEMARK OFFICE

Commissioner for Patents
United States Patent and Trademark Office
P.O. Box 1450
Alexandria, VA 22313-1450
www.uspto.gov

CANTOR COLBURN, LLP
20 CHURCH STREET
22ND FLOOR
HARTFORD, CT 06103

MAILED

FEB 19 2010

OFFICE OF PETITIONS

In re Application of	:	
Norbert Miller	:	
Application No. 09/769,827	:	DECISION ON PETITION
Filed: January 24, 2001	:	
Attorney Docket No. SWR-0038	:	

This is a decision on the petition, filed September 24, 2009, which is being treated as a petition under 37 CFR 1.8(b), requesting withdrawal of the holding of abandonment in the above-identified application.

The petition is **GRANTED**.

This application was held abandoned for failure to timely respond to the Office action of May 4, 2004, which set a three (3) month shortened statutory period for reply. Accordingly, a reply was due on or before August 4, 2004.

Petitioner states that a timely reply was mailed via certificate of mailing on November 4, 2004, which included an Amendment and Petition for Extension of Time. Petitioner has submitted a copy of the previously mailed correspondence, which bears a certificate of mailing dated November 4, 2004, which would have rendered the reply timely if received.

The file record does not include the originally submitted papers. Failure to receive correspondence which includes a certificate of mailing or certificate of facsimile transmission is addressed in 37 CFR 1.8(b), reproduced below:

> In the event that correspondence is considered timely filed by being mailed or transmitted in accordance with paragraph (a) of this section, but not received in the U.S. Patent and Trademark Office after a reasonable amount of time has elapsed from the time of mailing or transmitting of the correspondence, or after the application is held to be abandoned, or after the proceeding is dismissed, terminated, or decided with prejudice, the correspondence will be considered timely if the party who forwarded such correspondence:

(1) Informs the Office of the previous mailing or transmission of the correspondence promptly after becoming aware that the Office has no evidence of receipt of the correspondence;

(2) Supplies an additional copy of the previously mailed or transmitted correspondence and certificate; and

(3) Includes a statement which attests on a personal knowledge basis or to the satisfaction of the Director to the previous timely mailing or transmission. If the correspondence was sent by facsimile transmission, a copy of the sending unit's report confirming transmission may be used to support this statement.

The petition satisfies the above requirements of 37 CFR 1.8(b). Accordingly, the holding of abandonment for failure to timely file a reply to the Office action of May 4, 2004 is hereby withdrawn and the application restored to pending status.

The copy of the reply received with the petition will be accepted in place of the reply shown to have been mailed (or transmitted by facsimile) on November 4, 2004.

Since the record fails to show that the 3-month extension of time was paid in association with the response of November 4, 2004. The $950 extension fee is being is being charged to counsel's deposit account as authorized.

This application is being referred to Technology Center AU 3629 for appropriate action in the normal course of business on the reply received with petition.

Sherry D. Brinkley
Petitions Examiner
Office of Petitions

UNITED STATES PATENT AND TRADEMARK OFFICE

Commissioner for Patents
United States Patent and Trademark Office
P.O. Box 1450
Alexandria, VA 22313-1450
www.uspto.gov

Michael A. Cantor, Esq.
CANTOR COLBURN LLP
55 Griffin Road South
Bloomfield, CT 06002

COPY MAILED

APR 0 8 2009

OFFICE OF PETITIONS

In re Application of :
Norbert Miller, et al. :
Application No. 09/769,829 : DECISION ON PETITION
Filed: January 24, 2001 :
Attorney Docket No. SWR-0037 :

This is a decision on the petition under the unintentional provisions of 37 CFR 1.137(b), filed February 2, 2009, to revive the above-identified application.

The petition is **DISMISSED.**

Any request for reconsideration of this decision must be submitted within TWO (2) MONTHS from the mail date of this decision. Extensions of time under 37 CFR 1.136(a) are permitted. The reconsideration request should include a cover letter entitled "Renewed Petition under 37 CFR 1.137(b)." This is **not** a final agency action within the meaning of 5 U.S.C. § 704.

This application became abandoned as a result of petitioner's failure to file an appeal brief (and fee required by 37 CFR 41.20(b)(2)) within the time period provided in 37 CFR 41.37(a)(1). As an appeal brief (and appeal brief fee) was not filed within two (2) months of the Notice of Appeal filed October 27, 2005, and no extensions of time under the provisions of 37 CFR 1.136(a) were obtained, the appeal was dismissed and the proceedings as to the rejected claims were terminated. See 37 CFR 1.197(b). As no claim was allowed, the application became abandoned on December 28, 2005. *See* MPEP 1215.04. A Notice of Abandonment was mailed on June 19, 2006. On January 3, 2008, the present petition was filed.

A grantable petition under 37 CFR 1.137(b) must be accompanied by: (1) the required reply, unless previously filed; (2) the

petition fee as set forth in 37 CFR 1.17(m); (3) a statement that the entire delay in filing the required reply from the due date for the reply until the filing of a grantable petition pursuant to 37 CFR 1.137(b) was unintentional; and (4) any terminal disclaimer (and fee as set forth in 37 CFR 1.20(d)) required by 37 CFR 1.137(d). Where there is a question as to whether either the abandonment or the delay in filing a petition under 37 CFR 1.137 was unintentional, the Director may require additional information. *See* MPEP 711.03(c)(II)(C) and (D). The instant petition lacks item (3).

There are three periods to be considered during the evaluation of a petition under 37 CFR 1.137(b):

(1) the delay in reply that originally resulted in the abandonment;

(2) the delay in filing an initial petition pursuant to 37 CFR 1.137(b) to revive the application; and

(3) the delay in filing a grantable petition pursuant to 37 CFR 1.137(b) to revive the application.

Currently, the delay has not been shown to the satisfaction of the Director to be unintentional for periods (1) and (2).

<u>As to Period (1):</u>

The patent statute at 35 U.S.C. § 41(a)(7) authorizes the Director to revive an "unintentionally abandoned application." The legislative history of Public Law 97-247 reveals that the purpose of 35 U.S.C. § 41(a)(7) is to permit the Office to have more discretion than in 35 U.S.C. §§ 133 or 151 to revive abandoned applications in appropriate circumstances, but places a limit on this discretion, stating that "[u]nder this section a petition accompanied by either a fee of $500 or a fee of $50 **would not be granted where the abandonment** or the failure to pay the fee for issuing the patent **was intentional** as opposed to being unintentional or unavoidable." [emphasis added]. <u>See</u> H.R. Rep. No. 542, 97th Cong., 2d Sess. 6-7 (1982), *reprinted in* 1982 U.S.C.C.A.N. 770-71. The revival of an intentionally abandoned application is antithetical to the meaning and intent of the statute and regulation.

35 U.S.C. § 41(a)(7) authorizes the Director to accept a petition "for the revival of an unintentionally abandoned application for

a patent." As amended December 1, 1997, 37 CFR 1.137(b)(3) provides that a petition under 37 CFR 1.137(b) must be accompanied by a statement that the delay was unintentional, but provides that "[t]he Commissioner may require additional information where there is a question whether the delay was unintentional." Where, as here, there is a question whether the initial delay was unintentional, the petitioner must meet the burden of establishing that the delay was unintentional within the meaning of 35 U.S.C. § 41(a)(7) and 37 CFR 1.137(b). *See* In re Application of G, 11 USPQ2d 1378, 1380 (Comm'r Pats. 1989); 37 CFR 1.137(b). Here, in view of the inordinate delay (over three years) in resuming prosecution, there is a question whether the entire delay was unintentional. Petitioner should note that the issue is not whether some of the delay was unintentional by any party; rather, the issue is whether the entire delay has been shown to the satisfaction of the Director to be unintentional.

The question under 37 CFR 1.137(b) for period (1) is whether the delay on the part of the party having the right or authority to reply to avoid abandonment (or not reply) was unintentional. Accordingly, any renewed petition must clearly identify the party having the right to reply to avoid abandonment on December 28, 2005. That party, in turn must explain what effort(s) was made to further reply to the outstanding Office action and, further, why no reply was filed. If no effort was made to further reply, then that party must explain why the delay in this application does not result from a deliberate course of action (or inaction). Copies of any correspondence relating to the filing, or to not filing a further reply to the outstanding Office action are required from responsible person(s) and whoever else was involved with this application at the time of abandonment. Also, statements are required from any and all responsible person(s) having firsthand knowledge of the circumstances surrounding the lack of a reply to the outstanding Office action. As the courts have made clear, it is pointless for the USPTO to revive a long abandoned application without an adequate showing that the delay did not result from a deliberate course of action. *See* Lawman Armor v. Simon, 2005 U.S. Dist. LEXIS 10843, 74 USPQ2d 1633 (DC EMich 2005); Field Hybrids, LLC v. Toyota Motor Corp., 2005 U.S. Dist. LEXIS 1159 (D. Minn Jan. 27, 2005); Lumenyte Int'l Corp. v. Cable Lite Corp., Nos. 96-1011, 96-1077, 1996 U.S. App. LEXIS 16400, 1996 WL 383927 (Fed. Cir. July 9, 1996) (unpublished) (patents held unenforceable due to a finding of inequitable conduct in submitting an inappropriate statement that the abandonment was unintentional).

As to Period (2):

Likewise, where the applicant deliberately chooses not to seek or persist in seeking the revival of an abandoned application, or where the applicant deliberately chooses to delay seeking the revival of an abandoned application, the resulting delay in seeking revival of the abandoned application cannot be considered as "unintentional" within the meaning of 37 CFR 1.137(b). *See* MPEP 711.03(c).

The language of both 35 U.S.C. § 41(a)(7) and 37 CFR 1.137(b) are clear and unambiguous, and, furthermore, without qualification. That is, the delay in filing the reply during prosecution, as well as in filing the petition seeking revival, must have been, without qualification, "unintentional" for the reply to now be accepted on petition. The Office requires that the entire delay be at least unintentional as a prerequisite to revival of an abandoned application to prevent abuse and injury to the public. *See* H.R. Rep. No. 542, 97th Cong., 2d Sess. 7 (1982), reprinted in 1982 U.S.C.C.A.N. 771 ("[i]n order to prevent abuse and injury to the public the Commissioner . . . could require applicants to act promptly after becoming aware of the abandonment"). The December 1997 change to 37 CFR 1.137 did not create any new right to overcome an intentional delay in seeking revival, or in renewing an attempt at seeking revival, of an abandoned application. *See* Changes to Patent Practice and Procedure; Final Rule Notice, 62 Fed. Reg. 53131, 53160 (October 10, 1997), 1203 Off. Gaz. Pat. Office 63, 87 (October 21, 1997), which clearly stated that any protracted delay (here, over three years) could trigger, as here, a request for additional information. As the courts have since made clear, a protracted delay in seeking revival, as here, requires a petitioner's detailed explanation seeking to excuse the delay as opposed to USPTO acceptance of a general allegation of unintentional delay. *See* Lawman Armor v. Simon, 2005 U.S. Dist. LEXIS 10843, 74 USPQ2d 1633, at 1637-8 (DC EMich 2005); Field Hybrids, LLC v. Toyota Motor Corp., 2005 U.S. Dist. LEXIS 1159 (D. Minn Jan. 27, 2005) at *21-*23. Statements are required from any and all responsible person(s) having firsthand knowledge of the circumstances surrounding the protracted delay, after the abandonment date, in seeking revival.

As noted in MPEP 711.03(c)(II), subsection D, in instances in which such petition was not filed within 1 year of the date of abandonment of the application, applicants should include:

> (A) the date that the applicant first became aware of the abandonment of the application; and

(B) a showing as to how the delay in discovering the abandoned status of the application occurred despite the exercise of due care or diligence on the part of the applicant.

In either instance, applicant's failure to carry the burden of proof to establish that the "entire" delay was "unavoidable" or "unintentional" may lead to the denial of a petition under 37 CFR 1.137(b), regardless of the circumstances that originally resulted in the abandonment of the application. *See also* New York University v. Autodesk, 2007 U.S. DIST LEXIS, U.S.District LEXIS 50832, *10 -*12 (S.D.N.Y. 2007)(protracted delay in seeking revival undercuts assertion of unintentional delay).

Further correspondence with respect to this matter should be delivered through one of the following mediums:

By mail: Mail Stop PETITIONS
Commissioner for Patents
Post Office Box 1450
Alexandria, VA 22313-1450

By hand: Customer Service Window
Mail Stop Petitions
Randolph Building
401 Dulany Street
Alexandria, VA 22314

By fax: (571) 273-8300
ATTN: Office of Petitions

By Internet: EFS-Web[1]

Telephone inquiries concerning this decision should be directed to the undersigned at (571) 272-3204.

Sherry D. Brinkley
Petitions Examiner
Office of Petitions

[1] www.uspto.gov/ebc/efs_help.html (for help using EFS-Web call the Patent Electronic Business Center at (866) 217-9197)

UNITED STATES PATENT AND TRADEMARK OFFICE

Commissioner for Patents
United States Patent and Trademark Office
P.O. Box 1450
Alexandria, VA 22313-1450
www.uspto.gov

COPY MAILED

DEC 03 2009

OFFICE OF PETITIONS

MICHAEL A. CANTOR, ESQ.
CANTOR COLBURN LLP
55 GRIFFIN ROAD SOUTH
BLOOMFIELD, CT 06002

In re Application of
Norbert Miller, et al.
Application No. 09/769,829
Filed: January 24, 2001
Attorney Docket No. SWR-0037

ON PETITION

This is a decision in response to the petition, filed October 16, 2009, to revive the above-identified application under the provisions of 37 CFR 1.137(b).

The petition is **GRANTED**.

This application became abandoned for a failure to file an appeal brief (and fee required by 37 CFR 41.20(b)(2)) within the time period provided in 37 CFR 41.37(a)(1). A Notice of Abandonment was mailed on June 19, 2006. On February 2, 2009, a petition under 37 CFR 1.137(b) was filed; however, the petition was dismissed in a decision mailed April 8, 2009. In response, on October 16, 2009, the present petition was filed, wherein an explanation of the delay has been provided.

This application has been abandoned for an extended period of time. The U.S. Patent and Trademark Office is relying on petitioner's duty of candor and good faith and accepting the statement that "the entire delay in filing the required reply from the due date for the reply until the filing of a grantable petition pursuant to 37 CFR 1.137(b) was unintentional." *See* Changes to Patent Practice and Procedure, 62 Fed. Reg., at 53160 and 53178; 1203 Off. Gaz. Pat. Office, at 88 and 103 (responses to comments 64 and 109) (applicant obligated under 37 CFR 10.18 to inquire into the underlying facts and circumstances when providing the statement required by 37 CFR 1.137(b) to the U.S. Patent and Trademark Office).

The petition satisfies the requirements of 37 CFR 1.137(b) in that petitioner has supplied (1) the reply in the form of a Request for Continued Examination (RCE) and fee of $810, and the submission required by 37 CFR 1.114; (2) the petition fee of $1,620; and (3) an adequate statement of unintentional delay.

This application is being referred to Technology Center AU 3629 for processing of the RCE and for appropriate action by the Examiner in the normal course of business on the amendment submitted in accordance with 37 CFR 1.114.

Telephone inquiries concerning this decision should be directed to the undersigned at (571) 272-3204. Inquiries relating to further prosecution should be directed to the Technology Center.

Sherry D. Brinkley
Petitions Examiner
Office of Petitions

UNITED STATES PATENT AND TRADEMARK OFFICE

COMMISSIONER FOR PATENTS
UNITED STATES PATENT AND TRADEMARK OFFICE
WASHINGTON, D.C. 20231
www.uspto.gov

Paper No. 6

Hans R. Troesch
Fish & Richardson P.C.
2200 Sand Hill Road, Suite 100
Menlo Park, CA 94025

20 MAY 2002

In re Application of:
Michael ABBOTT
Application No.: 09/769,835
Filed: January 24, 2001
For: SUPPLY CHAIN OPTIMIZATION

DECISION ON REQUEST FOR WITHDRAWAL AS ATTORNEY

This is a decision on the Request For Withdrawal As Attorney Under 37 CFR § 1. 36 and 10.40(c) filed January 22, 2002.

A Power Of Attorney Under 37 CFR § 1. 36 was filed on October 22, 2001. The Power Of Attorney revoked all prior Powers Of Attorney and appointed MORRIS MANNING & MARTIN LLP as the attorneys of record of the instant application. The Power Of Attorney of October 22, 2001 was accepted. Accordingly, all communications from the U.S. Patent and Trademark Office to applicant are to be conducted by MORRIS MANNING & MARTIN.

For the above stated reasons, the request is **DISMISSED AS MOOT**.

No further communication to you regarding this application will be made.

Vincent N. Trans
Special Program Examiner
Technology Center 2100
Computer Architecture, Software,
and Electronic Commerce
(703) 305-9750

cc: Morris Manning & Martin LLP
1600 Atlanta Financial Center
3343 Peachtree Road, NE
Atlanta, GA 30326-1044

UNITED STATES PATENT AND TRADEMARK OFFICE

MAILED

FEB 01 2002

DIRECTOR'S OFFICE
TECHNOLOGY CENTER 2100

Commissioner for Patents
United States Patent and Trademark Office
Washington, D.C. 20231
www.uspto.gov

Paper No. 5

Hans R. Troesch
FISH & RICHARDSON P.C.
2200 Sand Hill Road, Suite 100
Menlo Park, CA 94025

In re Application of: John William LOCKE Application No.: 09/769,841 Filed: January 24, 2001 For: OPTIMIZING BUSINESS PROCESSES USING COST FUNCTIONS	)	**DECISION ON REQUEST FOR WITHDRAWAL AS ATTORNEY**

This is a decision on the Request For Withdrawal As Attorney Under 37 CFR § 1. 36 and 10.40(c) filed January 2, 2002.

A Power Of Attorney Under 37 CFR § 1. 36 was filed on October 22, 2001. The Power Of Attorney revoked all prior Powers Of Attorney and appointed Jon M. Jurgovan of MORRIS, MANNING & MARTIN, LLP as the attorneys of record of the instant application. The Power Of Attorney of October 22, 2001 was accepted. Accordingly, all communications from the U.S. Patent and Trademark Office to applicant are to be conducted by Jon M. Jurgovan.

For the above stated reasons, the request is DISMISSED AS MOOT.

No further communication to you regarding this application will be made.

Vincent N. Trans
Special Program Examiner
Technology Center 2100
Computer Architecture, Software,
and Electronic Commerce
(703) 305-9750

cc: Jon M. Jurgovan, Esq.
MORRIS, MANNING & MARTIN, LLP
3343 Peachtree Road, N.E.
Atlanta, GA 30326-1427

UNITED STATES PATENT AND TRADEMARK OFFICE

Commissioner for Patents
United States Patent and Trademark Office
Washington, D.C. 20231
www.uspto.gov

Paper No. 10

Ma-Chi Chen
19721 Auburn Court
Cupertino, CA 95014

COPY MAILED

DEC 2 3 2002

OFFICE OF PETITIONS

In re Application of
CHEN
Application No. 09/769,879
Filed: January 24, 2001
Attorney Docket No. 09/769,879

ON PETITION

This is a decision on the petition to revive filed, December 2, 2002, to revive the above-identified application on the grounds that the delay in responding to the Office action was unintentional.

The petition is **DISMISSED**.

The above-identified application became abandoned for failure to reply in a timely manner to the Non-Final office action mailed April 19, 2002, which set a shortened statutory period for reply of three-months. No extensions of time under the provisions of 37 CFR 1.136(a) have been filed. Accordingly, the application became abandoned on July 20, 2002.

Any request for reconsideration of this decision must be submitted within TWO (2) MONTHS from the mail date of this decision. Extensions of time under 37 CFR 1.136(a) are permitted. The reconsideration request should include a cover letter entitled "Renewed Petition under 37 CFR 1.137(b)." This is **not** final agency action within the meaning of 5 U.S.C. § 704.

A grantable petition under 37 CFR 1.137(b) must be accompanied by: (1) the required reply, unless previously filed; (2) the petition fee as set forth in 37 CFR 1.17(m); (3) a statement that the entire delay in filing the required reply from the due date for the reply until the filing of a grantable petition pursuant to 37 CFR 1.137(b) was unintentional; and (4) any terminal disclaimer (and fee as set forth in 37 CFR 1.20(d)) required by 37 CFR 1.137(c). Where there is a question as to whether either the abandonment or the delay in filing a petition under 37 CFR 1.137 was unintentional, the Commissioner may require additional information. See MPEP 711.03(c)(III)(C) and (D). The instant petition lack(s) item(s) (1).

Petitioner submitted a $55 petition fee with the petition filed December 2, 2002. However, the current fee (small entity) for filing a petition to revive under 37 CFR 1.137(b) is $640. Accordingly, an additional balance of $585 is due to before revival of the application can be effected.

In order to expedite a decision on the petition, petitioner may wish to consider submitting the response to the address noted below and to the attention of the undersigned.

Further correspondence with respect to this matter should be addressed as follows:

By mail: Office of Petitions
Assistant Commissioner for Patents
Box DAC
Washington, D.C. 20231

By facsimile: (703) 308-6916
Attn: Office of Petitions

By hand: Office of Petitions
2201 South Clark Place
Crystal Plaza 4, Suite 3C23
Arlington, VA 22202

Telephone inquiries concerning this decision should be directed to Latrice Bond at (703) 308-6911.

Latrice Bond

Latrice Bond
Paralegal Specialist
Office of Petitions
Office of the Deputy Commissioner
for Patent Examination Policy

UNITED STATES PATENT AND TRADEMARK OFFICE

Commissioner for Patents
United States Patent and Trademark Office
Washington, D.C. 20231
www.uspto.gov

Paper No. 12

Ma-Chi Chen
19721 Auburn Court
Cupertino, CA 95014

COPY MAILED

JAN 3 0 2003

OFFICE OF PETITIONS

In re Application of :
Chen, M. :
Application No. 09/769,879 : ON PETITION
Filed: January 24, 2001 :
Attorney Docket No. N/A :

This is a decision on the petition renewed petition under 37 CFR 1.137(b), filed January 21, 2003, to revive the above-identified application.

The petition is **GRANTED**.

The above-identified application became abandoned for failure to reply in a timely manner to the non-final Office action mailed April 19, 2002, which set a shortened statutory period for reply of three (3) months. No extensions of time under the provisions of 37 CFR 1.136(a) were obtained. Accordingly, the above-identified application became abandoned on July 20, 2002.

Telephone inquiries concerning this decision should be directed to Latrice Bond at (703) 308-6911.

The application file is being forwarded to Technology Center AU 3635.

Latrice Bond

Latrice Bond
Paralegal Specialist
Office of Petitions
Office of the Deputy Commissioner
for Patent Examination Policy

UNITED STATES PATENT AND TRADEMARK OFFICE

COMMISSIONER FOR PATENTS
UNITED STATES PATENT AND TRADEMARK OFFICE
WASHINGTON, DC 20231
www.uspto.gov

Paper No. 8

MAIL

NOV 20 2002

DIRECTOR OFFICE
TECHNOLOGY CENTER 2600

SILICON VALLEY INTELLECTUAL PROPERTY GROUP
P.O. BOX 721120
SAN JOSE CA 95172-1120

In re Application Serial No.:

09/769,880

ON REQUEST TO
WITHDRAW AS ATTORNEY

The Request to Withdraw as Attorney is **GRANTED**.

Further communications will be directed to the address listed below until such a time as applicant properly notifies the Patent and Trademark Office of a change of address. This address has been provided by the withdrawing attorney(s).

Kenneth A. Wieder
Special Program Examiner
Technology Center 2600
Communications

cc: BeVocal, Inc.
685 Clyde Avenue
Mountain View, CA 94043-2213

UNITED STATES PATENT AND TRADEMARK OFFICE

COMMISSIONER FOR PATENTS
UNITED STATES PATENT AND TRADEMARK OFFICE
P.O. BOX 1450
ALEXANDRIA, VA 22313-1450
www.uspto.gov

Paper No. 16

Be Vocal
685 Clyde Avenue
Mountain View, CA 94043-2213

COPY MAILED

NOV 29 2004

OFFICE OF PETITIONS

In re Application of :
Bertrand A. Damiba :
Application No. 09/769,880 : ON PETITION
Filed: January 24, 2001 :
Attorney Docket No. BVOCP001 :

This is a decision on the petition under 37 CFR 1.137(b), filed August 9, 2004, to revive the above-identified application.

The petition is **GRANTED**.

There is no indication that the person signing the instant petition was ever given a power of attorney or authorization of agent to prosecute the above-identified application. However, in accordance with 37 CFR 1.34(a), the signature of Kevin Zilka appearing on the petition shall constitute a representation to the United States Patent and Trademark Office that he is authorized to represent the particular party in whose behalf he acts. However, if Mr. Zilka desires to receive future correspondence regarding this application, the appropriate power of attorney or authorization of agent must be submitted. A courtesy copy of this decision is being mailed to petitioner. Nevertheless, all future correspondence regarding this application file will be directed solely to the address of record until otherwise instructed.

Telephone inquiries concerning this decision should be directed to the undersigned at (571) 272-3223.

The application file is being forwarded to Technology Center 2600.

Marianne E. Jenkins
Petitions Examiner
Office of Petitions
Office of the Deputy Commissioner
for Patent Examination Policy

cc: Kevin J. Zilka
Silicon Valley IP Group, PC
P. O. Box 721120
San Jose, CA 95172-1120

UNITED STATES PATENT AND TRADEMARK OFFICE

Commissioner for Patents
United States Patent and Trademark Office
P.O. Box 1450
Alexandria, VA 22313-1450
www.uspto.gov

Be Vocal
685 Clyde Avenue
Mountain View, CA 94043-2213

COPY MAILED

APR 03 2008

OFFICE OF PETITIONS

In re Application of :
Bertrand A. Damiba :
Application No. 09/769,880 : DECISION ON PETITION
Filed: January 24, 2001 :
Attorney Docket No. BVOCP001 :

This is a decision on the petition under the unintentional provisions of 37 CFR 1.137(b), filed 06 February 2008, to revive the above-identified application.

The petition is **GRANTED**.

This application became abandoned for failure to timely submit corrected formal drawings on or before 22 April 2007, as required by the notice to file corrected application papers, mailed 22 February 2007. Accordingly, the date of abandonment of this application is 23 April 2007.

The petition satisfies the requirements of 37 CFR 1.137(b) in that petitioner has supplied (1) the reply in the form of a corrected formal drawing, (2) the petition fee of $1,540.00; and (3) a proper statement of unintentional delay.

It is not apparent whether the person signing the statement of unintentional delay was in a position to have firsthand or direct knowledge of the facts and circumstances of the delay at issue. Nevertheless, such statement is being treated as having been made as the result of a reasonable inquiry into the facts and circumstances of such delay. See 37 CFR 10.18(b) and Changes to Patent Practice and Procedure; Final Rule Notice, 62 Fed. Reg. 53131, 53178 (October 10, 1997), 1203 Off. Gaz. Pat. Office 63, 103 (October 21, 1997). In the event that such an inquiry has not been made, petitioner must make such an inquiry. If such inquiry results in the discovery that the entire delay in filing the required reply from the due date for the reply until the filing of a grantable petition pursuant to 37 CFR 1.137(b) was intentional, petitioner must notify the Office.

There is no indication that the person signing the petition was ever given a power of attorney to prosecute the application. Although a power of attorney was filed on 09 August 2004, it fails to comply with 37 CFR 3.73(b)(1). Accordingly, the change of correspondence address filed April 16, 2007 is not proper. If the person signing the petition desires to receive future correspondence

regarding this application, the appropriate power of attorney document must be submitted. While a courtesy copy of this decision is being mailed to the person signing the petition, all future correspondence will be directed to the address currently of record until appropriate instructions are received.

Telephone inquiries concerning this decision should be directed to Allen C. Ho at (571) 272-6052.

This application is being referred to Publishing Division for processing into a patent.

Chris Bottich

for David Bucci
Petitions Examiner
Office of Petitions

Cc:
Kevin J. Silka
Zilka-Kotab, PC
P.O. Box 721120
San Jose, CA 95172-1120

UNITED STATES PATENT AND TRADEMARK OFFICE

Commissioner for Patents
United States Patent and Trademark Office
Washington, D.C. 20231
www.uspto.gov

Paper No. 4

COPY MAILED

JUL 27 2001

OFFICE OF PETITIONS
A/C PATENTS

JOHN P WHITE
COOPER & DUNHAM LLP
1185 AVENUE OF THE AMERICAS
NEW YORK NY 10036

In re Application of
Goodman, et al.
Application No. 09/769,902
Filed: January 25, 2001
Attorney Docket No. 61545/JPW/RA

DECISION ON PETITION

This is a decision on the petition filed May 10, 2001 (certificate of mailing on May 7, 2001), requesting that the above-identified application be accorded a filing date of January 25, 2001.

Application papers in the above-identified application were filed on January 25, 2001. However, on March 7, 2001, the Initial Patent Examination Division mailed a "Notice of Incomplete Nonprovisional Application," stating that the application had not been accorded a filing date because the application was deposited without drawings.

In response, applicant timely filed the instant petition, asserting that drawings were submitted with the original filing on January 25, 2001. In support, applicant stated that he included a postcard receipt referencing that a transmittal letter was submitted. The transmittal letter, in turn, indicates that two sheets of informal drawings were submitted.

A review of the application file does not turn up a postcard receipt. Regardless, even if applicant had submitted this postcard receipt as described in the instant petition, it would not be sufficient to establish that drawings were included with the original filing. Only a postcard receipt which itemizes and properly identifies the items which are being filed serves as *prima facie* evidence of receipt in the Office of the items. See MPEP 503. Therefore, a postcard receipt which references a transmittal letter only serves as evidence of receipt in the Office of the transmittal letter, and not of items which are listed on the transmittal letter.

The filing date of an application shall be the date on which the specification and any required drawing are received in the Patent and Trademark Office. 35 U.S.C. 111(a)(4). However, it is the practice of the Office to treat an application that contains at least one process or method claim as an application for which a drawing is not necessary for an understanding of the invention under 35 U.S.C. 113. MPEP 601.01(f). Petitioner is advised that in a situation in which the appropriate examining group later determines that drawings are necessary under 35 U.S.C. 113 the filing date issue will be reconsidered by the PTO.

A review of the original application papers filed January 25, 2001, reveals that they contained at least one method claim. Thus, the application, containing a specification and at least one claim, was complete within the meaning of 37 C.F.R. 1.53(b), and entitled to a filing date of January 25, 2001.

Accordingly, the petition is **granted** to the extent that the application will be accorded the January 25, 2001 filing date with no drawings as a part of the original disclosure of the application.

In regards to withdrawing the Notice, MPEP 601.01(f) also states that:

> A nonprovisional application having at least one claim, ... directed to subject matter discussed above for which a drawing is usually not considered essential for a filing date, describing drawings figure(s) in the specification, but filed without drawings will be treated as an application without all of the drawing figures referred to in the specification as discussed in MPEP §601.01(g), so long as the application contains something that can be construed as a written description.

And, MPEP 601.01(g) further provides that:

> If the application is filed without all of the drawing figure(s) referred to in the specification, ..., OIPE will mail a "Notice of Omitted Item(s)" indicating that the application papers so deposited have been accorded a filing date, but are lacking some of the figures of the drawings described in the specification.

It is noted that the specification filed on January 25, 2001, describes drawings containing Figures 1 and 2, but no drawings were filed on January 25, 2001. Accordingly, it is concluded that the "Notice of Incomplete Application" mailed March 7, 2001, was mailed in error and is hereby **withdrawn**.

An amendment canceling all references in the specification to the omitted drawing should be filed prior to the first Office action on the merits.

Given the basis for granting this petition, the petition fee is being refunded to Deposit Account No. 03-3125, as authorized.

This application is being forwarded to the Office of Initial Patent Examination for further processing, including mailing of a filing receipt, with a filing date of January 25, 2001 and for indication on the file wrapper label that "0" sheets of drawings were present on filing. Applicant will receive appropriate notifications regarding any missing items or fees owed, and other information in due course from OIPE.

Telephone inquiries specific to this decision may be directed to

Petitions Attorney Cliff Congo at (703) 305-0272.

Beverly M. Flanagan
Supervisory Petitions Examiner
Office of Petitions
Office of the Deputy Commissioner
for Patent Examination Policy

SEP 2 6 2001

UNITED STATES PATENT AND TRADEMARK OFFICE

JC13 Rec'd PCT/PTO 27 FEB 2002

COMMISSIONER FOR PATENTS
UNITED STATES PATENT AND TRADEMARK OFFICE
WASHINGTON, D.C. 20231
www.uspto.gov

Lance K. Ishimoto
Lexicon Genetics Incorporated
4000 Research Forest Drive
The Woodland, Texas 77381

In re Application of LEXICON GENETICS Appl. No.: PCT/US01/26687 and 09/769,952 Filing Date: 25 January 2001 Attorney Docket No.: LEX-0118-PCT & LEX-0118-USA For: NOVEL HUMAN ENZYMES AND POLYNUCLEOTIDES ENCODING THE SAME	:	DECISION

This is in response to applicant's "Petition under 37 CFR 1.182" filed on 09 March 2001.

BACKGROUND

On 25 January 2001, applicant filed the two patent applications. The first set of application papers included: 1) 5 pages of Request Form; 2) 28 pages of specification (1 claim page, 1 page Abstract, 26 pages Description); 3) a PCT Fee Calculation Sheet; 5); 2 8 pages of Sequence Listing; 6) power of attorney; 7) executed verified statement and 8) a PCT Easy Diskette. The second set of application papers included: 1) Utility Patent Application Transmittal Sheet; 2) 28 pages of specification (1 claim page, 1 page Abstract, 26 pages Description); 3) a PCT Fee Calculation Sheet; 5); 2 8 pages of Sequence Listing; 6) power of attorney; and 7) an executed verified statement. All papers were accorded application no. 09/769,952.

On 09 March 2001, applicant filed "Petition under 37 CFR 1.182" requesting that the Patent and Trademark Office (PTO) remove the PCT application from the U.S. application file (09/769,952) and accord the PCT application with an appropriate International application number and filing date of 25 January 2001.

DISCUSSION

A review of the evidence submitted by applicants, and other United States Patent and Trademark Office record reveals that the United States Receiving Office (RO/US) received two sets of application papers on 25 January 2001. Accordingly, the PCT application papers will be removed from the U.S. application file and placed in a PCT application file. These papers will given PCT application number (PCT/US01/26687) and will be accorded an international filing date of **25 January 2001**.

The payment of the amount of $1,957.00 as indicated on the Fee Calculation Sheet has been charged applicant's Deposit Account no. 50-0892 per authorization of the Fee Calculation Sheet.

JC13 Rec'd PCT/PTO 27 FEB 2002

CONCLUSION

Applicant's petition under 37 CFR 1.182 is **GRANTED**.

PCT application no. PCT/US01/26687 is being returned to the United States Receiving Office for issuing a Notification of the International Application Number and of the International Filing Date (Form PCT/RO/105) indicating an international filing date of **25 January 2001**.

Boris Milef
PCT Legal Examiner
PCT Legal Office

Anthony Smith
Petitions Attorney
PCT Legal Office
Telephone: (703) 308-6314
Facsimile: (703) 308-6459

UNITED STATES PATENT AND TRADEMARK OFFICE

Commissioner for Patents
United States Patent and Trademark Office
P.O. Box 1450
Alexandria, VA 22313-1450
www.uspto.gov

NOVARTIS
CORPORATE INTELLECTUAL PROPERTY
ONE HEALTH PLAZA 430/2
EAST HANOVER, NJ 07936-1080

COPY MAILED
JUN 0 2 2004
OFFICE OF PETITIONS

In re Application of :
Peter Lloyd Amlot, et al. :
Application No. 09/770,002 :
Filed: January 25, 2001 :
Attorney Docket No. 4-30583A :

ON PETITION

This is a decision on the petition under 37 CFR 1.137(b), filed March 26, 2004, to revive the above-identified application.

The petition is **GRANTED**.

The two-month period for filing an appeal brief in triplicate (accompanied by the fee required by 37 CFR 1.17(c)), runs from the date of this decision.

The above-identified application became abandoned for failure to reply in a timely manner to the final Office action mailed April 28, 2003, which set a shortened statutory period for reply of three (3) months. A three-month extension of time under the provisions of 37 CFR 1.136(a) was obtained. Accordingly, the application became abandoned at on October 29, 2003.

Telephone inquiries concerning this decision should be directed to the undersigned at (703) 306-5594.

The application file is being forwarded to the Technology Center 1600, Art Unit 1644 for further processing.

Retta Williams

Retta Williams
Petitions Examiner
Office of Petitions
Office of the Deputy Commissioner
for Patent Examination Policy

UNITED STATES PATENT AND TRADEMARK OFFICE

Commissioner for Patents
United States Patent and Trademark Office
P.O. Box 1450
Alexandria, VA 22313-1450
www.uspto.gov

NOVARTIS
CORPORATE INTELLECTUAL PROPERTY
ONE HEALTH PLAZA 104/3
EAST HANOVER NJ 07936-1080

COPY MAILED
JUL 14 2006
OFFICE OF PETITIONS

In re Application of :
Amlot, et al. :
Application No. 09/770,002 : ON PETITION
Filed: January 25, 2001 :
Attorney Docket No. 4-30583A :
For: USE OF CD25 BINDING MOLECULES IN THE TREATMENT OF RHEUMATOID ARTHRITIS OR SKIN DISEASES

This is a decision on the petition under 37 CFR 1.137(b), filed on May 19, 2006 to revive the above-identified application.

This application became abandoned for failure to timely file a follow-up submission within two months of the mail date of the June 2, 2004 decision on petition, which entered applicants' Notice of Appeal. Accordingly, this application became abandoned on August 3, 2004. The filing of the present petition precedes the mailing of A Notice of Abandonment.

Applicants have submitted a RCE and required fee and a request to consider the amendment filed on October 28, 2003 as the follow-up submission to the Notice of Appeal, an acceptable statement of the unintentional nature of the delay in filing a follow-up submission to the Notice of Appeal, and the petition fee.

The petition is **GRANTED**.

After the mailing of this decision the application will be forwarded to Technology Center AU 1644 for consideration of the RCE filed on May 19, 2006.

Telephone inquiries pertaining to this decision may be directed to the undersigned at (571) 272-3230.

Shirene Willis Brantley
Shirene Willis Brantley
Senior Petitions Attorney
Office of Petitions

UNITED STATES PATENT AND TRADEMARK OFFICE

Commissioner for Patents
United States Patent and Trademark Office
P.O. Box 1450
Alexandria, VA 22313-1450
www.uspto.gov

Paper No. 9

WAGNER MURABITO & HAO
TWO NORTH MARKET STREET
THIRD FLOOR
SAN JOSE, CA 95113

COPY MAILED

JUN 08 2005

OFFICE OF PETITIONS

ON PETITION

In re Application of	:	
Terry R. Weissman	:	
Application No. 09/770,067	:	
Filed: January 24, 2001	:	
Attorney Docket No. TLME-01-020	:	

This is a decision on the petition under 37 CFR 1.137(b), filed May 16, 2005, to revive the above-identified application.

The petition is **GRANTED**.

The above-identified application became abandoned for failure to reply in a timely manner to the non-final Office action mailed February 2, 2004, which set a shortened statutory period for reply of three (3) months. No extensions of time under the provisions of 37 CFR 1.136(a) were obtained. Accordingly, the above-identified application became abandoned on May 3, 2004.

37 CFR 1.137(b)(3) requires a statement that the entire delay in filing the required reply from the due date for the reply until the filing of a grantable petition pursuant to 37 CFR 1.137(b) was unintentional. If the statement contained in the instant petition varies from the language required by 37 CFR 1.137(b)(3), the statement contained in the instant petition is being construed as the statement required by 37 CFR 1.137(b)(3) and petitioner must notify the Office if this is **not** a correct interpretation of the statement contained in the instant petition.

The Power of Attorney ... filed on November 8, 2004 is entered and made of record (copies attached).

Telephone inquiries concerning this decision should be directed to Wan Laymon at (571) 272-3220.

The application file is being forwarded to Technology Center AU 2645.

Wan Laymon

Wan Laymon
Petitions Examiner
Office of Petitions
Office of the Deputy Commissioner
for Patent Examination Policy

Attachments: Notice Regarding Change of Power of Attorney
Notice of Acceptance of Power of Attorney

SPE RESPONSE FOR CERTIFICATE OF CORRECTION

Paper No.: _____

DATE : 06-24-06

TO SPE OF : ART UNIT 2629

SUBJECT : Request for Certificate of Correction for Appl. No.: **09/770078** Patent No.: **7046239**

Please respond to this request for a certificate of correction within 7 days.

Please review the requested changes/corrections as shown in the **COCIN** document(s) in the IFW application image. No new matter should be introduced, nor should the scope or meaning of the claims be changed.

Please complete the response (see below) and forward the completed response to scanning using document code **COCX**.

Angela Green
Certificates of Correction Branch
703.308.9380 ext. 123

Thank You For Your Assistance

The request for issuing the above-identified correction(s) is hereby:
Note your decision on the appropriate box.

☒ **Approved**	**All** changes apply.
☐ **Approved in Part**	Specify below which changes **do not** apply.
☐ **Denied**	State the reasons for denial below.

Comments: _____

RICHARD HJERPE
SUPERVISORY PATENT EXAMINER
TECHNOLOGY CENTER 2600

SPE

2629
Art Unit

UNITED STATES PATENT AND TRADEMARK OFFICE

UNDER SECRETARY OF COMMERCE FOR INTELLECTUAL PROPERTY AND
DIRECTOR OF THE UNITED STATES PATENT AND TRADEMARK OFFICE
WASHINGTON, D.C. 20231
www.uspto.gov

Paper No. 8

Keith Kline
Pro-techtor International Services
20775 Norada Court
Saratoga, CA 95070-3018

MAY 1 2003

In re Application of	:	
Wen Chuan Chen et al.	:	DECISION ON PETITION
Application No.: 09/770,081	:	TO WITHDRAW THE
Filing Date: January 24, 2001	:	HOLDING OF ABANDONMENT
Attorney Docket No.: 2011007	:	

This is a decision on the petition to withdraw the holding of abandonment under C.F.R. § 1.181 filed on February 11, 2003. There is no fee for this petition.

The petition is **GRANTED**.

The application was held abandoned for failure to timely reply to the Office action mailed on July 19, 2002. The shortened statutory period to respond to the Office action was set to expire TWO MONTHS from the mailing of the Office action. A Notice of Abandonment was mailed on October 22, 2002.

Petitioner asserts that a timely response to the Office action was mailed on September 19, 2002. To support this assertion, petitioner has submitted a copy of the response (petition to proceed without joint inventors) and a statement which attests on a personal knowledge basis as to the timely mailing of the response.

A review of the application reveals that the original response (petition to proceed without joint inventors) is in the file. It was received at the PTO on September 25, 2002. The response includes a Certificate of Mailing dated September 19, 2002 so the response was timely under 37 C.F.R. § 1.8. The petition to proceed without joint inventors was a timely filed proper reply to the Office action mailed July 19, 2002 so it is clear that there was no abandonment in fact. In any case, the mailing of a Notice of Abandonment on October 22, 2002 was premature in that extensions of time to respond to the Office action were available under 37 C.F.R. § 1.136(a).

The Notice of Abandonment mailed October 22, 2002 is **VACATED**.

The application is being forwarded to the Office of Petitions for the preparation of a decision on the petition to proceed without joint inventors.

Any questions concerning this decision should be directed to Edward Westin at (703) 308-4823.

Edward Westin

Edward P. Westin, Special Programs Examiner
Technology Center 2800
Semiconductors, Electrical and Optical
Systems and Components

UNITED STATES PATENT AND TRADEMARK OFFICE

COMMISSIONER FOR PATENTS
UNITED STATES PATENT AND TRADEMARK OFFICE
P.O. BOX 1450
ALEXANDRIA, VA 22313-1450
www.uspto.gov
DIW 08-03

Paper No. 12

KEITH KLINE
PRO-TECHTOR INTERNATIONAL SERVICES
20775 NORADA COURT
SARATOGA CA 95070-3018

COPY MAILED

AUG 2 8 2003

OFFICE OF PETITIONS

In re Application of :
Chen et al. :
Application No. 09/770,081 : ON PETITION
Filed: 24 January, 2001 :
Attorney Docket No. 2011007 :

This is a decision on the petition styled under 37 CFR 1.48, filed on 25 September, 2002, which is being treated as a petition filed under 37 CFR 1.183, requesting waiver of 37 CFR 1.63 and 1.67 in that they require the filing of a supplemental oath or declaration. The Office apologizes for the delay in responding to the present petition.

The petition is dismissed.

Any request for reconsideration of this decision must be submitted within TWO (2) MONTHS from the mail date of this decision. Extensions of time under 37 CFR 1.136(a) are permitted. **FAILURE TO TIMELY RESPOND WILL RESULT IN ABANDONMENT OF THE APPLICATION.** The reconsideration request should include a cover letter entitled "Renewed Petition Under 1.183."

On 24 January, 2001, the application was filed. A declaration signed by, *inter alia*, C.H. Chou and C.S. Cheng as the third and ninth named inventors, respectively, was filed with the original application papers.

On 19 July, 2002, a non-final Office action was mailed, requiring that each inventor be named by full name, including the family name, and at least one given named without abbreviation together with any other given name or initial.

In response, on 25 September, 2002 (certificate of mailing date 19 September, 2002), the present petition was filed. Petitioners assert that they have sent substitute declarations to joint inventors Chou and Cheng's last known addresses, but that the joint inventors have refused to sign the declaration.

At the outset, a petition under 37 CFR 1.48 is only appropriate when an inventor is being added to or deleted from the inventive

entity. In this case, petitioners do not request that any inventor be added or deleted, but simply state that two inventors are refusing to sign a supplemental oath or declaration under 37 CFR 1.63 and 1.67, and are requesting a waiver of that requirement.

Petitioners' argument has been considered, but is not persuasive. 37 CFR 1.183 permits the Commissioner to waive a rule when extraordinary circumstances exist and justice requires waiver of the rule. Applicant has not shown the existence of any extraordinary circumstances where justice requires waiver of the rule requiring a supplemental oath or declaration. Although it may result in some additional expenditure of resources to obtain the signatures of the inventors on a new oath or declaration, applicants have not shown that any rights will be prejudiced, or that any substantial hardship will result if they are required to comply with the rules.

It is noted that petitioners may request waiver of 37 CFR 1.63 and 1.67 in that they require that an inventor execute a supplemental declaration if the inventors refuse to sign the oath or declaration or cannot be located.

Petitioners should send or give a copy of the declaration in compliance with 37 CFR 1.63 to the joint inventors at their last known addresses, with a request that they sign and return the declaration. If an inventor's signature cannot be obtained, then upon a showing of (1) extraordinary circumstances, such that (2) justice requires, petitioners may seek waiver under 37 CFR 1.183 of that part of the regulation.[1] Petitioners must show that the inability to obtain the signatures of the non-signing inventors is, notwithstanding the exercise of reasonable care and diligence, due to circumstances beyond petitioners' control.[2] If the inventors refuse to sign the supplemental declaration, petitioners should provide proof that the declaration was sent or given to each joint inventor by providing a copy of the cover letter transmitting the declaration to the inventors at their last known addresses or details given in an affidavit or declaration of facts by a person having first-hand knowledge of the details.

---

[1] See MPEP 201.03(B).

[2] Although there is no requirement for a showing under 37 CFR 1.47, it is nevertheless appropriate to apply the principles thereof for showing that an inventor is unavailable or cannot be found to the situation at hand. MPEP 409.03(d).

If the joint inventors refuse in writing to sign the supplemental declaration, a copy of the written refusal should be submitted with any renewed petition. If the refusal was made orally to a person, that person must provide details of the refusal in an affidavit or declaration of facts.

If the declaration is returned as undeliverable, petitioners may provide proof that diligent efforts have been made to locate the joint inventors by providing a copy of an envelope showing that a letter sent to the last known address of the joint inventors was returned as undeliverable by the post office. Details of the efforts made to locate the joint inventors should be set forth in an affidavit or declaration of facts by a person having first hand knowledge of the details. If repeated efforts to contact the joint inventors by telephone, Internet, or mail are unsuccessful, petitioners will have shown that the inventors cannot be reached.

The petition fee of $130.00 has been charged to counsel's deposit account, No. 16-2497, as authorized in the present petition.

Further correspondence with respect to this matter should be addressed as follows:

By mail: Mail Stop Petition
Commissioner for Patents
P.O. Box 1450
Alexandria, VA 22313-1450

By FAX: (703) 308-6916
Attn: Office of Petitions

By hand: Crystal Plaza Four, Suite 3C23
2201 S. Clark Place
Arlington, VA

Telephone inquiries related to this decision should be directed to the undersigned at 703.308.6918.

DWood

Douglas I. Wood
Senior Petitions Attorney
Office of Petitions

UNITED STATES PATENT AND TRADEMARK OFFICE

COMMISSIONER FOR PATENTS
UNITED STATES PATENT AND TRADEMARK OFFICE
P.O. BOX 1450
ALEXANDRIA, VA 22313-1450
www.uspto.gov

Paper No. 14

KEITH KLINE
PRO-TECHTOR INTERNATIONAL SERVICES
20775 NORADA COURT
SARATOGA CA 95070-3018

COPY MAILED

JAN 16 2004

OFFICE OF PETITIONS

In re Application of :
Chen et al. :
Application No. 09/770,081 : ON PETITION
Filed: 24 January, 2001 :
Attorney Docket No. 2011007 :

This is a decision on the renewed petition, filed on 2 January, 2004, which is being treated as a petition filed under 37 CFR 1.183, requesting waiver of 37 CFR 1.63 and 1.67 in that they require the filing of a supplemental oath or declaration. The Office apologizes for the delay in responding to the present petition.

The petition is again DISMISSED.

Any request for reconsideration of this decision must be submitted within TWO (2) MONTHS from the mail date of this decision. Extensions of time under 37 CFR 1.136(a) are permitted. **FAILURE TO TIMELY RESPOND WILL RESULT IN ABANDONMENT OF THE APPLICATION.** The reconsideration request should include a cover letter entitled "Renewed Petition Under 1.183."

On 24 January, 2001, the application was filed. A declaration signed by, *inter alia*, C.H. Chou and C.S. Cheng as the third and ninth named inventors, respectively, was filed with the original application papers.

On 19 July, 2002, a non-final Office action was mailed, requiring that each inventor be named by full name, including the family name, and at least one given named without abbreviation together with any other given name or initial. The petition filed on 25 September, 2002, was dismissed on 28 August, 2002.

The present renewed petition was filed, along with a two (2) month extension of time on 2 January, 2004 (certificate of mailing 29 December, 2003). Petitioners again assert that they have sent substitute declarations to joint inventors Chou and Cheng's last known addresses, but that the joint inventors have

refused to sign the declaration. In support petitioners have provided a copy of the letter sent to each joint inventor requesting that they "come in and sign a supplemental patent declaration," along with an English translation thereof and a statement that the translation is true and accurate. Petitioners have also provided copies of the envelopes transmitting the letter to the inventors. It appears that the inventors have acknowledged receipt of the letters.

Although the letter requests that the inventors contact petitioner regarding signing the declaration, the wording of the letter sent to the inventors suggests that the declaration was not actually sent with the letter to the inventors. Additionally, petitioners have not stated whether the inventors contacted petitioners or made any attempt to contact the assignee. Lastly, although a copy of the envelope sent to inventor C.H. Chou is among the papers filed with the present petition, a review of the papers filed indicates that a copy of the envelope sent to inventor C.S. Cheng is not among the papers filed with the present petition. Proof of mailing to inventor C.S. Cheng should be included with any renewed petition.

Petitioners should provide proof that *the declaration was sent or given to each joint inventor* by providing a copy of the cover letter transmitting the declaration to the inventors at their last known addresses or details given in an affidavit or declaration of facts by a person having first-hand knowledge of the details.

If the joint inventors refuse in writing to sign the supplemental declaration, a copy of the written refusal should be submitted with any renewed petition. If the refusal was made orally to a person, that person must provide details of the refusal in an affidavit or declaration of facts.

If the declaration is returned as undeliverable, petitioners may provide proof that diligent efforts have been made to locate the joint inventors by providing a copy of an envelope showing that a letter sent to the last known address of the joint inventors was returned as undeliverable by the post office. Details of the efforts made to locate the joint inventors should be set forth in an affidavit or declaration of facts by a person having first hand knowledge of the details. If repeated efforts to contact the joint inventors by telephone, Internet, or mail are unsuccessful, petitioners will have shown that the inventors cannot be reached.

Further correspondence with respect to this matter should be addressed as follows:

By mail: Mail Stop Petition
Commissioner for Patents
P.O. Box 1450
Alexandria, VA 22313-1450

By FAX: (703) 872-9306
Attn: Office of Petitions

By hand: U.S. Patent and Trademark Office
2011 South Clark Place
Customer Window
Crystal Plaza 2, Lobby, Room 1B03
Arlington, VA 22202

Telephone inquiries related to this decision should be directed to the undersigned at 703.308.6918.

D Wood

Douglas I. Wood
Senior Petitions Attorney
Office of Petitions

UNITED STATES PATENT AND TRADEMARK OFFICE

COMMISSIONER FOR PATENTS
UNITED STATES PATENT AND TRADEMARK OFFICE
P.O. BOX 1450
ALEXANDRIA, VA 22313-1450
www.uspto.gov
DW 04-04

Paper No. 17

KEITH KLINE
PRO-TECHTOR INTERNATIONAL SERVICES
20775 NORADA COURT
SARATOGA CA 95070-3018

COPY MAILED

APR 2 3 2004

OFFICE OF PETITIONS

In re Application of	:	
Chen et al.	:	
Application No. 09/770,081	:	ON PETITION
Filed: 24 January, 2001	:	
Attorney Docket No. 2011007	:	

This is a decision on the twice renewed petition, filed on 2 January, 2004, which is being treated as a petition filed under 37 CFR 1.183, requesting waiver of 37 CFR 1.63 and 1.67 in that they require the filing of a supplemental oath or declaration. The Office apologizes for the delay in responding to the present petition.

The petition is again DISMISSED.

Any request for reconsideration of this decision must be submitted within TWO (2) MONTHS from the mail date of this decision. Extensions of time under 37 CFR 1.136(a) are permitted. **FAILURE TO TIMELY RESPOND WILL RESULT IN ABANDONMENT OF THE APPLICATION.** The reconsideration request should include a cover letter entitled "Renewed Petition Under 1.183."

On 24 January, 2001, the application was filed. A declaration signed by, *inter alia*, C.H. Chou and C.S. Cheng as the third and ninth named inventors, respectively, was filed with the original application papers.

On 19 July, 2002, a non-final Office action was mailed, requiring that each inventor be named by full name, including the family name, and at least one given named without abbreviation together with any other given name or initial. The petition filed on 25 September, 2002, was dismissed on 28 August, 2002. The renewed petition filed on 2 January, 2004, was dismissed on 16 January, 2004, because petitioners had not provided proof that the supplemental declaration was sent or given to each joint inventor.

A renewed petition was filed, along with a one (1) month extension of time on 16 April, 2004 (certificate of mailing 13 April, 2004). Petitioners again assert that they have sent substitute declarations to joint inventors Chou and Cheng's last known addresses, and that Chou and Cheng have now signed the declaration. Copies of the declarations signed by Chou, Cheng, and several other inventors, respectively, are included with the petition.

The petition must be dismissed because the declarations signed by Yen Chang Huang, Chin Hai Chou, Nai Hua Yeh, and Ching Shui Cheng are is deficient in that they do not reflect the proper inventive entity. Each inventor's declaration submitted with the renewed petition lists that inventor, respectively, as the sole inventor. Petitioners should provide a new oath or declaration in compliance with 37 CFR 1.63 and 1.67, signed by Chou and Cheng, including the citizenship, residence, and mailing address for *each joint inventor* in the proper order.

Further correspondence with respect to this matter should be addressed as follows:

By mail: Mail Stop Petition
Commissioner for Patents
P.O. Box 1450
Alexandria, VA 22313-1450

By FAX: (703) 872-9306
Attn: Office of Petitions

By hand: U.S. Patent and Trademark Office
2011 South Clark Place
Customer Window
Crystal Plaza 2, Lobby, Room 1B03
Arlington, VA 22202

Telephone inquiries related to this decision should be directed to the undersigned at 703.308.6918.

D Wood

Douglas I. Wood
Senior Petitions Attorney
Office of Petitions

UNITED STATES PATENT AND TRADEMARK OFFICE

Commissioner for Patents
United States Patent and Trademark Office
P.O. Box 1450
Alexandria, VA 22313-1450
www.uspto.gov
DIW 07-04

Paper No. 19

KEITH KLINE
PRO-TECHTOR INTERNATIONAL SERVICES
20775 NORADA COURT
SARATOGA CA 95070-3018

COPY MAILED
JUL 1 3 2004
OFFICE OF PETITIONS

In re Application of	:	
Chen et al.	:	
Application No. 09/770,081	:	ON PETITION
Filed: 24 January, 2001	:	
Attorney Docket No. 2011007	:	

This is a decision on the thrice renewed petition, filed on 28 June, 2004, which is being treated as a petition filed under 37 CFR 1.183, requesting waiver of 37 CFR 1.63 and 1.67 in that they require the filing of a supplemental oath or declaration. The Office apologizes for the delay in responding to the present petition.

The petition is again DISMISSED.

Any request for reconsideration of this decision must be submitted within TWO (2) MONTHS from the mail date of this decision. Extensions of time under 37 CFR 1.136(a) are permitted. **FAILURE TO TIMELY RESPOND WILL RESULT IN ABANDONMENT OF THE APPLICATION.** The reconsideration request should include a cover letter entitled "Renewed Petition Under 1.183."

On 24 January, 2001, the application was filed. A declaration signed by, *inter alia*, C.H. Chou and C.S. Cheng as the third and ninth named inventors, respectively, was filed with the original application papers.

On 19 July, 2002, a non-final Office action was mailed, requiring that each inventor be named by full name, including the family name, and at least one given named without abbreviation together with any other given name or initial. The petition filed on 25 September, 2002, was dismissed on 28 August, 2002. The renewed petition filed on 2 January, 2004, was dismissed on 16 January, 2004, because petitioners had not provided proof that the

supplemental declaration was sent or given to each joint inventor. The renewed petition filed on 16 April, 2004, was dismissed on 23 April, 2004, because petitioners had not provided a declaration in compliance with 37 CFR 1.63 and 1.67.

A renewed petition was filed on 28 June, 2004 (certificate of mailing date 22 June, 2004). Petitioners again assert that they have sent substitute declarations to each of the joint inventors. Petitioners further state that while joint inventors Chou, Yen Cheng Huang and Fu Yung Huang have signed new declarations, the other joint inventors have refused to sign the new oath or declaration.

The petition must again be dismissed because, at the outset, the declarations signed by Fu-Yang Huang, Chin Hai Chou, and Yen Cheng Huang are deficient in that they do not reflect the proper inventive entity. Each inventor's declaration submitted with the renewed petition lists that inventor, respectively, as the sole inventor. Petitioners should provide a *single* new oath or declaration in compliance with 37 CFR 1.63 and 1.67, listing all of the inventors in the correct order, signed by Chou and Cheng, and including the citizenship, residence, and mailing address for *each joint inventor* in the proper order.

In this regard, it is noted that the declaration of Jichen Wu listing the names and addresses and telephone numbers of all of the inventors and stating that Mr. Wu was unable to secure the signatures of the other inventors is insufficient because it does not meet the requirements of 37 CFR 1.63 and 1.67.

Furthermore, with regard to the newly recalcitrant inventors, petitioners may request waiver under 37 CFR 1.183 of 37 CFR 1.63 and 1.67 in that they require that an inventor execute a supplemental declaration if the inventors refuse to sign the oath or declaration or cannot be located.

Petitioners should send or give a copy of the declaration in compliance with 37 CFR 1.63 and 1.67 to the joint inventors at their last known addresses, with a request that they sign and return the declaration. If an inventor's signature cannot be obtained, then upon a showing of (1) extraordinary circumstances, such that (2) justice requires, petitioners may seek waiver under 37 CFR 1.183 of that part of the regulation.[1] Petitioners must show that the inability to obtain the signatures of the non-

[1] See MPEP 201.03(B).

signing inventors is, notwithstanding the exercise of reasonable care and diligence, due to circumstances beyond petitioners' control.[2] If the inventors refuse to sign the supplemental declaration, petitioners should provide proof that the declaration was sent or given to each joint inventor by providing a copy of the cover letter transmitting the declaration to the inventors at their last known addresses or details given in an affidavit or declaration of facts by a person having first-hand knowledge of the details.

If the joint inventors refuse in writing to sign the supplemental declaration, a copy of the written refusal should be submitted with any renewed petition. If the refusal was made orally to a person, that person must provide details of the refusal in an affidavit or declaration of facts.

If the declaration is returned as undeliverable, petitioners may provide proof that diligent efforts have been made to locate the joint inventors by providing a copy of an envelope showing that a letter sent to the last known address of the joint inventors was returned as undeliverable by the post office. Details of the efforts made to locate the joint inventors should be set forth in an affidavit or declaration of facts by a person having first hand knowledge of the details. If repeated efforts to contact the joint inventors by telephone, Internet, or mail are unsuccessful, petitioners will have shown that the inventors cannot be reached.

Further correspondence with respect to this matter should be addressed as follows:

By mail: Mail Stop Petition
Commissioner for Patents
P.O. Box 1450
Alexandria, VA 22313-1450

By FAX: (703) 872-9306
Attn: Office of Petitions

---

[2]Although there is no requirement for a showing under 37 CFR 1.47, it is nevertheless appropriate to apply the principles thereof for showing that an inventor is unavailable or cannot be found to the situation at hand. MPEP 409.03(d).

By hand: U.S. Patent and Trademark Office
220 20th Street S.
Customer Window, Mail Stop Petition
Crystal Plaza 2, Lobby, Room 1B03
Arlington, VA 22202

Telephone inquiries related to this decision should be directed to the undersigned at 703.308.6918.

D Wood

Douglas I. Wood
Senior Petitions Attorney
Office of Petitions

UNITED STATES PATENT AND TRADEMARK OFFICE

Commissioner for Patents
United States Patent and Trademark Office
P.O. Box 1450
Alexandria, VA 22313-1450
www.uspto.gov
DIW 10-04

Paper No. 21

KEITH KLINE
PRO-TECHTOR INTERNATIONAL SERVICES
20775 NORADA COURT
SARATOGA CA 95070-3018

COPY MAILED

NOV 0 1 2004

OFFICE OF PETITIONS

In re Application of	:	
Chen et al.	:	
Application No. 09/770,081	:	ON PETITION
Filed: 24 January, 2001	:	
Attorney Docket No. 2011007	:	

This is a decision on the renewed petition, filed on 29 September, 2004 (certificate of mailing date 31 July, 2004), which is being treated as a petition filed under 37 CFR 1.183, requesting waiver of 37 CFR 1.63 and 1.67 in that they require the filing of a supplemental oath or declaration.

The petition is again DISMISSED.

Any request for reconsideration of this decision must be submitted within TWO (2) MONTHS from the mail date of this decision. Extensions of time under 37 CFR 1.136(a) are permitted. **FAILURE TO TIMELY RESPOND WILL RESULT IN ABANDONMENT OF THE APPLICATION.** The reconsideration request should include a cover letter entitled "Renewed Petition Under 1.183."

On 24 January, 2001, the application was filed. A declaration signed by, *inter alia*, C.H. Chou and C.S. Cheng as the third and ninth named inventors, respectively, was filed with the original application papers.

On 19 July, 2002, a non-final Office action was mailed, requiring that each inventor be named by full name, including the family name, and at least one given named without abbreviation together with any other given name or initial. The petition filed on 25 September, 2002, was dismissed on 28 August, 2002. The renewed petition filed on 2 January, 2004, was dismissed on 16 January, 2004, because petitioners had not provided proof that the supplemental declaration was sent or given to each joint inventor. The renewed petition filed on 16 April, 2004, was dismissed on 23 April, 2004, because petitioners had not provided a declaration in compliance with 37 CFR 1.63 and 1.67.

The renewed petition filed on 28 June, 2004 (certificate of mailing date 22 June, 2004) was dismissed on 13 July, 2004, because a proper oath or declaration in compliance with 37 CFR 1.63 and 1.67 had not been provided, and petitioners had not shown that inventors refusing to sign the new declaration had been sent or given a copy of the declaration.

The present renewed petition was filed on 29 September, 2004 (certificate of mailing date 31 July, 2004). Petitioners request relief, asserting that each declaration signed by the joint inventors states that the inventor is a joint inventor, and that obtaining the signature of each inventor on the same sheet of paper poses a substantial hardship.

At the outset, 37 CFR 1.63(a)(2) requires that the oath or declaration identify each inventor by full name. As such, the declaration signed by each inventor must identify the inventive entity (*i.e.*, must contain the names of every inventor). Merely stating that each inventor is a joint inventor is not a proper identification of the inventive entity.

Further, petitioners are correct in noting that the Office does not require that each inventor's signature be on the *same* copy of the oath or declaration. The Office does require, however, that each inventor sign an oath or declaration which lists the names of all of the inventors, in the proper order. In this regard, it is recommended that an oath or declaration in compliance with 37 CFR 1.63 and 1.67, containing the name, citizenship, residence, and mailing address of *each* inventor be prepared, and that a copy of that oath or declaration be sent or given to each inventor with a request that each inventor sign the declaration in his or her respective signature block.

If an inventor refuses to sign the declaration or cannot be located, petitioners should follow the instructions set forth in the previously mailed decisions regarding waiver under 37 CFR 1.183 of 1.63 and 1.67.

Further correspondence with respect to this matter should be addressed as follows:

By mail: Mail Stop Petition
Commissioner for Patents
P.O. Box 1450
Alexandria, VA 22313-1450

By FAX: (703) 872-9306
Attn: Office of Petitions

By hand: U.S. Patent and Trademark Office
220 20th Street S.
Customer Window, Mail Stop Petition
Crystal Plaza 2, Lobby, Room 1B03
Arlington, VA 22202

Telephone inquiries related to this decision should be directed to the undersigned at 571.272.3231.

Douglas I. Wood
Senior Petitions Attorney
Office of Petitions

UNITED STATES PATENT AND TRADEMARK OFFICE

Commissioner for Patents
United States Patent and Trademark Office
P.O. Box 1450
Alexandria, VA 22313-1450
www.uspto.gov
DIW Mar-06

KEITH KLINE
PRO-TECHTOR INTERNATIONAL SERVICES
20775 NORADA COURT
SARATOGA CA 95070-3018

COPY MAILED

MAR 0 6 2006

OFFICE OF PETITIONS

In re Application of	:	
Chen et al.	:	DECISION ON PETITION
Application No. 09/770,081	:	
Filed: 24 January, 2001	:	
Atty Docket No. 2011007	:	

This is a decision on the renewed petition under 37 CFR 1.183, filed on 29 December, 2004, which is being treated as a petition requesting waiver of 1.63 and 1.67 in that they require the signature of all inventors on a supplemental declaration.

The Office apologizes for the delay in responding to the present petition and regrets any inconvenience to petitioners.

The petition is **GRANTED**.

Petitioners have supplied a supplemental declaration in compliance with 37 CFR 1.63 and 1.67 listing all of the named inventors, signed by joint inventors Chin Hai Chou, Chief Lin, and Fu Yung Huang. Additionally, petitioners have provided a declaration by Jichen Wu stating that the declaration was mailed to all of the inventors, but that the non-signing inventors orally refused, via telephone conversations, to sign the supplemental declaration.

In view of the efforts recounted in the petition to obtain the signature of Wen Chuan Chen, Kuo Feng Peng, Allis Chen, Nai Hua Yeh, Yen Cheng Huang, and Ching-Shui Cheng, it is agreed that justice would be served by waiving the requirement for their signatures on the supplemental declaration filed 29 December, 2004.

The aforementioned supplemental declaration has been accepted, on petition, and placed in the file.

Any inquiries concerning this decision may be directed to the undersigned at 571.272.3231.

D Wood

Douglas I. Wood
Senior Petitions Attorney
Office of Petitions

MAR 2 2 2004
PATENT & TRADEMARK OFFICE

PTO/SB/83 (09-03)

REQUEST FOR WITHDRAWAL AS ATTORNEY OR AGENT AND CHANGE OF CORRESPONDENCE ADDRESS

Application Number	09/770,089
Filing Date	January 24, 2001
First Named Inventor	Lewis, Nathan S.
Art Unit	1743
Examiner Name	not yet assigned
Attorney Docket Number	018564-003010US

To: Commissioner for Patents
P.O. Box 1450
Alexandria, VA 22313-1450

Approved
Jmstone
Jacqueline M. Stone, Director
Technology Center 1700
SEP - 2 2004

Please withdraw me as attorney or agent for the above identified patent application, and

☒ all the attorneys/agents of record

☐ all the attorneys/agents (with registration numbers) listed on the attached paper(s), or

☐ all the attorneys/agents associated with Customer Number **20350**

NOTE: This box can only be checked when the power of attorney of record in the application is to all the practitioners associated with a customer number.

The reasons for this request are: at the request of Applicant

CORRESPONDENCE ADDRESS

1. ☐ The correspondence address is NOT affected by this withdrawal.
2. ☒ Change the correspondence address and direct all future correspondence to:

RECEIVED
MAY 0 3 2004
TC 1700

☐ Customer Number

OR

☒ Firm *or* Individual Name	Foley & Lardner				
Address	3000 K Street, N.W.				
Address	Suite 500				
City	Washington	State	D.C.	ZIP	20007
Country	United States of America				
Telephone	202.672.5300	Fax	202.672.5399		
Name	Joseph R. Snyder				
Signature		Registration No.	39,381		
Date	March 18, 2004				

NOTE: Withdrawal is effective when approved rather than when received. Unless there are at least 30 days between approval of withdrawal and the expiration date of a time period for response or possible extension period, the request to withdraw is normally disapproved.

60168319 v1

UNITED STATES PATENT AND TRADEMARK OFFICE

Commissioner for Patents
United States Patent and Trademark Office
P.O. Box 1450
Alexandria, VA 22313-1450
www.uspto.gov

BRIAN LEE WHITWORTH
6032 POMEGRANATE LANE
WOODLAND HILLS, CA 91367

COPY MAILED

NOV 1 0 2004

OFFICE OF PETITIONS

In re Application of	:	
Brian L. Whitworth	:	
Application No. 09/770,150	:	ON PETITION
Filed: January 27, 2001	:	
Attorney Docket No.	:	

This is a decision on the petition under 37 CFR 1.137(b), filed November 3, 2004, to revive the above-identified application.

The petition is **GRANTED**.

The above-identified application became abandoned for failure to reply in a timely manner to the non-final Office action mailed March 18, 2004, which set a shortened statutory period for reply of one (1) month or thirty (30) days (whichever is later). No extensions of time under the provisions of 37 CFR 1.136(a) were obtained. Accordingly, the above-identified application became abandoned on April 19, 2004.

Telephone inquiries concerning this decision should be directed to Irvin Dingle at (571) 272-3210.

The application is being forwarded to Technology Center AU 3627 for further processing.

Irvin Dingle
Petitions Examiner
Office of Petitions
Office of the Deputy Commissioner
for Patent Examination Policy

See for $

Docket No. 2025US

PATENT

OIPE JC165
JUN 1 5 2001
PATENT & TRADEMARK OFFICE

IN THE UNITED STATES PATENT AND TRADEMARK OFFICE

In re application of: Gorlach, Jorn et al

Application No.: 09/770,152 Group No.: 1645
Filed: January 26, 2001 Examiner: Unknown
For: Expressed Sequences of Arabidopsis Thaliana

Box Missing Parts
Assistant Commissioner for Patents
Washington, D.C. 20231

COMPLETION OF FILING REQUIREMENTS
NONPROVISIONAL APPLICATION

I. This replies to the Notice to File Missing Parts of Application (PTO-1533) mailed April 27, 2001.

A copy of the Notice to File Missing Parts of Application--Filing Date Granted (Form PTO-1533) is enclosed.

CERTIFICATE OF MAILING/TRANSMISSION (37 C.F.R. SECTION 1.8(a))

I hereby certify that this correspondence is, on the date shown below, being:

MAILING

[✓] deposited with the United States Postal Service with sufficient postage as first class mail in an envelope addressed to the Assistant Commissioner for Patents, Washington, D.C. 20231.

Date: 6/13/01

FACSIMILE

[ ] transmitted by facsimile to the Patent and Trademark Office at (703) ___ - _____.

Signature

NILMINIE THAMBUGALA
(type or print name of person certifying)

DECLARATION OR OATH

II. Declaration and oath was filed unsigned. Enclosed is the signed original declaration and oath for this application.

COMPLETION FEES

III.

1. Surcharge Fees
   Late payment of filing fee
   and/or late filing of original
   declaration or oath
   (37 C.F.R. Section 1.16(e)) $130.00

Total Completion Fees $130.00

PAYMENT OF FEES

IV. Charge Account No. 50-0885 in the amount of 130.00

A duplicate of this request is attached.

Please charge Account No. 50-0885 for any fees that may be due by this paper.

AUTHORIZATION TO CHARGE ADDITIONAL FEES

V. The Commissioner is hereby authorized to charge the following additional fees that may be required by this paper and during the pendency of this application to Account No. 50-0885.

Respectfully Submitted,

Date: 13 June 2001

Customer No. 022881

Joseph T. Majka
Registration No. 30,570

OIPE JC185
JUN 1 5 2001
PATENT & TRADEMARK OFFICE

UNITED STATES PATENT AND TRADEMARK OFFICE

COMMISSIONER FOR PATENTS
UNITED STATES PATENT AND TRADEMARK OFFICE
WASHINGTON, D.C. 20231
www.uspto.gov

APPLICATION NUMBER	FILING/RECEIPT DATE	FIRST NAMED APPLICANT	ATTORNEY DOCKET NUMBER
09/770,152	01/26/2001	Jorn Gorlach	2025US

CONFIRMATION NO. 7997

FORMALITIES LETTER

OC000000006013634

022881
PARADIGM GENETICS, INC
104 ALEXANDER DRIVE, BUILDING 2
P O BOX 14528
RTP, NC 277094528

Date Mailed: 04/27/2001

NOTICE TO FILE MISSING PARTS OF NONPROVISIONAL APPLICATION

FILED UNDER 37 CFR 1.53(b)

Filing Date Granted

An application number and filing date have been accorded to this application. The item(s) indicated below, however, are missing. Applicant is given **TWO MONTHS** from the date of this Notice within which to file all required items and pay any fees required below to avoid abandonment. Extensions of time may be obtained by filing a petition accompanied by the extension fee under the provisions of 37 CFR 1.136(a).

- The oath or declaration is unsigned.
- To avoid abandonment, a late filing fee or oath or declaration surcharge as set forth in 37 CFR 1.16(e) of $130 for a non-small entity, must be submitted with the missing items identified in this letter.
- **The balance due by applicant is $ 130.**

A copy of this notice MUST be returned with the reply.

Customer Service Center
Initial Patent Examination Division (703) 308-1202
PART 2 - COPY TO BE RETURNED WITH RESPONSE

06/18/2001 ETULU1 00000066 500885 09770152
01 FC:105 130.00 CH

UNITED STATES PATENT AND TRADEMARK OFFICE

COMMISSIONER FOR PATENTS
UNITED STATES PATENT AND TRADEMARK OFFICE
WASHINGTON, D.C. 20231
www.uspto.gov

Paper No. 7

COPY MAILED

AUG 24 2001

OFFICE OF PETITIONS

IBM CORPORATION
2Y7/B656
PO BOX 12195
RESEARCH TRIANGLE PARK, NC 27709

In re Application of Pan, et al. Application No. 09/770,165 Filed: January 26, 2001 Atty. Dkt. No.: RAL919990012 For: NETWORK ROUTER	DECISION GRANTING PETITION UNDER 37 CFR 1.47(a)

This is in response to the petition under 37 CFR 1.47(a), filed June 20, 2001.

The petition is **GRANTED**.

The above-identified application was filed January 26, 2001 without an executed oath or declaration and naming Robert Fung-Chen Pan, Richard Jerome Morris, and Bruce S. Campbell as joint inventors. Accordingly, on March 7, 2001, a Notice to File Missing Parts of Application ("Notice") was mailed, requiring an executed oath or declaration, and a surcharge for its late filing. The instant petition and a request for extension of time were filed in response.

Petitioner has shown that inventor Bruce S. Campbell has refused to join in the filing of the above-identified application after having been presented with the application papers.

The above-identified application and accompanying papers have been reviewed and found in compliance with 37 CFR 1.47(a). This application is hereby **accorded Rule 1.47(a) status**.

As provided in Rule 1.47(a), this Office will forward notice of this application's filing to the non-signing inventor at the address given in the petition. Notice of the filing of this application will also be published in the Official Gazette.

As per the authorization contained in the instant petition, the requisite fees due in connection with this matter have been charged to petitioner's deposit account.

After this decision is mailed, the above-identified application will be returned to the Office of Initial Patent Examination for issuance of a corrected filing receipt.

Telephone inquiries regarding this decision should be directed to Petitions Attorney Alesia M. Brown at (703) 305-0310.

Beverly M. Flanagan
Supervisory Petitions Examiner
Office of Petitions
Office of the Deputy Assistant Commissioner
for Patent Policy and Projects

UNITED STATES PATENT AND TRADEMARK OFFICE

COMMISSIONER FOR PATENTS
UNITED STATES PATENT AND TRADEMARK OFFICE
WASHINGTON, D.C. 20231
www.uspto.gov

COPY MAILED

AUG 2 4 2001

OFFICE OF PETITIONS

Bruce S. Campbell
3555 Sandpebble Dr. #645
San Jose, CA 95136

In re Application of
Pan, et al.
Application No. 09/770,165
Filed: January 26, 2001
Atty. Dkt. No.: RAL919990012
For: NETWORK ROUTER

LETTER

Dear Mr. Campbell:

You are named as the inventor in the above-identified United States patent application filed under the provisions of 35 U.S.C. 116 (United States Code) and 37 C.F.R. § 1.47(a), Rules of Practice in Patent Cases. Should a patent be granted on the application you will be designated therein as a joint inventor.

As a named inventor you are entitled to inspect any paper in the file wrapper of the application, order copies of all or any part thereof (at a prepaid cost as per 37 C.F.R. § 1.19) or make your position of record in the application. Alternatively, you may arrange to do any of the preceding through a registered patent attorney or agent presenting written authorization from you. If you care to join the application, counsel of record (see below) would presumably assist you. Joining in the application would entail the filing of an appropriate oath or declaration by you pursuant to 37 C.F.R. § 1.63.

Telephone inquiries regarding this communication should be directed to Petitions Attorney Alesia M. Brown at (703) 305-0310. Requests for information regarding your application should be directed to the File Information Unit at (703) 308-2733. Information regarding how to pay for and order a copy of the application, or a specific paper in the application, should be directed to Certification Division at (703) 308-9726 or 1-800-972-6382 (outside the Washington D.C. area).

Beverly M. Flanagan
Supervisory Petitions Examiner
Office of Petitions
Office of the Deputy Commissioner
for Patent Examination Policy

CC: IBM CORPORATION
2Y7/B656
PO BOX 12195
RESEARCH TRIANGLE PARK, NC 27709

UNITED STATES PATENT AND TRADEMARK OFFICE

Commissioner for Patents
United States Patent and Trademark Office
P.O. Box 1450
Alexandria, VA 22313-1450
www.uspto.gov

Customer# 58249
COOLEY GODWARD KRONISH LLP
ATTN: PATENT GROUP
SUITE 500
1200 - 19TH STREET, NW
WASHINGTON, DC 20036-2402

COPY MAILED

JUN 29 2007

OFFICE OF PETITIONS

In re Application of	:	
FANKHAUSER, Karl et al.	:	
Application No. 09/770,166	:	DECISION ON PETITION
Filed: January 26, 2001	:	TO WITHDRAW
Attorney Docket No. **QVDX-001/00US**	:	FROM RECORD

This is a decision on the Request to Withdraw as attorney or agent under 37 C.F.R. § 1.36(b) filed March 09, 2007.

The request is **NOT APPROVED**.

A review of the file record indicates that customer number 58249 does not have power of attorney in this patent application. See 37 C.F.R. § 10.40. Accordingly, the request to withdraw under 37 C.F.R. § 1.36(b) is not applicable.

All future communications from the Office will continue to be directed to customer number 22903 until otherwise properly notified by the applicant.

Telephone inquires concerning this decision should be directed to Michelle R. Eason at 571-272-4231.

T. Williams
Terri Williams
Petitions Examiner
Office of Petitions

cc: **CALIFORNIA HEALTHCARE FOUNDATION**
ATTN: JONAH FROHLICH
476 9TH STREET
OAKLAND, CA 94607

UNITED STATES PATENT AND TRADEMARK OFFICE

Commissioner for Patents
United States Patent and Trademark Office
P.O. Box 1450
Alexandria, VA 22313-1450
www.uspto.gov

COPY MAILED

SEP 07 2007

OFFICE OF PETITIONS

COOLEY GODWARD KRONISH LLP
ATTN: PATENT GROUP
Suite 500
1200 - 19th Street, NW
WASHINGTON, DC 20036-2402

In re Application of

FANKHAUSER, Karl et al.
Application No. 09/770,166
Filed: January 26, 2001
Attorney Docket No. **QVDX-001/00US**

DECISION ON PETITION TO WITHDRAW FROM RECORD

This is a decision on the Request to Withdraw as attorney or agent under 37 C.F.R. § 1.36(b) filed July 25, 2007.

The request is **NOT APPROVED**.

A grantable request to withdraw as attorney/agent of record must be signed by every attorney/agent seeking to withdraw or contain a clear indication that one attorney is signing on behalf of another/others. A request to withdraw will not be approved unless at least 30 (thirty) days would remain between the date of approval and the later of the expiration date of a time to file a response or the expiration date of the maximum time period which can be extended under 37 C.F.R. § 1.136(a).

The request cannot be approved because no reasons for withdrawal have been provided. The Office cannot, at this time, determine whether practitioner's request is one of the mandatory or permissive reasons enumerated in 37 CFR 10.40. Any subsequent requests must include reasons for withdrawal. Please note that there is a space provided for on PTO/SB/83 (Request to Withdraw as Attorney or Agent) to supply practitioner's reasons.

All future communications from the Office will continue to be directed to the above-listed address until otherwise notified by applicant.

Telephone inquires concerning this decision should be directed to Michelle R. Eason at 571-272-4231.

T. Williams

Terri Williams
Petitions Examiner
Office of Petitions

cc: **CALIFORNIA HEALTHCARE FOUNDATION**
ATTN: JONAH FROHLICH
476 9TH STREET
OAKLAND, CA 94607

UNITED STATES PATENT AND TRADEMARK OFFICE

Commissioner for Patents
United States Patent and Trademark Office
P.O. Box 1450
Alexandria, VA 22313-1450
www.uspto.gov

APR - 5 2005

HELLER EHRMAN WHITE & MCAULIFFE, LLP
275 MIDDLEFIELD ROAD
MENLO PARK, CA 94025-3506

In re Application of	:
Andrew Saxon et al	:
Serial No.: 09/770,169	: PETITION DECISION
Filed: January 26, 2001	:
Attorney Docket No.: UC053.100A	:

This is in response to the petition under 37 CFR 1.181, filed January 5, 2005, for withdrawal of abandonment of the above identified application based on filing of a timely reply.

A review of the file history shows that the examiner mailed a first Notice to Comply with Sequence Rules on March 4, 2004, setting a one month extendable time period for compliance. Applicants submitted a first CRF sequence listing on April 1, 2004. The listing was found to contain compliance errors. Applicants were notified of the errors in a letter to comply mailed on June 22, 2004, which did not set a new time period but required applicants to reply within the extendable time period set in the previous Office action. Applicants replied anew on August 31, 2004, including a three month extension of time request and fee. The request for extension of time should have been for five months (as measured from March 4, 2004), however in view of the over two month delay by the Office in notifying applicants of non-compliance of the CRF submission, two months are waived. However, the sequence CRF submitted on August 31, 2004, still contained errors as evidenced by the Raw Sequence Listing Error Report dated September 8, 2004. In view of the error report a Notice of Abandonment was mailed to applicants on December 8, 2004, accompanied by the error report.

Applicants then filed this petition and a new copy of the August 31, 2004, amendment and sequence CRF with corrections as mandated by the Error Listing. Applicants argue that the submission of August 31, 2004, was a *bona fide* attempt at furthering prosecution and that the sequence listing was correct except for some sequence type identification errors which have now been corrected. Applicants argue that the examiner should have issued a new requirement for sequence compliance rather than a Notice of Abandonment in view of new errors in the sequence listing not discovered until the listing was submitted. Applicants are correct.

The petition is **GRANTED.** As applicants have submitted a now acceptable sequence listing with this petition the Notice of Abandonment is withdrawn and the application restored to pending status with the mailing of this decision.

The application will be forwarded to the examiner for further consideration.

Should there be any questions about this decision please contact William R. Dixon, Jr., by letter addressed to Director, TC 1600, at the address listed above, or by telephone at 703-272-0519 or by facsimile sent to the general Office facsimile number 571-273-8300.

Jasemine C. Chambers
Director, Technology Center 1600

UNITED STATES PATENT AND TRADEMARK OFFICE

Commissioner for Patents
United States Patent and Trademark Office
P.O. Box 1450
Alexandria, VA 22313-1450
www.uspto.gov

Paper No. 17

Shoemaker & Mattare
10 Post Office Road - Ste. 110
Silver Spring, MD 20910

COPY MAILED

NOV 0 8 2004

OFFICE OF PETITIONS

In re Application of	:	
Anthony Lawrence	:	
Application No. 09/770,185	:	ON PETITION
Filed: January 29, 2001	:	
Attorney Docket No. 4969	:	

This is a decision on the petition under 37 CFR 1.137(b), filed August 26, 2004, to revive the above-identified application.

Petitioner submitted with the instant petition $1,330 for the petition to revive fee, a Request for Continued Prosecution under 37 CFR 1.114, and an Amendment all filed on August 26, 2004. Receipt is also acknowledged of a second Amendment filed October 15, 2004, which is to replace the claims presented in the Amendment filed August 26, 2004.

The petition is **GRANTED**.

The application file is being forwarded to Technology Center Art Unit 3724, for processing the Request for Continued Examination under 37 CFR 1.114, and for review of the Amendment filed October 15, 2004.

Telephone inquiries concerning this decision should be directed to the undersigned at (571) 272-3226.

Andrea Smith
Petitions Examiner
Office of Petitions
Office of the Deputy Commissioner
for Patent Examination Policy

UNITED STATES PATENT AND TRADEMARK OFFICE

UNITED STATES DEPARTMENT OF COMMERCE
United States Patent and Trademark Office
Address: COMMISSIONER FOR PATENTS
P.O. Box 1450
Alexandria, Virginia 22313-1450
www.uspto.gov

APPLICATION NO.	FILING DATE	FIRST NAMED INVENTOR	ATTORNEY DOCKET NO.	CONFIRMATION NO.
09/770,185	01/29/2001	Anthony Lawrence	4969	7308

26936 7590 11/21/2006

SHOEMAKER AND MATTARE, LTD
10 POST OFFICE ROAD - SUITE 110
SILVER SPRING, MD 20910

EXAMINER
FLORES SANCHEZ, OMAR

ART UNIT	PAPER NUMBER
3724	

DATE MAILED: 11/21/2006

Please find below and/or attached an Office communication concerning this application or proceeding.

UNITED STATES PATENT AND TRADEMARK OFFICE

Commissioner for Patents
United States Patent and Trademark Office
P.O. Box 1450
Alexandria, VA 22313-1450
www.uspto.gov

SHOEMAKER AND MATTARE, LTD
10 POST OFFICE ROAD - SUITE 110
SILVER SPRING MD 20910

In re Application of: LAWRENCE, ANTHONY Serial No.: 09/770,185 Filed: Jan. 29, 2001 Docket: 4969 Title: MAIL OPENER APPARATUS	Withdrawal Holding of Abandonment

Art Unit 3724

This is a decision on petitioner's request filed Oct. 13, 2006 to review the holding of abandonment, mailed Oct. 11, 2006 for failure to respond to the Office action of Nov. 3, 2005.

A review of the file indicates that a request for a three-month extension of time and a notice of appeal were filed on May 3, 2006. The appeal brief with four-month extension was also timely filed on Nov. 3, 2006.

In view of the above, the Notice of Abandonment mailed Oct. 11, 2006 is in error and is hereby vacated. The holding of abandonment is withdrawn. This application is being forwarded to the examiner for appropriate action.

Summary: Holding of Abandonment Withdrawn.

Frederick R. Schmidt, Director
Technology Center 3700

UNITED STATES PATENT AND TRADEMARK OFFICE

Commissioner for Patents
United States Patent and Trademark Office
P.O. Box 1450
Alexandria, VA 22313-1450
www.uspto.gov

8-7-06

In re Patent No. 6,802,938 (MOHAN ET AL.)	:	
Issue Date: 10/12/2004	:	**DECISION GRANTING**
Appl No.: 09/770,340	:	**PETITION**
Filed: January 26, 2001	:	*37 CFR 1.324*
For: LOW DENSITY PAPERBOARD ARTICLES	:	
	:	
	:	
	:	

This is a decision on the petition filed January 18, 2006 to correct inventorship under 37 CFR 1.324.

The petition is granted.

The patented file is being forwarded to Certificate of Corrections Branch for issuance of a certificate naming only the actual inventor or inventors.

Steven P. Griffin
Supervisory Patent Examiner
Art Unit 1731
Technology Center 1700

INTERNATIONAL PAPER COMPANY
6285 TRI-RIDGE BOULEVARD
LOVELAND, OH 45140

UNITED STATES PATENT AND TRADEMARK OFFICE

COMMISSIONER FOR PATENTS
UNITED STATES PATENT AND TRADEMARK OFFICE
P.O. BOX 1450
ALEXANDRIA, VA 22313-1450
www.uspto.gov

Paper No. 9

BIRCH, STEWART, KOLASCH & BIRCH, LLP
P.O. BOX 747
FALLS CHURCH, VA 22040-0747

COPY MAILED

OCT 27 2003

OFFICE OF PETITIONS

In re Application of
Goldenburg et al.
Application No. 09/770,369
Filed: January 26, 2001
Attorney Docket No. 4450-0398P

ON PETITION

This is a decision on the petition under 37 C.F.R. § 1.137(b), filed October 9, 2003, to revive the above-identified application.

The petition is **granted.**

This application became abandoned for failure to timely reply within three months to the non-final Office action mailed January 30, 2003. No extensions of time under the provisions of 37 CFR 1.136(a) were obtained. Accordingly, this application became abandoned on May 1, 2003. A Notice of Abandonment was mailed on September 2, 2003.

Petitioner has met the requirements to revive the above-identified application pursuant to 37 CFR 1.137(b).

The file is now being forwarded to Technology Center 2800 for further examination on the merits.

Telephone inquiries should be directed to Paralegal Liana Chase at (703) 306-0482.

Frances Hicks
Petitions Examiner
Office of Petitions
Office of the Deputy Commissioner
for Patent Examination Policy

UNITED STATES PATENT AND TRADEMARK OFFICE

Commissioner for Patents
United States Patent and Trademark Office
P.O. Box 1450
Alexandria, VA 22313-1450
www.uspto.gov

JANE MASSEY LICATA, ESQUIRE
LICATA & TYRRELL, P.C.
66 E. MAIN STREET
MARLTON, NJ 08053

COPY MAILED

MAY 25 2004

OFFICE OF PETITIONS

In re Application of	:	
Huber et al.	:	
Application No. 09/770,410	:	ON PETITION
Filed: January 25, 2001	:	
Attorney Docket No. P-576	:	

This is a decision on the petition under 37 C.F.R. § 1.137(b), filed March 25, 2004, to revive the above-identified application.

The petition is **GRANTED.**

This application became abandoned for failure to timely reply within three months to the non-final Office action mailed October 11, 2002. No extensions of time under the provisions of 37 CFR 1.136(a) were timely obtained. Accordingly, this application became abandoned on January 12, 2003. A Notice of Abandonment was mailed on June 20, 2003.

Petitioner has met the requirements to revive the above-identified application pursuant to 37 CFR 1.137(b).

The terminal disclaimer filed with the instant petition has been accepted and made of record in the above-identified application. The terminal disclaimer was inadvertently charged to petitioner's deposit account twice. Accordingly, the duplicate payment will be credited back.

An extension of time under 37 CFR 1.136 must be filed prior to the expiration of the maximum extendable period for reply. See In re Application of S., 8 USPQ2d 1630, 1631 (Comm'r Pats. 1988). Accordingly, since the $475.00 extension of time fee submitted with the petition on March 25, 2004 was subsequent to the maximum extendable period for reply, this fee is unnecessary and will be credited to petitioner's deposit account as authorized.

This matter is now being forwarded to Technology Center 1700 for further examination on the merits.

Telephone inquiries should be directed to the undersigned at (703) 306-0482.

Liana Chase

Liana Chase
Petitions Examiner
Office of Petitions
Office of the Deputy Commissioner
for Patent Examination Policy

UNITED STATES PATENT AND TRADEMARK OFFICE

Commissioner for Patents
United States Patent and Trademark Office
P.O. Box 1450
Alexandria, VA 22313-1450
www.uspto.gov

**OBLON, SPIVAK, MCCLELLAND,MAIER &
NEUSTADT, P.C.
1940 DUKE STREET
ALESANDRIA VA 22314**

COPY MAILED

DEC 19 2005

OFFICE OF PETITIONS

In re Application of :
Shuichi Fujiwara et al :
Application No. 09/770,415 :
Filed: January 29, 2001 :
Attorney Docket No. 202142US2 CONT :

ON PETITION

This is a decision on the petition, filed December 19, 2005, under 37 CFR 1.313(c)(2) to withdraw the above-identified application from issue after payment of the issue fee.

The petition is **GRANTED.**

The above-identified application is withdrawn from issue for consideration of a submission under 37 CFR 1.114 (request for continued examination). See 37 CFR 1.313(c)(2).

Petitioner is advised that the issue fee paid on October 12, 2005 in the above-identified application cannot be refunded. If, however, the above-identified application is again allowed, petitioner may request that it be applied towards the issue fee required by the new Notice of Allowance.[1]

Telephone inquiries should be directed to the undersigned at (571) 272-3208.

The examiner of Technology Center AU 2673 will consider the request for continued examination under 37 CFR 1.114.

Karen Creasy

Karen Creasy
Petitions Examiner
Office of Petitions
Office of the Deputy Commissioner
for Patent Examination Policy

---

[1] The request to apply the issue fee to the new Notice may be satisfied by completing and returning the new Issue Fee Transmittal Form PTOL-85(b), which includes the following language thereon: "Commissioner for Patents is requested to apply the Issue Fee and Publication Fee (if any) or re-apply any previously paid issue fee to the application identified above." Petitioner is advised that, whether a fee is indicated as being due or not, the Issue Fee Transmittal Form **must** be completed and timely submitted to avoid abandonment. Note the language in bold text on the first page of the Notice of Allowance and Fee(s) Due (PTOL-85).

H-A #4 Sectors

OIPE JC165 JUN 1 5 2001 PATENT & TRADEMARK OFFICE

Docket No. 2028US

PATENT

IN THE UNITED STATES PATENT AND TRADEMARK OFFICE

In re application of: Gorlach, Jorn et al

Application No.: 09/770,423 Group No.: 1653
Filed: January 26, 2001 Examiner: Unknown
For: Expressed Sequences of Arabidopsis Thaliana

Box Missing Parts
Assistant Commissioner for Patents
Washington, D.C. 20231

COMPLETION OF FILING REQUIREMENTS
NONPROVISIONAL APPLICATION

I. This replies to the Notice to File Missing Parts of Application (PTO-1533) mailed April 26, 2001.

A copy of the Notice to File Missing Parts of Application--Filing Date Granted (Form PTO-1533) is enclosed.

CERTIFICATE OF MAILING/TRANSMISSION (37 C.F.R. SECTION 1.8(a))

I hereby certify that this correspondence is, on the date shown below, being:

MAILING

[✓] deposited with the United States Postal Service with sufficient postage as first class mail in an envelope addressed to the Assistant Commissioner for Patents, Washington, D.C. 20231.

Date: 6/13/01

FACSIMILE

[ ] transmitted by facsimile to the Patent and Trademark Office at (703) ___ - _____.

Signature

NILMINIE THAMBUGALA
(type or print name of person certifying)

DECLARATION OR OATH

II. Declaration and oath was filed unsigned. Enclosed is the signed original declaration and oath for this application.

COMPLETION FEES

III.

1. Surcharge Fees
   Late payment of filing fee
   and/or late filing of original
   declaration or oath
   (37 C.F.R. Section 1.16(e)) $130.00

Total Completion Fees $130.00

PAYMENT OF FEES

IV. Charge Account No. 50-0885 in the amount of 130.00

A duplicate of this request is attached.

Please charge Account No. 50-0885 for any fees that may be due by this paper.

AUTHORIZATION TO CHARGE ADDITIONAL FEES

V. The Commissioner is hereby authorized to charge the following additional fees that may be required by this paper and during the pendency of this application to Account No. 50-0885.

Respectfully Submitted,

Date: 13 June 2001

Customer No. 022881

Joseph T. Majka
Registration No. 30,570

OIPE JC135
JUN 1 5 2001
PATENT & TRADEMARK OFFICE

UNITED STATES PATENT AND TRADEMARK OFFICE

COMMISSIONER FOR PATENTS
UNITED STATES PATENT AND TRADEMARK OFFICE
WASHINGTON, D.C. 20231
www.uspto.gov

APPLICATION NUMBER	FILING/RECEIPT DATE	FIRST NAMED APPLICANT	ATTORNEY DOCKET NUMBER
09/770,423	01/26/2001	Jorn Gorlach	2028US

CONFIRMATION NO. 7062

FORMALITIES LETTER

OC000000006011615

022881
PARADIGM GENETICS, INC
104 ALEXANDER DRIVE, BUILDING 2
P O BOX 14528
RTP, NC 277094528

Date Mailed: 04/26/2001

NOTICE TO FILE MISSING PARTS OF NONPROVISIONAL APPLICATION

FILED UNDER 37 CFR 1.53(b)

Filing Date Granted

An application number and filing date have been accorded to this application. The item(s) indicated below, however, are missing. Applicant is given **TWO MONTHS** from the date of this Notice within which to file all required items and pay any fees required below to avoid abandonment. Extensions of time may be obtained by filing a petition accompanied by the extension fee under the provisions of 37 CFR 1.136(a).

- The oath or declaration is unsigned.
- To avoid abandonment, a late filing fee or oath or declaration surcharge as set forth in 37 CFR 1.16(e) of $130 for a non-small entity, must be submitted with the missing items identified in this letter.
- **The balance due by applicant is $ 130.**

A copy of this notice MUST be returned with the reply.

Customer Service Center
Initial Patent Examination Division (703) 308-1202
PART 2 - COPY TO BE RETURNED WITH RESPONSE

05/10/2001 ETULUI 00000063 500855 09770423
01 FC:105 130.00 CH

#4

OIPE JC105
JUN 1 5 2001
PATENT & TRADEMARK

UNITED STATES PATENT AND TRADEMARK OFFICE

COMMISSIONER FOR PATENTS
UNITED STATES PATENT AND TRADEMARK OFFICE
WASHINGTON, D.C. 20231
www.uspto.gov

APPLICATION NUMBER	FILING/RECEIPT DATE	FIRST NAMED APPLICANT	ATTORNEY DOCKET NUMBER
09/770,445	01/26/2001	Jorn Gorlach	2023US

CONFIRMATION NO. 8079

022881
PARADIGM GENETICS, INC
104 ALEXANDER DRIVE, BUILDING 2
P O BOX 14528
RTP, NC 277094528

FORMALITIES LETTER

OC000000005891641

Date Mailed: 03/22/2001

NOTICE TO FILE MISSING PARTS OF NONPROVISIONAL APPLICATION

FILED UNDER 37 CFR 1.53(b)

Filing Date Granted

An application number and filing date have been accorded to this application. The item(s) indicated below, however, are missing. Applicant is given TWO MONTHS from the date of this Notice within which to file all required items and pay any fees required below to avoid abandonment. Extensions of time may be obtained by filing a petition accompanied by the extension fee under the provisions of 37 CFR 1.136(a).

- The oath or declaration is unsigned.
- To avoid abandonment, a late filing fee or oath or declaration surcharge as set forth in 37 CFR 1.16(e) of $130 for a non-small entity, must be submitted with the missing items identified in this letter.
- **The balance due by applicant is $ 130.**

A copy of this notice MUST be returned with the reply.

Customer Service Center
Initial Patent Examination Division (703) 308-1202
PART 2 - COPY TO BE RETURNED WITH RESPONSE

06/18/2001 ETULU1 00000064 500885 09770445
01 FC:105 130.00 CH

UNITED STATES PATENT AND TRADEMARK OFFICE

COMMISSIONER FOR PATENT
UNITED STATES PATENT AND TRADEMARK OFFIC
WASHINGTON, D.C. 20231
www.uspto.go

FINNEGAN, HENDERSON, FARABOW, GARRETT &
DUNNER LLP
1300 I STREET, NW
WASHINGTON DC 20005

PROCESSED BY
PG PUB DIVISION

JUN 18 2002

Applicant: Michel Philippe et al.
Appl. No.: 09/770,473
Filing Date: January 29, 2001
Title: USE OF POLYAMINO ACID DERIVATIVES TO TREAT SEBORRHOEA AND THE ASSOCIATED SKIN DISORDERS
Attorney Docket No.: 5725.0834-00
Pub. No.: US 2001/0043935 A1
Pub. Date: November 22, 2001

This is a decision on the request for corrected patent application publication under 37 CFR 1.221(b), filed on January 22, 2001 for the above-identified application.

The request is granted.

The corrected patent application publication will be published in due course.

Inquires concerning this communication should be directed to Mark Polutta at (703) 308-8122 (voice) or (703) 746-3465 (facsimile).

Mark O. Polutta

Mark O. Polutta
Office of Patent Legal Administration
Office of the Deputy Commissioner
for Patent Examination Policy

UNITED STATES PATENT AND TRADEMARK OFFICE

Commissioner for Patents
United States Patent and Trademark Office
Washington, D.C. 20231
www.uspto.gov

Paper No. 12

George R. McGuire
Hancock and Estabrook, LLP
P. O. Box 4976
Syracuse, NY 1322-4976

COPY MAILED

AUG 2 6 2002

OFFICE OF PETITIONS

In re Application of
James R. Del Signore, II, et al.
Application No. 09/770,478
Filed: January 29, 2001
Attorney Docket No. 230 P 051

: DECISION GRANTING PETITION
: UNDER 37 CFR 1.137(f) AND NOTICE
: RESETTING PERIOD FOR REPLY TO
: FINAL OFFICE ACTION
:

This is a decision on the petition filed July 29, 2002, to revive the instant nonprovisional application under the unintentional provisions of 37 CFR 1.137(f).

The petition is **GRANTED**.

The instant non-provisional application is the subject of an application filed in a foreign country on December 6, 2001. However, the U. S. Patent and Trademark Office (Office) was unintentionally not notified of this filing within 45 days subsequent to the filing of the subject application in a foreign country.

In view of the above, this application became abandoned pursuant to 35 U. S. C. § 122(b)(2)(B)(iii) and 37 CFR 1.213(c) for failure to timely notify the Office of the filing of an international agreement, that requires publication of applications 18 months after filing.

A petition under 37 CFR 1.137(f) must be accompanied by:

(1) the reply which is met by notification of such filing in a foreign country or under a multinational treaty;

(2) the petition fee as set forth in 37 CFR 1.17(m); and

(3) a statement that the entire delay in filing the required reply from the due date for the reply until the filing of a grantable petition was unintentional.

The instant petition has been found in compliance with the 37 CFR 1.137(f). Accordingly, the failure to timely notify the Office of a foreign or international filing within 45 days as provided by 35 USC 122(b)(2)(B)(iii) and 37 CFR 1.213(c) is accepted as having been unintentionally delayed.

The previous Request and Certification under 35 USC 122(b)(2)(B)(i) has been rescinded. A Corrected Filing Receipt which sets forth the projected publication date of November 28, 2002 accompanies this decision on petition.

There is no indication that a reply to the Office action of May 31, 2002 has been filed. Accordingly, the period for reply to that Office action is restarted with the mailing date of this decision. Extensions of time pursuant to the provisions of 37 CFR 1.136(a) are permitted. Failure to timely reply within the period restarted by this decision will result in the abandonment of this application.

Telephone inquiries concerning this decision should be directed to Marianne Morgan at (703) 306-3475.

The application file is being forwarded to Technology Center Art Unit 2816 to await a reply to the final Office action, the period of which is restarted to run from the mailing date of this decision on petition as noted above.

Frances Hicks

Frances M. Hicks
Lead Petitions Examiner
Office of Petitions
Office of the Deputy Commissioner
for Patent Examination Policy

ATTACHMENT: Corrected Filing Receipt

UNITED STATES PATENT AND TRADEMARK OFFICE

COMMISSIONER FOR PATENTS
UNITED STATES PATENT AND TRADEMARK OFFICE
P.O. BOX 1450
ALEXANDRIA, VA 22313-1450
WWW.USPTO.GOV

COPY MAILED

AUG 2 2 2005

OFFICE OF PETITIONS

BOND, SCHOENECK & KING, PLLC
ONE LINCOLN CENTER
SYRACUSE NY 13202-1355

In re Application of
DEL SIGNORE
Application No.: 09/770,478
Attorney Docket No.: 230 P 051

: DECISION on PETITION
:
: UNDER 37 CFR 1.137(b)
:

This is a decision on the petition under 37 CFR 1.137(b), filed September 14, 2004 to revive the above-identified application.

The petition is **GRANTED**.

The above-identified application became abandoned for failure to submit the issue and publication fees in a timely manner in reply to the Notice of Allowance mailed June 25, 2003, which set a statutory period for reply of three (3) months. Accordingly, the above-identified application became abandoned at midnight on September 25, 2003.

The petition satisfies the conditions for revival pursuant to the provisions of 37 CFR 1.137(b) in that (1) the reply in the form of payment of the issue and publication fees, (2) the petition fee; and (3) the required statement of unintentional delay have been received. Accordingly, the issue and publication fees are accepted as having been unintentionally delayed.

The application is being referred to Publishing Division.

Telephone inquiries concerning this decision should be directed to Cynthia Kratz at (571) 272-3286 or in her absence, the undersigned at (571) 272-3217.

Frances Hicks for
Brian Hearn
Petitions Examiner
Office of Petitions

UNITED STATES PATENT AND TRADEMARK OFFICE

COMMISSIONER FOR PATENTS
UNITED STATES PATENT AND TRADEMARK OFFICE
WASHINGTON, D.C. 20231
www.uspto.gov

Paper No. 5

MOTOROLA, INC.
INTELLECTUAL PROPERTY LAW DEPT.
8000 WEST SUNRISE BLVD.
FT. LAUDERDALE, FL 33322

COPY MAILED

APR 2 5 2003

OFFICE OF PETITIONS

ON PETITION

In re Application of :
Kelley, et al. :
Application No. 09/770,486 :
Filed: January 29, 2001 :
Attorney Docket No. CM01465L :

This is a decision on the styled, "Second Petition Under 37 C.F.R. 1.182," filed August 23, 2001, requesting the issuance of a corrected filing receipt.

The petition is **GRANTED**.

Applicant states:

--
Change the number of claims filed from "9" total claims and from "1" independent claim to:

Total claims filed: **14**

Independent claims filed: **3**
--

The above claim information is confirmed by review of the application file.

The $130.00 petition fee, submitted August 23, 2001, will be credited to deposit account no. 50-0757.

This application is being forwarded to the Office of Initial Patent Examination for issuance of the requested corrected filing receipt. Thereafter, the application will be forwarded to Technology Center 1700 for examination in due course.

Telephone inquiries concerning this matter may be directed to the undersigned at (703) 306-9200.

Edward J. Tannouse
Petitions Attorney
Office of Petitions
United States Patent and Trademark Office

UNITED STATES PATENT AND TRADEMARK OFFICE

Commissioner for Patents
United States Patent and Trademark Office
Washington, D.C. 20231
www.uspto.gov
OIW 09-01

Paper No. 5

KNOBBE MARTENS OLSON & BEAR LLP
620 NEWPORT CENTER DRIVE
SIXTEENTH FLOOR
NEWPORT BEACH, CA 92660

COPY MAILED

SEP 1 0 2001

OFFICE OF PETITIONS

In re Application of	:
Fumi Katagiri	: DECISION DISMISSING
Application No. 09/770,509	: PETITION
Filed: 25 January, 2001	:
Attorney Docket No. NADII.018A	:

This is a decision on the petition filed on 11 June, 2001, requesting that the above identified application be accorded a filing date of 25 January, 2001, with seven (7) sheets of drawings containing three (3) drawing figures.

The application was filed on 25 January, 2001. On 9 May, 2001, however, Initial Patent Examination Division mailed a Notice of Incomplete Nonprovisional Application, stating that the application had been deposited without drawings. Additionally, petitioner was informed that the statutory basic filing fee, additional claims fees, the oath or declaration, and a paper copy of the Sequence Listing were required. A two (2)-month period for reply was set.

The present petition argues that 7 sheets of drawings containing 3 figures were filed on 25 January, 2001. In support, the petition is accompanied by a copy of 7 sheets of drawings, a copy of a certificate of mailing by Express Mail and a copy of the application transmittal letter.

The argument is not persuasive. The USPTO file is the official record of the papers originally filed in this application. A review of the official file reveals that no sheets of drawings were filed on 25 January, 2001, since no drawings are present in the file. An applicant alleging that a paper was filed in the

USPTO and later misplaced has the burden of proving the allegation by a preponderance of the evidence. The only evidence relied on to support petitioner's allegation is the application transmittal letter and the certificate of mailing by Express Mail. The listing of papers on an application transmittal letter or in a certificate of mailing is not sufficient evidence that a paper so listed was actually filed in the USPTO.

The USPTO has a well established and well publicized practice of providing a receipt for papers filed in the USPTO to any applicant desiring a receipt. The practice requires that any paper for which a receipt is desired be filed in the USPTO with a self-addressed postcard identifying the paper. A postcard receipt which itemizes and properly identifies the papers which are being filed serves as prima facie evidence of receipt in the USPTO of all the items listed thereon on the date stamped thereon by the USPTO. See section 503, Manual Of Patent Examining Procedure (MPEP 503).

Unfortunately, in this case, petitioner failed to list 7 sheets of drawings on the return postcard. Therefore, it is not evidence that 7 sheets were filed on 25 January, 2001.

It is noted that the present application contains process or method claims. It has been PTO practice to treat an application that contains at least one process or method claim as an application for which a drawing is not necessary for an understanding of the invention under 35 U.S.C. 113 (first sentence). Since the application was filed with at least one claim directed to a process or method, the application should have been treated as an application for which a drawing is not necessary and Initial Patent Examination Division should have mailed a "Notice Of Omitted Item(s)." See MPEP § 601.01(f).

In view of the above, the Notice mailed 9 May, 2001, is hereby withdrawn. The application is accorded a filing date of 25 January, 2001, without drawings.

The petition is granted to the extent indicated above.

Receipt is acknowledged of the authorization to charge fees to a deposit account filed on June 11, 2001. The $710.00 basic filing fee and $1,198.00 for additional claim fees have been charged to the deposit account.

The application was filed on 25 January, 2001, without a signed oath/declaration in compliance with 37 CFR 1.63 or the paper or compact disc copy of the "Sequence Listing" required by 37 CFR 1.821(c).[1]

Applicant is given TWO MONTHS from the mailing date of this decision to file a signed oath/declaration in compliance with 37 CFR 1.63 and a paper or compact disc copy of the "Sequence Listing," as well as an amendment directing its entry into the specification and a statement that the submission includes no new matter. See 37 CFR 1.821(g). This time period may be extended pursuant to 37 CFR 1.136(a). Failure to comply with these requirements will result in the abandonment of the application.

Since the application was filed on 25 January, 2001, without the basic filing fee or a signed oath/declaration, the $130.00 surcharge set forth in 37 CFR 1.16(e) is required and has been charged to deposit account No. 11-1410.

The application is being returned to the Office of Initial Patent Examination to await the response required above and for further processing with a filing date of 25 January, 2001, including an indication in USPTO records that "0" sheets of drawings were present on filing.

Telephone inquiries specific to this matter should be directed to Petitions Attorney Douglas I. Wood at (703) 308-6918.

Beverly M. Flanagan
Supervisory Petitions Examiner
Office of Petitions
Office of the Deputy Commissioner
for Patent Examination Policy

[1] Only the copy of the "Sequence Listing" in computer readable form (37 CFR 1.821(e)) was filed on 25 January, 2001.

UNITED STATES PATENT AND TRADEMARK OFFICE

COMMISSIONER FOR PATENTS
UNITED STATES PATENT AND TRADEMARK OFFICE
WASHINGTON, D.C. 20231
www.uspto.gov

Paper No. 9

Donna L. Angotti
SCHULTE ROTH & ZABEL LLP
919 Third Avenue
New York, NY 10017

MAY 24 2002

In re Application of: Michael HRABIK, et al. Application No. 09/770,525 Filed: January 24, 2001 For: INTERNET MONITORING SOFTWARE	))))))	DECISION ON PETITION TO MAKE SPECIAL UNDER M.P.E.P. §708.02(II): INFRINGEMENT

This is a decision on the petition, filed February 21, 2002, under 37 C.F.R. §1.102(d) and M.P.E.P. §708.02(II): Infringement, to make the above-identified application special.

A grantable petition under 37 C.F.R. §1.102(d), and M.P.E.P. §708.02, Section II, must be accompanied by payment of the fee under 37 C.F.R.§1.117(i) and a statement under 37 C.F.R. §1.102 by the applicant or assignee or statements by an attorney/agent registered to practice before the Patent and Trademark Office that (A) there is an infringing device or product actually on the market or method in use; (B) a ***rigid comparison*** of the alleged infringing device, product, or method with the claims of the application has been made, and that, in his or her opinion, some of the claims are **unquestionably infringed**: and (C) he or she has made or caused to be made a careful and thorough search of the prior art or has a good knowledge of the prior art. Applicant must provide one copy of each of the ***references deemed most closely related*** to the subject matter encompassed by the claims.

Applicant's submission meets all the criteria set out above. Accordingly, the Petition is **GRANTED**.

The application file is being forwarded to the Examiner of Record for expedited examination.

Vincent N. Trans
Special Programs Examiner
Technology Center 2100
Computer Architecture, Software, and
Electronic Commerce
(703) 305-9750

UNITED STATES PATENT AND TRADEMARK OFFICE

COMMISSIONER FOR PATENTS
UNITED STATES PATENT AND TRADEMARK OFFICE
P.O. BOX 1450
ALEXANDRIA, VA 22313-1450
www.uspto.gov

Paper No. 10

FERNANDEZ & ASSOCIATES, LLP
Patent Attorneys
P.O. Box D
Menlo Park, CA 94026-6402

OCT 31 2003

In re Application of:	:	
BANERJEE *et al.*	:	
Serial No.: 09/770,541	:	DECISION ON REQUEST TO WITHDRAW FROM RECORD
Filed: January 26, 2001	:	
Attorney Docket No.: **HWU-P001**	:	

This is a decision on the request to withdraw as attorney of record under 37 C.F.R. § 1.36, filed July 21, 2003.

The request is **DISMISSED** as moot.

A review of the application file record reveals a proper revocation and power of attorney to Deepti Panchawagh-Jain, was filed on August 04, 2003. As such, the power of attorney for the attorneys and agents requesting withdrawal has already been revoked. Accordingly, the present request is moot, and must be dismissed.

All future communications form the Office will continue to be directed to the below-listed address until otherwise notified by applicant.

Inquiries related to this decision should be directed to Clayton E. LaBalle at (703) 308-0519.

Clayton E. LaBalle, Special Programs Examiner
Technology Center 2800
Semiconductors, Electrical and Optical
Systems and Components

Enclosure: Copy of Request for Withdrawal as Attorney or Agent for the application file maintained by the attorneys of record.

cc: The Law Office of Deepti Panchawagh-Jain
3039 Calle De Las Estrella
San Jose, CA 95148

UNITED STATES PATENT AND TRADEMARK OFFICE

Commissioner for Patents
United States Patent and Trademark Office
P.O. Box 1450
Alexandria, VA 22313-1450
www.uspto.gov

QWEST COMMUNICATIONS INTERNATIONAL INC
LAW DEPT INTELLECTUAL PROPERTY GROUP
1801 CALIFORNIA STREET, SUITE 3800
DENVER, CO 80202

COPY MAILED

SEP 23 2005

OFFICE OF PETITIONS

In re Application of :
Brian L. Arend et al :
Application No. 09/770,551 :
Filed: January 26, 2001 :
Attorney Docket No. 1801/USW0596PUS :

ON PETITION

This is a decision on the petition under 37 CFR 1.137(b), filed August 24, 2005, to revive the above-identified application.

The petition is **GRANTED**.

The file does not indicate a change of address has been submitted, although the address given on the petition differs from the address of record. If appropriate, a change of address should be filed in accordance with MPEP 601.03. A courtesy copy of this decision is being mailed to the address given on the petition; however, the Office will mail all future correspondence solely to the address of record.

Telephone inquiries concerning this decision should be directed to Irvin Dingle at (571) 272-3210.

This matter is being forwarded to Technology Center AU 2600 for further processing.

Irvin Dingle
Petitions Examiner
Office of Petitions

cc:

Mark D. Chuey
Brooks Kushman P.C.
1000 Town Center, 22nd Floor
Southfield, MI 48075-1238

UNITED STATES PATENT AND TRADEMARK OFFICE

UNITED STATES DEPARTMENT OF COMMERCE
United States Patent and Trademark Office
Address: COMMISSIONER FOR PATENTS
P.O. Box 1450
Alexandria, Virginia 22313-1450
www.uspto.gov

Qwest Communications International Inc.
1801 California St., #900
Denver, CO 80202

Mail Date: 04/21/2010

Applicant	: Brian L. Arend	: DECISION ON REQUEST FOR
Patent Number	: 7653385	: RECALCULATION of PATENT
Issue Date	: 01/26/2010	: TERM ADJUSTMENT IN VIEW
Appliction No	: 09/770,551	: OF WYETH AND NOTICE OF INTENT TO
Filed	: 01/26/2001	: ISSUE CERTIFICATE OF CORRECTION
		:

The Request for Recalculation is **GRANTED** to the extent indicated.

The patent term adjustment has been determined to be **1984** days. The USPTO will *sua sponte* issue a certificate of correction reflecting the amount of PTA days determined by the recalculation.

Prior to the issuance of the certificate of correction, the USPTO will afford patentee an opportunity to be heard and request reconsideration. Accordingly, patentee has **one month or thirty (30) days**, whichever is longer, to file a request for reconsideration of this patent term adjustment calculation. See 35 U.S.C. 154(b)(3)(B)(ii) and 37 CFR 1.322(a)(4). No extensions of time will be granted under 37 CFR 1.136.

Patentee should use document code PET.OP if electronically filing a request for reconsideration of this patent term adjustment calculation. The patentee must also include the information required by 37 CFR 1.705(b)(2) and the fee required by 37 CFR 1.18(e). If patentee does not file a timely request for reconsideration of this patent term adjustment calculation including the information required by 37 CFR 1.705(b)(2) and the fee required by 37 CFR 1.18(e), the USPTO will issue a certificate of correction reflecting the PTA determination noted above.

Patentee should be aware that in order to preserve the right to review in the United States District Court for the District of Columbia of the USPTO patent term adjustment determination, patentee must ensure that he or she also take the steps required under 35 U.S.C. 154(b)(4)(A) in a timely manner. Nothing in the request for recalculation should be construed as providing an alternative time frame for commencing a civil action under 35 U.S.C. 154(b)(4)(A).

Any questions concerning this decision should be directed to the Office of Patent Legal Administration at 571-272-7702.

UNITED STATES PATENT AND TRADEMARK OFFICE

Commissioner for Patents
United States Patent and Trademark Office
P.O. Box 1450
Alexandria, VA 22313-1450
www.uspto.gov

PIONEER HI-BRED INTERNATIONAL INC
CORPORATE INTELLECTUAL PROPERTY
7100 N.W. 62ND AVENUE
JOHNSTON, IA 50131-1000

COPY MAILED
MAR 14 2006
OFFICE OF PETITIONS

In re Patent No. 6,835,569	:	
Issue Date: December 28, 2004	:	
Application No. 09/770,564	:	ON PETITION
Filed: January 26, 2001	:	
Attorney Docket No. P05569US2	:	

This is a decision on the petition under 37 CFR 3.81(b), filed January 27, 2005, to add the second assignee name on the front page of the above-identified patent by way of a Certificate of Correction.

The petition is **GRANTED**.

The patent file is being forwarded to the Certificates of Correction Branch for issuance of the requested Certificate of Correction.

Telephone inquiries concerning this decision may be directed to the undersigned at (571) 272-3220. Inquiries regarding the issuance of a certificate of correction should be directed to the Certificate of Correction Branch at (703) 305-8309.

Wan Laymon
Petitions Examiner
Office of Petitions

UNITED STATES PATENT AND TRADEMARK OFFICE

Commissioner for Patents
United States Patent and Trademark Office
P.O. Box 1450
Alexandria, VA 22313-1450
www.uspto.gov

GREENBLUM & BERNSTEIN, P.L.C.
1950 ROLAND CLARKE PLACE
RESTON VA 20191

COPY MAILED

SEP 3 0 2005

OFFICE OF PETITIONS

In re Patent No. 6,885,760	:	
Application No. 09/770,639	:	
Filed: January 29, 2001	:	ON PETITION
Issued: April 26, 2005	:	
Attorney Docket No. P20526.A20	:	

This is a decision on the petition filed August 5, 2005, which is being treated as a request under 37 CFR 3.81[1] to correct the assignee on the front page of the above-identified patent by way of a Certificate of Correction.

The request under 37 CFR 3.81 is **GRANTED**.

Telephone inquiries should be directed to Paralegal Liana Chase at (571) 272-3282. Any questions concerning the issuance of the Certificate of Correction should be directed to the Certificate of Corrections Branch at (703) 305-8309.

This matter is being referred to the Certificates of Correction Branch for issuance of the requested Certificate of Correction.

Frances Hicks
Petitions Examiner
Office of Petitions

[1] See Official Gazette of June 22, 2004

UNITED STATES PATENT AND TRADEMARK OFFICE

Commissioner for Patents
United States Patent and Trademark Office
P.O. Box 1450
Alexandria, VA 22313-1450
www.uspto.gov

Paper No. 26

LEXICON GENETICS INCORPORATED
8800 TECHNOLOGY FOREST PLACE
THE WOODLANDS TX 77381-1160

COPY MAILED

FEB 2 4 2005

OFFICE OF PETITIONS

In re Application of	:	
Turner et al	:	
Application No. 09/770,643	:	ON PETITION
Filed: January 26, 2001	:	
Attorney Docket No. LEX-0122-USA	:	

This is a decision on the petition under 37 CFR 1.137(b), filed December 6, 2004, to revive the above-identified application.

The petition is **GRANTED**.

37 CFR 1.137(b)(3) requires a statement that the entire delay in filing the required reply from the due date for the reply until the filing of a grantable petition pursuant to 37 CFR 1.137(b) was unintentional. If the statement contained in the instant petition varies from the language required by 37 CFR 1.137(b)(3), the statement contained in the instant petition is being construed as the statement required by 37 CFR 1.137(b)(3) and petitioner must notify the Office if this is **not** a correct interpretation of the statement contained in the instant petition.

The above-identified application is being revived solely for purposes of continuity. As continuity has been established by this decision reviving the above-identified application, the above-identified application is again abandoned in favor of continuing application No. 10/999,233, filed November 29, 2004 .

Telephone inquiries concerning this decision should be directed to the undersigned at (571) 272-3208.

The application file is being forwarded to Files Repository.

Karen Creasy

Karen Creasy
Petitions Examiner
Office of Petitions
Office of the Deputy Commissioner
for Patent Examination Policy

UNITED STATES PATENT AND TRADEMARK OFFICE

Commissioner for Patents
United States Patent and Trademark Office
P.O. Box 1450
Alexandria, VA 22313-1450
www.uspto.gov

TOWNSEND AND TOWNSEND AND CREW LLP
TWO EMBARCADERO CENTER, 8TH FLOOR
SAN FRANCISCO, CA 94111-3834

COPY MAILED
JUN 15 2006
OFFICE OF PETITIONS

In re Application of	:	
Wright et al.	:	DECISION ON PETITION
Application No. 09/770,762	:	TO WITHDRAW
Filed: January 25, 2001	:	FROM RECORD
Attorney Docket No. 50269-0745	:	

This is a decision on the Request to Withdraw as attorney or agent of record under 37 C.F.R. § 1.36(b), filed November 3, 2005.

The request is **NOT APPROVED** as moot.

A review of the file record indicates that the power of attorney to the attorneys associated with Customer Number 20350 has been revoked by the assignee of the entire interest of the patent application. Accordingly, the request to withdraw under 37 C.F.R. § 1.36(b) is moot.

All future communications from the Office will continue to be directed to the below-listed address until otherwise notified by applicants.

Telephone inquires concerning this decision should be directed to Petitions Examiner Liana Chase at 571-272- 3206. All other inquires concerning either the examination or status of the application should be directed to the Technology Center.

David Bucci
Petitions Examiner
Office of Petitions

cc:

HICKMAN PALERMO TRUONG & BECKER, LLP
2055 GATEWAY PLACE
SUITE 550
SAN JOSE CA 95110

SPE RESPONSE FOR CERTIFICATE OF CORRECTION

Paper No.: 2/27/06

DATE : February 8, 2006

TO SPE OF : ART UNIT 2635

SUBJECT : Request for Certificate of Correction on Patent No.: 6,960,985/Appl. 09/770,783

A response is requested with respect to the accompanying request for a certificate of correction.

Please complete this form and return with file, within 7 days to:
Palm location **7580, Certificates of Correction Branch – South Tower – 9A22**
If response is for an IFW, **return to employee (named below) via PUBSCofC Team in MADRAS.**
With respect to the change(s) requested, correcting Office and/or Applicant's errors, should the patent read as shown in the certificate of correction (COCIN)? No new matter should be introduced, nor should the scope or meaning of the claims be changed.

Magdalene Talley

Thank You For Your Assistance

Certificates of Correction Branch
Tel. No. 703-308-9309 ext. 116

The request for issuing the above-identified correction(s) is hereby:
Note your decision on the appropriate box.

- ☑ **Approved** — All changes apply.
- ☐ **Approved in Part** — Specify below which changes **do not** apply.
- ☐ **Denied** — State the reasons for denial below.

Comments:

SPE

2635
Art Unit

PTOL-306 (REV. 7/03)

U.S. DEPARTMENT OF COMMERCE Patent and Trademark Office

UNITED STATES PATENT AND TRADEMARK OFFICE

Commissioner for Patents
United States Patent and Trademark Office
P.O. Box 1450
Alexandria, VA 22313-1450
www.uspto.gov

COPY MAILED

NOV 05 2007

OFFICE OF PETITIONS

MINTZ, LEVIN, COHN, FERRIS, GLOVSKY
AND POPEO, PC
ONE FINANCIAL CENTER
BOSTON, MA 02111

In re Application of	:	
Syed Kamal H. Jaffrey	:	
Application No. 09/770,810	:	DECISION ON PETITION
Filed: January 26, 2001	:	TO WITHDRAW
Attorney Docket No. 20336-006	:	FROM RECORD
	:	

This is a decision on the Request to Withdraw as attorney or agent of record under 37 C.F.R. § 1.36(b), filed June 18, 2007.

The request is **APPROVED**.

A grantable request to withdraw as attorney/agent of record must be signed by every attorney/agent seeking to withdraw or contain a clear indication that one attorney is signing on behalf of another/others. A request to withdraw will not be approved unless at least 30 (thirty) days would remain between the date of approval and the later of the expiration date of a time to file a response or the expiration date of the maximum time period which can be extended under 37 C.F.R. § 1.136(a).

The request was signed by Kyle Turley on behalf of all attorneys of record who are associated with this application.

All attorneys/agents associated with this application have been withdrawn.

Applicant is reminded that there is no attorney of record at this time.

The correspondence address of record has been changed and the new correspondence address is the address indicated below.

There are no pending Office actions at the present time.

Telephone inquiries concerning this decision should be directed to undersigned at 571-272-1642.

April M. Wise
Petitions Examiner
Office of Petitions

cc: MR. KAMAL JAFFREY
DELTA SEARCH LABS, INC.
400 TECHNOLOGY SQUARE
CAMBRIDGE, MA 02139

UNITED STATES PATENT AND TRADEMARK OFFICE

UNITED STATES DEPARTMENT OF COMMERCE
United States Patent and Trademark Office
Address: COMMISSIONER FOR PATENTS
P.O. Box 1450
Alexandria, Virginia 22313-1450
www.uspto.gov

APPLICATION NUMBER	FILING OR 371(C) DATE	FIRST NAMED APPLICANT	ATTY. DOCKET NO./TITLE
09/770,810	01/26/2001	Syed Kamal H. Jaffrey	20336-006

CONFIRMATION NO. 8252

POWER OF ATTORNEY NOTICE

30623
MINTZ, LEVIN, COHN, FERRIS, GLOVSKY
AND POPEO, P.C.
ONE FINANCIAL CENTER
BOSTON, MA 02111

OC000000026603669

Date Mailed: 11/05/2007

NOTICE REGARDING CHANGE OF POWER OF ATTORNEY

This is in response to the Power of Attorney filed 06/18/2007.

- The withdrawal as attorney in this application has been accepted. Future correspondence will be mailed to the new address of record. 37 CFR 1.33.

/amwise/

Office of Initial Patent Examination (571) 272-4000 or 1-800-PTO-9199

UNITED STATES PATENT AND TRADEMARK OFFICE

Commissioner for Patents
United States Patent and Trademark Office
P.O. Box 1450
Alexandria, VA 22313-1450
www.uspto.gov

DENNIS J. DUPRAY, Ph.D.
1801 BELVEDERE STREET
GOLDEN, CO 80401

COPY MAILED

MAR 2 2 2007

OFFICE OF PETITIONS

In re Application of	:	
Dupray et al.	:	
Application No. 09/770,838	:	ON PETITION
Filed: January 26, 2001	:	
Attorney Docket No. 1003-1	:	

This is a decision on the petition under 37 C.F.R. § 1.137(b), filed October 18, 2006, to revive the above-identified application.

The petition is **DISMISSED**.

Any request for reconsideration must be submitted within TWO (2) MONTHS from the mail date of this decision. No further petition fee is required for the request. Extensions of time under 37 CFR 1.136(a) are permitted. The reconsideration request should include a cover letter entitled "Renewed Petition under 37 CFR 1.137(b)." This is **not** a final agency action within the meaning of 5 U.S.C. § 704.

The above-identified application became abandoned for failure to submit the issue fee and publication fee in a timely manner in reply to the Notice of Allowance mailed June 15, 2006, which set a statutory period for reply of three (3) months. Accordingly, the above-identified application became abandoned on September 16, 2006.

A grantable petition under 37 CFR 1.137(b) must be accompanied by:
(1) the required reply,[1]
(2) the petition fee,
(3) a statement that the entire delay in filing the required reply from the due date for the reply until the filing of a grantable petition pursuant to 37 CFR 1.137(b) was unintentional, and
(4) a terminal disclaimer and fee if the application was filed on or before June 8, 1995 or if the application is a design application.

Where there is a question as to whether either the abandonment or the delay in filing a petition under 37 CFR 1.137 was unintentional, the Commissioner may require additional information.[2]

---

[1] In a nonprovisional application abandoned for failure to prosecute, the required reply may be met by the filing of a continuing application. In an application or patent, abandoned or lapsed for failure to pay the issue fee or any portion thereof, the required reply must be the payment of the issue fee or any outstanding balance thereof.

[2] See MPEP 711.03(c)(III)(C) and (D).

The instant petition lacks item (1). Petitioner submitted a Request for Continued Examination (RCE) and an Information Disclosure Statement (IDS). 35 U.S.C. 41(a)(7) and 151 each require payment of the issue fee as a condition of reviving an application abandoned or patent lapsed for failure to pay the issue fee. Therefore, the filing of a continuing application without payment of the issue fee or any outstanding balance thereof is not an acceptable reply in an application abandoned or patent lapsed for failure to pay the issue fee or any portion thereof. Once the issue and publication fees have been submitted, the instant application will be returned to the Technology Center for consideration of the RCE concurrently filed.

Petitioner is advised that, once submitted, the issue fee cannot be refunded. If, however, this application is again allowed, petitioner may request that it be applied towards the issue fee required by the new Notice of Allowance.[1]

Further correspondence with respect to this matter should be addressed as follows:

By mail: Mail Stop PETITIONS
Commissioner for Patents
Post Office Box 1450
Alexandria, VA 22313-1450

By hand: Customer Window located at:

U.S. Patent and Trademark Office
Customer Service Window Randolph Building
401 Dulany Street
Alexandria, VA 22314

By fax: (571) 273-8300
ATTN: Office of Petitions

Any questions concerning this matter may be directed to the undersigned at (571) 272-3206.

Liana Walsh
Petitions Examiner
Office of Petitions

[1] *The request to apply the issue fee to the new Notice may be satisfied by completing and returning the new Part B – Fee(s) Transmittal Form (along with any balance due at the time of submission). Petitioner is advised that the Issue Fee Transmittal Form must be completed and timely submitted to avoid abandonment of the application.*

UNITED STATES PATENT AND TRADEMARK OFFICE

Commissioner for Patents
United States Patent and Trademark Office
P.O. Box 1450
Alexandria, VA 22313-1450
www.uspto.gov

DENNIS J. DUPRAY, PH.D.
1801 BELVEDERE STREET
GOLDEN, CO 80401

COPY MAILED

MAR 17 2008

OFFICE OF PETITIONS

In re Application of
DUPRAY, et al.
Application No. 09/770,838
Filed: January 26, 2001
Attorney Docket No. **1003-1**

DECISION GRANTING PETITION
UNDER 37 CFR 1.313(c)(2)

This is a decision on the petition under 37 CFR 1.313(c)(2), filed March 16, 2008, to withdraw the above-identified application from issue after payment of the issue fee.

The petition is **GRANTED**.

The above-identified application is withdrawn from issue for consideration of a submission under 37 CFR 1.114 (request for continued examination). *See* 37 CFR 1.313(c)(2).

Petitioner is advised that the issue fee paid on August 23, 2007 cannot be refunded. If, however, this application is again allowed, petitioner may request that it be applied towards the issue fee required by the new Notice of Allowance.[1]

Telephone inquiries should be directed to the undersigned at (571) 272-7253.

This application is being referred to Technology Center AU 3662 for processing of the request for continued examination under 37 CFR 1.114 and for consideration of the concurrently filed information disclosure statement.

Monica A. Graves
Petitions Examiner
Office of Petitions

---

[1] *The request to apply the issue fee to the new Notice may be satisfied by completing and returning the new Part B – Fee(s) Transmittal Form (along with any balance due at the time of submission). Petitioner is advised that the Issue Fee Transmittal Form must be completed and timely submitted to avoid abandonment of the application.*

UNITED STATES
PATENT AND
TRADEMARK OFFICE

#11

UNDER SECRETARY OF COMMERCE FOR INTELLECTUAL PROPERTY
AND DIRECTOR OF THE UNITED STATES PATENT AND TRADEMARK OFFICE
WASHINGTON, D.C. 20231
WWW.USPTO.GOV

JUN - 2 2003

JEAN C. BAKER
QUARLES AND BRADY LLP
411 EAST WISCONSIN AVENUE
MILWAUKEE, WI 53202-4497

In re Application of Dara W. Frank et al.	:
Serial No.: 09/770,916	:
Filed: January 26, 2001	: WITHDRAWAL OF ABANDONMENT
Attorney Docket No.: 650053.91487	:

This is in response to applicants' petition under 37 CFR 1.181, filed January 21, 2003, requesting withdrawal of the holding of abandonment based on the timely filing of a response to the Office action mailed June 10, 2002.

A review of the file history shows that the examiner mailed an Office action (restriction requirement) to applicant on June 10, 2002, setting a one month shortened statutory time period for reply. On January 9, 2003, the Office mailed a Notice of Abandonment for failure to respond to the Office action.

Applicant states that a response was filed on July 8, 2002, as evidenced by the properly executed Certificate of Mailing on the reply. Applicant provides a copy of the submitted reply with the petition, and also a declaration by Ms. Anita Eisert stating that the response was filed on that date. In view of this evidence, applicant is considered to have submitted a timely reply.

Applicant's petition is **GRANTED**. The application is restored to pending status with the mailing of this decision and will be forwarded to the examiner for examination on the merits.

Should there be any questions with regard to this letter please contact Bruce Campell by letter addressed to the Director, Technology Center 1600, Washington, DC 20231, or by telephone at (703) 308-4205 or by facsimile transmission at (703) 746-5006.

Jasemine C. Chambers

Jasemine C. Chambers
Director, Technology Center 1600

SEP 1 4 2001

UNITED STATES PATENT AND TRADEMARK OFFICE

#3

Commissioner for Patents
United States Patent and Trademark Office
Washington, D.C. 20231
www.uspto.gov

M. Robert Kestenbaum
11011 Bermuda Dunes NE
Albuquerque, NM 87111

In re Application of HEID	:	
U.S. Application No.: 09/770,958	:	DECISION ON PETITION
Int. Application No.: PCT/EP99/03175	:	
Int. Filing Date: 10 May 1999	:	UNDER 37 CFR 1.137(b)
Priority Date: 29 May 1998	:	
Attorney Docket No.: (Z)98017 P US	:	
For: KNIFE-HOLDER FOR A MICROTOME	:	

This is in response to applicant's "Petition for Revival of an International Application for Patent Designating the U.S. Abandoned Unintentionally Under 37 CFR 1.137(b)" filed 25 January 2001.

BACKGROUND

On 10 May 1999, applicant filed international application PCT/EP99/03175, which claimed priority of an earlier Germany application filed 29 May 1998. A copy of the international application was communicated to the USPTO from the International Bureau on 09 December 1999.

International application PCT/EP99/03175 became abandoned as to the United States for failure to timely pay the basic national fee.

On 25 January 2001, applicant filed the present petition. The petition states that it is accompanied by a continuation application filed under 37 CFR 1.53(b), the petition fee set forth in 37 CFR 1.17(m), and a statement that "the entire delay in filing the required reply from the due date for the required reply until the filing of a grantable petition under 37 CFR 1.137(b) was unintentional."

DISCUSSION

Under 37 CFR 1.137(b), a petition requesting that an application be revived on the grounds of unintentional abandonment must be accompanied by: (1) the required reply unless previously filed, (2) the petition fee as set forth in 37 CFR 1.17(m), (3) a statement that the entire

delay in filing the required reply from the due date for the reply until the filing of a grantable petition was unintentional, and (4) a terminal disclaimer if the application was filed before 08 June 1995.

With regard to item (1), the filing of the present continuation application under 35 U.S.C. 111 and 37 CFR 1.53(b) is accepted as the appropriate response under 37 CFR 1.137(b).

With regard to item (2), applicant has provided the required petition fee.

With regard to item (3), applicant has provided the required statement.

With regard to item (4), because the international application was filed after 08 June 1995, no terminal disclaimer is required.

CONCLUSION

For the reasons above, the petition under 37 CFR 1.137(b) is GRANTED.

International application PCT/EP99/03175 is being revived for purposes of continuity only and since continuity has been established by this decision reviving the international application, the international application is again abandoned in favor of the present U.S. continuation application number 09/770,958.

This application is being forwarded to the United States Designated/Elected Office (DO/EO/US) for processing in accordance with this decision and will thereafter be forwarded to the Office of Initial Patent Examination for further processing and review as an application filed under 35 U.S.C. 111.

Bryan Tung
PCT Legal Examiner
PCT Legal Office

Telephone: 703-308-6614
Facsimile: 703-308-6459

KLP/DJV

UNITED STATES PATENT AND TRADEMARK OFFICE

OIPE
APR 0 6 2005
PATENT & TRADEMARK OFFICE

COMMISSIONER FOR PATENTS
UNITED STATES PATENT AND TRADEMARK OFFICE
P.O. BOX 1450
ALEXANDRIA, VA 22313-1450
www.uspto.gov

Paper No. 12

Kevin L. Pontius
ROBERTS ABOKHAIR & MARDULA, LLC
SUITE 1000
11800 SUNRISE VALLEY DRIVE
RESTON, VA 20191

JUN 3 2004

In re Application of:
John Noto et al.
Serial No.: 09/770,970
Filed: February 2, 2001
For: **OPTICAL MULTIPLEXER AND CROSS-SWITCH USING ETCHED LIQUID CRYSTAL FABRY-PEROT ETALONS**

DECISION ON PETITION

Scientific Solns. 2557-001
DOCKETED
6-4-04 ACO

This is a response to the request for reconsideration under M.P.E.P. §711.03 filed December 11, 2003. The request is being treated as a petition to withdraw the holding of abandonment of the above-identified application.

The petition is GRANTED.

This application was held abandoned for failure to respond in a timely manner to the election of species requirement of February 6, 2003. A Notice of Abandonment was mailed on November 28, 2003.

Petitioner states that a response was in fact timely filed. To support this assertion, petitioner has submitted a copy of a return postcard on which the US Patent and Trademark Office (USPTO) acknowledges receipt on April 1, 2003 of an amendment, a petition for extension of time and a check for $55.00 for the extension fee. A copy of the response was submitted along with the postcard receipt.

The response is not of record in the application file at the time the Notice of Abandonment was mailed but has now been associated with the file. A review of the response indicates that applicant made an election to have species A examined and pointed out that claims 4 through 12 were directed to the elected species.

In view of the above stated reasons, the Notice of Abandonment is hereby vacated and the holding of abandonment withdrawn.

The application file is being forwarded to the examiner for further examination.

Any inquiry regarding this decision should be directed to Hien H. Phan, Special Program Examiner, at (571) 272-1606.

Janice A. Falcone, Group Director
Technology Center 2800
Semiconductors, Electrical and Optical
Systems and Components

UNITED STATES PATENT AND TRADEMARK OFFICE

COMMISSIONER FOR PATENTS
UNITED STATES PATENT AND TRADEMARK OFFICE
P.O. BOX 1450
ALEXANDRIA, VA 22313-1450
www.uspto.gov

Helen C. Lockhart
Wolf, Greenfield & Sacks, P.C.
600 Atlantic Avenue
Boston MA 02210

COPY MAILED

JUN 22 2007

OFFICE OF PETITIONS

In re Application of	:	
Pier, et al.	:	
Application No. 09/771,003	:	DECISION ON PETITION
Filed: January 26, 2001	:	
Attorney Docket No. B0801/7218(HCL)	:	

This is a decision on the petition under 37 CFR 1.182, filed, March 27, 2007, to change the name of inventor Ying Wang" to – Julia Ying Wang --.

The petition is **GRANTED**.

Office records have been updated to reflect the inventor's change of name. A corrected Filing Receipt, which reflects the inventor's change of name, accompanies this decision on petition.

Any questions concerning this matter may be directed to the undersigned at (571) 272-3205.

Any questions concerning the examination procedures or status of the application should be directed to the Technology Center.

This application is being referred to the Office of Patent Publications for further processing.

Alesia M. Brown
Petitions Attorney
Office of Petitions

ATTACHMENT: Corrected Filing Receipt

UNITED STATES PATENT AND TRADEMARK OFFICE

UNITED STATES DEPARTMENT OF COMMERCE
United States Patent and Trademark Office
Address: COMMISSIONER FOR PATENTS
P.O. Box 1450
Alexandria, Virginia 22313-1450
www.uspto.gov

APPL NO.	FILING OR 371(c) DATE	ART UNIT	FIL FEE REC'D	ATTY.DOCKET NO	TOT CLMS	IND CLMS
09/771,003	01/26/2001	1645	875	B0801/7218(HCL)	10	1

CONFIRMATION NO. 6350

CORRECTED FILING RECEIPT

OC000000024493082

Helen C. Lockhart
Wolf, Greenfield & Sacks, P.C.
600 Atlantic Avenue
Boston, MA 02210

Date Mailed: 06/22/2007

Receipt is acknowledged of this regular Patent Application. It will be considered in its order and you will be notified as to the results of the examination. Be sure to provide the U.S. APPLICATION NUMBER, FILING DATE, NAME OF APPLICANT, and TITLE OF INVENTION when inquiring about this application. Fees transmitted by check or draft are subject to collection. Please verify the accuracy of the data presented on this receipt. **If an error is noted on this Filing Receipt, please mail to the Commissioner for Patents P.O. Box 1450 Alexandria Va 22313-1450. Please provide a copy of this Filing Receipt with the changes noted thereon. If you received a "Notice to File Missing Parts" for this application, please submit any corrections to this Filing Receipt with your reply to the Notice. When the USPTO processes the reply to the Notice, the USPTO will generate another Filing Receipt incorporating the requested corrections (if appropriate).**

Applicant(s)

Gerald Pier, Brookline, MA;
Julia Ying Wang, CHESTNUT HILL, MA;
David McKenney, Quincy, MA;

Power of Attorney: The patent practitioners associated with Customer Number **23628**.

Domestic Priority data as claimed by applicant

This application is a CIP of 09/399,904 09/21/1999 ABN
which is a CIP of 09/354,408 07/15/1999 ABN
which claims benefit of 60/093,117 07/15/1998

Foreign Applications

If Required, Foreign Filing License Granted: 03/15/2002

The country code and number of your priority application, to be used for filing abroad under the Paris Convention, is US09/771,003

Projected Publication Date: Not Applicable

Non-Publication Request: No

Early Publication Request: No

** SMALL ENTITY **

Title

POLYSACCHARIDE VACCINE FOR STAPHYLOCOCCAL INFECTIONS

Preliminary Class

424

PROTECTING YOUR INVENTION OUTSIDE THE UNITED STATES

Since the rights granted by a U.S. patent extend only throughout the territory of the United States and have no effect in a foreign country, an inventor who wishes patent protection in another country must apply for a patent in a specific country or in regional patent offices. Applicants may wish to consider the filing of an international application under the Patent Cooperation Treaty (PCT). An international (PCT) application generally has the same effect as a regular national patent application in each PCT-member country. The PCT process **simplifies** the filing of patent applications on the same invention in member countries, but **does not result** in a grant of "an international patent" and does not eliminate the need of applicants to file additional documents and fees in countries where patent protection is desired.

Almost every country has its own patent law, and a person desiring a patent in a particular country must make an application for patent in that country in accordance with its particular laws. Since the laws of many countries differ in various respects from the patent law of the United States, applicants are advised to seek guidance from specific foreign countries to ensure that patent rights are not lost prematurely.

Applicants also are advised that in the case of inventions made in the United States, the Director of the USPTO must issue a license before applicants can apply for a patent in a foreign country. The filing of a U.S. patent application serves as a request for a foreign filing license. The application's filing receipt contains further information and guidance as to the status of applicant's license for foreign filing.

Applicants may wish to consult the USPTO booklet, "General Information Concerning Patents" (specifically, the section entitled "Treaties and Foreign Patents") for more information on timeframes and deadlines for filing foreign patent applications. The guide is available either by contacting the USPTO Contact Center at 800-786-9199, or it can be viewed on the USPTO website at http://www.uspto.gov/web/offices/pac/doc/general/index.html.

For information on preventing theft of your intellectual property (patents, trademarks and copyrights), you may wish to consult the U.S. Government website, http://www.stopfakes.gov. Part of a Department of Commerce initiative, this website includes self-help "toolkits" giving innovators guidance on how to protect intellectual property in specific countries such as China, Korea and Mexico. For questions regarding patent enforcement issues, applicants may call the U.S. Government hotline at 1-866-999-HALT (1-866-999-4158).

LICENSE FOR FOREIGN FILING UNDER
Title 35, United States Code, Section 184
Title 37, Code of Federal Regulations, 5.11 & 5.15

GRANTED

The applicant has been granted a license under 35 U.S.C. 184, if the phrase "IF REQUIRED, FOREIGN FILING LICENSE GRANTED" followed by a date appears on this form. Such licenses are issued in all applications where the conditions for issuance of a license have been met, regardless of whether or not a license may be required as set forth in 37 CFR 5.15. The scope and limitations of this license are set forth in 37 CFR 5.15(a) unless an earlier license has been issued under 37 CFR 5.15(b). The license is subject to revocation upon written notification. The date indicated is the effective date of the license, unless an earlier license of similar scope has been granted under 37 CFR 5.13 or 5.14.

This license is to be retained by the licensee and may be used at any time on or after the effective date thereof unless it is revoked. This license is automatically transferred to any related applications(s) filed under 37 CFR 1.53(d). This license is not retroactive.

The grant of a license does not in any way lessen the responsibility of a licensee for the security of the subject matter as imposed by any Government contract or the provisions of existing laws relating to espionage and the national security or the export of technical data. Licensees should apprise themselves of current regulations especially with respect to certain countries, of other agencies, particularly the Office of Defense Trade Controls, Department of State (with respect to Arms, Munitions and Implements of War (22 CFR 121-128)); the Bureau of Industry and Security, Department of Commerce (15 CFR parts 730-774); the Office of Foreign Assets Control, Department of Treasury (31 CFR Parts 500+) and the Department of Energy.

NOT GRANTED

No license under 35 U.S.C. 184 has been granted at this time, if the phrase "IF REQUIRED, FOREIGN FILING LICENSE GRANTED" DOES NOT appear on this form. Applicant may still petition for a license under 37 CFR 5.12, if a license is desired before the expiration of 6 months from the filing date of the application. If 6 months has lapsed from the filing date of this application and the licensee has not received any indication of a secrecy order under 35 U.S.C. 181, the licensee may foreign file the application pursuant to 37 CFR 5.15(b).

UNITED STATES PATENT AND TRADEMARK OFFICE

COMMISSIONER FOR PATENTS
UNITED STATES PATENT AND TRADEMARK OFFICE
P.O. BOX 1450
ALEXANDRIA, VA 22313-1450
www.uspto.gov

Helen C. Lockhart
Wolf, Greenfield & Sacks, P.C.
600 Atlantic Avenue
Boston MA 02210

COPY MAILED

AUG 27 2007

OFFICE OF PETITIONS

In re Application of
Pier, et al.
Application No. 09/771,003
Filed: January 26, 2001
Attorney Docket No. **B0801/7218(HCL)**

DECISION ON PETITION

This is a decision on the petition under 37 CFR 1.182, filed, March 27, 2007, to change the name of inventor Ying Yang" to – Julia Ying Yang --.

The petition is **GRANTED**.

Office records have been updated to reflect the inventor's change of name. A corrected Filing Receipt, which reflects the inventor's change of name, accompanies this decision on petition.

Any questions concerning this matter may be directed to the undersigned at (571) 272-3205.

Any questions concerning the examination procedures or status of the application should be directed to the Technology Center.

This application is being referred to the Office of Patent Publications for further processing.

Alesia M. Brown
Petitions Attorney
Office of Petitions

ATTACHMENT: Corrected Filing Receipt

UNITED STATES PATENT AND TRADEMARK OFFICE

UNITED STATES DEPARTMENT OF COMMERCE
United States Patent and Trademark Office
Address: COMMISSIONER FOR PATENTS
P.O. Box 1450
Alexandria, Virginia 22313-1450
www.uspto.gov

APPL NO.	FILING OR 371(c) DATE	ART UNIT	FIL FEE REC'D	ATTY.DOCKET NO	TOT CLMS	IND CLMS
09/771,003	01/26/2001	1645	875	B0801/7218(HCL)	10	1

CONFIRMATION NO. 6350

CORRECTED FILING RECEIPT

OC000000023482503

Helen C. Lockhart
Wolf, Greenfield & Sacks, P.C.
600 Atlantic Avenue
Boston, MA 02210

Date Mailed: 04/20/2007

Receipt is acknowledged of this regular Patent Application. It will be considered in its order and you will be notified as to the results of the examination. Be sure to provide the U.S. APPLICATION NUMBER, FILING DATE, NAME OF APPLICANT, and TITLE OF INVENTION when inquiring about this application. Fees transmitted by check or draft are subject to collection. Please verify the accuracy of the data presented on this receipt. **If an error is noted on this Filing Receipt, please mail to the Commissioner for Patents P.O. Box 1450 Alexandria Va 22313-1450. Please provide a copy of this Filing Receipt with the changes noted thereon. If you received a "Notice to File Missing Parts" for this application, please submit any corrections to this Filing Receipt with your reply to the Notice. When the USPTO processes the reply to the Notice, the USPTO will generate another Filing Receipt incorporating the requested corrections (if appropriate).**

Applicant(s)

Gerald Pier, Brookline, MA;
Julia Ying Wang, Brookline, MA;
David McKenney, Quincy, MA;

Power of Attorney:

David Wolf--17528
George Greenfield--17756
Stanley Sacks--19900
Ronald Kransdorf--20004
William Gosz--27787
Steven Henry--27900
Edward Perlman--28105
Lawrence Green--29384
William McClellan--29409
Therese Hendricks--30389

Domestic Priority data as claimed by applicant

This application is a CIP of 09/399,904 09/21/1999 ABN
which is a CIP of 09/354,408 07/15/1999 ABN
which claims benefit of 60/093,117 07/15/1998

Foreign Applications

If Required, Foreign Filing License Granted: 03/15/2002

The country code and number of your priority application, to be used for filing abroad under the Paris Convention, is US09/771,003

Projected Publication Date: Not Applicable

Non-Publication Request: No

Early Publication Request: No

**** SMALL ENTITY ****

Title

POLYSACCHARIDE VACCINE FOR STAPHYLOCOCCAL INFECTIONS

Preliminary Class

424

PROTECTING YOUR INVENTION OUTSIDE THE UNITED STATES

Since the rights granted by a U.S. patent extend only throughout the territory of the United States and have no effect in a foreign country, an inventor who wishes patent protection in another country must apply for a patent in a specific country or in regional patent offices. Applicants may wish to consider the filing of an international application under the Patent Cooperation Treaty (PCT). An international (PCT) application generally has the same effect as a regular national patent application in each PCT-member country. The PCT process **simplifies** the filing of patent applications on the same invention in member countries, but **does not result** in a grant of "an international patent" and does not eliminate the need of applicants to file additional documents and fees in countries where patent protection is desired.

Almost every country has its own patent law, and a person desiring a patent in a particular country must make an application for patent in that country in accordance with its particular laws. Since the laws of many countries differ in various respects from the patent law of the United States, applicants are advised to seek guidance from specific foreign countries to ensure that patent rights are not lost prematurely.

Applicants also are advised that in the case of inventions made in the United States, the Director of the USPTO must issue a license before applicants can apply for a patent in a foreign country. The filing of a U.S. patent application serves as a request for a foreign filing license. The application's filing receipt contains further information and guidance as to the status of applicant's license for foreign filing.

Applicants may wish to consult the USPTO booklet, "General Information Concerning Patents" (specifically, the section entitled "Treaties and Foreign Patents") for more information on timeframes and deadlines for filing foreign patent applications. The guide is available either by contacting the USPTO Contact Center at 800-786-9199, or it can be viewed on the USPTO website at http://www.uspto.gov/web/offices/pac/doc/general/index.html.

For information on preventing theft of your intellectual property (patents, trademarks and copyrights), you may wish to consult the U.S. Government website, http://www.stopfakes.gov. Part of a Department of Commerce initiative, this website includes self-help "toolkits" giving innovators guidance on how to protect intellectual property in specific countries such as China, Korea and Mexico. For questions regarding patent enforcement issues, applicants may call the U.S. Government hotline at 1-866-999-HALT (1-866-999-4158).

LICENSE FOR FOREIGN FILING UNDER
Title 35, United States Code, Section 184
Title 37, Code of Federal Regulations, 5.11 & 5.15

GRANTED

The applicant has been granted a license under 35 U.S.C. 184, if the phrase "IF REQUIRED, FOREIGN FILING

LICENSE GRANTED" followed by a date appears on this form. Such licenses are issued in all applications where the conditions for issuance of a license have been met, regardless of whether or not a license may be required as set forth in 37 CFR 5.15. The scope and limitations of this license are set forth in 37 CFR 5.15(a) unless an earlier license has been issued under 37 CFR 5.15(b). The license is subject to revocation upon written notification. The date indicated is the effective date of the license, unless an earlier license of similar scope has been granted under 37 CFR 5.13 or 5.14.

This license is to be retained by the licensee and may be used at any time on or after the effective date thereof unless it is revoked. This license is automatically transferred to any related applications(s) filed under 37 CFR 1.53(d). This license is not retroactive.

The grant of a license does not in any way lessen the responsibility of a licensee for the security of the subject matter as imposed by any Government contract or the provisions of existing laws relating to espionage and the national security or the export of technical data. Licensees should apprise themselves of current regulations especially with respect to certain countries, of other agencies, particularly the Office of Defense Trade Controls, Department of State (with respect to Arms, Munitions and Implements of War (22 CFR 121-128)); the Bureau of Industry and Security, Department of Commerce (15 CFR parts 730-774); the Office of Foreign Assets Control, Department of Treasury (31 CFR Parts 500+) and the Department of Energy.

NOT GRANTED

No license under 35 U.S.C. 184 has been granted at this time, if the phrase "IF REQUIRED, FOREIGN FILING LICENSE GRANTED" DOES NOT appear on this form. Applicant may still petition for a license under 37 CFR 5.12, if a license is desired before the expiration of 6 months from the filing date of the application. If 6 months has lapsed from the filing date of this application and the licensee has not received any indication of a secrecy order under 35 U.S.C. 181, the licensee may foreign file the application pursuant to 37 CFR 5.15(b).

UNITED STATES PATENT AND TRADEMARK OFFICE

COMMISSIONER FOR PATENTS
UNITED STATES PATENT AND TRADEMARK OFFICE
WASHINGTON, D.C. 20231
www.uspto.gov

COPY MAILED

JUL 18 2001

OFFICE OF PETITIONS
A/C PATENTS

Russell C. Scott
AKIN GUMP STRAUSS HAUER & FELD
1900 FROST BANK PLAZA
816 CONGRESS AVENUE
AUSTIN, TX 78701

In re Application of
NIR TAL, ET AL.
Application No. 09/771010
Filing date: January 26, 2001
For: COMMUNICATION SYSTEM WHICH DYNAMICALLY SWITCHES SIZES OF SAMPLE BUFFER BETWEEN FIRST SIZES FOR QUICK RESPONSE TIME AND SECOND SIZE FOR ROBUSTNESS TO INTERRUPT LATENCY

: DECISION REFUSING STATUS
: UNDER 37 CFR §1.47(a)

This is in response to the renewed "Petition Under 37 CFR §1.47(a)," filed on April 17, 2001.

The petition is dismissed.

A grantable petition under 37 CFR §1.47 (a) requires:

(1) proof that the signing inventor cannot be reached or refused to sign the oath or declaration after having been presented with the application papers (specification, claims and drawings);

(2) an acceptable oath or declaration in compliance with 35 U.S.C. §115 and 116;

(3) the petition fee; and

(4) a statement of the last known address of the non-signing inventor.

The Petitioner lacks item (1) and (2) set forth above.

In order to establish a bona fide diligent effort pursuant to 37 CFR §1.47 (a), Petitioner must demonstrate the diligent effort to reach the inventor. Petitioner has shown that correspondence was mailed to Mr. Ron Cohen but returned as undeliverable. In addition, an e-mail to Sharley Torri from Eti De-Leon states that "I can approach him because he is sitting in offices across our offices." Given that Mr. Cohen can be reached via Eti De-Leon, applicant has failed to demonstrate that Mr. Cohen cannot be reached.

As to item (2), both available inventors must make the declaration on behalf of joint inventor Cohen. A declaration signed by joint inventor Tal on behalf of Cohen is also required.

Further correspondence with respect to this matter should be addressed as follows:

By mail: Assistant Commissioner for Patents
Box DAC
Washington, D.C. 20231

By fax: (703) 308-6916
Attn: Office of Petitions

By hand: Office of Petitions
2201 South Clark Place
Crystal Plaza Four, Suite 3C23
Arlington, VA 22202

Telephone inquiries regarding this decision should be directed to the undersigned at (703)306-3159.

Karin Tyson
Senior Legal Advisor
Office of Patent Legal Administration
Office of the Deputy Commissioner
For Patent Policy and Projects

UNITED STATES PATENT AND TRADEMARK OFFICE

COMMISSIONER FOR PATENTS
UNITED STATES PATENT AND TRADEMARK OFFICE
WASHINGTON, D.C. 20231
www.uspto.gov

Paper No. 9

AKIN GUMP STRAUSS HAUER & FELD
1900 FROST BANK PLAZA
816 CONGRESS AVENUE
AUSTIN TX 78701

COPY MAILED

FEB 14 2002

OFFICE OF PETITIONS

In re Application of Nir Tal, et al. Application No. 09/771,010 Filed: January 26, 2001 Docket No. 97RSS561RE	DECISION NOTING JOINDER OF INVENTOR AND PETITION UNDER 37 CFR 1.47(a) MOOT

This is in response to the "Response to Decision Regarding Petition Under 37 CFR 1.47(a)", filed January 17, 2002.

The above-identified application was filed as a reissue application on January 26, 2001, without an executed oath or declaration. Accordingly, on February 13, 2001, a "Notice to File Missing Parts of Reissue Application" was mailed, requiring an executed oath or declaration and a surcharge for its late filing. This Notice set a two (2) month period for reply. In response, on April 17, 2001, petitioner obtained a one (1) month extension of time and filed a petition under 37 CFR 1.47(a). However, this petition was dismissed in a decision mailed on July 18, 2001.

Petitioner has submitted a declaration executed by all of the joint inventors. The declaration has been found to be in compliance with 37 CFR 1.63.

In view of the **joinder** of the inventors, further consideration under 37 CFR 1.47(a) is not necessary and the petition is considered to be **moot**. This application does not have any Rule 1.47(a) status and no such status should appear on the file wrapper. This application need not be returned to this Office for further consideration under 37 CFR 1.47(a).

The file does not indicate a change of address has been submitted, although the address given on the petition differs from the address of record. If appropriate, a change of address should be filed in accordance with MPEP 601.03. A courtesy copy of this decision is being mailed to the address given on the petition; however, the Office will mail all future correspondence solely to the address of record.

The application is being forwarded to the Office of Initial Patent Examination for further processing.

Telephone inquiries should be directed to Petitions Attorney Cliff Congo at (703) 305-0272.

Beverly M. Flanagan
Supervisory Petitions Examiner
Office of Petitions
Office of the Deputy Commissioner
for Patent Examination Policy

cc: Christopher J. Rourk
Akin, Gump, Strauss, Hauer & Feld, L.L.P.
1700 Pacific Avenue
Suite 4100
Dallas, Texas 75201

UNITED STATES PATENT AND TRADEMARK OFFICE

Commissioner for Patents
United States Patent and Trademark Office
P.O. Box 1450
Alexandria, VA 22313-1450
www.uspto.gov

SILICON LABORATORIES INC.
ATTN: LEGAL AFFAIRS
400 W. CESAR CHAVEZ
AUSTIN, TX 78701

COPY MAILED

APR 0 3 2008

OFFICE OF PETITIONS

In re Application of Nir Tal et al.	:	
Reissue Application No. 09/771,010	:	
Reissue Filing Date: January 26, 2001	:	Decision on Petition
Reissue of Patent No. 5,864,714	:	
Original Issue Date: January 26, 1999	:	
Attorney Docket No. SILA:310	:	

This is a decision on the petition under 37 CFR 1.47(a) filed October 25, 2007, and supplemented November 2, 2007, which is being treated as a petition under 37 CFR 1.183 seeking waiver of 37 CFR 1.67 and 1.63 where they require that a supplemental declaration be executed by the named inventors.[1]

The petition is **granted.**

In view of the efforts recounted in the petition to obtain the signature of Ron Cohen, it is agreed that justice would be served by waiving the requirement for his signature on the supplemental declaration filed October 25, 2007, and supplemented November 2, 2007.

The supplemental declaration is accepted, on petition, with the signature of two of the inventors, but without the signature of Cohen.

Technology Center Art Unit 2116 will be informed of the instant decision and the application will be further examined in due course.

Telephone inquiries regarding this communication should be directed to Petitions Attorney Steven Brantley at (571) 272-3203.

Charles Steven Brantley
Senior Petitions Attorney
Office of Petitions

[1] Once an application has received a fully executed oath or declaration and been placed on the files for examination, the provisions of 37 CFR 1.47 no longer apply. Rather, the remedy for treating an inventor's refusal to also sign a supplemental oath or declaration is waiver of 37 CFR 1.67. See MPEP 603.

UNITED STATES PATENT AND TRADEMARK OFFICE

COMMISSIONER FOR PATENTS
UNITED STATES PATENT AND TRADEMARK OFFICE
P.O. BOX 1450
ALEXANDRIA, VA 22313-1450
www.uspto.gov

Thomas D. MacBlain
GALLAGHER & KENNEDY
2575 East Camelback Road
Phoenix, AZ 85016

MAILED

JUL 0 5 2005

Technology Center 2100

In re Application of
Frank C. HOPPENSTEADT et al.
Appl. No.: 09/771,019
Filed: January 26, 2001
For: PHASE-LOCKED LOOP OSCILLATORY NEUROCOMPUTER

DECISION ON PETITION
UNDER 37 CFR § 1.59

This is a decision on the petition under 37 CFR § 1.59(b), filed April 13, 2005 to expunge the Supplemental Reasons for Allowance mailed February 24, 2005. A Notice of Withdrawal from Issue under 37 CFR § 1.313(b) was mailed on April 29, 2005.

The petition is **DISMISSED**. The petition fee set forth in 37 CFR § 1.17(h) has not been paid.

It is noticed by the undersigned that the above-identified application was being forwarded to examiner Joseph Hirl for appropriate action, including notifying applicant of the new status of this application.

Any inquiry concerning the decision from the undersigned should be directed to Vincent N. Trans whose telephone number is 571-272-3613.

Vincent N. Trans
Special Program Examiner
Technology Center 2100
Computer Architecture, Software, and
Information Security

UNITED STATES PATENT AND TRADEMARK OFFICE

COMMISSIONER FOR PATENTS
UNITED STATES PATENT AND TRADEMARK OFFICE
P.O. BOX 1450
ALEXANDRIA, VA 22313-1450
WWW.USPTO.GOV

Paper No. None

WOODARD EMHARDT MORIARTY MCNETT & HENRY LLP
ATTN: JOHN M. BRADSHAW
111 MONUMENT CIRCLE, SUITE 3700
INDIANAPOLIS IN 46204

COPY MAILED

APR 20 2005

OFFICE OF PETITIONS

In re Application of Richard A. Craig et al. Application No. 09/771,064 Filed: January 26, 2001 Attorney Docket Number: E-1825 CIP Title: METHOD AND APPARATUS FOR THE DETECTION OF HYDROGENOUS MATERIALS	:	DECISION DISMISSING PETITION UNDER 37 C.F.R. §1.137(a) AS MOOT

This is a decision on the petition filed November 22, 2004, pursuant to 37 C.F.R. §1.137(a)[1], to revive the above-identified application.

The above-identified application became abandoned for failure to reply within the meaning of 37 CFR §1.113 in a timely manner to the final Office action mailed July 18, 2003, which set a shortened statutory period for reply of three (3) months. On October 24, 2003, a Request for Continued Examination (RCE) was received, and an office action was mailed on December 1, 2003, indicating that the RCE was not fully responsive. This communication set a one-month period for response. No extensions of time under the provisions of 37 CFR §1.136(a) were

1 A grantable petition pursuant to 37 CFR §1.137(a) must be accompanied by:

(1) the required reply (in a nonprovisional application abandoned for failure to prosecute, the required reply may be met by the filing of a continuing application; in an application or patent, abandoned or lapsed for failure to pay the issue fee or any portion thereof, the required reply must be the payment of the issue fee or any outstanding balance thereof);
(2) the petition fee;
(3) a showing to the satisfaction of the Commissioner that the entire delay in filing the required reply from the due date for the reply until the filing of a grantable petition pursuant to this paragraph was unavoidable, and;
(4) a terminal disclaimer (and fee as set forth in §1.20(d)) required pursuant to paragraph (d) of this section.

obtained. Accordingly, the above-identified application became abandoned on January 2, 2004. A notice of abandonment was mailed October 8, 2004.

On November 22, 2004, Petitioner submitted a petition under 37 C.F.R. §1.137(a) which asserted that the communication of December 1, 2003 was not received.

On January 3, 2005, Petitioner submitted a letter which set forth that the communication of December 1, 2003 had been located, and requested that the petition under 37 C.F.R. §1.137(a) be withdrawn. Petitioner has further indicated that he wishes for the present application to remain abandoned.

As such, the instant petition is hereby **DISMISSED AS MOOT**.

The petition fee will be refunded to Petitioner's Deposit Account, as authorized in the petition.

After the mailing of this decision, the application will be forwarded to Files Repository.

The general phone number for the Office of Petitions which should be used for status requests is (571) 272-3282. Telephone inquiries regarding *this decision* should be directed to the undersigned at (571) 272-3225.

Paul Shanoski
Senior Attorney
Office of Petitions
United States Patent and Trademark Office

UNITED STATES PATENT AND TRADEMARK OFFICE

Commissioner for Patents
United States Patent and Trademark Office
P.O. Box 1450
Alexandria, VA 22313-1450
www.uspto.gov

FERENCE & ASSOCIATES
409 BROAD STREET
PITTSBURGH, PA 15143

COPY MAILED

SEP 01 2005

OFFICE OF PETITIONS

In re Application of	:	
Daniel Bauer	:	
Application No. 09/771,091	:	ON PETITION
Filed: January 27, 2001	:	
Attorney Docket No. CH919990050US1	:	

This is a decision on the petition under 37 CFR 1.137(b), filed November 26, 2004, to revive the above-identified application.

In response to the Notice of Allowability mailed May 4, 2004, petitioner hereby submits $1,370 for the petition to revive fee, one (1) sheet of corrected drawings containing Figures 1-2, and the statement of unintentional delay.

37 CFR 1.137(b)(3) requires a statement that the entire delay in filing the required reply from the due date for the reply until the filing of a grantable petition pursuant to 37 CFR 1.137(b) was unintentional. Since the statement contained in the instant petition varies from the language required by 37 CFR 1.137(b)(3), the statement is being construed as the statement required by 37 CFR 1.137(b)(3) and petitioner must notify the Office if this is **not** a correct interpretation of the statement.

The undersigned acknowledges that the examiner withdrew the objections to drawing Figures 6, and 7a-7g. Therefore, since petitioner has met the requirements to revive this application, pursuant to 37 CFR 1.137(b), the petition is **GRANTED**.

This application is being referred to the Office of Publications for further processing into a patent.

Telephone inquiries concerning this decision should be directed to the undersigned at (571) 272-3226.

Andrea Smith
Petitions Examiner
Office of Petitions
Office of the Deputy Commissioner
for Patent Examination Policy

UNITED STATES PATENT AND TRADEMARK OFFICE

UNDER SECRETARY OF COMMERCE FOR INTELLECTUAL PROPERTY AND
DIRECTOR OF THE UNITED STATES PATENT AND TRADEMARK OFFICE
WASHINGTON, DC 20231
www.uspto.gov

Morriss O'Bryant Compagni, P.C.
136 South Main Street
Suite 700
Salt Lake City, UT 84101

MAILED

JUN 16 2003

DIRECTOR'S OFFICE
TECHNOLOGY CENTER 3600

In re application of
Brant Monson
Application No.09/771,119
Filed: January 26, 2001
For: QUICK RELEASE SYSTEM FOR MOTORCYCLE BACKRESTS

DECISION ON REQUEST FOR WITHDRAWAL OF ATTORNEY

This is a decision on the request filed on May 12, 2003, under 37 CFR 1.36 and MPEP 402.06, requesting permission to withdraw as the attorney of record in the above-identified application.

Under 37 CFR 1.36 an attorney may withdraw only upon application to and approval by the Commissioner. It should be noted that a withdrawal is effective when approved, not when filed. For approval of such a request the following conditions must be met:

A) Each attorney of record must sign the notice of withdrawal, or the notice must contain a clear indication of one attorney signing on behalf of another, because the Office does not recognize law firms;
B) There must be at least 30 days between approval of the withdrawal and the later of the expiration date of a time period for reply or the expiration date of the period which can be obtained by a petition and fee for extension of time under 37 CFR 1.136(a);
C) A proper reason for the withdrawal as enumerated in 37 CFR 10.40(b) or subsection (1)-(6) of 37 CFR 10.40(c) must be provided;

The request to withdraw as attorney satisfies each of the conditions A) – C) above and the request is therefore **APPROVED**.

It is noted that all attorneys of record are listed for Customer Number 26986, as listed in the request for withdrawal of attorney, except for Mr. Randall B. Bateman. It is also noted that a phone call was made to Morris O'Bryant Compagni, resulting in confirmation that Mr. Randall B. Bateman, who is directed to in the new correspondence of address, remains as the **only** attorney of record in the Power of Attorney.

In summary, the request is **APPROVED**.

Kenneth J. Dorner, Special Programs Examiner
Patent Technology Center 3600
(703) 308-0866
Facsimile No.: (703) 605-0586

KJD/dxn; 6/9/03

UNITED STATES PATENT AND TRADEMARK OFFICE

COMMISSIONER FOR PATENTS
UNITED STATES PATENT AND TRADEMARK OFFICE
P.O. BOX 1450
ALEXANDRIA, VA 22313-1450
www.uspto.gov

#12

MAILED

FEB 1 7 2004

Office of the Group

Randall B. Bateman
P.O. Box 1319
Salt Lake City, UT 84110-1319

In re application of
Brant Monson
Application No. 09/771,119
Filed: January 26,2001
For: QUICK RELEASE SYSTEM FOR MOTORCYCLE BACKRESTS

DECISION ON REQUEST FOR WITHDRAWAL OF ATTORNEY

This is a decision on the request filed on November 21, 2003 under 37 CFR 1.36 and MPEP 402.06, requesting permission to withdraw as the attorney of record in the above-identified application.

The request is **NOT APPROVED as MOOT**.

Under 37 CFR 1.36 an attorney may withdraw only upon application to and approval by the Commissioner. It should be noted that a withdrawal is effective when approved, not when filed. Besides giving due notice to his or her client and delivering to the client all papers and property to which the client is entitled as specified under 37 CFR 10.40, approval of such a request requires that the following conditions be met:

A) Each attorney of record must sign the notice of withdrawal, or the notice must contain a clear indication of one attorney signing on behalf of another, because the Office does not recognize law firms;

B) A proper reason for the withdrawal as enumerated in 37 CFR 10.40(b) or subsection (1)-(6) of 37 CFR 10.40(c) must be provided; and

C) If withdrawal is requested in accordance with 37 CFR 10.40(c) above, there must be at least 30 days between approval of the withdrawal and the later of the expiration date of a time period for reply or the expiration date of the period which can be obtained by a petition and fee for extension of time under 37 CFR 1.136(a).

The request to withdraw as attorney in the above-identified application is not approved as moot because the power of attorney has already been withdrawn as per the Notice to that effect mailed June 16, 2003. As a result of this Notice, the sole attorney of record is Mr. Randall B. Bateman and the correspondence address is the following:

Randall B. Bateman
P.O. Box 1319
Salt Lake City, UT 84110-1319

Kenneth J. Dorner
Special Programs Examiner
Patent Technology Center 3600
(703) 308-0866

KJD/mjz: 2/10/04

cc:

Morriss O'Bryant Compagni, PC
136 South Main Street - Suite 700
Salt Lake City, UT 84101

UNITED STATES PATENT AND TRADEMARK OFFICE

Commissioner for Patents
United States Patent and Trademark Office
P.O. Box 1450
Alexandria, VA 22313-1450
www.uspto.gov

DARBY & DARBY PC
805 THIRD AVENUE
NEW YORK, NY 10022

COPY MAILED

JAN 13 2005

OFFICE OF PETITIONS

In re Application of	:
Satoshi Mizutani et al	:
Application No. 09/771,131	: DECISION GRANTING PETITION
Filed: January 26, 2001	: UNDER 37 CFR 1.313(c)(2)
Attorney Docket No. 2309/01213	:

This is a decision on the petition, filed January 12, 2005, under 37 CFR 1.313(c)(2) to withdraw the above-identified application from issue after payment of the issue fee.

The petition is **GRANTED**.

The above-identified application is withdrawn from issue for consideration of a submission under 37 CFR 1.114 (request for continued examination). See 37 CFR 1.313(c)(2).

Petitioner is advised that the issue fee paid on September 7, 2004 in the above-identified application cannot be refunded. If, however, the above-identified application is again allowed, petitioner may request that it be applied towards the issue fee required by the new Notice of Allowance.[1]

Telephone inquiries should be directed to the undersigned at (571) 272-3218.

This matter is being referred to Technology Center AU 1772 for processing of the request for continued examination under 37 CFR 1.114 and for consideration of the concurrently filed Information Disclosure Statement.

Frances Hicks
Petitions Examiner
Office of Petitions
Office of the Deputy Commissioner
for Patent Examination Policy

---

[1] *The request to apply the issue fee to the new Notice may be satisfied by completing and returning the new Issue Fee Transmittal Form PTOL-85(b), which includes the following language thereon: "Commissioner for Patents is requested to apply the Issue Fee and Publication Fee (if any) or re-apply any previously paid issue fee to the application identified above." Petitioner is advised that, whether a fee is indicated as being due or not, the Issue Fee Transmittal Form* ***must*** *be completed and timely submitted to avoid abandonment. Note the language in bold text on the first page of the Notice of Allowance and Fee(s) Due (PTOL-85).*

UNITED STATES PATENT AND TRADEMARK OFFICE

COMMISSIONER FOR PATENTS
UNITED STATES PATENT AND TRADEMARK OFFICE
WASHINGTON, D.C. 20231
www.uspto.gov

Paper No. 7

FENWICK & WEST
TWO PALO ALTO SQUARE
PALO ALTO, CA 94306

COPY MAILED

JAN 1 0 2002

OFFICE OF PETITIONS

In re Application of :
J. Dale Debber et al. :
Application No. 09/771,133 :
Filed: January 26, 2001 :
Attorney Docket No. 21532-04757 :

ON PETITION

This is a decision on the petition under 37 CFR 1.137(b), filed December 21, 2001, to revive the above-identified application.

The petition is **GRANTED**.

Telephone inquiries concerning this decision should be directed to Irvin Dingle at (703) 306-5684.

The application file is being forwarded to the Initial Patent Examination Unit.

Irvin Dingle
Petitions Examiner
Office of Petitions
Office of the Deputy Commissioner
for Patent Examination Policy

UNITED STATES PATENT AND TRADEMARK OFFICE

Commissioner for Patents
United States Patent and Trademark Office
Washington, D.C. 20231
www.uspto.gov

MAILED

MAY 23 2002

DIRECTOR'S OFFICE
TECHNOLOGY CENTER 3600

Paper No. 9

Mark E. Andrews
LaRiviere, Grubman & Payne, LLP
P.O. Box 3140
Monterey, California 93942

In re Application of: Larry Allen Wares	)	
Application No. 09/771,142	)	
Filed: January 26, 2001	)	
For: E-COMMERCE BID AND PROJECT MANAGEMENT SYSTEM AND METHOD FOR THE CONSTRUCTION INDUSTRY	)	**DECISION ON REQUEST FOR WITHDRAWAL AS ATTORNEY**

This is a decision on the Request to Withdraw from Representation filed February 12, 2002.

A grantable request to withdraw as attorney of record should indicate thereon the present mailing addresses of the attorney(s) who is/are withdrawing from the record and of the applicant. The request for withdrawal must be signed by every attorney seeking to withdraw or contain a clear indication that one attorney is signing on behalf of another/others. A request to withdraw will not be approved unless at least 30 (thirty) days would remain between the date of approval and the later of the expiration date of a time to file a response or the expiration date of the maximum time period which can be extended under 37 C.F.R. § 1.136(a). The effective date of withdrawal being the date of decision and not the date of request. See M.P.E.P. § 402.06. 37C.F.R. § 1.136 further requires that the applicant or patent owner be notified of the withdrawal of the attorney or agent.

The request is deficient in the following aspects: (1) the United Patent and Trademark Office (Office) does not recognize firms - each attorney for whom withdrawal is requested must be individually listed; (2) there is no statement that Mr. Andrews is ***authorized*** to sign on behalf of the other attorneys; (3) there is no indication that the applicant has been notified of the request for withdrawal. Therefore, the request is **DENIED**.

All future communications from the Office will continue to be directed to the above-listed address until otherwise notified by applicant. Applicant is reminded of the obligation to promptly notify the Office of any change in correspondence address to ensure receipt of all communications from the Office.

Vincent N. Trans
Special Programs Examiner
Technology Center 2100
Computer Architecture, Software, and Electronic Commerce
(703)305-9750

cc: Gates & Cooper, LLC
Howard Hughes Center
6701 Center Drive West, Suite 1050
Los Angeles, California 90045

UNITED STATES PATENT AND TRADEMARK OFFICE

Commissioner for Patents
United States Patent and Trademark Office
P.O. Box 1450
Alexandria, VA 22313-1450
www.uspto.gov

Paper No. 15

ALZA Corporation
1900 Charleston Road
PO Box 7210, M10-3
Mountain View, Ca 94039-7210

COPY MAILED

OCT 27 2003

OFFICE OF PETITIONS

In re Application of	:	
Danilo D. Lasic et al.	:	
Application No. 09/771,151	:	ON PETITION
Filed: January 26, 2001	:	
Attorney Docket No. 55325-8169.US00	:	

This is a decision on the petition under 37 CFR 1.137(b), filed July 30, 2003, to revive the above-identified application.

The petition is **GRANTED**.

The above-identified application became abandoned for failure to reply within the meaning of 37 CFR 1.113 in a timely manner in reply to the final Office action mailed December 18, 2002, which set a shortened statutory period for reply of three months. A three (3) month extension of time under the provisions of 37 CFR 1.136 was obtained on June 17, 2003. Accordingly, the application became abandoned on June 18, 2003.

The application is being forwarded to Technology Center AU 1615, for processing the Request for Continued Examination under 37 CFR 1.114 filed with the instant petition

Telephone inquiries concerning this decision should be directed to Latrice Bond at (703) 308-6911.

Latrice Bond

Latrice Bond
Petitions Examiner
Office of Petitions
Office of the Deputy Commissioner
for Patent Examination Policy

UNITED STATES PATENT AND TRADEMARK OFFICE

COMMISSIONER FOR PATENTS
UNITED STATES PATENT AND TRADEMARK OFFICE
WASHINGTON, D.C. 20231
www.uspto.gov

John W. Carpenter
CROSBY, HEAFEY, ROACH & MAY
P.O. Box 7936
San Francisco, CA 94120-7936

COPY MAILED Paper No. 6

JUN 14 2001

OFFICE OF PETITIONS
A/C PATENTS

In re Application of
Amnon Jonas and Menashe Shahar
Application No. 09/771,162
Filed: January 26, 2001
Attorney Docket No. 23600.00801

DECISION GRANTING PETITION

This is a decision on the petition under 37 CFR 1.10(c), filed February 20, 2001, requesting that the above-identified application be accorded a filing date of January 26, 2001, rather than the presently accorded filing date of January 27, 2001.

Petitioners allege that the application was deposited in Express Mail service on January 26, 2001. In support, the petition is accompanied by a copy of Express Mail Receipt No. EL588331238US (the same Express Mail number found on the original application papers located in the official file) showing a "date in" of January 26, 2001.

In view of the above, the petition is **GRANTED**.

Accordingly, the application is entitled to a filing date of January 26, 2001.

Since the instant petition has been granted, no petition fee is required, and thus, will be credited to deposit account no. 03-3821 as so authorized in the general authorization statement contained in the Response to Notice to file Missing Parts.

After this decision is mailed, the above-identified application will be forwarded to the Office of Initial Patent Examination for issuance of a corrected filing receipt showing a filing date of January 26, 2001. Thereafter, the application will be returned to Technology Center 2600 for examination in due course.

Telephone inquiries concerning this matter may be directed to Lesley Morris at (703) 306-0028.

For

Beverly M. Flanagan
Supervisory Petitions Examiner
Office of Petitions
Office of the Deputy Commissioner
for Patent Examination Policy

UNITED STATES PATENT & TRADEMARK OFFICE
Washington, D.C. 20231

REQUEST FOR PATENT FEE REFUND

1 Date of Request: 6/8/01

2 Serial/Patent # 09/771,162

	3 Please refund the following fee(s):	4 PAPER NUMBER	5 DATE FILED	6 AMOUNT
	Filing			$
	Amendment			$
	Extension of Time			$
	Notice of Appeal/Appeal			$
/	Petition	3	2/20/01	$ 130
	Issue			$
	Cert of Correction/Terminal Disc.			$
	Maintenance			$
	Assignment			$
	Other			$

7 TOTAL AMOUNT OF REFUND $ 130

8 TO BE REFUNDED BY:

- [ ] Treasury Check
- [ ] Credit Deposit A/C #:

9 03--3821

10 REASON:

- [ ] Overpayment
- [ ] Duplicate Payment
- [/] No Fee Due (Explanation):

Petition under 37 CFR 1.10(c) granted therefore no fee due

11 REFUND REQUESTED BY:

TYPED/PRINTED NAME: Lesley Morris TITLE: Detailee

SIGNATURE: Lesley D Morris PHONE: 703 306-0028

OFFICE: 4700

****

THIS SPACE RESERVED FOR FINANCE USE ONLY:

APPROVED: Diana Chase DATE: 6/14/01

Instructions for completion of this form appear on the back. After completion, attach white and yellow copies to the official file and mail or hand-carry to:

Office of Finance
Refund Branch
Crystal Park One, Room 802B

FORM PTO 1577
(01/90)

UNITED STATES PATENT AND TRADEMARK OFFICE

COMMISSIONER FOR PATENTS
UNITED STATES PATENT AND TRADEMARK OFFICE
P.O. BOX 1450
ALEXANDRIA, VA 22313-1450
WWW.USPTO.GOV

Paper No. None

Qualcomm Incorporated
Patents Department
5775 Morehouse Drive
San Diego CA 92121-1714

COPY MAILED

FEB 08 2005

OFFICE OF PETITIONS

In re Application of
Baaziz Achour
Application No. 09/771,210
Filed: January 24, 2001
Attorney Docket No. 990082
Title: SYSTEM AND METHOD FOR MINIMIZING HARDWARE AND MAXIMIZING CAPACITY IN A WIRELESS COMMUNICATIONS SYSTEM

DECISION GRANTING
PETITION UNDER 37 C.F.R. §1.137(b)

This is a decision on the petition filed on January 19, 2005, pursuant to 37 C.F.R. §1.137(b)[1], to revive the above-identified application.

The above-identified application became abandoned for failure to reply within the meaning of 37 CFR §1.113 in a timely manner to the final Office action mailed June 24, 2004, which set a shortened statutory period for reply of three (3) months. On December 8, 2004, an amendment was received, along with a three-month extension of time. On December 29, 2004, an advisory action was mailed to the applicant, indicating that the amendment would not be entered. No further extensions of time were requested, and no further amendments were received. Accordingly, the above-identified application became abandoned on December 25, 2004.

1 A grantable petition pursuant to 37 CFR 1.137(b) must be accompanied by:
(1) The reply required to the outstanding Office action or notice, unless previously filed;
(2) The petition fee as set forth in § 1.17(m);
(3) A statement that the entire delay in filing the required reply from the due date for the reply until the filing of a grantable petition pursuant to this paragraph was unintentional. The Commissioner may require additional information where there is a question whether the delay was unintentional, and;
(4) Any terminal disclaimer (and fee as set forth in § 1.20(d)) required pursuant to paragraph (d) of this section.

The petition contains the statement "this application became abandoned unintentional (sic)." 37 C.F.R. §1.137(b)(3) requires a statement that the entire delay in filing the required reply from the due date for the reply until the filing of a grantable petition pursuant to 37 C.F.R. §1.137(b) was unintentional. Since the statement contained in the instant petition varies from the language required by 37 C.F.R. §1.137(b)(3), the statement contained in the instant petition is being construed as the statement required by 37 C.F.R. §1.137(b)(3) and petitioner must notify the Office if this is not a correct interpretation of the statement contained in the instant petition.

Petitioner has filed the petition fee, a Request for Continued Examination (RCE) under 37 C.F.R. §1.114 as well as the associated fee, and has made a statement which is being construed as the proper statement of unintentional delay. The RCE has been accepted as the required reply under 37 C.F.R. §1.137(b)(1). The amendment shall serve as the required submission.

As such, the petition is **GRANTED**.

After this decision is mailed, the application will be forwarded to Technology Center 2600 for consideration of the submission under 37 C.F.R. §1.114.

The general phone number for the Office of Petitions which should be used for status requests is (571) 272-3282. Telephone inquiries regarding this decision should be directed to the undersigned at (571) 272-3225.

Paul Shanoski

Paul Shanoski
Senior Attorney
Office of Petitions
United States Patent and Trademark Office

UNITED STATES PATENT AND TRADEMARK OFFICE

Commissioner for Patents
United States Patent and Trademark Office
P.O. Box 1450
Alexandria, VA 22313-1450
www.uspto.gov

ANDERSON, KILL & OLICK, P.C.
1251 AVENUE OF THE AMERICAS
NEW YORK, NY 10020-1182

COPY MAILED

JAN 12 2007

OFFICE OF PETITIONS

In re Application of	:	
Chitradon et al.	:	
Application No.: 09/771214	:	DECISION ON
Filing or 371(c) Date: 01/26/2001	:	PETITION
Attorney Docket Number: DE-1213	:	

This is a decision in response to the Petition for Revival of Application Abandoned Unintentionally Under 37 CFR 1.137(b), filed September 11, 2006. The delay in treating this petition is regretted.

This Petition is hereby **granted**.

The above-identified application became abandoned for failure to timely reply to the final office action, mailed October 31, 2005. The Office action set a three (3) period for reply. Extensions of time under 37 CFR 1.136(a) were available. Applicant filed an Amendment and extension of time on May 5, 2006, however, the amendment failed to place the application in condition for allowance. Applicant was so notified in an Advisory Action mailed August 24, 2006. No complete and proper reply having been received, the application became abandoned on February 1, 2006.

Applicant files the instant petition and RCE, and submission in the form of the May 5, 2006 amendment. Accordingly, the petition is granted.

This application is being referred to Technology Center Art Unit 2624 for processing of the RCE and amendment.

Telephone inquiries concerning this decision should be directed to the undersigned at (571) 272-3232.

Derek L. Woods
Attorney
Office of Petitions

UNITED STATES PATENT AND TRADEMARK OFFICE

COMMISSIONER FOR PATENTS
UNITED STATES PATENT AND TRADEMARK OFFICE
P.O. BOX 1450
ALEXANDRIA, VA 22313-1450
www.uspto.go

Paper No. 14

KATTEN MUCHIN ZAVIS ROSENMAN
575 MADISON AVENUE
NEW YORK NY 10022-2585

MAIL

FEB 2 0 2004

DIRECTOR OFFICE
TECHNOLOGY CENTER 2600

In re Application of:
IWAMATSU, et al
Application No.: 09/771,229
Filed: January 26, 2001
For: **CLOCK PHASE DETECTING CIRCUIT AND CLOCK REGENERATING CIRCUIT EACH ARRNAGED IN RECEIVING UNIT OF MULTIPLEX RADIO EQUIPMENT**

DECISION ON PETITION UNDER 37 CFR § 1.181 TO WITHDRAW THE HOLDING OF ABANDONMENT

This is a decision on the petition filed October 10, 2003 under 37 C.F.R. § 1.181 to withdraw the holding of abandonment of the above-identified application.

This application was held abandoned for failure to respond in a timely and effective manner to the Non-Final Office Action mailed February 26, 2003. The application became abandoned when no further response was received. A Notice of Abandonment was mailed September 30, 2003.

Petitioner alleges to have timely filed a proper response to said Non-Final Office Action. In support, petitioner has provided evidence of a copy of a response to the Non-Final Office Action, a request for extension of time for three (3) months, and drawings mailed August 26, 2003, bearing an Express mail Receipt number EV332275680US. A review of the file record indicates that the original response and request for extension of time have been recently located and entered into the file.

Accordingly, the petition is **GRANTED**.

Therefore, the abandonment was the result of an Office error in not timely matching the response to the application file and therefore the application was not abandoned in fact. The Notice of Abandonment is hereby vacated and the holding of abandonment withdrawn. The Office regrets any inconvenience caused by the mailing of the Notice of Abandonment.

The application file is being forwarded to the TC2600 technical Support staff for entry of the Amendment filed August 26, 2003, and from there will be forwarded to the Examiner for appropriate action in due course.

Jin F. Ng, Director
Technology Center 2600
Communications

UNITED STATES PATENT AND TRADEMARK OFFICE

COMMISSIONER FOR PATENTS
UNITED STATES PATENT AND TRADEMARK OFFICE
P.O. BOX 1450
ALEXANDRIA, VA 22313-1450
www.uspto.gov

KATTEN MUCHIN ROSENMAN LLP
575 MADISON AVENUE
NEW YORK, NY 10022-2585

COPY MAILED

JAN 27 2006

OFFICE OF PETITIONS

ON PETITION

In re Application of :
Takanori Iwamatsu, et al. :
Application No. 09/771,229 :
Filed: January 26, 2001 :
Attorney Docket No. FUJS 13.045A :

This is a decision in response to the petition under 37 CFR 1.137(b), filed October 20, 2005, to revive the above-identified application.

The petition is **GRANTED**.

This application became abandoned for failure to timely file an Appeal Brief within two months of the January 28, 2005 date of the Notice of Appeal. A Notice of Abandonment was subsequently mailed on October 17, 2005.

The application is being revived for consideration of a Request for Continued Examination (RCE) under 37 CFR 1.114. Accordingly, the filing of the RCE on October 20, 2005, obviates the Notice of Appeal filed January 28, 2005.

37 CFR 1.137(b)(3) requires a statement that the entire delay in filing the required reply from the due date for the reply until the filing of a grantable petition pursuant to 37 CFR 1.137(b) was unintentional. Although the statement contained in the petition varies from the language required by 37 CFR 1.137(b)(3), the statement will be construed as the statement required by 37 CFR 1.137(b)(3). Petitioner must notify the Office if this is **not** a correct interpretation of the statement contained in the instant petition.

Telephone inquiries concerning this decision should be directed to the undersigned at (571) 272-3204.

The application file is being forwarded to Technology Center AU 2637, for further processing of the request for continued examination under 37 CFR 1.114.

Sherry D. Brinkley
Petitions Examiner
Office of Petitions

UNITED STATES PATENT AND TRADEMARK OFFICE

COMMISSIONER FOR PATENTS
UNITED STATES PATENT AND TRADEMARK OFFICE
WASHINGTON, D.C. 20231
www.uspto.gov

Paper No. 9

ARTHROCARE CORPORATION
680 VAQUEROS AVENUE
SUNNYVALE, CA 94085-3523

COPY MAILED

DEC 2 4 2002

OFFICE OF PETITIONS

In re Application of	:	
James L. Pacek et al	:	
Application No. 09/771,299	:	ON PETITION
Filed: January 25, 2001	:	
Attorney Docket No. C-11	:	

This is a decision on the petition under 37 CFR 1.137(b), filed November 14, 2002, to revive the above-identified application.

The petition is **GRANTED**.

The above-identified application became abandoned for failure to reply in a timely manner to the Notice to File Corrected Application Papers (Notice) mailed May 4, 2001. The Notice set a period for reply of two (2) months from the mail date of the Notice. No extensions of time under the provisions of 37 CFR 1.136(a) were obtained. Accordingly, the above-identified application became abandoned on July 5, 2001.

Telephone inquiries concerning this decision should be directed to Wan Laymon at (703) 305-9282.

The application file is being forwarded to the Office of Initial Patent Examination.

Wan Laymon
Wan Laymon
Petitions Examiner
Office of Petitions
Office of the Deputy Commissioner
for Patent Examination Policy

UNITED STATES PATENT AND TRADEMARK OFFICE

#15

Commissioner for Patents
United States Patent and Trademark Office
P.O. Box 1450
Alexandria, VA 22313-1450
www.uspto.gov

Paper no. 15

MAILED
FROM DIRECTORS OFFICE

JAN 05 2007

TECHNOLOGY CENTER 3600

SCHMEISER, MORELLE & WATTS
24 COMPUTER DR. WEST
ALBANY NY 12205

In re Application of	:	DECISION ON REQUEST
Stan Livingston	:	TO WITHDRAW
SERIAL NO.: 09/771,300	:	HOLDING OF
FILED: January 25, 2001	:	ABANDONMENT
FOR: CONFORMAL END-FIRE ARRAYS ON HIGH IMPEDANCE GROUND PLANE		

This is a decision on the request filed January 28, 2004 for withdrawal of the holding of abandonment in the above-referenced application. The application was abandoned for failure to timely-respond to the Office action mailed July 31, 2002. Applicant asserts that a response was in fact timely-filed and presents a copy of a USPS tracking receipt date-stamped by the PTO on February 5, 2004 .

The evidence is sufficient to show timely receipt of the response.

The holding of abandonment is WITHDRAWN.

Donald T. Hajec
Director, Technology Center 3660
(571) 272-5150

tht: 6-28-05

UNITED STATES PATENT AND TRADEMARK OFFICE

Commissioner for Patents
United States Patent and Trademark Office
P.O. Box 1450
Alexandria, VA 22313-1450
www.uspto.gov

AGENSYS C/O MORRISON & FOERSTER LLP
12531 HIGH BLUFF DRIVE
SUITE 100
SAN DIEGO CA 92130-2040

MAILED

FEB 24 2009

OFFICE OF PETITIONS

In re Application :
Aya Jacobovits et al. :
Application No. 09/771,312 : DECISION ON APPLICATION
Filed: January 26, 2001 : FOR PATENT TERM ADJUSTMENT
Attorney Docket No. **511582000100** :

This is in response to the APPLICATION FOR PATENT TERM ADJUSTMENT UNDER 37 CFR 1.705 filed December 15, 2008. Applicant requests that the determination of patent term adjustment be increased by 692 days from 606 days to 1298 days. This request is based in part on the Office taking in excess of three years to issue the patent.

To the extent that this application for patent term adjustment requests reconsideration of the patent term adjustment as it relates to the Office's failure to issue the patent within 3 years of the filing date, a decision is being **held in abeyance** until after the actual patent date. Knowledge of the actual date the patent issues is ordinarily required to calculate the amount, if any, of additional patent term patentee is entitled to for Office failure to issue the patent within 3 years. See § 1.703(b). It is noted that at the time of this decision, the patent has not issued.

Applicants are given **TWO (2) MONTHS** from the issue date of the patent to file a written request for reconsideration of the patent term adjustment for Office failure to issue the patent within 3 years. A copy of this decision should accompany the request. Applicants may seek such consideration without payment of an additional fee. However, as to all other bases for seeking reconsideration of the patent term adjustment indicated in the patent, all requirements of § 1.705(d) must be met. Requests for reconsideration on other bases must be timely filed and must include payment of the required fee.

With respect to the over 3 year calculation, rather than file the request for reconsideration of Patent Term Adjustment at the time of the mailing of the notice of allowance, applicants are advised that they may wait until the time of the issuance of the patent and file a request for reconsideration of the patent term pursuant to 37 CFR 1.705(d). The USPTO notes that it does not calculate the amount of time earned pursuant to 37 CFR 1.702(b) until the time of the issuance of the patent and accordingly, the Office will consider any request for reconsideration of the patent term adjustment due to an error in the calculation of 37 CFR 1.702(b) to be timely if the request for reconsideration is filed within two months of the issuance of the patent.

To the extent that applicant otherwise requests correction of the patent term adjustment at the time of the mailing of the Notice of Allowance, the application for patent term adjustment is GRANTED.

The Office has updated the PALM screen to reflect that the correct Patent Term Adjustment (PTA) determination at the time of the mailing of the Notice of Allowance is six hundred nineteen **(619)** days. A copy of the updated PALM screen, showing the correct determination, is enclosed.

On September 15, 2008, the Office mailed the Determination of Patent Term Adjustment under 35 U.S.C. 154(b) in the above-identified application. The Notice stated that the patent term adjustment to date is 606 days. The instant application for patent term adjustment was timely filed[1] on or before payment of the issue fee.

With respect to the patent term adjustment at the time of the mailing of the notice of allowance, applicants acknowledge the period of adjustment of 813 days for Office delay and the periods of reduction of 14, 87, 36, 70 and 9 days for applicant delay (in association with the responses filed March 21, 2008, August 7, 2007, November 3, 2006, October 13, 2005 and March 24, 2005).

Applicants dispute the entry of a period of reduction of 61 days for applicant's response to the Notice to File Missing Parts mailed January 10, 2002. Applicants argue that the response was filed May 28, 2002 and calculate Applicant delay at 48 days, but the Office incorrectly indicates the response was filed June 10, 2002 and incorrectly calculates 61 days of applicants' delay. Applicants assert that the correct number of days of delay is 48 in accordance with 35 USC 154(b)(2)(C)(ii) and 37 CFR 1.704(b). Thirteen (13) days are at issue.

The reduction of 61 days has been found to be incorrect. A review of the application file reveals that, as stated by applicants, their response to the Notice to File Missing Parts of Application mailed January 10, 2002, is of record in the application with a date of receipt by the Office of May 28, 2002. Furthermore, the response, an executed declaration pursuant to 37 CFR 1.63 and fee for late filing, substitute specification and two month extension of time request constituted a complete reply to the Notice. Thus, the Office should not have entered the date that the instant application was complete as June 10, 2002 or assessed applicants a delay of sixty-one (61) days. The period of reduction of 61 days is being removed and a period of reduction of forty-eight (48) days is being entered.

In view thereof, the correct patent term adjustment at the time of the mailing of the notice of allowance is six hundred nineteen (619) days.

---

[1] PALM records indicate that the issue fee was paid on December 15, 2008.

Applicants also note that a Supplemental Information Disclosure Statement was filed on November 10, 2008 and that the Patent Term Adjustment should be reduced by an additional 120 days of applicants' delay, in accordance with 37 CFR 1.704(c)(10).

As acknowledged by applicants, this disclosure is premature. The revised patent term adjustment indicated on the patent will include any periods of reduction (or adjustment) accrued after the mailing of the notice of allowance on September 15, 2008.

The Office acknowledges submission of the $200.00 fee set forth in 37 CFR 1.18(e). No additional fees are required.

The application is being forwarded to the Office of Data Management for issuance of the patent. The patent term adjustment indicated on the patent (as shown on the Issue Notification mailed about three weeks prior to patent issuance) will include any additional adjustment accrued both for Office delay in issuing the patent more than four months after payment of the issue fee and satisfaction of all outstanding requirements, and for the Office taking in excess of three years to issue the patent (to the extent that the three-year period does not overlap with periods already accorded).

Telephone inquiries specific to this decision should be directed to Senior Petitions Attorney Patricia Faison-Ball at (571) 272-3212.

Nancy Johnson
Senior Petitions Attorney
Office of Petitions

Enclosure: Copy of Revised PALM Screen

Day : Thursday
Date: 2/12/2009

PALM INTRANET

Time: 18:30:12

PTA Calculations for Application: 09/771312			
Application Filing Date:	01/26/2001	PTO Delay (PTO):	883
Issue Date of Patent:		Three Years:	0
Pre-Issue Petitions:	0	Applicant Delay (APPL):	277
Post-Issue Petitions:	0	Total PTA (days):	619
PTO Delay Adjustment:	13		

File Contents History

Number	Date	Contents Description	PTO	APPL	START
146	02/09/2009	ADJUSTMENT OF PTA CALCULATION BY PTO		48	
145	02/09/2009	ADJUSTMENT OF PTA CALCULATION BY PTO	61		
110	09/15/2008	MAIL NOTICE OF ALLOWANCE	70		90
109	09/12/2008	ISSUE REVISION COMPLETED			
108	09/12/2008	DOCUMENT VERIFICATION			
107	09/12/2008	NOTICE OF ALLOWANCE DATA VERIFICATION COMPLETED			
106	09/12/2008	EXAMINER'S AMENDMENT COMMUNICATION			
105	09/12/2008	NOTICE OF ALLOWABILITY			
104	03/21/2008	INFORMATION DISCLOSURE STATEMENT CONSIDERED			
100	07/13/2008	DATE FORWARDED TO EXAMINER			
99	06/18/2008	APPEAL BRIEF FILED			
98	06/18/2008	REQUEST FOR EXTENSION OF TIME - GRANTED			
97	06/18/2008	REQUEST FOR EXTENSION OF TIME - GRANTED			
96	06/26/2008	FILING RECEIPT - CORRECTED			
95	03/21/2008	INFORMATION DISCLOSURE STATEMENT (IDS) FILED		14	90
94	03/21/2008	INFORMATION DISCLOSURE STATEMENT (IDS) FILED			
93	03/18/2008	NOTICE -- DEFECTIVE APPEAL BRIEF			
92	03/14/2008	APPEAL BRIEF REVIEW COMPLETE			
91	03/14/2008	DATE FORWARDED TO EXAMINER			
90.1	03/07/2008	DEFECTIVE / INCOMPLETE APPEAL BRIEF FILED			
90	03/07/2008	APPEAL BRIEF FILED			

89	03/07/2008	REQUEST FOR EXTENSION OF TIME - GRANTED			
88	09/06/2007	MAIL ADVISORY ACTION (PTOL - 303)			
87	09/04/2007	ADVISORY ACTION (PTOL-303)			
86	08/09/2007	DATE FORWARDED TO EXAMINER			
85	08/07/2007	AMENDMENT/ARGUMENT AFTER NOTICE OF APPEAL			
84	08/07/2007	NOTICE OF APPEAL FILED		87	80
83	08/07/2007	REQUEST FOR EXTENSION OF TIME - GRANTED			
82	11/03/2006	INFORMATION DISCLOSURE STATEMENT CONSIDERED			
81	11/03/2006	INFORMATION DISCLOSURE STATEMENT (IDS) FILED			
80	02/12/2007	MAIL FINAL REJECTION (PTOL - 326)			
79	02/05/2007	FINAL REJECTION			
78	11/27/2006	DATE FORWARDED TO EXAMINER			
77	11/03/2006	RCE- AF PROCESSED			
76	11/27/2006	DATE FORWARDED TO EXAMINER			
75	11/03/2006	REQUEST FOR CONTINUED EXAMINATION (RCE)		36	67
74	11/27/2006	DISPOSAL FOR A RCE/CPA/129 (EXPRESS ABANDONMENT IF CPA)			
73	11/03/2006	REQUEST FOR EXTENSION OF TIME - GRANTED			
72	11/03/2006	WORKFLOW - REQUEST FOR RCE - BEGIN			
71	10/31/2006	MAIL ADVISORY ACTION (PTOL - 303)			
70	10/27/2006	ADVISORY ACTION (PTOL-303)			
69	10/10/2006	DATE FORWARDED TO EXAMINER			
68	09/28/2006	AMENDMENT AFTER FINAL REJECTION			
67	06/28/2006	MAIL FINAL REJECTION (PTOL - 326)			
66	06/26/2006	FINAL REJECTION			
65	04/08/2002	INFORMATION DISCLOSURE STATEMENT CONSIDERED			
64	02/10/2004	INFORMATION DISCLOSURE STATEMENT CONSIDERED			
63	04/14/2006	DATE FORWARDED TO EXAMINER			
62	04/07/2006	RESPONSE AFTER NON-FINAL ACTION			
61.7	02/10/2004	INFORMATION DISCLOSURE STATEMENT (IDS) FILED			

61	02/10/2004	INFORMATION DISCLOSURE STATEMENT (IDS) FILED			
60.7	04/08/2002	INFORMATION DISCLOSURE STATEMENT (IDS) FILED			
60	04/08/2002	INFORMATION DISCLOSURE STATEMENT (IDS) FILED			
59	12/18/2001	PRELIMINARY AMENDMENT			
58	01/13/2006	MAIL NON-FINAL REJECTION			
57	01/09/2006	NON-FINAL REJECTION			
56	10/25/2005	DATE FORWARDED TO EXAMINER			
55	10/13/2005	RESPONSE AFTER NON-FINAL ACTION		70	53
54	10/13/2005	REQUEST FOR EXTENSION OF TIME - GRANTED			
53	05/04/2005	MAIL NON-FINAL REJECTION			
52	05/02/2005	NON-FINAL REJECTION			
51	03/29/2005	DATE FORWARDED TO EXAMINER			
50	03/24/2005	RESPONSE TO ELECTION / RESTRICTION FILED		9	48
49	03/24/2005	REQUEST FOR EXTENSION OF TIME - GRANTED			
48	12/15/2004	MAIL RESTRICTION REQUIREMENT			
47	12/13/2004	REQUIREMENT FOR RESTRICTION / ELECTION			
46	12/03/2004	MAIL NOTICE OF RESCINDED ABANDONMENT			
45	12/03/2004	NOTICE OF RESCINDED ABANDONMENT IN TCS			
44	08/17/2004	MAIL-PETITION TO REVIVE APPLICATION - GRANTED			
43	07/21/2004	PETITION ENTERED			
42	06/16/2004	MAIL EXPRESS ABANDONMENT (DURING EXAMINATION)	813		-1
41	06/14/2004	EXPRESS ABANDONMENT (DURING EXAMINATION)			
40	06/03/2004	LETTER OF EXPRESS ABANDONMENT FILED			
39	06/03/2004	EXAMINER INTERVIEW SUMMARY RECORD (PTOL - 413)			
38	05/11/2004	CASE DOCKETED TO EXAMINER IN GAU			
37	04/22/2004	IFW TSS PROCESSING BY TECH CENTER COMPLETE			
36.7	02/28/2003	INFORMATION DISCLOSURE STATEMENT (IDS) FILED			
36	02/28/2003	INFORMATION DISCLOSURE STATEMENT (IDS) FILED			

35	04/14/2004	CORRESPONDENCE ADDRESS CHANGE			
34	03/23/2004	APPLICATION RETURN FROM OIPE			
33	03/23/2004	APPLICATION IS NOW COMPLETE			
32	03/23/2004	PRE-EXAM OFFICE ACTION WITHDRAWN			
31	03/23/2004	APPLICATION RETURN TO OIPE			
30	03/19/2004	APPLICATION RETURN FROM OIPE			
29	03/19/2004	APPLICATION IS NOW COMPLETE			
28	08/15/2003	CORRESPONDENCE ADDRESS CHANGE			
26	12/18/2002	ADDITIONAL APPLICATION FILING FEES			
25	12/18/2002	A SET OF SYMBOLS AND PROCEDURES, PROVIDED TO THE PTO ON A SET OF COMPUTER LISTINGS, THAT DESCRIBE IN			
24	10/10/2002	SEQUENCE ERRORS			
23	10/10/2002	CORRESPONDENCE ADDRESS CHANGE			
22	10/10/2002	SEQUENCE ERRORS			
21	06/10/2002	A SET OF SYMBOLS AND PROCEDURES, PROVIDED TO THE PTO ON A SET OF COMPUTER LISTINGS, THAT DESCRIBE IN		61	10
20	06/25/2002	PRE-EXAM OFFICE ACTION WITHDRAWN			
19	10/10/2002	APPLICATION RETURN TO OIPE			
18	10/01/2002	APPLICATION MADE UNAVAILABLE FOR EXAMINATION			
17	09/12/2002	CASE DOCKETED TO EXAMINER IN GAU			
16	07/24/2002	APPLICATION DISPATCHED FROM OIPE			
15	06/25/2002	APPLICATION IS NOW COMPLETE			
13	05/28/2002	ADDITIONAL APPLICATION FILING FEES			
12	05/28/2002	A STATEMENT BY ONE OR MORE INVENTORS SATISFYING THE REQUIREMENT UNDER 35 USC 115, OATH OF THE APPLIC			
11	05/28/2002	APPLICANT HAS SUBMITTED A NEW SPECIFICATION TO CORRECT CORRECTED PAPERS PROBLEMS			
10	01/10/2002	NOTICE MAILED--APPLICATION INCOMPLETE--FILING DATE ASSIGNED			
6	12/26/2001	CRF IS GOOD TECHNICALLY / ENTERED INTO DATABASE			
5	05/16/2001	XXXXX			
4	05/16/2001	MISCELLANEOUS INCOMING LETTER			
3	04/18/2001	MISCELLANEOUS OFFICE ACTION MAILED			
2	02/17/2001	IFW SCAN & PACR AUTO SECURITY REVIEW			

1	01/26/2001	INITIAL EXAM TEAM NN			

Search Another: Application# Search

EXPLANATION OF PTA CALCULATION

EXPLANATION OF PTE CALCULATION

To go back, right click here and select Back. To go forward, right click here and select Forward. To refresh, right click here and select Refresh.

Back to OASIS | Home page

UNITED STATES PATENT AND TRADEMARK OFFICE

Commissioner for Patents
United States Patent and Trademark Office
P.O. Box 1450
Alexandria, VA 22313-1450
www.uspto.gov

FULWIDER PATTON LLP
HOWARD HUGHES CENTER
6060 CENTER DRIVE, TENTH FLOOR
LOS ANGELES CA 90045

COPY MAILED

MAR 3 1 2008

In re Application of	:	
HASKAL, Aaron	:	
Application No. 09/771,319	:	DECISION ON PETITION
Filed: January 26, 2001	:	TO WITHDRAW
Attorney Docket No. **WEBTW-55765**	:	FROM RECORD

This is a decision on the Request to Withdraw as attorney or agent of record under 37 C.F.R. § 1.36(b), filed February 27, 2008.

The request is **APPROVED**.

A grantable request to withdraw as attorney/agent of record must be signed by every attorney/agent seeking to withdraw or contain a clear indication that one attorney is signing on behalf of another/others. A request to withdraw will not be approved unless at least 30 (thirty) days would remain between the date of approval and the later of the expiration date of a time to file a response or the expiration date of the maximum time period which can be extended under 37 C.F.R. § 1.136(a).

The request was signed by Thomas Runk on behalf of all attorneys of record who are associated with customer No. 24201. All attorneys/agents associated with the Customer Number 24201 have been withdrawn. Applicant is reminded that there is no attorney of record at this time.

The request to change the correspondence of record is not acceptable as the requested correspondence address is not that of: (1) the first named signing inventor; or (2) an intervening assignee of the entire interest under 37 C.F.R 3.71. All future communications from the Office will be directed to the signing inventor at the first copied address below until otherwise properly notified by the applicant.

There is an outstanding Office action mailed December 27, 2005 that requires a reply from the applicant.

Telephone inquiries concerning this decision should be directed to Tredelle Jackson at 571-272-2783.

Tredelle D. Jackson
Petitions Examiner
Office of Petitions

cc: **AARON HASKAL**
#7 SADDELBOW LANE
ROLLING HILLS ESTATES, CA 90274

cc: **AARON HASKAL**
C/O ROBERT L. B. DIENER, ESQ.
LAW OFFICES OF ROBERT DIENER
122 OCEAN PARK BLVD., SUITE 307
SANTA MONICA, CA 90405

UNITED STATES PATENT AND TRADEMARK OFFICE

Commissioner for Patents
United States Patent and Trademark Office
P.O. Box 1450
Alexandria, VA 22313-1450
www.uspto.gov

SCHWEGMAN, LUNDBERG,
WOESSNER & KLUTH, P.A.
P.O. BOX 2938
MINNEAPOLIS, MN 55402

COPY MAILED
JUN 0 2 2006
OFFICE OF PETITIONS

In re Application of

Larkin, et al.

Application No. 09/771,346

Filed: January 26, 2001

Attorney Docket No. 13841.016US1

DECISION ON PETITION

This is a decision on the petition under 37 CFR 1.137(b), filed March 13, 2006, to revive the above-identified application.

The petition is **GRANTED**.

The above-cited application became abandoned for failure to reply in a timely manner to the final Office action mailed January 25, 2005, which set a shortened statutory period for reply of three (3) months. Extension of the time set for reply were available pursuant to 37 CFR 1.136(a). A response was not received within the allowed period, and the application became abandoned on April 26, 2005. A Notice of Abandonment was mailed on August 12, 2005.

The Request for Continued Examination, filed March 13, 2006, is noted.

The request for an extension of time within the third month, filed March 13, 2006, is noted, but cannot be granted and is not necessary as the request was made outside the maximum period for reply and when the application was already in an abandoned status. The amount of $1,020.00 will be refunded to deposit account 19-0743, in due course.

The application is being forwarded to Technology Center 2100, GAU 2151 for further processing.

Telephone inquiries concerning this decision should be directed to the undersigned at (571) 272-3222.

Kenya A. McLaughlin
Petitions Attorney
Office of Petitions

UNITED STATES PATENT AND TRADEMARK OFFICE

COMMISSIONER FOR PATENTS
UNITED STATES PATENT AND TRADEMARK OFFICE
P.O. BOX 1450
ALEXANDRIA, VA 22313-1450
www.uspto.gov

Paper No.

FISH & RICHARDSON PC
P.O. BOX 1022
MINNEAPOLIS, MN 55440-1022

COPY MAILED

SEP 2 0 2006

OFFICE OF PETITIONS

In re Patent No. 6,957,150	:	DECISION ON REQUEST
Parris et al.	:	FOR RECONSIDERATION OF
Issue Date: October 18, 2005	:	PATENT TERM ADJUSTMENT
Application No. 09/771,383	:	and
Filed: January 25, 2001	:	NOTICE OF INTENT TO ISSUE
Attorney Docket No. 2368/12	:	CERTIFICATE OF CORRECTION

This is a decision on the "REQUEST FOR RECONSIDERATION OF PATENT TERM ADJUSTMENT UNDER 37 C.F.R. § 1.705(d)" filed December 19, 2005. Patentees request that the Patent Term Adjustment for the above-identified patent be set at 246 days.

The request for reconsideration of the patent term adjustment indicated in the patent is **GRANTED**.

The patent term adjustment indicated in the patent is to be corrected by issuance of a certificate of correction showing a revised Patent Term Adjustment of two hundred forty-six (246) days.

On October 18, 2005, the above-identified application matured into U.S. Patent No. 6,957,150. The instant request for reconsideration filed December 19, 2005 (certificate of mailing dated December 16, 2005) was timely filed within 2 months of the date the patent issued. See § 1.705(d). The Patent issued with a revised Patent Term Adjustment of 232 days. Patentees dispute the reduction of 14 days associated with a "miscellaneous incoming letter" received in the Office on December 27, 2004[1].

[1] Patentees are reminded that any request for reconsideration under 37 CFR 1.705(d) that raises issues that were raised, or could have been raised, in an application for patent term adjustment under 37 CFR 1.705(b) shall be dismissed as untimely as to those issues. Accordingly, consideration on instant request is limited to the dispute of the reduction pursuant to § 1.704(c)(10).

Patentees state that the paper filed on that date was an Issue Fee Payment and thus, no reduction is warranted.

Patentees' contention is well taken. As stated in MPEP 2732:

> The submission of the following papers after a "Notice of Allowance" is not considered a failure to engage in reasonable efforts to conclude processing or examination of an application: (1) Fee(s) Transmittal (PTOL-85B); (2) Power of Attorney; (3) Power to Inspect; (4) Change of Address; (5) Change of Status (small/not small entity status); (6) a response to the examiner's reasons for allowance or a request to correct an error or omission in the "Notice of Allowance" or "Notice of Allowability;" and (7) letters related to government interests (e.g., those between NASA and the Office).

The record has been reviewed and it has been confirmed that the paper filed on December 27, 2004 transmitted the Issue Fee payment. The reduction of 14 days has been removed.

In view thereof, the patent term adjustment indicated on the patent should be two hundred forty-six (246) days.

The Office acknowledges submission of the $200.00 fee set forth in 37 CFR 1.18(e). No additional fees are required.

The application file is being forwarded to the Certificates of Correction Branch for issuance of a certificate of correction in order to rectify this error. The Office will issue a certificate of correction indicating that the term of the above-identified patent is extended or adjusted by TWO HUNDRED FORTY-SIX (246) days.

Telephone inquiries specific to this matter should be directed to the undersigned at (571) 272-3219.

Nancy Johnson

Nancy Johnson
Senior Petitions Attorney
Office of Petitions

Enclosure: Copy of DRAFT Certificate of Correction

UNITED STATES PATENT AND TRADEMARK OFFICE

CERTIFICATE OF CORRECTION

PATENT : 6,957,150 B2

DATED : October 18, 2005

INVENTOR(S) : Parris et al.

DRAFT

It is certified that error appears in the above-identified patent and that said Letters Patent is hereby corrected as shown below:

On the cover page,

[*] Notice: Subject to any disclaimer, the term of this patent is extended or adjusted under 35 USC 154(b) by (232) days

Delete the phrase "by 232" and insert – by 246 days--

UNITED STATES PATENT AND TRADEMARK OFFICE

COMMISSIONER FOR PATENTS
UNITED STATES PATENT AND TRADEMARK OFFICE
WASHINGTON, D.C. 20231
www.uspto.gov

Paper No. 6

Alan H. Thompson
Assistant Laboratory Counsel
Lawrence Livermore National Laboratory
P.O. Box 808, L-703
Livermore, CA 94551

COPY MAILED
MAY 0 8 2003
OFFICE OF PETITIONS

In re Application of :
Luis E. Zapata :
Application No. 09/771,387 : ON PETITION
Filed: January 26, 2001 :
Attorney Docket No. IL-10792 :

This is a decision on the petition under 37 CFR 1.137(b), filed April 24, 2003, to revive the above-identified application.

The petition is **GRANTED**.

The above-identified application became abandoned for failure to reply in a timely manner to the Notice To File Corrected Application Papers mailed March 12, 2001. The Notice set a period for reply of two(2) months from the mail date of the Notice. No extensions of time under the provisions of 37 CFR 1.136(a) were obtained. Accordingly, the above-identified application became abandoned on May 13, 2001.

The file does not indicate a change of address has been submitted, although the address given on the petition slightly differs from the address of record. If appropriate, a change of address should be filed in accordance with MPEP 601.03.

Telephone inquiries concerning this decision should be directed to Cheryl Gibson-Baylor at (703)308-5111, or in her absence, Sherry Brinkley at (703)305-9220.

The application file is being forwarded to Office of Initial Patent Examination for further processing.

Cheryl Gibson Baylor

Cheryl Gibson-Baylor
Petitions Examiner
Office of Petitions
Office of the Deputy Commissioner
for Patent Examination Policy

Sherry Brinkley

Sherry Brinkley
Petitions Examiner

UNITED STATES PATENT AND TRADEMARK OFFICE

Commissioner for Patents
United States Patent and Trademark Office
P.O. Box 1450
Alexandria, VA 22313-1450
www.uspto.gov

MAY 09 2007

CHARLES N. QUINN
FOX ROTHSCHILD LLP
2000 MARKET STREET, 10TH FLOOR
PHILADELPHIA PA 19103

In re Application of: PELLERIN, DANIEL Serial No.: 09/771,416 Filed: Jan. 26, 2001 Docket: 13493 Title: UNIVERSAL CLEAT	DECISION ON PETITION

This is a decision on the petition filed on Oct. 10, 2006 seeking reversal of the objection to the specification for containing new matter. The petition is being considered pursuant to 37 CFR 1.181.

The petition is **DISMISSED**.

In the petition, the petitioner requests a review of the examiner's objection to the specification under 35 USC 132 for introducing new matter into the disclosure. The examiner objected to the disclosure because the newly included limitation "has a generally isosceles and/or equilaterally triangular shaped recess formed about the receptacle" was not supported by the original disclosure. Petitioner believes that the objection to the specification is in error and requests review and relief therefrom.

The record shows that:

1) On Jul. 13, 2004, the examiner issued a final Office action. In the final Office action, the examiner rejected claims 10-26 under 35 USC 112 1st paragraph because the subject matter added to the claims in the amendment filed Apr. 15, 2004 included new matter. Specifically, the examiner stated that the following limitations constituted new matter: "with a longest side of said three sides of said base being shorter than the longest side of any of said triangular recesses" in claims 10-11; "with a longest side of said three sides of said base being shorter than the shortest side of any said triangular recesses" in claim 15; "with a longest side being shorter than the longest of any of said straight line sides of the recesses" in claim 18; "a longest side of said three sides of said base being shorter than the shortest side of any of said triangular recesses" in claim 19; and "a longest side of said three sides of said base being shorter than the shortest side of any of said triangular recesses" in claim 23. In addition, the examiner objected to

the specification under 35 USC 132 because the phrase "has a generally isosceles and/or equilaterally triangular shape recess formed about the receptacle" added in an amendment filed May 20, 2003 was not supported by the original disclosure.

2) On Nov. 17, 2004, the petitioner filed an after final amendment under 37 CFR 1.116.
3) On Feb. 2, 2005, the examiner denied entry of the after final amendment filed Nov. 17, 2004 and reopened prosecution of the application by issuing a new non-final Office action. The examiner discovered new references and reopened prosecution to reject previously allowable claims 4-7 and 9. The examiner repeated the 35 USC 112 1st paragraph rejection of claims 10-26 and the objection under 35 USC 132 of the specification.
4) On Aug. 4, 2005, the petitioner filed an amendment to the claims and argued that the features added in claims 10-26 and added to the specification amendment were fully supported by the original drawings.
5) On Oct. 20, 2005, the examiner issued a final Office action and maintained the new matter rejection of claims 10-26 under 35 USC 112 1st paragraph. Included in the 35 USC 112 1st paragraph rejection was a rejection addressing newly presented limitation "one piece molded plastic" which was added to claim 10 in the amendment filed Oct. 20, 2005. The examiner stated that this limitation also constituted new matter. In addition, the examiner maintained the objection under 35 USC 132 because the amendment to the specification filed May 20, 2003 included new matter added to the disclosure.
6) On Oct. 10, 2006, the petitioner filed the current petition requesting reversal of the objection to the specification for containing new matter

Discussion and Analysis

37 CFR 41.31(a)(1) states:

Every applicant, any of whose claims has been twice rejected, may appeal from the decision of the examiner to the Board by filing a notice of appeal accompanied by the fee set forth in § 41.20(b)(1) within the time period provided under § 1.134 of this title for reply.

37 CFR 1.181(a)(1) states:

Petition may be taken to the Director: From any action or requirement of any examiner in the ex parte prosecution of an application, or in ex parte or inter partes prosecution of a reexamination preceding which is not subject to appeal to the Board of Patent Appeals and Interferences or to the court.

MPEP 2163.06 Relationship of Written Description Requirement to New Matter, states:

II. REVIEW OF NEW MATTER OBJECTIONS AND/OR REJECTIONS

A rejection of claims is reviewable by the Board of Patent Appeals and Interferences, whereas an objection and requirement to delete new matter is subject to supervisory review by petition under 37 CFR 1.181. If both the claims and specification contain new matter either directly or indirectly, and there has been both rejection and objection by the examiner, the issue becomes appealable and should not be decided by petition.

A review of the entire record of the application reveals that the petitioner and the examiner have arrived at a clear issue with respect to whether the limitations added to claims 10-26 constitute new matter or not. The examiner's position is that the original disclosure does not support the limitations presented in claims 10-26 and therefore constitutes new matter under 35 USC 112 1st

paragraph. The petitioner's position is that claims 10-26 are clearly supported by the original drawing figures. On page 1 of the petition, petitioner seeks to " ... exercise the Commissioner's supervisory authority to require the examiner to recognize the drawings submitted with a patent application constitute a portion of the disclosure of the patent application and that such drawings constituting a portion of the disclosure may be used as a basis, in whole or in part, for claims in the patent application.". [emphasis added]. In addition, petitioner argues on pages 8-10 of the petition that "... the drawings constitute a part of the disclosure of the subject matter to which a patent application is directed and hence that the drawings can serve as a basis for claims in the application, whether those claims filed with the application or added to the application during prosecution, the law is well established and uniformly supportive of that position.", "... which may be used to support new claims and claim amendments during the course of prosecution of the application.", and "This error continues to deprive applicant of the right to solicit claims using the description of the structure shown in Figures 8 through 11 to define the environment in which the baseball cleat subject matter of the invention functions.". [emphasis added].

Applying the plain language of 37 CFR 1.181(a)(1), it is clear that petitioner's arguments will not support the requested relief, because the relief requested is simply not the type of relief that can be obtained by petition. The issues presented by petitioner are clearly directed to the propriety of the examiner's rejection of the claims under 35 USC 112 1st paragraph. The question of whether the claims should be rejected under 35 USC 112 1st paragraph or not is clearly an appealable issue under 37 CFR 41.31(a)(1).

Petitioner also requests relief from the objection to the specification under 35 USC 132 because petitioner believes the phrase "has a generally isosceles and/or equilaterally triangular shape recess formed about the receptacle" added in an amendment filed May 20, 2003, is fully supported by the original drawing figures. However, in view of MPEP 2163.06, if both the claims and specification contain new matter either directly or indirectly, and there has been both rejection and objection by the examiner, the issue becomes appealable and should not be decided by petition. In the instant application, both the claims and specification contain new matter directly. Petitioner's position is that the claim amendments and specification amendments are fully supported by original drawing figures 8-11. The amendments to the claims describe the purported triangular shape of the recess shown in the drawings. The amendments to the specification also describe the purported triangular shape of the recess shown in the drawings. The examiner has issue with the way the recesses are described in both the claims and the specification. Because there has been both a new matter rejection and objection, the issue becomes appealable and should not be decided by petition. Therefore, the relief requested by petitioner cannot be granted by petition.

Conclusion

For the foregoing reasons, the relief requested by the petitioner will not be granted. Because there is both a rejection under 35 USC 112 1st paragraph for new matter and an objection the the specification under 35 USC 132 for new matter, the issue becomes an appealable one and will not be decided by petition.

The application is being forwarded to Supervisory Patent Examiner of Art Unit 3728 for further processing. Any request for reconsideration of this decision must be submitted within TWO (2) MONTHS from the mail date of this decision, 37 CFR 1.181(f). No extension of time under 37 CFR 1.136(a) is permitted. The reconsideration request should include a cover letter entitled "Renewed Petition under 37 CFR 1.181". Any inquiry regarding this decision should be directed to Marc Jimenez, Training Quality Assurance Specialist, at (571) 272-4530.

PETITION DISMISSED

Frederick R. Schmidt, Director
Technology Center 3700

OIPE JC44
APR 16 2001
PATENT & TRADEMARK OFFICE

UNITED STATES PATENT AND TRADEMARK OFFICE

COMMISSIONER FOR PATENTS
UNITED STATES PATENT AND TRADEMARK OFFICE
WASHINGTON, D.C. 20231
www.uspto.gov

APPLICATION NUMBER	FILING/RECEIPT DATE	FIRST NAMED APPLICANT	ATTORNEY DOCKET NUMBER
09/771,439	01/26/2001	Kazuko Matsumoto	TOYAM67.001AUS

CONFIRMATION NO. 8038

FORMALITIES LETTER

OC000000005829123

20995
KNOBBE MARTENS OLSON & BEAR LLP
620 NEWPORT CENTER DRIVE
SIXTEENTH FLOOR
NEWPORT BEACH, CA 92660

OIPE JC44
APR 14 2001
PATENT & TRADEMARK OFFICE

MAIL DATE CANCELLED

Date Mailed: 03/06/2001

NOTICE TO FILE MISSING PARTS OF NONPROVISIONAL APPLICATION

04/18/2001 SMINASS1 00000049 09771439
01 FC:105 130.00 OP

FILED UNDER 37 CFR 1.53(b)

Filing Date Granted

An application number and filing date have been accorded to this application. The item(s) indicated below, however, are missing. Applicant is given TWO MONTHS from the date of this Notice within which to file all required items and pay any fees required below to avoid abandonment. Extensions of time may be obtained by filing a petition accompanied by the extension fee under the provisions of 37 CFR 1.136(a).

- The oath or declaration is missing.
- To avoid abandonment, a late filing fee or oath or declaration surcharge as set forth in 37 CFR 1.16(e) of $130 for a non-small entity, must be submitted with the missing items identified in this letter.
- **The balance due by applicant is $ 130.**

A copy of this notice MUST be returned with the reply.

Customer Service Center
Initial Patent Examination Division (703) 308-1202
PART 2 - COPY TO BE RETURNED WITH RESPONSE

N Sector #

PATENT

Case Docket No. TOYAM67.001AUS
Date: April 9, 2001

MAIL DATE CANCELLED

OIPE JC44 APR 1 4 2001 PATENT & TRADEMARK OFFICE

IN THE UNITED STATES PATENT AND TRADEMARK OFFICE

Applicant(s) : Kazuo Matsumoto

App. No. : 09/771,439

Filed : January 26, 2001

For : METHOD FOR SEPARATING AND COLLECTING NUCLEIC ACIDS

OIPE JC44 APR 1 6 2001 PATENT & TRADEMARK OFFICE

Group Art Unit : 1743

I hereby certify that this correspondence and all marked attachments are being deposited with the United States Postal Service as first class mail in an envelope addressed to: Assistant Commissioner for Patents, Washington, D.C. 20231, on

April 9, 2001
(Date)

Katsuhiro Arai, Reg. No. 43,315

TRANSMITTAL LETTER

ASSISTANT COMMISSIONER FOR PATENTS
WASHINGTON, D.C. 20231

ATTENTION: BOX MISSING PARTS

Dear Sir:

In response to the Notice to File Missing Parts of Application Under 37 CFR 1.53(f), which was mailed by the Office on March 6, 2001, enclosed are:

(X) A Declaration and Power of Attorney.

(X) Information Disclosure Statement; PTO-1449 with one (1) reference.

(X) A Notice to File Missing Parts.

(X) Return prepaid postcard.

(X) Fees as calculated below:

SURCHARGE 37 CFR 1.16(e)	$ + 130
TOTAL FEES SUBMITTED HEREWITH	$ 130

OIPE JC44
APR 1 2001
MAIL DATE CANCELLED
OIPE JC44
APR 1 6 2001
PATENT & TRADEMARK OFFICE

PATENT

Case Docket No. TOYAM67.001AUS
Date: April 9, 2001

(X) A check in the amount of $130.00 to cover the above fees is enclosed.

(X) The Commissioner is hereby authorized to charge any additional fees which may be required, now or in the future, or credit any overpayment, to Account No. 11-1410. A duplicate copy of this sheet is enclosed.

Katsuhiro Arai
Registration No. 43,315
Agent of Record

H:\DOCS\KOA\KOA-7270.DOC
040901

UNITED STATES PATENT AND TRADEMARK OFFICE

COMMISSIONER FOR PATENTS
UNITED STATES PATENT AND TRADEMARK OFFICE
P.O. BOX 1450
ALEXANDRIA, VA 22313-1450
www.uspto.gov

MAILED

JUN 24 2004

DIRECTOR'S OFFICE
TECHNOLOGY CENTER 3600

Cathy D. Santa Cruz
7630 Tholl Drive
Reno, NV 89506

In re Application of
Cathy D. Santa Cruz et al.
Application No. 09/771,457
Filed: January 18, 2001
For: VERTICAL TELESCOPIC STAGE ACCESSORIES DEVICE

DECISION ON PETITION TO WITHDRAW THE HOLDING OF ABANDONMENT

This is in reply to applicants' renewed petition to withdraw the holding of abandonment under 37 CFR 1.181, filed in the United States Patent and Trademark Office on May 28, 2004.

The petition is **GRANTED** in view of the following evidence of timely filing :

☐ Postcard receipt being dated_____.

☐ USPTO return facsimile receipt dated _____ which identifies the application by serial number and the type of Response that was filed on that date.

☐ Certificate of Mailing/Transmission signed on _____. and supported by a statement under 37 C.F.R. 1.8(b)(3).

☐ Hand Delivery Receipt of the specific documents submitted dated _____.

☐ Certificate of Transmission of CPA under 37 C.F.R. 1.6 filed on _____.

☒ Express Mail Receipt under 37 C.F.R. 1.10 dated December 4, 2002.

This application is being forwarded to the Supervisory Legal Instruments Examiner for entry of the response filed with the petition, then to the examiner for prompt action on the response.

KJD/vdb: 6/2/04

KENNETH J. DORNER
SPECIAL PROGRAMS EXAMINER
TECHNOLOGY CENTER 3600

UNITED STATES PATENT AND TRADEMARK OFFICE

COMMISSIONER FOR PATENTS
UNITED STATES PATENT AND TRADEMARK OFFICE
P.O. BOX 1450
ALEXANDRIA, VA 22313-1450
www.uspto.gov

MAILED

APR 30 2004

DIRECTOR'S OFFICE
TECHNOLOGY CENTER 3600

Cathy D. Santa Cruz
7630 Tholl Drive
Reno NV 89506

In re Application of
Cathy D. Santa Cruz et al.
Application No.09/771,457
Filed: January 18, 2001
For: VERTICAL TELESCOPIC STAGE ACCESSORIES DEVICE

DECISION ON PETITION TO WITHDRAW THE HOLDING OF ABANDONMENT

This is in reply to applicants' communication, filed in the United States Patent and Trademark Office on July 17, 2003. This document is being treated as a petition to withdraw the holding of abandonment.

The petition is **DISMISSED**.

A review of the file record indicates that the application was held abandoned for failure to timely respond to the letter of Informal Amendment mailed November 6, 2002.

The requirements for filing a grantable petition in the case of a correspondence mailed using "Express Mail" and never received by the Office are outlined in 37 CFR 1.10(e) and include the following:

(A) Be filed promptly after the person becomes aware that the Office has no evidence of receipt of the correspondence;

(B) Include a showing that the "Express Mail" mailing label was placed on each piece of correspondence prior to original mailing;

(C) Include a true copy of the originally deposited correspondence showing the number of the "Express Mail" mailing label thereon, a copy of any returned post card receipt, a copy of the "Express Mail" mailing label showing the "date-in" or other official notation entered by the USPS; and

(D) Include a statement, signed by the person who deposited the documents as "Express Mail" with the USPS, setting forth the date and time of deposit, and declaring that the copies of the correspondence, "Express Mail" mailing label, and returned postcard receipt accompanying the petition are true copies of the correspondence, mailing label and returned postcard receipt originally mailed or received.

In this case, applicants' petition lacks item (D). A statement signed by the person who signed the Express Mail receipt, attesting on a personal knowledge basis to the timely transmission of the response on the date indicated on the Express Mail receipt is required.

Any request for reconsideration of this decision must be submitted within TWO (2) MONTHS from the mail date of this decision. Extensions of time under 37 CFR 1.136(b) are permitted. The reconsideration request should include a cover letter entitled "Renewed Petition to Withdraw the Holding of Abandonment Under 37 CFR 1.81."

Randolph A. Reese
Special Programs Examiner
Technology Center 3600
(703) 308-2121

RAR/ekn 4/29/04

UNITED STATES PATENT AND TRADEMARK OFFICE

COMMISSIONER FOR PATENTS
UNITED STATES PATENT AND TRADEMARK OFFICE
P.O. BOX 1450
ALEXANDRIA, VA 22313-1450
www.uspto.gov

MAILED

JUN 24 2004

DIRECTOR'S OFFICE
TECHNOLOGY CENTER 3600

Cathy D. Santa Cruz
7630 Tholl Drive
Reno, NV 89506

In re Application of
Cathy D. Santa Cruz et al.
Application No. 09/771,457
Filed: January 18, 2001
For: VERTICAL TELESCOPIC STAGE ACCESSORIES DEVICE

DECISION ON PETITION TO WITHDRAW THE HOLDING OF ABANDONMENT

This is in reply to applicants' renewed petition to withdraw the holding of abandonment under 37 CFR 1.181, filed in the United States Patent and Trademark Office on May 28, 2004.

The petition is **GRANTED** in view of the following evidence of timely filing :

☐ Postcard receipt being dated_____.

☒ USPTO return facsimile receipt dated _____ which identifies the application by serial number and the type of Response that was filed on that date.

☐ Certificate of Mailing/Transmission signed on _____. and supported by a statement under 37 C.F.R. 1.8(b)(3).

☐ Hand Delivery Receipt of the specific documents submitted dated _____.

☐ Certificate of Transmission of CPA under 37 C.F.R. 1.6 filed on _____.

☒ Express Mail Receipt under 37 C.F.R. 1.10 dated December 4, 2002.

This application is being forwarded to the Supervisory Legal Instruments Examiner for entry of the response filed with the petition, then to the examiner for prompt action on the response.

KJD/vdb: 6/2/04

KENNETH J. DORNER
SPECIAL PROGRAMS EXAMINER
TECHNOLOGY CENTER 3600

UNITED STATES PATENT AND TRADEMARK OFFICE

Commissioner for Patents
United States Patent and Trademark Office
P.O. Box 1450
Alexandria, VA 22313-1450
www.uspto.gov

HUANG CHUANG-PAN
SEC 1
NO. 52, ALLEY 41, LANE, AN-HO RD.
TAINAN CITY 9F 3R TW TAIWAN

COPY MAILED

FEB 2 0 2007

OFFICE OF PETITIONS

In re Application of :
CHUANG-PAN, et al. :
Application No. 09/771,516 :
Filed: January 17, 2001 :
Attorney Docket No. :

DECISION ON PETITION

This is a decision on the petition under the unintentional provisions of 37 CFR 1.137(b), filed June 22, 2006, to revive the above-identified application.

The petition is **DISMISSED**.

The application became abandoned for failure to reply in a timely manner to the non-final Office action mailed, December 10, 2002, which set a shortened statutory period for reply of three (3) months. No extensions of time under the provisions of 37 CFR 1.136(a) were obtained. Accordingly, the application became abandoned on March 11, 2003.

A grantable petition under 37 CFR 1.137(b) must be accompanied by: (1) the required reply, unless previously filed; (2) the petition fee as set forth in 37 CFR 1.17(m); (3) a statement that the entire delay in filing the required reply from the due date for the reply until the filing of a grantable petition pursuant to 37 CFR 1.137(b) was unintentional; and (4) any terminal disclaimer (and fee as set forth in 37 CFR 1.20(d)) required by 37 CFR 1.137(d). Where there is a question as to whether either the abandonment or the delay in filing a petition under 37 CFR 1.137 was unintentional, the Director may require additional information. See MPEP 711.03(c)(II)(C) and (D). The instant petition lacks item(1) the required reply. For applicants conveyance, a copy of the non-final office action previously mailed on December 10, 2002 is enclosed with this decision.

Any request for reconsideration of this decision must be submitted within TWO (2) MONTHS from the mail date of this decision. Extensions of time under 37 CFR 1.136(a) are permitted.

The reconsideration request should include a cover letter entitled "Renewed Petition under 37 CFR 1.137(b)." This is **not** a final agency action within the meaning of 5 U.S.C. § 704.

Further correspondence with respect to this matter should be addressed as follows:

By Mail: Mail Stop PETITION
Commissioner for Patents
P. O. Box 1450
Alexandria, VA 22313-1450

By hand: U. S. Patent and Trademark Office
Customer Service Window, Mail Stop Petitions
Randolph Building
401 Dulany Street
Alexandria, VA 22314

The centralized facsimile number is **(571) 273-8300.**

The person signing the instant petition requests a change of correspondence address to the address given in the instant petition. There is, however, no indication that the person signing the instant petition was ever given a power of attorney or authorization of agent to prosecute the above-identified application. If the person signing the instant petition desires to receive future correspondence regarding this application, the appropriate power of attorney or authorization of agent must be submitted. While a courtesy copy of this decision is being mailed to the person signing the instant petition, all future correspondence will be directed to the address currently of record until such time as appropriate instructions are received to the contrary.

Telephone inquiries concerning this decision should be directed to Monica Graves at (571) 272-7253.

Sherry D. Brinkley

Sherry D. Brinkley
Petitions Examiner
Office of Petitions

cc: **JIAWEI HUANG**
JC PATENTS, INC.
4 VENTURE, SUITE 250
IRVINE, CA 92618

UNITED STATES PATENT AND TRADEMARK OFFICE

UNITED STATES DEPARTMENT OF COMMERCE
United States Patent and Trademark Office
Address: COMMISSIONER OF PATENTS AND TRADEMARKS
Washington, D.C. 20231
www.uspto.gov

APPLICATION NO.	FILING DATE	FIRST NAMED INVENTOR	ATTORNEY DOCKET NO.	CONFIRMATION NO.
09/771,516	01/17/2001	Huang Chuang-Pan		6771

7590 12/10/2002

Huang Chuang-Pan
Sec 1
NO. 52, Alley 41, Lane, An-Ho Rd.
Tainan City, 9F 3R
TAIWAN

EXAMINER
HUYNH, KIM NGOC

ART UNIT	PAPER NUMBER
2836	

DATE MAILED: 12/10/2002

Please find below and/or attached an Office communication concerning this application or proceeding.

Office Action Summary	Application No.	Applicant(s)
	09/771,516	CHUANG-PAN ET AL
	Examiner	Art Unit
	Kim Huynh	2836

-- The MAILING DATE of this communication appears on the cover sheet with the correspondence address --

Period for Reply

A SHORTENED STATUTORY PERIOD FOR REPLY IS SET TO EXPIRE 3 MONTH(S) FROM THE MAILING DATE OF THIS COMMUNICATION.

- Extensions of time may be available under the provisions of 37 CFR 1.136(a). In no event, however, may a reply be timely filed after SIX (6) MONTHS from the mailing date of this communication.
- If the period for reply specified above is less than thirty (30) days, a reply within the statutory minimum of thirty (30) days will be considered timely.
- If NO period for reply is specified above, the maximum statutory period will apply and will expire SIX (6) MONTHS from the mailing date of this communication.
- Failure to reply within the set or extended period for reply will, by statute, cause the application to become ABANDONED (35 U.S.C. § 133).
- Any reply received by the Office later than three months after the mailing date of this communication, even if timely filed, may reduce any earned patent term adjustment. See 37 CFR 1.704(b).

Status

1)☒ Responsive to communication(s) filed on 17 January 2001.

2a)☐ This action is **FINAL**. 2b)☒ This action is non-final.

3)☐ Since this application is in condition for allowance except for formal matters, prosecution as to the merits is closed in accordance with the practice under *Ex parte Quayle*, 1935 C.D. 11, 453 O.G. 213.

Disposition of Claims

4)☒ Claim(s) 1 is/are pending in the application.

4a) Of the above claim(s) _____ is/are withdrawn from consideration.

5)☐ Claim(s) _____ is/are allowed.

6)☒ Claim(s) 1 is/are rejected.

7)☐ Claim(s) _____ is/are objected to.

8)☐ Claim(s) _____ are subject to restriction and/or election requirement.

Application Papers

9)☐ The specification is objected to by the Examiner.

10)☐ The drawing(s) filed on _____ is/are: a)☐ accepted or b)☐ objected to by the Examiner.

Applicant may not request that any objection to the drawing(s) be held in abeyance. See 37 CFR 1.85(a).

11)☐ The proposed drawing correction filed on _____ is: a)☐ approved b)☐ disapproved by the Examiner.

If approved, corrected drawings are required in reply to this Office action.

12)☐ The oath or declaration is objected to by the Examiner.

Priority under 35 U.S.C. §§ 119 and 120

13)☐ Acknowledgment is made of a claim for foreign priority under 35 U.S.C. § 119(a)-(d) or (f).

a)☐ All b)☐ Some * c)☐ None of:

1.☐ Certified copies of the priority documents have been received.

2.☐ Certified copies of the priority documents have been received in Application No. _____.

3.☐ Copies of the certified copies of the priority documents have been received in this National Stage application from the International Bureau (PCT Rule 17.2(a)).

* See the attached detailed Office action for a list of the certified copies not received.

14)☐ Acknowledgment is made of a claim for domestic priority under 35 U.S.C. § 119(e) (to a provisional application).

a) ☐ The translation of the foreign language provisional application has been received.

15)☐ Acknowledgment is made of a claim for domestic priority under 35 U.S.C. §§ 120 and/or 121.

Attachment(s)

1) ☒ Notice of References Cited (PTO-892)
2) ☐ Notice of Draftsperson's Patent Drawing Review (PTO-948)
3) ☐ Information Disclosure Statement(s) (PTO-1449) Paper No(s) _____.
4) ☐ Interview Summary (PTO-413) Paper No(s). _____.
5) ☐ Notice of Informal Patent Application (PTO-152)
6) ☐ Other:

DETAILED ACTION

Claim Objections

1. The claims are objected to because they include reference characters which are not enclosed within parentheses.

Reference characters corresponding to elements recited in the detailed description of the drawings and used in conjunction with the recitation of the same element or group of elements in the claims should be enclosed within parentheses so as to avoid confusion with other numbers or characters which may appear in the claims. See MPEP § 608.01(m).

Claim Rejections - 35 USC § 112

2. The following is a quotation of the second paragraph of 35 U.S.C. 112:

> **The specification shall conclude with one or more claims particularly pointing out and distinctly claiming the subject matter which the applicant regards as his invention.**

3. Claim 1 is rejected under 35 U.S.C. 112, second paragraph, as being indefinite for failing to particularly point out and distinctly claim the subject matter which applicant regards as the invention.

Lines 13 and , "said terminal" and "said first terminal" lack antecedent basis since they are not consistent with the preceding terminals "a terminal" P1 and "another terminal" P2. It is suggested term such as "first" and "second" terminals is used throughout the claims for consistency when refers to terminal P1 and P2.

How can a terminal (P2) forms "a signal dividing voltage circuit" (lines 8-9)?

It is unclear what signals are transmitted by the other terminal (P2) to compare circuit (lines 10-11). Line 23, "the subsequent circuit" lacks antecedent basis.

Correction/clarification required.

4. The following rejections are made based on the examiner's best interpretation of the claims in light of the 35 USC 112 rejection.

Claim Rejections - 35 USC § 103

5. The following is a quotation of 35 U.S.C. 103(a) which forms the basis for all obviousness rejections set forth in this Office action:

> **(a) A patent may not be obtained though the invention is not identically disclosed or described as set forth in section 102 of this title, if the differences between the subject matter sought to be patented and the prior art are such that the subject matter as a whole would have been obvious at the time the invention was made to a person having ordinary skill in the art to which said subject matter pertains. Patentability shall not be negatived by the manner in which the invention was made.**

6. Claim 1 is rejected under 35 U.S.C. 103(a) as being obvious over Tsai (US 6,135,427) in view of Unoguchi et al. (US 4,449,188) or Kirchner et al. (US 4,146,775).

Tsai discloses (Figs. 10-13) a protective circuit for a humidifier having an DC input 413, a voltage stabilizer 414, a drive circuit 43 for driving an oscillator 434, a first terminal connected to a voltage divider circuit R1-R2, a second terminal (connecting to the water detecting sensor 10) for turning off the drive circuit when the water level is below a certain level (col. 4, ll. 51-69).

Tsai does not disclose an amplifier accepting signals from the first and second terminal. Kirchner discloses (Fig. 3) a protective circuit for a humidifier having a first terminal connected to a voltage divider circuit 22-23, a second terminal 74 connecting to the input terminals of amplifier 27 to control the drive circuit 31. Unoguchi also

discloses an amplifier having inputs J1 and J2 for comparing a humidity level 3 and a voltage from a divider circuit R2-R3 for controlling the output. Since utilizing amplifier to compare the values of two signals are well known in the art and as disclosed by Kirchner and Unoguchi as shown above; it would have been obvious to one having ordinary skill in the art to utilize a comparator circuit for controlling the drive circuit of Tsia depending the output signal of the water detector means since Tsia discloses that the water detector means could various types of detector devices.

Conclusion

7. The prior art made of record and not relied upon is considered pertinent to applicant's disclosure. Cox (US 5,014,908), Mitsui et al. (US 3,989,042) and Huang (US 4,820,453) disclose various protection circuits for shutting down the drive circuit when the water level is low in a humidifier.

8. Any inquiry concerning this communication or earlier communications from the examiner should be directed to Kim Huynh whose telephone number is (703) 308-1678.

Any inquiry of a general nature or relating to the status of this application or proceeding should be directed to the receptionist whose telephone number is (703) 308-0658.

Kim Huynh
Primary Examiner
Art Unit 2836

KH
December 3, 2002

Notice of References Cited	Application/Control No. 09/771,516	Applicant(s)/Patent Under Reexamination CHUANG-PAN ET AL.	
	Examiner Kim Huynh	Art Unit 2836	Page 1 of 1

U.S. PATENT DOCUMENTS

*		Document Number Country Code-Number-Kind Code	Date MM-YYYY	Name	Classification
	A	US-6,135,427	10-2000	Tsai, Tony Teh-Feng	261/26
	B	US-4,449,188	05-1984	Unoguchi et al.	700/276
	C	US-4,146,775	03-1979	Kirchner et al.	392/327
	D	US-4,820,453	04-1989	Huang, Chuang-Pang	261/26
	E	US-3,989,042	11-1976	Mitsui et al.	128/200.16
	F	US-5,014,908	05-1991	Cox, Karmen D.	236/44E
	G	US-			
	H	US-			
	I	US-			
	J	US-			
	K	US-			
	L	US-			
	M	US-			

FOREIGN PATENT DOCUMENTS

*		Document Number Country Code-Number-Kind Code	Date MM-YYYY	Country	Name	Classification
	N					
	O					
	P					
	Q					
	R					
	S					
	T					

NON-PATENT DOCUMENTS

*		Include as applicable: Author, Title Date, Publisher, Edition or Volume, Pertinent Pages)
	U	
	V	
	W	
	X	

*A copy of this reference is not being furnished with this Office action. (See MPEP § 707.05(a).)
Dates in MM-YYYY format are publication dates. Classifications may be US or foreign.

IFW

UNITED STATES PATENT AND TRADEMARK OFFICE

OIPE IAP2
APR 0 6 2007
PATENT & TRADEMARK OFFICE

Commissioner for Patents
United States Patent and Trademark Office
P.O. Box 1450
Alexandria, VA 22313-1450
www.uspto.gov

HUANG CHUANG-PAN
SEC 1
NO. 52, ALLEY 41, LANE, AN-HO RD.
TAINAN CITY 9F 3R TW TAIWAN

COPY MAILED

FEB 2 0 2007

OFFICE OF PETITIONS

In re Application of	:	
CHUANG-PAN, et al.	:	
Application No. 09/771,516	:	DECISION ON PETITION
Filed: January 17, 2001	:	
Attorney Docket No.	:	

This is a decision on the petition under the unintentional provisions of 37 CFR 1.137(b), filed June 22, 2006, to revive the above-identified application.

The petition is **DISMISSED**.

The application became abandoned for failure to reply in a timely manner to the non-final Office action mailed, December 10, 2002, which set a shortened statutory period for reply of three (3) months. No extensions of time under the provisions of 37 CFR 1.136(a) were obtained. Accordingly, the application became abandoned on March 11, 2003.

A grantable petition under 37 CFR 1.137(b) must be accompanied by: (1) the required reply, unless previously filed; (2) the petition fee as set forth in 37 CFR 1.17(m); (3) a statement that the entire delay in filing the required reply from the due date for the reply until the filing of a grantable petition pursuant to 37 CFR 1.137(b) was unintentional; and (4) any terminal disclaimer (and fee as set forth in 37 CFR 1.20(d)) required by 37 CFR 1.137(d). Where there is a question as to whether either the abandonment or the delay in filing a petition under 37 CFR 1.137 was unintentional, the Director may require additional information. See MPEP 711.03(c)(II)(C) and (D). The instant petition lacks item(1) the required reply. For applicants conveyance, a copy of the non-final office action previously mailed on December 10, 2002 is enclosed with this decision.

Any request for reconsideration of this decision must be submitted within TWO (2) MONTHS from the mail date of this decision. Extensions of time under 37 CFR 1.136(a) are permitted.

The reconsideration request should include a cover letter entitled "Renewed Petition under 37 CFR 1.137(b)." This is **not** a final agency action within the meaning of 5 U.S.C. § 704.

Further correspondence with respect to this matter should be addressed as follows:

By Mail: Mail Stop PETITION
Commissioner for Patents
P. O. Box 1450
Alexandria, VA 22313-1450

By hand: U. S. Patent and Trademark Office
Customer Service Window, Mail Stop Petitions
Randolph Building
401 Dulany Street
Alexandria, VA 22314

The centralized facsimile number is **(571) 273-8300.**

The person signing the instant petition requests a change of correspondence address to the address given in the instant petition. There is, however, no indication that the person signing the instant petition was ever given a power of attorney or authorization of agent to prosecute the above-identified application. If the person signing the instant petition desires to receive future correspondence regarding this application, the appropriate power of attorney or authorization of agent must be submitted. While a courtesy copy of this decision is being mailed to the person signing the instant petition, all future correspondence will be directed to the address currently of record until such time as appropriate instructions are received to the contrary.

Telephone inquiries concerning this decision should be directed to Monica Graves at (571) 272-7253.

Sherry D. Brinkley

Sherry D. Brinkley
Petitions Examiner
Office of Petitions

cc: **JIAWEI HUANG**
JC PATENTS, INC.
4 VENTURE, SUITE 250
IRVINE, CA 92618

UNITED STATES PATENT AND TRADEMARK OFFICE

UNITED STATES DEPARTMENT OF COMMERCE
United States Patent and Trademark Office
Address: COMMISSIONER OF PATENTS AND TRADEMARKS
Washington, D.C. 20231
www.uspto.gov

APPLICATION NO.	FILING DATE	FIRST NAMED INVENTOR	ATTORNEY DOCKET NO.	CONFIRMATION NO.
09/771,516	01/17/2001	Huang Chuang-Pan		6771

7590 12/10/2002

Huang Chuang-Pan
Sec 1
NO. 52, Alley 41, Lane, An-Ho Rd.
Tainan City, 9F 3R
TAIWAN

EXAMINER
HUYNH, KIM NGOC

ART UNIT	PAPER NUMBER
2836	

DATE MAILED: 12/10/2002

Please find below and/or attached an Office communication concerning this application or proceeding.

Office Action Summary	Application No.	Applicant(s)
	09/771,516	CHUANG-PAN ET AL.
	Examiner	Art Unit
	Kim Huynh	2836

-- The MAILING DATE of this communication appears on the cover sheet with the correspondence address --

Period for Reply

A SHORTENED STATUTORY PERIOD FOR REPLY IS SET TO EXPIRE 3 MONTH(S) FROM THE MAILING DATE OF THIS COMMUNICATION.

- Extensions of time may be available under the provisions of 37 CFR 1.136(a). In no event, however, may a reply be timely filed after SIX (6) MONTHS from the mailing date of this communication.
- If the period for reply specified above is less than thirty (30) days, a reply within the statutory minimum of thirty (30) days will be considered timely.
- If NO period for reply is specified above, the maximum statutory period will apply and will expire SIX (6) MONTHS from the mailing date of this communication.
- Failure to reply within the set or extended period for reply will, by statute, cause the application to become ABANDONED (35 U.S.C. § 133).
- Any reply received by the Office later than three months after the mailing date of this communication, even if timely filed, may reduce any earned patent term adjustment. See 37 CFR 1.704(b).

Status

1)☒ Responsive to communication(s) filed on 17 January 2001.

2a)☐ This action is **FINAL**. 2b)☒ This action is non-final.

3)☐ Since this application is in condition for allowance except for formal matters, prosecution as to the merits is closed in accordance with the practice under *Ex parte Quayle*, 1935 C.D. 11, 453 O.G. 213.

Disposition of Claims

4)☒ Claim(s) 1 is/are pending in the application.

4a) Of the above claim(s) _____ is/are withdrawn from consideration.

5)☐ Claim(s) _____ is/are allowed.

6)☒ Claim(s) 1 is/are rejected.

7)☐ Claim(s) _____ is/are objected to.

8)☐ Claim(s) _____ are subject to restriction and/or election requirement.

Application Papers

9)☐ The specification is objected to by the Examiner.

10)☐ The drawing(s) filed on _____ is/are: a)☐ accepted or b)☐ objected to by the Examiner.

Applicant may not request that any objection to the drawing(s) be held in abeyance. See 37 CFR 1.85(a).

11)☐ The proposed drawing correction filed on _____ is: a)☐ approved b)☐ disapproved by the Examiner.

If approved, corrected drawings are required in reply to this Office action.

12)☐ The oath or declaration is objected to by the Examiner.

Priority under 35 U.S.C. §§ 119 and 120

13)☐ Acknowledgment is made of a claim for foreign priority under 35 U.S.C. § 119(a)-(d) or (f).

a)☐ All b)☐ Some * c)☐ None of:

1.☐ Certified copies of the priority documents have been received.

2.☐ Certified copies of the priority documents have been received in Application No. _____.

3.☐ Copies of the certified copies of the priority documents have been received in this National Stage application from the International Bureau (PCT Rule 17.2(a)).

* See the attached detailed Office action for a list of the certified copies not received.

14)☐ Acknowledgment is made of a claim for domestic priority under 35 U.S.C. § 119(e) (to a provisional application).

a) ☐ The translation of the foreign language provisional application has been received.

15)☐ Acknowledgment is made of a claim for domestic priority under 35 U.S.C. §§ 120 and/or 121.

Attachment(s)

1) ☒ Notice of References Cited (PTO-892)
2) ☐ Notice of Draftsperson's Patent Drawing Review (PTO-948)
3) ☐ Information Disclosure Statement(s) (PTO-1449) Paper No(s) _____.
4) ☐ Interview Summary (PTO-413) Paper No(s). _____.
5) ☐ Notice of Informal Patent Application (PTO-152)
6) ☐ Other:

DETAILED ACTION

Claim Objections

1. The claims are objected to because they include reference characters which are not enclosed within parentheses.

Reference characters corresponding to elements recited in the detailed description of the drawings and used in conjunction with the recitation of the same element or group of elements in the claims should be enclosed within parentheses so as to avoid confusion with other numbers or characters which may appear in the claims. See MPEP § 608.01(m).

Claim Rejections - 35 USC § 112

2. The following is a quotation of the second paragraph of 35 U.S.C. 112:

> **The specification shall conclude with one or more claims particularly pointing out and distinctly claiming the subject matter which the applicant regards as his invention.**

3. Claim 1 is rejected under 35 U.S.C. 112, second paragraph, as being indefinite for failing to particularly point out and distinctly claim the subject matter which applicant regards as the invention.

Lines 13 and , "said terminal" and "said first terminal" lack antecedent basis since they are not consistent with the preceding terminals "a terminal" P1 and "another terminal" P2. It is suggested term such as "first" and "second" terminals is used throughout the claims for consistency when refers to terminal P1 and P2.

How can a terminal (P2) forms "a signal dividing voltage circuit" (lines 8-9)?

It is unclear what signals are transmitted by the other terminal (P2) to compare circuit (lines 10-11). Line 23, "the subsequent circuit" lacks antecedent basis.

Correction/clarification required.

4. The following rejections are made based on the examiner's best interpretation of the claims in light of the 35 USC 112 rejection.

Claim Rejections - 35 USC § 103

5. The following is a quotation of 35 U.S.C. 103(a) which forms the basis for all obviousness rejections set forth in this Office action:

> **(a) A patent may not be obtained though the invention is not identically disclosed or described as set forth in section 102 of this title, if the differences between the subject matter sought to be patented and the prior art are such that the subject matter as a whole would have been obvious at the time the invention was made to a person having ordinary skill in the art to which said subject matter pertains. Patentability shall not be negatived by the manner in which the invention was made.**

6. Claim 1 is rejected under 35 U.S.C. 103(a) as being obvious over Tsai (US 6,135,427) in view of Unoguchi et al. (US 4,449,188) or Kirchner et al. (US 4,146,775).

Tsai discloses (Figs. 10-13) a protective circuit for a humidifier having an DC input 413, a voltage stabilizer 414, a drive circuit 43 for driving an oscillator 434, a first terminal connected to a voltage divider circuit R1-R2, a second terminal (connecting to the water detecting sensor 10) for turning off the drive circuit when the water level is below a certain level (col. 4, ll. 51-69).

Tsai does not disclose an amplifier accepting signals from the first and second terminal. Kirchner discloses (Fig. 3) a protective circuit for a humidifier having a first terminal connected to a voltage divider circuit 22-23, a second terminal 74 connecting to the input terminals of amplifier 27 to control the drive circuit 31. Unoguchi also

discloses an amplifier having inputs J1 and J2 for comparing a humidity level 3 and a voltage from a divider circuit R2-R3 for controlling the output. Since utilizing amplifier to compare the values of two signals are well known in the art and as disclosed by Kirchner and Unoguchi as shown above; it would have been obvious to one having ordinary skill in the art to utilize a comparator circuit for controlling the drive circuit of Tsia depending the output signal of the water detector means since Tsia discloses that the water detector means could various types of detector devices.

Conclusion

7. The prior art made of record and not relied upon is considered pertinent to applicant's disclosure. Cox (US 5,014,908), Mitsui et al. (US 3,989,042) and Huang (US 4,820,453) disclose various protection circuits for shutting down the drive circuit when the water level is low in a humidifier.

8. Any inquiry concerning this communication or earlier communications from the examiner should be directed to Kim Huynh whose telephone number is (703) 308-1678.

Any inquiry of a general nature or relating to the status of this application or proceeding should be directed to the receptionist whose telephone number is (703) 308-0658.

Kim Huynh
Primary Examiner
Art Unit 2836

KH
December 3, 2002

Notice of References Cited	Application/Control No. 09/771,516	Applicant(s)/Patent Under Reexamination CHUANG-PAN ET AL	
	Examiner Kim Huynh	Art Unit 2836	Page 1 of 1

U.S. PATENT DOCUMENTS

*		Document Number Country Code-Number-Kind Code	Date MM-YYYY	Name	Classification
	A	US-6,135,427	10-2000	Tsai, Tony Teh-Feng	261/26
	B	US-4,449,188	05-1984	Unoguchi et al.	700/276
	C	US-4,146,775	03-1979	Kirchner et al.	392/327
	D	US-4,820,453	04-1989	Huang, Chuang-Pang	261/26
	E	US-3,989,042	11-1976	Mitsui et al.	128/200.16
	F	US-5,014,908	05-1991	Cox, Karmen D.	236/44E
	G	US-			
	H	US-			
	I	US-			
	J	US-			
	K	US-			
	L	US-			
	M	US-			

FOREIGN PATENT DOCUMENTS

*		Document Number Country Code-Number-Kind Code	Date MM-YYYY	Country	Name	Classification
	N					
	O					
	P					
	Q					
	R					
	S					
	T					

NON-PATENT DOCUMENTS

*		Include as applicable: Author, Title Date, Publisher, Edition or Volume, Pertinent Pages)
	U	
	V	
	W	
	X	

*A copy of this reference is not being furnished with this Office action. (See MPEP § 707.05(a).)
Dates in MM-YYYY format are publication dates. Classifications may be US or foreign.

Organization _____ Bldg./Room _____

UNITED STATES PATENT AND TRADEMARK OFFICE

P.O. Box 1450

Alexandria, VA. 22313-1450

If Undeliverable Return In Ten Days

Official Business

Penalty For Private Use, $300

REASON CHECKED

AN EQUAL OPPORTUNITY EMPLOYER

UNITED STATES POSTAGE

U.S. OFFICIAL MAIL

PENALTY FOR PRIVATE USE $300

PITNEY BOWES

$ 00.63⁰

02 1A

0004204479 FEB 20 2007

MAILED FROM ZIP CODE 22314

RETURN TO SENDER

Unknown

Deceased

Refused

Unclaimed

Terminated

No Such P.O. Box Number

No Such Street Number

Insufficient Address

Left No Address

46

22313X1450

00188/0001

UNITED STATES PATENT AND TRADEMARK OFFICE

Commissioner for Patents
United States Patent and Trademark Office
P.O. Box 1450
Alexandria, VA 22313-1450
www.uspto.gov

J C PATENTS, INC.
4 VENTURE, SUITE 250
IRVINE, CA 92618

COPY MAILED

MAY 2 1 2008

OFFICE OF PETITIONS

In re Application of :
CHUANG-PAN, et al. :
Application No. 09/771,516 : DECISION ON PETITION UNDER
Filed: January 17, 2001 : 37 CFR 1.137(b)
Attorney Docket No. :

This is a decision on the renewed petition under the unintentional provisions of 37 CFR 1.137(b), filed April 19, 2007, to revive the above-identified application.

The petition is **DISMISSED.**

Any request for reconsideration of this decision must be submitted within TWO (2) MONTHS from the mail date of this decision. Extensions of time under 37 CFR 1.136(a) are permitted. The reconsideration request should include a cover letter entitled "Renewed Petition under 37 CFR 1.137(b)." This is **not** a final agency action within the meaning of 5 U.S.C. § 704.

The application became abandoned for failure to reply in a timely manner to the Restriction Requirement, mailed December 10, 2002, which set a shortened statutory period for reply of one (1) month or thirty (30) days (whichever is later). No extensions of time under the provisions of 37 CFR 1.136(a) were obtained. Accordingly, the application became abandoned on March 11, 2003.

A grantable petition under 37 CFR 1.137(b) must be accompanied by: (1) the required reply, unless previously filed; (2) the petition fee as set forth in 37 CFR 1.17(m); (3) a statement that the entire delay in filing the required reply from the due date for the reply until the filing of a grantable petition pursuant to 37 CFR 1.137(b) was unintentional; and (4) any terminal disclaimer (and fee as set forth in 37 CFR 1.20(d)) required by 37 CFR 1.137(d). Where there is a question as to whether either the abandonment or the delay in filing a petition under 37 CFR 1.137 was unintentional, the Director may require additional information. *See* MPEP 711.03(c)(II)(C) and (D).

There are three periods to be considered during the evaluation of a petition under 37 CFR 1.137(b):

(1) the delay in reply that originally resulted in the abandonment;

(2) the delay in filing an initial petition pursuant to 37 CFR 1.137(b) to revive the application; and

(3) the delay in filing a grantable petition pursuant to 37 CFR 1.137(b) to revive the application.

Currently, the delay has not been shown to the satisfaction of the Director to be unintentional for periods (1) and (2).

As to Period (1):

The patent statute at 35 U.S.C. § 41(a)(7) authorizes the Director to revive an "unintentionally abandoned application." The legislative history of Public Law 97-247 reveals that the purpose of 35 U.S.C. § 41(a)(7) is to permit the Office to have more discretion than in 35 U.S.C. §§ 133 or 151 to revive abandoned applications in appropriate circumstances, but places a limit on this discretion, stating that "[u]nder this section a petition accompanied by either a fee of $500 or a fee of $50 **would not be granted where the abandonment** or the failure to pay the fee for issuing the patent **was intentional** as opposed to being unintentional or unavoidable." [emphasis added]. See H.R. Rep. No. 542, 97th Cong., 2d Sess. 6-7 (1982), *reprinted in* 1982 U.S.C.C.A.N. 770-71. The revival of an intentionally abandoned application is antithetical to the meaning and intent of the statute and regulation.

35 U.S.C. § 41(a)(7) authorizes the Director to accept a petition "for the revival of an unintentionally abandoned application for a patent." As amended December 1, 1997, 37 CFR 1.137(b)(3) provides that a petition under 37 CFR 1.137(b) must be accompanied by a statement that the delay was unintentional, but provides that "[t]he Commissioner may require additional information where there is a question whether the delay was unintentional." Where, as here, there is a question whether the initial delay was unintentional, the petitioner must meet the burden of establishing that the delay was unintentional within the meaning of 35 U.S.C. § 41(a)(7) and 37 CFR 1.137(b). *See* In re Application of G, 11 USPQ2d 1378, 1380 (Comm'r Pats. 1989); 37 CFR 1.137(b). Here, in view of the inordinate delay (almost three (3) years) in resuming prosecution, there is a question whether the entire delay was unintentional. Petitioner should note that the issue is not whether some of the delay was unintentional by any party; rather, the issue is whether the entire delay has been shown to the satisfaction of the Director to be unintentional.

The question under 37 CFR 1.137(b) for period (1) is whether the delay on the part of the party having the right or authority to reply to avoid abandonment (or not reply) was unintentional. Accordingly, any renewed petition must clearly identify the party having the right to reply to avoid abandonment on March 11, 2003. That party, in turn must explain what effort(s) was made to further reply to the outstanding Office action and, further, why no reply was filed. If no effort was made to further reply, then that party must explain why the delay in this application does not result from a deliberate course of action (or inaction). Statements are required from any and all

responsible person(s) having firsthand knowledge of the circumstances surrounding the lack of a reply to the outstanding Office action. As the courts have made clear, it is pointless for the USPTO to revive a long abandoned application without an adequate showing that the delay did not result from a deliberate course of action. *See* Lawman Armor v. Simon, 2005 U.S. Dist. LEXIS 10843, 74 USPQ2d 1633 (DC EMich 2005); Field Hybrids, LLC v. Toyota Motor Corp., 2005 U.S. Dist. LEXIS 1159 (D. Minn Jan. 27, 2005); Lumenyte Int'l Corp. v. Cable Lite Corp., Nos. 96-1011, 96-1077, 1996 U.S. App. LEXIS 16400, 1996 WL 383927 (Fed. Cir. July 9, 1996) (unpublished) (patents held unenforceable due to a finding of inequitable conduct in submitting an inappropriate statement that the abandonment was unintentional).

As to Period (2):

Likewise, where the applicant deliberately chooses not to seek or persist in seeking the revival of an abandoned application, or where the applicant deliberately chooses to delay seeking the revival of an abandoned application, the resulting delay in seeking revival of the abandoned application cannot be considered as "unintentional" within the meaning of 37 CFR 1.137(b). *See* MPEP 711.03(c).

The language of both 35 U.S.C. § 41(a)(7) and 37 CFR 1.137(b) are clear and unambiguous, and, furthermore, without qualification. That is, the delay in filing the reply during prosecution, as well as in filing the petition seeking revival, must have been, without qualification, "unintentional" for the reply to now be accepted on petition. The Office requires that the entire delay be at least unintentional as a prerequisite to revival of an abandoned application to prevent abuse and injury to the public. *See* H.R. Rep. No. 542, 97th Cong., 2d Sess. 7 (1982), reprinted in 1982 U.S.C.C.A.N. 771 ("[i]n order to prevent abuse and injury to the public the Commissioner . . . could require applicants to act promptly after becoming aware of the abandonment"). The December 1997 change to 37 CFR 1.137 did not create any new right to overcome an intentional delay in seeking revival, or in renewing an attempt at seeking revival, of an abandoned application. *See* Changes to Patent Practice and Procedure; Final Rule Notice, 62 Fed. Reg. 53131, 53160 (October 10, 1997), 1203 Off. Gaz. Pat. Office 63, 87 (October 21, 1997), which clearly stated that any protracted delay (here, over three (3) years) could trigger, as here, a request for additional information. As the courts have since made clear, a protracted delay in seeking revival, as here, requires a petitioner's detailed explanation seeking to excuse the delay as opposed to USPTO acceptance of a general allegation of unintentional delay. *See* Lawman Armor v. Simon, 2005 U.S. Dist. LEXIS 10843, 74 USPQ2d 1633, at 1637-8 (DC EMich 2005); Field Hybrids, LLC v. Toyota Motor Corp., 2005 U.S. Dist. LEXIS 1159 (D. Minn Jan. 27, 2005) at *21-*23. Statements are required from any and all responsible person(s) having firsthand knowledge of the circumstances surrounding the protracted delay, after the abandonment date, in seeking revival.

As noted in MPEP 711.03(c)(II), subsection D, in instances in which such petition was not filed within 1 year of the date of abandonment of the application, applicants should include:

(A) the date that the applicant first became aware of the abandonment of the application; and
(B) a showing as to how the delay in discovering the abandoned status of the application occurred despite the exercise of due care or diligence on the part of the applicant.

In either instance, applicant's failure to carry the burden of proof to establish that the "entire" delay was "unavoidable" or "unintentional" may lead to the denial of a petition under 37 CFR 1.137(b), regardless of the circumstances that originally resulted in the abandonment of the application. *See also* New York University v. Autodesk, 2007 U.S. DIST LEXIS, U.S.District LEXIS 50832, *10 -*12 (S.D.N.Y. 2007)(protracted delay in seeking revival undercuts assertion of unintentional delay).

Any renewed petition may be addressed as follows:

By Mail: Mail Stop PETITION
Commissioner for Patents
P. O. Box 1450
Alexandria, VA 22313-1450

By hand: U. S. Patent and Trademark Office
Customer Service Window, Mail Stop Petitions
Randolph Building
401 Dulany Street
Alexandria, VA 22314

The centralized facsimile number is **(571) 273-8300.**

Correspondence regarding this decision may also be filed through the electronic filing system of the USPTO.

Telephone inquiries concerning this decision should be directed to Monica A. Graves at (571) 272-7253.

Brian W. Brown
Petitions Examiner
Office of Petitions

UNITED STATES PATENT AND TRADEMARK OFFICE

Commissioner for Patents
United States Patent and Trademark Office
P.O. Box 1450
Alexandria, VA 22313-1450
www.uspto.gov

COPY MAILED

OCT 23 2009

OFFICE OF PETITIONS

J C PATENTS
4 VENTURE, SUITE 250
IRVINE, CA 92618

In re Application of	:	
Huang CHAUNG-PAN, *et al.*	:	
Application No. 09/771,516	:	DECISION ON PETITION
Filed: January 17, 2001	:	UNDER 37 CFR 1.137(b)
Attorney Docket No.	:	

This is a decision on the renewed petition under the unintentional provisions of 37 CFR 1.137(b), filed July 16, 2008, to revive the above-identified application.

The petition is **GRANTED**.

The application became abandoned for failure to reply in a timely manner to the non-final Office action mailed, December 10, 2002 which set a shortened statutory period for reply of three (3) months. No extensions of time under the provisions of 37 CFR 1.136(a) were obtained. Accordingly, the application became abandoned on March 11, 2003.

It is not apparent whether the person signing the statement of unintentional delay was in a position to have firsthand or direct knowledge of the facts and circumstances of the delay at issue. Nevertheless, such statement is being treated as having been made as the result of a reasonable inquiry into the facts and circumstances of such delay. See 37 CFR 10.18(b) and Changes to Patent Practice and Procedure; Final Rule Notice, 62 Fed. Reg. 53131, 53178 (October 10, 1997), 1203 Off. Gaz. Pat. Office 63, 103 (October 21, 1997). In the event that such an inquiry has not been made, petitioner must make such an inquiry. If such inquiry results in the discovery that it is not correct that the entire delay in filing the required reply from the due date for the reply until the filing of a grantable petition pursuant to 37 CFR 1.137(b) was unintentional, petitioner must notify the Office.

The petition satisfies the requirements of 37 CFR 1.137(b) in that petitioner has supplied (1) the reply in the form of an amendment, (2) the petition fee of $750; and (3) an adequate statement of unintentional delay.

Telephone inquiries concerning this decision should be directed to Monica Graves at (571)272-7253.

This application is being referred to Technology Center Art Unit 2182 for appropriate action by the Examiner in the normal course of business on the reply received.

Brian W. Brown
Petitions Examiner
Office of Petitions

UNITED STATES PATENT AND TRADEMARK OFFICE

COMMISSIONER FOR PATENTS
UNITED STATES PATENT AND TRADEMARK OFFICE
P.O. BOX 1450
ALEXANDRIA, VA 22313-1450
www.uspto.gov

JJGJR.: 09-04

Paper No: __

DAVID CHAUM
14652 SUTTON ST.
SHERMAN OAKS CA 91403

COPY MAILED

SEP 3 0 2004

OFFICE OF PETITIONS

In re Application of
Chaum :
Application No. 09/771,537 : DECISION ON PETITION
Filing Date: 29 January, 2001
Attorney Docket No. (None) :

This is a decision on the petition filed on 12 May, 2001, and considered under 37 C.F.R. §1.53, to obtain a filing date of 29 January, 2001, for Fig. 10 as described in the specification.

The Office regrets the delay in addressing this matter.

The petition is **DISMISSED**.

NOTE: Petitioner is respectfully requested to place the Application Serial Number, Filing Date, Inventor Name, Examiner Name and Art Unit atop each paper filed in this matter.

BACKGROUND

This nonprovisional application was deposited on 29 January, 2001

On 16 April, 2001, the Office mailed a "Notice of Omitted Items in a Nonprovisional Application," (the 16 April Notice) and indicated that, while a filing date had been granted, it appeared that Fig. 10 as described in the specification was omitted from the application.

The 16 April Notice informed Petitioner of three alternative responses to the Notice: (a) to contend that the materials had been submitted, providing evidence thereof and a copy of the materials; (b) to submit the omitted materials and accept the date of submission as the date of the application; or (c) to ignore the 16 April Notice and accept the application as filed.

Petitioner actually elected to do none of the above, in that while he has submitted the petition and fee he has submitted no evidence of deposit of the Fig. 10 on filing.

Petitioner:

- filed the instant petition on 12 May, 2001; and
- alleged that the instant application incorporated by reference the parent such that the presence of the drawing in the parent with the incorporation by reference results in there being no new matter if Fig. 10 as described in the specification is included in the instant application.

Petitioner may wish simply to file an amendment including the omitted Fig. 10 and seek entry by the Examiner should the Examiner conclude that because of the prior incorporation by reference the inclusion of Fig. 10 as described in the specification presents no new matter.

Alternatively, when making such an of incorporation by reference, it is proper to provide a copy of the parent application as filed. Should Petitioner wish to proceed accordingly with the instant matter, Petitioner should submit a complete copy of the parent application as filed, a copy of the receipt card and a renewed petition. Petitioner should file these materials within two months of the date of this decision.

Alternatively, Petitioner had indicated in the petition that he intended to submit a copy of the receipt card from the application. This he has failed to do. (The copies of receipt cards were for applications other than the instant application.) Petitioner may submit a copy of the receipt card with the renewed petition.

Further correspondence with respect to this matter should be addressed as follows:

By mail: (Effective 1 May, 2003)[1]
Commissioner for Patents
P.O. Box 1450
Alexandria, VA 22313-1450

[1] To determine the appropriate addresses for other subject-specific correspondence, refer to the USPTO Web site at www.uspto.gov.

By FAX: IFW Formal Filings
(703) 872-9306
(Effective 28 September, 2004: (571-273-0025)
ATTN.: Office of Petitions

By hand: Mail Stop: Petition
Customer Service Window
Lobby/Room 1B03
Crystal Plaza Two
220 20th Street S.
Arlington, VA 22202

This file (Image File Wrapper (IFW) is released to OIPE for further processing consistent with this decision before being forwarded for examination in due course.

Telephone inquiries concerning this decision may be directed to the undersigned at (571) 272-3214.

John J. Gillon, Jr.
Senior Attorney
Office of Petitions

UNITED STATES PATENT AND TRADEMARK OFFICE

Commissioner for Patents
United States Patent and Trademark Office
P.O. Box 1450
Alexandria, VA 22313-1450
www.uspto.gov

MAIL

MAR 19 2007

DIRECTOR'S OFFICE
TECHNOLOGY CENTER 2600

OBLON, SPIVAK, MCCLELLAND, MAIER & NEUSTADT, P.C.
1940 DUKE STREET
ALEXANDRIA VA 22314

In re Application of:
NOMURA, YASUO, et al.
Application Serial No.: 09/771,557
Filed: January 30, 2001
For: INFORMATION PROCESSING APPARATUS AND METHOD AS WELL AS PROGRAM STORAGE MEDIUM

DECISION ON PETITION

This is a decision on the petition to withdraw finality of office action filed December 19, 2006, pursuant to 37 CFR § 1.181.

Petitioner contends that the Office action mailed October 19, 2006 should not have been made final because applicants had no previous means by which to examine the Hashizume parent application absent the supply of this application from the USPTO.

A review of the file indicates a non-final rejection was made on April 6, 2006. In the office action, claims 1,2,4-6 were lined through and replaced with claims 1-11 and the rejection under 102(a) was lined through and replaced with 103(a), thus making the statement claims 1-11 are rejected under 35 USC 103(a) as being unpatentable by Hashizume et al in view of Seo. The applicant responded by filing an amendment/remarks on August 3, 2006. None of the claims have been amended. In the remarks, applicants made the conclusion, that since Hashizume is a continuation in part of an earlier filed application, there are aspects of the Hashizume disclosure, which are not entitled to the September 10, 1998 priority date. Since applicants were unable to obtain this information on their own, they are not in a position to address the propriety of the rejection as it relates to the appropriate priority date of the Hashizume reference and therefore a prima facie case of obviousness has not been presented. The examiner responded with a final rejection on October 19, 2006. In the final rejection, the rejection statement made was "Claims 1, 2, 4-6 are rejected under 102(a) as being unpatentable by Hashizume et al in view of Seo". In the remarks, the examiner states, "Please find enclosed the application 09/150,235 that establishes the priority of Hashizume et al (US 2003/0142955) reference to September 10, 1998. The rejection is maintained."

In reviewing the prosecution history, it is arguable that the examiner did in fact enter a new ground of rejection in the final rejection that wasn't necessitated by amendment. Also, in the final rejection, the examiner, after being queried by the applicant where there is support for the rejection in the parent application 09/150,235, failed to shift the burden back to the applicant by providing proof that the elements/portions that were being relied upon for support in the Hashizume CIP were present in its parent. The examiner merely restated that the CIP in its entirety had priority back to the parent without specificity. Consequently, the finality of the office action of October 19, 2006 is withdrawn.

The petition is **GRANTED**.

The file is being forwarded to the Technology Center's technical support staff for entry of the response filed December 19, 2006 as a response after non-final rejection. From there, the file will be forwarded to the Examiner for preparation of a new action in due course.

Wanda L Walker

Wanda L. Walker, Director
Technology Center 2600
Communications

UNITED STATES PATENT AND TRADEMARK OFFICE

COMMISSIONER FOR PATENT
UNITED STATES PATENT AND TRADEMARK OFFIC
WASHINGTON, D.C. 2023
www.uspto.go

JJGJr: 01-03

Paper 12

MELVIN BLECHER, PH.D. J.D.
ATTORNEY AT LAW
4329 VAN NESS STREET, N.W.
WASHINGTON DC 20016-5625

COPY MAILED

JAN 2 4 2003

OFFICE OF PETITIONS

In re Application of Theoharides Application No. 09/771,669 Filed: 30 January, 2001 Attorney Docket No. 51275/107	: : : : :	DECISION ON PETITION

This is the decision on the renewed petition filed 7 January, 2003, to revive the above-identified application under 37 C.F.R. §1.137(a).[1]

The petition under 37 C.F.R. §1.137(a) is **GRANTED**.

BACKGROUND

The record indicates that:

- the application became abandoned for failure to reply timely and properly to non-final Office action mailed on 27 March, 2002, and due (absent extension of time) on or before 27 June, 2002;

- in a statement incorporated into and documentation accompanying the original petition filed 18 November, 2002, Petitioner alleged that the reply was timely filed, but apparently misplaced in the Office, however, Petitioner failed to supply a copy of said reply

[1] A Petition filed under the provisions of 37 C.F.R. §1.137(a) must be accompanied by:
(1) The required reply, unless previously filed. In a nonprovisional application abandoned for failure to prosecute, the required reply may be met by the filing of a continuing application. In an application for patent, abandoned or lapsed for failure to pay the issue fee or any portion thereof, the required reply must be the payment of the issue fee or any outstanding balance thereof;
(2) the petition fee required by 37 C.F.R. §1.17(l);
(3) A showing to the satisfaction of the Commissioner that the entire delay in filing the required reply from the reply due date until the filing of a grantable petition pursuant to the is paragraph was unavoidable; and
(4) Any terminal disclaimer (and fee set forth in 37 C.F.R. §1.20(d)) required pursuant to 37 C.F.R. §1.137(c).

(notwithstanding the statement in the petition that said reply accompanied the petition) or the receipt card Petitioner alleged was date-stamped by the Office;

- therefore the 18 November, 2002, petition was dismissed on 24 December, 2002;
- Petitioner filed with the instant renewed petition a copy of the reply alleged to have been filed on 15 May, 2002, following the 27 March, 2002, non-final Office action.

CONCLUSION

Therefore , the petition to revive under 37 C.F.R. §1.137(a) hereby is **granted**.

This application is being forwarded to Technology Center 1600 for further processing.

Telephone inquiries regarding this decision may be directed to the undersigned at (703) 305-9199.

John J. Gillon, Jr.
Senior Attorney
Office of Petitions

UNITED STATES PATENT AND TRADEMARK OFFICE

COMMISSIONER FOR PATENT
UNITED STATES PATENT AND TRADEMARK OFFIC
WASHINGTON, D.C. 20231
www.uspto.go

JJGJr 12-02

Paper 9

MELVIN BLECHER, PH.D. J.D.
Attorney at Law
4329 VAN NESS STREET, N.W.
WASHINGTON DC 20016-5625

COPY MAILED

DEC 2 4 2002

OFFICE OF PETITIONS

In re Application of
Theoharides :
Application No. 09/771,669 : DECISION ON PETITION
Filed: 30 January, 2001 :
Attorney Docket No. 51275/107 :

This is the decision on the petition filed 18 November, 2002, to revive the above-identified application under 37 C.F.R. §1.137(a).[1]

The petition under 37 C.F.R. §1.137(a) is **DISMISSED**.

NOTES:

(1) Any petition (and fee) for reconsideration of this decision under 37 C.F.R. §1.137(a) (as to unavoidable delay) or an alternative request for relief under 37 C.F.R. §1.137(b)[2] (as to unintentional delay) must be submitted within two (2) months from the mail date of this decision. Extensions of time under 37 C.F.R. §1.136(a) are permitted.

The reconsideration request should include a cover letter entitled "Renewed Petition under 37 C.F.R. §1.137(a)"; and/or "Petition under 37 C.F.R. §1.137(b)";

---

[1] A Petition filed under the provisions of 37 C.F.R. §1.137(a) must be accompanied by:
(1) The required reply, unless previously filed. In a nonprovisional application abandoned for failure to prosecute, the required reply may be met by the filing of a continuing application. In an application for patent, abandoned or lapsed for failure to pay the issue fee or any portion thereof, the required reply must be the payment of the issue fee or any outstanding balance thereof;
(2) the petition fee required by 37 C.F.R. §1.17(l);
(3) A showing to the satisfaction of the Commissioner that the entire delay in filing the required reply from the reply due date until the filing of a grantable petition pursuant to the is paragraph was unavoidable; and
(4) Any terminal disclaimer (and fee set forth in 37 C.F.R. §1.20(d)) required pursuant to 37 C.F.R. §1.137(c).

[2] Effective December 1, 1997, the provisions of 37 C.F.R. §1.137(b) now provide that where the delay in reply was unintentional, a petition may be filed to revive an abandoned application or a lapsed patent pursuant to 37 C.F.R. §1.137(b). a grantable petition filed under the provisions of 37 C.F.R. §1.137(b) must be accompanied by:
(1) the required reply, unless previously filed. In a nonprovisional application abandoned for failure to prosecute, the required reply may be met by the filing of a continuing application. In an application or patent, abandoned or lapsed for failure to pay the issue fee or any portion thereof, the required reply must be the payment of the issue fee or any outstanding balance thereof.
(2) the petition fee as set forth in 37 C.F.R. §1.17(m);
(3) a statement that the entire delay in filing the required reply from the due date for the reply until the filing of a grantable petition pursuant to 37 C.F.R. §1.137(b) was unintentional. The Commissioner may require additional information where there is a question whether the delay was unintentional; and
(4) any terminal disclaimer (and fee set forth in 37 C.F.R. §1.20(d)) required pursuant to 37 C.F.R. §1.137(c). (Emphasis supplied.)

(2) Thereafter, there will be no further reconsideration of this matter.

BACKGROUND

The record indicates that:

- the application became abandoned for failure to reply timely and properly to non-final Office action mailed on 27 March,, 2002, and due (absent extension of time) on or before 27 June, 2002;

- through his statement and supporting documentation,[3] Petitioner alleges that the reply was timely filed, but apparently misplaced in the Office, however, Petitioner fails to supply a copy of said reply (notwithstanding the statement in the petition that said reply accompanied the petition.

STATUTES, REGULATIONS AND ANALYSIS

Congress has authorized the Commissioner to "revive an application if the delay is shown to the satisfaction of the Commissioner to have been "unavoidable." 35 U.S.C. §133 (1994).[4]

The regulations at 37 C.F.R. §1.137(a) and (b) set forth the requirements for a petitioner to revive a previously unavoidably or unintentionally, respectively, abandoned application under this congressional grant of authority.

The language of 35 U.S.C. §133 and 37 C.F.R. §1.137(a) is clear, unambiguous, and without qualification: the delay in tendering the reply to the outstanding Office action, as well as filing the first petition seeking revival, must have been unavoidable for the reply now to be accepted on petition.[5]

---

[3] In a telephone conversation with the Office on Monday, 16 December, 2002, Petitioner agreed to supply via FAX ((703) 308-6916) additional documentation to the Office. As of this writing, this material has not been received.

[4] 35 U.S.C. §133 provides:
35 U.S.C. §133 Time for prosecuting application.
Upon failure of the applicant to prosecute the application within six months after any action therein, of which notice has been given or mailed to the applicant, or within such shorter time, not less than thirty days, as fixed by the Commissioner in such action, the application shall be regarded as abandoned by the parties thereto, unless it be shown to the satisfaction of the Commissioner that such delay was unavoidable.

[5] Therefore, by example, an unavoidable delay in the payment of the Filing Fee might occur if a reply is shipped by the US Postal Service, but due to catastrophic accident, the delivery is not made.

Delays in responding properly raise the question whether delays are unavoidable.[6] Where there is a question whether the delay was unavoidable, Petitioners must meet the burden of establishing that the delay was unavoidable within the meaning of 35 U.S.C. §133 and 37 C.F.R. §1.137(a).[7] And the Petitioner must be diligent in attending to the matter.[8] Failure to do so does not constitute the care required under Pratt, and so cannot satisfy the test for diligence and due care.

(By contrast, unintentional delays are those that do not satisfy the very strict statutory and regulatory requirements of unavoidable delay, and also, by definition, are not intentional.[9]))

Allegations as to the Petition
Alleging Unavoidable Delay

A delay is not "unavoidable" when an applicant apparently simply permits the maximum extendable statutory period for reply to expire.[10] In determining if a delay was unavoidable, decisions on reviving abandoned applications have adopted the standard of the reasonably prudent person acting in their most important business matters.[11] In addition, decisions on revival are made on a "case-by-case basis, taking all the facts and circumstances into account."[12]

Petitioner has failed to support the allegation and has failed to provide the requisite reply.

Accordingly, in view of the failure of the Petitioner to satisfy the "showing" and "reply" requirements herein, the petition to revive as to unavoidable delay under 37 C.F.R. §1.137(a) must be and hereby is **dismissed**.

---

[6] See: *Changes to Patent Practice and Procedure; Final Rule Notice*, 62 *Fed. Reg.* at 53158-59 (October 10, 1997), 1203 *Off. Gaz. Pat. Office* at 86-87 (October 21, 1997).

[7] See: In re Application of G, 11 USPQ2d 1378, 1380 (Comm'r Pats. 1989).

[8] See: Diligence in Filing Petitions to Revive and Petitions to Withdraw the Holding of Abandonment, 1124 Off. Gaz. Pat. Office 33 (March 19, 1991). It was and is Petitioner's burden to exercise diligence in seeking either to have the holding of abandonment withdrawn or the application revived. See 1124 Off. Gaz. Pat. Office supra.

[9] Therefore, by example, an unintentional delay in the reply might occur if the reply and transmittal form are to be prepared for shipment by the US Postal Service, but other pressing matters distract one's attention and the mail is not timely deposited for shipment.

[10] See MPEP 711.03(c)(III)(C)(2).

[11] Ex parte Pratt, 1887 Dec. Comm'r Pat. 31, 32-33 (Comm'r Pat. 1887) (the term "unavoidable" "is applicable to ordinary human affairs, and requires no more or greater care or diligence than is generally used and observed by prudent and careful men in relation to their most important business"); In re Mattullath, 38 App. D.C. 497, 514-15 (D.C. Cir. 1912); Ex parte Henrich, 1913 Dec. Comm'r Pat. 139, 141 (Comm'r Pat. 1913).

[12] Smith v. Mossinghoff, 671 F.2d 533, 538, 213 USPQ 977, 982 (D.C. Cir. 1982).

ALTERNATIVE VENUE

If Petitioner is unable to make a showing of unavoidable delay surpassing that tendered heretofore, Petitioner's only alternative to irretrievable abandonment is to file a petition and fee as set forth at NOTE 1, above at page 2, under 37 C.F.R. §1.137(b), and state therein that "the entire delay in filing the required reply from the due date for the reply until the filing of a grantable petition pursuant to 37 C.F.R. §1.137(b) was unintentional," and submit therewith the requisite "reply."

Thus, Petitioner may wish to supplement his petition to plead alternatively under 37 C.F.R. §1.137(b) wherein the "showing " burden is much less onerous.

Further correspondence with respect to this matter should be addressed as follows:

By mail: Commissioner of Patents and Trademarks
Box DAC
Washington, D.C. 20231

By FAX: (703) 308-6916
Attn: Office of Petitions

By hand: Crystal Plaza Four, Suite CP4-3C23
2201 South Clark Place
Arlington, VA 22202

Telephone inquiries concerning this decision may be directed to the undersigned at (703) 305-9199.

John J. Gillon, Jr.
Senior Attorney
Office of Petitions
Office of the Deputy Commissioner
for Patent Examination Policy

OIPE JC105
JUN 04 2001
PATENT & TRADEMARK OFFICE

Sector 5
Box 1 Seq

PATENT APPLICATION

IN THE UNITED STATES PATENT AND TRADEMARK OFFICE

In the Application of

Shankar BALASUBRAMANIAN et al.

Attn: Box Missing Parts

Application No.: 09/771,708

Filed: January 30, 2001

Docket No.: 106632

For: ARRAYED BIOMOLECULES AND THEIR USE IN SEQUENCING

RESPONSE TO NOTICE TO FILE MISSING PARTS WITH DECLARATION

Director of the U.S. Patent and Trademark Office
Washington, D.C. 20231

Sir:

In response to the Notice to File Missing Parts of Application - Filing Date Granted (copy attached) mailed on April 3, 2001, submitted herewith is the executed Declaration of the inventor(s). Any specification attached to and referenced in the Declaration is a copy of the specification and any amendments thereto which were filed in the Office in order to obtain a filing date for the application.

Attached is our Check No. 118441 for ☐$130.00 ☒$65.00 (entitlement to small entity status is asserted) for the fee under 37 C.F.R. §1.16(e).

Also attached hereto is a Preliminary Amendment submitting a Sequence Listing.

Entry of these documents should complete all of the filing formalities and fully satisfy all requirements of the Notice to File Missing Parts. Accordingly, examination and allowance of this application in due course are respectfully solicited.

The Director is hereby authorized to charge any additional fee (or credit any overpayment) associated with this communication to Deposit Account No. 15-0461. Two duplicate copies of this paper are attached.

Respectfully submitted,

James A. Oliff
Registration No. 27,075

Joseph K. Hemby, Jr.
Registration No. 42,652

JAO:JKH/amw

Attachments:
Notice to File Missing Parts
Declaration
Preliminary Amendment

Date: June 4, 2001

OLIFF & BERRIDGE, PLC
P.O. Box 19928
Alexandria, Virginia 22320
Telephone: (703) 836-6400

DEPOSIT ACCOUNT USE AUTHORIZATION
Please grant any extension necessary for entry;
Charge any fee due to our Deposit Account No. 15-0461

#5

OIPE JC185
JUN 0 4 2001
PATENT & TRADEMARK OFFICE

UNITED STATES PATENT AND TRADEMARK OFFICE

COMMISSIONER FOR PATENTS
UNITED STATES PATENT AND TRADEMARK OFFICE
WASHINGTON, D.C. 20231
www.uspto.gov

APPLICATION NUMBER	FILING/RECEIPT DATE	FIRST NAMED APPLICANT	ATTORNEY DOCKET NUMBER
09/771,708	01/30/2001	Shankar Balasubramanian	106632

CONFIRMATION NO. 9485

FORMALITIES LETTER

OC000000005929391

25944
OLIFF & BERRIDGE, PLC
277 S. WASHINGTON STREET, SUITE 500
ALEXANDRIA, VA 22314

Date Mailed: 04/03/2001

NOTICE TO FILE MISSING PARTS OF NONPROVISIONAL APPLICATION

06/06/2001 HMOHAMM1 00000046 09771708

01 FC:205 65.00 OP

FILED UNDER 37 CFR 1.53(b)

Filing Date Granted

An application number and filing date have been accorded to this application. The item(s) indicated below, however, are missing. Applicant is given **TWO MONTHS** from the date of this Notice within which to file all required items and pay any fees required below to avoid abandonment. Extensions of time may be obtained by filing a petition accompanied by the extension fee under the provisions of 37 CFR 1.136(a).

- The oath or declaration is missing.
  A properly signed oath or declaration in compliance with 37 CFR 1.63, identifying the application by the above Application Number and Filing Date, is required.
- To avoid abandonment, a late filing fee or oath or declaration surcharge as set forth in 37 CFR 1.16(e) of $130 for a non-small entity, must be submitted with the missing items identified in this letter.
- **The balance due by applicant is $ 130.**

- This application does not contain a statement that the content of the sequence listing information recorded in computer readable form is identical to the written (on paper or compact disc) sequence listing and, where applicable, includes no new matter, as required by 37 CFR 1.821(e), 1.821(f), 1.821 (g), 1.825(b), or 1.825(d). Applicant must provide such statement. If the effective filing date is on or after September 8, 2000, see the final rulemaking notice published in the Federal Register at 65 FR 54604 (September 8, 2000) and 1238 OG 145 (September 19, 2000).
- A copy of the "Sequence Listing" in computer readable form has not been submitted as required by 37 C.F.R. 1.821(e). If the effective filing date is on or after September 8, 2000, see the final rulemaking notice published in the Federal Register at 65 FR 54604 (September 8, 2000) and 1238 OG 145 (September 19, 2000). Applicant must provide an initial computer readable form (CRF) copy of the "Sequence Listing" and a statement that the content of the sequence listing information recorded in computer readable form is identical to the written (on paper or compact disc) sequence listing and, where applicable, includes no new matter, as required by 37 CFR 1.821(e), 1.821(f), 1.821(g), 1.825 (b), or 1.825(d). If applicant desires the sequence listing in the instant application to be identical with that of another application on file in the U.S. Patent and Trademark Office, such request in accordance with 37 CFR 1.821(e) may be submitted in lieu of a new CRF.

For questions regarding compliance to these requirements, please contact:

- **For Rules Interpretation, call (703) 308-4216**
- **To Purchase PatentIn Software, call (703) 306-2600**
- **For PatentIn Software Program Help, call (703) 306-4119 or e-mail at patin21help@uspto.gov or patin3help@uspto.gov**

A copy of this notice MUST be returned with the reply.

Customer Service Center
Initial Patent Examination Division (703) 308-1202
PART 2 - COPY TO BE RETURNED WITH RESPONSE

UNITED STATES PATENT AND TRADEMARK OFFICE

COMMISSIONER FOR PATENTS
UNITED STATES PATENT AND TRADEMARK OFFICE
P.O. BOX 1450
ALEXANDRIA, VA 22313-1450
www.uspto.gov

NOV [illegible]

Kathleen M. Williams
PALMER & DODGE LLP
111 Huntington Avenue
Boston, MA 02199-7613

In re Application of	:	
Balasubramanian et al	:	
Serial No.: 09/771,708	:	Decision on Petition
Filed: January 30, 2001	:	
Attorney Docket No.: 24518/2012		

This is in response to applicants' "Petition to Accept Unintentionally Delayed Claim for Priority under 35 USC 119" filed February 28, 2003.

Applicants' statement has been considered. Applicants submit that the entire delay between the date the claim was due and the present time was unintentional. The petition was accompanied with the required surcharge under 37 CRF 1.17(t). Accordingly, the petition is Granted.

The delay of claiming priority to United Kingdom Application No. 0002310.01, filed February 1, 2000. is accepted.

Petition GRANTED.

Should there be any questions with respect to this decision, please contact Cecilia J. Tsang, by mail addressed to: Director, Technology Center 1600, Alexandria, VA 22313-1450, or by telephone at (703) 308-0254 or by facsimile transmission at (703) 305-7230.

Cecilia Tsang for
John Doll
Director, Technology Center 1600

UNITED STATES PATENT AND TRADEMARK OFFICE

COMMISSIONER FOR PATENTS
UNITED STATES PATENT AND TRADEMARK OFFICE
P.O. BOX 1450
ALEXANDRIA, VA 22313-1450
www.uspto.gov

MARTINE & PENILLA, LLP
710 LAKEWAY DRIVE
SUITE 170
SUNNYVALE, CA 94085

MAIL

JUN 2 4 2005

DIRECTOR OFFICE
TECHNOLOGY CENTER 2100

In re Application of: CHATANI
Application No. 09/771,751
Filed: January 29, 2001
For: CONTENT DISPLAY METHOD DURING DATA DOWNLOAD

DECISION ON PETITION UNDER 37 CFR § 1.181 TO WITHDRAW HOLDING OF ABANDONMENT

This is a decision on the "PETITION FOR REVIVAL FROM ABANDONED STATUS UNDER 37 CFR 1.181" filed 22 October 2004, which has been properly treated as a petition under 37 CFR § 1.181 to withdraw the holding of abandonment of the above-identified application.

The application was held abandoned for failure to timely file a proper reply to the Office letter mailed 14 April 2004. A Notice of Abandonment was mailed on 18 April 2005.

A copy of the Office letter mailed 14 April 2004 was attached to the petition. Although the Office letter includes an incorrect mailing address, applicant must have obtained a copy in order to file the copy of it with the petition. It is unclear from the petition when and how applicant obtained this copy. Applicant nowhere maintains that the Office action was not received and therefore does not establish any grounds for relief.

Additionally, any petition filed under 37 CFR 1.181 must be filed timely. Since Applicant does not indicate when he came into possession of the action or first became aware of the mailing, it is not clear whether the instant petition was timely filed.

Accordingly, the petition is **DISMISSED**.

If the petitioner desires further review of this Decision, applicant should consider filing a Request for Reconsideration within 2 months of the mailing date of this Decision.

Pinchus M. Laufer
Special Program Examiner
Technology Center 2100
Computer Architecture, Software and Information Security
571-272-3599

ds

UNITED STATES PATENT AND TRADEMARK OFFICE

COMMISSIONER FOR PATENTS
UNITED STATES PATENT AND TRADEMARK OFFICE
P.O. BOX 1450
ALEXANDRIA, VA 22313-1450
www.uspto.gov

MARTINE & PENILLA, LLP
710 LAKEWAY DRIVE
SUITE 170
SUNNYVALE, CA 94085

MAIL

AUG 2 9 2005

DIRECTOR OFFICE
TECHNOLOGY CENTER 2100

In re Application of: CHATANI
Application No. 09/771,751
Filed: January 29, 2001
For: CONTENT DISPLAY METHOD DURING DATA DOWNLOAD

DECISION ON PETITION UNDER 37 CFR § 1.181 TO WITHDRAW HOLDING OF ABANDONMENT

This is a decision on the "REQUEST FOR RECONSIDERATION OF PETITION FOR REVIVAL FROM ABANDONED STATUS UNDER 37 CFR 1.181" filed 21 July 2005.

The application was held abandoned for failure to timely file a proper reply to the Office letter mailed 14 April 2004. A Notice of Abandonment was mailed on 18 April 2005.

The request for reconsideration was filed in response to a dismissal of the original petition filed 22 October 2004. The petition was dismissed because applicant failed to maintain that the Office action was not received and because it was unclear whether the petition was timely filed.

Applicant's submission filed 21 July 2005 maintains that the Office action was not received and that only the front page of the Office action was received on 15 October 2004. Accordingly, both the Office letter mailed 14 April 2004 and the Notice of Abandonment mailed 18 April 2005 are hereby VACATED. The petition is **GRANTED**.

The Office regrets any inconvenience caused by the incorrect correspondence address.

The application is being forwarded to the Technology Center support staff for (1) correction of the correspondence address (the correct correspondence address being MARTINE & PENILLA, LLP, 710 LAKEWAY DRIVE, SUITE 170, SUNNYVALE, CA 94085) and (2) remailing of the Office action.

Pinchus M. Laufer
Special Program Examiner
Technology Center 2100
Computer Architecture, Software and Information Security
571-272-3599

UNITED STATES PATENT AND TRADEMARK OFFICE

COMMISSIONER FOR PATENTS
UNITED STATES PATENT AND TRADEMARK OFFICE
WASHINGTON, D.C. 20231
www.uspto.gov

Paper No. 16

3M INNOVATIVE PROPERTIES COMPANY
PO BOX 33427
ST. PAUL, MN 55133-3427

COPY MAILED

JAN 21 2003

OFFICE OF PETITIONS

In re Application of
Mike E. Hamerly et al
Application No. 09/771,757
Filed: January 29, 2001
Attorney Docket No. 56132USA9A.002

ON PETITION

This is a decision on the petition, filed January 17, 2003, under 37 CFR 1.313(c)(2) to withdraw the above-identified application from issue after payment of the issue fee.

The petition is **GRANTED**.

The above-identified application is withdrawn from issue for consideration of a submission under 37 CFR 1.114 (request for continued examination). See 37 CFR 1.313(c)(2).

Petitioner is advised that the issue fee paid on December 23, 2002 in the above-identified application cannot be refunded. If, however, the above-identified application is again allowed, petitioner may request that it be applied towards the issue fee required by the new Notice of Allowance.[1]

Telephone inquiries should be directed to Wan Laymon at (703) 306-5685.

After receipt of the application in the Office of Petitions, the application will be forwarded to Technology Center AU 2874 for processing of the request for continued examination under 37 CFR 1.114 and for consideration of the currently filed IDS.

Frances Hicks
Lead Petitions Examiner
Office of Petitions
Office of the Deputy Commissioner
for Patent Examination Policy

---

[1] The request to apply the issue fee to the new Notice must be made in writing and should be accompanied by the new Issue Fee Transmittal Form PTOL-85(b), along with a copy of this decision. Additionally, if the issue fee has increased from the previously paid issue fee, the balance due must be submitted. **Failure to timely request *in writing* that the previously paid issue fee be applied towards the new Notice and payment of any balance due will result in the abandonment of the application.**

UNITED STATES PATENT AND TRADEMARK OFFICE

Commissioner for Patents
United States Patent and Trademark Office
P.O. Box 1450
Alexandria, VA 22313-1450
www.uspto.gov

Erickson & Kleypas L.L.C.
80 W. 47th Street
Suite 401
Kansas City, MO 64112

COPY MAILED

OCT 2 8 2005

OFFICE OF PETITIONS

In re Application of :
Robert Henry Francis :
Application No. 09/771,799 : DECISION ON
Filed: January 29, 2001 : PETITION
Attorney Docket No. :

This is a decision on the petition under 37 CFR 1.181(a) filed September 6, 2005.

The petition is **granted**.

This application became abandoned for failure to file a timely reply to the final Office action mailed February 1, 2005. The Notice set forth an extendable statutory period for reply of three months from its mailing date. No response was believed to have been received within the allowed period and the application was held abandoned on May 1, 2005. A Notice of Abandonment was mailed August 22, 2005.

Applicant has demonstrated that a timely response to the final Office action was filed. A continuing application 11/173,024 was filed on July 1, 2005, accompanied by an request for an extension of time within the second month. Thus, a timely response to the final Office action was filed and the holding of abandonment was improper. The holding of abandonment is withdrawn, accordingly.

The application file is being forwarded to Technology Center 2100, GAU 2121 for further processing.

Telephone inquiries concerning this decision may be directed to the undersigned, at (571) 272-3222.

Kenya A. McLaughlin

Kenya A. McLaughlin
Petitions Attorney
Office of Petitions

UNITED STATES PATENT AND TRADEMARK OFFICE

Commissioner for Patents
United States Patent and Trademark Office
Washington, D.C. 20231
www.uspto.gov
DRW 01-02

Paper No. 5

BP AMOCO CORPORATION
DOCKET CLERK, LAW DEPARTMENT, M.C. 2207A
200 EAST RANDOLPH DRIVE
CHICAGO, IL 60601-7125

COPY MAILED

JAN 10 2002

OFFICE OF PETITIONS

In re Application of
Song et al.
Application No. 09/771,876
Filed: 29 January, 2001
Attorney Docket No. 38,058

ON PETITION

This is a decision on the petition filed 11 December, 2001, under 37 CFR 1.137(a)[1] to revive the above-identified application which is first treated as a petition to withdraw the holding of abandonment.

The petition is **dismissed**.

The application became abandoned on 30 May, 2001, for failure to timely file an oath or declaration and a surcharge for its late filing as required by the Notice to File Missing Parts of

---

[1]A grantable petition under 37 CFR 1.137(a) must be accompanied by:

(1) the required reply, unless previously filed; In a nonprovisional application abandoned for failure to prosecute, the required reply may be met by the filing of a continuing application. In a nonprovisional utility or plant application filed on or after June 8, 1995, and abandoned for failure to prosecute, the required reply may also be met by the filing of a request for continued examination in compliance with § 1.114. In an application or patent, abandoned or lapsed for failure to pay the issue fee or any portion thereof, the required reply must be the payment of the issue fee or any outstanding balance thereof.

(2) the petition fee as set forth in 37 CFR 1.17(l);

(3) a showing to the satisfaction of the Commissioner that the entire delay in filing the required reply from the due date for the reply until the filing of a grantable petition pursuant to 37 CFR 1.137(a) was unavoidable; and

(4) any terminal disclaimer (and fee as set forth in 37 CFR 1.20(d)) required pursuant to 37 CFR 1.137(c)).

Nonprovisional Application (hereinafter "Notice to File Missing Parts") mailed on 29 March, 2001, which set a two (2) month period for reply. No extensions of the time for reply in accordance with 37 CFR 1.136(a) were obtained. The filing of the present petition precedes the mailing of Notice of Abandonment.

Petitioners assert that the Notice to File Missing Parts mailed on 29 March, 2001, was never received. Petitioners further state that a status request was filed on 23 July, 2001. No response was received, petitioners state, to the status request, nor was a filing receipt ever received.

PETITION TO WITHDRAW THE HOLDING OF ABANDONMENT

Petitioners assert that the Notice to File Missing Parts mailed on 29 March, 2001, was never received. A review of the record indicates no irregularity in the mailing of the Office action, and in the absence of any irregularity in the mailing, there is a strong presumption that the Office action was properly mailed to the address of record. This presumption may be overcome by a showing that the Office action was not in fact received. The showing required to establish the failure to receive an Office action must include a statement from the practitioner stating that the Office communication was not received by the practitioner and attesting to the fact that a search of the file jacket and docket records indicates that the Office communication was not received. A copy of the docket record where the non-received Office communication would have been entered had it been received and docketed must be attached to and referenced in practitioner's statement.[2] The showing outlined above may not be sufficient if there are circumstances that point to a conclusion that the Office action may have been lost after receipt rather than a conclusion that the Office action was lost in the mail (e.g. if the practitioner has a history of not receiving Office action).

The showing of record is insufficient to warrant withdrawal of the holding of abandonment. Petitioner has not presented a copy of the docket record where the non-received Office communication would have been entered had it been received and docketed. Additionally, petitioner has not presented a statement from the practitioner attesting to the fact that a search of the file jacket and docket records indicates that the Office communication

---

[2] M.P.E.P. § 711.03(c); See Notice entitled "Withdrawing the Holding of Abandonment When Office Actions Are Not Received," 1156 O.G. 53 (November 16, 1993).

was not received. As the required showing has not been presented, the petition must be dismissed.

PETITION UNDER 37 CFR 1.137(a)

The Commissioner may revive an abandoned application if the delay in responding to the relevant outstanding Office requirement is shown to the satisfaction of the Commissioner to be "unavoidable".[3] Decisions on reviving abandoned applications on the basis of "unavoidable" delay have adopted the reasonably prudent person standard in determining if the delay was unavoidable:

> The word 'unavoidable' . . . is applicable to ordinary human affairs, and requires no more or greater care or diligence than is generally used and observed by prudent and careful men in relation to their most important business. It permits them in the exercise of this care to rely upon the ordinary and trustworthy agencies of mail and telegraph, worthy and reliable employees, and such other means and instrumentalities as are usually employed in such important business. If unexpectedly, or through the unforeseen fault or imperfection of these agencies and instrumentalities, there occurs a failure, it may properly be said to be unavoidable, all other conditions of promptness in its rectification being present.[4]

The showing of record is inadequate to establish unavoidable delay within the meaning of 35 U.S.C. § 133 and 37 CFR 1.137(a).[5] Specifically, an application is "unavoidably" abandoned only where petitioner, or counsel for petitioner, takes all action necessary for a proper response to the outstanding Office action,

---

[3] 35 U.S.C. § 133.

[4] In re Mattullath, 38 App. D.C. 497, 514-15 (1912)(quoting Ex parte Pratt, 1887 Dec. Comm'r Pat. 31, 32-33 (1887)); see also Winkler v. Ladd, 221 F. Supp. 550, 552, 138 USPQ 666, 167-68 (D.D.C. 1963), aff'd, 143 USPQ 172 (D.C. Cir. 1963); Ex parte Henrich, 1913 Dec. Comm'r Pat. 139, 141 (1913). In addition, decisions on revival are made on a "case-by-case basis, taking all the facts and circumstances into account." Smith v. Mossinghoff, 671 F.2d 533, 538, 213 USPQ 977, 982 (D.C. Cir. 1982). Finally, a petition cannot be granted where a petitioner has failed to meet his or her burden of establishing that the delay was "unavoidable." Haines v. Quigg, 673 F. Supp. 314, 316-17, 5 USPQ2d 1130, 1131-32 (N.D. Ind. 1987).

[5] See MPEP 711(c)(III)(C)(2) for a discussion of the requirements for a showing of unavoidable delay.

but through the intervention of unforeseen circumstances, such as failure of mail, telegraph, facsimile, or the negligence of otherwise reliable employees, the response is not timely received in the Office.[6]

A delay resulting from the lack of knowledge or improper application of the patent statute, rules of practice or the MPEP does not constitute an "unavoidable" delay.[7] A delay caused by an applicant's lack of knowledge or improper application of the patent statute, rules of practice or the MPEP is not rendered "unavoidable" due to (1) the applicant's reliance upon oral advice from Office employees; or (2) the Office's failure to advise the applicant of any deficiency in sufficient time to permit the applicant to take corrective action.[8]

In the present petition, petitioners have not presented a sufficient showing of unavoidable delay. The showing of record, the filing of a single letter requesting status, does not reflect diligence on the part of petitioner. While the Office attempts to timely respond to status requests, the Office has no obligation to notify parties of deficiencies in their responses in a manner permitting a timely correction.[9]

As petitioner has not provided a showing of evidence to satisfy the requirements of a grantable petition under 37 CFR 1.137(a), the petition will be dismissed.

ALTERNATIVE VENUE

Petitioner may wish to consider filing a renewed petition under 37 CFR 1.137(b), which now provides that where the delay in reply was unintentional, a petition may be filed to revive an abandoned application or a lapsed patent pursuant to 37 CFR 1.137(b). A

---

[6] Ex parte Pratt, 1887 Dec. Comm'r Pat. 31 (Comm'r Pat. 1887).

[7] See Haines v. Quigg, 673 F. Supp. 314, 317, 5 USPQ2d 1130, 1132 (N.D. Ind. 1987); Vincent v. Mossinghoff, 230 USPQ 621, 624 (D.D.C. 1985); Smith v. Diamond, 209 USPQ 1091 (D.D.C. 1981); Potter v. Dann, 201 USPQ 574 (D.D.C. 1978); Ex parte Murray, 1891 Dec. Comm'r Pat. 130, 131 (1891).

[8] See In re Sivertz, 227 USPQ 255, 256 (Comm'r Pat. 1985); see also In re Colombo, Inc., 33 USPQ2d 1530, 1532 (Comm'r Pat. 1994)(while the Office attempts to notify applicants of deficiencies in their responses in a manner permitting a timely correction, the Office has no obligation to notify parties of deficiencies in their response in a manner permitting a timely correction).

[9] Colombo, 39 USPQ2d 1530, 1532.

grantable petition pursuant to 37 CFR 1.137(b) must be accompanied by:

(1) the required reply, unless previously filed. In a nonprovisional application abandoned for failure to prosecute, the required reply may be met by the filing of a continuing application. In a nonprovisional utility or plant application filed on or after 8 June, 1995, and abandoned for failure to prosecute, the required reply may also be met by the filing of a request for continued examination in compliance with § 1.114. In an application or patent, abandoned or lapsed for failure to pay the issue fee or any portion thereof, the required reply must be the payment of the issue fee or any outstanding balance thereof.

(2) the petition fee as set forth in 37 CFR 1.17(m);

(3) a statement that the entire delay in filing the required reply from the due date for the reply until the filing of a grantable petition pursuant to 37 CFR 1.137(b) was unintentional. The Commissioner may required additional information where there is a question whether the delay was unintentional; and

(4) any terminal disclaimer (and fee as set forth in 37 CFR 1.20(d)) required pursuant to 37 CFR 1.137(c)).

The filing of a petition under the unintentional standard cannot be intentionally delayed and therefore should be filed promptly. A person seeking revival due to unintentional delay cannot make a statement that the delay was unintentional unless the entire delay, including the delay from the date it was discovered that the application was abandoned until the filing of the petition to revive under 37 CFR 1.137(b), was unintentional. A statement that the delay was unintentional is not appropriate if petitioner intentionally delayed the filing of a petition for revival under 37 CFR 1.137(b).

Should petitioner decide to file a petition under 37 CFR 1.137(b), the additional petition fee due would be $1,280.00.

A copy of the form for filing a petition under 37 CFR 1.137(b) to revive an application unintentionally abandoned is enclosed herewith for petitioner's convenience.

Further correspondence with respect to this matter should be addressed as follows:

By mail: Commissioner of Patents and Trademarks
Box DAC
Washington, D.C. 20231

Application No. 09/771,876

By FAX: (703)308-6916
Attn: Office of Petitions

By hand: Crystal Plaza Four, Suite CP4-3C23
2201 South Clark Place
Arlington, VA 22202

Telephone inquiries concerning this matter may be directed to the undersigned at (703)308-6918.

D Wood

Douglas I. Wood
Petitions Attorney
Office of Petitions
Office of the Deputy Commissioner
for Patent Examination Policy

Encls: Form PTO/SB/64
Privacy Act Notification

UNITED STATES PATENT AND TRADEMARK OFFICE

Commissioner for Patents
United States Patent and Trademark Office
Washington, D.C. 20231
www.uspto.gov
DIW 04-02

Paper No. 8

BP AMOCO CORPORATION
DOCKET CLERK, LAW DEPARTMENT, M.C. 2207A
200 EAST RANDOLPH DRIVE
CHICAGO IL 60601-7125

COPY MAILED

MAY 2 0 2002

OFFICE OF PETITIONS

In re Application of	:	
Song et al.	:	
Application No. 09/771,876	:	ON PETITION
Filed: 29 January, 2001	:	
Atty Docket No. 38,058	:	

This is a decision on the renewed petition under 37 CFR 1.137(a) and (b) filed on 14 March, 2001, to revive the above-identified application.

The petition under 37 CFR 1.137(a) is **GRANTED**.

The petition under 37 CFR 1.137(b) is **DISMISSED AS MOOT**.

The application became abandoned on 30 May, 2001, for failure to timely file an executed oath or declaration and the surcharge for its late filing as required by the Notice to File Missing Parts of Nonprovisional Application mailed on 29 March, 2001, which set a two (2) month period for reply. A petition under 37 CFR 1.137(a) was filed on 11 December, 2001, in which petitioners asserted that the Notice to File Missing Parts was never received. The petition was dismissed on 10 January, 2002.

The application has been restored to pending status.

No petition fee under 37 CFR 1.137(b) has been charged and none is due.

The application file is being forwarded to the Office of Initial Patent Examination for further processing.

Telephone inquiries concerning this matter may be directed to Petitions Attorney Douglas I. Wood, at (703)308-6918.

Beverly M. Flanagan
Supervisory Petitions Examiner
Office of Petitions
Office of the Deputy Commissioner
for Patent Examination Policy

UNITED STATES PATENT AND TRADEMARK OFFICE

COMMISSIONER FOR PATENTS
UNITED STATES PATENT AND TRADEMARK OFFICE
WASHINGTON, D.C. 20231
www.uspto.gov

Paper No. 7

COPY MAILED

MAY 0 2 2002

OFFICE OF PETITIONS

RONALD C. LUNDQUIST, PH.D.
Fish & Richardson P.C., P.A.
Suite 3300
60 South Sixth Street
Minneapolis MN 55402

In re Application of
Debonte, et al.
Application No. 09/771,904
Filed: April 9, 2001
Attorney Docket No. 07148-063003
For: FATTY ACID DESATURASES AND MUTANT SEQUENCES THEREOF

DECISION NOTING JOINDER OF INVENTOR AND PETITION UNDER 37 C.F.R. §1.47(a) MOOT

This is in response to the April 9, 2001 petition under 37 C.F.R. §1.47(a).

In view of the joinder of the inventors, further consideration under 37 C.F.R. §1.47(a) is not necessary and the petition is considered to be moot. This application does not have any Rule 1.47(a) status and no such status should appear on the file wrapper. This application need not be returned to this Office for further consideration under 37 C.F.R. §1.47(a).

This file is being forwarded to Technology Center 3700.

Telephone inquiries should be directed to the undersigned at 703-306-5593.

Scott M. Ledford
Petitions Attorney
Office of Petitions
Office of the Deputy Commissioner
for Patent Examination Policy

UNITED STATES PATENT AND TRADEMARK OFFICE

Commissioner for Patents
United States Patent and Trademark Office
P.O. Box 1450
Alexandria, VA 22313-1450
www.uspto.gov

BROWDY AND NEIMARK
624 NINTH STREET NW
SUITE 300
WASHINGTON, DC 20001-5303

COPY MAILED

MAR 17 2006

OFFICE OF PETITIONS

In re Application of	:	
Mehdi-Laurent Akkar et al	:	
Application No. 09/771,967	:	ON PETITION
Filed: January 30, 2001	:	
Attorney Docket No. AKKAR	:	

This is a decision on the petition under 37 CFR 1.137(b), filed December 27, 2005, to revive the above-identified application.

The petition is **GRANTED**.

The above-identified application became abandoned for failure to reply within the meaning of 37 CFR 1.113 in a timely manner to the final Office action mailed May 5, 2005, which set a shortened statutory period for reply of three (3) months. No extensions of time under the provisions of 37 CFR 1.136(a) were obtained. Accordingly, the above-identified application became abandoned on August 6, 2005.

The petition satisfies the conditions for revival pursuant to the provisions of 37 CFR 1.137(b) in that (1) the reply in the form of a Request for Continued Examination (RCE); (2) the petition fee; and (3) the required statement of unintentional delay have been received. Accordingly, the reply to the final Office action of May 5, 2005 is accepted as having been unintentionally delay.

Telephone inquiries concerning this decision should be directed to Wan Laymon at (571) 272-3220.

This matter is being referred to Technology Center AU 2137.

Wan Laymon

Wan Laymon
Petitions Examiner
Office of Petitions

SPE RESPONSE FOR CERTIFICATE OF CORRECTION

Paper No.: _____

DATE : 6/27/07

TO SPE OF : ART UNIT 2624

SUBJECT : Request for Certificate of Correction on Patent No.: 7142689

A response is requested with respect to the accompanying request for a certificate of correction.

Please complete this form and return with file, within 7 days to:
Palm location **7580, Certificates of Correction Branch – South Tower – 9A22**
If response is for an IFW, **return to employee (named below) via PUBSCofC Team in MADRAS.**
With respect to the change(s) requested, correcting Office and/or Applicant's errors, should the patent read as shown in the certificate of correction (COCIN)? No new matter should be introduced, nor should the scope or meaning of the claims be changed.

Valerie Jackson

Thank You For Your Assistance

Certificates of Correction Branch
Tel. No. 703-308-9390 ext. 114

The request for issuing the above-identified correction(s) is hereby:
Note your decision on the appropriate box.

- [x] **Approved** — **All** changes apply.
- [ ] **Approved in Part** — Specify below which changes **do not** apply.
- [ ] **Denied** — State the reasons for denial below.

Comments:

EILEEN LILLIS
SPE
SUPERVISORY PATENT EXAMINER

2624
Art Unit

UNITED STATES PATENT AND TRADEMARK OFFICE

COMMISSIONER FOR PATENTS
UNITED STATES PATENT AND TRADEMARK OFFICE
P.O. BOX 1450
ALEXANDRIA, VA 22313-1450
www.uspto.gov
DIW Apr-05

GREGG DORN
3274 KINROS CIRCLE
HERNDON VA 20171

COPY MAILED

APR 18 2005

OFFICE OF PETITIONS

In re Application of	:	
Gregg Randall Dorn	:	
Application No. 09/771,990	:	ON PETITION
Filed: 30 January, 2001	:	
For: Personal introduction	:	
System	:	

This is a decision on the petition under 37 CFR 1.137(a), filed on 10 September, 2004, to revive the above-identified application.

The petition is **DISMISSED**.

Any request for reconsideration of this decision must be submitted within TWO (2) MONTHS from the mail date of this decision. Extensions of time under 37 CFR 1.136(a) are permitted. The reconsideration request should include a cover letter entitled "Renewed Petition under 37 CFR 1.137(a)" or "Renewed Petition under 37 CFR 1.137(b)." This is not a final agency decision.

This application became abandoned on 19 March, 2004, for failure to submit a timely reply to the non-final Office action mailed on 18 December, 2003, which set a three (3) month shortened statutory period for reply. No extensions of the time for reply in accordance with 37 CFR 1.136(a) were obtained. Notice of Abandonment was mailed on 28 June, 2004.

Petitioner asserts unavoidable delay in that petitioner lacked the services of a patent attorney and was unable to afford to obtain the services of an attorney.

A grantable petition to revive an abandoned application under 37 CFR 1.137(a) must be accompanied by:

(1) the required reply, unless previously filed. In a nonprovisional application abandoned for failure to

> prosecute, the required reply may be met by the filing of a continuing application. In a nonprovisional utility or plant application filed on or after June 8, 1995, and abandoned for failure to prosecute, the required reply may also be met by the filing of a request for continued examination in compliance with § 1.114 In an application or patent, abandoned or lapsed for failure to pay the issue fee or any portion thereof, the required reply must be the payment of the issue fee or any outstanding balance thereof;
>
> (2) the petition fee as set forth in § 1.17(l);
>
> (3) a showing to the satisfaction of the Commissioner that the entire delay in filing the required reply from the due date for the reply until the filing of a grantable petition pursuant to this paragraph was unavoidable; and
>
> (4) any terminal disclaimer (and fee as set forth in § 1.20(d)) required pursuant to paragraph (c) of this section.

This petition lacks items (1) and (3) above.

Regarding item (1), petitioner has not filed a reply to the non-final Office action mailed on 18 December, 2003. The required reply to a first Office action on the merits may be met by the filing of an amendment, a request for reconsideration, or a continuing application. The required reply must accompany any renewed petition.

Regarding item (3), decisions on reviving abandoned applications on the basis of "unavoidable" delay have adopted the reasonably prudent person standard in determining if the delay was unavoidable:

> The word 'unavoidable' . . . is applicable to ordinary human affairs, and requires no more or greater care or diligence than is generally used and observed by prudent and careful men in relation to their most important business. It permits them in the exercise of this care to rely upon the ordinary and trustworthy agencies of mail and telegraph, worthy and reliable employees, and such other means and instrumentalities as are usually employed in such important business. If unexpectedly, or through the unforeseen fault or imperfection of these agencies and instrumentalities, there occurs a failure, it may properly be said to be

unavoidable, all other conditions of promptness in its rectification being present.[1]

The showing of record is inadequate to establish unavoidable delay within the meaning of 37 CFR 1.137(a). Specifically, an application is "unavoidably" abandoned only where petitioner, or counsel for petitioner, takes all action necessary for a proper response to the outstanding Office action, but through the intervention of unforeseen circumstances, such as failure or mail, telegraph, telefacsimile, or the negligence of otherwise reliable employees, the response is not timely received in the Office.[2]

Petitioner's arguments have been considered, but are not persuasive: petitioner is responsible for the proper prosecution of his application. Petitioner is responsible for the proper prosecution of his application. A delay resulting from the lack of knowledge or improper application of the patent statute, rules of practice or the MPEP does not constitute an "unavoidable" delay.[3] A delay caused by an applicant's lack of knowledge or improper application of the patent statute, rules of practice or the MPEP is not rendered "unavoidable" due to: (1) the applicant's reliance upon oral advice from Office employees; or (2) the Office's failure to advise the applicant of any deficiency in sufficient time to permit the applicant to take corrective action.[4]

---

[1] In re Mattullath, 38 App. D.C. 497, 514-15 (1912)(quoting Ex parte Pratt, 1887 Dec. Comm'r Pat. 31, 32-33 (1887)); see also Winkler v. Ladd, 221 F. Supp. 550, 552, 138 USPQ 666, 167-68 (D.D.C. 1963), aff'd, 143 USPQ 172 (D.C. Cir. 1963); Ex parte Henrich, 1913 Dec. Comm'r Pat. 139, 141 (1913). In addition, decisions on revival are made on a "case-by-case basis, taking all the facts and circumstances into account." Smith v. Mossinghoff, 671 F.2d 533, 538, 213 USPQ 977, 982 (D.C. Cir. 1982). Finally, a petition cannot be granted where a petitioner has failed to meet his or her burden of establishing that the delay was "unavoidable." Haines v. Quigg, 673 F. Supp. 314, 316-17, 5 USPQ2d 1130, 1131-32 (N.D. Ind. 1987).

[2] Ex parte Pratt, 1887 Dec. Comm'r Pat. 31 (Comm'r Pat. 1887).

[3] See Haines v. Quigg, 673 F. Supp. 314, 317, 5 USPQ2d 1130, 1132 (N.D. Ind. 1987), Vincent v, Mossinghoff, 230 USPQ 621, 624 (D.D.C. 1985); Smith v. Diamond, 209 USPQ 1091 (D.D.C. 1981); Potter v. Dann, 201 USPQ 574 (D.D.C. 1978); Ex parte Murray, 1891 Dec. Comm'r Pat. 130, 131 (1891).

[4] See In re Sivertz, 227 USPQ 255, 256 (Comm'r Pat. 1985); see also In re Colombo, Inc., 33 USPQ2d 1530, 1532 (Comm'r Pat. 1994)(while the Office attempts to notify applicants of deficiencies in their responses in a manner permitting a timely correction, the Office has no obligation to notify parties of deficiencies in their responses in a manner permitting a timely correction).

Petitioner was not forced, but rather made a conscious decision to prosecute the application *pro se*, and therefore must be held accountable for his actions, or lack thereof, before the Office. There are numerous resources available to petitioner, as to the others who have chosen this path of prosecution, to obtain the necessary information to prosecute the application before the Office. Specifically, it is noted that information regarding the current fees is available from the USPTO Internet site at http://www.uspto.gov. Additionally, petitioner could have retained a registered patent attorney or agent in the United States to assist in prosecution of this application. It is noted that petitioner states that he lacks sufficient funds to hire a patent attorney. While this is an unfortunate situation, it does not rise to the level of unavoidable delay.

In summary, the showing of record suggests that the abandonment resulted from a lack of diligence on the part of petitioner rather than as a result of unavoidable delay. As the showing presented is insufficient to establish unavoidable delay within the meaning of 35 U.S.C. § 133 and 37 CFR 1.137(a). Thus, the petition will be dismissed.

ALTERNATIVE VENUE

Petitioner may wish to consider filing a renewed petition under 37 CFR 1.137(b)[5], which now provides that where the delay in reply was unintentional, a petition may be filed to revive an abandoned application or a lapsed patent pursuant to 37 CFR 1.137(b).

---

[5]Effective December 1, 1997, the provisions of 37 CFR 1.137(b) now provide that where the delay in reply was unintentional, a petition may be filed to revive an abandoned application or a lapsed patent pursuant to 37 CFR 1.137(b). A grantable petition filed under the provisions of 37 CFR 1.137(b) must be accompanied by:

(1) the required reply, unless previously filed. In a nonprovisional application abandoned for failure to prosecute, the required reply may be met by the filing of a continuing application. In a nonprovisional utility or plant application filed on or after June 8, 1995, and abandoned for failure to prosecute, the required reply may also be met by the filing of a request for continued examination in compliance with § 1.114. In an application or patent, abandoned or lapsed for failure to pay the issue fee or any portion thereof, the required reply must be the payment of the issue fee or any outstanding balance thereof.

(2) the petition fee as set forth in 37 CFR 1.17(m);

(3) a statement that the entire delay in filing the required reply from the due date for the reply until the filing of a grantable petition pursuant to 37 CFR 1.137(b) was unintentional. The Commissioner may required additional information where there is a question whether the delay was unintentional; and

(4) any terminal disclaimer (and fee as set forth in 37 CFR 1.20(d)) required pursuant to 37 CFR 1.137(c)).

The filing of a petition under the unintentional standard cannot be intentionally delayed and therefore should be filed promptly. A person seeking revival due to unintentional delay cannot make a statement that the delay was unintentional unless the entire delay, including the delay from the date it was discovered that the application was abandoned until the filing of the petition to revive under 37 CFR 1.137(b), was unintentional. A statement that the delay was unintentional is not appropriate if petitioner intentionally delayed the filing of a petition for revival under 37 CFR 1.137(b).

A copy of the form for filing a petition under 37 CFR 1.137(b) to revive an application unintentionally abandoned is enclosed herewith for petitioner's convenience.

Further correspondence with respect to this matter should be addressed as follows:

By mail: Mail Stop Petition
Commissioner for Patents
P.O. Box 1450
Alexandria, VA 22313-1450

By FAX: (703)872-9306
Attn: Office of Petitions

By hand: Customer Service Window
Mail Stop Petition
Randolph Building
401 Dulany Street
Alexandria, VA 22314

Telephone inquiries concerning this matter may be directed to the undersigned at (571)272-3231.

D Wood

Douglas I. Wood
Senior Petitions Attorney
Office of Petitions

Enclosure: Form PTO/SB/64
Privacy Act Statement

UNITED STATES PATENT AND TRADEMARK OFFICE

Commissioner for Patents
United States Patent and Trademark Office
P.O. Box 1450
Alexandria, VA 22313-1450
www.uspto.gov

LOUIS M. HEIDELBERGER
REED SMITH
2500 ONE LIBERTY PLACE
PHILADELPHIA, PA 19103-7301

COPY MAILED

JAN 28 2005

OFFICE OF PETITIONS

In re Application of :
Doug Hutcheson et al :
Application No. 09/772,065 : ON PETITION
Filed: January 30, 2001 :
Attorney Docket No. 50310-00631 :

This is a decision on the petition under 37 CFR 1.137(b), filed January 7, 2005, to revive the above-identified application.

The petition is **GRANTED.**

The above-identified application became abandoned for failure to reply within the meaning of 37 CFR 1.113 in a timely manner to the final Office action mailed June 21, 2004, which set a shortened statutory period for reply of three (3) months. A one (1) month extension of time under the provisions of 37 CFR 1.136(a) was obtained. Accordingly, the above-identified application became abandoned on October 22, 2004.

The above-identified application is being revived solely for purposes of continuity with a submission under 37 CFR 1.114 (request for continued examination (RCE)).

An extension of time under 37 CFR 1.136 must be filed prior to the expiration of the maximum extendable period for reply. See In re Application of S., 8 USPQ2d 1630, 1631 (Comm'r Pats. 1988). Accordingly, since the $225 extension of time submitted with the petition on January 7, 2005 was subsequent to the maximum extendable period for reply, this fee is unnecessary and will be credited to petitioner's deposit account.

Telephone inquiries concerning this decision should be directed to Wan Laymon at (571) 272-3220.

This matter is being referred to Technology Center 2683 for processing of the request for continued examination under 37 CFR 1.114.

Wan Laymon

Wan Laymon
Petitions Examiner
Office of Petitions
Office of the Deputy Commissioner
for Patent Examination Policy

UNITED STATES PATENT AND TRADEMARK OFFICE

Commissioner for Patents
United States Patent and Trademark Office
P.O. Box 1450
Alexandria, VA 22313-1450
www.uspto.gov

EDWARD F. BEHM, JR.
REED SMITH LLP
2500 ONE LIBERTY PLACE
1650 MARKET STREET
PHILADELPHIA, PA 19103-7301

COPY MAILED
NOV 17 2006
OFFICE OF PETITIONS

In re Patent No. 6,959,183	:	
Issue Date: October 25, 2005	:	
Application No. 09/772,065	:	NOTICE
Filed: January 30, 2001	:	
Attorney Docket No. 01-40233-US	:	

This is a notice regarding your request for acceptance of a fee deficiency submission under 37 CFR 1.28. On September 1, 1998, the Court of Appeals for the Federal Circuit held that 37 CFR 1.28(c) is the sole provision governing the time for correction of the erroneous payment of the issue fee as a small entity. **See DH Technology v. Synergystex International, Inc. 154 F.3d 1333, 47 USPQ2d 1865 (Fed. Cir. Sept. 1, 1998).**

The Office no longer investigates or rejects original or reissue applications under 37 CFR 1.56. **1098 Off. Gaz. Pat. Office 502 (January 3, 1989).** Therefore, nothing in this Notice is intended to imply that an investigation was done.

Your fee deficiency submission under 37 CFR 1.28 is hereby **ACCEPTED**.

This file is no longer entitled to small entity status. Accordingly, all future fees in this file must be paid at the large entity rate, absent further notification from a proper party of a change in status. *See* 37 CFR 1.27(c)(2).

Inquiries related to this communication should be directed to the undersigned at (571) 272-3218.

Frances Hicks

Frances Hicks
Petitions Examiner
Office of Petitions

UNITED STATES PATENT AND TRADEMARK OFFICE

COMMISSIONER FOR PATENTS
UNITED STATES PATENT AND TRADEMARK OFFICE
P.O. BOX 1450
ALEXANDRIA, VA 22313-1450
www.uspto.gov

MCDONNELL BOEHNEN HULBERT & BERGHOFF LLP
300 S. WACKER DRIVE
32ND FLOOR
CHICAGO, IL 60606

COPY MAILED
AUG 17 2005
OFFICE OF PETITIONS

In re Application of	:	
Necka, et al.	:	
Application No. 09/772,095	:	DECISION REGARDING PTA
Filed: January 26, 2001	:	
Atty. Dkt. No.: 00,1281	:	

This decision is in response to the "REQUEST FOR CORRECTION OF PATENT TERM ADJUSTMENT," filed May 9, 2005. This request for reconsideration of patent term adjustment will be considered under 37 CFR 1.705(b).

The application for patent term adjustment ("PTA") under 37 CFR 1.705(b) is **GRANTED**.

The Office will adjust the PAIR screen to reflect that the Patent Term Adjustment (PTA) determination at the time of mailing of the Notice of Allowance and Issue Fee Due reflects an adjustment of 808 days. A copy of the updated PAIR screen showing the correct determination is enclosed.

Applicants request that the Determination of Patent Term Adjustment be corrected from 801 days, as indicated on the Determination of Patent Term Adjustment mailed March 1, 2005, to 808 days.

A review of the application history reveals that an adjustment of 801 days under 37 CFR 1.702(a)(1) can be attributed to the Office. In accordance with 37 CFR 1.703(a)(1), the adjustment began March 27, 2002, the day after the date that is fourteen months from the date the application was filed, and ended June 4, 2004, the date the non-final Office action was mailed.

The Office errantly entered August 27, 2004 as the date of reply to the non-final Office was filed rather than July 12, 2004, the date the application file history indicates a reply was filed.

Accordingly, a further adjustment of 7 days under 37 CFR 1.702(a)(2) can be attributed to the Office. In accordance with 37 CFR 1.703(a)(2), the reduction began November 13, 2004, the

day after the date that is four months after the date a reply to the non-final Office action was filed, and ended November 19, 2004, the date of mailing of final Office action.

In view thereof, at the time of Notice of Allowance the application is entitled to a patent term adjustment of 808 days, as argued.

The required fee of $200.00 (37 CFR 1.18(e)) for an application for patent term adjustment has been charged to Deposit Account No. 13-2490.

This application is being forwarded to the Office of Patent Publication for processing into a patent.

Telephone inquiries specific to this matter should be directed to Petitions Attorney Alesia M. Brown at (571) 272-3205.

Kery A Fries
for

Karin Ferriter
Senior Legal Advisor
Office of Patent Legal Administration
Office of Deputy Commissioner
for Patent Examination Policy

Enclosure: Copy of Adjustment PAIR Calculation

UNITED STATES PATENT AND TRADEMARK OFFICE

COMMISSIONER FOR PATENTS
UNITED STATES PATENT AND TRADEMARK OFFICE
P.O. BOX 1450
ALEXANDRIA, VA 22313-1450
www.uspto.gov

Paper No.

SYMYX TECHNOLOGIES INC
LEGAL DEPARTMENT
3100 CENTRAL EXPRESS
SANTA CLARA CA 95051

COPY MAILED
OCT 1 8 2006
OFFICE OF PETITIONS

In re Patent No. 6,759,014	:	
Dales et al.	:	DECISION ON REQUEST FOR
Application No. 09/772,101	:	RECONSIDERATION OF
Filed: January 26, 2001	:	PATENT TERM ADJUSTMENT
Atty Docket No. SMX 3104	:	and
(2000-108)	:	NOTICE OF INTENT TO ISSUE
	:	CERTIFICATE OF CORRECTION

This is a decision on the "APPLICATION FOR PATENT TERM ADJUSTMENT UNDER 37 CFR 1.705(d)," filed July 14, 2004. Patentees request that the patent term adjustment indicated in the Issue Notification (and on the patent) be corrected from six hundred fifty-four (654) days to seven hundred nine (709) days.

The request for reconsideration of the patent term adjustment under § 1.705(d) is **GRANTED**.

The patent term adjustment indicated in the patent is to be corrected by issuance of a certificate of correction showing a Patent Term Adjustment of **seven hundred nine (709)** days.

On July 6, 2004, the above-identified application matured into U.S. Patent No. 6,759,014, with a revised Patent Term Adjustment of 654 days. The instant request for reconsideration filed July 14, 2004 was timely filed within 2 months of the date the patent issued. See § 1.705(d). Patentees dispute the reduction of 55 days associated with the "miscellaneous incoming letter" received May 13, 2004. Patentees contend that this paper, an

election, although submitted after the mailing of the notice of allowance, was not a failure to engage in reasonable efforts to engage because it was filed in response to a request by the examiner made in the notice of allowance.

The facts and the circumstances of the filing of the election have been considered, and it is determined that under the circumstances the reduction of 55 days is not warranted. The record supports a conclusion that on March 4, 2004 the date of mailing of the notice of allowance applicants made a provisional election by telephone to the examiner. The examiner requested affirmation of the election in reply to the notice of allowance. Accordingly, the reduction of 55 days is being removed.

In view thereof, the patent term adjustment indicated in the patent should be seven hundred nine (709) days.

The Office acknowledges submission of the $200 fee set forth in 37 CFR 1.18(e). No additional fees are required.

The application file is being forwarded to the Certificates of Correction Branch for issuance of a certificate of correction in order to rectify this error. The Office will issue a certificate of correction indicating that the term of the above-identified patent is extended or adjusted by seven hundred nine (709) days.

Telephone inquiries specific to this matter should be directed to the undersigned at (571) 272-3219.

Nancy Johnson

Nancy Johnson
Senior Petitions Attorney
Office of Petitions

Enclosure: Copy of DRAFT Certificate of Correction

Day : Friday
Date: 10/13/2006

PALM INTRANET

Time: 08:43:38

PTA Calculations for Application: 09/772101			
Application Filing Date:	01/26/2001	PTO Delay (PTO):	709
Issue Date of Patent:	07/06/2004	Three Years:	0
Pre-Issue Petitions:	0	Applicant Delay (APPL):	55
Post-Issue Petitions:	0	Total PTA (days):	709
PTO Delay Adjustment:	55		

File Contents History

Number	Date	Contents Description	PTO	APPL	START
34	10/13/2006	ADJUSTMENT OF PTA CALCULATION BY PTO	55		
28	07/06/2004	PATENT ISSUE DATE USED IN PTA CALCULATION			
27	06/04/2004	RECEIPT INTO PUBS			
26	06/02/2004	APPLICATION IS CONSIDERED READY FOR ISSUE			
25	05/13/2004	ISSUE FEE PAYMENT VERIFIED			
24	01/26/2001	WORKFLOW - DRAWINGS FINISHED			
23	05/13/2004	MISCELLANEOUS INCOMING LETTER		55	23
22	05/19/2004	RECEIPT INTO PUBS			
21	05/13/2004	ISSUE FEE PAYMENT RECEIVED			
20	04/09/2004	RECEIPT INTO PUBS			
19	04/08/2004	WORKFLOW - FILE SENT TO CONTRACTOR			
18	03/04/2004	MAIL NOTICE OF ALLOWANCE	709		-1
17	03/03/2004	ISSUE REVISION COMPLETED			
16	03/03/2004	NOTICE OF ALLOWANCE DATA VERIFICATION COMPLETED			
15	03/03/2004	NOTICE OF ALLOWABILITY			
14	02/09/2004	MISCELLANEOUS INCOMING LETTER			
13	02/12/2004	CASE DOCKETED TO EXAMINER IN GAU			
12	10/27/2003	IFW TSS PROCESSING BY TECH CENTER COMPLETE			
11	01/14/2003	INFORMATION DISCLOSURE STATEMENT (IDS) FILED			
10	08/29/2002	INFORMATION DISCLOSURE STATEMENT (IDS) FILED			
9	08/21/2001	PRELIMINARY AMENDMENT			
		INFORMATION DISCLOSURE STATEMENT (IDS)			

8	04/06/2001	FILED			
7	06/04/2001	CASE DOCKETED TO EXAMINER IN GAU			
6	05/25/2001	APPLICATION DISPATCHED FROM OIPE			
5	03/07/2001	APPLICATION IS NOW COMPLETE			
4	03/07/2001	NOTICE MAILED--APPLICATION INCOMPLETE--FILING DATE ASSIGNED			
3	03/06/2001	CORRESPONDENCE ADDRESS CHANGE			
2	02/17/2001	IFW SCAN & PACR AUTO SECURITY REVIEW			
1	01/26/2001	INITIAL EXAM TEAM NN			

Search Another: Application# Search

EXPLANATION OF PTA CALCULATION

EXPLANATION OF PTE CALCULATION

To go back use Back button on your browser toolbar.

Back to PALM | ASSIGNMENT | OASIS | Home page

UNITED STATES PATENT AND TRADEMARK OFFICE

CERTIFICATE OF CORRECTION

PATENT : 6,759,014 B2

DATED : July 6, 2004

INVENTOR(S) : Dales et al.

DRAFT

It is certified that error appears in the above-identified patent and that said Letters Patent is hereby corrected as shown below:

On the cover page,.

[*] Notice: Subject to any disclaimer, the term of this patent is extended or adjusted under 35 USC 154(b) by (654) days

Delete the phrase "by 654" and insert – by 709 days--

UNITED STATES PATENT AND TRADEMARK OFFICE

Commissioner for Patents
United States Patent and Trademark Office
Washington, D.C. 20231
www.uspto.gov

OIPE JC181
FEB 2 0 2003
PATENT & TRADEMARK OFFICE

COPY

Paper No. 14

Doreen M. Hogle ESQ
Hamilton Brook Smith & Reynolds
Two Militia Drive
Lexington, MA 02421-4799

COPY MAILED

DEC 1 9 2002

OFFICE OF PETITIONS

In re Application of
Ozelius et al.
Application No. 09/461,921
Filed: December 15, 1999
Attorney Docket No. 0838.1001-008

ON PETITION

This is a decision on the petition under 37 CFR 1.137(b), filed November 13, 2002, to revive the above-identified application.

The petition is **GRANTED**.

The above-identified application became abandoned for failure to reply in a timely manner in reply to the non-final Office action mailed October 25, 2000, which set a period of reply of One Month from the mail date of the Notice. No extensions of time under the provisions of 37 CFR 1.136(a) have been obtained. Accordingly, the application became abandoned on November 26, 2000.

Telephone inquiries regarding this decision should be directed to Latrice Bond at (703) 308-6911.

The application file is being forwarded to Technology Center AU 1655 for further processing.

Latrice Bond

Latrice Bond
Paralegal Specialist
Office of Petitions
Office of the Deputy Commissioner
for Patent Examination Policy

RECEIVED
DEC 24 2002
HAMILTON, BROOK,
SMITH & REYNOLDS, P.C.

#3
11-26-02

UNITED STATES PATENT AND TRADEMARK OFFICE

COMMISSIONER FOR PATENT
UNITED STATES PATENT AND TRADEMARK OFFIC
WASHINGTON, D.C. 20231
www.uspto.go

NOV 26 2002

Paper No. 3

Morgan & Finnegan, L.L.P
345 Park Avenue
New York, New York 10154

In re Application of: Robert Gagnon et al.	)	
Application No. 09/772,132	)	**DECISION ON PETITION TO MAKE**
Filed: January 29, 2001	)	**SPECIAL UNDER 37 C.F.R. §1.102**
For: METHOD AND SYSTEM FOR	)	**AND M.P.E.P. §708.02(XI)**
WIRELESS ACCESS TO A USER'S	)	
COMPUTER	)	

This is a decision on the petition to make special filed October 31, 2002 under 37 C.F.R. §102(d) and M.P.E.P. §708.02(XI): Inventions For Countering Terrorism.

The petition is **DISMISSED**.

M.P.E.P. §708.02 (XI), which sets out the prerequisites for a grantable petition for Inventions For Countering Terrorism under 37 C.F.R. § 1.102(d), states in relevant part:

> International terrorism as defined in 18 U.S.C. 2331 includes "activities that - (A) involve violent acts or acts dangerous to human life that are a violation of the criminal laws of the United States or of any State, or that would be a criminal violation if committed within the jurisdiction of the United States or of any State; [and] (B) appear to be intended - (I) to intimidate or coerce a civilian population; (ii) to influence the policy of a government by intimidation or coercion; or (iii) to affect the conduct of a government by assassination or kidnapping..." The types of technology for countering terrorism could include, but are not limited to, systems for detecting/identifying explosives, aircraft sensors/security systems, and vehicular barricades/disabling systems.
>
> Applicants who desire that an application relating to inventions for countering terrorism be made special should file a petition with the petition fee under 37 CFR 1.17(h) requesting the Patent and Trademark Office to make the application special. The petition for special status should be accompanied by a statement explaining how the invention contributes to countering terrorism.

Petitioner's submission fails to meet the criteria set out with respect to countering terrorism in M.P.E.P. §708.02(XI). The claimed invention is generally directed to a system for wireless access to a computer. Note, that there is no mention of terrorist activity in the disclosure. A flexible system for wireless access does not directly prevent "violent acts or acts dangerous to human life that are a violation of the criminal laws of the United States or of any State" or activities "that would be a

criminal violation if committed within the jurisdiction of the United States or of any State". Furthermore, although the system may be employed by members of law enforcement, wireless access does not directly prevent acts that appear to be intended to intimidate or coerce a civilian population, influence the policy of a government by intimidation or coercion, or affect the conduct of a government by assassination or kidnapping.

As a result, no advancement in the technology of countering terrorism has been persuasively shown.

Accordingly, the petition is **DISMISSED**. The application file is being forwarded to Central Files to await examination in its proper turn based on its effective filing date.

Any request for reconsideration must be filed within TWO MONTHS of the mailing date of this decision.

It is suggested that Applicant review M.P.E.P. §708.02 regarding other grounds available for filing a petition to make special. In particular, note M.P.E.P. §708.02(VIII): Accelerated Examination, which does not place limitations on the subject matter of the application.

Pinchus M. Laufer
Special Programs Examiner
Technology Center 2100
Computer Security, Architecture, and Software
(703) 306-4160

UNITED STATES PATENT AND TRADEMARK OFFICE

COMMISSIONER FOR PATENTS
UNITED STATES PATENT AND TRADEMARK OFFICE
WASHINGTON, D.C. 20231
www.uspto.gov

Paper No. 6

Perkins, Smith & Cohen LLP
One Beacon Street
30th Floor
Boston, MA 02108

COPY MAILED
APR 18 2002
OFFICE OF PETITIONS

In re Application of :
John L. Cartier :
Application No. 09/772,172 :
Filed: January 29, 2001 :
Attorney Docket No. 09221-P01 :

ON PETITION

This is a decision on the petition under 37 CFR 1.137(b), filed January 30, 2002, to revive the above-identified application.

The petition is **GRANTED**.

The above-identified application became abandoned for failure to reply in a timely manner to the Notice to File Corrected Application Papers mailed March 12, 2001. The Notice set a period for reply of two (2) months from the mail date of the Notice. No extensions of time under the provisions of 37 CFR 1.136(a) were obtained. Accordingly, the above-identified application became abandoned on May 13, 2001.

Telephone inquiries concerning this decision should be directed to Cheryl Gibson-Baylor at (703)308-5111, or in her absence, Sherry Brinkley at (703)305-9220.

The application file is being forwarded to Office of Initial Patent Examination for further processing.

Cheryl Gibson-Baylor
Petitions Examiner
Office of Petitions
Office of the Deputy Commissioner
for Patent Examination Policy

Sherry Brinkley
Petitions Examiner

UNITED STATES PATENT AND TRADEMARK OFFICE

Commissioner for Patents
United States Patent and Trademark Office
P.O. Box 1450
Alexandria, VA 22313-1450
www.uspto.gov

HAMILTON BROOK SMITH AND REYNOLDS PC
530 VIRGINIA ROAD
CONCORD, MA 01742

COPY MAILED

APR 1 1 2007

OFFICE OF PETITIONS

In re Application of	:	
James A. **PROCTOR, Jr.**	:	
Application No. 09/772,176	:	DECISION ON PETITION
Filed: January 29, 2001	:	TO WITHDRAW
Attorney Docket No. 2479.2071-000	:	FROM RECORD
	:	

This is a decision on the Request to Withdraw as attorney or agent of record under 37 C.F.R. § 1.36(b), filed December 11, 2006.

The request is **NOT APPROVED** as moot.

A review of the file record indicates that the power of attorney to David J. Thibodeau of HAMILTON BROOK SMITH AND REYNOLDS PC has been revoked by the assignee of the patent application on February 14, 2007. Accordingly, the request to withdraw under 37 C.F.R. § 1.36(b) is moot.

All future communications from the Office will continue to be directed to the below-listed address until otherwise notified by applicant.

Telephone inquires concerning this decision should be directed to the undersigned at 571-272-7253.

Monica A. Graves
Petitions Examiner
Office of Petitions

cc: **VOLPE AND KOENIG, P.C.**
DEPT. ICC
UNITED PLAZA, SUITE 1600
30 SOUTH 17TH STREET
PHILADELPHIA PA 19103

UNITED STATES PATENT AND TRADEMARK OFFICE

COMMISSIONER FOR PATENTS
UNITED STATES PATENT AND TRADEMARK OFFICE
P.O. BOX 1450
ALEXANDRIA, VA 22313-1450
www.uspto.gov

MAR -3 2004

Paper No. 22

In re Application of
Sheldon Sturgis *et al*
Application No. 09/772,189
Filed: January 29, 2001
Attorney Docket No. 13578.1US01

: DECISION ON PETITION

This is a decision on the petition filed on January 23, 2004 by which petitioners request withdrawal of the holding that this application stands abandoned for failure to timely file a reply to the Office letter dated May 23, 2003. No fee is required for the petition, which is considered pursuant to 37 CFR 1.181.

The petition is granted.

Petitioners allege that this application is not abandoned. Petitioners support their allegation by enclosing a copy of a reply to the Office letter in question, a copy of a petition for a three month extension of time, and a copy of a filing receipt for the reply showing that the reply, petition and fee for the extension were received in the Office on November 28, 2003. The reply and petition for extension each have affixed thereto a 37 CFR 1.8(a) certificate of transmission dated November 24, 2003, the Monday immediately following the date upon which the period for filing a timely reply, as extended, expired. As a reply to the Office letter in question was filed within the time for filing a reply as set by the Office letter in question and thereafter extended, it is clear that this application is not abandoned. See 37 CFR 1.8(b). It is also noted that Office financial records confirm receipt of the extension of time fee.

Accordingly, the Notice of Abandonment is hereby vacated, the holding of abandonment is withdrawn, and the application is restored to pending status. The application will be forwarded to the examiner for action on the reply filed on November 28, 2003, certificate of transmission date November 24, 2003.

PETITION GRANTED.

E. Rollins-Cross, Director
Technology Center 3700

Merchant & Gould, PC
P.O. Box 2903
Minneapolis, MN 55402-0903

UNITED STATES PATENT AND TRADEMARK OFFICE

Commissioner for Patents
United States Patent and Trademark Office
P.O. Box 1450
Alexandria, VA 22313-1450
www.uspto.gov

Merchant & Gould PC
P.O. Box 2903
Minneapolis, MN 55402-0903

COPY MAILED
JAN 12 2009

In re Application of	:	
Sheldon Sturgis et al.	:	
Application No. 09/772,189	:	DECISION ON PETITION
Filed: January 29, 2001	:	
Attorney Docket No. 13578.1US01	:	

This is a decision on the petition under the unintentional provisions of 37 CFR 1.137(b), filed August 25, 2008, to revive the above-identified application.

The petition is **GRANTED**.

The application became abandoned for failure to timely file a reply within the meaning of 37 CFR 1.113 to the final Office action of November 28, 2007. The proposed reply required for consideration of a petition to revive must be a Notice of Appeal (and appeal fee required by 37 CFR 41.20(b)(2), an amendment that *prima facie* places the application in condition for allowance, a Request for Continued Examination and submission (37 CFR 1.114), or the filing of a continuing application under 37 CFR 1.53(b). See MPEP 711.03(c)(III)(A)(2). A three (3) month extension of time pursuant to the provisions of 37 CFR 1.136(a) was obtained. Accordingly, the date of abandonment of this application is May 29, 2008.

The petition satisfies the requirements of 37 CFR 1.137(b) in that petitioner has supplied (1) the reply in the form of a Request for Continued Examination (RCE) and fee of $405, and the submission required by 37 CFR 1.114; (2) the petition fee of $770; and (3) a proper statement of unintentional delay.

It is not apparent whether the person signing the statement of unintentional delay was in a position to have firsthand or direct knowledge of the facts and circumstances of the delay at issue. Nevertheless, such statement is being treated as having been made as the result of a reasonable inquiry into the facts and circumstances of such delay. See 37 CFR 10.18(b) and Changes to Patent Practice and Procedure; Final Rule Notice, 62 Fed. Reg. 53131, 53178 (October 10, 1997), 1203 Off. Gaz. Pat. Office 63, 103 (October 21, 1997). In the event that such an inquiry has not been made, petitioner must make such an inquiry. If such inquiry results in the discovery that it is not correct that the entire delay in filing the required reply from the due

date for the reply until the filing of a grantable petition pursuant to 37 CFR 1.137(b) was unintentional, petitioner must notify the Office.

There is no indication that the person signing the petition was ever given a power of attorney to prosecute the application. If the person signing the petition desires to receive future correspondence regarding this application, the appropriate power of attorney document must be submitted. While a courtesy copy of this decision is being mailed to the person signing the petition, all future correspondence will be directed to the address currently of record until appropriate instructions are received.

Telephone inquiries concerning this decision should be directed to Shelley Clement at (571)272-6052 or in her absence to the undersigned at (571)272-7099.

This application is being referred to Technology Center AU3782 for processing of the RCE and for appropriate action by the Examiner in the normal course of business on the amendment submitted in accordance with 37 CFR 1.114.

for David Bucci
Petitions Examiner
Office of Petitions

cc Mark E. Deffner
Suite 3000, Plaza VII
45 South 7th Street
Minneapolis, MN 55402-1630

UNITED STATES PATENT AND TRADEMARK OFFICE

Commissioner for Patents
United States Patent and Trademark Office
P.O. Box 1450
Alexandria, VA 22313-1450
www.uspto.gov

COPY MAILED

AUG 0 1 2005

OFFICE OF PETITIONS

Denise Runde
3485 N. Maryland Avenue
Milwaukee, WI 53211

In re Application of
Runde
Application No. 09/772,201
Filed: January 29, 2001
For: System for the Delivery of Health Care

Decision on Petition

This is a decision on the petition under 37 CFR 1.137(b), filed May 5, 2005, to revive the above-identified application.

The petition is **DISMISSED**.

Any request for reconsideration must be submitted within TWO (2) MONTHS from the mail date of this decision. No further petition fee is required for the request. Extensions of time under 37 CFR 1.136(a) are permitted. The reconsideration request should include a cover letter entitled "Renewed Petition under 37 CFR 1.137(b)."

This application became abandoned for failure to timely reply to the non-finalOffice action mailed September 10, 2004. No extensions of time under the provisions of 37 CFR 1.136(a) were obtained. Accordingly, this application became abandoned on December 11, 2004. A Notice of Abandonment was mailed April 6, 2005.

The merits of a petition under 37 CFR 1.137(b) cannot be considered until the full petition fee has been submitted. The fee for a petition under 37 CFR 1.137(b) is $750 for a small entity. The fee of only $250 applies when one seeks to revive an application and proves that the entire period of abandonment was unavoidable.

If petitioner wishes for the Office to consider the merits of the instant petition, an additional $500 must be submitted.

Further correspondence with respect to this matter should be addressed as follows:

By mail: Mail Stop Petition
Commissioner for Patents
P.O. Box 1450
Alexandria, VA 22313-1450

By facsimile: (571) 273-8300
Attn: Office of Petitions

If a request for reconsideration is filed, and a decision on the new petition is not received within three months, petitioner may wish to call the number below to check on the status of the renewed petition.

Telephone inquiries should be directed to Petitions Attorney Steven Brantley at (571) 272-3203.

Charles Steven Brantley
Petitions Attorney
Office of Petitions

UNITED STATES PATENT AND TRADEMARK OFFICE

Commissioner for Patents
United States Patent and Trademark Office
P.O. Box 1450
Alexandria, VA 22313-1450
www.uspto.gov

SALIWANCHIK LLOYD &
SALIWANCHIK
A PROFESSIONAL ASSOCIATION
PO BOX 142950
GAINESVILLE, FL 32614-2950

COPY MAILED

AUG 17 2005

OFFICE OF PETITIONS

In re Application of	:	
Fouillet et al.	:	
Application No. 09/772,280	:	DECISION ON APPLICATION
Filed: January 29, 2001	:	FOR
Atty Docket No. G-069US02CIP	:	PATENT TERM ADJUSTMENT
	:	

This is a decision on the "APPLICATION FOR PATENT TERM ADJUSTMENT UNDER 37 CFR §1.705(b)," filed April 8, 2005. Applicants assert entitlement to two hundred twenty-seven (227) days of patent term adjustment. In part, applicants request reconsideration on the basis of the Office taking in excess of three years to issue the patent.

As it relates to the Office's failure to issue the patent within 3 years of the filing date, a decision is being held in abeyance until after the actual patent date. Knowledge of the actual date the patent issues is required to calculate the amount, if any, of additional patent term patentee is entitled to for Office failure to issue the patent within 3 years. See § 1.703(b).

Patentee is given TWO (2) MONTHS from the issue date of the patent to file a written request for reconsideration of the patent term adjustment for Office failure to issue the patent within 3 years. A copy of this decision should accompany the request. Patentee may seek such consideration without payment of an additional fee. However, as to all other bases for seeking reconsideration of the patent term adjustment indicated

in the patent, all requirements of § 1.705(d) must be met. Requests for reconsideration on other bases must be timely filed and must include payment of the required fee.

The request for reconsideration of the patent term adjustment at the time of mailing of the notice of allowance is otherwise **DISMISSED**.

On January 10, 2005, the Office mailed the initial Determination of Patent Term Adjustment under 35 U.S.C. 154(b) in the above-identified application. The Notice stated that the patent term adjustment to date is 0 days. On April 8, 2005, applicants timely[1] submitted an application for patent term adjustment (with required fee). Therein, applicants asserted, inter alia, that a period of reduction of 86 days, not 87 days, should have been entered for applicant delay in responding to the non-final Office action mailed June 20, 2002. In addition, applicants asserted that a period of reduction of 5 days should have been entered for Office delay in mailing the notice of allowance.

Applicants' assertions are not well taken. Applicants' response to the non-final Office action mailed June 20, 2002, was not received into the Office until December 16, 2002, three months and 87 days later. Pursuant to § 1.704(b), this constitutes a delay of 87 days (not 86 days). Furthermore, there is no Office delay associated with the mailing of the notice of allowance. The notice of allowance was mailed on January 10, 2005, in response to, and within four months of, applicants' filing of a response on October 5, 2004.

In view thereof, the patent term adjustment at the time of mailing of the notice of allowance is zero (0) days (83 days of Office delay reduced by 242 (87 + 31 + 32 + 92) days of applicant delay).

Petitioner is reminded that if an application is entitled to an adjustment under 35 U.S.C. 154(b)(1)(B), the entire period during which the application was pending (except for periods excluded under 35 U.S.C. 154(b)(1)(B)(i)-(iii)), and not just the period beginning three years after the actual filing date of the application, is the period of delay under 35 U.S.C. 154(b)(1)(B) in determining whether periods of delay overlap

[1] Office records indicate that the Issue Fee payment was also received on April 8, 2005.

under 35 U.S.C. 154(b)(2)(A). Thus, any days of delay for Office issuance of the patent more than 3 years after the filing date of the application which overlap with the days of patent term adjustment accorded prior to the issuance of the patent will not result in any additional patent term adjustment. See 35 U.S.C. 154(b)(1)(B), 35 U.S.C. 154(b)(2)(A), and 37 CFR § 1.703(f). See also Revision of Patent Term Extension and Patent Term Adjustment Provisions; Final Rule, 69 Fed. Reg. 21704 (April 22, 2004).

The Office acknowledges submission of the $200.00 fee set forth in 37 CFR 1.18(e). No additional fees are required.

The application file is being forwarded to the Office of Patent Publication for issuance of the patent.

Telephone inquiries specific to this matter should be directed to Nancy Johnson, Senior Petitions Attorney, at (571) 272-3219.

Karin A Ferriter
for

Karin Ferriter
Senior Legal Advisor
Office of Patent Legal Administration
Office of Deputy Commissioner
for Patent Examination Policy

UNITED STATES PATENT AND TRADEMARK OFFICE

COMMISSIONER FOR PATENTS
UNITED STATES PATENT AND TRADEMARK OFFICE
P.O. BOX 1450
ALEXANDRIA, VA 22313-1450
www.uspto.gov

Saliwanchik, Lloyd & Saliwanchik
P. O. Box 142950
Gainesville, FL 32614-2950

COPY MAILED

SEP 27 2005

OFFICE OF PETITIONS

In re Application of	:	
Yves Fouillet, et al.	:	
Application No. 09/772,280	:	ON PETITION
Filed: January 29, 2001	:	
Attorney Docket No. G-069US02CIP	:	

This is a decision on the petition, filed July 15, 2005, which is being treated as a request under 37 CFR 3.81(b)[1] to add the second assignee's name on the Fee(s) Transmittal form PTOL-85(b) so that the Letters Patent will issue to both assignees.

The request is **DISMISSED**.

Petitioner states that the second assignee's name is Commissariat A L'Energie Atomique and was unintentionally not included on the Fee(s) Transmittal form PTOL-85(b) at the time of payment of the issue fee. Accordingly, petitioner requests that the patent issue to Serono Genetics Institute, S.A. and Commissariat A L'Energie Atomique.

37 CFR 3.81(b), effective June 25, 2004, reads:

> *After payment of the issue fee:* Any request for issuance of an application in the name of the assignee submitted after the date of payment of the issue fee, and any request for a patent to be corrected to state the name of the assignee, must state that the assignment was submitted for recordation as set forth in § 3.11 before issuance of the patent, and must include a request for a certificate of correction under § 1.323 of this chapter (accompanied by the fee set forth in § 1.20(a) and the processing fee set forth in § 1.17(i) of this chapter.

[1] *See* Official Gazette of June 22, 2004

The request under 37 CFR 3.81(b) was not accompanied by a request for a certificate of correction (and fee) as required by 3.81(b). As petitioner has failed to comply with the provisions of 37 CFR 3.81(b), the request cannot be granted at this time.

A review of Office database assignment records reflects that an assignment to Serono Genetics Institute, S.A. and Commissariat A L'Energie Atomique has been recorded. Therefore, upon submission of the required certificate of correction and fee, it would be appropriate for the Office to issue a certificate of correction to correct the front page of the Letters Patent to reflect that Serono Genetics Institute, S. A. and Commissariat A L'Energie Atomique were the assignees of record at the time of issuance of the application into a patent. *Note also* 35 U.S.C. § 152.

In view of the above and **after issuance of this application into a patent, the Certificates of Correction Branch is instructed to issue a certificate of correction upon submission by petitioner of a request for a certificate of correction (and fee) which sets forth Serono Genetics Institute, S.A.** and **Commissariat A L'Energie Atomique, as the assignees**. *No certificate of correction will be issued which sets forth an assignee other than the assignee set forth in this request. A copy of this decision **must** accompany the request for a Certificate of Correction.*

No further renewed request under 37 CFR 3.81(b) is necessary for consideration by the Office of Petitions for issuance of a certificate of correction in the name of the assignees set forth in this request, as this decision operates as an instruction to the Certificates of Correction Branch to issue the requested certificate of correction.

Alternatively, if petitioner desires to have the correct assignee data appear on the front page of the Letters Patent, petitioner may wish to consider filing a petition to withdraw the subject application from issue under 37 CFR 1.313(c)(2). The petition to withdraw from issue under 37 CFR 1.313(c)(2) must be accompanied by a request for continued examination (RCE) and submission (which may be a request under 37 CFR 3.81(b)).

Inquiries concerning this decision should be directed to the undersigned at (571) 272-3223. Any questions concerning issuance of a certificate of correction should be directed to the Certificates of Correction Branch at (703) 305-8309.

Marianne E. Jenkins

Marianne E. Jenkins
Petitions Examiner
Office of Petitions

UNITED STATES PATENT AND TRADEMARK OFFICE

Commissioner for Patents
United States Patent and Trademark Office
P.O. Box 1450
Alexandria, VA 22313-1450
www.uspto.gov

PATTERSON & SHERIDAN, LLP
SEDNA PATENT SERVICES, LLC
595 SHREWSBURY AVENUE
SUITE 100
SHREWSBURY, NJ 07702

COPY MAILED

MAY 3 1 2006

OFFICE OF PETITIONS

In re Application of :
Yong Ho Son et al :
Application No. 09/772,288 : ON PETITION
Filed: January 29, 2001 :
Attorney Docket No. DIVA/255

This is a decision on the petition filed, May 18, 2006 under 37 CFR 1.313(c)(2) to withdraw the above-identified application from issue after payment of the issue fee.

The petition is **GRANTED**.

The above-identified application is withdrawn from issue for consideration of a submission under 37 CFR 1.114 (request for continued examination). See 37 CFR 1.313(c)(2).

Petitioner is advised that the issue fee paid on May 4, 2006 in the above-identified application cannot be refunded. If, however, the above-identified application is again allowed, petitioner may request that it be applied towards the issue fee required by the new Notice of Allowance.[1]

Telephone inquiries should be directed to Irvin Dingle at (571) 272-3210.

This matter is being referred to Technology Center AU 2623 for processing of the request for continued examination under 37 CFR 1.114 and for consideration of the concurrently filed Information Disclosure Statement.

Irvin Dingle
Petitions Examiner
Office of Petitions

---

[1] The request to apply the issue fee to the new Notice may be satisfied by completing and returning the new Issue Fee Transmittal Form PTOL-85(b), which includes the following language thereon: Commissioner for Patents is requested to apply the Issue Fee and Publication Fee (if any) or re-apply any previously paid issue fee to the application identified above. Petitioner is advised that, whether a fee is indicated as being due or not, the Issue Fee Transmittal Form **must** be completed and timely submitted to avoid abandonment. Note the language in bold text on the first page of the Notice of Allowance and Fee(s) Due (PTOL-85).

SPE: C. Kelley

SPE RESPONSE FOR CERTIFICATE OF CORRECTION

Paper No.: _____

DATE : 8/6/07

TO SPE OF : ART UNIT 2629

SUBJECT : Request for Certificate of Correction for Appl. No.: 09/772,288 Patent No.: 7159233

Please respond to this request for a certificate of correction within 7 days.

Please review the requested changes/corrections as shown in the **COCIN** document(s) in the IFW application image. No new matter should be introduced, nor should the scope or meaning of the claims be changed.

Please complete the response (see below) and forward the completed response to scanning using document code **COCX**.

Lamonte M. Newsome
Certificates of Correction Branch
703-308-9390 ext. 112

Thank You For Your Assistance

The request for issuing the above-identified correction(s) is hereby:

Note your decision on the appropriate box.

- ☒ **Approved** — All changes apply.
- ☐ **Approved in Part** — Specify below which changes do not apply.
- ☐ **Denied** — State the reasons for denial below.

Comments: _____

C. Kelley — SPE

9/17/07 — Art Unit

09/772238

Patent 7,159,233 B2

PATENT

RECEIVED
CENTRAL FAX CENTER
JUL 18 2007

IN UNITED STATES PATENT AND TRADEMARK OFFICE

Patent No.: 7,159,233 B2 Docket No: SEDN/255

Issue Date: January 2, 2007 Patentee: Yong Ho Son et al.

Title METHOD AND APPARATUS FOR PREPROCESSING AND POSTPROCESSING CONTENT IN AN INTERACTIVE INFORMATION DISTRIBUTION SYSTEM

Certificate
JUL 23 2007
of Correction

REQUEST FOR CERTIFICATE OF CORRECTION

Commissioner for Patents
P.O. Box 1450
Alexandria, VA 22313-1450

It is requested that a Certificate of Correction be issued correcting printing and other minor typographical errors appearing in the above-identified United States patent. Two copies of the text of the Certificate in the suggested form are enclosed.

Issuance of the Certificate of Correction would neither expand nor contract the scope of the claims as properly allowed, and re-examination is not required.

Please charge the certificate of correction fee, if any, and any other fees due, pursuant to 37 CFR 1.20(a), to counsel's Deposit Account No. 20-0782/SEDN/255.

Respectfully submitted,

YONG HO SON et al.

Dated: 7/18/07

E M Wall

Eamon J. Wall, Attorney, Reg. #39,414
Patterson and Sheridan, LLP
595 Shrewsbury Avenue, Suite 100
Shrewsbury, New Jersey 07702

CERTIFICATE UNDER 37 CFR § 1.8:
The undersigned hereby certifies that this correspondence is being deposited with the United States Postal Service with sufficient postage as first class mail, in an envelope addressed to: Commissioner for Patents, P.O. Box 1450 Alexandria, VA 22313-1450, on this 18 day of JULY 2007

LAURA E CRATER
Name

Laura E Crater
Signature

PLEASE ENTER

JUL 25 2007

9/13/07

3 of 6

PTO/SB/44 (02-01)
Approved for use through 01/31/2004. OMB 0651-0033
U.S. Patent and Trademark Office; U.S. DEPARTMENT OF COMMERCE
Under the Paperwork Reduction Act of 1995, no persons are required to respond to a collection of information unless it displays a valid OMB control number.

UNITED STATES PATENT AND TRADEMARK OFFICE
CERTIFICATE OF CORRECTION

PATENT NO : 7,159,233 B2

DATED : January 2, 2007

INVENTOR(S) : Yong Ho Son et al.

It is certified that error appears in the above-identified patent and that said Letters Patent is hereby corrected as shown below:

Page 1, Column 2, Item 56, U.S. Patent Documents, line 5, after "6,647,411," delete "B1" and insert instead --B2--.

Page 1, Column 2, Item 57, Abstract, line 1, after "and" delete "preprocessing" and insert instead –postprocessing–.

In the drawings, sheet 5 of 6, box 506 (FIG. 5A), delete "EMCODED?" and insert instead –ENCODED?–.

Column 2, line 62, after "System," insert –"–; line 66, delete "P" and insert instead –IP–.

Column 4, line 1, delete "RPT" and insert instead –RTP–.

Column 8, line 16, delete "e.g," and insert instead --e.g.,--.

Column 13, line 7, in claim 1, delete "a" before "first"; line 53, in claim 10, delete "a" before "request"; line 57, in claim 11, delete "am" and insert instead –are–.

Column 16, line 10, delete "internet protocol" and insert instead –Internet Protocol–.

MAILING ADDRESS OF SENDER
PATTERSON & SHERIDAN, LLP
595 Shrewsbury Avenue, Suite 100
Shrewsbury, New Jersey 07702

PATENT NO. 7,159,233 B2
No. of additional copies
additional copies

Atty Docket No: SEDN/255

JUL 25 2007

UNITED STATES DEPARTMENT OF COMMERCE
Patent and Trademark Office
ASSISTANT SECRETARY OF COMMERCE AND
COMMISSIONER OF PATENTS AND TRADEMARKS
Washington, DC 2023

August 14, 2003

Ronland Plottel
Rockfeller Center SM
PO Box 293
New York, NY 10185-0293

In re application of:
Ronland Plottel DECISION ON PETITION
Serial No.: 09/772,305
Filed: January 29, 2001
For: Device for Changing Operating Mode
For Chip Card Reader

This is a decision on the petition received on April 24, 2003, to withdraw the holding of abandonment in the above-identified application.

The above-identified application became abandoned for failure to reply within the meaning of 37 C.F.R. 1.113 in timely manner to the Notice to File Corrected Application Papers mailed on March 12, 2001. Which set a shortened statutory period for reply of two (2) months. Accordingly, this application became abandoned on May 15, 2001.

On March 24, 2003, the office received a communication from the applicant of record. Enclosed was an acknowledgement that the attorney received the filing receipt but never received the Notice to File Corrected Application Papers mailed on March 12, 2001.

The office responded to the status letter with a Cover Letter for Resending Correspondence and a copy of the Notice to File Corrected Application Papers, which was mailed on March 12, 2001. The notice did not give counsel adequate time to respond. Counsel responded to the notice on April 24, 2003. The response of April 24, 2003 will act as a timely response.

The petition is Granted.

The application has been completed for release to Technology Center 2876.

The office regrets any inconvenience this may have caused the client.

Telephone inquiries concerning this matter may be directed to Doshie E. Day (703) 308-3640.

Doshie Day

Doshie E. Day
Program Management Assistant
Office Initial Patent Examination

UNITED STATES PATENT AND TRADEMARK OFFICE

UNITED STATES DEPARTMENT OF COMMERCE
United States Patent and Trademark Office
Address: COMMISSIONER FOR PATENTS
P.O. Box 1450
Alexandria, Virginia 22313-1450
www.uspto.gov

December 9, 2003

Ronland Plottel
Rockfeller Center SM
PO Box 293
New York, NY 10185-0293

In re application of:
Ronland Plottel DECISION ON PETITION
Serial No.: 09/772,305
Filed: January 29, 2001
For: Device for Changing Operating Mode
For Chip Card Reader

Responsive to the letter received on August 25, 2003, correcting the fee requirements in the above application.

Counsel 's deposit account 16-2128 will be charged the sum of $1,430.00 for the unintentional abandonment and the surcharge.

The application has been completed and release to Technology Center 2876.

It is indeed honorable of you to correct the oversight in the above application.

Telephone inquiries concerning this matter may be directed to Doshie E. Day (703) 308-3640.

Doshie Day

Doshie E. Day
Program Management Assistant
Office Initial Patent Examination

OIPE JC102
AUG 2 5 2003
PATENT & TRADEMARK OFFICE

2876

1051 130
1453 1,300

Atty. Dkt. G-73

IN THE UNITED STATES PATENT AND TRADEMARK OFFICE

Applicant	:	Herve CUNIN
Serial No.	:	09/772,305
Filing Date	:	01/29/2001
Cnfrm. No.	:	8589
GAU	:	
Examiner	:	
For	:	Method and Device for Changing Operating Mode for Chip Card Reader

Attention: Mr. Doshie E. Day
Program Management Assistant
Office Initial Patent Examination

AUG 2 1 2003

This is in reference to the August 14, 2003 DECISION ON PETITION.

Applicant's attorney would like to clarify certain facts. The DECISION at ¶3 lines 3-4 states that "... [the attorney] never received the Notice to File Corrected Application Papers mailed on March 12, 2001." Applicant's attorney only after filing the Status Inquiry Letter on March 31, 2003, and only after receipt of the April 9, 2003 Cover Letter for Resending Correspondence (which contained a copy of the March 12, 2001 Notice), and on restudying the file during the week of April 13, 2003, located for the first time the original Notice to File Corrected Application Papers mailed on March 12, 2001. It was buried in the file and remained unnoticed until the week of April 13, 2003.

If any fee and/or petition is required for this submission, then petition is hereby made for the acceptance

and entry of this submission and the Commissioner is requested and authorized to charge deposit account 16-2128 therefor. The entire delay in filing the required reply from the due date for reply until the filing of this petition was unintentional.

Respectfully submitted,

Roland Plottel

Roland Plottel
PTO 20,707

212 489-7073

Roland Plottel
Rockefeller Center Stn.
P.O. Box 293
New York, NY 10185-0293

Certificate under 37 CFR 1.8(a): I hereby certify that this correspondence is being deposited with the United States postal service as first-class mail in an envelope addressed to: Commissioner for Patents, PO Box 1450, Alexandria VA 22313-1450 on AUG 2 1 2003

Roland Plottel

Roland Plottel

UNITED STATES PATENT AND TRADEMARK OFFICE

COMMISSIONER FOR PATENTS
UNITED STATES PATENT AND TRADEMARK OFFICE
P.O. BOX 1450
ALEXANDRIA, VA 22313-1450
www.uspto.gov

NXP, B.V.
NXP INTELLECTUAL PROPERTY DEPARTMENT
M/S41-SJ
1109 MCKAY DRIVE
SAN JOSE, CA 95131

COPY MAILED

JUL 25 2007

OFFICE OF PETITIONS

In re Application of
Saul R. Dooley
Application No. 09/772,324
Filed: January 26, 2001
Attorney Docket No. GB 000062

ON PETITION

This is a decision on the petition under 37 CFR 1.137(b) to revive the above-identified application, filed March 16, 2007.

It is noted that the person signing the instant petition is not an attorney of record in the above-identified application. However, in accordance with 37 CFR 1.34(a), the signature of Michael J. Ure appearing on the petition shall constitute a representation to the United States Patent and Trademark Office that he is authorized to represent the particular party on whose behalf he acts.

The petition is **GRANTED**.

The application became abandoned for failure to pay the issue fee on or before January 19, 2007. A Notice of Abandonment was mailed on February 16, 2007. On March 16, 2007, the present petition was filed.

The petition satisfies the requirements of 37 CFR 1.137(b) in that petitioner has supplied (1) the reply in the form of the $1,400 issue fee and the $300 publication fee; (2) the petition fee of $1,500; and (3) an adequate statement of unintentional delay.

The application is being referred to the Office of Publications to be processed into a patent.

Telephone inquires related to this decision should be directed to the undersigned at (571) 272-3204. Telephone inquiries related to processing at Publishing Division should be directed to (571) 272-4200.

Sherry D. Brinkley
Petitions Examiner
Office of Petitions

UNITED STATES DEPARTMENT OF COMMERCE
Patent and Trademark Office
ASSISTANT SECRETARY OF COMMERCE AND
COMMISSIONER OF PATENTS AND TRADEMARKS
Washington, DC 2023

May 19, 2003

Rory J. Radding
Pennie & Edmonds
1155 Avenue of the Americas
New York, NY 10036-2711

In re application of:
Carlos D. Fear DECISION ON PETITION
Serial No.: 09/772,330
Filed: January 29, 2001
For: BLACKBERRY PLANT NAMED "SONOMA"

This is a decision on the petitions received on March 20, 2003, to withdraw the holding of abandonment in the above-identified application.

The above-identified application became abandoned for failure to reply within the meaning of 37 C.F.R. 1.113 in timely manner to the Notice to File Missing Parts of Application mailed March 6, 2001. Which set a shortened statutory period for reply of two (2) months. Accordingly, this application became abandoned May 8, 2001. The Notice of Abandonment was mailed on March 11, 2003.

On March 20, 2003, the office received a communication from the attorney of record. Enclosed was an acknowledgement that the attorney responded to the Notice of Missing Parts on May 7, 2001.

The evidence submitted is sufficient to establish that the petitioners responded to the Notice of Missing Parts on May 7, 200l.

The petition is hereby Granted.

The application has been completed for release to Technology Center 1661.

The office regrets any inconvenience this may have caused the client.

Telephone inquiries concerning this matter may be directed to Doshie E. Day (703) 308-3640.

Doshie Day

Doshie E. Day
Program Management Assistant
Office Initial Patent Examination

SPE RESPONSE FOR CERTIFICATE OF CORRECTION

Paper No.: _____

DATE : 5-15-09

TO SPE OF : ART UNIT 2136

SUBJECT : Request for Certificate of Correction for Appl. No.: 09/772347 Patent No.: 7310733

Please respond to this request for a certificate of correction within 7 days.

FOR IFW FILES: Should COC be Approved

Please review the requested changes/corrections as shown in the **COCIN** document(s) in the IFW application image. No new matter should be introduced; nor should the scope or meaning of the claims be changed.

Please complete the response (see below) and forward the completed response to scanning using document code **COCX**.

FOR PAPER FILES:

Please review the requested changes/corrections as shown in the attached certificate of correction. Please complete this form (see below) and forward it with the file to:

Certificates of Correction Branch (C of C)
Randolph Square 9C62-D
Palm Location 7580

Ennis Young
Certificates of Correction Branch
703-756-1542

Thank You For Your Assistance

The request for issuing the above-identified correction(s) is hereby:
Note your decision on the appropriate box.

- ☒ **Approved** — **All** changes apply.
- ☐ **Approved in Part** — Specify below which changes **do not** apply.
- ☐ **Denied** — State the reasons for denial below.

Comments: _____

/Nasser Moazzami/ — **SPE**

2436 — **Art Unit**

UNITED STATES PATENT AND TRADEMARK OFFICE

MAILED

APR 23 2002

DIRECTOR'S OFFICE
TECHNOLOGY CENTER 2100

Commissioner for Patents
United States Patent and Trademark Office
Washington, D.C. 20231
www.uspto.gov

Paper No. 6

Joseph P. Kincart
Clifford Chance Rogers & Wells LLP
200 Park Avenue
New York, NY 10166-0153

In re Application of: David Lawrence	)	
Application No. 09/772,427	)	**DECISION ON PETITION FOR**
Filed: January 30, 2001	)	**ACCELERATED EXAMINATION**
For: AUTOMATED POLITICAL RISK	)	**UNDER M.P.E.P. §708.02(VIII)**
MANAGEMENT	)	

This is a decision on the petition to make special filed December 7, 2001. In light of the content of the petition, it will be treated first in view of M.P.E.P. §708.02(XI): Inventions For Countering Terrorism, and then M.P.E.P. §708.02(VIII) Accelerated Examination.

M.P.E.P. §708.02 (XI), which sets out the prerequisites for a grantable petition for Inventions For Countering Terrorism under 37 C.F.R. § 1.102(d), states in relevant part:

> International terrorism as defined in 18 U.S.C. 2331 includes "activities that - (A) involve violent acts or acts dangerous to human life that are a violation of the criminal laws of the United States or of any State, or that would be a criminal violation if committed within the jurisdiction of the United States or of any State; [and] (B) appear to be intended - (i) to intimidate or coerce a civilian population; (ii) to influence the policy of a government by intimidation or coercion; or (iii) to affect the conduct of a government by assassination or kidnapping..." The types of technology for countering terrorism could include, but are not limited to, systems for detecting/identifying explosives, aircraft sensors/security systems, and vehicular barricades/disabling systems.
>
> Applicants who desire that an application relating to inventions for countering terrorism be made special should file a petition with the petition fee under 37 CFR 1.17(h) requesting the Patent and Trademark Office to make the application special. The petition for special status should be accompanied by a statement explaining how the invention contributes to countering terrorism.

Petitioner's submission fails to meet the criteria set out with respect to countering terrorism in M.P.E.P. §708.02(XI). The claimed invention is generally directed to managing risk related to financial transactions involving a politically identified person which does not directly relate to countering violent acts or acts dangerous to human life intended to intimidate a population or influence the policy or conduct of a government. While applicant indicates that the invention could be related to national security, this does not persuasively establish that the invention represents an advancement in the field of countering terrorism.

M.P.E.P. §708.02, Section VIII which sets out the prerequisites for a grantable petition for Accelerated Examination under 37 C.F.R. §1.102(d) states in relevant part:

A new application (one which has not received any examination by the examiner) may be granted special status provided that applicant (and this term includes applicant's attorney or agent) complies with each of the following items:

(a) Submits a petition to make special accompanied by the fee set forth in 37 CFR 1.17(i);

(b) Presents all claims directed to a single invention, ...

(c) Submits a statement(s) that a pre - examination search was made, ***listing the field of search by class and subclass,*** publication, Chemical Abstracts, foreign patents, etc. A search made by a foreign patent office satisfies this requirement;

(d) Submits one copy each of the references deemed most closely related to the subject matter encompassed by the claims if said references are not already of record; and

(e) Submits a detailed discussion of the references, which discussion points out, with the particularity required by 37 CFR 1.111(b) and (c), how the claimed subject matter is patentable over the references.

In those instances where the request for this special status does not meet all the prerequisites set forth above, ***applicant will be notified and the defects in the request will be stated.*** The application will remain in the status of a new application awaiting action in its regular turn. In those instances where a request is defective in one or more respects, applicant will be given one opportunity to perfect the request in a renewed petition to make special. If perfected, the request will then be granted. If not perfected in the first renewed petition, any additional renewed petitions to make special may or may not be considered at the discretion of the Group Special Program Examiner.

Applicant's submission is deficient in that there is no detailed discussion of the references as required by section (e) to the extent required by 37 CFR 1.111(b) and (c). Applicant's submission merely generalizes each reference accompanied by a statement that the particular reference does not include the features of the invention. A one or two line summarization of the reference does not satisfy the requirement, as it does not provide a ***detailed discussion*** of the references. Furthermore, the discussion of the claimed subject matter asserts that the references do not "address the broader legal, regulatory, and reputational risk associated with a financial account held by a politically identified person, nor [do the references] provide an indicator of the level of risk associated with such an account". However, claims 1, 16, and 20-22, for example, do not recite the type of risk argued, i.e. legal, regulatory, and reputational risk. Further assertions concerning the scope of the claim language are set forth on page 5 of the submission, but these assertions do not appear to be supported by the language of the independent claims. The assertions made with regard to the references do not match the scope of the independent claims and therefore the submission does not point out how the ***claimed subject matter is patentable over the references***.

Furthermore, since the "Statement of Field of Search" and the "Discussion of References" are a part of the Petition to Make Special, these sections of the petition should be placed above the signature of the person signing the petition.

Accordingly, the petition is **DISMISSED**. The application file is being forwarded to Central Files to await examination in its proper turn based on its effective filing date.

Any request for reconsideration must be filed within TWO MONTHS of the mailing date of this decision.

Pinchus M. Laufer
Special Programs Examiner
Technology Center 2100
Computer Architecture, Software, and Electronic Commerce
(703) 306-4160

UNITED STATES PATENT AND TRADEMARK OFFICE

UNDER SECRETARY OF COMMERCE FOR INTELLECTUAL PROPERTY AND
DIRECTOR OF THE UNITED STATES PATENT AND TRADEMARK OFFICE
WASHINGTON, DC 20231
www.uspto.gov

MAILED

AUG 0 8 2002

DIRECTOR'S OFFICE
TECHNOLOGY CENTER 3600

Clifford, Chance, Rogers & Wells LLP
200 Park Avenue
New York, NY 10166-0153

Paper No. 8

In re application of
David Lawrence
Application No. 09/772,427
Filed: January 30, 2001
For: AUTOMATED POLITICAL RISK MANAGEMENT

: **DECISION ON PETITION**
: **TO MAKE SPECIAL**
: **(ACCELERATED EXAMINATION)**

This is in response to the renewed petition filed on June 28, 2002 to make the above-identified application special on the basis of special examining procedure for certain new applications - accelerated examination as set forth in MPEP § 708.02 VIII.

The requirements for granting special status under this section are: (A) a petition to make special accompanied by the fee set forth in 37 CFR 1.17(i); (B) all claims being directed to a single invention, or an election without traverse if the Office determines that all the claims are not directed to a single invention; (C) a statement that a pre-examination search was made listing the field of search; (D) one copy of each of the references deemed most closely related to the subject matter encompassed by the claims if said references are not already of record; and (E) a detailed discussion of how the claimed subject matter is patentable over the references.

Since all of the requirements for special status under MPEP § 708.02 VIII have been met, the petition is **GRANTED**.

The examiner is directed (1) to make an interference search for possible interfering applications, (2) to promptly examine this application out of turn, and (3) if any interfering application is discovered, to examine such application simultaneously and state in the first official letter of such application that it is being taken out of turn because of a possible interference.

Petitioner is advised that this application will continue to be special, throughout its entire prosecution and pendency, including interference or appeal, if any, only if petitioner makes a prompt ***bona fide*** effort, in response to each Office action, to place the application in condition for allowance, even if it is necessary to conduct an interview with the examiner to accomplish this purpose.

SUMMARY: Petition to Make Special **GRANTED**.

Steven N. Meyers
Special Programs Examiner
Technology Center 3600
(703) 308-3868

SNM: 8/4/02

UNITED STATES PATENT AND TRADEMARK OFFICE

Commissioner for Patents
United States Patent and Trademark Office
P.O. Box 1450
Alexandria, VA 22313-1450
www.uspto.gov

ROTHWELL FIGG ERNST & MANBECK PC
1425 K ST NW
SUITE 800
WASHINGTON DC 20005

COPY MAILED

FEB 05 2007

OFFICE OF PETITIONS

In re Application of Kleinman, et al. Application No. 09/772,445 Filed: January 29, 2001 Attorney Docket No. 2600-109	: : : : :	DECISION ON PETITION

This is a decision on the petition under 37 CFR 1.78(a)(3), filed February 7, 2006, to accept an unintentionally delayed claim under 35 U.S.C. § 120 for the benefit of priority to the prior-filed applications set forth in the concurrently filed ADS.

The petition is **GRANTED**.

A petition for acceptance of a claim for late priority under 37 CFR 1.78(a)(3) is only applicable to those applications filed on or after November 29, 2000. Further, the petition is appropriate only after the expiration of the period specified in 37 CFR 1.78(a)(2)(ii). In addition, the petition under 37 CFR 1.78(a)(3) must be accompanied by:

(1) the reference required by 35 U.S.C. § 120 and 37 CFR 1.78(a)(2)(i) of the prior-filed application, unless previously submitted;

(2) the surcharge set forth in § 1.17(t); and

(3) a statement that the entire delay between the date the claim was due under 37 CFR 1.78(a)(2)(ii) and the date the claim was filed was unintentional. The Commissioner may require additional information where there is a question whether the delay was unintentional.

The instant nonprovisional application was filed after November 29, 2000, and the claim herein for the benefit of priority to the prior applications is submitted after expiration of the period specified in 37 CFR 1.78(a)(2)(ii).

The petition complies with the requirements for a grantable petition under 37 CFR 1.78(a)(3) in that (1) a reference to the above-noted, prior-filed applications have been included in an ADS; (2) the surcharge fee required by 37 CFR 1.17(t) has been submitted; and (3) the petition contains a proper statement of unintentional delay. Accordingly, having found that the instant petition for acceptance of an unintentionally delayed claim for the benefit of priority under 35 U.S.C. §§ 120 and 365(c) to the prior-filed applications satisfies the conditions of 37 CFR 1.78(a)(3), the petition is granted.

The granting of the petition to accept the delayed benefit claim to the prior-filed applications under 37 CFR 1.78(a)(3) should not be construed as meaning that the instant application is entitled to the benefit of the prior-filed applications. In order for the instant application to be entitled to the benefit of the prior-filed applications, all other requirements under 35 U.S.C. §§ 120 and 365(c) and 37 CFR 1.78(a)(1) and (a)(2) must be met. Similarly, the fact that the corrected Filing Receipt accompanying this decision on petition includes the prior-filed applications should not be construed as meaning that applicant is entitled to the claim for benefit of priority to the prior-filed applications noted thereon. Accordingly, the examiner will, in due course, consider this benefit claim and determine whether the instant application is entitled to the benefit of the earlier filing date.

A corrected Filing Receipt, which includes the priority claim to the prior-filed nonprovisional applications, accompanies this decision on petition.

Receipt of the $1,370 petition fee is acknowledged.

Any questions concerning this decision on petition may be directed to Petitions Attorney Cliff Congo at (571)272-3207. All other inquiries concerning either the examination procedures or status of the application should be directed to the Technology Center.

The application is being referred to Technology Center AU 1654 for consideration by the examiner of applicant's entitlement to claim benefit of priority under 35 U.S.C. §120 to the prior-filed applications.

Charles Steven Brantley
Senior Petitions Attorney
Office of Petitions

Enc: Corrected Filing Receipt (3 pages)

UNITED STATES PATENT AND TRADEMARK OFFICE

UNITED STATES DEPARTMENT OF COMMERCE
United States Patent and Trademark Office
Address: COMMISSIONER FOR PATENTS
P.O. Box 1450
Alexandria, Virginia 22313-1450
www.uspto.gov

APPL NO.	FILING OR 371 (c) DATE	ART UNIT	FIL FEE REC'D	ATTY.DOCKET NO	DRAWINGS	TOT CLMS	IND CLMS
09/772,445	01/29/2001	1654	4150	2600-109	11	128	8

CONFIRMATION NO. 1045
CORRECTED FILING RECEIPT
OC000000021282853
OC000000021282853

6449
ROTHWELL, FIGG, ERNST & MANBECK, P.C.
1425 K STREET, N.W.
SUITE 800
WASHINGTON, DC 20005

Date Mailed: 01/29/2007

Receipt is acknowledged of this regular Patent Application. It will be considered in its order and you will be notified as to the results of the examination. Be sure to provide the U.S. APPLICATION NUMBER, FILING DATE, NAME OF APPLICANT, and TITLE OF INVENTION when inquiring about this application. Fees transmitted by check or draft are subject to collection. Please verify the accuracy of the data presented on this receipt. **If an error is noted on this Filing Receipt, please mail to the Commissioner for Patents P.O. Box 1450 Alexandria Va 22313-1450. Please provide a copy of this Filing Receipt with the changes noted thereon. If you received a "Notice to File Missing Parts" for this application, please submit any corrections to this Filing Receipt with your reply to the Notice. When the USPTO processes the reply to the Notice, the USPTO will generate another Filing Receipt incorporating the requested corrections (if appropriate).**

Applicant(s)

Hynda K. Kleinman, Kensington, MD;
Allan L. Goldstein, Washington, DC;
Katherine M. Malinda, Millersville, MD;
Gabriel Sosne, Oak Park, MI;

Power of Attorney: The patent practitioners associated with Customer Number **6449**.

Domestic Priority data as claimed by applicant

This application is a CON of PCT/US99/17282 07/29/1999
which claims benefit of 60/094,690 07/30/1998

Foreign Applications

If Required, Foreign Filing License Granted: 08/23/2002

The country code and number of your priority application, to be used for filing abroad under the Paris Convention, is
US09/772,445

Projected Publication Date: Not Applicable

Non-Publication Request: No

Early Publication Request: No

Title

Compositions and methods for promoting wound healing and tissue repair

Preliminary Class

514

PROTECTING YOUR INVENTION OUTSIDE THE UNITED STATES

Since the rights granted by a U.S. patent extend only throughout the territory of the United States and have no effect in a foreign country, an inventor who wishes patent protection in another country must apply for a patent in a specific country or in regional patent offices. Applicants may wish to consider the filing of an international application under the Patent Cooperation Treaty (PCT). An international (PCT) application generally has the same effect as a regular national patent application in each PCT-member country. The PCT process **simplifies** the filing of patent applications on the same invention in member countries, but **does not result** in a grant of "an international patent" and does not eliminate the need of applicants to file additional documents and fees in countries where patent protection is desired.

Almost every country has its own patent law, and a person desiring a patent in a particular country must make an application for patent in that country in accordance with its particular laws. Since the laws of many countries differ in various respects from the patent law of the United States, applicants are advised to seek guidance from specific foreign countries to ensure that patent rights are not lost prematurely.

Applicants also are advised that in the case of inventions made in the United States, the Director of the USPTO must issue a license before applicants can apply for a patent in a foreign country. The filing of a U.S. patent application serves as a request for a foreign filing license. The application's filing receipt contains further information and guidance as to the status of applicant's license for foreign filing.

Applicants may wish to consult the USPTO booklet, "General Information Concerning Patents" (specifically, the section entitled "Treaties and Foreign Patents") for more information on timeframes and deadlines for filing foreign patent applications. The guide is available either by contacting the USPTO Contact Center at 800-786-9199, or it can be viewed on the USPTO website at http://www.uspto.gov/web/offices/pac/doc/general/index.html.

For information on preventing theft of your intellectual property (patents, trademarks and copyrights), you may wish to consult the U.S. Government website, http://www.stopfakes.gov. Part of a Department of Commerce initiative, this website includes self-help "toolkits" giving innovators guidance on how to protect intellectual property in specific countries such as China, Korea and Mexico. For questions regarding patent enforcement issues, applicants may call the U.S. Government hotline at 1-866-999-HALT (1-866-999-4158).

LICENSE FOR FOREIGN FILING UNDER
Title 35, United States Code, Section 184
Title 37, Code of Federal Regulations, 5.11 & 5.15

GRANTED

The applicant has been granted a license under 35 U.S.C. 184, if the phrase "IF REQUIRED, FOREIGN FILING LICENSE GRANTED" followed by a date appears on this form. Such licenses are issued in all applications where the conditions for issuance of a license have been met, regardless of whether or not a license may be required as set forth in 37 CFR 5.15. The scope and limitations of this license are set forth in 37 CFR 5.15(a) unless an earlier license has been issued under 37 CFR 5.15 (b). The license is subject to revocation upon written notification. The date indicated is the effective date of the license, unless an earlier license of similar scope has been granted under 37 CFR 5.13 or 5.14.

This license is to be retained by the licensee and may be used at any time on or after the effective date thereof unless it is revoked. This license is automatically transferred to any related applications(s) filed under 37 CFR 1.53(d). This license is not retroactive.

The grant of a license does not in any way lessen the responsibility of a licensee for the security of the subject matter as imposed by any Government contract or the provisions of existing laws relating to espionage and the national security or the export of technical data. Licensees should apprise themselves of current regulations especially with respect to certain countries, of other agencies, particularly the Office of Defense Trade Controls, Department of State (with respect to Arms, Munitions and Implements of War (22 CFR 121-128)); the Bureau of Industry and Security, Department of Commerce (15 CFR parts 730-774); the Office of Foreign Assets Control, Department of Treasury (31 CFR Parts 500+) and the Department of Energy.

NOT GRANTED

No license under 35 U.S.C. 184 has been granted at this time, if the phrase "IF REQUIRED, FOREIGN FILING LICENSE GRANTED" DOES NOT appear on this form. Applicant may still petition for a license under 37 CFR 5.12, if a license is desired before the expiration of 6 months from the filing date of the application. If 6 months has lapsed from the filing date of this application and the licensee has not received any indication of a secrecy order under 35 U.S.C. 181, the licensee may foreign file the application pursuant to 37 CFR 5.15(b).

UNITED STATES PATENT AND TRADEMARK OFFICE

Commissioner for Patents
United States Patent and Trademark Office
P.O. Box 1450
Alexandria, VA 22313-1450
www.uspto.gov

Scully, Scott, Murphy & Presser
400 Garden City Plaza
Garden City, NY 11530

COPY MAILED

AUG 18 2006

OFFICE OF PETITIONS

In re Application of
GORDON, et al.
Application No. 09/772,460
Filed: January 30, 2001
Attorney Docket No. 14244

DECISION ON PETITION
TO WITHDRAW
FROM RECORD

This is a decision on the Request to Withdraw as attorney or agent of record under 37 C.F.R. § 1.36(b), filed May 8, 2006.

The request is **NOT APPROVED** as moot.

A review of the file record indicates that the power of attorney to Paul J. Esatto Jr. has been revoked by the assignee of the patent application on May 8, 2006. Accordingly, the request to withdraw under 37 C.F.R. § 1.36(b) is moot.

All future communications from the Office will continue to be directed to the below-listed address until otherwise notified by applicant.

Telephone inquires concerning this decision should be directed to Monica A. Graves at 571-272-7253.

Amelia Au
Petitions Examiner
Office of Petitions

cc: **Kenyon & Kenyon LLP**
One Broadway
New York, NY 10004

UNITED STATES PATENT AND TRADEMARK OFFICE

Commissioner for Patents
United States Patent and Trademark Office
Washington, D.C. 20231
www.uspto.gov
DIW 10-01

Paper No. 3

CORPORATE PATENT COUNSEL
U.S. PHILIPS CORPORATION
580 WHITE PLAINS ROAD
TARRYTOWN, NY 10591

COPY MAILED

OCT 1 5 2001

OFFICE OF PETITIONS

In re Application of	:
Daniel Pelletier	: DECISION DISMISSING
Application No. 09/772,484	: PETITION
Filed: 29 January, 2001	:
Attorney Docket No. US010008	:

This is a decision in reference to the letter filed on 17 September, 2001, which is treated as a petition under 37 CFR 1.10(c) requesting that the above-identified application be accorded a filing date of 30 January, 2001, rather than the presently accorded filing date of 29 January, 2001.

Petitioner asserts that the application was deposited in Express Mail service on 30 January, 2001.

Paragraph (c) of 37 CFR 1.10 states that:

Any person filing correspondence under 37 CFR 1.10 that was received by the Office and delivered by the "Express Mail Post Office to Addressee" service of the USPS, who can show a discrepancy between the filing date accorded by the Office to the correspondence and the date of deposit as shown by the "date-in" on the "Express Mail" mailing label or other USPS notation, may petition the Commissioner to accord the correspondence a filing date as of the "date-in" on the "Express Mail" mailing label or other official USPS notation, provided that:

(1) The petition is filed promptly after the person becomes aware that the Office has accorded, or will accord, a filing date other than the USPS deposit date;

(2) The number of the "Express Mail" mailing label was placed on the papers or fees that constitute the correspondence prior to the original mailing by "Express Mail;" and

(3) The petition includes a true copy of the "Express Mail" mailing label showing the "date-in," and of any other official notation by the USPS relied upon to show the date of deposit.

The instant petition lacks the showing required by items (1) and (3).

In regards to item (1), above, petitioner did not file the instant petition until over three months after the mailing date of the Filing Receipt showing the purportedly incorrect filing date. As the showing of record indicates a lack of diligence, petitioner must explain in detail, in its renewed petition, why the instant petition should not be dismissed out of hand as untimely.

In regards to item (3), above, petitioner has not supplied a true copy of the Express Mail mailing label showing the date-in or other official USPS notation. Any renewed petition must include a true copy of the Express Mail mailing label. The only documents presented by petitioner in support of the petition are a copy of the itemized application transmittal sheet, containing the Express Mail label number and a "Certificate of Express Mailing," which was sent with the original application papers and an itemized postcard receipt bearing an "Office date" of 29 January, 2001. Petitioner should also note that the requirement of 37 CFR 1.10(c) for a certificate of mailing by "Express Mail" has been waived by the Commissioner.[1] Thus, the certificate of mailing by "Express Mail" does not serve as evidence of the date of mailing.

The application is being forwarded to Technology Center 2600 for further processing with a filing date of 29 January, 2001.

Telephone inquiries specific to this matter should be directed to the undersigned at (703) 308-6918.

D Wood

Douglas I. Wood
Petitions Attorney
Office of Petitions
Office of the Deputy Commissioner
for Patent Examination Policy

---

[1] See 1174 O.G. Pat. Of. 92 (May 16, 1995).

UNITED STATES PATENT AND TRADEMARK OFFICE

COMMISSIONER FOR PATENTS
UNITED STATES PATENT AND TRADEMARK OFFICE
P.O. BOX 1450
ALEXANDRIA, VA 22313-1450
www.uspto.gov

MAIL Paper No. 9

NOV 17 2004

DIRECTOR OFFICE
TECHNOLOGY CENTER 2600

JOHN P. O'BANION
O'BANION & RITCHEY LLP
400 CAPITOL MALL SUITE 1550
SACRAMENTO CA 95814

In re Application of:
Gee-Kung-CHANG, et al.
Application No. 09/772,502
Filed: January 30, 2001
For: OPTICAL LAYER MULTICASTING USING A SINGLE SUB-CARRIER HEADER AND A MULTICAST SWITCH WITH ACTIVE HEADER INSERTION

DECISION ON PETITION

This is a response to the request for withdrawal of the notice of abandonment, filed October 18, 2004. The petition is being treated under 37 CFR 1.8(b) to withdraw the holding of abandonment.

*The petition is **granted**.*

This application became abandoned for failure to timely file a response to the Office action mailed October 6, 2003, which set a shortened statutory period of three (3) months to reply. A Notice of Abandonment was mailed on October 19, 2004.

Petitioner alleges to have timely filed a response to the Office action on January 6, 2004. To support this position, Petitioner has included with the instant petition a copy of the response bearing a proper certificate of facsimile transmission with a transmission date of January 6, 2004. Also included with the petition is a copy of an Auto-Reply Facsimile Transmission indicating that a 28 page document from Petitioner was received in the U.S. Patent and Trademark Office on January 6, 2004.

37 C.F.R. § 1.8(b) states that in the event that correspondence is considered timely filed by being mailed or transmitted in accordance with paragraph (a) of this section, but not received in the Patent and Trademark Office, and the application is held to be abandoned or the proceeding dismissed, terminated, or decided with prejudice, the correspondence will be considered timely if the party who forwarded such correspondence:

(1) Informs the Office of the previous mailing or transmission of the correspondence promptly after becoming aware that the Office has no evidence of receipt of the correspondence,

(2) Supplies an additional copy of the previously mailed or transmitted correspondence and certificate, and

(3) Includes a statement which attests on a personal knowledge basis or to the satisfaction of the Commissioner to the previous timely mailing or transmission. If the correspondence was sent by facsimile transmission, a copy of the sending unit's report confirming transmission may be used to support this statement.

Petitioner has met the requirements above. Accordingly, the Notice of Abandonment is vacated and the holding of abandonment withdrawn.

The application will be forwarded to the Technology Center's technical support staff for entry of the response. From there, the file will be forwarded to the examiner for consideration in due course.

Kenneth A. Wieder
Special Program Examiner
Technology Center 2600
Communications

SPE RESPONSE FOR CERTIFICATE OF CORRECTION

Paper No.: X

DATE : November 07,2007

TO SPE OF : ART UNIT 3637

SUBJECT : Request for Certificate of Correction for Appl. No.: 09/772,547 Patent No.: 6546686 B2

A response is requested with respect to a request for a certificate of correction.

With respect to the change(s) requested to correct Office and/or Applicant's errors, should the patent read as shown in the certificate of correction attached herewith or the COCIN document(s), in IFW images for the above-identified patented application? No new matter should be introduced, nor should the scope or meaning of the claims be changed.

If the response is for an IFW, within 7 days, please complete and forward the response, to the employee (named below) via scanning into application images, using document code **COCX**.

DO NOT SENT TO ATTORNEY

If the response is for a paper file wrapper, please complete the response and forward the response with the paper file wrapper, to the employee (named below), within 7 days, to:

Certificates of Correction Branch (CofC)
South Tower - 9A22
Palm Location 7580

You can fax the Directors/SPE response to 571-270-9990

LAMONTE

NEWSOME

Certificates of Correction Branch

703-308-9390 ext. 112

Thank You For Your Assistance

The request for issuing the above-identified correction(s) is hereby:

Note your decision on the appropriate box.

- ☒ **Approved** — **All** changes apply.
- ☐ **Approved in Part** — Specify below which changes **do not** apply.
- ☐ **Denied** — State the reasons for denial below.

Comments: _____

RICHARD E. CHILCOTT
SUPERVISORY PATENT EXAMINER

11/07/2007

Under the Paperwork Reduction Act of 1995, no persons are required to respond to a collection of information unless it displays valid OMB control number.

PETITION TO ACCEPT UNINTENTIONALLY DELAYED PAYMENT OF MAINTENANCE FEE IN AN EXPIRED PATENT (37 CFR 1.378(c))

Patent Number	Issue Date (YYYY-MM-DD)	Application Number	Filing Date (YYYY-MM-DD)	Docket Number (if applicable)
6,678,546	2004-01-13	09/772,558	2001-01-30	1166/75617

CAUTION: Maintenance fee (and surcharge, if any) payment must correctly identify: (1) the patent number and (2) the application number of the actual U.S. application leading to issuance of that patent to ensure the fee(s) is/are associated with the correct patent. 37 CFR 1.366(c) and (d).

SMALL ENTITY
☐ Patentee claims, or has previously claimed, small entity status. See 37 CFR 1.27.

LOSS OF ENTITLEMENT TO SMALL ENTITY STATUS
☒ Patentee is no longer entitled to small entity status. See 37 CFR 1.27(g)

NOT Small Entity		Small Entity	
Fee	Code	Fee	Code
◉ 3 ½ year	(1551)	○ 3 ½ year	(2551)
○ 7 ½ year	(1552)	○ 7 ½ year	(2552)
○ 11 ½ year	(1553)	○ 11 ½ year	(2553)

SURCHARGE
The surcharge required by 37 CFR 1.20(i)(2) (Fee Code 1558) must be paid as a condition of accepting unintentionally delayed payment of the maintenance fee.

MAINTENANCE FEE (37 CFR 1.20(e)-(g))
The appropriate maintenance fee must be submitted with this petition.

STATEMENT
THE UNDERSIGNED CERTIFIES THAT THE DELAY IN PAYMENT OF THE MAINTENANCE FEE TO THIS PATENT WAS UNINTENTIONAL

PETITIONER(S) REQUEST THAT THE DELAYED PAYMENT OF THE MAINTENANCE FEE BE ACCEPTED AND THE PATENT REINSTATED

THIS PORTION MUST BE COMPLETED BY THE SIGNATORY OR SIGNATORIES

37 CFR 1.378(d) states: "Any petition under this section must be signed by an attorney or agent registered to practice before the Patent and Trademark Office, or by the patentee, the assignee, or other party in interest."

I certify, in accordance with 37 CFR 1.4(d)(4) that I am

◉ An attorney or agent registered to practice before the Patent and Trademark Office

○ A sole patentee

○ A joint patentee; I certify that I am authorized to sign this submission on behalf of all the other patentees.

○ A joint patentee; all of whom are signing this e-petition

○ The assignee of record of the entire interest

Patent Practitioner			
A signature of the applicant or representative is required in accordance with 37 CFR 1.33 and 10.18. Please see 37 CFR 1.4(d) for the form of the signature			
Signature	/Paul Teng/	Date (YYYY-MM-DD)	2008-04-23
Name	Paul Teng	Registration Number	40837

This collection of information is required by 37 CFR 1.378(c). The information is required to obtain or retain a benefit by the public which is to file (and by the USPTO to process) an application. Confidentiality is governed by 35 U.S.C. 122 and 37 CFR 1.11 and 1.14. This collection is estimated to take 1 hour to complete, including gathering, preparing, and submitting the completed application form to the USPTO. Time will vary depending upon the individual case. Any comments on the amount of time you require to complete this form and/ or suggestions for reducing this burden, should be sent to the Chief Information Officer, U.S. Patent and Trademark Office, U.S. Department of Commerce, P.O. Box 1450, Alexandria, VA 22313-1450. DO NOT SEND FEES OR COMPLETED FORMS TO THIS ADDRESS. **This form can only be used when in conjunction with EFS-Web. If this form is mailed to the USPTO, it may cause delays in reinstating the patent.**

Privacy Act Statement

The Privacy Act of 1974 (P.L. 93-579) requires that you be given certain information in connection with your submission of the attached form related to a patent application or patent. Accordingly, pursuant to the requirements of the Act, please be advised that: (1) the general authority for the collection of this information is 35 U.S.C. 2(b)(2); (2) furnishing of the information solicited is voluntary; and (3) the principal purpose for which the information is used by the U.S. Patent and Trademark Office is to process and/or examine your submission related to a patent application or patent. If you do not furnish the requested information, the U.S. Patent and Trademark Office may not be able to process and/or examine your submission, which may result in termination of proceedings or abandonment of the application or expiration of the patent.

The information provided by you in this form will be subject to the following routine uses:

1. The information on this form will be treated confidentially to the extent allowed under the Freedom of Information Act (5 U.S.C. 552) and the Privacy Act (5 U.S.C. 552a). Records from this system of records may be disclosed to the Department of Justice to determine whether the Freedom of Information Act requires disclosure of these record s.

2. A record from this system of records may be disclosed, as a routine use, in the course of presenting evidence to a court, magistrate, or administrative tribunal, including disclosures to opposing counsel in the course of settlement negotiations.

3. A record in this system of records may be disclosed, as a routine use, to a Member of Congress submitting a request involving an individual, to whom the record pertains, when the individual has requested assistance from the Member with respect to the subject matter of the record.

4. A record in this system of records may be disclosed, as a routine use, to a contractor of the Agency having need for the information in order to perform a contract. Recipients of information shall be required to comply with the requirements of the Privacy Act of 1974, as amended, pursuant to 5 U.S.C. 552a(m).

5. A record related to an International Application filed under the Patent Cooperation Treaty in this system of records may be disclosed, as a routine use, to the International Bureau of the World Intellectual Property Organization, pursuant to the Patent Cooperation Treaty.

6. A record in this system of records may be disclosed, as a routine use, to another federal agency for purposes of National Security review (35 U.S.C. 181) and for review pursuant to the Atomic Energy Act (42 U.S.C. 218(c)).

7. A record from this system of records may be disclosed, as a routine use, to the Administrator, General Services, or his/her designee, during an inspection of records conducted by GSA as part of that agency's responsibility to recommend improvements in records management practices and programs, under authority of 44 U.S.C. 2904 and 2906. Such disclosure shall be made in accordance with the GSA regulations governing inspection of records for this purpose, and any other relevant (i.e., GSA or Commerce) directive. Such disclosure shall not be used to make determinations about individuals.

8. A record from this system of records may be disclosed, as a routine use, to the public after either publication of the application pursuant to 35 U.S.C. 122(b) or issuance of a patent pursuant to 35 U.S.C. 151. Further, a record may be disclosed, subject to the limitations of 37 CFR 1.14, as a routine use, to the public if the record was filed in an application which became abandoned or in which the proceedings were terminated and which application is referenced by either a published application, an application open to public inspections or an issued patent.

9. A record from this system of records may be disclosed, as a routine use, to a Federal, State, or local law enforcement agency, if the USPTO becomes aware of a violation or potential violation of law or regulation.

UNITED STATES PATENT AND TRADEMARK OFFICE

Commissioner for Patents
United States Patent and Trademark Office
P.O. Box 1450
Alexandria, VA 22313-1450
www.uspto.gov

In re Patent No. 6678546
Issue Date: January 13,2004
Application No. 09772558
Filed: January 30,2001
Attorney Docket No. 41905-01290

:
:DECISION GRANTING PETITION
:UNDER 37 CFR 1.378(c)
:

This is a decision on the electronic petition, filed April 23,2008 ,under 37 CFR 1.378(c) to accept the unintentionally delayed payment of the 3.5 year maintenance fee for the above-identified patent.

The petition is GRANTED.

The maintenance fee is accepted, and the above-identified patent reinstated as of April 23,2008 . This decision also constitutes notice that the fee has been accepted. An electronic copy of the petition and this decision has been created as an entry in an Image File Wrapper. Nevertheless, petitioner should print and retain an independent copy

Telephone inquires related to this electronic decision should be directed to the Electronic Business Center at 1-866-217-9197.

UNITED STATES PATENT AND TRADEMARK OFFICE

Commissioner for Patents
United States Patent and Trademark Office
P.O. Box 1450
Alexandria, VA 22313-1450
www.uspto.gov

Darby & Darby, P.C.
P.O. Box 5257
New York, NY 10150-5257

COPY MAILED

NOV 1 8 2004

OFFICE OF PETITIONS

In re Patent No. 6,816,876 :
Issue Date: November 9, 2004 :
Application No. 09/772,581 : NOTICE
Filed: January 29, 2001 :
Attorney Docket No. 04303/100N34-US1 :

This is a notice regarding your request for acceptance of a fee deficiency submission under 37 CFR 1.28. On September 1, 1998, the Court of Appeals for the Federal Circuit held that 37 CFR 1.28(c) is the sole provision governing the time for correction of the erroneous payment of the issue fee as a small entity. **See DH Technology v. Synergystex International, Inc. 154 F.3d 1333, 47 USPQ2d 1865 (Fed. Cir. Sept. 1, 1998).**

The Office no longer investigates or rejects original or reissue applications under 37 CFR 1.56. **1098 Off. Gaz. Pat. Office 502 (January 3, 1989)**. Therefore, nothing in this Notice is intended to imply that an investigation was done.

There is no indication that the person signing the instant petition was ever given a power of attorney or authorization of agent to prosecute the above-identified application. However, in accordance with 37 CFR 1.34(a), the signature appearing on the petition shall constitute a representation to the United States Patent and Trademark Office that he/she is authorized to represent the particular party in whose behalf he/she acts.

Your fee deficiency submission under 37 CFR 1.28 is hereby **ACCEPTED**.

This file is being referred to Files Repository.

Inquiries related to this communication should be directed to the undersigned at (571) 272-3226.

Andrea Smith
Petitions Examiner
Office of Petitions
Office of the Deputy Commissioner
for Patent Examination Policy

UNITED STATES PATENT AND TRADEMARK OFFICE

COMMISSIONER FOR PATENTS
UNITED STATES PATENT AND TRADEMARK OFFICE
P.O. BOX 1450
ALEXANDRIA, VA 22313-1450
www.uspto.gov

FISH & RICHARDSON PC
225 FRANKLIN STREET
BOSTON, MA 02110

COPY MAILED

MAR 16 2004

OFFICE OF PETITIONS

In re Application of
Marshall Medoff et al
Application No. 09/772,593
Filed: January 30, 2001
Attorney Docket No. 08895-019001
FIBROUS MATE

: DECISION GRANTING PETITION
: UNDER 37 CFR 313(c)(2)

This is a decision on the petition, filed March 5, 2004, under 37 CFR 1.313(c)(2) to withdraw the above-identified application from issue after payment of the issue fee.

The petition is **GRANTED**.

The above-identified application is withdrawn from issue for consideration of a submission under 37 CFR 1.114 (request for continued examination). See 37 CFR 1.313(c)(2).

Petitioner is advised that the issue fee paid on February 5, 2004 in the above-identified application cannot be refunded. If, however, the above-identified application is again allowed, petitioner may request that it be applied towards the issue fee required by the new Notice of Allowance.[1]

Telephone inquiries should be directed to the undersigned at (703) 305-8680.

This matter is being referred to Technology Center AU 1711 for processing of the request for continued examination under 37 CFR 1.114 and for consideration of the concurrently filed Information Disclosure Statement.

Frances Hicks
Petitions Examiner
Office of Petitions
Office of the Deputy Commissioner
for Patent Examination Policy

---

[1] The request to apply the issue fee to the new Notice may be satisfied by completing and returning the new Issue Fee Transmittal Form PTOL-85(b), which includes the following language thereon: "Commissioner for Patents is requested to apply the Issue Fee and Publication Fee (if any) or re-apply any previously paid issue fee to the application identified above." Petitioner is advised that, whether a fee is indicated as being due or not, the Issue Fee Transmittal Form **must** be completed and timely submitted to avoid abandonment. Note the language in bold text on the first page of the Notice of Allowance and Fee(s) Due (PTOL-85).

UNITED STATES PATENT AND TRADEMARK OFFICE

UNITED STATES DEPARTMENT OF COMMERCE
United States Patent and Trademark Office
Address: COMMISSIONER FOR PATENTS
P.O. Box 1450
Alexandria, Virginia 22313-1450
www.uspto.gov

NOVO NORDISK, INC.
INTELLECTUAL PROPERTY DEPARTMENT
100 COLLEGE ROAD WEST
PRINCETON, NJ 08540

Mail Date: 04/20/2010

Applicant	: Ib Jonassen	: DECISION ON REQUEST FOR
Patent Number	: 7576059	: RECALCULATION of PATENT
Issue Date	: 08/18/2009	: TERM ADJUSTMENT IN VIEW
Appliction No	: 09/772,607	: OF WYETH AND NOTICE OF INTENT TO
Filed	: 01/30/2001	: ISSUE CERTIFICATE OF CORRECTION
		:

The Request for Recalculation is **GRANTED** to the extent indicated.

The patent term adjustment has been determined to be **145** days. The USPTO will *sua sponte* issue a certificate of correction reflecting the amount of PTA days determined by the recalculation.

Prior to the issuance of the certificate of correction, the USPTO will afford patentee an opportunity to be heard and request reconsideration. Accordingly, patentee has **one month or thirty (30) days**, whichever is longer, to file a request for reconsideration of this patent term adjustment calculation. See 35 U.S.C. 154(b)(3)(B)(ii) and 37 CFR 1.322(a)(4). No extensions of time will be granted under 37 CFR 1.136.

Patentee should use document code PET.OP if electronically filing a request for reconsideration of this patent term adjustment calculation. The patentee must also include the information required by 37 CFR 1.705(b)(2) and the fee required by 37 CFR 1.18(e). If patentee does not file a timely request for reconsideration of this patent term adjustment calculation including the information required by 37 CFR 1.705(b)(2) and the fee required by 37 CFR 1.18(e), the USPTO will issue a certificate of correction reflecting the PTA determination noted above.

Patentee should be aware that in order to preserve the right to review in the United States District Court for the District of Columbia of the USPTO patent term adjustment determination, patentee must ensure that he or she also take the steps required under 35 U.S.C. 154(b)(4)(A) in a timely manner. Nothing in the request for recalculation should be construed as providing an alternative time frame for commencing a civil action under 35 U.S.C. 154(b)(4)(A).

Any questions concerning this decision should be directed to the Office of Patent Legal Administration at 571-272-7702.

UNITED STATES PATENT AND TRADEMARK OFFICE

UNITED STATES DEPARTMENT OF COMMERCE
United States Patent and Trademark Office
Address: COMMISSIONER FOR PATENTS
P.O. Box 1450
Alexandria, Virginia 22313-1450
www.uspto.gov

IBM CORPORATION
3039 CORNWALLIS RD.
DEPT. T81 / B503, PO BOX 12195
RESEARCH TRIANGLE PARK, NC 27709

Mail Date: 04/20/2010

Applicant	: Harm Sluiman	: DECISION ON REQUEST FOR
Patent Number	: 7647584	: RECALCULATION of PATENT
Issue Date	: 01/12/2010	: TERM ADJUSTMENT IN VIEW
Appliction No	: 09/772,650	: OF WYETH AND NOTICE OF INTENT TO
Filed	: 01/30/2001	: ISSUE CERTIFICATE OF CORRECTION
		:

The Request for Recalculation is **GRANTED** to the extent indicated.

The patent term adjustment has been determined to be **2085** days. The USPTO will *sua sponte* issue a certificate of correction reflecting the amount of PTA days determined by the recalculation.

Prior to the issuance of the certificate of correction, the USPTO will afford patentee an opportunity to be heard and request reconsideration. Accordingly, patentee has **one month or thirty (30) days**, whichever is longer, to file a request for reconsideration of this patent term adjustment calculation. See 35 U.S.C. 154(b)(3)(B)(ii) and 37 CFR 1.322(a)(4). No extensions of time will be granted under 37 CFR 1.136.

Patentee should use document code PET.OP if electronically filing a request for reconsideration of this patent term adjustment calculation. The patentee must also include the information required by 37 CFR 1.705(b)(2) and the fee required by 37 CFR 1.18(e). If patentee does not file a timely request for reconsideration of this patent term adjustment calculation including the information required by 37 CFR 1.705(b)(2) and the fee required by 37 CFR 1.18(e), the USPTO will issue a certificate of correction reflecting the PTA determination noted above.

Patentee should be aware that in order to preserve the right to review in the United States District Court for the District of Columbia of the USPTO patent term adjustment determination, patentee must ensure that he or she also take the steps required under 35 U.S.C. 154(b)(4)(A) in a timely manner. Nothing in the request for recalculation should be construed as providing an alternative time frame for commencing a civil action under 35 U.S.C. 154(b)(4)(A).

Any questions concerning this decision should be directed to the Office of Patent Legal Administration at 571-272-7702.

UNITED STATES PATENT AND TRADEMARK OFFICE

Commissioner for Patents
United States Patent and Trademark Office
P.O. Box 1450
Alexandria, VA 22313-1450
www.uspto.gov

MAIL

OCT 27 2008

DIRECTOR'S OFFICE
TECHNOLOGY CENTER 2600

MORGAN & FINNEGAN, L.L.P.
3 WORLD FINANCIAL CENTER
NEW YORK NY 10281-2101

In re Application of
OHASHI, KAZUHITO et al
Appl. No.: 09/772,664
Filed: January 30, 2001
For: **DISCREPANCY CORRECTION METHOD AND APPARATUS FOR CORRECTING DIFFERENCE IN LEVELS OF IMAGE SIGNALS OBTAINED BY AN IMAGE SENSOR HAVING A MULTIPLE OUTPUT CHANNELS**

DECISION ON PETITION

This is a decision on the petition filed February 20, 2008, to expunge information erroneously submitted in the above identified application..

Petitioner asserts "...that the "INFORMATION DISCLOSURE STATEMENT" (IDS) and accompanied papers filed with the United States Patent and Trademark Office (USPTO) on May 4, 2001 be expunged from the patented file. As discussed in detail below, the IDS and accompanied papers included a heading that erroneously included the Application No. for above-identified US Patent 7,324,664 B2. As a result of this unintended IDS heading, the USPTO incorrectly matched the May 4, 2001 IDS and accompanied papers with the unintended application."

A review of the file finds that the IDS filed May 4, 2001 was improperly matched to the instant application due to the incorrect Serial Number being provided by another law firm. Based upon other identifying information, it can be determined that this Amendment should have been matched to another similar, but different, Application Serial Number.

Accordingly, the petition is **GRANTED**.

The Information Disclosure Statement and accompanied papers, dated May 4, 2001, is hereby vacated and removed (e.g. closed) from the electronic file wrapper for the instant application.

Michael Horabik
Quality Assurance Specialist
Technology Center 2600
Communications

UNITED STATES PATENT AND TRADEMARK OFFICE

COMMISSIONER FOR PATENTS
UNITED STATES PATENT AND TRADEMARK OFFICE
WASHINGTON, D.C. 20231
www.uspto.gov

Paper No. 5

AGILENT TECHNOLOGIES
LEGAL DEPARTMENT, 51U-PD
INTELLECTUAL PROPERTY ADMINISTRATION
P.O. BOX 58043
SANTA CLARA, CA 95052-8043

COPY MAILED

OCT 1 8 2001

OFFICE OF PETITIONS

In re Application of
Peter G. Webb
Application No. 09/772,723
Filed: January 29, 2001
Attorney Docket No. 10010016-1

DECISION GRANTING
PETITION

This is a decision on the paper styled "Request For Correction Of Filing Receipt" filed May 14, 2001, which is properly treated as a petition under 37 CFR 1.10(c), requesting that the above-identified application be accorded a filing date of January 29, 2001, rather than the presently accorded filing date of January 30, 2001.

Applicant alleges that the application was deposited in "Express Mail" service with the U.S. Postal Service, on January 29, 2001. In support, applicant provided a copy of the Express Mail label, receipt no. EL675913881US, showing a Date-In of January 29, 2001. The same Express Mail receipt number appears on the original application transmittal letter with the file. Applicant requests that the application be accorded a filing date of January 29, 2001.

The Office considers the date the paper or fee is shown to have been deposited as "Express Mail" to be the "Date In" on the Express Mail label, MPEP 513. That is the date that verifies that the package was actually mailed. In view of the above, the evidence is convincing that the application was deposited as "Express Mail" with the US Postal Service on January 29, 2001.

The petition is granted. A copy of the corrected Filing Receipt is enclosed.

The application is being returned to Technology Center AU 1631 for examination in due course.

Telephone inquiries specific to this matter should be directed to Wan Laymon at (703) 306-5685.

Sherry Brinkley
Petitions Examiner
Office of Petitions
Office of the Deputy Commissioner
for Patent Examination Policy

Enclosure: Corrected Filing Receipt

UNITED STATES PATENT AND TRADEMARK OFFICE

COMMISSIONER FOR PATENTS
UNITED STATES PATENT AND TRADEMARK OFFICE
P.O. BOX 1450
ALEXANDRIA, VA 22313-1450
www.uspto.gov
DIW 07-03

Paper No. 12

GIFFORD, KRASS, GROH, SPRINKLE
PATMORE, ANDERSON & CITKOWSKI, P.C.
SUITE 400
280 N. OLD WOODWARD AVE.
BIRMINGHAM MI 48009

COPY MAILED

JUL 25 2003

OFFICE OF PETITIONS

In re Application of	:	
David Meisel	:	
Application No. 09/772,736	:	DECISION DISMISSING
Filed: 30 January, 2001	:	PETITION
Attorney Docket No. MIA-10004/36	:	

This is a decision on the petition filed on 6 June, 2003, which is treated as a petition under 37 CFR 1.78(a)(3), to accept an unintentionally delayed claim under 35 U.S.C. § 120 for the benefit of a prior-filed nonprovisional application.

The petition is **DISMISSED**.

A petition for acceptance of a claim for late priority under 37 CFR 1.78(a)(3) is only applicable to those applications filed on or after 29 November, 2000. Further, the petition is appropriate only after the expiration of the period specified in 37 CFR 1.78(a)(2). In addition, the petition under 37 CFR 1.78(a)(3) must be accompanied by:

(1) the reference required by 35 U.S.C. § 120 and 37 CFR 1.78(a)(2) of the prior-filed application, unless previously submitted;[1]

(2) the surcharge set forth in § 1.17(t); and

(3) a statement that the entire delay between the date the claim was due under 37 CFR 1.78(a)(2) and the date the claim was filed was unintentional. The Commissioner may require additional information where there is a question whether the delay was

[1]Any nonprovisional application or international application designated the United States of America claiming the benefit of one or more prior-filed copending applications or international applications designated the United States of America must contain or be amended to contain a reference (amendment to the first line of the specification following the title or in an application data sheet (ADS))to each such prior-filed application, identifying it by application number (consisting of the series code and serial number) or international application number and indicating the relationship of the applications. Cross references to other related applications may be made when appropriate (*see* § 1.14).

unintentional.

The petition is dismissed because the priority information in the amendment submitted with the present petition is not in proper form. The amendment states that "[t]his application is a continuation-in-part of U.S. patent application Serial No. 09/772,736 filed January 30, 2001..." A patent application cannot be a continuation-in-part of itself.[2]

Petitioner should provide an amendment containing an appropriate claim to priority with any renewed petition.

In order to expedite consideration, petitioner may wish to submit the substitute amendment by facsimile to the number indicated below and to the attention of Senior Petitions Attorney Douglas I. Wood.

Further correspondence with respect to this matter should be addressed as follows:

By mail: Mail Stop Petition
Commissioner for Patents
P.O. Box 1450
Alexandria, VA 22313-1450

By FAX: (703)308-6916
Attn: Office of Petitions

By hand: Crystal Plaza Four, Suite CP4-3C23
2201 South Clark Place
Arlington, VA 22202

Telephone inquires should be directed to Senior Petitions Attorney Douglas I. Wood at 703-308-6918.

Beverly M. Flanagan
Supervisory Petitions Examiner
Office of Petitions

---

[2]It is noted that Application No. 10/155,629 was filed as a continuation-in-part of the present application on 24 May, 2002. Thus, it appears that petitioner may have intended to file the present petition in Application No. 10/155,629.

UNITED STATES PATENT AND TRADEMARK OFFICE

COMMISSIONER FOR PATENTS
UNITED STATES PATENT AND TRADEMARK OFFICE
P.O. BOX 1450
ALEXANDRIA, VA 22313-1450
www.uspto.gov
dw 02-04

Paper No. 15

GIFFORD, KRASS, GROH, SPRINKLE
PATMORE, ANDERSON & CITKOWSKI, P.C.
SUITE 400
280 N. OLD WOODWARD AVE.
BIRMINGHAM MI 48009

COPY MAILED
FEB 17 2004
OFFICE OF PETITIONS

In re Application of	:	
David Meisel	:	
Application No. 09/772,736	:	DECISION GRANTING
Filed: 30 January, 2001	:	PETITION
Attorney Docket No. MIA-10004/36	:	

This is a decision on the renewed petition filed on 22 October, 2003, which is treated as a petition under 37 CFR 1.78(a)(6), to accept an unintentionally delayed claim under 35 U.S.C. § 119(e) for the benefit of prior-filed provisional applications.

The petition is **GRANTED**.

A petition under 37 CFR 1.78(a)(6) is only applicable to those applications filed on or after 29 November, 2000. Further, the petition is appropriate only after the expiration of the period specified in 37 CFR 1.78(a)(5) and must be filed during the pendency of the nonprovisional application. In addition, the petition must be accompanied by:

(1) the reference required by 35 U.S.C. § 119(e) and 37 CFR 1.78(a)(5) of the prior-filed application, unless previously submitted;[1]

(2) the surcharge set forth in § 1.17(t); and

(3) a statement that the entire delay between the date the claim was due under 37 CFR 1.78(a)(2) and the date the claim was filed was unintentional. The Commissioner may require additional information where there is a question whether the delay was unintentional.

---

[1]Any nonprovisional application or international application designating the United States of America claiming the benefit of one or more prior-filed provisional applications must contain or be amended to contain a reference (amendment to the first line of the specification following the title or in an application data sheet (ADS)) to each such prior-filed application, identifying it by application number (consisting of the series code and serial number).

The present pending nonprovisional application is a continuation-in-part of prior-filed Application No. 09/387,395, filed on 2 September, 1999 (now U.S. Patent 6,194,643, issued on 27 February, 2001), within twelve months of the filing date of the prior provisional application No. 60/099,081, filed on 4 September, 1998, and which is the earliest-filed case for which benefit is claimed. A reference to the prior provisional applications has been included in an amendment to the first sentence of the specification following the title.

The present nonprovisional application was filed after 29 November, 2000, and the claim for priority herein is submitted after the expiration of the period specified in 37 CFR 1.78(a)(5). Also, the reference to the prior-filed provisional applications was submitted during the pendency of the nonprovisional application for which the benefit is sought.[2] Accordingly, having found that the present petition satisfies the conditions of 37 CFR 1.78(a)(6) for acceptance of an unintentionally delayed claim for priority under 35 U.S.C. § 119(e), the petition to accept an unintentionally delayed claim to benefit to prior-filed provisional Applications Nos. 60/099,081, 60/104,920, 60/109,169, 60/116,746, 60/136,188, and 60/144,969 is granted.

A corrected filing receipt which includes the benefit claims to the provisional applications accompanies this decision on petition.

The granting of the petition to accept the delayed benefit claim to the prior applications under 37 CFR 1.78(a)(3) and 37 CFR 1.78(a)(6) should <u>not</u> be construed as meaning that the instant application is entitled to the benefit of the filing date of the prior applications. In order for the instant application to be entitled to the benefit of the prior applications, all other requirements under 35 U.S.C. §120 and 1.78(a)(1) and (a)(2) and under 35 U.S.C. §119(e) and 37 CFR 1.78(a)(4) and (a)(5) must be met. Accordingly, the examiner will, in due course, consider this benefit claim and determine whether the instant application is entitled to the benefit of the earlier filing date.

The $1,300.00 fee required by 37 CFR 1.78(a)(6) has been received.

---

[2] <u>See</u> 35 U.S.C. § 119(e).

The application is being forwarded to Technology Center 2800 for processing the amendment filed on 22 October, 2003, and for consideration by the examiner of the claim under 35 U.S.C. § 119(e) and 37 CFR 1.78(a)(5) for the benefit of the prior provisional applications listed above, No. 60/099,081, filed on 4 September, 1998; No. 60/104,920, filed on 20 October, 1998; No. 60/109,169, filed on 20 November, 1998; No. 60/116,746, filed on 22 January, 1999; No. 60/136,188, filed on 27 May, 1999, and No. 60/144,969, filed on 21 July, 1999.

Telephone inquiries related to this decision should be directed to Senior Petitions Attorney Douglas I. Wood at 703-308-6918.

Charles A. Pearson
Director, Office of Petitions

Encl: Corrected Filing Receipt

O.I.P.E.
JUN 20 2005
PATENT & TRADEMARK OFFICE

Attorney's Docket No.: 11602-004001

IN THE UNITED STATES PATENT AND TRADEMARK OFFICE

Applicant : Alfred L. Chi
Serial No. : 09/772,748
Filed : January 30, 2001
Title : CONTROLLED PURCHASE SYSTEMS

Art Unit : 3621
Examiner : P. Elisca

APPROVED
10/21/05

Attention: Group Director
Commissioner for Patents
P.O. Box 1450
Alexandria, VA 22313-1450

REQUEST FOR PERMISSION TO WITHDRAW AS ATTORNEY OF RECORD

The undersigned attorney, on behalf of himself and the other attorneys of record, who are members or associates in the firm of FISH & RICHARDSON P.C., or who were so listed at the time of their appointment, and on behalf of any associate attorneys appointed by any of the attorneys on whose behalf this petition is filed, including the following:

David L. Feigenbaum, Reg. No. 30,378; John F. Hayden, Reg. No. 37,640; Robert E. Hillman, Reg. No. 22,837; and Celia H. Leber, Reg. No. 33,524, request the approval of the Commissioner to withdraw as attorneys/agents of record.

The present mailing address of the attorneys/agents of record is:

225 Franklin Street
Boston, MA 02110-2804

Please mail all future correspondence to the applicant as follows:

Alfred L. Chi
2 Eli Whitney Street
Westborough, MA 01581

CERTIFICATE OF MAILING BY FIRST CLASS MAIL

I hereby certify under 37 CFR §1.8(a) that this correspondence is being deposited with the United States Postal Service as first class mail with sufficient postage on the date indicated below and is addressed to the Commissioner for Patents, P.O. Box 1450, Alexandria, VA 22313-1450.

June 17, 2005
Date of Deposit

Lesley J. Arcidy
Signature

Lesley J. Arcidy
Typed or Printed Name of Person Signing Certificate

The reasons for which the permission of the Commissioner is sought for withdrawal of the attorneys/agents of record is non-payment of legal fees and costs.

Notice of the attorney's request to withdraw is being sent simultaneously to the applicant and the relevant papers and files will immediately be sent the applicant upon approval of the request by the Commissioner.

At least thirty days remain for the applicant to take any action due in this case or an appropriate request for extension of time accompanies this request seeking additional time. The attorneys/agents on whose behalf this petition is filed will ensure that the applicant has sufficient time after approval of this request to reply or employ another to reply to any outstanding requirement of the Patent and Trademark Office.

Two copies of this request are filed herewith. The Commissioner is authorized to apply any charges or credits to deposit account no. 06-1050, referencing 11602-004001.

Respectfully submitted,

Date: 6/17/5

David L. Feigenbaum
Reg. No. 30,378

Fish & Richardson P.C.
225 Franklin Street
Boston, MA 02110-2804
Telephone: (617) 542-5070
Facsimile: (617) 542-8906

20898785.doc

UNITED STATES PATENT AND TRADEMARK OFFICE

Under Secretary of Commerce for Intellectual Property and
Director of the United States Patent and Trademark Office
Washington, D.C. 20231
www.uspto.gov

Paper No. 9

DYKEMA GOSSETT PLLC
39577 WOODWARD AVENUE
SUITE 300
BLOOMFIELD HILLS, MI 48304

COPY MAILED

APR 0 4 2002

OFFICE OF PETITIONS

In re Application of	:	
James F. Zeich et al	:	
Application No. 09/772,785	:	DECISION GRANTING PETITION
Filed: January 30, 2001	:	UNDER 37 CFR 1.137(f)
Attorney Docket No. 60680-491	:	

This is a decision on the petition filed March 19, 2002, to revive the instant nonprovisional application under the unintentional provisions of 37 CFR 1.137(f).

The petition is **granted**.

This application became abandoned pursuant to 35 USC 122(b)(2)(B)(iii) for failure to timely notify the Office of the filing of an application in a foreign country, or under a multilateral international agreement, that requires publication of applications 18 months after filing.

A petition under 37 CFR 1.137(f) must be accompanied by: (1) the reply which is met by the notification of such filing in a foreign country or under a multinational treaty;[1] (2) the petition fee as set forth in 37 CFR 1.17(m); and (3) a statement that the entire delay in filing the required reply from the due date of the reply until the filing of a grantable petition was unintentional. The Commissioner may require additional information where there is a question whether the delay was unintentional.

The instant petition has been found in compliance with 37 CFR 1.137(f). Accordingly, the failure to timely notify the Office of a foreign or international filing within 45 days as provided by 35 USC 122(b)(2)(B)(iii) is accepted as having been unintentionally delayed.

---

[1] The filing of a petition under this section will not relieve applicant of his obligation to reply to any outstanding Office action.

The Nonpublication Request Under 35 SC122(b)(2)(B)(ii) has been rescinded. A Corrected Filing Receipt which sets forth the projected publication date of July 11, 2002, accompanies this decision on petition.

This application is being forwarded to Technology Center AU 3619 for appropriate action on the amendment received March 11, 2002 in response to the November 29, 2001 nonfinal Office action.

Any inquiries concerning this decision may be directed to the undersigned at (703) 305-8680.

Frances Hicks

Frances Hicks
Petitions Examiner
Office of Petitions
Office of the Deputy Commissioner
for Patent Examination Policy

ATTACHMENT: Corrected Filing Receipt

UNITED STATES PATENT AND TRADEMARK OFFICE

Commissioner for Patents
United States Patent and Trademark Office
P.O. Box 1450
Alexandria, VA 22313-1450
www.uspto.gov

BAKER & MCKENZIE LLP
PENNZOIL PLACE, SOUTH TOWER
711 LOUISIANA, SUITE 3400
HOUSTON TX 77002-2716

COPY MAILED

APR 22 2009

OFFICE OF PETITIONS

In re Application of :
Schersl :
Application No. 09/772,790 :
Filed: January 30, 2001 :
Attorney Docket No. 22106965.104181 :

ON PETITION

This is a decision on the petition under 37 CFR 1.137(b), filed November 26, 2008, to revive the above-identified application.

The petition is **DISMISSED.**

Any request for reconsideration of this decision must be submitted within TWO (2) MONTHS from the mail date of this decision. Extensions of time under 37 CFR 1.136(a) are permitted. The reconsideration request should include a cover letter entitled "**Renewed Petition under 37 CFR 1.137(b)**." This is **not** final agency action within the meaning of 5 U.S.C. § 704.

A grantable petition under 37 CFR 1.137(b) must be accompanied by: (1) the required reply, unless previously filed; (2) the petition fee as set forth in 37 CFR 1.17(m); (3) a statement that the entire delay in filing the required reply from the due date for the reply until the filing of a grantable petition pursuant to 37 CFR 1.137(b) was unintentional; and (4) any terminal disclaimer (and fee as set forth in 37 CFR 1.20(d)) required by 37 CFR 1.137(c). Where there is a question as to whether either the abandonment or the delay in filing a petition under 37 CFR 1.137 was unintentional, the Commissioner may require additional information. See MPEP 711.03(c)(III)(C) and (D). The instant petition lack(s) item(s) (1).

The above-identified application became abandoned for failure to reply within the meaning of 37 CFR 1.113 in a timely manner to the final Office action mailed December 6, 2006, which set a shortened statutory period for reply of three (3) months. A reply under 37 CFR 1.113 is limited to an amendment that *prima facie* places the application in condition for allowance or a Notice of Appeal (and appeal fee required by 37 CFR 1.17(b)). No amendment *prima facie* placing the application in condition for allowance or Notice of Appeal (and appeal fee) was timely filed. No extensions of time under the provisions of 37 CFR 1.136(a) were obtained. Accordingly, the above-identified application became abandoned on March 7, 2007.

Further correspondence with respect to this matter should be addressed as follows:

By mail: Mail Stop PETITION
Commissioner for Patents
Post Office Box 1450
Alexandria, VA 22313-1450

By hand: Customer Service Window
Randolph Building
401 Dulany Street
Alexandria, VA 22314

By facsimile: (571) 272-8300
ATTN: Office of Petitions

Telephone inquiries concerning this decision should be directed to the undersigned at (571) 272-3208.

Karen Creasy

Karen Creasy
Petitions Examiner
Office of Petitions

Attachment: Advisory Action

Advisory Action Before the Filing of an Appeal Brief	Application No. 09/772,790	Applicant(s) SCHERSL, ENDRE MARKOVITS	
	Examiner Renee Claytor	Art Unit 1617	

--The MAILING DATE of this communication appears on the cover sheet with the correspondence address --

THE REPLY FILED 26 November 2008 FAILS TO PLACE THIS APPLICATION IN CONDITION FOR ALLOWANCE.

1. ☐ The reply was filed after a final rejection, but prior to or on the same day as filing a Notice of Appeal. To avoid abandonment of this application, applicant must timely file one of the following replies: (1) an amendment, affidavit, or other evidence, which places the application in condition for allowance; (2) a Notice of Appeal (with appeal fee) in compliance with 37 CFR 41.31; or (3) a Request for Continued Examination (RCE) in compliance with 37 CFR 1.114. The reply must be filed within one of the following time periods:
   a) ☐ The period for reply expires _____months from the mailing date of the final rejection.
   b) ☐ The period for reply expires on: (1) the mailing date of this Advisory Action, or (2) the date set forth in the final rejection, whichever is later. In no event, however, will the statutory period for reply expire later than SIX MONTHS from the mailing date of the final rejection.
   Examiner Note: If box 1 is checked, check either box (a) or (b). ONLY CHECK BOX (b) WHEN THE FIRST REPLY WAS FILED WITHIN TWO MONTHS OF THE FINAL REJECTION. See MPEP 706.07(f).

Extensions of time may be obtained under 37 CFR 1.136(a). The date on which the petition under 37 CFR 1.136(a) and the appropriate extension fee have been filed is the date for purposes of determining the period of extension and the corresponding amount of the fee. The appropriate extension fee under 37 CFR 1.17(a) is calculated from: (1) the expiration date of the shortened statutory period for reply originally set in the final Office action; or (2) as set forth in (b) above, if checked. Any reply received by the Office later than three months after the mailing date of the final rejection, even if timely filed, may reduce any earned patent term adjustment. See 37 CFR 1.704(b).

NOTICE OF APPEAL

2. ☐ The Notice of Appeal was filed on _____. A brief in compliance with 37 CFR 41.37 must be filed within two months of the date of filing the Notice of Appeal (37 CFR 41.37(a)), or any extension thereof (37 CFR 41.37(e)), to avoid dismissal of the appeal. Since a Notice of Appeal has been filed, any reply must be filed within the time period set forth in 37 CFR 41.37(a).

AMENDMENTS

3. ☒ The proposed amendment(s) filed after a final rejection, but prior to the date of filing a brief, will not be entered because
   (a) ☒ They raise new issues that would require further consideration and/or search (see NOTE below);
   (b) ☐ They raise the issue of new matter (see NOTE below);
   (c) ☐ They are not deemed to place the application in better form for appeal by materially reducing or simplifying the issues for appeal; and/or
   (d) ☐ They present additional claims without canceling a corresponding number of finally rejected claims.
   NOTE: _____. (See 37 CFR 1.116 and 41.33(a)).
4. ☐ The amendments are not in compliance with 37 CFR 1.121. See attached Notice of Non-Compliant Amendment (PTOL-324).
5. ☐ Applicant's reply has overcome the following rejection(s): _____.
6. ☐ Newly proposed or amended claim(s) _____ would be allowable if submitted in a separate, timely filed amendment canceling the non-allowable claim(s).
7. ☐ For purposes of appeal, the proposed amendment(s): a) ☐ will not be entered, or b) ☐ will be entered and an explanation of how the new or amended claims would be rejected is provided below or appended.
   The status of the claim(s) is (or will be) as follows:
   Claim(s) allowed: _____.
   Claim(s) objected to: _____.
   Claim(s) rejected: _____.
   Claim(s) withdrawn from consideration: _____.

AFFIDAVIT OR OTHER EVIDENCE

8. ☐ The affidavit or other evidence filed after a final action, but before or on the date of filing a Notice of Appeal will not be entered because applicant failed to provide a showing of good and sufficient reasons why the affidavit or other evidence is necessary and was not earlier presented. See 37 CFR 1.116(e).
9. ☐ The affidavit or other evidence filed after the date of filing a Notice of Appeal, but prior to the date of filing a brief, will not be entered because the affidavit or other evidence failed to overcome all rejections under appeal and/or appellant fails to provide a showing a good and sufficient reasons why it is necessary and was not earlier presented. See 37 CFR 41.33(d)(1).
10. ☐ The affidavit or other evidence is entered. An explanation of the status of the claims after entry is below or attached.

REQUEST FOR RECONSIDERATION/OTHER

11. ☐ The request for reconsideration has been considered but does NOT place the application in condition for allowance because: _____.
12. ☐ Note the attached Information *Disclosure Statement*(s). (PTO/SB/08) Paper No(s). _____
13. ☐ Other: _____.

/SREENI PADMANABHAN/
Supervisory Patent Examiner, Art Unit 1617

UNITED STATES PATENT AND TRADEMARK OFFICE

Commissioner for Patents
United States Patent and Trademark Office
P.O. Box 1450
Alexandria, VA 22313-1450
www.uspto.gov

PITNEY HARDIN LLP
7 TIMES SQUARE
NEW YORK NY 10036-7311

JUN 04 2007

In re Application of:
Victor, Bart, et al.
Serial No. 09/772,810
Filed: January 30, 2001
Docket: 3977-8
Title: METHOD AND MATERIALS FOR ENCOURAGING CREATIVE THINKING, PLANNING OR DECISION MAKING

DECISION ON PETITION UNDER 37 CFR § 1.181

This is a decision on the petition filed on October 16, 2006 requesting the Requirement for Information under 37 CFR § 1.105 in the Office action mailed April 12, 2006 be vacated and requesting that the Notice of Non-Compliant Amendment (the Notice) mailed August 01, 2006 be vacated in view of the vacating of the Requirement for Information. Alternatively, the petition requests, essentially, that the Notice be modified giving applicants one month to properly respond to the Notice with extendable periods, or alternatively, a new Office action should be remailed, restarting applicants' shortened statutory period.

The petition is dismissed.

Background

After an appeal brief was filed June 27, 2005, based on a Final Rejection mailed October 21, 2003, additional prior art in the form of publications came to the examiner's attention. The examiner newly rejected claims in an Office action mailed April 12, 2006 as anticipated by an article in The Technology Teacher entitled "TECHNOTOWN - A School- Wide Design Technology Project" (Technotown) at pages 39-43 dated September, 1994. (The examiner also requests applicants attention be directed to pages 13-15 in the same publication). The examiner points out in discussing Technotown that it is clear from the article that a Lego representative was present and based on this Lego should be aware of this reference. The examiner believes the reference to be sufficiently relevant to the examination that the 37 CFR § 1.105 requirement was made part of the Office action requiring applicants to submit all relevant information similar in nature to the Technotown reference.

Applicants submitted a response filed July 12, 2006 in which applicants argue the merits of the rejection and assert that the Requirement for Information is misdirected. The examiner mailed the Notice of Non-Compliant Amendment (August 01, 2006), informing applicants that their time continues to run from the mailing of the Office action mailed April 12, 2006. Applicants followed with the present petition under review.

Discussion and Decision

It would appear from the omission of any denial in applicants' response to the Office action, that at least the applied publication in the Office action has been known by at least one assignee as asserted by the examiner. The examiner believes the publication sufficiently pertinent as a reference that the Requirement for Information for other related references or publications has been made. That applicants argue that the applied publication is not relevant is not the issue. Unless information becomes known to the contrary, it is assumed that applicants did not cite the publication based upon the belief it is not relevant for citation as part of their 37 CFR § 1.56 obligations or else inadvertently omitted citing it. Nevertheless, the purpose of 37 CFR § 1.105 is to go beyond 37 CRF 1.56. MPEP 704.11 states "[T]he purpose of 37 CFR § 1.105 is to improve patent quality, and render better decisions, and not to put applicants in jeopardy of meeting their duties of candor and good faith in their replies to a requirement for information."

From a recent Federal Circuit decision (Star Fruits S.N.C. v. United States, 73 USPQ2d 1409 (Fed. Cir. 2005)):

> Scope of information that may be required from applicant by patent examiner pursuant to 37 C.F.R. §1.105 encompasses information relevant to patent examination either procedurally or substantively, and includes zone of information beyond that defined by 37 C.F.R. §1.56 as material to patentability, and beyond that which is directly useful to support rejection or conclusively decide issue of patentability, since Section 1.105(a)(1) states that PTO may "require the submission ... of such information as may be reasonably necessary to properly examine or treat the matter"[.] Star Fruits S.N.C. v. United States, 73 USPQ2d 1409 (Fed. Cir. 2005).
>
> Duty of candor embodied in 37 C.F.R. §1.56 does not give patent applicant power to refuse requirement for information under 37 C.F.R. §1.105, since neither regulation states that response to such requirement may be limited, at applicant's discretion, to whatever applicant believes it might be affirmatively required to submit under Section 1.56, since language in Section 1.105(a)(1), which permits PTO to "require the submission ... of such information as may be reasonably necessary to properly examine or treat the matter," expressly states that PTO, not applicant, controls scope of requirement for information, and since scope of information that may be required under Section 1.105 is broader than information that applicant is duty bound to provide under Section 1.56. Star Fruits S.N.C. v. United States, 73 USPQ2d 1409 (Fed. Cir. 2005).
>
> United States Patent and Trademark Office can use requirement for information under 37 C.F.R. §1.105 to compel disclosure of information that patent examiner deems pertinent to patentability,

> even if applicant disagrees with examiner concerning significance of information to ultimate question of whether application discloses patentable subject matter, since PTO is clearly entitled to use Section 1.105 to seek information that may support rejection, and since examiner is charged with duty of deciding whether patent should issue from application, and so long as examiner's request for information is not arbitrary or capricious, applicant cannot impede examiner's performance of that duty by refusing to comply with information requirement that proceeds from examiner's view of scope of law to be applied to application. Star Fruits S.N.C. v. United States, 73 USPQ2d 1409 (Fed. Cir. 2005).

In view of the above, the Requirement for Information is proper and will not be vacated or in any way modified.

As to vacating or amending the Notice of Non-Compliant Amendment, it is noted that 37 CFR § 1.105(c) states that a reply, or failure to reply, to a requirement for information will be governed by §§ 1.135 and 1.136. It does not appear that applicants made a *bona fide* attempt to respond to the Requirement for Information and merely failed in some part to comply. Instead, applicants explicitly refused to comply by stating the Requirement for Information is "misdirected and...traversed." Petitioner is apparently of the belief that the examiner must still provide the extendable one month period because the Notice of Non-Compliant Amendment fails to provide what the examiner did on the pre-printed except in the situation where the non-compliant amendment is an after-final or an amendment filed after allowance. However, the examiner and applicants are not governed by the propriety of the form used setting forth every situation encountered but by court precedent, statutes, the governing regulations, and the M.P.E.P. The examiner properly addressed the time applicants have remaining in the attachment to the form. Accordingly, the Notice of Non-Compliant Amendment will not be vacated or modified.

A new Office action restarting the shortened statutory period, as requested by petitioner as another alternative, will not occur. The examiner's Office action and the Notice of Non-Compliant Amendment are seen as proper. These examiner's actions that applicants are presently required to respond to are not seen as either arbitrary or capricious or containing error that requires that a new Office action be mailed restarting the shortened statutory period.

Summary

The Requirement for Information set forth within the Office action mailed April 12, 2006, and the Notice of Non-Compliant Amendment mailed April 12, 2006 stating that applicants' response time continues running, are proper and will not be vacated or modified. In view that they are proper, a new Office action providing a new, shortened statutory period will not occur.

Petitioner may file a request for reconsideration of this decision, without fee. However, such request must be filed within two months of the date of this decision. Petitioner is reminded that the mere filing of the request will not stay any period for reply that may be running against the application, nor act as a stay of other proceedings. See 37 CFR § 1.181(f).

PETITION DISMISSED.

Any inquiry regarding this decision should be directed to Allan N. Shoap, Special Programs Examiner, at (571) 272-4514.

Karen M. Young

Karen M. Young, Director
Technology Center 3700

UNITED STATES PATENT AND TRADEMARK OFFICE

Commissioner for Patents
United States Patent and Trademark Office
P.O. Box 1450
Alexandria, VA 22313-1450
www.uspto.gov

McDonnell Boehnen Hulbert & Berghoff
300 Sout Wacker Drive
Chicago, Illinois 60606

COPY MAILED

MAR 0 3 2006

OFFICE OF PETITIONS

In re Application of	:	
Rodgers et al.	:	
Application No. 09/772,819	:	LETTER REGARDING
Filed: January 30, 2001	:	PATENT TERM ADJUSTMENT
Atty Docket No. 3008	:	

This is in response to "Applicant's Comment on Patent Term Adjustment calculation and filing of terminal disclaimer" filed July 15, 2005, pursuant to applicants' duty of candor and good faith to the Office. Applicants disclose that a terminal disclaimer was submitted in this application. Applicants disclose that because of the submission of the terminal disclaimer, the patent issued on this application is not entitled to any patent term adjustment.

The request for correction of the patent term adjustment (PTA) is **DISMISSED**.

Applicants are given **thirty (30) days** from the mail date of this decision to respond. No extensions of time will be granted under § 1.136.

35 U.S.C. 154(b)(2)(B) provides that:

> No patent the term of which has been disclaimed beyond a specified date may be adjusted under this section beyond the expiration date specified in the disclaimer.

37 CFR § 1.703(g) provides that:

> No patent, the term of which has been disclaimed beyond a specified date, shall be adjusted under § 1.702 and this section beyond the expiration date specified in the disclaimer.

The provisions of § 154(b), for adjustment due to examination delay, apply to original applications[1], other than designs, filed

on or after May 29, 2000. The Office calculates patent term adjustment for examination delay in all eligible applications. In calculating the patent term adjustment, the Office does not differentiate between applications that have terminal disclaimers and those that do not. Nor does the Office undertake the burdensome task of reviewing every application with a terminal disclaimer to determine if the patent term adjustment accorded would adjust the term beyond the expiration date specified in the disclaimer.

Rather, on issuance of the application, in compliance with 35 U.S.C. 154(b) and 37 CFR § 1.703(g), it is indicated in the patent that the patent term adjustment indicated therein is subject to any disclaimer. Moreover, it is also stated therein that the patent is subject to a terminal disclaimer.

As this letter was submitted as an advisement to the Office of an error in Applicants' favor, the Office will not assess the $200.00 application fee under 37 CFR 1.705(b). The Office thanks applicants for their good faith and candor in bringing this to the attention of the Office.

The application is being forwarded to the Office of Patent Publication for timely issuance of the application.

Telephone inquiries specific to this matter should be directed to Kery Fries, Senior Petitions Attorney, at (571) 272-7757.

Kery A Fries

Kery Fries
Senior Legal Advisor
Office of Patent Legal Administration
Office of Deputy Commissioner
for Patent Examination Policy

UNITED STATES PATENT AND TRADEMARK OFFICE

Commissioner for Patents
United States Patent and Trademark Office
P.O. Box 1450
Alexandria, VA 22313-1450
www.uspto.gov

COPY MAILED

MAR 09 2006

OFFICE OF PETITIONS

McDonnell Boehnen Hulbert & Berghoff
300 South Wacker Drive
Chicago, Illinois 60606

In re Application of
Rodgers et al
Application No. 09/772,819
Filed: January 30, 2001
Attorney Docket No. 98,365-B1

: DECISION DISMISSING LETTER

This decision is in response to applicants' "APPLICANT'S COMMENT ON PATENT TERM ADJUSTMENT CALCULATION AND FILING OF TERMINAL DISCLAIMER" filed on July 15, 2005 requesting that the Office review the Patent Term Adjustment at the time of the issuance of the patent. Applicants' assert that the PTA determination may be inaccurate because the Office did not take into consideration the filing of a terminal disclaimer.

The applicants' Application for Patent Term Adjustment is **Dismissed.** The correct determination at the time of the issuance of the application is four hundred and eighty-two days.

Applicants' assert that the patent term determination is incorrect because the applicants filed a terminal disclaimer in the application to obviate a double patenting rejection.

The applicants' arguments are not persuasive. The Office notes that it will make a PTA determination regardless of whether the application has filed a terminal disclaimer. The Office notes that the language of the front of the patent says the following : subject to any disclaimer, the term of this patent is extended or adjusted under 35 U.S.C. 154 (b) by XXX days. Accordingly, it is incumbent upon application to ascertain whether or not the additional time accrued for PTA can be enforced. Accordingly, applicant must review the language of the terminal disclaimer as well as the expiration date of the other patent to determine the expiration date of 09/772,819. See MPEP 2701 (2700-2).

A $200.00 fee has not been assessed in this application and no additional fees are required by the Office. The Office thanks applicants for their good faith and candor in bringing this to the attention of the Office.

After the mailing of this decision, this patented application should be forwarded to the file repository for storage of the patented file.

Any additional questions should be directed to Kery A. Fries, Senior Legal Advisor, Office of Patent Legal Administration at 571-272-7757.

Kery Fries

Kery Fries
Senior Legal Advisor
Office of Patent Legal Administration
Office of Deputy Commissioner
For Patent Examinationn Policy

OIPE JC141
JUL 15 2005
PATENT & TRADEMARK OFFICE

PATENT

IN THE UNITED STATES PATENT AND TRADEMARK OFFICE
(Case No. 98,365-B1)

In the application of:			
Kathleen E. Rodgers, et al.		Art Unit:	**1654**
Serial No:	**09/772,819**	Examiner:	**Audet**
Filed:	**January 30, 2001**	Confirmation:	**3008**
For:	**Methods for Accelerating Bone, Cartilage and Connective Tissue Growth**		

RECEIVED
AUG 16 2005
OFFICE OF PETITIONS

RECEIVED
JUL 25 2005
OFFICE OF PETITIONS

MAIL STOP ISSUE FEE
Commissioner for Patents
P.O. Box 1450
Alexandria, VA 22313-1450

APPLICANT'S COMMENT ON PATENT TERM ADJUSTMENT CALCULATION AND FILING OF TERMINAL DISCLAIMER

Dear Sir:

Applicants wish to make the following of record in the above identified patent application:

1) Applicants are in agreement with the calculation of the Office, noted in the Determination of Patent Term Adjustment under 35 U.S.C. 154 (b) mailed October 6, 2004, that the Patent Term Adjustment to date is 482 days.
2) Applicants note that a Terminal Disclaimer to Obviate a Double Patenting Rejection Over a Prior Patent has been filed in this application, which may alter the applicability of the Patent Term Adjustment.

Respectfully submitted,
McDonnell Boehnen Hulbert & Berghoff LLP

Date: 7-15-05

By: _____
David S. Harper
Registration No. 42,636

07-18-05 petition office

PATENT

IN THE UNITED STATES PATENT AND TRADEMARK OFFICE
(MBHB Case No. 98,365-B1)

In re Application of:	)	
Kathleen E. Rodgers, et al.	)	Group Art Unit: 1654
Serial No.: 09/~~722~~ 772,819	)	Examiner: Audet
Filed: January 30, 2001	)	Confirmation No.: 3008
For: Methods for Accelerating Bone, Cartilage and Connective Tissue Growth	)	

RECEIVED
AUG 16 2005
OFFICE OF PETITIONS

RECEIVED
JUL 25 2005
OFFICE OF PETITIONS

TRANSMITTAL LETTER

Mail Stop: **ISSUE FEE**
Commissioner for Patents
P.O. Box 1450
Alexandria, VA 22313-1450

Sir:

In regard to the above identified application,

1. We are transmitting herewith the attached:

   ☒ Applicant's Comment of Patent Term Adjustment Calculation and Filing of Terminal Disclaimer (1 sheet);
   ☒ Return Receipt Postcard.

2. With respect to additional fees:

   ☒ No fee is required.

   ☒ Please charge any additional fees or credit overpayment to Deposit Account No.13-2490.

3. CERTIFICATE OF MAILING UNDER 37 CFR § 1.10: The undersigned hereby certifies that this Transmittal Letter and the paper, as described in paragraph 1 hereinabove, are being deposited with the United States Postal Service with sufficient postage as "Express Mail Post Office to Addressee," mail in an envelope addressed to: Mail Stop Issue Fee, Commissioner for Patents, P.O. Box 1450, Alexandria, VA 22313-1450 on this 15th day of July, 2005 under Express Mail Certificate No. EV722672722US.

Respectfully submitted,

By: _____
David S. Harper
Registration No. 42,636

RECEIVED
OIPE/IAP
AUG 15 2005

McDONNELL BOEHNEN,
HULBERT & BERGHOFF
300 SOUTH WACKER DRIVE
CHICAGO, ILLINOIS 60606
TELEPHONE (312) 913-0001

PTO/SB/66 (03-09)
Approved for use through 03/31/2012. OMB 0651-0016
U.S. Patent and Trademark Office: U.S. DEPARTMENT OF COMMERCE
Under the Paperwork Reduction Act of 1995, no persons are required to respond to a collection of information unless it displays valid OMB control number.

PETITION TO ACCEPT UNINTENTIONALLY DELAYED PAYMENT OF MAINTENANCE FEE IN AN EXPIRED PATENT (37 CFR 1.378(c))

Patent Number	Issue Date (YYYY-MM-DD)	Application Number	Filing Date (YYYY-MM-DD)	Docket Number (if applicable)
6,655,896	2003-12-02	09772897	2001-01-31	3136-010

CAUTION: Maintenance fee (and surcharge, if any) payment must correctly identify: (1) the patent number and (2) the application number of the actual U.S. application leading to issuance of that patent to ensure the fee(s) is/are associated with the correct patent. 37 CFR 1.366(c) and (d).

SMALL ENTITY
☒ Patentee claims, or has previously claimed, small entity status. See 37 CFR 1.27.

LOSS OF ENTITLEMENT TO SMALL ENTITY STATUS
☐ Patentee is no longer entitled to small entity status. See 37 CFR 1.27(g)

NOT Small Entity			Small Entity		
	Fee	Code		Fee	Code
○	3 ½ year	(1551)	◉	3 ½ year	(2551)
○	7 ½ year	(1552)	○	7 ½ year	(2552)
○	11 ½ year	(1553)	○	11 ½ year	(2553)

SURCHARGE
The surcharge required by 37 CFR 1.20(i)(2) (Fee Code 1558) must be paid as a condition of accepting unintentionally delayed payment of the maintenance fee.

MAINTENANCE FEE (37 CFR 1.20(e)-(g))
The appropriate maintenance fee must be submitted with this petition.

STATEMENT
THE UNDERSIGNED CERTIFIES THAT THE DELAY IN PAYMENT OF THE MAINTENANCE FEE TO THIS PATENT WAS UNINTENTIONAL

PETITIONER(S) REQUEST THAT THE DELAYED PAYMENT OF THE MAINTENANCE FEE BE ACCEPTED AND THE PATENT REINSTATED

THIS PORTION MUST BE COMPLETED BY THE SIGNATORY OR SIGNATORIES

37 CFR 1.378(d) states: "Any petition under this section must be signed by an attorney or agent registered to practice before the Patent and Trademark Office, or by the patentee, the assignee, or other party in interest."

I certify, in accordance with 37 CFR 1.4(d)(4) that I am

◉ An attorney or agent registered to practice before the Patent and Trademark Office

○ A sole patentee

○ A joint patentee; I certify that I am authorized to sign this submission on behalf of all the other patentees.

○ A joint patentee; all of whom are signing this e-petition

○ The assignee of record of the entire interest

Patent Practitioner			
A signature of the applicant or representative is required in accordance with 37 CFR 1.33 and 10.18. Please see 37 CFR 1.4(d) for the form of the signature			
Signature	/BRUCE H. TROXELL/	Date (YYYY-MM-DD)	2009-06-02
Name	BRUCE H. TROXELL	Registration Number	26592

This collection of information is required by 37 CFR 1.378(c). The information is required to obtain or retain a benefit by the public which is to file (and by the USPTO to process) an application. Confidentiality is governed by 35 U.S.C. 122 and 37 CFR 1.11 and 1.14. This collection is estimated to take 1 hour to complete, including gathering, preparing, and submitting the completed application form to the USPTO. Time will vary depending upon the individual case. Any comments on the amount of time you require to complete this form and/ or suggestions for reducing this burden, should be sent to the Chief Information Officer, U.S. Patent and Trademark Office, U.S. Department of Commerce, P.O. Box 1450, Alexandria, VA 22313-1450. DO NOT SEND FEES OR COMPLETED FORMS TO THIS ADDRESS. **This form can only be used when in conjunction with EFS-Web. If this form is mailed to the USPTO, it may cause delays in reinstating the patent.**

Privacy Act Statement

The Privacy Act of 1974 (P.L. 93-579) requires that you be given certain information in connection with your submission of the attached form related to a patent application or patent. Accordingly, pursuant to the requirements of the Act, please be advised that: (1) the general authority for the collection of this information is 35 U.S.C. 2(b)(2); (2) furnishing of the information solicited is voluntary; and (3) the principal purpose for which the information is used by the U.S. Patent and Trademark Office is to process and/or examine your submission related to a patent application or patent. If you do not furnish the requested information, the U.S. Patent and Trademark Office may not be able to process and/or examine your submission, which may result in termination of proceedings or abandonment of the application or expiration of the patent.

The information provided by you in this form will be subject to the following routine uses:

1. The information on this form will be treated confidentially to the extent allowed under the Freedom of Information Act (5 U.S.C. 552) and the Privacy Act (5 U.S.C. 552a). Records from this system of records may be disclosed to the Department of Justice to determine whether the Freedom of Information Act requires disclosure of these records.

2. A record from this system of records may be disclosed, as a routine use, in the course of presenting evidence to a court, magistrate, or administrative tribunal, including disclosures to opposing counsel in the course of settlement negotiations.

3. A record in this system of records may be disclosed, as a routine use, to a Member of Congress submitting a request involving an individual, to whom the record pertains, when the individual has requested assistance from the Member with respect to the subject matter of the record.

4. A record in this system of records may be disclosed, as a routine use, to a contractor of the Agency having need for the information in order to perform a contract. Recipients of information shall be required to comply with the requirements of the Privacy Act of 1974, as amended, pursuant to 5 U.S.C. 552a(m).

5. A record related to an International Application filed under the Patent Cooperation Treaty in this system of records may be disclosed, as a routine use, to the International Bureau of the World Intellectual Property Organization, pursuant to the Patent Cooperation Treaty.

6. A record in this system of records may be disclosed, as a routine use, to another federal agency for purposes of National Security review (35 U.S.C. 181) and for review pursuant to the Atomic Energy Act (42 U.S.C. 218(c)).

7. A record from this system of records may be disclosed, as a routine use, to the Administrator, General Services, or his/her designee, during an inspection of records conducted by GSA as part of that agency's responsibility to recommend improvements in records management practices and programs, under authority of 44 U.S.C. 2904 and 2906. Such disclosure shall be made in accordance with the GSA regulations governing inspection of records for this purpose, and any other relevant (i.e., GSA or Commerce) directive. Such disclosure shall not be used to make determinations about individuals.

8. A record from this system of records may be disclosed, as a routine use, to the public after either publication of the application pursuant to 35 U.S.C. 122(b) or issuance of a patent pursuant to 35 U.S.C. 151. Further, a record may be disclosed, subject to the limitations of 37 CFR 1.14, as a routine use, to the public if the record was filed in an application which became abandoned or in which the proceedings were terminated and which application is referenced by either a published application, an application open to public inspections or an issued patent.

9. A record from this system of records may be disclosed, as a routine use, to a Federal, State, or local law enforcement agency, if the USPTO becomes aware of a violation or potential violation of law or regulation.

UNITED STATES PATENT AND TRADEMARK OFFICE

Commissioner for Patents
United States Patent and Trademark Office
P.O. Box 1450
Alexandria, VA 22313-1450
www.uspto.gov

In re Patent No. 6655896
Issue Date: December 2,2003
Application No. 09772897
Filed: January 31,2001
Attorney Docket No. BHT/3136/10

:DECISION GRANTING PETITION
:UNDER 37 CFR 1.378(c)

This is a decision on the electronic petition, filed June 2,2009 ,under 37 CFR 1.378(c) to accept the unintentionally delayed payment of the 3.5 year maintenance fee for the above-identified patent.

The petition is **GRANTED**.

The maintenance fee is accepted, and the above-identified patent reinstated as of June 2,2009 . This decision also constitutes notice that the fee has been accepted. An electronic copy of the petition and this decision has been created as an entry in the Image File Wrapper. Nevertheless, petitioner should print and retain an independent copy.

Telephone inquiries related to this electronic decision should be directed to the Electronic Business Center at 1-866-217-9197.

UNITED STATES PATENT AND TRADEMARK OFFICE

Commissioner for Patents
United States Patent and Trademark Office
P.O. Box 1450
Alexandria, VA 22313-1450
www.uspto.gov

TROUTMAN SANDERS LLP
600 PEACHTREE STREET, NE
ATLANTA, GA 30308

COPY MAILED

MAY 30 2007

OFFICE OF PETITIONS

In re Application of	:	
Shvat Shaked et al	:	
Application No. 09/772,951	:	ON PETITION
Filed: January 31, 2001	:	
Attorney Docket No. P-2977-US	:	

This is a decision on the petition under 37 CFR 1.137(b), filed January 5, 2007, to revive the above-identified application.

The petition is **GRANTED**.

The above-identified application became abandoned for failure to reply in a timely manner to the Office action mailed December 28, 2005, which set a shortened statutory period for reply of one (1) month or thirty (30) days (whichever is later). No extensions of time under the provisions of 37 CFR 1.136(a) were obtained. Accordingly, the above-identified application became abandoned on January 29, 2006.

Telephone inquiries concerning this decision should be directed to Irvin Dingle at (571) 272-3210.

This matter is being referred to Technology Center AU 3624 for further processing.

Irvin Dingle
Petitions Examiner
Office of Petitions

UNITED STATES PATENT AND TRADEMARK OFFICE

Commissioner for Patents
United States Patent and Trademark Office
P.O. Box 1450
Alexandria, VA 22313-1450
www.uspto.gov

NIXON & VANDERHYE, P.C.
1100 NORTH GLEBE ROAD, 8TH FLOOR
ARLINGTON, VA 22201-4714

COPY MAILED

MAR 3 0 2004

OFFICE OF PETITIONS

In re Application of :
Paul W. Donahue et al :
Application No. 09/772,958 :
Filed: January 31, 2001 :
Attorney Docket No. 3593-17

ON PETITION

This is a decision on the petition, filed March 26, 2004, under 37 CFR 1.313(c)(2) to withdraw the above-identified application from issue after payment of the issue fee.

The petition is **GRANTED**.

The above-identified application is withdrawn from issue for consideration of a submission under 37 CFR 1.114 (request for continued examination). See 37 CFR 1.313(c)(2).

Petitioner is advised that the issue fee paid on November 25, 2003 in the above-identified application cannot be refunded. If, however, the above-identified application is again allowed, petitioner may request that it be applied towards the issue fee required by the new Notice of Allowance.[1]

Telephone inquiries should be directed to Irvin Dingle at (703) 306-5684.

The file will be forwarded to Technology Center AU 2666 for processing of the request for continued examination under 37 CFR 1.114 and for consideration of the concurrently filed Information Disclosure Statement.

Irvin Dingle
Petitions Examiner
Office of Petitions
Office of the Deputy Commissioner
for Patent Examination Policy

---

[1] The request to apply the issue fee to the new Notice may be satisfied by completing and returning the new Issue Fee Transmittal Form PTOL-85(b), which includes the following language thereon: "Commissioner for Patents is requested to apply the Issue Fee and Publication Fee (if any) or re-apply any previously paid issue fee to the application identified above." Petitioner is advised that, whether a fee is indicated as being due or not, the Issue Fee Transmittal Form **must** be completed and timely submitted to avoid abandonment. Note the language in bold text on the first page of the Notice of Allowance and Fee(s) Due (PTOL-85).

UNITED STATES PATENT AND TRADEMARK OFFICE

COMMISSIONER FOR PATENTS
UNITED STATES PATENT AND TRADEMARK OFFICE
WASHINGTON, DC 20231
www.uspto.gov

MAIL Paper No. 6

SEP 2 7 2002

DIRECTOR OFFICE
TECHNOLOGY CENTER 2600

SWIDLER BERLIN SHEREFF FRIEDMAN, LLP
3000 K STREET, NW
BOX IP
WASHINGTON DC 20007

In re Application of:
Joe Teixeira
Application No. 09/772,959
Filed: January 31, 2001
For: SYSTEM AND METHOD FOR SWITCHING DIGITAL SUBSCRIBER LINE

DECISION ON PETITION TO MAKE SPECIAL

This is a decision on the petition filed August 22, 2002 under Manual of Patent Examination Procedure §708.02, VIII requesting accelerated examination.

The petition under Manual of Patent Examination Procedure §708.02, VIII, must:
(1) be filed prior to receiving any examination by the examiner,
(2) be accompanied by the required fee- $130,
(3) the claims should be directed to a single invention (if it is determined that the claims pertain to more than one invention, then applicant will have to make an election without traverse or forfeit accelerated examination status),
(4) state that a pre-examination search was made, and fully discuss the search method employed, such as classes and subclasses searched, publications, Chemical abstracts, patents, etc. A search made by a foreign patent office satisfies this requirement,
(5) be accompanied by a copy of each of the references most closely related to the subject matter encompassed by the claims if said references are not already of record,
(6) fully discuss the references, pointing out with the particularity required by 37 C.F.R. §1.111(b) and (c), how the claimed subject matter is patentable over the references.

The petition meets all the above-listed requirements. Accordingly, the petition is **GRANTED**.

The application will retain its special status throughout its entire prosecution, including any appeal to the Board of Patent Appeals and Interferences, subject only to diligent prosecution by the applicant. After mailing, the application will be forwarded to the examiner for immediate handling.

Reinhard J. Eisenzopf
Special Program Examiner
Technology Center 2600
Communications
(703) 305-4711

UNITED STATES PATENT AND TRADEMARK OFFICE

Commissioner for Patents
United States Patent and Trademark Office
P.O. Box 1450
Alexandria, VA 22313-1450
www.uspto.gov

BINGHAM MCCUTCHEN LLP
2020 K STREET, N.W.
INTELLECTUAL PROPERTY DEPARTMENT
WASHINGTON DC 20006

COPY MAILED

JUN 2 0 2008

OFFICE OF PETITIONS

In re Application of	:	
Joe TEIXEIRA	:	
Application No. 09/772,959	:	DECISION ON PETITION
Filed: January 31, 2001	:	
Attorney Docket No. **7059542001**	:	

This is a decision on the petition under the unintentional provisions of 37 CFR 1.137(b), filed February 28, 2008, to revive the above-identified application.

The petition is **DISMISSED**.

Any request for reconsideration of this decision must be submitted within TWO (2) MONTHS from the mail date of this decision. Extensions of time under 37 CFR 1.136(a) are permitted. The reconsideration request should include a cover letter entitled "Renewed Petition under 37 CFR 1.137(b)." This is **not** a final agency action within the meaning of 5 U.S.C. § 704.

The application became abandoned for failure to timely file a reply within the meaning of 37 CFR 1.113 to the final Office action of January 05, 2007. The proposed reply required for consideration of a petition to revive must be a Notice of Appeal (and appeal fee required by 37 CFR 41.20(b)(2), an amendment that prima facie places the application in condition for allowance, a Request for Continued Examination and submission (37 CFR 1.114), or the filing of a continuing application under 37 CFR 1.53(b). See MPEP 711.03(c)(III)(A)(2). No extensions of time under 37 CFR 1.136 were timely obtained. Accordingly, the date of abandonment of this application is April 06, 2007.

A grantable petition under 37 CFR 1.137(b) must be accompanied by: (1) the required reply, unless previously filed; (2) the petition fee as set forth in 37 CFR 1.17(m); (3) a statement that the entire delay in filing the required reply from the due date for the reply until the filing of a grantable petition pursuant to 37 CFR 1.137(b) was unintentional; and (4) any terminal disclaimer (and fee as set forth in 37 CFR 1.20(d)) required by 37 CFR 1.137(d). Where there is a question as to whether either the abandonment or the delay in filing a petition under 37 CFR 1.137 was unintentional, the Director may require additional information. See MPEP 711.03(c)(II)(C) and (D). The instant petition lacks item(s) (3) in that statement about the delay being unintentional included with the petition is not acceptable. The unintentional delay statement by attorney Bertin is silent as to the nature of delay from the date the replay was due until the filing of a grantable petition. The petitioner is urged to consider using the form PTO/SB/64 available at www.uspto.gov.

An extension of time under 37 CFR 1.136 must be filed prior to the expiration of the maximum extendable period for reply. See In re Application of S., 8 USPQ2d 1630, 1631 (Comm'r Pats. 1988).

Since the $525 extension of time fee submitted with the petition on February 28, 2008 was subsequent to the maximum extendable period for reply, this fee is unnecessary and will be credited to petitioner's deposit account.

It is not apparent whether the person signing the statement of unintentional delay was in a position to have firsthand or direct knowledge of the facts and circumstances of the delay at issue. Nevertheless, such statement is being treated as having been made as the result of a reasonable inquiry into the facts and circumstances of such delay. See 37 CFR 10.18(b) and Changes to Patent Practice and Procedure; Final Rule Notice, 62 Fed. Reg. 53131, 53178 (October 10, 1997), 1203 Off. Gaz. Pat. Office 63, 103 (October 21, 1997). In the event that such an inquiry has not been made, petitioner must make such an inquiry. If such inquiry results in the discovery that it is not correct that the entire delay in filing the required reply from the due date for the reply until the filing of a grantable petition pursuant to 37 CFR 1.137(b) was unintentional, petitioner must notify the Office.

Further correspondence with respect to this matter should be addressed as follows:

By Mail: Mail Stop PETITION
Commissioner for Patents
P. O. Box 1450
Alexandria, VA 22313-1450

By hand: U. S. Patent and Trademark Office
Customer Service Window, Mail Stop Petitions
Randolph Building
401 Dulany Street
Alexandria, VA 22314

The centralized facsimile number is **(571) 273-8300.**
Telephone inquiries concerning this decision should be directed to Tredelle Jackson at (571) 272-2783.

Ramesh Krishnamurthy

Ramesh Krishnamurthy
Petitions Examiner
Office of Petitions

UNITED STATES PATENT AND TRADEMARK OFFICE

Commissioner for Patents
United States Patent and Trademark Office
P.O. Box 1450
Alexandria, VA 22313-1450
www.uspto.gov

BINGHAM MCCUTCHEN LLP
2020 K STREET, N.W.
INTELLECTUAL PROPERTY DEPARTMENT
WASHINGTON DC 20006

COPY MAILED

SEP 30 2008

OFFICE OF PETITIONS

In re Application of	:	
Joe TEIXEIRA	:	
Application No. 09/772,959	:	DECISION ON PETITION
Filed: January 31, 2001	:	
Attorney Docket No. **7059542001**	:	

This is a decision on the renewed petition under the unintentional provisions of 37 CFR 1.137(b), filed August 15, 2008, to revive the above-identified application.

The petition is **GRANTED**.

The application became abandoned for failure to timely file a reply within the meaning of 37 CFR 1.113 to the final Office action of January 05, 2007. The proposed reply required for consideration of a petition to revive must be a Notice of Appeal (and appeal fee required by 37 CFR 41.20(b)(2), an amendment that *prima facie* places the application in condition for allowance, a Request for Continued Examination and submission (37 CFR 1.114), or the filing of a continuing application under 37 CFR 1.53(b). See MPEP 711.03(c)(III)(A)(2). A three (3) months extension of time pursuant to the provisions of 37 CFR 1.136(a) was obtained. Accordingly, the date of abandonment of this application is April 06, 2007.

The petition satisfies the requirements of 37 CFR 1.137(b) in that petitioner has supplied (1) the reply in the form of a Request for Continued Examination (RCE) and fee of $405, and the submission required by 37 CFR 1.114; (2) the petition fee of $770; and (3) a proper statement of unintentional delay.

It is not apparent whether the person signing the statement of unintentional delay was in a position to have firsthand or direct knowledge of the facts and circumstances of the delay at issue. Nevertheless, such statement is being treated as having been made as the result of a reasonable inquiry into the facts and circumstances of such delay. See 37 CFR 10.18(b) and Changes to Patent Practice and Procedure; Final Rule Notice, 62 Fed. Reg. 53131, 53178

(October 10, 1997), 1203 Off. Gaz. Pat. Office 63, 103 (October 21, 1997). In the event that such an inquiry has not been made, petitioner must make such an inquiry. If such inquiry results in the discovery that it is not correct that the entire delay in filing the required reply from the due date for the reply until the filing of a grantable petition pursuant to 37 CFR 1.137(b) was unintentional, petitioner must notify the Office.

Telephone inquiries concerning this decision should be directed to Tredelle Jackson at (571) 272-2783.

This application is being referred to Technology Center AU 2616 for processing of the RCE and for appropriate action by the Examiner in the normal course of business on the amendment submitted in accordance with 37 CFR 1.114.

Ramesh Krishnamurthy

Ramesh Krishnamurthy
Petitions Examiner
Office of Petitions

NOTICE RE: CERTIFICATES OF CORRECTION

DATE : 1-29-03

Paper No.: _____

TO : Supervisor, Art Unit 3700

SUBJECT : Certificate of Correction Request in Patent No.: 6470844

A response to the following question is requested with respect to the accompanying request for a certificate of correction.

With respect to the change(s) requested, correcting Office and/or Applicant's errors, should the pa: read as shown in the certificate of correction? No new matter should be introduced, nor should the scope meaning of the claims be changed.

PLEASE COMPLETE THIS FORM AND
RETURN WITH FILE, WITHIN 7 DAYS,
TO CERTIFICATES OF CORRECTION BRANCH - PK 3-915/922
PALM LOCATION 7580 - TEL. N0. 305-8309

THANK YOU FOR YOUR ASSISTANCE!

Note your decision, regarding the changes requested in the Request for Certificate of Correction, l placing a check mark (✓) in the box that reflects your decision, which corresponds to the question checke above.

☑ YES ☐ NO ☐ Comments below

OK

☐ Comments:

Henry C. Yuen
Supervisory Patent Examiner
Group 3700

Supervisor

3787

Art Unit

PTOL-306 (REV. 10/87)

U.S. DEPARTMENT OF COMMERCE Patent and Tradema

UNITED STATES PATENT AND TRADEMARK OFFICE

Commissioner for Patents
United States Patent and Trademark Office
P.O. Box 1450
Alexandria, VA 22313-1450
www.uspto.gov

LADAS & PARRY
26 WEST 61ST STREET
NEW YORK NY 10023

COPY MAILED

JAN 23 2007

OFFICE OF PETITIONS

NOTICE

In re Patent No. 7,047,033 :
Issue Date: May 16, 2006 :
Application No. 09/773,098 :
Filed: January 31, 2001 :
Attorney Docket No.: U 013244-1 :

This is a notice regarding your request for acceptance of a fee deficiency submission under 37 CFR 1.28. On September 1, 1998, the Court of Appeals for the Federal Circuit held that 37 CFR 1.28(c) is the sole provision governing the time for correction of the erroneous payment of the issue fee as a small entity. **See DH Technology v. Synergystex International, Inc. 154 F.3d 1333, 47 USPQ2d 1865 (Fed. Cir. Sept. 1, 1998).**

The Office no longer investigates or rejects original or reissue applications under 37 CFR 1.56. **1098 Off. Gaz. Pat. Office 502 (January 3, 1989)**. Therefore, nothing in this Notice is intended to imply that an investigation was done.

Your fee deficiency submission under 37 CFR 1.28 is hereby **ACCEPTED**.

This application is no longer entitled to small entity status. Accordingly, all future fees paid in this application must be paid at the large entity rate.

Inquiries related to this communication should be directed to the undersigned at (571) 272-3230.

Shirene Willis Brantley

Shirene Willis Brantley
Senior Petitions Attorney
Office of Petitions

PTO/SB/66 (03-09)
Approved for use through 03/31/2012. OMB 0651-0016
U.S. Patent and Trademark Office: U.S. DEPARTMENT OF COMMERCE
Under the Paperwork Reduction Act of 1995, no persons are required to respond to a collection of information unless it displays valid OMB control number.

PETITION TO ACCEPT UNINTENTIONALLY DELAYED PAYMENT OF MAINTENANCE FEE IN AN EXPIRED PATENT (37 CFR 1.378(c))

Patent Number	Issue Date (YYYY-MM-DD)	Application Number	Filing Date (YYYY-MM-DD)	Docket Number (if applicable)
6351099	2002-02-26	09773112	2001-01-31	20661-0742USC1

CAUTION: Maintenance fee (and surcharge, if any) payment must correctly identify: (1) the patent number and (2) the application number of the actual U.S. application leading to issuance of that patent to ensure the fee(s) is/are associated with the correct patent. 37 CFR 1.366(c) and (d).

SMALL ENTITY
☐ Patentee claims, or has previously claimed, small entity status. See 37 CFR 1.27.

LOSS OF ENTITLEMENT TO SMALL ENTITY STATUS
☐ Patentee is no longer entitled to small entity status. See 37 CFR 1.27(g)

NOT Small Entity		Small Entity	
Fee	Code	Fee	Code
○ 3 ½ year	(1551)	○ 3 ½ year	(2551)
◉ 7 ½ year	(1552)	○ 7 ½ year	(2552)
○ 11 ½ year	(1553)	○ 11 ½ year	(2553)

SURCHARGE
The surcharge required by 37 CFR 1.20(i)(2) (Fee Code 1558) must be paid as a condition of accepting unintentionally delayed payment of the maintenance fee.

MAINTENANCE FEE (37 CFR 1.20(e)-(g))
The appropriate maintenance fee must be submitted with this petition.

STATEMENT
THE UNDERSIGNED CERTIFIES THAT THE DELAY IN PAYMENT OF THE MAINTENANCE FEE TO THIS PATENT WAS UNINTENTIONAL

PETITIONER(S) REQUEST THAT THE DELAYED PAYMENT OF THE MAINTENANCE FEE BE ACCEPTED AND THE PATENT REINSTATED

THIS PORTION MUST BE COMPLETED BY THE SIGNATORY OR SIGNATORIES

37 CFR 1.378(d) states: "Any petition under this section must be signed by an attorney or agent registered to practice before the Patent and Trademark Office, or by the patentee, the assignee, or other party in interest."

I certify, in accordance with 37 CFR 1.4(d)(4) that I am

◉ An attorney or agent registered to practice before the Patent and Trademark Office

○ A sole patentee

○ A joint patentee; I certify that I am authorized to sign this submission on behalf of all the other patentees.

○ A joint patentee; all of whom are signing this e-petition

○ The assignee of record of the entire interest

Patent Practitioner			
A signature of the applicant or representative is required in accordance with 37 CFR 1.33 and 10.18. Please see 37 CFR 1.4(d) for the form of the signature			
Signature	/Michael North/	Date (YYYY-MM-DD)	2010-03-29
Name	Michael North	Registration Number	46963

This collection of information is required by 37 CFR 1.378(c). The information is required to obtain or retain a benefit by the public which is to file (and by the USPTO to process) an application. Confidentiality is governed by 35 U.S.C. 122 and 37 CFR 1.11 and 1.14. This collection is estimated to take 1 hour to complete, including gathering, preparing, and submitting the completed application form to the USPTO. Time will vary depending upon the individual case. Any comments on the amount of time you require to complete this form and/or suggestions for reducing this burden, should be sent to the Chief Information Officer, U.S. Patent and Trademark Office, U.S. Department of Commerce, P.O. Box 1450, Alexandria, VA 22313-1450. DO NOT SEND FEES OR COMPLETED FORMS TO THIS ADDRESS. **This form can only be used when in conjunction with EFS-Web. If this form is mailed to the USPTO, it may cause delays in reinstating the patent.**

Privacy Act Statement

The Privacy Act of 1974 (P.L. 93-579) requires that you be given certain information in connection with your submission of the attached form related to a patent application or patent. Accordingly, pursuant to the requirements of the Act, please be advised that: (1) the general authority for the collection of this information is 35 U.S.C. 2(b)(2); (2) furnishing of the information solicited is voluntary; and (3) the principal purpose for which the information is used by the U.S. Patent and Trademark Office is to process and/or examine your submission related to a patent application or patent. If you do not furnish the requested information, the U.S. Patent and Trademark Office may not be able to process and/or examine your submission, which may result in termination of proceedings or abandonment of the application or expiration of the patent.

The information provided by you in this form will be subject to the following routine uses:

1. The information on this form will be treated confidentially to the extent allowed under the Freedom of Information Act (5 U.S.C. 552) and the Privacy Act (5 U.S.C. 552a). Records from this system of records may be disclosed to the Department of Justice to determine whether the Freedom of Information Act requires disclosure of these records.

2. A record from this system of records may be disclosed, as a routine use, in the course of presenting evidence to a court, magistrate, or administrative tribunal, including disclosures to opposing counsel in the course of settlement negotiations.

3. A record in this system of records may be disclosed, as a routine use, to a Member of Congress submitting a request involving an individual, to whom the record pertains, when the individual has requested assistance from the Member with respect to the subject matter of the record.

4. A record in this system of records may be disclosed, as a routine use, to a contractor of the Agency having need for the information in order to perform a contract. Recipients of information shall be required to comply with the requirements of the Privacy Act of 1974, as amended, pursuant to 5 U.S.C. 552a(m).

5. A record related to an International Application filed under the Patent Cooperation Treaty in this system of records may be disclosed, as a routine use, to the International Bureau of the World Intellectual Property Organization, pursuant to the Patent Cooperation Treaty.

6. A record in this system of records may be disclosed, as a routine use, to another federal agency for purposes of National Security review (35 U.S.C. 181) and for review pursuant to the Atomic Energy Act (42 U.S.C. 218(c)).

7. A record from this system of records may be disclosed, as a routine use, to the Administrator, General Services, or his/her designee, during an inspection of records conducted by GSA as part of that agency's responsibility to recommend improvements in records management practices and programs, under authority of 44 U.S.C. 2904 and 2906. Such disclosure shall be made in accordance with the GSA regulations governing inspection of records for this purpose, and any other relevant (i.e., GSA or Commerce) directive. Such disclosure shall not be used to make determinations about individuals.

8. A record from this system of records may be disclosed, as a routine use, to the public after either publication of the application pursuant to 35 U.S.C. 122(b) or issuance of a patent pursuant to 35 U.S.C. 151. Further, a record may be disclosed, subject to the limitations of 37 CFR 1.14, as a routine use, to the public if the record was filed in an application which became abandoned or in which the proceedings were terminated and which application is referenced by either a published application, an application open to public inspections or an issued patent.

9. A record from this system of records may be disclosed, as a routine use, to a Federal, State, or local law enforcement agency, if the USPTO becomes aware of a violation or potential violation of law or regulation.

UNITED STATES PATENT AND TRADEMARK OFFICE

Commissioner for Patents
United States Patent and Trademark Office
P.O. Box 1450
Alexandria, VA 22313-1450
www.uspto.gov

In re Patent No. 6351099
Issue Date: February 26,2002
Application No. 09773112
Filed: January 31,2001
Attorney Docket No. 20661-742USC1

:
:DECISION GRANTING PETITION
:UNDER 37 CFR 1.378(c)
:

This is a decision on the electronic petition, filed March 29,2010 ,under 37 CFR 1.378(c) to accept the unintentionally delayed payment of the 7.5 year maintenance fee for the above-identified patent.

The petition is **GRANTED**.

The maintenance fee is accepted, and the above-identified patent reinstated as of March 29,2010 . This decision also constitutes notice that the fee has been accepted. An electronic copy of the petition and this decision has been created as an entry in the Image File Wrapper. Nevertheless, petitioner should print and retain an independent copy.

Telephone inquiries related to this electronic decision should be directed to the Electronic Business Center at 1-866-217-9197.

UNITED STATES PATENT AND TRADEMARK OFFICE

Commissioner for Patents
United States Patent and Trademark Office
P. O. Box 1450
Alexandria, VA 22313-1450
www.uspto.gov

Paper No. 12

Foley Hoag, LLP
Patent Group, World Trade Center West
155 Seaport Boulevard
Boston, MA 02110

COPY MAILED

JUN 26 2003

OFFICE OF PETITIONS

In re Application of Derek M. Dempsey, et al. Application No. 09/773,115 Filed: January 31, 2001 Attorney Docket No. CEO-010.01	: : : : :	DECISION GRANTING PETITION UNDER 37 CFR 1.137(b)

This is a decision on the petition filed May 21, 2003, under 37 CFR 1.137(f) which is being treated under the unintentional provisions of 37 CFR 1.137(b), to revive the instant nonprovisional application.

The petition is **DISMISSED AS MOOT**.

If an applicant makes a nonpublication request and then rescinds the nonpublication request before or on the date a counterpart application is filed in an eighteen-month publication country, the application will be treated as if the nonpublication request were never made. In the instant application, a notice to rescind was filed prior to the filing date of the foreign filing. See 35 U.S.C. § 122(b)(2)(B)(ii).

In view thereof, the petition fee of $1300 will not be charged to petitioner's deposit account as authorized.

Telephone inquiries concerning this decision should be directed to the undersigned at (703) 306-3475.

This application is being forwarded to Technology Center Art Unit 2167 for examination in due course.

Marianne E. Morgan
Petitions Examiner
Office of Petitions
Office of the Deputy Commissioner
for Patent Examination Policy

UNITED STATES PATENT AND TRADEMARK OFFICE

COMMISSIONER FOR PATENTS
UNITED STATES PATENT AND TRADEMARK OFFICE
P.O. BOX 1450
ALEXANDRIA, VA 22313-1450
www.uspto.gov

MAIL

Paper No. 14

FOLEY HOAG, LLP
PATENT GROUP, WORLD TRADE CENTER WEST
155 SEAPORT BLVD
BOSTON MA 02110

FEB 0 8 2005

DIRECTOR OFFICE
TECHNOLOGY CENTER 2100

In re Application of: Dempsey, et al.	)	
Application No. 09/773,116	)	**DECISION ON PETITION TO**
Attorney Docket No. CEO-011.01	)	**WITHDRAW HOLDING OF**
Filed: January 31, 2001	)	**ABANDONMENT UNDER 37 CFR**
For: RETRAINING TRAINABLE DATA	)	**§1.181**
CLASSIFIERS	)	

This is a decision on the petition, filed September 28, 2004, requesting the Withdrawal of the Holding of Abandonment of the above-identified application, which has been treated as a petition under 37 CFR §1.181.

The application was abandoned for failure to file a timely response to the Office action mailed on December 4, 2003. Notice of Abandonment was mailed September 24, 2004.

37 C.F.R. § 1.8(b) states:

> (b) In the event that correspondence is considered timely filed by being mailed or transmitted in accordance with paragraph (a) of this section, but not received in the Patent and Trademark Office, and the application is held to be abandoned or the proceeding is dismissed, terminated, or decided with prejudice, the correspondence will be considered timely if the party who forwarded such correspondence:
>
> (1) Informs the Office of the previous mailing or transmission of the correspondence promptly after becoming aware that the Office has no evidence of receipt of the correspondence;
>
> (2) Supplies an additional copy of the previously mailed or transmitted correspondence and certificate; and
>
> (3) Includes a statement which attests on a personal knowledge basis or to the satisfaction of the Director to the previous timely mailing or transmission. If the correspondence was sent by facsimile transmission, a copy of the sending unit's report confirming transmission may be used to support this statement.

In support of the petition, Petitioner provides a facsimile cover sheet showing the following were submitted in the facsimile transmission:

1) a 12 page amendment response
2) a 1 page Letter to the Official Draftsperson along with 3 pages of formal drawings
3) a 1 page Petition for Extension of Time for 2 months and
4) a 2 page IDS, 1 page PTO-1449, including references AE (8 pages), AF (24 pages), AG (39 pages), and AH (4 pages).

Of the documents listed on the cover sheet, Petitioner has only submitted the amendment and response (12 pages); a Petition for Extension of Time (1 page); and a Letter to the Official Draftsperson (1 Page) along with drawings (3 pages). Petitioner has failed to resubmit the Information Disclosure Statement along with the references sent in the facsimile transmission on May 4, 2004. On January 19, 2005, Petitioner was informed of the need to resubmit the missing items in order for the Information Disclosure Statement and the references to be considered timely filed and to ensure timely consideration of the material by the examiner. Petitioner had previously provided a supplemental petition to include the Information Disclosure Statement and references on January 18, 2005.

Further in support of the petition, Petitioner has provided a copy of the "transmittal document" bearing a certificate of transmission by facsimile signed by Kevin A. Oliver dated May 4, 2004, and a copy of an auto-reply response to the facsimile transmission from the United States Patent and Trademark Office acknowledging that 94 pages were received on May 4, 2004. The auto-reply obviates the need for the personal knowledge statement of transmission as it provides the proof of actual receipt.

Petitioner has established that a response to the office action was filed on May 4, 2004 with the requisite fees for a 2-month extension of time necessary for the response to be considered timely.

Accordingly, the petition is **GRANTED**. The Notice of Abandonment is **VACATED.**

The application file is being forwarded to the technical support staff to withdraw the holding of abandonment and for charging $420.00 to Deposit Account Number 06-1448 for the two-month extension of time. Subsequently, the application file will be forwarded to the examiner for consideration of the response.

Brian L. Johnson
Special Programs Examiner
Technology Center 2100
Computer Architecture, Software, and Information Security
571-272-3595

2/7/05

MBS

UNITED STATES PATENT AND TRADEMARK OFFICE

Commissioner for Patents
United States Patent and Trademark Office
P.O. Box 1450
Alexandria, VA 22313-1450
www.uspto.gov

JUN 2 3 2004

In re Application of	:	
Michel Marcel Jose Decre	:	NOTICE OF WITHDRAWAL
Serial No. 09/773,131	:	FROM ISSUE
Filed: January 31, 20001	:	UNDER 37 CFR 1.313(b)
For: METHOD OF MANUFACTURING A	:	
CIRCULAR OPTICAL STORAGE DISC AND	:	
CIRCULAR OPTICAL STORAGE DISC	:	

The above-identified application is withdrawn from issue after payment of the issue fee due to reopening of prosecution. See 37 CFR 1.313 (b).

The above-identified application is hereby withdrawn from issue.

The issue fee is refundable upon written request. If, however, the application is again found allowable, the issue fee can be applied toward payment of the issue fee in the amount identified on the new Notice of Allowance and Issue Fee Due upon written request. This request and any balance due must be received on or before the due date noted in the new Notice of Allowance in order to prevent abandonment of the application.

Telephone inquiries should be directed to at Shrive Beck (571) 272-1415.

The above-identified application is being forwarded to the examiner for prompt appropriate action, including notifying applicant of the new status of this application.

Jacqueline M. Stone

Jacqueline Stone, Director
Technology Center 1700
Chemical and Materials Engineering

Philips Intellectual Property & Standards
PO Box 3001
Briarcliff Manor, NY 10510

cc: Allowed Files—Pk3-915

US 097193260SP1

Creation date: 08-10-2004
Indexing Officer: ICHUM - ISABELLE CHUM
Team: OIPEBackFileIndexing
Dossier: 09719326

Legal Date: 07-19-2004

No.	Doccode	Number of pages
1	WFEE	1

Total number of pages: 1

Remarks:

Order of re-scan issued on .....

UNITED STATES PATENT AND TRADEMARK OFFICE

Commissioner for Patents
United States Patent and Trademark Office
P.O. Box 1450
Alexandria, VA 22313-1450
www.uspto.gov

JUN 2 3 2004

In re Application of Michel Marcel Jose Decre Serial No. 09/773,131 Filed: January 31, 20001 For: METHOD OF MANUFACTURING A CIRCULAR OPTICAL STORAGE DISC AND CIRCULAR OPTICAL STORAGE DISC	: : : : : : :	NOTICE OF WITHDRAWAL FROM ISSUE UNDER 37 CFR 1.313(b)

The above-identified application is withdrawn from issue after payment of the issue fee due to reopening of prosecution. See 37 CFR 1.313 (b).

The above-identified application is hereby withdrawn from issue.

The issue fee is refundable upon written request. If, however, the application is again found allowable, the issue fee can be applied toward payment of the issue fee in the amount identified on the new Notice of Allowance and Issue Fee Due upon written request. This request and any balance due must be received on or before the due date noted in the new Notice of Allowance in order to prevent abandonment of the application.

Telephone inquiries should be directed to at Shrive Beck (571) 272-1415.

The above-identified application is being forwarded to the examiner for prompt appropriate action, including notifying applicant of the new status of this application.

Jacqueline Stone, Director
Technology Center 1700
Chemical and Materials Engineering

Philips Intellectual Property & Standards
PO Box 3001
Briarcliff Manor, NY 10510

cc: Allowed Files—Pk3-915

UNITED STATES PATENT AND TRADEMARK OFFICE

COMMISSIONER FOR PATENTS
UNITED STATES PATENT AND TRADEMARK OFFICE
WASHINGTON, DC 20231
www.uspto.gov

MAILED

SEP 05 2001

DIRECTOR'S OFFICE
TECHNOLOGY CENTER 2100

Paper No. 6

DILWORTH PAXSON LLP
3200 MELLON BANK CENTER
1735 MARKET STREET
PHILADELPHIA, PA 19103

In re Application of: H. G. Otero et al.
Application No. 09/773,139
Filed: January 31, 2001
For: APPARATUS, METHODS AND ARTICLES OF MANUFACTURE FOR CONSTRUCTING AND EXECUTING COMPUTERIZED TRANSACTION PROCESSES AND PROGRAMS

DECISION ON PETITION TO MAKE SPECIAL

This is a decision on the petition filed January 31, 2001. While the petition is labeled "under MPEP §708.02 III", due to its content, the petition is being treated as under 37 C.F.R. §102(d) and M.P.E.P. § 708.02(VIII): Accelerated Examination, to make the above-identified application special.

M.P.E.P. § 708.02, Section VIII which sets out the prerequisites for a grantable petition for Accelerated Examination under 37 C.F.R. § 102(d) states in relevant part:

A new application (one which has not received any examination by the examiner) may be granted special status provided that applicant (and this term includes applicant's attorney or agent) complies with each of the following items:

(A) Submits a petition to make special accompanied by the fee set forth in 37 CFR 1.17(i);

(B) Presents all claims directed to a single invention, or if the Office determines that all the claims presented are not obviously directed to a single invention, will make an election without traverse as a prerequisite to the grant of special status...;

(C) Submits a statement(s) that a pre-examination search was made, listing the field of search by class and subclass, publication, Chemical Abstracts, foreign patents, etc. A search made by a foreign patent office satisfies this requirement;

(D) Submits one copy each of the references deemed most closely related to the subject matter encompassed by the claims if said references are not already of record; and

(E) Submits a detailed discussion of the references, which discussion points out, with the particularity required by 37 CFR 1.111 (b) and (c), how the claimed subject matter is patentable over the references.

In those instances where the request for this special status does not meet all the prerequisites set forth above, applicant will be notified and the defects in the request will be stated. The application will remain in the status of a new application awaiting action in its regular turn. In those instances where a request is defective in one or more respects, applicant will be given one opportunity to perfect the request in a renewed petition to make special. If perfected, the request will then be granted. If not perfected in the first renewed petition, any additional renewed petitions to make special may or may not be considered at the discretion of the Group Special Program Examiner.

Applicant's submission is deficient in that it does not comply with (B) and (E) above. With respect to (B), while petitioner states that applicants will make an election without traverse if the Office determines that all the claims are not directed to a single invention, the petition does not state that all the claims presented are directed to a single invention. With respect to (E), while applicant discusses the content of the references and argues that they do not disclose certain features, this discussion does not clearly show how the *claimed* subject matter is patentable over the references. The argued features do not cover all independent claims. For example, the argued feature used in the discussion of the references of implementing and customizing trading strategies or executing one or more trading strategies does not appear in claim 1. Claim 1 calls for two plug-ins for implementing a trading strategy, but the first plug-in is the only plug-in positively recited as implemented in the engine to execute a trade and is not described as being customized.

Accordingly, the Petition is **DENIED**. The application file is being forwarded to Central Files to await examination in its proper turn based on its effective filing date.

Any request for reconsideration must be filed within two months of the mailing date of this decision.

Robert A. Weinhardt
Special Program Examiner
Technology Center 2100
Computer Architecture, Software,
& Electronic Commerce
703-305-9780

UNITED STATES PATENT AND TRADEMARK OFFICE

COMMISSIONER FOR PATEN
UNITED STATES PATENT AND TRADEMARK OFFI
WASHINGTON, D.C. 2023
www.uspto.g

Paper No. 4

Dennis Fernandez, Esq.
FERNANDEZ & ASSOCIATES, LLP
PATENT ATTORNEYS
P.O. Box D
Menlo Park, CA 94026-6402

MAILED

AUG 1 8 2003

Technology Center 2100

In re Application of:	)	
Joisha, et al.	)	
Application No. 09/773,211	)	**DECISION ON REQUEST FOR**
Filed: January 30, 2001	)	**WITHDRAWAL AS ATTORNEY**
For: METHOD FOR ARRAY SHAPE INFERENCING FOR A CLASS OF FUNCTIONS IN MATLAB	)	

This is a decision on the Request To Withdraw from Representation filed July 21, 2003.

A grantable request to withdraw as attorney of record should indicate thereon the present mailing addresses of the attorney(s) who is/are withdrawing from the record and of the applicant. The request for withdrawal must be signed by every attorney seeking to withdraw or contain a clear indication that one attorney is signing on behalf of another/others. A request to withdraw will not be approved unless at least 30 (thirty) days would remain between the date of approval and the later of the expiration date of a time to file a response or the expiration date of the maximum time period which can be extended under 37 C.F.R. § 1. 136(a). The effective date of withdrawal being the date of decision and not the date of request. See M.P.E.P. § 402.06. 37 C.F.R. § 1.36 further requires that the applicant or patent owner be notified of the withdrawal of the attorney or agent.

The request filed July 21, 2003 meets all the requirements. Accordingly the request is **GRANTED**.

All future communications from the Office will be directed to the below-listed address until otherwise notified by applicant. This correspondence address is provided by the withdrawn attorney(s). Applicant is reminded of the obligation to promptly notify the Patent and Trademark Office (Office) of any change in correspondence address to ensure receipt of all communications from the Office.

James R. Matthews

for Vincent N. Trans
Special Programs Examiner
Technology Center 2100
Computer Architecture and Software
(703) 305-9750

cc: DEEPTI PANCHA WAGH-JAIN
3039 Calle De Las Estrella
San Jose, CA 95148

UNITED STATES PATENT AND TRADEMARK OFFICE

Commissioner for Patents
United States Patent and Trademark Office
P.O. Box 1450
Alexandria, VA 22313-1450
www.uspto.gov

IBM CORPORATION, T.J. WATSON RESEARCH CENTER
P.O. BOX 218
YORKTOWN HEIGHTS, NY 10598

COPY MAILED

SEP 20 2007

OFFICE OF PETITIONS

In re Application of	:	
Biran GIORA	:	
Application No. 09/773,227	:	DECISION ON PETITION
Filed: January 31, 2001	:	
Attorney Docket No. **CH9-2000-0065**	:	

This is a decision on the petition under 37 CFR 1.137(b), filed May 30, 2006, to revive the above-identified application.

The petition is **DISMISSED**.

Any request for reconsideration of this decision must be submitted within TWO (2) MONTHS from the mail date of this decision. Extensions of time under 37 CFR 1.136(a) are permitted. The reconsideration request should include a cover letter entitled "Renewed Petition under 37 CFR 1.137(b)." This is **not** a final agency action within the meaning of 5 U.S.C. § 704.

A grantable petition under 37 CFR 1.137(b) must be accompanied by: (1) the required reply, unless previously filed; (2) the petition fee as set forth in 37 CFR 1.17(m); (3) a statement that the entire delay in filing the required reply from the due date for the reply until the filing of a grantable petition pursuant to 37 CFR 1.137(b) was unintentional; and (4) any terminal disclaimer (and fee as set forth in 37 CFR 1.20(d)) required by 37 CFR 1.137(d). Where there is a question as to whether either the abandonment or the delay in filing a petition under 37 CFR 1.137 was unintentional, the Commissioner may require additional information. See MPEP 711.03(c)(III)(C) and (D). The instant petition lacks item(s) (1).

The application became abandoned for failure to reply in a timely manner to the non-final Office action mailed July 25, 2003, which set a shortened statutory period for reply of three (3) months. No extensions of time under the provisions of 37 CFR 1.136(a) were obtained. Accordingly, the application became abandoned on October 26, 2003. A Notice of Abandonment was mailed to applicant on March 25, 2004.

The office may require further information as to the cause of the delay between the date the applicant was first notified that the application was abandoned and the date a 37 CFR 1.137(b) petition was filed, and how such delay was "unintentional."

Further information as to when the applicant (or the applicant's representative) first became aware of the abandonment of the application; and a showing as to how the delay in discovering the abandoned status of the application occurred despite the exercise of due care or diligence on the part of the applicant (or applicant's representative).

The record indicates that Ronald L. Drumheller was responsible for prosecution of the application when the reply necessary to avoid abandonment was due. Therefore, petitioner must provide a statement from Ronald L. Drumheller explaining why action was not timely taken to prevent the application from becoming abandoned.

Petitioner is advised to send a letter (accompanied by a copy of this decision) to Ronald L. Drumheller, by certified or registered mail (return receipt requested) indicating that the U.S. Patent and Trademark Office (USPTO) is requesting assistance in ascertaining the cause of abandonment of the above-identified application, and that the USPTO is requesting that Ronald L. Drumheller provide within a specified period (e.g., one month) a statement setting forth why appropriate action was not timely taken to prevent the application from becoming abandoned. Petitioner is advised that, in the event that Ronald L. Drumheller does not provide such a statement, petitioner should submit a copy of such letter and a copy of the return receipt.

Further correspondence with respect to this matter should be addressed as follows:

By Mail: Mail Stop PETITION
Commissioner for Patents
P. O. Box 1450
Alexandria, VA 22313-1450

By hand: U. S. Patent and Trademark Office
Customer Service Window, Mail Stop Petitions
Randolph Building
401 Dulany Street
Alexandria, VA 22314

The centralized facsimile number is **(571) 273-8300.**

Application No. 09/773,227

Telephone inquiries concerning this decision should be directed to Tredelle Jackson at (571) 272-2783.

Amelia Au
Petitions Examiner
Office of Petitions

UNITED STATES PATENT AND TRADEMARK OFFICE

Commissioner for Patents
United States Patent and Trademark Office
P.O. Box 1450
Alexandria, VA 22313-1450
www.uspto.gov

IBM CORPORATION, T.J. WATSON RESEARCH CENTER
P.O. BOX 218
YORKTOWN HEIGHTS, NY 10598

COPY MAILED

APR 0 2 2008

OFFICE OF PETITIONS

In re Application of	:	
Biran GIORA	:	
Application No. 09/773,227	:	DECISION ON PETITION
Filed: January 31, 2001	:	
Attorney Docket No. **CH9-2000-0065**	:	

This is a decision on the renewed petition under 37 CFR 1.137(b), filed November 19, 2007, to revive the above-identified application.

The petition is **DISMISSED**.

Any request for reconsideration of this decision must be submitted within TWO (2) MONTHS from the mail date of this decision. Extensions of time under 37 CFR 1.136(a) are permitted. The reconsideration request should include a cover letter entitled "Renewed Petition under 37 CFR 1.137(b)." This is **not** a final agency action within the meaning of 5 U.S.C. § 704.

A grantable petition under 37 CFR 1.137(b) must be accompanied by: (1) the required reply, unless previously filed; (2) the petition fee as set forth in 37 CFR 1.17(m); (3) a statement that the entire delay in filing the required reply from the due date for the reply until the filing of a grantable petition pursuant to 37 CFR 1.137(b) was unintentional; and (4) any terminal disclaimer (and fee as set forth in 37 CFR 1.20(d)) required by 37 CFR 1.137(d). Where there is a question as to whether either the abandonment or the delay in filing a petition under 37 CFR 1.137 was unintentional, the Commissioner may require additional information. See MPEP 711.03(c)(III)(C) and (D). The instant petition lacks item(s) (1).

The application became abandoned for failure to reply in a timely manner to the non-final Office action mailed July 25, 2003, which set a shortened statutory period for reply of three (3) months. No extensions of time under the provisions of 37 CFR 1.136(a) were obtained. Accordingly, the application became abandoned on October 26, 2003. A Notice of Abandonment was mailed to applicant on March 25, 2004.

The office may require further information as to the cause of the delay between the date the applicant was first notified that the application was abandoned and the date a 37 CFR 1.137(b) petition was filed, and how such delay was "unintentional."

Further information as to when the applicant (or the applicant's representative) first became aware of the abandonment of the application; and a showing as to how the delay in discovering the abandoned status of the application occurred despite the exercise of due care or diligence on the part of the applicant (or applicant's representative).

The record indicates that Ronald L. Drumheller was responsible for prosecution of the application when the reply necessary to avoid abandonment was due. Therefore, petitioner must provide a statement from Ronald L. Drumheller explaining why action was not timely taken to prevent the application from becoming abandoned.

Further correspondence with respect to this matter should be addressed as follows:

By Mail: Mail Stop PETITION
Commissioner for Patents
P. O. Box 1450
Alexandria, VA 22313-1450

By hand: U. S. Patent and Trademark Office
Customer Service Window, Mail Stop Petitions
Randolph Building
401 Dulany Street
Alexandria, VA 22314

The centralized facsimile number is **(571) 273-8300.**

Telephone inquiries concerning this decision should be directed to Tredelle Jackson at (571) 272-2783.

David Bucci
Petitions Examiner
Office of Petitions

UNITED STATES PATENT AND TRADEMARK OFFICE

Commissioner for Patents
United States Patent and Trademark Office
P.O. Box 1450
Alexandria, VA 22313-1450
www.uspto.gov

IBM CORPORATION, T.J. WATSON RESEARCH CENTER
P.O. BOX 218
YORKTOWN HEIGHTS, NY 10598

COPY MAILED

SEP 25 2008

OFFICE OF PETITIONS

Paper No. 15

In re Application of	:	
Biran GIORA	:	
Application No. 09/773,227	:	DECISION ON PETITION
Filed: January 31, 2001	:	
Attorney Docket No. **CH9-2000-0065**	:	

This is a decision on the renewed petition under 37 CFR 1.137(b), filed June 02, 2008, to revive the above-identified application.

The petition is **DISMISSED**.

Any request for reconsideration of this decision must be submitted within TWO (2) MONTHS from the mail date of this decision. Extensions of time under 37 CFR 1.136(a) are permitted. The reconsideration request should include a cover letter entitled "Renewed Petition under 37 CFR 1.137(b)." This is **not** a final agency action within the meaning of 5 U.S.C. § 704.

The application became abandoned for failure to reply in a timely manner to the non-final Office action mailed July 25, 2003, which set a shortened statutory period for reply of three (3) months. No extensions of time under the provisions of 37 CFR 1.136(a) were obtained. Accordingly, the application became abandoned on October 26, 2003. A Notice of Abandonment was mailed to applicant on March 25, 2004.

A grantable petition under 37 CFR 1.137(b) must be accompanied by: (1) the required reply, unless previously filed; (2) the petition fee as set forth in 37 CFR 1.17(m); (3) a statement that the entire delay in filing the required reply from the due date for the reply until the filing of a grantable petition pursuant to 37 CFR 1.137(b) was unintentional; and (4) any terminal disclaimer (and fee as set forth in 37 CFR 1.20(d)) required by 37 CFR 1.137(d). Where there is a question as to whether either the abandonment or the delay in filing a petition under 37 CFR 1.137 was unintentional, the Commissioner may require additional information. See MPEP 711.03(c)(III)(C) and (D). The instant petition lacks item(s) (3).

The office may require further information as to the cause of the delay between the date the applicant was first notified that the application was abandoned and the date a 37 CFR 1.137(b) petition was filed, and how such delay was "unintentional."

The Dismissal dated April 02, 2008 and the subsequent letter from Attorney Cameron required Mr. Drumheller to provide an explanation as to why abandonment took place by October 26, 2003. The statement from Drumheller fails to proved details such as dates of the alleged lightning strike in Mr. Drumheller's office. Also, a copy of the communication of the letter referenced in the last paragraph of Mr. Drumheller's statement concerning an alleged directive from management, needs to be included with any further request for reconsideration of this decision.

Further correspondence with respect to this matter should be addressed as follows:

By Mail: Mail Stop PETITION
Commissioner for Patents
P. O. Box 1450
Alexandria, VA 22313-1450

By hand: U. S. Patent and Trademark Office
Customer Service Window, Mail Stop Petitions
Randolph Building
401 Dulany Street
Alexandria, VA 22314

The centralized facsimile number is **(571) 273-8300.**

Telephone inquiries concerning this decision should be directed to Tredelle Jackson at (571) 272-2783.

Ramesh Krishnamurthy

Ramesh Krishnamurthy
Petitions Examiner
Office of Petitions

UNITED STATES PATENT AND TRADEMARK OFFICE

Commissioner for Patents
United States Patent and Trademark Office
P.O. Box 1450
Alexandria, VA 22313-1450
www.uspto.gov

IBM CORPORATION, T.J. WATSON RESEARCH CENTER
P.O. BOX 218
YORKTOWN HEIGHTS, NY 10598

MAILED

JUN 30 2009

OFFICE OF PETITIONS

Paper No. 17

In re Application of
Biran GIORA
Application No. 09/773,227
Filed: January 31, 2001
Attorney Docket No. **CH9-2000-0065**

DECISION ON PETITION

This is a decision on the renewed petition under 37 CFR 1.137(b), filed November 25, 2008, to revive the above-identified application.

The petition is **DISMISSED**.

Any request for reconsideration of this decision must be submitted within TWO (2) MONTHS from the mail date of this decision. Extensions of time under 37 CFR 1.136(a) are permitted. The reconsideration request should include a cover letter entitled "Renewed Petition under 37 CFR 1.137(b)." This is **not** a final agency action within the meaning of 5 U.S.C. § 704.

The application became abandoned for failure to reply in a timely manner to the non-final Office action mailed July 25, 2003, which set a shortened statutory period for reply of three (3) months. No extensions of time under the provisions of 37 CFR 1.136(a) were obtained. Accordingly, the application became abandoned on October 26, 2003. A Notice of Abandonment was mailed to applicant on March 25, 2004.

A grantable petition under 37 CFR 1.137(b) must be accompanied by: (1) the required reply, unless previously filed; (2) the petition fee as set forth in 37 CFR 1.17(m); (3) a statement that the entire delay in filing the required reply from the due date for the reply until the filing of a grantable petition pursuant to 37 CFR 1.137(b) was unintentional; and (4) any terminal disclaimer (and fee as set forth in 37 CFR 1.20(d)) required by 37 CFR 1.137(d). Where there is a question as to whether either the abandonment or the delay in filing a petition under 37 CFR 1.137 was unintentional, the Commissioner may require additional information. See MPEP 711.03(c)(III)(C) and (D). The instant petition lacks item(s) (3).

It is noted that Drumheller's statement filed June 05, 2008, indicates the time of lighting strike to have been in 2003. The instant renewed petition states the lighting strike had to have occurred prior to September 21, 2001. These mutually contradictory dates for lighting strike are not properly

explained in the instant petition. Ascribing such a discrepancy in dates to medication induced memory problems cannot be accepted, absent any certification(s) from a physician directly familiar with the medical condition/treatment of Mr. Drumheller in the time period when the application became abandoned. The statement in the instant petition, that the Office Action of July 25, 2003 was either not received or misplaced by Mr. Drumheller, cannot be accepted without supporting evidence.

Further correspondence with respect to this matter should be addressed as follows:

By Mail: Mail Stop PETITION
Commissioner for Patents
P. O. Box 1450
Alexandria, VA 22313-1450

By hand: U. S. Patent and Trademark Office
Customer Service Window, Mail Stop Petitions
Randolph Building
401 Dulany Street
Alexandria, VA 22314

The centralized facsimile number is **(571) 273-8300.**

Telephone inquiries concerning this decision should be directed to Tredelle Jackson at (571) 272-2783.

Ramesh Krishnamurthy

Ramesh Krishnamurthy
Petitions Examiner
Office of Petitions

UNITED STATES PATENT AND TRADEMARK OFFICE

COMMISSIONER FOR PATENTS
UNITED STATES PATENT AND TRADEMARK OFFICE
WASHINGTON, DC 20231
www.uspto.gov

Paper No. 9

MAIL

MAR 1 0 2003

DIRECTOR OFFICE
TECHNOLOGY CENTER 2600

SIEMENS SCHWEIZ
I-44, INTELLECTUAL PROPERTY
ALBISRIEDERSTRASSE 245
ZURICH CH-80-47 CH SWITZERLAND

In re Application of	:	
Ming-Yee Chiu	:	
Application No. 09/773,247	:	DECISION ON REQUEST TO
Filed: February 1, 2001	:	WITHDRAW AS ATTORNEY
For: **METHOD AND APPARATUS FOR MONITORING AN ANALOG METER**	:	

This is a decision on the request to withdraw as attorney/agent of record filed on January 31, 2003.

A grantable request to withdraw as attorney/agent of record must:
(1) indicate the present mailing address of the attorney(s)/agent(s) who seek(s) to withdraw, and
(2) be signed by each attorney/agent seeking to withdraw or clearly be signed on their behalf, and
(3) be *approved* at least thirty (30) days prior to the maximum extendable period for response to any outstanding Office Action, and
(4) indicate the address to which future correspondence should be mailed.

Petitioner has met all of the above. Accordingly, the request is **GRANTED**.

All attorneys and agents of record associated with Customer No. 26461 are removed from record.

All future communications from the Office will be directed to the address listed below provided by the withdrawing attorney until otherwise notified by applicant. Applicant is reminded of the obligation to promptly notify the Patent and Trademark Office of any change in correspondence address to ensure receipt of all communications from the Office.

Krista Zele
Special Program Examiner
Technology Center 2600
Communications
(703) 305-4701

cc: Epping, Hermann & Fischer
Ridlerstrasse 55
Munich, D-80339
Germany

UNITED STATES PATENT AND TRADEMARK OFFICE

COMMISSIONER FOR PATENTS
UNITED STATES PATENT AND TRADEMARK OFFICE
P.O. BOX 1450
ALEXANDRIA, VA 22313-1450
www.uspto.gov

Paper No. 16

STEVEN J. ROCCI
WOODCOCK WASHBURN LLP
ONE LIBERTY PLACE
46TH FLOOR
PHILADELPHIA PA 19103

COPY MAILED

AUG 2 0 2003

OFFICE OF PETITIONS

In re Application of
Jason S. Brownell et al.
Application No. 09/773,256
Filed: January 30, 2001
Attorney Docket No. MSFT-1782/303313.01

DECISION GRANTING
PETITION

This is a decision on the petition under 37 CFR 1.10 (c) filed March 3, 2003, to correct the filing date to January 30, 2003, rather than the presently accorded filing date of January 31, 2003.

Petitioner alleges that the application was deposited in Express Mail service on January 30, 2001. In support, on March 3, 2003, petitioner supplied a copy of Express Mail Label No. EK888993606US (the same Express Mail number found on the transmittal sheet accompanying the original application papers located in the official file). The "date-in" on the Express Mail Label is January 30, 2001.

In view of the above, the petition is granted and since no fee is due, petitioner's deposit account no. 23-3050 will be credited in the amount of $130.00 for the petition fee.

The application is being forwarded to the Office of Initial Patent Examination for correction of the **filing date to January 30, 2001** and for issuance of a corrected filing receipt.

Telephone inquiries related to this matter should be directed to the undersigned Petitions Attorney at 703-305-4497.

Patricia Faison-Ball
Senior Petitions Attorney
Office of Petitions

SPE RESPONSE FOR CERTIFICATE OF CORRECTION

Paper No.: _____

DATE : November 1, 2006

TO SPE OF : ART UNIT 2623

SUBJECT : Request for Certificate of Correction for Appl. No.: 09/773263 Patent No.: 7,100,183 B2

Please respond to this request for a certificate of correction within 7 days.

Please review the requested changes/corrections as shown in the **COCIN** document(s) in the IFW application image. No new matter should be introduced, nor should the scope or meaning of the claims be changed.

Please complete the response (see below) and forward the completed response to scanning using document code **COCX**.

Elisha Evans

Certificates of Correction Branch

703-308-9390 ext. 110

Thank You For Your Assistance

The request for issuing the above-identified correction(s) is hereby:

Note your decision on the appropriate box.

- ☒ **Approved** — **All** changes apply.
- ☐ **Approved in Part** — Specify below which changes **do not** apply.
- ☐ **Denied** — State the reasons for denial below.

Comments: _____

_____

_____

_____

_____

SPE — Art Unit 11/3/06

SPE RESPONSE FOR CERTIFICATE OF CORRECTION

Paper No.: _____

DATE : 12/4/04

TO SPE OF : ART UNIT 1713

SUBJECT : Request for Certificate of Correction on Patent No.: 66423324

A response is requested with respect to the accompanying request for a certificate of correction.

Please complete this form and return with file, within 7 days to:
Certificates of Correction Branch - PK 3-910
Palm location **7590** - Tel. No. 305-8201

With respect to the change(s) requested, correcting Office and/or Applicant's errors, should the patent read as shown in the certificate of correction? No new matter should be introduced, nor should the scope or meaning of the claims be changed.

Please see COCIN dated 12-3-03 in the table of contents of IFW.

Thank You For Your Assistance

Diana T. Rose
Certificates of Correction Branch

The request for issuing the above-identified correction(s) is hereby:
Note your decision on the appropriate box.

- [x] **Approved** — All changes apply.
- [ ] **Approved in Part** — Specify below which changes **do not** apply.
- [ ] **Denied** — State the reasons for denial below.

Comments:

Q Wu AU 1713

U.S. DEPARTMENT OF COMMERCE Patent and Trademark Office

UNITED STATES PATENT AND TRADEMARK OFFICE

COMMISSIONER FOR PATENTS
UNITED STATES PATENT AND TRADEMARK OFFICE
WASHINGTON, D.C. 20231
www.uspto.gov

Paper No. 4

COPY MAILED

JUL 23 2001

OFFICE OF PETITIONS
A/C PATENTS

MARTIN C. FLIESLER, ESQ.
FLIESLER, DUBB, MEYER & LOVEJOY LLP
SUITE 400
FOUR EMBARCADERO CENTER
SAN FRANCISCO, CA 94111-4156

In re Application of :
Morales, et al. :
Application No. 09/773,312 :
Filed: January 31, 2001 :
Attorney Docket No.: AMDI8366US0 :
For: METHODS FOR CHARACTERIZING AND:
REDUCING ADVERSE EFFECTS OF TEXTURE:
OF SEMICONDUCTOR FILMS :

DECISION ACCORDING STATUS
UNDER 37 C.F.R. § 1.47(a)

This is in response to the petition under 37 C.F.R. § 1.47(a), filed May 23, 2001.

The petition is **GRANTED**.

Petitioner has shown that the non-signing inventor has refused to join in the filing of the above-identified application after having been presented with the application papers. Specifically, the declaration D. Benjamin Borson establishes that the inventor was mailed the application papers, including the specification, claims and drawings, and thereafter refused to execute the application papers in an Email communication; attached to the instant petition is Exhibit A, a copy of the Email communication wherein the non-signing inventor's refusal to execute the application papers is evident.

The above-identified application and papers have been reviewed and found in compliance with 37 C.F.R. § 1.47(a). This application is hereby accorded Rule 1.47(a) status.

As provided in Rule 1.47(a), this Office will forward notice of this application's filing to the non-signing inventor at the address given in the petition. Notice of the filing of this application will also be published in the Official Gazette.

As per the authorization contained in the instant petition, deposit account No. 06-1325 has been charged the required surcharge for late filing of declaration of $130.00 and the outstanding claim fees of $80.00.

After this decision is mailed, the above-identified application will be returned to the Office of Initial Patent Examination for issuance of a corrected filing receipt.

Telephone inquiries related to this decision may be directed to Petitions Attorney Alesia M. Brown at (703) 305-0310.

Beverly M. Flanagan
Supervisory Petitions Examiner
Office of Petitions
Office of the Deputy Commissioner
for Patent Examination Policy

UNITED STATES PATENT AND TRADEMARK OFFICE

COMMISSIONER FOR PATENTS
UNITED STATES PATENT AND TRADEMARK OFFICE
WASHINGTON, D.C 20231
www.uspto.gov

COPY MAILED

JUL 23 2001

OFFICE OF PETITIONS
A/C PATENTS

LETTER

GUARIONEX MORALES
859 BLAIR AVENUE, APT. 4
SUNNYVALE, CA 94087

Morales, et al. :
Application No. 09/773,312 :
Filed: January 31, 2001 :
Attorney Docket No.: AMDI8366US0 :
For: METHODS FOR CHARACTERIZING AND:
REDUCING ADVERSE EFFECTS OF TEXTURE:
OF SEMICONDUCTOR FILMS :

Dear Mr. Morales:

You are named as the inventor in the above-identified United States patent application filed under the provisions of 35 U.S.C. 116 (United States Code) and 37 C.F.R. § 1.47(a), Rules of Practice in Patent Cases. Should a patent be granted on the application you will be designated therein as a joint inventor.

As a named inventor you are entitled to inspect any paper in the file wrapper of the application, order copies of all or any part thereof (at a prepaid cost as per 37 C.F.R. § 1.19) or make your position of record in the application. Alternatively, you may arrange to do any of the preceding through a registered patent attorney or agent presenting written authorization from you. If you care to join the application, counsel of record (see below) would presumably assist you. Joining in the application would entail the filing of an appropriate oath or declaration by you pursuant to 37 C.F.R. § 1.63.

Telephone inquiries regarding this communication should be directed to Petitions Attorney Alesia M. Brown at (703) 305-0310. Requests for information regarding your application should be directed to the File Information Unit at (703) 308-2733. Information regarding how to pay for and order a copy of the application, or a specific paper in the application, should be directed to Certification Division at (703) 308-9726 or 1-800-972-6382 (outside the Washington D.C. area).

Beverly M. Flanagan
Supervisory Petitions Examiner
Office of Petitions
Office of the Deputy Commissioner
for Patent Examination Policy

CC: MARTIN C. FLIESLER, ESQ.
FLIESLER, DUBB, MEYER & LOVEJOY LLP
SUITE 400
FOUR EMBARCADERO CENTER
SAN FRANCISCO, CA 94111-4156

UNITED STATES PATENT AND TRADEMARK OFFICE

Commissioner for Patents
United States Patent and Trademark Office
P.O. Box 1450
Alexandria, VA 22313-1450
www.uspto.gov

ROBERT R. WATERS, ESQ.
WATERS LAW OFFICE, PLLC
633 SEVENTH STREET
HUNTINGTON WV 25701

COPY MAILED

JUL 0 7 2005

OFFICE OF PETITIONS

In re Application of	:	
Rich D. Lang	:	
Application No. 09/773,343	:	ON PETITION
Filed: January 31, 2001	:	
Attorney Docket No. 44PAO300	:	

This is a decision on the petition under 37 CFR 1.137(b), filed February 11, 2005, to revive the above-identified application.

The petition is **GRANTED**.

The above-identified application became abandoned for failure to reply in a timely manner to the nonfinal Office action mailed February 13, 2003, which set a statutory period for reply of three (3) months. Accordingly, the above-identified application became abandoned on May 14, 2003.

The above-identified application has been abandoned for an extended period of time. The Patent and Trademark Office is relying on petitioner's duty of candor and good faith and accepting the statement that the entire delay in filing the required reply from the due date for the reply until the filing of a grantable petition pursuant to 37 CFR 1.137(b) was unintentional. See Changes to Patent Practice and Procedure, 62 Fed. Reg. at 53160 and 53178; 1203 Off. Gaz. Pat. Office at 88 and 103 (responses to comments 64 and 109) (applicant obligated under 37 CFR 10.18 to inquire into the underlying facts and circumstances when providing the statement required by 37 CFR 1.137(b) to the Patent and Trademark Office).

Pursuant to 37 CFR 1.136, an extension of time must be filed prior to the expiration of the maximum period obtainable for reply to avoid abandonment. Accordingly, since the extension of time submitted with the petition on February 11, 2005 was subsequent to the maximum period obtainable for reply, an extension of time fee is unnecessary.

Telephone inquiries concerning this decision should be directed to the undersigned at (571) 272-3208.

The application is being forwarded to Technology Center AU 3722.

Karen Creasy

Karen Creasy
Petitions Examiner
Office of Petitions
Office of the Deputy Commissioner
for Patent Examination Policy

UNITED STATES PATENT AND TRADEMARK OFFICE

Commissioner for Patents
United States Patent and Trademark Office
P.O. Box 1450
Alexandria, VA 22313-1450
www.uspto.gov

Paper No. 16

CHERNOFF, VILHAUER, MCCLUNG & STENZEL
1600 ODS TOWER
601 S W SECOND AVENUE
PORTLAND, OR 97204

COPY MAILED

AUG 3 0 2004

OFFICE OF PETITIONS

In re Application of :
Jagtar Singh Saroya :
Application No. 09/773,396 :
Filed: January 31, 2001 :
Attorney Docket No. KLR 7146.084 :

ON PETITION

This is a decision on the petition under 37 CFR 1.137(b), filed July 6, 2004, to revive the above-identified application.

The petition is **GRANTED**.

The above-identified application became abandoned for failure to reply in a timely manner to the final Office action mailed December 16, 2003, which set a shortened statutory period for reply of three (3) months. No extensions of time under the provisions of 37 CFR 1.136(a) were obtained. Accordingly, the application became abandoned on March 17, 2004.

An extension of time under 37 CFR 1.136 must be filed prior to the expiration of the maximum extendable period for reply. See In re Application of S., 8 USPQ2d 1630, 1631 (Comm'r Pats. 1988). Accordingly, the request for extension of time submitted with the petition on July 6, 2004 was subsequent to the maximum extendable period for reply, this fee is unnecessary and will not be charged to petitioner's deposit account.

Receipt is acknowledged of the Amendment filed July 6, 2004, with the instant petition.

Telephone inquiries concerning this decision should be directed to the undersigned at (703) 306-5594.

The application file is being forwarded to Technology Center 2800, Art Unit 2872 for processing the Request for Continued Examination under 37 CFR 1.114 filed with the instant petition.

Retta Williams

Retta Williams
Petitions Examiner
Office of Petitions
Office of the Deputy Commissioner
for Patent Examination Policy

UNITED STATES PATENT AND TRADEMARK OFFICE

Commissioner for Patents
United States Patent and Trademark Office
P.O. Box 1450
Alexandria, VA 22313-1450
www.uspto.gov

HELLER EHRMAN, LLP
4350 LA JOLLA VILLAGE DRIVE #700
7TH FLOOR
SAN DIEGO, CA 92122

COPY MAILED
JUN 2 0 2006
OFFICE OF PETITIONS

In re Application of	:	
Neveu, et. al.	:	DECISION ON REQUEST
Application No. 09/773,452	:	TO WITHDRAW FROM
Filed: January 31, 2001	:	RECORD
Attorney Docket No. 37090-2002	:	

This is a decision on the request to withdraw as attorney or agent of record under 37 CFR § 1.36(b), filed on March 9, 2006.

The request to withdraw as attorney or agent is **NOT APPROVED** as moot.

A review of the file record indicates that the power of attorney to all the attorneys or agents of record have been revoked by the assignee of the patent application. Accordingly, the request to withdraw under 37 CFR § 1.36(b) is moot.

The correspondence address of record has been changed and the new correspondence address is the address indicated below.

There is an outstanding Office action mailed March 16, 2006, that requires a response from the applicant.

Telephone inquires concerning this decision should be directed to Andrea Smith at (571) 272- 3226.

Andrea Smith
Petitions Examiner
Office of Petitions

Conferee:

cc: CARR & FERRELL, LLP
2200 GENG ROAD
PALO ALTO, CA 94303

UNITED STATES PATENT AND TRADEMARK OFFICE

Commissioner for Patents
United States Patent and Trademark Office
P.O. Box 1450
Alexandria, VA 22313-1450
www.uspto.gov

CARR & FERRELL, LLP
220 GENG ROAD
PALO ALTO, CA 94303

COPY MAILED
JUN 2 0 2006
OFFICE OF PETITIONS

In re Application of	:	
Neveu, et. al.	:	
Application No. 09/773,452	:	ON PETITION
Filed: January 13, 2001	:	
Attorney Docket No. PA3656US	:	

This is a decision on the petition under 37 CFR 1.137(b), filed May 3, 2006, to revive the above-identified application.

The petition is **DISMISSED AS MOOT**.

A review of the record fails to show that the application was abandoned. A final Office action was mailed on September 24, 2004. In response, on January 26, 2005 a Notice of Appeal was filed. However, on June 20, 2005, a Request for Continued Examination (RCE) under 37 CFR 1.114 was filed, including an appropriate three (3) month extension of time. Since the RCE was filed within the time period for filing an appeal brief, the appeal was dismissed and examination continued.

In view of the above, the instant petition and $1,500 petition fee are unnecessary will be refunded to petitioner, by Treasury Check, in due course.

If petitioner finds that his/her records indicate that this application should be abandoned for any reason, he/she must notify the Office immediately.

This application file is being referred to Technology Center Art Unit 3714, to await a response to the final Office action mailed March 16, 2006.

Telephone inquiries concerning this decision should be directed to the undersigned at (571) 272-3226.

Andrea Smith
Petitions Examiner
Office of Petitions

UNITED STATES PATENT AND TRADEMARK OFFICE

COMMISSIONER FOR PATENTS
UNITED STATES PATENT AND TRADEMARK OFFICE
P.O. BOX 1450
ALEXANDRIA, VA 22313-1450
www.uspto.gov

GREENSFELDER HEMKER & GALE PC
SUITE 2000
10 SOUTH BROADWAY
ST LOUIS MO 63102

MAILED

JUL 22 2005

DIRECTOR'S OFFICE
TECHNOLOGY CENTER 2600

In re Application of
GILSTER, PETER, et al
Serial No.: 09/773,475
Filed: February 1, 2001
For: **SYSTEM FOR AUTOMATED SCREENING OF SECURITY CAMERAS**

DECISION ON PETITION
ACCEPTANCE OF COLOR DRAWINGS

This is a decision on the petition under 37 C.F.R. § 1.84(a)(2), filed, September 24, 2004, requesting acceptance of color drawings.

The petition requests that the color drawings, although not specified in the petition, are noted as figures 6, 9, and 10, be accepted in lieu of black and white drawings.

A grantable petition under 37 C.F.R. §1.84(a)(2) must be accompanied by a fee set forth under 37 C.F.R. § 1.17(h), 3 (three) set of the color drawings in question, and the specification must contain, or be amended to contain, the following language as the first paragraph in that portion of the specification relating to the brief description of the drawings:

"The file of this patent contains at least one drawing executed in color. Copies of this patent with color drawing(s) will be provided by the Patent and Trademark Office upon request and payment of the necessary fee."

The petition is **GRANTED**.

Dwayne Bost
Special Program Examiner
Technology Center 2600
Communications

UNITED STATES PATENT AND TRADEMARK OFFICE

COMMISSIONER FOR PATENTS
UNITED STATES PATENT AND TRADEMARK OFFICE
P.O. BOX 1450
ALEXANDRIA, VA 22313-1450
www.uspto.gov

GREENSFELDER HEMKER & GALE PC
SUITE 2000
10 SOUTH BROADWAY
ST LOUIS MO 63102

MAILED

AUG - 4 2005

DIRECTOR'S OFFICE
TECHNOLOGY CENTER 2600

In re Application of
GAROUTTE, MAURICE V.
Serial No.: 09/773,475
Filed: February 1, 2001
For: **SYSTEM FOR AUTOMATED SCREENING OF SECURITY CAMERAS**

DECISION ON PETITION
ACCEPTANCE OF COLOR DRAWINGS

This is a decision on the petition under 37 C.F.R. § 1.84(a)(2), filed, September 24, 2004, requesting acceptance of color drawings.

The petition requests that the color drawings, although not specified in the petition, are noted as figures 6, 9, and 10, be accepted in lieu of black and white drawings.

A grantable petition under 37 C.F.R. §1.84(a)(2) must be accompanied by a fee set forth under 37 C.F.R. § 1.17(h), 3 (three) set of the color drawings in question, and the specification must contain, or be amended to contain, the following language as the first paragraph in that portion of the specification relating to the brief description of the drawings:

"The file of this patent contains at least one drawing executed in color. Copies of this patent with color drawing(s) will be provided by the Patent and Trademark Office upon request and payment of the necessary fee."

The petition is **GRANTED**.

Dwayne Bost
Special Program Examiner
Technology Center 2600
Communications

UNITED STATES PATENT AND TRADEMARK OFFICE

COMMISSIONER FOR PATENTS
UNITED STATES PATENT AND TRADEMARK OFFICE
WASHINGTON, DC 20231
www.uspto.gov

MAILED

MAR 1 7 2003

Technology Center 2100

Paper No. 6

POWELL, GOLDSTEIN, FRAZER & MURPHY LLP
P.O. BOX 97233
WASHINGTON DC 20090-7223

In re Application of: Morrison
Application No. 09/773,487
Filed: February 2, 2001
For: PROCESSES AND SYSTEMS FOR ENABLING SECURE AND CONTROLLED DISTRIBUTION AND USE OF INFORMATION.

DECISION ON PETITION TO MAKE SPECIAL

This is a decision on the petition, filed February 6, 2003 under 37 C.F.R. §102(d) and M.P.E.P. §708.02(XI): Inventions For Countering Terrorism, to make the above-identified application special.

M.P.E.P. §708.02 (XI), which sets out the prerequisites for a grantable petition for Inventions For Countering Terrorism under 37 C.F.R. § 102(d), states in relevant part:

International terrorism as defined in 18 U.S.C. 2331 includes "activities that - (A) involve violent acts or acts dangerous to human life that are a violation of the criminal laws of the United States or of any State, or that would be a criminal violation if committed within the jurisdiction of the United States or of any State; [and] (B) appear to be intended - (i) to intimidate or coerce a civilian population; (ii) to influence the policy of a government by intimidation or coercion; or (iii) to affect the conduct of a government by assassination or kidnapping..." The types of technology for countering terrorism could include, but are not limited to, systems for detecting/identifying explosives, aircraft sensors/security systems, and vehicular barricades/disabling systems.

Applicants who desire that an application relating to inventions for countering terrorism be made special should file a petition with the petition fee under 37 CFR 1.17(h) requesting the Patent and Trademark Office to make the application special. The petition for special status should be accompanied by a statement explaining how the invention contributes to countering terrorism.

Petitioner's submission fails to meet the criteria set out with respect to countering terrorism in M.P.E.P. §708.02(XI). The specification and claims as originally filed provide no indication of an intention to counter terrorism by contributing to the identification of PCs. The declaration supporting the petition describes steps to identify and track the authorized PC for secure data transfer. The claimed invention fails to indicate countering terrorism. Moreover, "identifying" and "tracking" do not equate to "countering". Further steps would be required to actually offset or nullify terrorism, yet no suggestion of "countering" is found in the disclosure. As a result, no advancement in the technology of countering terrorism has been persuasively shown.

Accordingly, the petition is **DENIED**. The application file is being forwarded to Central Files to await examination in its proper turn based on its effective filing date. Any request for reconsideration must be filed within two months of the mailing date of this decision.

It is suggested that applicant review M.P.E.P. §708.02 regarding other grounds available for filing a petition to make special. In particular, note M.P.E.P. §708.02(VIII): Accelerated Examination, which does not place limitations on the subject matter of the application.

Vincent A. Trans
Special Program Examiner
Technology Center 2100
Computer Security, Architecture and
Information Security
703-305-9750

UNITED STATES PATENT AND TRADEMARK OFFICE

COMMISSIONER FOR PATENTS
UNITED STATES PATENT AND TRADEMARK OFFICE
P.O. BOX 1450
ALEXANDRIA, VA 22313-1450
www.uspto.gov

Paper No. 6

PATENT ADMINISTRATOR
KATTEN MUCHIN ROSENMAN LLP
1025 THOMAS JEFFERSON STREET, N.W.
EAST LOBBY: SUITE 700
WASHINGTON, DC 20007-5201

COPY MAILED

MAR 23 2007

OFFICE OF PETITIONS

In re Application of	:	
John N. Vergne	:	
Application No. 09/773,524	:	ON PETITION
Filed: February 2, 2001	:	
Attorney Docket No. 216224.00043	:	

This is a decision on the petition under 37 CFR 1.137(b), filed September 18, 2006, to revive the above-identified application.

The application became abandoned for failure to timely respond to a Notice to File Missing Parts mailed March 13, 2001. Since no response was filed a Notice of Abandonment was mailed on October 23, 2003. On September 18, 2006, the present petition was filed, wherein petitioner states that the notices mailed March 13, 2001 and October 23, 2003 were not received because they were mailed to an incorrect correspondence address. Petitioner explains that the wrong Customer Number was provided on filing. A Change of Correspondence Address identifying the correct Customer Number accompanies the petition.

A grantable petition under 37 CFR 1.137(b)[1] must be accompanied by: (1) the required reply,[2] unless previously filed; (2) the petition fee as set forth in 37 CFR 1.17(m); (3) a statement that the entire delay in filing the required reply from the due date for the reply until the filing of a grantable petition pursuant to 37 CFR 1.137(b) was unintentional; and (4) any terminal disclaimer (and fee as set forth in 37 CFR 1.20(d)) required by 37 CFR 1.137(c). Where there is a question as to whether either the abandonment or the delay in filing a petition under 37 CFR 1.137 was unintentional, the Commissioner may require additional information. See MPEP 711.03(c)(III)(C) and (D). The instant petition lacks item (1).

Accordingly, the petition is **DISMISSED**.

---

[1] As amended effective December 1, 1997. See Changes to Patent Practice and Procedure; Final Rule Notice, 62 Fed. Reg. 53131, 53194-95 (October 10, 1997), 1203 Off. Gaz. Pat. Office 63, 119-20 (October 21, 1997).

[2] In a nonprovisional application abandoned for failure to prosecute, the required reply may be met by the filing of a continuing application. In an application or patent, abandoned or lapsed for failure to pay the issue fee or any portion thereof, the required reply must be the payment of the issue fee or any outstanding balance thereof.

Any request for reconsideration of this decision must be submitted within TWO (2) MONTHS from the mail date of this decision. Extensions of time under 37 CFR 1.136(a) are permitted. The reconsideration request should include a cover letter entitled "Renewed Petition under 37 CFR 1.137(b)." This is **not** a final agency action within the meaning of 5 U.S.C. § 704.

The correspondence address has been changed as requested. For applicant's convenience, a copy of the Notices mailed March 13, 2001 and October 23, 2003 are enclosed.

Further correspondence with respect to this matter should be addressed as follows:

By mail: Mail Stop PETITION
Commissioner for Patents
Post Office Box 1450
Alexandria, VA 22313-1450

By hand: U.S. Patent and Trademark Office
Customer Service Window, Mail Stop PETITION
Randolph Building
401 Dulany Street
Alexandria, VA 22314

The centralized facsimile number is **(571) 273-8300**.

Any questions concerning this decision may be directed to the undersigned at (571) 272-3204.

Sherry D. Brinkley
Sherry D. Brinkley
Petitions Examiner
Office of Petitions

Enclosures

UNITED STATES PATENT AND TRADEMARK OFFICE

Commissioner for Patents
United States Patent and Trademark Office
P.O. Box 1450
Alexandria, VA 22313-1450
www.uspto.gov

Paper No. 10

PATENT ADMINISTRATOR
KATTEN MUCHIN ROSENMAN LLP
1025 THOMAS JEFFERSON STREET, N.W.
EAST LOBBY: SUITE 700
WASHINGTON, DC 20007-5201

COPY MAILED

AUG 1 0 2007

OFFICE OF PETITIONS

In re Application of :
John N. Vergne :
Application No. 09/773,524 : ON PETITION
Filed: February 2, 2001 :
Attorney Docket No. 216224.00043 :

This is a decision on the renewed petition under 37 CFR 1.137(b) to revive the above-identified application, filed by May 11, 2007.

The petition is **GRANTED**.

The application became abandoned for a failure to timely respond to a Notice to File Missing Parts (Notice) mailed March 13, 2001. The notice required an oath or declaration under 37 CFR 1.63 and the requisite surcharge under 37 CFR 1.16(e). A Notice of Abandonment was mailed on October 23, 2003. On September 18, 2006, a petition to revive under 37 CFR 1.137(b) was filed; however, the petition was dismissed in a decision mailed March 23, 2007. In response, on May 11, 2007, the present petition was filed. Since a terminal disclaimer fee ($65) is not necessary for a utility application filed after June 8, 1995 and no further petition fee ($750) is required for the renewed petition, the fees paid therefor on May 11, 2007 are being refunded in the form of a credit of $815 to counsel's deposit account.

The petition satisfies the requirements of 37 CFR 1.137(b) in that petitioner has supplied (1) the reply in the form of an executed declaration and the $65 surcharge; (2) the petition fee of 750; and (3) an adequate statement of unintentional delay.[1]

The application is being referred to the Office of Initial Patent Examination (OIPE) for further processing using the declaration filed May 11, 2007.

Telephone inquires related to this decision should be directed to the undersigned at (571) 272-3204. Telephone inquiries related to OIPE processing should be directed to their hotline at (571) 272-4000.

Sherry D. Brinkley
Petitions Examiner
Office of Petitions

---

[1] This application has been abandoned for an extended period of time. The U.S. Patent and Trademark Office is relying on petitioner's duty of candor and good faith and accepting the statement that "the entire delay in filing the required reply from the due date for the reply until the filing of a grantable petition pursuant to 37 CFR 1.137(b) was unintentional." *See* Changes to Patent Practice and Procedure, 62 Fed. Reg., at 53160 and 53178; 1203 Off. Gaz. Pat. Office, at 88 and 103 (responses to comments 64 and 109) (applicant obligated under 37 CFR 10.18 to inquire into the underlying facts and circumstances when providing the statement required by 37 CFR 1.137(b) to the U.S. Patent and Trademark Office).

UNITED STATES PATENT & TRADEMARK OFFICE
Washington, D.C. 20231

REQUEST FOR PATENT FEE REFUND

1 Date of Request: 08/09/07 | 2 Serial/Patent # 09773524

3 Please refund the following fee(s):		4 PAPER NUMBER	5 DATE FILED	6 AMOUNT
	Filing			$
	Amendment			$
	Extension of Time			$
	Notice of Appeal/Appeal			$
X	Petition	7	05/11/07	$ 750.00
	Issue			$
X	Cert of Correction/Terminal Disc.	7	05/11/07	$ 65.00
	Maintenance			$
	Assignment			$
	Other			$

7 TOTAL AMOUNT OF REFUND $ 815.00

8 TO BE REFUNDED BY:

	Treasury Check
X	Credit Deposit A/C #:

9 5 0 -- 1 7 1 0

10 REASON:

	Overpayment
X	Duplicate Payment
X	No Fee Due (Explanation):

No TD requied and petition fee previously paid.

11 REFUND REQUESTED BY:

TYPED/PRINTED NAME: Sherry D. Brinkley TITLE: Petitions Examiner

SIGNATURE: Sherry D. Brinkley PHONE: 2-3204

OFFICE: Petitions

****

THIS SPACE RESERVED FOR FINANCE USE ONLY:

APPROVED: CKhbK DATE: 8/14/07

Instructions for completion of this form appear on the back. After completion, attach white and yellow copies to the official file and mail or hand-carry to:

Office of Finance
Refund Branch
Crystal Park One, Room 802B

FORM PTO 1577
(01/90)

UNITED STATES PATENT AND TRADEMARK OFFICE

COMMISSIONER FOR PATENT
UNITED STATES PATENT AND TRADEMARK OFFIC
P.O. BOX 1450
ALEXANDRIA, VA 22313-1450
www.uspto.gov

June 21, 2004

FOLEY AND LARDNER
SUITE 500
3000 K STREET NW
WASHINGTON DC 20007

JUN 21 2004

In re Application of:	:	
SCHUTH, *et al.*	:	DECISION ON REQUEST TO WITHDRAW FROM RECORD
Application No. 09/773,534	:	
Filed: February 02, 2001	:	
Attorney Docket No. 078096-0102	:	

This is a decision on the request to withdraw as attorney of record under 37 C.F.R. § 1.36, filed April 25, 2003.

The request is **dismissed** as moot.

A review of the application file record reveals that a proper revocation of power of attorney was filed on May 13, 2003. As such, the power of attorney for the attorneys and agents requesting withdrawal has already been revoked. Accordingly, the present request is moot and must be dismissed.

All future communications from the Office will be directed to the below-listed address until otherwise notified by applicant.

Inquiries related to this decision should be directed to Lissi Mojica Marquis at (571) 272-1596.

Lissi Mojica Marquis, Special Programs Examiner
Technology Center 2800
Semiconductors, Electrical and Optical
Systems and Components

cc: Stephen D. Scanion
Jones Day
North Point
901 Lakeside Avenue
Cleveland, Ohio 44114

UNITED STATES PATENT AND TRADEMARK OFFICE

Commissioner for Patents
United States Patent and Trademark Office
P.O. Box 1450
Alexandria, VA 22313-1450
www.uspto.gov

FISH & RICHARDSON PC
1425 K STREET NW, 11TH FLOOR
WASHINGTON, DC 20005-3500

COPY MAILED

JAN 14 2005

OFFICE OF PETITIONS

In re Application of	:
Shunpei Yamazaki et al	:
Application No. 09/773,543	: DECISION GRANTING PETITION
Filed: February 2, 2001	: UNDER 37 CFR 1.313(c)(2)
Attorney Docket No. 12732-012001/US4638	:

This is a decision on the petition, filed January 13, 2005, under 37 CFR 1.313(c)(2) to withdraw the above-identified application from issue after payment of the issue fee.

The petition is **GRANTED**.

The above-identified application is withdrawn from issue for consideration of a submission under 37 CFR 1.114 (request for continued examination). See 37 CFR 1.313(c)(2).

Petitioner is advised that the issue fee paid on December 23, 2004 in the above-identified application cannot be refunded. If, however, the above-identified application is again allowed, petitioner may request that it be applied towards the issue fee required by the new Notice of Allowance.[1]

Telephone inquiries should be directed to the undersigned at (571) 272-3218.

This matter is being referred to Technology Center AU 2826 for processing of the request for continued examination under 37 CFR 1.114 and for consideration of the concurrently filed amendment and Information Disclosure Statement.

Frances Hicks
Petitions Examiner
Office of Petitions
Office of the Deputy Commissioner
for Patent Examination Policy

---

[1] *The request to apply the issue fee to the new Notice may be satisfied by completing and returning the new Issue Fee Transmittal Form PTOL-85(b), which includes the following language thereon: "Commissioner for Patents is requested to apply the Issue Fee and Publication Fee (if any) or re-apply any previously paid issue fee to the application identified above." Petitioner is advised that, whether a fee is indicated as being due or not, the Issue Fee Transmittal Form* ***must*** *be completed and timely submitted to avoid abandonment. Note the language in bold text on the first page of the Notice of Allowance and Fee(s) Due (PTOL-85).*

OIPE JC139
APR 2 5 2001
PATENT & TRADEMARK OFFICE

UNITED STATES PATENT AND TRADEMARK OFFICE

COMMISSIONER FOR PATENTS
UNITED STATES PATENT AND TRADEMARK OFFICE
WASHINGTON, D.C. 20231
www.uspto.gov

APPLICATION NUMBER	FILING/RECEIPT DATE	FIRST NAMED APPLICANT	ATTORNEY DOCKET NUMBER
09/773,599	02/02/2001	John Craig Smith	P 276655 PHM70655/US

CONFIRMATION NO. 6247

FORMALITIES LETTER

OC000000005926684

00909
PILLSBURY WINTHROP LLP
1100 NEW YORK AVENUE, N.W.
9TH FLOOR
WASHINGTON, DC 20005

Date Mailed: 04/02/2001

NOTICE TO FILE MISSING PARTS OF NONPROVISIONAL APPLICATION

FILED UNDER 37 CFR 1.53(b)

Filing Date Granted

An application number and filing date have been accorded to this application. The item(s) indicated below, however, are missing. Applicant is given **TWO MONTHS** from the date of this Notice within which to file all required items and pay any fees required below to avoid abandonment. Extensions of time may be obtained by filing a petition accompanied by the extension fee under the provisions of 37 CFR 1.136(a).

- The oath or declaration is missing.
  A properly signed oath or declaration in compliance with 37 CFR 1.63, identifying the application by the above Application Number and Filing Date, is required.
- To avoid abandonment, a late filing fee or oath or declaration surcharge as set forth in 37 CFR 1.16(e) of $130 for a non-small entity, must be submitted with the missing items identified in this letter.
- **The balance due by applicant is $ 130.**

- This application does not contain a statement that the content of the sequence listing information recorded in computer readable form is identical to the written (on paper or compact disc) sequence listing and, where applicable, includes no new matter, as required by 37 CFR 1.821(e), 1.821(f), 1.821 (g), 1.825(b), or 1.825(d). Applicant must provide such statement. If the effective filing date is on or after September 8, 2000, see the final rulemaking notice published in the Federal Register at 65 FR 54604 (September 8, 2000) and 1238 OG 145 (September 19, 2000).
- A copy of the "Sequence Listing" in computer readable form has not been submitted as required by 37 C.F.R. 1.821(e). If the effective filing date is on or after September 8, 2000, see the final rulemaking notice published in the Federal Register at 65 FR 54604 (September 8, 2000) and 1238 OG 145 (September 19, 2000). Applicant must provide an initial computer readable form (CRF) copy of the "Sequence Listing" and a statement that the content of the sequence listing information recorded in computer readable form is identical to the written (on paper or compact disc) sequence listing and, where applicable, includes no new matter, as required by 37 CFR 1.821(e), 1.821(f), 1.821(g), 1.825 (b), or 1.825(d). If applicant desires the sequence listing in the instant application to be identical with that of another application on file in the U.S. Patent and Trademark Office, such request in accordance with 37 CFR 1.821(e) may be submitted in lieu of a new CRF.

For questions regarding compliance to these requirements, please contact:

- **For Rules Interpretation, call (703) 308-4216**
- **To Purchase PatentIn Software, call (703) 306-2600**
- **For PatentIn Software Program Help, call (703) 306-4119 or e-mail at patin21help@uspto.gov or patin3help@uspto.gov**

A copy of this notice MUST be returned with the reply.

Customer Service Center
Initial Patent Examination Division (703) 308-1202
PART 2 - COPY TO BE RETURNED WITH RESPONSE

04W 4-30-01

IN THE UNITED STATES PATENT AND TRADEMARK OFFICE

PATENT APPLICATION

Sector

Group Art Unit: 1645
Examiner: Not Known
Atty. Dkt. P 276655 (M#) | LDSG/Z70655/US (Client Ref)

Inventor(s): SMITH
Appln. No.: 09 (Series Code ↑) | 773,599 (Serial No. ↑)
Filed: February 2, 2001
Appln. Title: DIAGNOSTIC METHOD

Box Seq

OIPE JC139 APR 25 2001 PATENT & TRADEMARK OFFICE

Hon. Commissioner of Patents
Washington, D.C. 20231

Sir:

SUBMISSION OF SEQUENCE LISTING

Date: April 25, 2001

This is a reply/amendment/letter in the above-identified application and includes the herewith attachment of same date and subject which is incorporated hereinto by reference and the signature below is treated as the signature to the attachment in absence of a signature thereto.

FEE REQUIREMENTS FOR CLAIMS AS AMENDED

1. Small Entity claim
A. ☒ NOT made
B. ☐ Withdrawn
C. ☐ made herewith
D. ☐ made previously
For B & C See Required Separate Paper (Pat-256)

	Claims remaining after amendment	Highest number previously paid for		Present Extra	Large/Small Entity	Additional Fee	Fee Code Lg/Sm
2. Total Effective Claims	27	**minus	27	0	x $18/$9 =	+ $0	103/203
3. Independent Claims	14	***minus	14	0	x $80/$40 =	+ $0	102/202
4. If amendment enters proper multiple dependent claim(s) into this application for first time (leave blank if this is a reissue application) ..... add					+ $270/$135 =	+ $0	104/204
5. Original due Date: June 2, 2001		☐ NONE					
6. Petition is hereby made to extend the original due date to cover the date this response is filed for which the requisite fee is attached (1 mo) (2 mos) (3 mos) (Usable only for ≤ 2mo.OA - - - 4 mos) (Usable only for 30 day/1mo.OA - - - 5 mos)				$110/$55 = $390/$195 = $890/$445 = $1390/$695= $1890/$945=	+ $0		115/215 116/216 117/217 118/218 128/228
7. Enter any previous extension fee paid since above original due date and subtract					- $0		
8. Extension Fee Attached						+ $0	
9. If Terminal Disclaimer attached, add Rule 20(d) official fee					+ $110/$55	+ $0	148/248
10. If IDS attached requires Official Fee under Rule 97 (c), ... add or if Rule 97(d) Request ..... add					+ $180 + $180	+ $0	126 126
11. After-Final Request Fee per rules 129(a) and 17(r)					+ $710/355	+ $0	146/246
12. No. of additional inventions for examination per Rule 129(b).....					x $710/355 ea	+ $0	149/249
13. Request for Continued Examination (RCE)					+ $710/355	+ $0	1179/1279
14. Petition fee for						+ $0	
15. TOTAL FEE ENCLOSED =						$0	

16. *If the entry in this space is less than entry in next space, the "Present Extra" result is "0".
17. **If the "Highest number previously paid for" in this space is less than 20, write "20" in this space.
18. ***If the "Highest number previously paid for" in this space is less than 3, write "3" in this space.

Our Deposit Account No. 03-3975)
(Our Order No. 9901 (C#) | 276655 (M#)

CHARGE STATEMENT: The Commissioner is hereby authorized to charge any fee specifically authorized hereafter, or any missing or insufficient fee(s) filed, or asserted to be filed, or which should have been filed herewith or concerning any paper filed hereafter, and which may be required under Rules 16-18 (missing or insufficiencies only) now or hereafter relative to this application and the resulting Official Document under Rule 20, or credit any overpayment, to our Accounting/Order Nos. shown above, for which purpose a duplicate copy of this sheet is attached.

This CHARGE STATEMENT does not authorize charge of the issue fee until/unless an issue fee transmittal sheet is filed.

Query: Is appeal deadline now? If so, file Notice of Appeals separately.

Pillsbury Winthrop LLP
Intellectual Property Group
1100 New York Avenue, NW
Ninth Floor
Washington, DC 20005-3918
Tel: (202) 861-3000
Atty/Sec: DJB/GRT

By Atty: Donald J. Bird Reg. No. 25323
for
Sig: Gary Tanigawa 43180 Fax: (202) 822-0944
Tel: **(202) 861-3027**

NOTE: File this cover sheet in duplicate with PTO receipt (PAT-103A) and attachments

UNITED STATES PATENT AND TRADEMARK OFFICE

COMMISSIONER FOR PATENTS
UNITED STATES PATENT AND TRADEMARK OFFICE
WASHINGTON, D.C. 20231
www.uspto.gov

APPLICATION NUMBER	FILING/RECEIPT DATE	FIRST NAMED APPLICANT	ATTORNEY DOCKET NUMBER
09/773,599	02/02/2001	John Craig Smith	P 276655 PHM70655/US

OIPE JC100 APR 2 4 2001 PATENT & TRADEMARK OFFICE

CONFIRMATION NO. 6247

FORMALITIES LETTER

OC000000005926684

00909
PILLSBURY WINTHROP LLP
1100 NEW YORK AVENUE, N.W.
9TH FLOOR
WASHINGTON, DC 20005

Date Mailed: 04/02/2001

NOTICE TO FILE MISSING PARTS OF NONPROVISIONAL APPLICATION

FILED UNDER 37 CFR 1.53(b)

Filing Date Granted

An application number and filing date have been accorded to this application. The item(s) indicated below, however, are missing. Applicant is given **TWO MONTHS** from the date of this Notice within which to file all required items and pay any fees required below to avoid abandonment. Extensions of time may be obtained by filing a petition accompanied by the extension fee under the provisions of 37 CFR 1.136(a).

- The oath or declaration is missing.
  A properly signed oath or declaration in compliance with 37 CFR 1.63, identifying the application by the above Application Number and Filing Date, is required.
- To avoid abandonment, a late filing fee or oath or declaration surcharge as set forth in 37 CFR 1.16(e) of $130 for a non-small entity, must be submitted with the missing items identified in this letter.
- **The balance due by applicant is $ 130.**

- This application does not contain a statement that the content of the sequence listing information recorded in computer readable form is identical to the written (on paper or compact disc) sequence listing and, where applicable, includes no new matter, as required by 37 CFR 1.821(e), 1.821(f), 1.821 (g), 1.825(b), or 1.825(d). Applicant must provide such statement. If the effective filing date is on or after September 8, 2000, see the final rulemaking notice published in the Federal Register at 65 FR 54604 (September 8, 2000) and 1238 OG 145 (September 19, 2000).
- A copy of the "Sequence Listing" in computer readable form has not been submitted as required by 37 C.F.R. 1.821(e). If the effective filing date is on or after September 8, 2000, see the final rulemaking notice published in the Federal Register at 65 FR 54604 (September 8, 2000) and 1238 OG 145 (September 19, 2000). Applicant must provide an initial computer readable form (CRF) copy of the "Sequence Listing" and a statement that the content of the sequence listing information recorded in computer readable form is identical to the written (on paper or compact disc) sequence listing and, where applicable, includes no new matter, as required by 37 CFR 1.821(e), 1.821(f), 1.821(g), 1.825 (b), or 1.825(d). If applicant desires the sequence listing in the instant application to be identical with that of another application on file in the U.S. Patent and Trademark Office, such request in accordance with 37 CFR 1.821(e) may be submitted in lieu of a new CRF.

Adjustment date: 11/20/2001 YGIZAW
04/26/2001 NBERHE 00000036 033975 09773599
01 FC:105 130.00 CR

04/26/2001 NBERHE 00000036 033975 09773599
01 FC:105 130.00 CH

For questions regarding compliance to these requirements, please contact:

- **For Rules Interpretation, call (703) 308-4216**
- **To Purchase PatentIn Software, call (703) 306-2600**
- **For PatentIn Software Program Help, call (703) 306-4119 or e-mail at patin21help@uspto.gov or patin3help@uspto.gov**

A copy of this notice MUST be returned with the reply.

Customer Service Center
Initial Patent Examination Division (703) 308-1202
PART 2 - COPY TO BE RETURNED WITH RESPONSE

H-A

Lector #

IN THE UNITED STATES PATENT AND TRADEMARK OFFICE

In re PATENT APPLICATION of:

OIPE JC100
APR 2 4 2001
PATENT & TRADEMARK OFFICE

SMITH

Appln. No.: 09/773,599

Filed: February 2, 2001

FOR: DIAGNOSTIC METHOD

Date: April 24, 2001

RESPONSE TO ERRONEOUSLY ISSUED NOTICE OF MISSING PARTS

Hon. Commissioner of Patents
and Trademarks
Washington, D.C. 20231

Sir:

This is in response to the Notice to File Missing Parts of NonProvisional Application dated April 2, 2001, asserting that "oath or declaration is missing." This Notice was erroneously issued inasmuch as all necessary parts of this application, including an executed declaration, were submitted with the application as filed on February 2, 2001. This is clearly shown by the copy of the application as filed, which notes on the cover page thereof "WITH SIGNED DECLARATION" and has attached thereto an executed declaration. The timely filing of this paper is evidenced by the attached copies of the PTO-Mail Room stamped postcard receipts, acknowledging receipt of the "Declaration (1 # pgs).

With regard to the requirement for Sequence Listing in the Notice to File Missing Parts, the sequence listing is being prepared and will be filed in due course along with a further copy of the Notice.

Since the Notice to File Missing Parts was sent due to U.S. Patent Office error with regard to the oath or declaration being missing, the $130.00 fee is not required. However, the Commissioner is hereby authorized to charge any additional fees associated with this communication or credit any overpayment to Deposit Account No. 03-3975 under Order No. 09901/0276655. A duplicate copy of this communication is enclosed for accounting purposes.

Respectfully Submitted,

PILLSBURY WINTHROP LLP

By: _____

Donald J. Bird
Registration No. 25,323
Tel. No.: (202) 861-3027
Fax No.: (202) 822-0944

1100 New York Avenue, N.W.
Ninth Floor, East Tower
Washington, D.C. 20005-3918
DJB:mk

UNITED STATES PATENT AND TRADEMARK OFFICE

Commissioner for Patents
United States Patent and Trademark Office
P.O. Box 1450
Alexandria, VA 22313-1450
www.uspto.gov

COPY MAILED

FEB 19 2008

SUGHRUE, MION, ZINN,
MACPEAK & SEAS, PLLC
2100 PENNSYLVANIA AVENUE, N.W.
WASHINGTON DC 20037-3213

In re Application of	:	
Brewer	:	
Application No. 09/773,706	:	DECISION
Filed: 2 February, 2001	:	
Attorney Docket No. A7881	:	

This is a decision on the petition filed on 12 January, 2007, considered as a request to withdraw the holding of abandonment under 37 C.F.R. §1.181, and, in the alternative, under 37 C.F.R. §1.137(b) to revive the application as abandoned due to unintentional delay.

The Office regrets the delay in addressing this matter, however, the instant petition was presented to the attorneys in the Office of Petitions only at this writing.

The petition as considered under 37 C.F.R. §1.181 is **DISMISSED** the petition under 37 C.F.R. §1.137(b) is **GRANTED**.

BACKGROUND

The record reflects that:

- Petitioner failed to reply timely and properly to the non-final Office action mailed on 6 May, 2005, (and addressing the non-responsive nature of a previously filed amendment), with reply due on or before 6 June, 2005;

- the application went abandoned after midnight 6 June, 2005;

- Petitioner filed, *inter alia*, a reply in the form of an amendment and terminal disclaimer with fee on 7 November, 2005;

- the Office mailed a Notice of Abandonment on 16 October, 2006;

- on 12 January, 2007, Petitioner filed, *inter alia*, the instant petitions, and averred timely filing of the reply (amendment and terminal disclaimer with fee) with an extension of time; and with the petition to revive (and fee) under 37 C.F.R. §1.137(b), Petitioner submitted a reply (pointing back to the amendment and terminal disclaimer with fee) and made the statement of unintentional delay.

The regulations at 37 C.F.R. §1.181(f) indicate that "[a]ny petition under this part not filed within two months of the mailing date of the action or notice from which relief is requested may be dismissed as untimely, except as otherwise provided. This two-month period is not extendable."

Notably, Petitioner's contemporaneous filing of the petition under 37 C.F.R. §1.137(b) with that under 37 C.F.R. §1.181 appears to acknowledge or otherwise appreciate the failure to have filed timely (i.e., within two months of the act complained of (the Notice of Abandonment)), as set forth in 37 C.F.R. §1.181(f), the petition to withdraw the holding of abandonment.

The availability of applications and application papers online to applicants/practitioners who diligently associate their Customer Number with the respective application(s) now provides an applicant/practitioner on-demand information as to events/transactions in an application.

Out of an abundance of caution, Petitioners always are reminded that the filing of a petition under 37 C.F.R. §1.181 does not toll any periods that may be running any action by the Office and a petition seeking relief under the regulation must be filed within two (2) months of the act complained of (see: 37 C.F.R. §1.181(f)), and that those registered to practice and all others who make representations before the Office are reminded to inquire into the underlying facts of representations made to the Office and support averments with the appropriate documentation– since all owe to the Office the continuing duty to disclose.[1]

---

[1] See supplement of 17 June, 1999. The Patent and Trademark Office is relying on petitioner's duty of candor and good faith and accepting a statement made by Petitioner. See Changes to Patent Practice and Procedure, 62 Fed. Reg. at 53160 and 53178, 1203 Off. Gaz. Pat. Office at 88 and 103 (responses to comments 64 and 109)(applicant obligated under 37 C.F.R. §10.18 to inquire into the underlying facts and circumstances when providing statements to the Patent and Trademark Office).

See specifically, the regulations at 37 C.F.R. §10.18.

STATUTES, REGULATIONS AND ANALYSIS

Congress has authorized the Commissioner to "revive an application if the delay is shown to the satisfaction of the Commissioner to have been "unavoidable." 35 U.S.C. §133 (1994).[2]

The regulations at 37 C.F.R. §1.137(a) and (b) set forth the requirements for a petitioner to revive a previously unavoidably or unintentionally, respectively, abandoned application under this congressional grant of authority.

The language of 35 U.S.C. §133 and 37 C.F.R. §1.137(a) is clear, unambiguous, and without qualification: the delay in tendering the reply to the outstanding Office action, as well as filing the first petition seeking revival, must have been unavoidable for the reply now to be accepted on petition.[4]

Delays in responding properly raise the question whether delays are unavoidable.[3] Where there is a question whether the delay was unavoidable, Petitioners must meet the burden of establishing that the delay was unavoidable within the meaning of 35 U.S.C. §133 and 37 C.F.R. §1.137(a).[4]

And the Petitioner must be diligent in attending to the matter.[5] Failure to do so does not constitute the care required under Pratt, and so cannot satisfy the test for diligence and due care.

(By contrast, unintentional delays are those that do not satisfy the very strict statutory and regulatory requirements of unavoidable delay, and also, by definition, are not intentional.[6]))

---

[2] 35 U.S.C. §133 provides:
35 U.S.C. §133 Time for prosecuting application.
Upon failure of the applicant to prosecute the application within six months after any action therein, of which notice has been given or mailed to the applicant, or within such shorter time, not less than thirty days, as fixed by the Commissioner in such action, the application shall be regarded as abandoned by the parties thereto, unless it be shown to the satisfaction of the Commissioner that such delay was unavoidable.

[3] See: *Changes to Patent Practice and Procedure*; *Final Rule Notice*, 62 *Fed. Reg.* at 53158-59 (October 10, 1997), 1203 *Off. Gaz. Pat. Office* at 86-87 (October 21, 1997).

[4] See: In re Application of G, 11 USPQ2d 1378, 1380 (Comm'r Pats. 1989).

[5] See: Diligence in Filing Petitions to Revive and Petitions to Withdraw the Holding of Abandonment, 1124 Off. Gaz. Pat. Office 33 (March 19, 1991). It was and is Petitioner's burden to exercise diligence in seeking either to have the holding of abandonment withdrawn or the application revived. See 1124 Off. Gaz. Pat. Office supra.

[6] Therefore, by example, an unintentional delay in the reply might occur if the reply and transmittal form are to be prepared for shipment by the US Postal Service, but other pressing matters distract one's attention and the mail is not timely deposited for shipment.

Allegations as to the Request to
Withdraw the Holding of Abandonment

The courts have determined the construct for properly supporting a petition seeking withdrawal of a holding of abandonment.[7] (See, also, the commentary at MPEP §711.03(c)(I)(A) and (B).)

And the regulation requires that relief be sought within two (2) months of the act complained of.

As noted above, Petitioner appears to have failed to file timely under the regulation.

As to Allegations
of Unintentional Delay

The requirements for a grantable petition under 37 C.F.R. §1.137(b) are the petition and fee, a proper reply, a statement/showing of unintentional delay, and–where appropriate—a terminal disclaimer and fee.

It appears that Petitioner has satisfied the regulatory requirements.

CONCLUSION

Petitioner appears to have failed to satisfy the burdens such that the petition to withdraw the holding of abandonment as considered under 37 C.F.R. §1.181 is **dismissed**; the petition under 37 C.F.R. §1.137(b) is **granted**.

The instant application is released to Technology Center/AU 2616 for further processing in due course.

Petitioner may find it beneficial to view Private PAIR within a fortnight of the instant decision to ensure that the revival has been acknowledged by the Technology Center in response to this decision—and it is noted that all inquiries with regard to any failure of that change in status should be directed to the Technology Center/Art Unit where that change of status must be effected.

[7] See: Delgar v. Schulyer, 172 USPQ 513 (D.D.C. 1971).

While telephone inquiries regarding this decision may be directed to the undersigned at (571) 272-3214, it is noted that all practice before the Office is in writing (see: 37 C.F.R. §1.2[8]) and the proper authority for action on any matter in this regard are the statutes (35 U.S.C.), regulations (37 C.F.R.) and the commentary on policy (MPEP). Therefore, no telephone discussion may be controlling or considered authority for Petitioner's action(s).

John J. Gillon, Jr.
Senior Attorney
Office of Petitions

[8] The regulations at 37 C.F.R. §1.2 provide:

§1.2 Business to be transacted in writing.

All business with the Patent and Trademark Office should be transacted in writing. The personal attendance of applicants or their attorneys or agents at the Patent and Trademark Office is unnecessary. The action of the Patent and Trademark Office will be based exclusively on the written record in the Office. No attention will be paid to any alleged oral promise, stipulation, or understanding in relation to which there is disagreement or doubt.

UNITED STATES PATENT AND TRADEMARK OFFICE

COMMISSIONER FOR PATENTS
UNITED STATES PATENT AND TRADEMARK OFFICE
P.O. BOX 1450
ALEXANDRIA, VA 22313-1450
www.uspto.gov

Paper No. 112503

NOV 28 2003

MORRISON & FOERSTER LLP
2000 Pennsylvania Avenue, N.W.
Washington, D.C. 20006-1888

In re Application of	)	
MARTIN LEE et al.	)	
Application No. 09/773,818	)	DECISION ON REQUEST TO
Filed: February 2, 2001	)	WITHDRAW FROM RECORD
For: Attorney Docket No. 371922003400	)	

This is a decision on the request to withdraw as attorney of record under 37 C.F.R. § 1.36, filed November 8, 2001.

A grantable request to withdraw as attorney of record should indicate thereon the present mailing addresses of the attorney(s) who is/are withdrawing from the record and of the applicant. The request for withdrawal must be signed by every attorney seeking to withdraw or contain a clear indication that one attorney is signing on behalf of another/others. A request to withdraw will not be approved unless at least 30 (thirty) days would remain between the date of approval and the later of the expiration date of a time to file a response or the expiration date of the maximum time period which can be extended under 37 C.F.R. § 1.136(a).

The request meets all the above listed requirements.

The request is APPROVED.

All future communications from the Office will be directed to the below-listed address until otherwise notified by applicant.

Jose G. Dees, Special Program Examiner
Technology Center 2800
Semiconductors, Electrical and Optical
Systems and Components

cc: David Hill, Esq.
Finnegan, Henderson, Farabow, Garrett & Dunner, LLP
1300 I Street, N.W.
Suite 700
Washington, D.C. 20005-3315

1632

COPY OF PAPERS
ORIGINALLY FILED

DISK TO STIC

OIPE JC42 JAN 0 4 2002 PATENT & TRADEMARK OFFICE

JAN 0 4 2002 JC45 PATENT & TRADEMARK OFFICE

DATE:

PATENT
No. GA0182US

IN THE UNITED STATES PATENT AND TRADEMARK OFFICE

RECEIVED JAN 1 0 2002 TECH CENTER 1600/2900

APPLICANT: Landes, Gregory M.

APPLICATION NO: 09/773,861 GROUP NO: 1632

FILING DATE: February 1, 2001 EXAMINER: Unassigned

TITLE: ISOLATION AND IDENTIFICATION OF SECRETED PROTEINS

Box Sequence
Assistant Commissioner for Patents
Washington, D.C. 20231

CERTIFICATE OF MAILING BY "FIRST-CLASS MAIL"

I hereby certify that this paper or fee is being deposited on **December 3, 2001** with the United States Postal Service under 37 C.F.R. § 1.8(a) and is addressed to: Assistant Commissioner for Patents, Box Sequence, Washington, D.C. 20231

December 3, 2001
Date

Taryn Antalek
Taryn Antalek

RESPONSE TO OCTOBER 3, 2001 NOTICE TO COMPLY WITH REQUIREMENTS FOR PATENT APPLICATIONS CONTAINING NUCLEOTIDE SEQUENCE NUCLEOTIDE AND/OR AMINO ACID SEQUENCE DISCLOSURES

Responsive to the above notice and pursuant to 37 C.F.R. § § 1.821 – 1.824 Applicant submits herewith a paper copy and a computer readable copy of the Sequence Listing for the above-identified application. The formatting errors cited in the above notice have been corrected.

OIPE JC139
MAY 07 2002
PATENT & TRADEMARK OFFICE

UNITED STATES PATENT AND TRADEMARK OFFICE

COMMISSIONER FOR PATENTS
UNITED STATES PATENT AND TRADEMARK OFFICE
WASHINGTON, D.C. 20231
www.uspto.gov

APPLICATION NUMBER	FILING/RECEIPT DATE	FIRST NAMED APPLICANT	ATTORNEY DOCKET NUMBER
09/773,861	02/01/2001	Gregory M. Landes	GA0182US

CONFIRMATION NO. 5135

FORMALITIES LETTER

OC000000007590976

24536
GENZYME CORPORATION
LEGAL DEPARTMENT
15 PLEASANT ST CONNECTOR
FRAMINGHAM, MA 01701-9322

Date Mailed: 03/06/2002

NOTICE TO COMPLY WITH REQUIREMENTS FOR PATENT APPLICATIONS CONTAINING NUCLEOTIDE SEQUENCE AND/OR AMINO ACID SEQUENCE DISCLOSURES

Applicant is given **TWO MONTHS FROM THE DATE OF THIS NOTICE** within which to file the items indicated below to avoid abandonment. Extensions of time may be obtained under the provisions of 37 CFR 1.136(a).

- The computer readable form that has been filed with this application has been found to be damaged and/or unreadable as indicated on the attached CRF Diskette Problem Report. A substitute computer readable form must be submitted as required by 37 C.F.R. 1.825(d). Applicant must provide a substitute computer readable form (CRF) copy of the "Sequence Listing" and a statement that the content of the sequence listing information recorded in computer readable form is identical to the written (on paper or compact disc) sequence listing and, where applicable, includes no new matter, as required by 37 CFR 1.821(e), 1.821(f), 1.821(g), 1.825(b), or 1.825(d). If applicant desires the sequence listing in the instant application to be identical with that of another application on file in the U.S. Patent and Trademark Office, such request in accordance with 37 CFR 1.821(e) may be submitted in lieu of a new CRF.

For questions regarding compliance to these requirements, please contact:

- **For Rules Interpretation, call (703) 308-4216**
- **To Purchase PatentIn Software, call (703) 306-2600**
- **For PatentIn Software Program Help, call (703) 306-4119 or e-mail at patin21help@uspto.gov or patin3help@uspto.gov**

A copy of this notice MUST be returned with the reply.

Customer Service Center
Initial Patent Examination Division (703) 308-1202
PART 1 - ATTORNEY/APPLICANT COPY

REC'D MAR 13 2002

Box Seq
#5
03 CO

OIPE JC139
MAY 07 2002
PATENT & TRADEMARK OFFICE

PATENT
Attorney Docket No. GA0182US

IN THE UNITED STATES PATENT AND TRADEMARK OFFICE

APPLICANT: Landes, Gregory M.

APPLICATION NO: 09/773,861 GROUP NO: 1632

FILING DATE: February 1, 2001 EXAMINER: Unassigned

TITLE: ISOLATION AND IDENTIFICATION OF SECRETED PROTEINS

U.S. Patent and Trademark Office
2011 South Clark Place
Customer Window, Box Sequence
Crystal Plaza Two, Lobby, Room 1B03
Arlington, Virginia 22202

RESPONSE TO MARCH 6, 2002 NOTICE TO COMPLY WITH REQUIREMENTS FOR PATENT APPLICATIONS CONTAINING NUCLEOTIDE SEQUENCE NUCLEOTIDE AND/OR AMINO ACID SEQUENCE DISCLOSURES

Responsive to the above notice and pursuant to 37 C.F.R. § § 1.821 – 1.824 Applicant re-submits herewith a paper copy and a computer readable copy of the Sequence Listing for the above-identified application. Further to the formalities letter mailed March 6, 2002, a new diskette containing the sequence listing is submitted herewith.

Statement

I hereby state that (a) the content of the paper and computer readable copy submitted herewith are the same; (b) the content of the computer readable copy submitted herewith is the same as the Sequence Listing appearing on page 53 of the

original specification of U.S. Provisional Application Serial Number 60/180,582 as filed on February 4, 2000 (now on page 41 of U.S. Application Serial Number 09/773,861 filed February 1, 2001); and (c) this submission includes no new matter.

Respectfully submitted,

May 4, 2002
Date

Elizabeth Lassen
Elizabeth Lassen
Registration No. 31,845

Genzyme Corporation
15 Pleasant Street Connector
P.O. Box 9322
Framingham, Massachusetts 01701-9322
Telephone: (508) 270-2553
Facsimile: (508) 872-5415

UNITED STATES PATENT AND TRADEMARK OFFICE

COMMISSIONER FOR PATENTS
UNITED STATES PATENT AND TRADEMARK OFFICE
P.O. BOX 1450
ALEXANDRIA, VA 22313-1450
www.uspto.gov

Paper No. 17

JANE E REMILLARD ESQ
LAHIVE & COCKFILED LLP
28 STATE STREET
BOSTON, MA 02109

COPY MAILED

FEB 18 2004

OFFICE OF PETITIONS

In re Application of
David Thomas, et al.
Application No. 09/773,866
Filed: February 1, 2001
Attorney Docket No. PNJ-001

ON PETITION

This is a decision on the petition under 37 CFR 1.137(b), filed October 10, 2003, to revive the above-identified application.

The petition is **GRANTED.**

The above-identified application became abandoned for failure to reply in a timely manner to the non-final Office action mailed September 3, 2002, which set a shortened statutory period for reply of three (3) months. A three-month extension of time under the provisions of 37 CFR 1.136(a) was obtained. Accordingly, the application became abandoned on March 4, 2003.

The statement claiming small entity status in accordance with 37 CFR 1.27 embodied in the petition under 37 CFR 1.137(b) has been made of record and small entity status has been accorded.

The application file is being forwarded to Technology Center 1600, Art Unit 1644 for further processing.

Telephone inquiries concerning this decision should be directed to the undersigned at (703) 306-5594.

Retta Williams

Retta Williams
Petitions Examiner
Office of Petitions
Office of the Deputy Commissioner
for Patent Examination Policy

UNITED STATES PATENT AND TRADEMARK OFFICE

COMMISSIONER FOR PATENTS
UNITED STATES PATENT AND TRADEMARK OFFICE
P.O. BOX 1450
ALEXANDRIA, VA 22313-1450
www.uspto.gov

DOCKET CLERK
P.O. DRAWER 800889
DALLAS, TX 75380

COPY MAILED

NOV 07 2005

OFFICE OF PETITIONS

In re Application of	:	
Fillebrown et al.	:	
Application No. 09/773,885	:	
Filed: February 1, 2001	:	ON PETITION
Title of Invention:	:	
PERSONAL WIRELESS NETWORK	:	

This is a decision in response to the Petition Under 37 C.F.R. § 1.47 in Support of Declaration of Prior Invention Under 37 C.F.R. § 1.131, filed October 24, 2005, requesting the Declaration of Prior Invention Under 37 C.F.R. § 1.131 be made by the signing inventors on behalf of themselves and the nonsigning inventor. The petition is properly treated as a petition under 37 CFR 1.183 seeking waiver of 37 CFR 1.131 to the extent that it requires all of the named inventors execute the declaration filed thereunder[1].

This Petition is hereby **dismissed**.

Petitioner's assert that the claimed invention, the subject matter of which is described and claimed in the above identified application, was conceived prior to the effective date of the reference, and was diligently reduced to practice by all of the application's named inventors. Petitioner's further assert that, after diligent effort, inventor Lisa Fillebrown, is unavailable.

Petition fee

[1] Rule 47 only applies where, in the first instance, the signature of an originally named, or to be added, inventor cannot be obtained. As all of the inventors executed the original declaration, filed February 1, 2001, and thus made the application, 37 CFR 1.47 no longer applies to this case. See, 37 CFR 1.47; MPEP 201.03. Rather, the remedy lies under 37 CFR 1.183 when a required affidavit or declaration of a prior invention to overcome a cited patent or publication, under 37 CFR 1.131, is not executed in whole or in part by a previously signing inventor. See, MPEP 715.04.

Applicant is advised that the fee for a petition under 37 CFR 1.183, to suspend the rules, has increased to $400 effective December 8, 2004[2].

Here, Applicant has submitted $130 only. Before the petition may be considered on its merits, Applicant must submit the remaining balance.

Telephone inquiries concerning this matter should be directed to the undersigned at (571) 272-3232.

Derek L. Woods
Attorney
Office of Petitions

[2] Applicant is also advised that the fee for a petition under 37 CFR 1.147 has also increased to $200. Applicant is advised to check our web site at www.uspto.gov for the most current fee schedule.

UNITED STATES PATENT AND TRADEMARK OFFICE

COMMISSIONER FOR PATENTS
UNITED STATES PATENT AND TRADEMARK OFFICE
P.O. BOX 1450
ALEXANDRIA, VA 22313-1450
www.uspto.gov

DOCKET CLERK
P.O. DRAWER 800889
DALLAS, TX 75380

COPY MAILED

DEC 0 6 2005

OFFICE OF PETITIONS

In re Application of :
Fillebrown et al. :
Application No. 09/773,885 :
Filed: February 1, 2001 : ON PETITION
Title of Invention: :
PERSONAL WIRELESS NETWORK :

This is a decision in response to the Petition Under 37 C.F.R. § 1.47 in Support of Declaration of Prior Invention Under 37 C.F.R. § 1.131, filed October 24, 2005, requesting the Declaration of Prior Invention Under 37 C.F.R. § 1.131 be made by the signing inventors on behalf of themselves and the nonsigning inventor. The petition is properly treated as a petition under 37 CFR 1.183 seeking waiver of 37 CFR 1.131 to the extent that it requires all of the named inventors execute the declaration filed thereunder[1].

This Petition is hereby **dismissed**.

Petitioner's assert that the claimed invention, the subject matter of which is described and claimed in the above identified application, was conceived prior to the effective date of the reference, and was diligently reduced to practice by all of the application's named inventors. Petitioner's further assert that, after diligent effort, inventor Lisa Fillebrown, is unavailable.

In support of this assertion, Petitioner's file the Declaration of Robert A. Samra wherein Mr. Samra provides that, at his direction, Ms. Kathryn Thomas unsuccessfully attempted to contact Ms. Fillebrown at the address in the Assignee's records. Thereafter

[1] Rule 47 only applies where, in the first instance, the signature of an originally named, or to be added, inventor can not be obtained. As all of the inventors executed the original declaration, filed February 1, 2001, and thus made the application, 37 CFR 1.47 no longer applies to this case. See, 37 CFR 1.47; MPEP 201.03. Rather, the remedy lies under 37 CFR 1.183 when a required affidavit or declaration of a prior invention to overcome a cited patent or publication, under 37 CFR 1.131, is not executed in whole or in part by a previously signing inventor. See, MPEP 715.04.

Ms. Thomas searched the local telephone directories for a listing for Ms. Fillebrown, but was again unable to locate her. Mr. Samra then provides that he inquired with several employees and/or officers of the Assignee who had worked with Ms. Fillebrown while she was employed with the Assignee, but none of the employees had any knowledge as to the current location of Ms. Fillebrown.

No declaration from Ms. Thomas has been provided, nor have copies of the results of searches of the local telephone directories.

Applicable Law, Rule, or MPEP

As provided in MPEP 715.04,

> [a]ffidavits or declarations to overcome a rejection of a claim or claims must be made by the inventor or inventors of the subject matter of the rejected claim(s), a party qualified under 37 CFR 1.42, 1.43, or 1.47, or the assignee or other party in interest when it is not possible to produce the affidavit or declaration of the inventor(s).

Here, Applicant avers that inventor Fillebrown is unavailable to make the affidavit or declaration. As such, Applicant must qualify under 37 CFR 1.47(a).

37 CFR 1.47(a)

A grantable petition under 37 CFR 1.47(a) requires: (1) proof that the non-signing inventor cannot be reached or refuses to sign the oath or declaration after having been presented with the application papers (specification, claims and drawings); (2) an acceptable oath or declaration in compliance with 35 U.S.C. §§ 115 and 116; (3) the petition fee; and (4) a statement of the last known address of the non-signing inventor. Applicant lacks item (1) set forth above.

As to item (1), if an inventor is unavailable (cannot be reached), Petitioner must establish the exercise of diligent effort in trying to find or reach the nonsigning inventor. Where inability to find or reach a nonsigning inventor "after diligent effort" is the reason for filing under 37 CFR 1.47, a statement of facts should be submitted that fully describes the exact facts which are relied on to establish that a diligent effort was made. The statement of facts must be signed, where at all possible, by a person having

firsthand knowledge of the facts recited therein. Statements based on hearsay will not normally be accepted. Copies of documentary evidence such as internet searches, certified mail return receipts, cover letters of instructions, telegrams, that support a finding that the nonsigning inventor could not be found or reached should be made part of the statement. The steps taken to locate the whereabouts of the nonsigning inventor should be included statement of facts. It is important that the statement contain facts as opposed to conclusions. (Emphasis supplied). See, MPEP § 409.03(d).

Further correspondence with respect to this matter should be addressed as follows:

By mail: Commissioner for Patents
PO Box 1450
Alexandria, VA 22313-1450

By FAX: (571) 273-8300
Attn: Office of Petitions

By hand: Customer Service Window
Randolph Building
401 Dulany Street
Alexandria, VA 22314

Telephone inquiries concerning this decision should be directed to the undersigned at (571) 272-3232.

Derek L. Woods
Attorney
Office of Petitions

UNITED STATES PATENT AND TRADEMARK OFFICE

COMMISSIONER FOR PATENTS
UNITED STATES PATENT AND TRADEMARK OFFICE
P.O. BOX 1450
ALEXANDRIA, VA 22313-1450
www.uspto.gov

DOCKET CLERK
P.O. DRAWER 800889
DALLAS, TX 75380

COPY MAILED
MAR 16 2006
OFFICE OF PETITIONS

In re Application of	:	
Fillebrown et al.	:	
Application No. 09/773,885	:	
Filed: February 1, 2001	:	ON PETITION
Title of Invention:	:	
PERSONAL WIRELESS NETWORK	:	

This is a decision in response to the Request for Reconsideration, filed February 13, 2006, requesting the Declaration of Prior Invention Under 37 C.F.R. § 1.131 be made by the signing inventors on behalf of themselves and the nonsigning inventor. The petition is properly treated as a petition under 37 CFR 1.183 seeking waiver of 37 CFR 1.131 to the extent that it requires all of the named inventors execute the declaration filed thereunder[1].

This Petition is hereby **granted**.

Petitioner's assert that the claimed invention, the subject matter of which is described and claimed in the above identified application, was conceived prior to the effective date of the reference, and was diligently reduced to practice by all of the application's named inventors. Petitioner's further assert that, after diligent effort, inventor Lisa Fillebrown, is unavailable.

In support of this assertion, Petitioner's file the Declaration of Robert D. McCutcheon which establishes that non-signing inventor, Lisa Fillebrown, refuses to sign the declaration.

---

[1] Rule 47 only applies where, in the first instance, the signature of an originally named, or to be added, inventor can not be obtained. As all of the inventors executed the original declaration, filed February 1, 2001, and thus made the application, 37 CFR 1.47 no longer applies to this case. See, 37 CFR 1.47; MPEP 201.03. Rather, the remedy lies under 37 CFR 1.183 when a required affidavit or declaration of a prior invention to overcome a cited patent or publication, under 37 CFR 1.131, is not executed in whole or in part by a previously signing inventor. See, MPEP 715.04.

As noted in MPEP 715.04, an adequate showing may lead to acceptance of a declaration under 37 CFR 1.131 executed by less than all the named inventors of the claimed subject matter in question. Under the facts presented, it is agreed that justice requires waiver of the rules to the extent they require Lisa A. Fillebrown, Russell D. Kautz and Kenneth M. Glover tp declare. However, the favorable decision herein does not relieve applicants from their burden to establish that the invention was completed before the date of the references and that the claimed invention was the product of joint inventors. See, In re Carlson, 79 F.2d 900, 27 USPQ 400 (CCPA 1935).

The application is being referred to Technology Center 2155.

Telephone inquiries concerning this decision should be directed to the undersigned at (571) 272-3232.

Derek L. Woods
Attorney
Office of Petitions

UNITED STATES PATENT AND TRADEMARK OFFICE

Commissioner for Patents
United States Patent and Trademark Office
P.O. Box 1450
Alexandria, VA 22313-1450
www.uspto.gov

JUL 17 2009

OBLON, SPIVAK, MCCLELLAND MAIER
& NEUSTADT, P.C.
1940 DUKE STREET
ALEXANDRIA, VA 22314

In re Application of	:	**DECISION ON PETITION**
Hiroshi Shirakawa et al.	:	**FOR CONSIDERATION OF IDS**
Application No. 09/773,913	:	**UNDER 37 CFR 1.181**
Filed: February 2, 2001	:	
For: AUCTION SYSTEM AND METHOD		

This is a decision on Applicants' Petition under 37 CFR 1.181 filed on October 29, 2008 to consider the Information Disclosure Statement (IDS) filed on October, 10, 2006.

The Petition is dismissed as **MOOT.**

Applicants have requested that the Director instruct the Examiner to consider the IDS filed on October 10, 2006 and to sign and return the IDS indicating a consideration of the documents and references listed on the form.

A review of the record shows that an initialed copy of the referenced IDS was mailed to Applicants on December 10, 2008. As well, a communication was mailed concurrently stating that the IDS was entered and considered.

SUMMARY: The Petition is dismissed as **MOOT.**

Any questions regarding this decision should be directed to Charles R. Kyle, Supervisory Patent Examiner, at (571) 272-6746.

Wynn Coggins, Director
Technology Center 3600
(571) 272-5350

crk/tlp: 7/10/2009

UNITED STATES PATENT AND TRADEMARK OFFICE

Commissioner for Patents
United States Patent and Trademark Office
P.O. Box 1450
Alexandria, VA 22313-1450
www.uspto.gov

SCHIFF HARDIN, LLP
PATENT DEPARTMENT
6600 SEARS TOWER
CHICAGO, IL 60606-6473

COPY MAILED

APR 06 2007

OFFICE OF PETITIONS

ON PETITION

In re Application of :
Hans-Erich Reinfelder et al :
Application No. 09/773,949 :
Filed: February 1, 2001 :
Attorney Docket No. P96,0463 01 :

This is a decision on the petition filed, November 2, 2006 under 37 CFR 1.137(b), to revive the above-identified application.

The petition is **GRANTED.**

The above-identified application became abandoned for failure to reply within the meaning of 37 CFR 1.113 in a timely manner to the final Office action mailed March 3, 2006, which set a shortened statutory period for reply of three (3) months. Three-month extension of time under the provisions of 37 CFR 1.136(a) were obtained. Accordingly, the above-identified application became abandoned on September 4, 2006.

The above-identified application is being revived solely for purposes of continuity with a Request For Continued Examination (RCE) filed on November 2, 2006.

Telephone inquiries concerning this decision should be directed to Irvin Dingle at (571) 272-3210.

This matters is being referred to Technology Center AU 3621 for further processing.

Irvin Dingle
Petitions Examiner
Office of Petitions

UNITED STATES PATENT AND TRADEMARK OFFICE

Commissioner for Patents
United States Patent and Trademark Office
PO Box 1450
Arlington, VA 22313-1450
www.uspto.gov

Paper No. 12

COPY MAILED

JUL 0 8 2003

OFFICE OF PETITIONS

Hickman Palermo Truong & Becker
1600 Willow Street
San Jose, CA 95125

In re Application of
David Abkowitz et al.
Application No. 09/773,982
Filed: January 31,2001
Attorney Docket No. 50277-0386

DECISION ON PETITION
UNDER 37 CFR 1.137(B)

This is a decision on the petition under 37 CFR 1.137(f), filed June 10, 2003, which is being treated as a petition under 37 CFR 1.137(b), to revive the instant non-provisional application.

The petition is Granted.

Petitioner states that the instant nonprovisional application is the subject of a counterpart international application filed on February 22, 2001. However, the U.S. Patent and Trademark Office was unintentionally not notified of this filing within 45 days subsequent to the filing of the international application.

In view of the above, this application became abandoned pursuant to 35 U.S.C. 122(b)(2)(B)(iii) and 37 CFR 1.213(c) for failure to timely notify the Office of the filing of an application in a foreign country, or under a multilateral international agreement, that requires publication of applications 18 months after filing.

A petition under 37 CFR 1.137(f) must be accompanied by:

(1) the reply, which is met by the notification of such filing in a foreign country or under a multinational treaty;
(2) the petition fee as set forth in 37 CFR 1.17(m); and
(3) a statement that the entire delay in filing the required reply from the due date of the reply until the filing of a grantable petition was unintentional.

The instant petition has been found to be in compliance with 37 CFR 1.137(f). Accordingly, the failure to timely notify the Office of a foreign or international filing within 45 days after the date of filing of such foreign or international application as provided by 35 U.S.C. 122(b)(2)(B)(iii) and 37 CFR 1.213(c) is accepted as having been unintentionally delayed.

The previous Request and Certification under 35 U.S.C. § 122 (b) (2) (B) (i) has been rescinded.

The application file is being forwarded to Technology Center AU 2157 for examination in due course.

Telephone inquiries regarding this decision should be directed to Latrice Bond at (703) 308-6911.

Latrice Bond

Latrice Bond
Paralegal Specialist
Office of Petitions
Office of the Deputy Commissioner
For Patent Examination Policy

Frances Hicks

Frances Hicks
Lead Petitions Examiner
Office of Petitions
Office of the Deputy Commissioner
For Patent Examination Policy

UNITED STATES PATENT AND TRADEMARK OFFICE

COMMISSIONER FOR PATENTS
UNITED STATES PATENT AND TRADEMARK OFFICE
P.O. BOX 1450
ALEXANDRIA, VA 22313-1450
www.uspto.gov

Paper No. 10

HARNESS, DICKEY & PIERCE, P.L.C.
7700 BONHOMME, SUITE 400
ST. LOUIS, MO 63105

COPY MAILED

MAY 1 3 2003

OFFICE OF PETITIONS

In re Application of :
Robert Daniel Hunt :
Application No. 09/774,110 :
Filed: January 31, 2001 :
Attorney Docket No. 2487-000005/US :

ON PETITION

This is a decision on the petition under 37 CFR 1.137(b), filed April 15, 2003, to revive the above-identified application.

The petition is **GRANTED.**

The above-identified application became abandoned for failure to reply in a timely manner to the Restriction Requirement mailed July 1, 2002, which set a shortened statutory period for reply of one (1) month or thirty (30) days (whichever is later). No extensions of time under the provisions of 37 CFR 1.136(a) were obtained. Accordingly, the above-identified application became abandoned on August 2, 2002.

Telephone inquiries concerning this decision should be directed to the undersigned at (703) 306-5594.

The application file is being forwarded to Technology Center 3600, Art Unit 3644 for further processing.

Retta Williams

Retta Williams
Petitions Examiner
Office of Petitions
Office of the Deputy Commissioner
for Patent Examination Policy

UNITED STATES PATENT AND TRADEMARK OFFICE

COMMISSIONER FOR PATENTS
UNITED STATES PATENT AND TRADEMARK OFFICE
P.O. BOX 1450
ALEXANDRIA, VA 22313-1450
www.uspto.go

Paper No. 10

MAIL

APR 0 2 2004

DIRECTOR OFFICE
TECHNOLOGY CENTER 2600

COOLEY GODWARD LLP
ATTN: PATENT GROUP
11951 FREEDOM DRIVE, SUITE 1700
ONE FREEDOM SQUARE- RESTON TOWN CENTER
RESTON VA 20190-5061

In re Application of	:
Brad W. BLUMBERG, et al.	: DECISION GRANTING PETITION
Application No. 09/774,119	: TO RESET PERIOD FOR REPLY
Filed: January 31, 2001	:
For: POSITION-BASED INFORMATION	:
ACCESS DEVICE AND METHOD OF	:
SEARCHING	:

This is a decision on the petition filed on January 22, 2004, requesting that the shortened statutory period for reply set forth in the Office communication mailed on October 24, 2003 be reset to run from the date on which the Office communication was actually received at the correspondence address of record.

The petition is **GRANTED**.

Petitioner provided a statement that the Office communication in question was received at the correspondence address of record on January 9, 2004. The petition was filed within two weeks of receipt of the Office communication. A substantial portion of the set reply period had elapsed on the date of receipt. The petition meets the criteria for restarting a time period to respond to an Office action as set forth in MPEP § 710.06.

Accordingly, the shortened statutory period that was originally set forth in the Office action originally mailed on October 24, 2003 is hereby reset to run THREE MONTHS FROM THE RECEIPT DATE OF January 9, 2004.

Kenneth A. Wieder
Special Program Examiner
Technology Center 2600
Communications

UNITED STATES PATENT AND TRADEMARK OFFICE

Commissioner for Patents
United States Patent and Trademark Office
P.O. Box 1450
Alexandria, VA 22313-1450
www.uspto.gov

COOLEY GODWARD
ATTN: PATENT GROUP
11951 FREEDOM DRIVE, SUITE 1700
ONE FREEDOM SQUARE-RESTON TOWN CTR.
RESTON VA 20190-5061

COPY MAILED

OCT 07 2005

OFFICE OF PETITIONS

In re Application of	:	
Brad W. Blumberg et al	:	
Application No. 09/774,119	:	ON PETITION
Filed: January 31, 2001	:	
Attorney Docket No. SMTR001/02US	:	

This is a decision on the petition, filed September 30, 2005, under 37 CFR 1.313(c)(2) to withdraw the above-identified application from issue after payment of the issue fee.

The petition is **GRANTED.**

The above-identified application is withdrawn from issue for consideration of a submission under 37 CFR 1.114 (request for continued examination). See 37 CFR 1.313(c)(2).

Petitioner is advised that the issue fee paid on February 3, 2005 in the above-identified application cannot be refunded. If, however, the above-identified application is again allowed, petitioner may request that it be applied towards the issue fee required by the new Notice of Allowance.[1]

Telephone inquiries should be directed to the undersigned at (571) 272-3208.

The examiner of Technology Center AU 2681 will consider the request for continued examination under 37 CFR 1.114.

Karen Creasy

Karen Creasy
Petitions Examiner
Office of Petitions
Office of the Deputy Commissioner
for Patent Examination Policy

---

[1] The request to apply the issue fee to the new Notice may be satisfied by completing and returning the new Issue Fee Transmittal Form PTOL-85(b), which includes the following language thereon: "Commissioner for Patents is requested to apply the Issue Fee and Publication Fee (if any) or re-apply any previously paid issue fee to the application identified above." Petitioner is advised that, whether a fee is indicated as being due or not, the Issue Fee Transmittal Form **must** be completed and timely submitted to avoid abandonment. Note the language in bold text on the first page of the Notice of Allowance and Fee(s) Due (PTOL-85).

UNITED STATES
PATENT AND
TRADEMARK OFFICE

UNDER SECRETARY OF COMMERCE FOR INTELLECTUAL PROPERTY
AND DIRECTOR OF THE UNITED STATES PATENT AND TRADEMARK OFFICE
WASHINGTON, D.C. 20231
WWW.USPTO.GOV

MAY - 8 2003

#10

ROTHWELL, FIGG, ERNST & MANBECK, P.C.
1425 K STREET, N.W.
SUITE 800
WASHINGTON DC 20005

In re Application of: Jeffrey Dickinson et al. :
Serial No.:09/774,171 :
Filed: February 1, 2001 : DECISION ON PETITION
Attorney Docket No.: 108129-00004 :

This is in response to applicant's petition, filed March 11, 2003 under 37 CFR 1.181, to withdraw the abandonment of the above identified application based on non-receipt of an Office action and to restore the application to a pending status.

A review of the file history shows that the examiner mailed a non-final rejection setting a 3 month shortened statutory period for reply to applicanton March 27, 2002. On December 18, 2002 the examiner mailed a notice of abandonment. Further review reveals that the technical support staff has already mailed a notice of rescinded abandonment and restarted the time period for response to the outstanding Office action on February 27, 2003. In view thereof, applicant's petition is moot.

The Request to Withdraw Abandonment under 37 CFR 1.181 is **DISMISSED**.

The application will be forwarded to the examiner for prompt mailing of a new Notice of Allowance and Issue Fee Due and the Notice of Allowability.

Should there be any questions with regard to this letter please contact Bruce Campell by letter addressed to the Director, Technology Center 1600, Washington, DC 20231, or by telephone at (703) 308-4205 or by facsimile transmission at (703) 746-5006.

John Doll
Director, Technology Center 1600

UNITED STATES
PATENT AND
TRADEMARK OFFICE

UNDER SECRETARY OF COMMERCE FOR INTELLECTUAL PROPERTY
AND DIRECTOR OF THE UNITED STATES PATENT AND TRADEMARK OFFICE
WASHINGTON, D.C. 20231
WWW.USPTO.GOV

APR 9 2002

FISH & NEAVE
1251 AVENUE OF THE AMERICAS
50TH FLOOR
NEW YORK NY 10020-1105

#15

In re Application of	:
Sharron G. Penn et al	:
Serial No.: 09/774,203	: PETITION TO MAKE SPECIAL
Filed: January 29, 2001	:
Attorney Docket No.: Aeomica-1	:

This is in response to applicants' petition filed August 21, 2001, to make the above-identified application special under the provisions of 37 CFR 1.102(c), based on actual infringement. The delay in acting on this petiton is regretted.

Applicant has satisfied the provisions set forth in M.P.E.P. 708.02, II. Therefor the petition is **GRANTED**.

The application will be forwarded to the examiner for action on the merits commensurate with this decision.

Should there be any questions with regard to this letter please contact William R. Dixon, Jr. by letter addressed to the Director, Technology Center 1600, Washington, DC 20231, or by telephone at (703) 308-3824 or by facsimile transmission at (703) 305-7230.

William R. Dixon, Jr.
Special Program Examiner
Technology Center 1600

UNITED STATES PATENT AND TRADEMARK OFFICE

COMMISSIONER FOR PATENTS
UNITED STATES PATENT AND TRADEMARK OFFICE
WASHINGTON, D.C. 20231
www.uspto.gov

MAILED

MAR 1 0 2003

Technology Center 2100

Paper No. 14

Fenwick & West LLP
Silicon Valley Center
801 California Street
Mountain View, CA 94041

In re Application of: Daniel Goodman, et al.	)	
Application No. 09/774,236	)	**DECISION ON REQUEST FOR**
Filed: January 29, 2001	)	**WITHDRAWAL AS ATTORNEY**
For: METHOD AND SYSTEM FOR COPY	)	
PROTECTION OF DATA CONTENT	)	

This is a decision on the Request To Withdraw from Representation filed February 19, 2003.

A grantable request to withdraw as attorney of record should indicate thereon the present mailing addresses of the attorney(s) who is/are withdrawing from the record and of the applicant. The request for withdrawal must be signed by every attorney seeking to withdraw or contain a clear indication that one attorney is signing on behalf of another/others. A request to withdraw will not be approved unless at least 30 (thirty) days would remain between the date of approval and the later of the expiration date of a time to file a response or the expiration date of the maximum time period which can be extended under 37 C.F.R. § 1. 136(a). The effective date of withdrawal being the date of decision and not the date of request. See M.P.E.P. § 402.06. 37 C.F.R. § 1.36 further requires that the applicant or patent owner be notified of the withdrawal of the attorney or agent.

The request is **GRANTED**.

All future communications from the Office will be directed to the below-listed address until otherwise notified by applicant. This correspondence address is provided by the withdrawn attorney(s). Applicant is reminded of the obligation to promptly notify the Patent and Trademark Office (Office) of any change in correspondence address to ensure receipt of all communications from the Office.

Vincent N. Trans
Special Programs Examiner
Technology Center 2100
Computer Architecture and Software
(703) 305-9750

cc: Marc Sockol
Squire, Sanders & Dempsey L.L.P.
600 Hansen Way
Palo Alto, CA 94304-1043

UNITED STATES PATENT AND TRADEMARK OFFICE

UNITED STATES DEPARTMENT OF COMMERCE
United States Patent and Trademark Office
Address: COMMISSIONER FOR PATENTS
P.O. Box 1450
Alexandria, Virginia 22313-1450
www.uspto.gov

APPLICATION NO.	FILING DATE	FIRST NAMED INVENTOR	ATTORNEY DOCKET NO.	CONFIRMATION NO.
09/774,256	01/29/2001	Makarand P. Gore	10002554-1	9980

7590 03/08/2005

HEWLETT-PACKARD COMPANY
Intellectual Property Administration
P.O. Box 272400
Fort Collins, CO 80527-2400

EXAMINER
HESS, BRUCE H

ART UNIT	PAPER NUMBER
1774	

DATE MAILED: 03/08/2005

Please find below and/or attached an Office communication concerning this application or proceeding.

UNITED STATES PATENT AND TRADEMARK OFFICE

Commissioner for Patents
United States Patent and Trademark Office
P.O. Box 1450
Alexandria, VA 22313-1450
www.uspto.gov

MAR 8 2005

In re Application of	:	
Makarand P. Gore	:	NOTICE OF WITHDRAWAL
Serial No. 09/774,256	:	FROM ISSUE
Filed: January 29, 2001	:	UNDER 37 CFR 1.313(b)
For: INKJET PRINTED IMAGES WITH WET-	:	
TABLE, FUSIBLE TONER	:	

The above-identified application is withdrawn from issue after payment of the issue fee due to reopening of prosecution. See 37 CFR 1.313 (b).

The above-identified application is hereby withdrawn from issue.

The issue fee is refundable upon written request. If, however, the application is again found allowable, the issue fee can be applied toward payment of the issue fee in the amount identified on the new Notice of Allowance and Issue Fee Due upon written request. This request and any balance due must be received on or before the due date noted in the new Notice of Allowance in order to prevent abandonment of the application.

Telephone inquiries should be directed to Rena Dye at (571) 272-3186.

The above-identified application is being forwarded to the examiner for prompt appropriate action, including notifying applicant of the new status of this application.

Jacqueline Stone, Director
Technology Center 1700
Chemical and Materials Engineering

HEWLETT-PACKARD COMPANY
Intellectual Property Administration
P. O. Box 272400
Fort Collins, CO 80527-2400

UNITED STATES PATENT AND TRADEMARK OFFICE

UNITED STATES DEPARTMENT OF COMMERCE
United States Patent and Trademark Office
Address: COMMISSIONER FOR PATENTS
P.O. Box 1450
Alexandria, Virginia 22313-1450
www.uspto.gov

APPLICATION NO.	FILING DATE	FIRST NAMED INVENTOR	ATTORNEY DOCKET NO.	CONFIRMATION NO.
09/774,266	01/30/2001	Lotfi Hedhli	3055-002-01	9985

33432 7590 11/10/2004
KILYK & BOWERSOX, P.L.L.C.
53 A EAST LEE STREET
WARRENTON, VA 20186

EXAMINER
CHEUNG, WILLIAM K

ART UNIT	PAPER NUMBER
1713	

DATE MAILED: 11/10/2004

Please find below and/or attached an Office communication concerning this application or proceeding.

UNITED STATES PATENT and TRADEMARK OFFICE

COMMISSIONER FOR PATENTS
UNITED STATES PATENT AND TRADEMARK OFFICE
P.O. BOX 1450
ALEXANDRIA, VA 23313-1450
WWW.USPTO.GOV

Mailed:

DWW
Paper No.

In re Application of Hedhli et al.
Serial No.: 09/774,266
Filed: January 30, 2001.

DECISION ON PETITION UNDER *37 CFR 1.48(a)*

Title: FLUOROPOLYMER RESINS CONTAINING IONIC OR IONIZABLE GROUPS AND PRODUCTS CONTAINING THE SAME

This is a decision on the PETITION TO CORRECT INVENTORSHIP IN A NON-PROVISIONAL PATENT APPLICATION filed July 30, 2004 to correct inventorship under 37 CFR 1.48(a) by adding the names of Michael Foure and Ramin Amin-Sanayei to the list of inventors of the instant application.

It is noted that the applicant has met the requirements of 37 C.F.R. § 1.48(a) by (1) submitting a request to correct the inventorship that sets forth the desired inventorship change; (2) providing a statement from each person being added as an inventor that the error in inventorship occurred without deceptive intention on his or her part; (3) providing a declaration of the actual inventors as required by 37 C.F.R. § 1.63; (4) providing the processing fee set forth in 1.17(i); and, (5) providing the written consent of the assignee.

The request is **GRANTED**.

The application file is being forwarded to the appropriate section of the Patent and Trademark Office for correction of the record.

David W. Wu
Supervisory Patent Examiner
Art Unit 1713
Technology Center 1700

KILYK & BOWERSON, P.L.L.C.
53 A East Lee Street
Warrenton, VA 20186

UNITED STATES PATENT AND TRADEMARK OFFICE

COMMISSIONER FOR PATENTS
UNITED STATES PATENT AND TRADEMARK OFFICE
WASHINGTON, D.C. 20231
www.uspto.gov

Paper No. 7

Akin Gump Strauss Hauer & Feld, LLP
1900 Frost Bank Plaza
816 Congress Avenue
Austin, Texas 78701

MAIL

NOV 2 6 2001

DIRECTOR OFFICE
TECHNOLOGY CENTER 2100

In re Application of: Anand Prahlad et al.)
Application No. 09/774,272)
Filed: January 31, 2001) **DECISION ON REQUEST FOR**
For: EMAIL ATTACHMENT) **WITHDRAWAL AS ATTORNEY**
MANAGEMENT IN A COMPUTER)
SYSTEM)

This is a decision on the Request To Withdraw from Representation filed September 25, 2001.

A grantable request to withdraw as attorney of record should indicate thereon the present mailing addresses of the attorney(s) who is/are withdrawing from the record and of the applicant. The request for withdrawal must be signed by every attorney seeking to withdraw or contain a clear indication that one attorney is signing on behalf of another/others. A request to withdraw will not be approved unless at least 30 (thirty) days would remain between the date of approval and the later of the expiration date of a time to file a response or the expiration date of the maximum time period which can be extended under 37 C.F.R. § 1. 136(a). The effective date of withdrawal being the date of decision and not the date of request. See M.P.E.P. § 402.06. 37 C.F.R. § 1.36 further requires that the applicant or patent owner be notified of the withdrawal of the attorney or agent.

The request is deficient in the following aspects: (1) each attorney for whom withdrawal is requested must be individually listed - a referral to a power of attorney must identify it unambiguously (for example, referring to the date of filing); (2) there is no statement that Gary W. Hamilton is signing on behalf of the other attorneys of record and is ***authorized*** to sign on behalf of the other attorneys. Furthermore, there is no indication that the client has been apprised of this request for withdrawal. Therefore, the request is **DENIED**.

All future communications from the Office will continue to be directed to the above-listed address until otherwise notified by applicant. Applicant is reminded of the obligation to promptly notify the Office of any change in correspondence address to ensure receipt of all communications from the Office.

Pinchus M. Laufer
Special Programs Examiner
Technology Center 2100
Computer Architecture, Software, and Electronic Commerce
(703) 306-4160

UNITED STATES PATENT AND TRADEMARK OFFICE

COMMISSIONER FOR PATENTS
UNITED STATES PATENT AND TRADEMARK OFFICE
WASHINGTON, D.C. 20231
www.uspto.gov

Paper No. 6

Akin Gump Strauss Hauer & Feld, LLP
1900 Frost Bank Plaza
816 Congress Avenue
Austin, Texas 78701

MAIL

NOV 19 2001

DIRECTOR OFFICE
TECHNOLOGY CENTER 2100

In re Application of: Anand Prahlad et al.)
Application No. 09/774,302)
Filed: January 30, 2001)
For: LOGICAL VIEW WITH GRANULAR ACCESS TO EXCHANGE DATA MANAGED BY A MODULAR DATA AND STORAGE MANAGEMENT SYSTEM)

DECISION ON REQUEST FOR WITHDRAWAL AS ATTORNEY

This is a decision on the Request To Withdraw from Representation filed September 28, 2001.

A grantable request to withdraw as attorney of record should indicate thereon the present mailing addresses of the attorney(s) who is/are withdrawing from the record and of the applicant. The request for withdrawal must be signed by every attorney seeking to withdraw or contain a clear indication that one attorney is signing on behalf of another/others. A request to withdraw will not be approved unless at least 30 (thirty) days would remain between the date of approval and the later of the expiration date of a time to file a response or the expiration date of the maximum time period which can be extended under 37 C.F.R. § 1. 136(a). The effective date of withdrawal being the date of decision and not the date of request. See M.P.E.P. § 402.06. 37 C.F.R. § 1.36 further requires that the applicant or patent owner be notified of the withdrawal of the attorney or agent.

The request is deficient in the following aspects: (1) each attorney for whom withdrawal is requested must be individually listed - a referral to a power of attorney must identify it unambiguously (for example, referring to the date of filing); (2) there is no statement that Gary W. Hamilton is signing on behalf of the other attorneys of record and is ***authorized*** to sign on behalf of the other attorneys. Furthermore, there is no indication that the client has been apprised of this request for withdrawal. Therefore, the request is **DENIED**.

All future communications from the Office will continue to be directed to the above-listed address until otherwise notified by applicant. Applicant is reminded of the obligation to promptly notify the Office of any change in correspondence address to ensure receipt of all communications from the Office.

Pinchus M. Laufer
Special Programs Examiner
Technology Center 2100
Computer Architecture, Software, and Electronic Commerce
(703) 306-4160

UNITED STATES PATENT AND TRADEMARK OFFICE

Commissioner for Patents
United States Patent and Trademark Office
P.O. Box 1450
Alexandria, VA 22313-1450
www.uspto.gov

Paper No. 13

SCHNECK & SCHNECK
P.O. BOX 2-E
SAN JOSE, CA 95109-0005

COPY MAILED

MAY 1 9 2004

OFFICE OF PETITIONS

ON PETITION

In re Application of :
Gary W. Ferrell :
Application No. 09/774,303 :
Filed: January 29, 2001 :
Attorney Docket No. L-Tech 110CON :

This is a decision on the petition under 37 CFR 1.137(b), filed May 10, 2004, to revive the above-identified application.

The petition is **GRANTED**.

The above-identified application became abandoned for failure to reply in a timely manner to the non-final Office action mailed August 15, 2001, which set a shortened statutory period for reply of three (3) months. No extensions of time under the provisions of 37 CFR 1.136(a) were obtained. Accordingly, the above-identified application became abandoned on November 16, 2001.

An extension of time under 37 CFR 1.136 must be filed prior to the expiration of the maximum extendable period for reply. See In re Application of S., 8 USPQ2d 1630, 1631 (Comm'r Pats. 1988). Accordingly, since the $950 extension of time submitted with the petition on May 10, 2004 was subsequent to the maximum extendable period for reply, this fee is unnecessary and will be credited to petitioner's deposit account.

The above-identified application has been abandoned for an extended period of time. The Patent and Trademark Office is relying on petitioner's duty of candor and good faith and accepting the statement that the entire delay in filing the required reply from the due date for the reply until the filing of a grantable petition pursuant to 37 CFR 1.137(b) was unintentional. See Changes to Patent Practice and Procedure, 62 Fed. Reg. at 53160 and 53178; 1203 Off. Gaz. Pat. Office at 88 and 103 (responses to comments 64 and 109) (applicant obligated under 37 CFR 10.18 to inquire into the underlying facts and circumstances when providing the statement required by 37 CFR 1.137(b) to the Patent and Trademark Office).

Telephone inquiries concerning this decision should be directed to Irvin Dingle at (703) 306-5684.

The application file is being forwarded to Technology Center AU 2813 for further processing.

Irvin Dingle
Petitions Examiner
Office of Petitions
Office of the Deputy Commissioner
for Patent Examination Policy

UNITED STATES PATENT AND TRADEMARK OFFICE

UNITED STATES DEPARTMENT OF COMMERCE
United States Patent and Trademark Office
Address: COMMISSIONER FOR PATENTS
P.O. Box 1450
Alexandria, Virginia 22313-1450
www.uspto.gov

APPL NO.	FILING OR 371 (c) DATE	ART UNIT	FIL FEE REC'D	ATTY.DOCKET NO	DRAWINGS	TOT CLMS	IND CLMS
09/774,328	01/30/2001	1712	782	ESSR:037US/MBW		24	2

CONFIRMATION NO. 5074

CORRECTED FILING RECEIPT

OC000000013679894

Mark B. Wilson
FULBRIGHT & JAWORSKI L.L.P.
600 Congress Avenue, Suite 2400
Austin, TX 78701

Date Mailed: 08/31/2004

Receipt is acknowledged of this regular Patent Application. It will be considered in its order and you will be notified as to the results of the examination. Be sure to provide the U.S. APPLICATION NUMBER, FILING DATE, NAME OF APPLICANT, and TITLE OF INVENTION when inquiring about this application. Fees transmitted by check or draft are subject to collection. Please verify the accuracy of the data presented on this receipt. **If an error is noted on this Filing Receipt, please write to the Office of Initial Patent Examination's Filing Receipt Corrections, facsimile number 703-746-9195. Please provide a copy of this Filing Receipt with the changes noted thereon. If you received a "Notice to File Missing Parts" for this application, please submit any corrections to this Filing Receipt with your reply to the Notice. When the USPTO processes the reply to the Notice, the USPTO will generate another Filing Receipt incorporating the requested corrections (if appropriate).**

Applicant(s)

Jean-Pierre Degand, Paris, FRANCE;
Anne Robert, Villecresne, FRANCE;

Power of Attorney:

Louis Pirkey--22393
David D. Bahler--30932
David Parker--32165
Richard J. Groos--32231
Stephen D. Dellett--32564
William Barber--33154
Michael Metteauer--34875
John Bruckner--35816
Mark B. Wilson--37259
Steven Highlander--37642

Domestic Priority data as claimed by applicant

This application is a CON of PCT/FR99/01887 07/30/1999

Foreign Applications

FRANCE 98/09826 07/31/1998

If Required, Foreign Filing License Granted: 03/12/2001

The number of your priority application, to be used for filing abroad under the Paris Convention is,
US09/774,328

Projected Publication Date: Not Applicable

Non-Publication Request: No

Early Publication Request: No

Title

ORGANIC GLASS OPHTHALMIC LENS HAVING AN IMPACT-RESISTANT PRIMER LAYER BASED ON A POLYURETHANE LATEX AND ITS MANUFACTURING PROCESS

Preliminary Class

428

LICENSE FOR FOREIGN FILING UNDER
Title 35, United States Code, Section 184
Title 37, Code of Federal Regulations, 5.11 & 5.15

GRANTED

The applicant has been granted a license under 35 U.S.C. 184, if the phrase "IF REQUIRED, FOREIGN FILING LICENSE GRANTED" followed by a date appears on this form. Such licenses are issued in all applications where the conditions for issuance of a license have been met, regardless of whether or not a license may be required as set forth in 37 CFR 5.15. The scope and limitations of this license are set forth in 37 CFR 5.15(a) unless an earlier license has been issued under 37 CFR 5.15(b). The license is subject to revocation upon written notification. The date indicated is the effective date of the license, unless an earlier license of similar scope has been granted under 37 CFR 5.13 or 5.14.

This license is to be retained by the licensee and may be used at any time on or after the effective date thereof unless it is revoked. This license is automatically transferred to any related applications(s) filed under 37 CFR 1.53(d). This license is not retroactive.

The grant of a license does not in any way lessen the responsibility of a licensee for the security of the subject matter as imposed by any Government contract or the provisions of existing laws relating to espionage and the national security or the export of technical data. Licensees should apprise themselves of current regulations especially with respect to certain countries, of other agencies, particularly the Office of Defense Trade Controls, Department of State (with respect to Arms, Munitions and Implements of War (22 CFR 121-128)); the Office of Export Administration, Department of Commerce (15 CFR 370.10 (j)); the Office of Foreign Assets Control, Department of Treasury (31 CFR Parts 500+) and the Department of Energy.

NOT GRANTED

No license under 35 U.S.C. 184 has been granted at this time, if the phrase "IF REQUIRED, FOREIGN FILING LICENSE GRANTED" DOES NOT appear on this form. Applicant may still petition for a license under 37 CFR 5.12, if a license is desired before the expiration of 6 months from the filing date of the application. If 6 months has lapsed from the filing date of this application and the licensee has not received any indication of a secrecy order under 35 U.S.C. 181, the licensee may foreign file the application pursuant to 37 CFR 5.15(b).

UNITED STATES PATENT AND TRADEMARK OFFICE

UNITED STATES DEPARTMENT OF COMMERCE
United States Patent and Trademark Office
Address: COMMISSIONER FOR PATENTS
P.O. Box 1450
Alexandria, Virginia 22313-1450
www.uspto.gov

Baker Botts L.L.P
910 Louisiana Street, One Shell Plaza
HOUSTON, TX 77002

Mail Date: 04/20/2010

Applicant	: David J. Lyon	: DECISION ON REQUEST FOR
Patent Number	: 7577577	: RECALCULATION of PATENT
Issue Date	: 08/18/2009	: TERM ADJUSTMENT IN VIEW
Appliction No	: 09/774,396	: OF WYETH AND NOTICE OF INTENT TO
Filed	: 01/31/2001	: ISSUE CERTIFICATE OF CORRECTION
		:

The Request for Recalculation is **GRANTED** to the extent indicated.

The patent term adjustment has been determined to be **922** days. The USPTO will *sua sponte* issue a certificate of correction reflecting the amount of PTA days determined by the recalculation.

Prior to the issuance of the certificate of correction, the USPTO will afford patentee an opportunity to be heard and request reconsideration. Accordingly, patentee has **one month or thirty (30) days**, whichever is longer, to file a request for reconsideration of this patent term adjustment calculation. See 35 U.S.C. 154(b)(3)(B)(ii) and 37 CFR 1.322(a)(4). No extensions of time will be granted under 37 CFR 1.136.

Patentee should use document code PET.OP if electronically filing a request for reconsideration of this patent term adjustment calculation. The patentee must also include the information required by 37 CFR 1.705(b)(2) and the fee required by 37 CFR 1.18(e). If patentee does not file a timely request for reconsideration of this patent term adjustment calculation including the information required by 37 CFR 1.705(b)(2) and the fee required by 37 CFR 1.18(e), the USPTO will issue a certificate of correction reflecting the PTA determination noted above.

Patentee should be aware that in order to preserve the right to review in the United States District Court for the District of Columbia of the USPTO patent term adjustment determination, patentee must ensure that he or she also take the steps required under 35 U.S.C. 154(b)(4)(A) in a timely manner. Nothing in the request for recalculation should be construed as providing an alternative time frame for commencing a civil action under 35 U.S.C. 154(b)(4)(A).

Any questions concerning this decision should be directed to the Office of Patent Legal Administration at 571-272-7702.

UNITED STATES PATENT AND TRADEMARK OFFICE

UNITED STATES DEPARTMENT OF COMMERCE
United States Patent and Trademark Office
Address: COMMISSIONER FOR PATENTS
P.O. Box 1450
Alexandria, Virginia 22313-1450
www.uspto.gov

Baker Botts L.L.P
910 Louisiana Street, One Shell Plaza
HOUSTON, TX 77002

Mail Date: 05/17/2010

Applicant : David J. Lyon
Patent Number : 7577577
Issue Date : 08/18/2009
Application No : 09/774,396
Filed : 01/31/2001

: NOTICE CONCERNING IMPROPER
: CALCULATION OF PATENT TERM
: ADJUSTMENT BASED UPON USPTO
: IMPROPERLY MEASURING REDUCTION
: PERIOD UNDER 37 CFR 1.704(c)(10).

The United States Patent and Trademark Office (USPTO) discovered that in processing the recent recalculation decisions mailed in response to patentee's filed Request for Recalculation of Patent Term Adjustment in view of Wyeth, the USPTO improperly measured the reduction period for reductions under 37 CFR 1.704(c)(10). Pursuant to 37 CFR 1.704(c)(10), patentee's reduction begins on the date of filing the amendment under 37 CFR 1.312 ("1.312 amendment") or other related paper and ends on the date that the Office mails a response to the filing of the 1.312 amendment or other paper. It has been discovered that during the recalculation, the calculation failed to the limit the reduction to the mail date of the response to the 1.312 amendment or other paper. Accordingly, patentee's reductions were greater than warranted.

This notice **VACATES** the previous GRANTED request for recalculation and provides patentee with a revised GRANTED recalculation.

The patent term adjustment has been determined to be **970** days. The USPTO will *sua sponte* issue a certificate of correction reflecting the amount of patent term adjustment (PTA) days determined by the recalculation.

Prior to the issuance of the certificate of correction, the USPTO will afford patentee an opportunity to be heard and request reconsideration. Accordingly, patentee has **one month or thirty (30) days** from the mail date of this notice, whichever is longer, to file a request for reconsideration of this PTA calculation. See 35 U.S.C. § 154(b)(3)(B)(ii) and 37 CFR 1.322(a)(4).

Patentee should use document code PET.OP if electronically filing a request for reconsideration of this PTA calculation. The patentee must also include the information required by 37 CFR 1.705(b)(2), and the fee required by 37 CFR 1.18(e). If patentee does not file a timely request for reconsideration of this PTA calculation, including the information required by 37 CFR 1.705(b)(2) and the fee required by 37 CFR 1.18(e), the USPTO will issue a certificate of correction reflecting the PTA determination noted above.

Patentee should be aware that in order to preserve the right of review of the USPTO's PTA determination in the United States District Court for the District of Columbia, patentee must ensure that the steps required under 35 U.S.C. § 154 (b)(4) are taken in a timely manner. Nothing in the request for recalculation should be construed as providing an alternative time frame for commencing a civil action under 35 U.S.C. § 154(b)(4).

UNITED STATES PATENT AND TRADEMARK OFFICE

Commissioner for Patents
United States Patent and Trademark Office
P.O. Box 1450
Alexandria, VA 22313-1450
www.uspto.gov

TOWNSEND AND TOWNSEND AND CREW, LLP
TWO EMBARCADERO CENTER
EIGHTH FLOOR
SAN FRANCISCO CA 94111-3834

COPY MAILED

MAY 0 4 2006

OFFICE OF PETITIONS

In re Application of	:	
Patel et al.	:	DECISION ON PETITION
Application No. 09/774,439	:	TO WITHDRAW
Filed: January 31, 2001	:	FROM RECORD
Attorney Docket No. 017887-005500US	:	

This is a decision on the Request to Withdraw as attorney or agent of record under 37 C.F.R.§ 1.36(b), filed August 29, 2005.

The request is **APPROVED**.

A grantable request to withdraw as attorney/agent of record must be signed by every attorney/agent seeking to withdraw or contain a clear indication that one attorney is signing on behalf of another/others. A request to withdraw will not be approved unless at least 30 (thirty) days would remain between the date of approval and the later of the expiration date of a time to file a response or the expiration date of the maximum time period which can be extended under 37 C.F.R. § 1.136(a).

The request was signed by Philip H. Albert on behalf of all attorneys of record who are associated with Customer Number 20350.

All attorneys/agents associated with Customer Number 20350 have been withdrawn. Applicants are reminded that there is no attorney of record at this time.

The request to change the correspondence of record is not acceptable as the requested correspondence address is not that of: (1) the first named inventor; or (2) the assignee of the entire interest. All future communications from the Office will continue to be directed to the first named inventor at the below address until otherwise properly notified by the applicant.

Telephone inquires concerning this decision should be directed to Petitions Examiner Liana Chase at (571) 272-3206. All other inquires concerning either the examination or status of the application should be directed to the Technology Center.

David Bucci
Petitions Examiner
Office of Petitions

Cc:

ASHVINKUMAR PATEL
27765 LUPINE ROAD
LOS ALTOS HILLS, CA 94022

MORRISON & FOERSTER LLP
425 MARKET STREET
SAN FRANCISCO CA 94105-2482

UNITED STATES PATENT AND TRADEMARK OFFICE

Commissioner for Patents
United States Patent and Trademark Office
P.O. Box 1450
Alexandria, VA 22313-1450
www.uspto.gov

MILLER PATENT SERVICES
2500 DOCKERY LANE
RALEIGH, NC 27606

COPY MAILED

DEC 19 2005

OFFICE OF PETITIONS

In re Application of :
Zustack, et al. :
Application No. 09/774,458 :
Filed: January 31, 2001 :
Attorney Docket No. SNY-P4143 :

DECISION GRANTING PETITION

This is a decision on the petition under 37 CFR 1.47(a) filed July 18, 2005. The petition will be treated under 37 CFR 1.182.

The petition is **granted**.

The above-cited application was filed on January 31, 2001, with a declaration under 37 CFR 1.63 executed by all named inventors. On November 21, 2005, the instant petition was filed wherein it is alleged that, after a diligent effort, inventor Yang cannot be located to execute the declaration under 37 CFR 1.131. Petitioner, therefore, requests status for the above-cited application under 37 CFR 1.47(a).

It is noted, that 37 CFR 1.47 is not applicable under the circumstances presented; this provision is only applicable when the inventor(s) refuses or is unavailable to sign the original declaration filed in the application under 37 CFR 1.63. Further to this point, Section 715.04 of the *Manual of Patent Examination Procedure* (MPEP) provides, in pertinent part, that:

> Affidavits or declarations to overcome a rejection of a claim or claims must be made by the inventor or inventor of the subject matter of the rejected claim(s), a party qualified under 37 CFR 1.42, 1.43, or 1.47, of the assignee or other part in interest when it is not possible to produce the affidavit or declaration of the inventor(s). Thus, where all of the named inventors of a pending application are not inventors of every claim of the application, any affidavit under 37 CFR 1.131 could be signed by only the inventor(s) of the subject matter of the rejected claims. Further, where it is shown that a joint inventor is deceased, refuses to sign, or is otherwise unavailable, the signatures of the remaining joint inventors are sufficient.

Based on the aforementioned, status under 37 CFR 1.47 is not necessary in order for the declaration under 37 CFR 1.131 filed without the signatures of all the joint inventors to be accepted. The petition is, therefore, treated under 37 CFR 1.182. As petitioner has established that inventors Yang cannot be located to sign the declaration under 37 CFR 1.131, the declaration under 37 CFR 1.131 filed July 18, 2005, will be accepted.

The fee for the instant petition is $400.00. Deposit account 50-1267 will be charged an additional $200.00, accordingly.

The application file will be directed to Technology Center 2600, GAU 2614 for further processing.

Any inquiries related to this decision should be directed to the undersigned at (571) 272-3222.

Kenya A. McLaughlin

Kenya A. McLaughlin
Petitions Attorney
Office of Petitions

UNITED STATES PATENT AND TRADEMARK OFFICE

Commissioner for Patents
United States Patent and Trademark Office
P.O. Box 1450
Alexandria, VA 22313-1450
www.uspto.gov

MAILED

MAY 06 2008

Technology Center 2100

Timothy T. Patula, Esq.
PATULA & ASSOCIATES, P.C.
116 SOUTH MICHIGAN AVENUE
14TH FLOOR
CHICAGO, IL 60603

In re Application of: Miller, et al. Application No. 09/774,515 Attorney Docket No. 5373/54904 Filed: January 31, 2001 For: INTELLIGENT DOCUMENT LINKING SYSTEM	DECISION ON PETITION FOR SUPERVISORY REVIEW UNDER *37 CFR §1.181*

This is a decision on the petition under 37 CFR § 1.181, filed April 4, 2008, requesting the Commissioner invoke his supervisory authority to force entry of after final amendment filed May 7, 2007.

The petition is **DISMISSED**.

RECENT PROSECUTION HISTORY

(1) On December 1, 2006, a final Office action, rejecting all pending claims, was mailed.

(2) On May 7, 2007, an after-final amendment including remarks as well as a notice of appeal was filed.

(3) On May 24, 2007, an advisory action was mailed.

(4) On November 5, 2007, an appeal brief was filed.

(5) On November 28, 2007, a notification of non-compliant appeal brief was mailed.

(6) On December 31, 2007, an amended appeal brief was filed.

(7) On February 28, 2008, a second notification of non-compliant appeal brief was mailed.

(8) On March 31, 2008, a second amended appeal brief was filed.

(9) On April 4, 2008, the instant petition was filed.

RELIEF REQUESTED

The instant petition filed under 37 CFR 1.181 requests the following relief: 1) entry of the amendment filed on May 7, 2007 or if not enterable 2) identify which portions of the amendment are enterable.

ANALYSIS

In accordance with a petition to the director under 37 CFR § 1.181(f), the following is noted:

> (f) The mere filing of a petition will not stay any period for reply that may be running against the application, nor act as a stay of other proceedings. ***Any petition under this part not filed within two months of the mailing date of the action or notice from which relief is requested may be dismissed as untimely, except as otherwise provided. This two-month period is not extendable.***

With reference to the "recent prosecution history" noted above, Petitioner waited nearly 11 months until the filing of the instant petition after the mailing of the advisory action of May 24, 2007 to request relief under 37 CFR 1.181. Therefore, the petition is considered to be untimely.

In addition, the relevant section of the MPEP concerning entry of amendments after final rejection is MPEP § 714.13 which states:

ENTRY NOT A MATTER OF RIGHT

> ***It should be kept in mind that applicant cannot, as a matter of right, amend any finally rejected claims,*** add new claims after a final rejection (see 37 CFR § 1.116) or reinstate previously canceled claims. ***Except where an amendment merely cancels claims, adopts examiner suggestions, removes issues for appeal, or in some other way requires only a cursory review by the examiner, compliance with the requirement of a showing under 37 CFR 1.116(c) is expected in all amendments after final rejection.***

The proposed after final amendment of May 7, 2007 included proposed cancellation of some claims and extensive amendment of (each of) the independent claims. In accordance with the Examiner's comments on the advisory action mailed May 24, 2007, the proposed amendments to independent claims 1, 6, 11 and 16 filed May 7, 2007 were indicated to raise new issues which would require further search and consideration and would not be entered (thus were not in compliance with 37 CFR § 1.116 and MPEP § 714.13). In addition, in the advisory action mailed May 24, 2007, the examiner proffered at least one specific example wherein the proposed amendment would require further search and consideration. As noted in MPEP § 714.13 set forth above, that Applicant cannot, as a matter of right, amend any finally rejected claims.

Further, a review of the proposed amendment of May 7, 2007 clearly reveals that Applicant was not merely canceling claims, adopting examiner suggestions, removing issues for appeal or in some other way presenting an amendment requiring only a cursory review by the examiner, as required. For example, the proposed amendment to claim 1 on line 5 of the addition of "a

knowledge base storing ..." indicated by Applicant to have been added from dependent claim 2, was originally set forth in claim 2 as "means for storing the knowledge base". This proposed amendment represents ***a change in scope*** of the claim language, and thus a new issue and consideration (for instance, see MPEP 2181). Contrary to Petitioner's assertion on page 3 of the instant petition, the test to determine a new issue or consideration is not whether "the combination of limitations were generally considered in the examination of claims", but rather is compliance with the requirement for an after final submission met with merely a cursory review by the Examiner, as stated in MPEP 714.13.

Finally, in accordance with MPEP 714.13 (III) and in response to Petitioner's remarks on page 4 of the instant petition, if the Examiner is unable to readily identify which portions of the amendment would be acceptable if separately filed, he or she is not obligated to do so. Note the guidance provided to Examiners in MPEP 714.13 (III) suggests "Applicant should be notified, if certain portions of the amendment would be acceptable ...".

Thus, the Examiner's treatment of the proposed after final amendment filed on May 7, 2007, as addressed in the advisory action mailed on May 24, 2007 was proper. For the reasons stated therein and above, the Examiner's refusal to enter the proposed amendments filed after final rejection is correct and consistent with Office policy and current practice.

CONCLUSION

Accordingly, for the above stated reasons, the petition to compel the Examiner to enter the after-final amendment filed May 7, 2007 is **DISMISSED**.

The application is being forwarded to the Examiner for prompt treatment of the second amended appeal brief filed on March 31, 2008.

Any inquiries related to this decision may be directed to Quality Assurance Specialist Brian Johnson at (571) 272-3595.

Donald Sparks, Acting Group Director
Technology Center 2100
Computer Architecture, Software, and Information Security

UNITED STATES PATENT AND TRADEMARK OFFICE

COMMISSIONER FOR PATENTS
UNITED STATES PATENT AND TRADEMARK OFFICE
P.O. BOX 1450
ALEXANDRIA, VA 22313-1450
www.uspto.gov

MAILED

MAY 1 1 2004

Director's Office
Group 3700

CUMMINS, INC.
11 SOUTH MERIDIAN
INDIANAPOLIS, IN 46204

Paper No. 13

In re Application of
WANG ET AL.
Application No.: 09/774,524
Filed: January 31, 2001

DECISION ON PETITION

This is a decision on petitioner's requests filed February 19, 2003 and July 24, 2003, requesting withdrawal of the holding of abandonment of the above-identified application because the applicant did not receive the Office communication mailed on May 31, 2002 at the correspondence address of record.

The petition is granted.

In support of the request, petitioner has provided a showing of non-receipt of the Office action in accordance with Official Gazette Notice 1156 O.G. 53 (November 16, 1993). MPEP 711.03(c) II.

In view of the above, the Notice of Abandonment mailed January 28, 2003 is in error and is hereby vacated. The holding of abandonment is withdrawn.

The Office communication will be remailed with a new shortened statutory period for response, which shall be started to run from the mail date of the newly supplied Office action or notice.

Summary: Holding of Abandonment Withdrawn.

Richard A. Bertsch, Director
Technology Center 3700

SPE R. Pascal
K. Glenn

SPE RESPONSE FOR CERTIFICATE OF CORRECTION

Paper No.: _____

DATE : 4/27/06

TO SPE OF : ART UNIT 2817

SUBJECT : Request for Certificate of Correction for Appl. No.: 09/724,534 Patent No.: 7015773

Please respond to this request for a certificate of correction within 7 days.

Please review the requested changes/corrections as shown in the **COCIN** document(s) in the IFW application image. No new matter should be introduced, nor should the scope or meaning of the claims be changed.

Please complete the response (see below) and forward the completed response to scanning using document code **COCX**.

Lamonte M. Newsome
Certificates of Correction Branch
703-308-9390 ext. 112

Thank You For Your Assistance

The request for issuing the above-identified correction(s) is hereby:
Note your decision on the appropriate box.

- ☒ **Approved** — All changes apply.
- ☐ **Approved in Part** — Specify below which changes **do not** apply.
- ☐ **Denied** — State the reasons for denial below.

Comments: _____

SPE

2817
Art Unit

UNITED STATES PATENT AND TRADEMARK OFFICE

Commissioner for Patents
United States Patent and Trademark Office
P.O. Box 1450
Alexandria, VA 22313-1450
www.uspto.gov

Copy only

Paper No.

HAMILTON, BROOK, SMITH & REYNOLDS, P.C.
530 VIRGINIA ROAD
P.O. BOX 9133
CONCORD MA 01742-9133

COPY MAILED

APR 3 0 2004

OFFICE OF PETITIONS

ON PETITION

In re Application of :
Bing Chiang et al :
Application No. 09/774,534 :
Filed: January 31, 2001 :
Attorney Docket No. 2479.2028-000 :

This is a decision on the petition, filed April 29, 2004, under 37 CFR 1.313(c)(2) to withdraw the above-identified application from issue after payment of the issue fee.

The petition is **GRANTED.**

The above-identified application is withdrawn from issue for consideration of a submission under 37 CFR 1.114 (request for continued examination). See 37 CFR 1.313(c)(2).

Petitioner is advised that the issue fee paid on March 1, 2004 in the above-identified application cannot be refunded. If, however, the above-identified application is again allowed, petitioner may request that it be applied towards the issue fee required by the new Notice of Allowance.[1]

Telephone inquiries should be directed to the undersigned at (703) 305-8859.

After receipt of the file in the Office of Petitions, the application will be forwarded to Technology Center AU 2817 for processing of the request for continued examination under 37 CFR 1.114.

Karen Creasy

Karen Creasy
Petitions Examiner
Office of Petitions
Office of the Deputy Commissioner
for Patent Examination Policy

---

[1] The request to apply the issue fee to the new Notice may be satisfied by completing and returning the new Issue Fee Transmittal Form PTOL-85(b), which includes the following language thereon: "Commissioner for Patents is requested to apply the Issue Fee and Publication Fee (if any) or re-apply any previously paid issue fee to the application identified above." Petitioner is advised that, whether a fee is indicated as being due or not, the Issue Fee Transmittal Form **must** be completed and timely submitted to avoid abandonment. Note the language in bold text on the first page of the Notice of Allowance and Fee(s) Due (PTOL-85).

UNITED STATES PATENT AND TRADEMARK OFFICE

Commissioner for Patents
United States Patent and Trademark Office
P.O. Box 1450
Alexandria, VA 22313-1450
www.uspto.gov

WARE FRESSOLA VAN DER SLUYS &
ADOLPHSON, LLP
BRADFORD GREEN BUILDING 5
755 MAIN STREET, P O BOX 224
MONROE CT 06468

COPY MAILED

JAN 1 3 2005

OFFICE OF PETITIONS

In re Application of	:	
Abrahams et al.	:	
Application No. 09/774,538	:	DECISION GRANTING PETITION
Filed: January 31, 2001	:	UNDER 37 CFR 1.137(b)
Attorney Docket No. 2-591.5	:	

This is a decision on the petition, filed January 6, 2005, which is being treated as a petition under 37 CFR 1.137(b) to revive the instant non-provisional application for failure to timely notify the U.S. Patent and Trademark (USPTO) of the filing of an application in a foreign country, or under a multinational treaty that requires publication of applications eighteen months after filing. *See* 37 CFR 1.137(f).

The petition is **GRANTED**.

Petitioner states that the instant nonprovisional application is the subject of an application filed in an eighteen-month publication country on January 31, 2002. However, the USPTO was unintentionally not notified of this filing within 45 days subsequent to the filing of the subject application in an eighteen-month publication country.

In view of the above, this application became abandoned pursuant to 35 U.S.C. § 122(b)(2)(B)(iii) and 37 CFR 1.213(c) for failure to timely notify the Office of the filing of an application in a foreign country or under a multilateral international agreement that requires publication of applications 18 months after filing.

A petition to revive an application abandoned pursuant to 35 U.S.C. 122(b)(2)(B)(iii) for failure to notify the USPTO of a foreign filing must be accompanied by:

(1) the required reply which is met by the notification of such filing in a foreign country or under a multinational treaty;
(2) the petition fee as set forth in 37 CFR 1.17(m); and
(3) a statement that the entire delay in filing the required reply from the due date of the reply until the filing of a grantable petition was unintentional.

The instant petition has been found to be in compliance with 37 CFR 1.137(b). Accordingly, the failure to timely notify the USPTO of a foreign or international filing within 45 days after the date of filing of such foreign or international application as provided by 35 U.S.C. § 122(b)(2)(B)(iii) and 37 CFR 1.213(c) is accepted as having been unintentionally delayed.

The previous Request and Certification under 35 U.S.C. § 122(b)(2)(B)(i) has been rescinded. A Notice Regarding Rescission of Nonpublication Request which sets forth the projected publication date of April 21, 2005 accompanies this decision on petition.

A review of USPTO financial records indicates that the petition fee was inadvertently collected twice. Accordingly, $750.00 will be credited to petitioner's deposit account.

This matter is being referred to Technology Center Art Unit 3623 for examination in due course.

Telephone inquiries concerning this decision should be directed to the undersigned at (571) 272-3206.

Liana Chase
Petitions Examiner
Office of Petitions
Office of the Deputy Commissioner
for Patent Examination Policy

ATTACHMENT: Notice Regarding Rescission of Nonpublication Request

UNITED STATES PATENT AND TRADEMARK OFFICE

Commissioner for Patents
United States Patent and Trademark Office
P.O. Box 1450
Alexandria, VA 22313-1450
www.uspto.gov

HAMILTON, BROOK, SMITH & REYNOLDS, P.C.
530 VIRGINIA ROAD
P.O. BOX 9133
CONCORD, MA 01742-9133

COPY MAILED
JAN 16 2007
OFFICE OF PETITIONS

In re Application of	:	
BROOKS, et al.	:	
Application No. 09/774,545	:	DECISION ON PETITION
Filed: January 31, 2001	:	TO WITHDRAW
Attorney Docket No. TAN-2-1472.01.US	:	FROM RECORD
	:	

This is a decision on the Request to Withdraw as attorney or agent of record under 37 C.F.R. § 1.36(b), filed November 22, 2006.

The request is **NOT APPROVED** as moot.

A review of the file record indicates that the power of attorney to David J. Thibodeau, Jr. of HAMILTON BROOK SMITH & REYNOLDS, PC has been revoked by the assignee of the patent application on January 4, 2007. Accordingly, the request to withdraw under 37 C.F.R. § 1.36(b) is moot.

All future communications from the Office will continue to be directed to the below-listed address until otherwise notified by applicant.

Telephone inquires concerning this decision should be directed to the undersigned at 571-272-7253.

Monica A. Graves
Petitions Examiner
Office of Petitions

cc: **VOLPE AND KOEING, PC**
DEPT. ICC
UNITED PLAZA, SUITE 1600
30 SOUTH 17TH STREET
PHILADELPHIA, PA 19103

UNITED STATES PATENT AND TRADEMARK OFFICE

UNITED STATES DEPARTMENT OF COMMERCE
United States Patent and Trademark Office
Address: COMMISSIONER FOR PATENTS
P.O. Box 1450
Alexandria, Virginia 22313-1450
www.uspto.gov

VOLPE AND KOENIG, P.C.
DEPT. ICC
UNITED PLAZA, SUITE 1600
30 SOUTH 17TH STREET
PHILADELPHIA, PA 19103

Mail Date: 04/21/2010

Applicant	: Leslie M. Brooks	: DECISION ON REQUEST FOR
Patent Number	: 7640362	: RECALCULATION of PATENT
Issue Date	: 12/29/2009	: TERM ADJUSTMENT IN VIEW
Appliction No	: 09/774,545	: OF WYETH AND NOTICE OF INTENT TO
Filed	: 01/31/2001	: ISSUE CERTIFICATE OF CORRECTION
		:

The Request for Recalculation is **GRANTED** to the extent indicated.

The patent term adjustment has been determined to be **986** days. The USPTO will *sua sponte* issue a certificate of correction reflecting the amount of PTA days determined by the recalculation.

Prior to the issuance of the certificate of correction, the USPTO will afford patentee an opportunity to be heard and request reconsideration. Accordingly, patentee has **one month or thirty (30) days**, whichever is longer, to file a request for reconsideration of this patent term adjustment calculation. See 35 U.S.C. 154(b)(3)(B)(ii) and 37 CFR 1.322(a)(4). No extensions of time will be granted under 37 CFR 1.136.

Patentee should use document code PET.OP if electronically filing a request for reconsideration of this patent term adjustment calculation. The patentee must also include the information required by 37 CFR 1.705(b)(2) and the fee required by 37 CFR 1.18(e). If patentee does not file a timely request for reconsideration of this patent term adjustment calculation including the information required by 37 CFR 1.705(b)(2) and the fee required by 37 CFR 1.18(e), the USPTO will issue a certificate of correction reflecting the PTA determination noted above.

Patentee should be aware that in order to preserve the right to review in the United States District Court for the District of Columbia of the USPTO patent term adjustment determination, patentee must ensure that he or she also take the steps required under 35 U.S.C. 154(b)(4)(A) in a timely manner. Nothing in the request for recalculation should be construed as providing an alternative time frame for commencing a civil action under 35 U.S.C. 154(b)(4)(A).

Any questions concerning this decision should be directed to the Office of Patent Legal Administration at 571-272-7702.

UNITED STATES PATENT AND TRADEMARK OFFICE

UNITED STATES DEPARTMENT OF COMMERCE
United States Patent and Trademark Office
Address: COMMISSIONER FOR PATENTS
P.O. Box 1450
Alexandria, Virginia 22313-1450
www.uspto.gov

VOLPE AND KOENIG, P.C.
DEPT. ICC
UNITED PLAZA, SUITE 1600
30 SOUTH 17TH STREET
PHILADELPHIA, PA 19103

Mail Date: 05/18/2010

Applicant : Leslie M. Brooks
Patent Number : 7640362
Issue Date : 12/29/2009
Application No : 09/774,545
Filed : 01/31/2001

: NOTICE CONCERNING IMPROPER
: CALCULATION OF PATENT TERM
: ADJUSTMENT BASED UPON USPTO
: IMPROPERLY MEASURING REDUCTION
: PERIOD UNDER 37 CFR 1.704(c)(10).

The United States Patent and Trademark Office (USPTO) discovered that in processing the recent recalculation decisions mailed in response to patentee's filed Request for Recalculation of Patent Term Adjustment in view of Wyeth, the USPTO improperly measured the reduction period for reductions under 37 CFR 1.704(c)(10). Pursuant to 37 CFR 1.704(c)(10), patentee's reduction begins on the date of filing the amendment under 37 CFR 1.312 ("1.312 amendment") or other related paper and ends on the date that the Office mails a response to the filing of the 1.312 amendment or other paper. It has been discovered that during the recalculation, the calculation failed to the limit the reduction to the mail date of the response to the 1.312 amendment or other paper. Accordingly, patentee's reductions were greater than warranted.

This notice **VACATES** the previous GRANTED request for recalculation and provides patentee with a revised GRANTED recalculation.

The patent term adjustment has been determined to be **1015** days. The USPTO will *sua sponte* issue a certificate of correction reflecting the amount of patent term adjustment (PTA) days determined by the recalculation.

Prior to the issuance of the certificate of correction, the USPTO will afford patentee an opportunity to be heard and request reconsideration. Accordingly, patentee has **one month or thirty (30) days** from the mail date of this notice, whichever is longer, to file a request for reconsideration of this PTA calculation. See 35 U.S.C. § 154(b)(3)(B)(ii) and 37 CFR 1.322(a)(4).

Patentee should use document code PET.OP if electronically filing a request for reconsideration of this PTA calculation. The patentee must also include the information required by 37 CFR 1.705(b)(2), and the fee required by 37 CFR 1.18(e). If patentee does not file a timely request for reconsideration of this PTA calculation, including the information required by 37 CFR 1.705(b)(2) and the fee required by 37 CFR 1.18(e), the USPTO will issue a certificate of correction reflecting the PTA determination noted above.

Patentee should be aware that in order to preserve the right of review of the USPTO's PTA determination in the United States District Court for the District of Columbia, patentee must ensure that the steps required under 35 U.S.C. § 154 (b)(4) are taken in a timely manner. Nothing in the request for recalculation should be construed as providing an alternative time frame for commencing a civil action under 35 U.S.C. § 154(b)(4).

UNITED STATES PATENT AND TRADEMARK OFFICE

Commissioner for Patents
United States Patent and Trademark Office
P. O. Box 1450
Alexandria, VA 22313-1450
www. uspto. gov

Paper No. 13

MICHAEL BEST & FRIEDRICH LLP
100 EAST WISCONSIN AVENUE
MILWAUKEE, WI 53202-4108

COPY MAILED
AUG 1 1 2004
OFFICE OF PETITIONS

In re Application of	:	
Mitchell Delong et al	:	
Application No. 09/774,555	:	ON PETITION
Filed: January 31, 2001	:	
Attorney Docket No. 7996	:	

This is a decision on the petition under 37 CFR 1.137(b), filed July 27, 2004, to revive the above-identified application.

The petition is **GRANTED**.

Telephone inquiries concerning this decision should be directed to Irvin Dingle at (703) 306-5684.

The application is being forwarded to Technology Center AU 1616 for further processing.

Irvin Dingle
Petitions Examiner
Office of Petitions
Office of the Deputy Commissioner
for Patent Examination Policy

UNITED STATES
PATENT AND
TRADEMARK OFFICE

UNDER SECRETARY OF COMMERCE FOR INTELLECTUAL PROPERTY
AND DIRECTOR OF THE UNITED STATES PATENT AND TRADEMARK OFFICE
WASHINGTON, D.C. 20231
WWW.USPTO.GOV

CATHERINE U. BROWN
THE PROCTOR & GAMBLE COMPANY
MIAMI VALLEY LABORATORIES
P.O. BOX 538707
CINCINNATI OH 45253-8707

#6

In re Application of	:
Michael Anthony Delong et al	:
Serial No.: 09/774,556	: WITHDRAWAL OF ABANDONMENT
Filed: January 31, 2001	:
Attorney Docket No.: 7999	:

This is in response to applicants' petition under 37 CFR 1.181, filed October 31, 2002, requesting revival of the above-identified application based on non-receipt of an Office action.

A review of the file history shows the examiner mailed an Office action to applicants on March 19, 2002, setting a three month shortened statutory period for reply. Upon failure to receive a reply the application was held abandoned as of September 20, 2002, however a Notice of Abandonment has not yet been mailed to applicants. Applicants state that the Office action was never received and provide statements and docket record evidence of non-receipt in support thereof. In view thereof, the Notice of Abandonment is withdrawn and the application is restored to a pending status with the mailing of this decision.

Applicants' petition is **GRANTED**.

The application will be forwarded to the examiner for remailing of the last Office action.

Should there be any questions regarding this decision, please contact William R. Dixon, Jr., by mail addressed to Director, Technology Center 1600, Washington, D.C. 20231, or by telephone at (703) 308-3824 or by facsimile transmission at (703) 305-7230.

Bruce M. Kisliuk
Director, Technology Center 1600

UNITED STATES PATENT AND TRADEMARK OFFICE

COMMISSIONER FOR PATENTS
UNITED STATES PATENT AND TRADEMARK OFFICE
P.O. BOX 1450
ALEXANDRIA, VA 22313-1450
www.uspto.gov

Paper No. 13

Catherine U. Brown
The Procter & Gamble Company
Miami Valley Laboratories
P.O. Box 538707
Cincinnati, OH 45253-8707

COPY MAILED
APR 07 2004
OFFICE OF PETITIONS

In re Application of :
Delong et al. :
Application No. 09/774,557 :
Filed: January 31, 2001 :
Attorney Docket No. 7998 :

This is a decision in response to the petition under 37 CFR 1.137(b), filed November 13, 2003, to revive the above-identified application.

This Petition is hereby **granted**.

The above-identified application became abandoned for failure to reply in a timely manner to the non-final Office action, mailed March 5, 2003. The Office action set a three (3) month period for reply, and provided for extensions of time under 37 CFR 1.136(a). No reply having been received, the application became abandoned on June 6, 2003. A Notice of Abandonment was mailed on November 6, 2003.

With the instant petition, Petitioner has satisfied the requirements of a grantable petition under 37 CFR 1.137(b). An Amendment in response to the March 5, 2003 Office action is filed with the instant petition. Accordingly, the petition is granted.

This application is being forwarded to Technology Center Art Unit 1616 for processing of the Amendment, filed November 13, 2003, in due course.

Telephone inquiries concerning this matter should be directed to the undersigned at (703) 305-0014.

Derek L. Woods
Petitions Attorney
Office of Petitions

OIPE JC141
APR 17 2001
PATENT & TRADEMARK OFFICE

UNITED STATES PATENT AND TRADEMARK OFFICE

COMMISSIONER FOR PATENTS
UNITED STATES PATENT AND TRADEMARK OFFICE
WASHINGTON, D.C. 20231
www.uspto.gov

APPLICATION NUMBER	FILING/RECEIPT DATE	FIRST NAMED APPLICANT	ATTORNEY DOCKET NUMBER
09/774,639	02/01/2001	Steven M. Ruben	PZ013P1C1

CONFIRMATION NO. 8758

FORMALITIES LETTER

OC000000005916279

22195
HUMAN GENOME SCIENCES INC
9410 KEY WEST AVENUE
ROCKVILLE, MD 20850

Date Mailed: 03/29/2001

NOTICE TO COMPLY WITH REQUIREMENTS FOR PATENT APPLICATIONS CONTAINING NUCLEOTIDE SEQUENCE AND/OR AMINO ACID SEQUENCE DISCLOSURES

Applicant is given TWO MONTHS FROM THE DATE OF THIS NOTICE within which to file the items indicated below to avoid abandonment. Extensions of time may be obtained under the provisions of 37 CFR 1.136(a).

- A copy of the "Sequence Listing" in computer readable form has not been submitted as required by 37 C.F.R. 1.821(e). If the effective filing date is on or after September 8, 2000, see the final rulemaking notice published in the Federal Register at 65 FR 54604 (September 8, 2000) and 1238 OG 145 (September 19, 2000). Applicant must provide an initial computer readable form (CRF) copy of the "Sequence Listing" and a statement that the content of the sequence listing information recorded in computer readable form is identical to the written (on paper or compact disc) sequence listing and, where applicable, includes no new matter, as required by 37 CFR 1.821(e), 1.821(f), 1.821(g), 1.825 (b), or 1.825(d). If applicant desires the sequence listing in the instant application to be identical with that of another application on file in the Patent and Trademark Office, such request in accordance with 37 CFR 1.821(e) may be submitted in lieu of a new CRF.

For questions regarding compliance to these requirements, please contact:

- **For Rules Interpretation, call (703) 308-4216**
- **To Purchase PatentIn Software, call (703) 306-2600**
- **For PatentIn Software Program Help, call (703) 306-4119 or e-mail at patin21help@uspto.gov or patin3help@uspto.gov**

A copy of this notice MUST be returned with the reply.

Customer Service Center
Initial Patent Examination Division (703) 308-1202

PART 2 - COPY TO BE RETURNED WITH RESPONSE

OIPE
APR 1 7 2001
PATENT & TRADEMARK OFFICE

03CO

T

IN THE UNITED STATES PATENT AND TRADEMARK OFFICE

In re: application of: Ruben et al.

Serial No.: 09/774,639 | Group Art Unit: TBA

Filed: February 1, 2001 | Examiner: TBA

For: 90 Human Secreted Proteins | Attorney Docket No.: PZ013P1C1

Response to Notice to Comply

#4

Assistant Commissioner For Patents
Washington, D.C. 20231

Sir:

In response to the Notice to Comply dated March 29, 2001, Applicants herewith submit that this notice was issued erroneously. Applicants filed a Statement under 37 CFR 1.821(e), a copy of which is enclosed, together with the Continuation Application on February 1, 2001 (copy of postcard date-stamped 02/01/01 is attached). Therefore, all requirements regarding the Sequence Listing have been met.

Applicants request that the Projected Publication Date be filled in on the Filing Receipt after receipt of this Response to Notice to Comply.

Applicants believe that no fee is required for this submission. However, should a fee be due, please charge such fee to Deposit Account No. 08-3425.

Respectfully submitted,

Date: April 17, 2001

Kenley K. Hoover Reg. No. (40,302)
Attorney/Agent for Applicants

Human Genome Sciences, Inc.
9410 Key West Avenue
Rockville, Maryland 20850
Telephone: 301-309-8504

UNITED STATES PATENT AND TRADEMARK OFFICE

UNITED STATES DEPARTMENT OF COMMERCE
United States Patent and Trademark Office
Address: COMMISSIONER FOR PATENTS
P.O. Box 1450
Alexandria, Virginia 22313-1450
www.uspto.gov

APPLICATION NO.	FILING DATE	FIRST NAMED INVENTOR	ATTORNEY DOCKET NO.	CONFIRMATION NO.
09/774,682	02/01/2001	Motoshi Asano	SON-2024	3648

23353 7590 05/07/2008
RADER FISHMAN & GRAUER PLLC
LION BUILDING
1233 20TH STREET N.W., SUITE 501
WASHINGTON, DC 20036

EXAMINER
POINVIL, FRANTZY

ART UNIT	PAPER NUMBER
3692	

MAIL DATE	DELIVERY MODE
05/07/2008	PAPER

Please find below and/or attached an Office communication concerning this application or proceeding.

The time period for reply, if any, is set in the attached communication.

UNITED STATES PATENT AND TRADEMARK OFFICE

Commissioner for Patents
United States Patent and Trademark Office
P.O. Box 1450
Alexandria, VA 22313-1450
www.uspto.gov

MAILED
FROM DIRECTORS OFFICE

MAY 06 2008

TECHNOLOGY CENTER 3600

Ronald P. Kannaen
Rader, Fishman & Grauer PLLC
LION BUILDING
1233 20TH STREET N.W., SUITE 501
WASHINGTON DC 20036

In re Application of:	:	**DECISION ON PETITION**
Motoshi Asano et al.	:	**REGARDING REQUEST TO**
Application No.: 09/774,682	:	**WITHDRAW FINALITY**
Filed: February 1, 2001	:	**UNDER 37 CFR 1.181**
Attorney Docket No.: SON-2024	:	
For: ELECTRONIC-MONEY	:	
SETTLEMENT METHOD AND	:	
INFORMATION PROCESSING	:	
APPARATUS THEREFOR	:	

This is in response to the petition filed on January 19, 2007 under 37 CFR 1.181 requesting a Pre-Appeal Conference and a Request for Panel Review of the Final Office action mailed June 19, 2006 as being premature. The Request for review was submitted on October 19, 2006.

A review of the record reveals that since the filing of the petition, a review panel was convened and a decision was mailed on February 1, 2007.

Therefore since the panel has been convened and a decision has been rendered and mailed in the case, Applicant's arguments as to the matter of this petition are considered moot.

Questions concerning this decision should be referred to SPE Kambiz Abdi at (571) 272-6702.

The petition is **DISMISSED as Moot**.

Katherine Matecki
for Wynn Coggins, Director
Patent Technology Center 3600
(571) 272-5250

Ka/snm: 4/25/08

SM